CKD

Pneumatic Cylinders Ⅰ

Standard type | With valve | Space saving structure
Rodless type | Related products

Ver. 9

Ver. 2

Catalog No. CB-029SA-9

Guide to CKD Components General Catalog

CKD offers a wide variety of products
to meet your various needs.
Select the ideal product
according to your application.

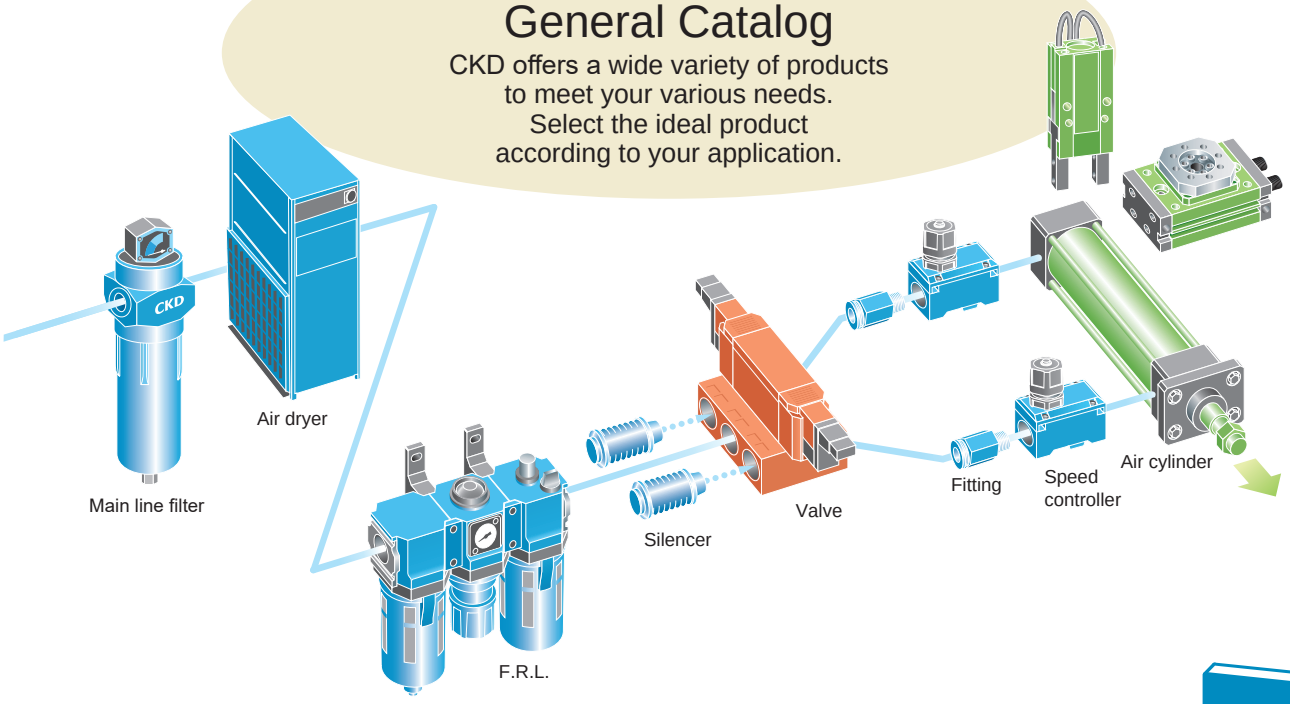

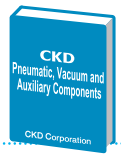

Pneumatic, Vacuum and Auxiliary Components

F.R.L. units
- Modular design (F.R.L.)
- Drain separator
- Anti-bacterial / bacteria-removing filter
- Compact regulator / Filter regulator
- Large bore size filter / Regulator
- Precision regulator
- Mechanical pressure switch
- Residual pressure exhaust valve
- Adapter/joiner
- Pressure gauge
- Vacuum filter / Regulator
- Clean filter / Regulator
- Electro pneumatic regulator

Pneumatic auxiliary components
- Speed controller
- Silencer
- Auxiliary valve
- Fitting/tube
- Air blow nozzle

Air unit components
- Clean air unit
- Air unit

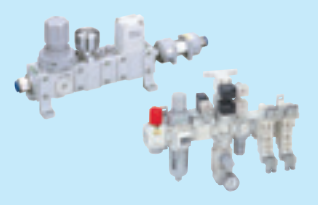

Precision components
- Glass float module
- Precise suction plate
- Magnetic spring buffer

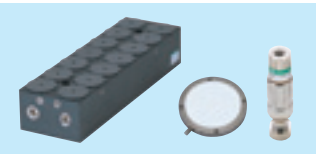

Pressure sensors
- Electronic pressure switch
- Contact/close contact check/ cutting tool breakage detection switch
- Air sensor
- Pressure switch for coolant

Sensor/controller components
- Gas flow sensor
- Gas flow controllers
- Water flow rate sensor

Total air systems
- Total air system (detector/circuit device)
- γ system (PLC components/ signal control components)

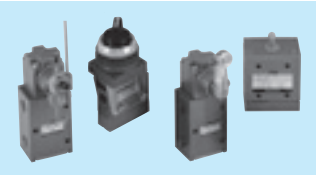

Gas generator
- Nitrogen gas extraction unit
- Oxygen concentration monitor

Main line units
- Air dryer
- High polymer membrane Air dryer unit
- Main line filter
- Drain discharger

● Catalogs for chemical liquids for semiconductors and valves for process gases are also available.

Pneumatic Cylinders I and II

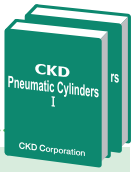

Pneumatic Cylinders I

- Standard
- With valve
- Space saving structure
- Rodless type
- Related products
  - Shock absorber
  - Free joint
  - Simplified floating joint
  - Speed controller
- Cylinder switches

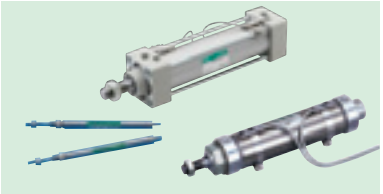
Standard

Space saving structure

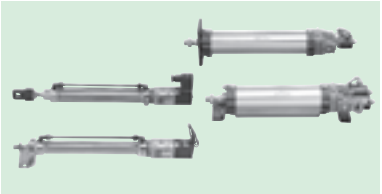
With valve

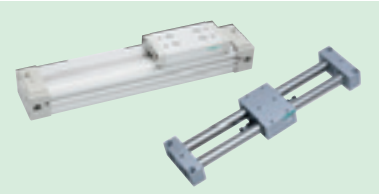
Rodless

Pneumatic Cylinders II

- Combined functions
- Braking and position locking
- High speed
- Special type
- Oscillation/rotation drive
- Modular unit
- Length measuring function
- Hands/chucks
- Related products
  - Shock absorber
  - Free joint
  - Simplified floating joint
  - Speed controller
- Cylinder switches

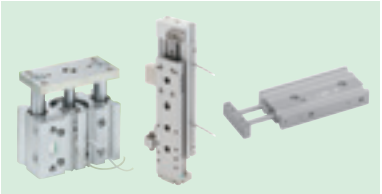
Combined functions

Oscillation/rotation drive

With brake/position locking

Hand/chuck

Pneumatic Valves

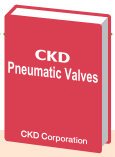

- Pilot operated
- Direct acting
- Explosion-proof
- Manual selector
- Related products

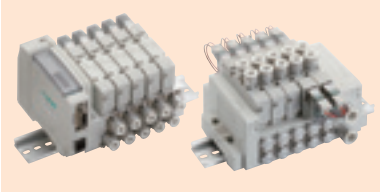
3, 4, 5-port pilot operated valve

Reduced wiring valve

General Purpose Valves

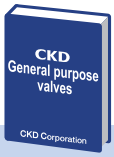

- 2, 3-port solenoid valves for various fluid control
  - Direct acting 2, 3-port solenoid valve
  - Pilot operated 2-port solenoid valve
  - Air driven 2, 3-port valve
  - Motorized ball valve
  - Components for Life Science
  - Related products for water
  - Gas combustion system
  - Automatic watering control device
  - Products for outdoor use
  - Special fluid control valve

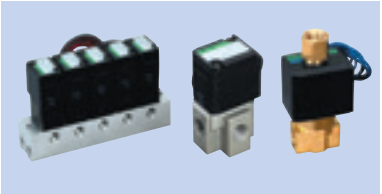
2, 3-port direct acting solenoid valve

2-port air operated valve

Index Units (Index Drive)

- Roller gear cam units
- Parallel cam units
- Pick and place units
- Direct drive actuators
- Drivers/controllers/dedicated terminals

Search
Selection
Caution

Standard: SCP*3, CMK2, CMA2, SCM, SCG, SCA2, SCS2
With valve: CKV2, CAV2/COVP/N2
Space saving structure: SSD2, SSG, SSD, CAT, MDC2, MVC, SMG, MSD/MSDG, FC*, STK
Rodless: SRL3, SRG3, SRM3, SRT3, MRL2, MRG2, SM-25
Related products: Shock absorber, FJ, FK, Speed controller

Ending

INDEX

User's Guide Intro Page 3

1 Search by product name/model No.
Product name Intro Page 1
Model No. index in alphabetic order Ending Page 170

2 Search by product series Intro Page 5
Select from external appearance and product description of each series.
Recommended alternative products Intro Page 19

Guide for CKD Electronic Catalog Intro Page 21

3 Search by bore size Intro Page 23

4 Search by specifications and variation Intro Page 37

System selection Intro Page 49
"Select by cylinder tube bore size and operation speed" or
"Select by load value and operating time"

Safety precautions
- Pneumatic components precautions Intro Page 71
- Pneumatic cylinders general precautions Intro Page 73
- Cylinder switch precautions Intro Page 80

* For cautions for individual products, read the cautions for the corresponding series.

Flow rate characteristics display method	Intro Page 68
Degree of protection	Intro Page 69
● Cylinder switch	Ending Page 1
● Technical data	Ending Page 55
● International System of Units (SI units)	Ending Page 74
● Rod eye/clevis dimension list	Ending Page 75
● Custom-order products	Ending Page 85
Introduction of custom order products	Ending Page 111
Systems/product guide	Ending Page 125
Ozone-proof products	Ending Page 137
JIS symbol list	Ending Page 151
● CE Marking	Ending Page 162
● CKD RoHS Compliance	Ending Page 164
ISO9001/ISO14001 Certification	Ending Page 166
Index (alphabetic order)	Ending Page 170

* Intro/Ending sections are common for Cylinders I and II.

Catalogs and CAD data (2D/3D-CAD) can be downloaded from the CKD website.
https://www.ckd.co.jp/kiki/en/

Standard

p.1

With valve

p.673

Space saving structure

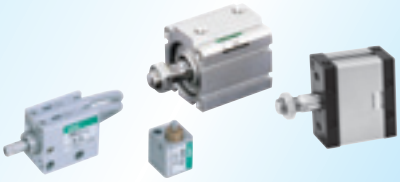

p.743

Rodless

p.1567

Related products

p.1807

Product group	Product name	Model No.	Page
Standard	Pencil shaped cylinder	SCP*3	3
	Medium bore size cylinder	CMK2	81
	Medium bore size cylinder	CMA2	205
	Round shaped cylinder	SCM	227
	Tie rod cylinder	SCG	351
	Medium bore size cylinder	SCA2	443
	Large bore size cylinder	SCS2	621
With valve	Small cylinder with valve	CKV2	675
	Cylinder with valve	CAV2/COV$^{P}_{N}$2	703
Space saving structure	Compact cylinder	SSD2	745
	Guided super compact cylinder	SSG	1065
	Compact cylinder	SSD	1081
	Cartridge cylinder	CAT	1339
	Small direct mounting cylinder	MDC2	1345
	Small cylinder with suction pad	MVC	1371
	Compact cylinder	SMG	1383
	Small compact cylinder	MSD/MSDG	1415
	Flat compact cylinder	FC*	1473
	Stopper cylinder	STK	1509
Rodless	Rodless cylinder	SRL3	1569
	High precision guided rodless cylinder	SRG3	1645
	High precision guided rodless cylinder	SRM3	1673
	Rodless cylinder with brake	SRT3	1703
	Rodless cylinder with magnet	MRL2	1731
	Rodless cylinder with magnet with high precision guide	MRG2	1763
	Shuttle mover	SM-25	1783
Related products	Shock absorber	SKL/NCK/SCK/FCK	1809
	Floating fitting	FJ	1863
	Simplified floating fitting	FK	1873
	Speed controller		1879

User's Guide (How to browse/use the catalog)

Quickly search for and select a desired product using **1** to **4** methods.

1 Search by product name/model No.

If the product name/model No. are already determined, the desired series page can be found.

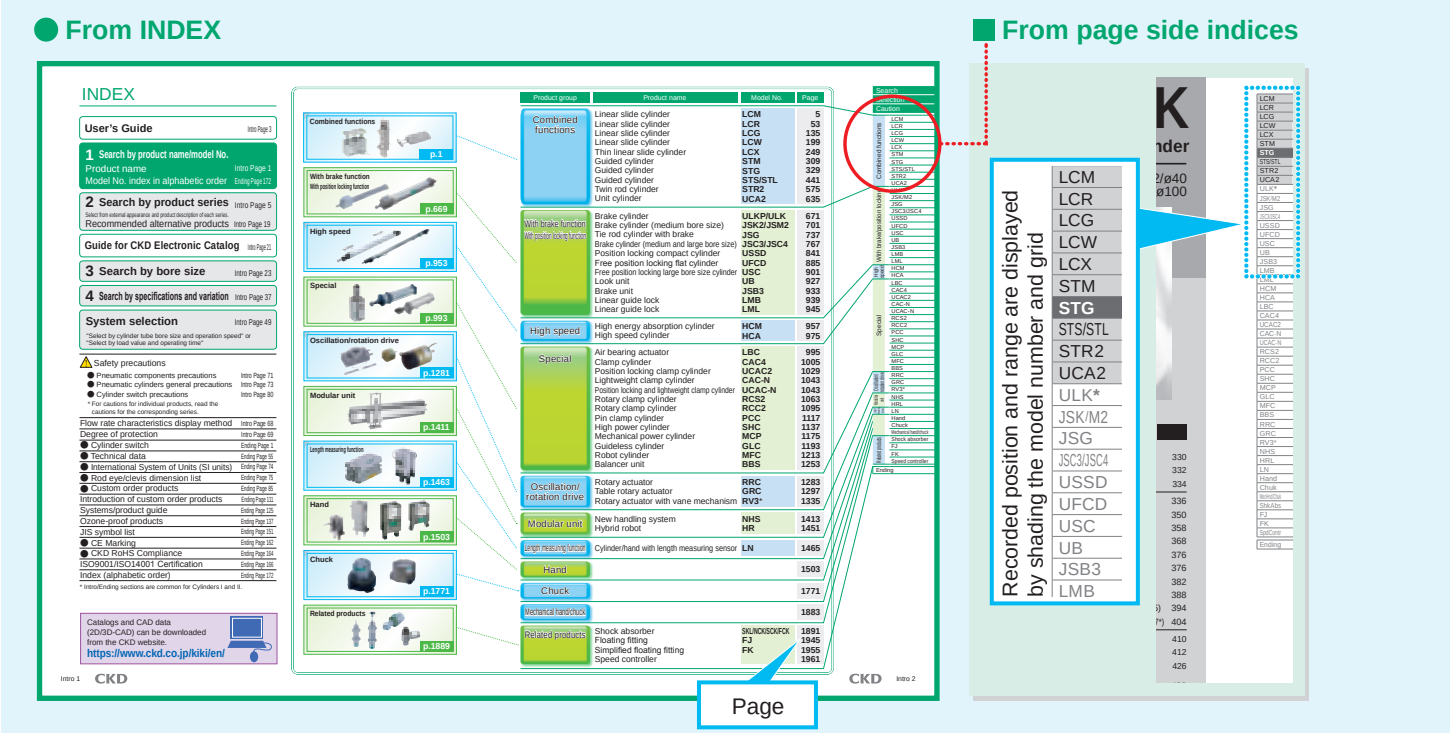

3 Search by bore size

Intro Pages 23 to 36

If bore size is already determined, the desired series page can be found.

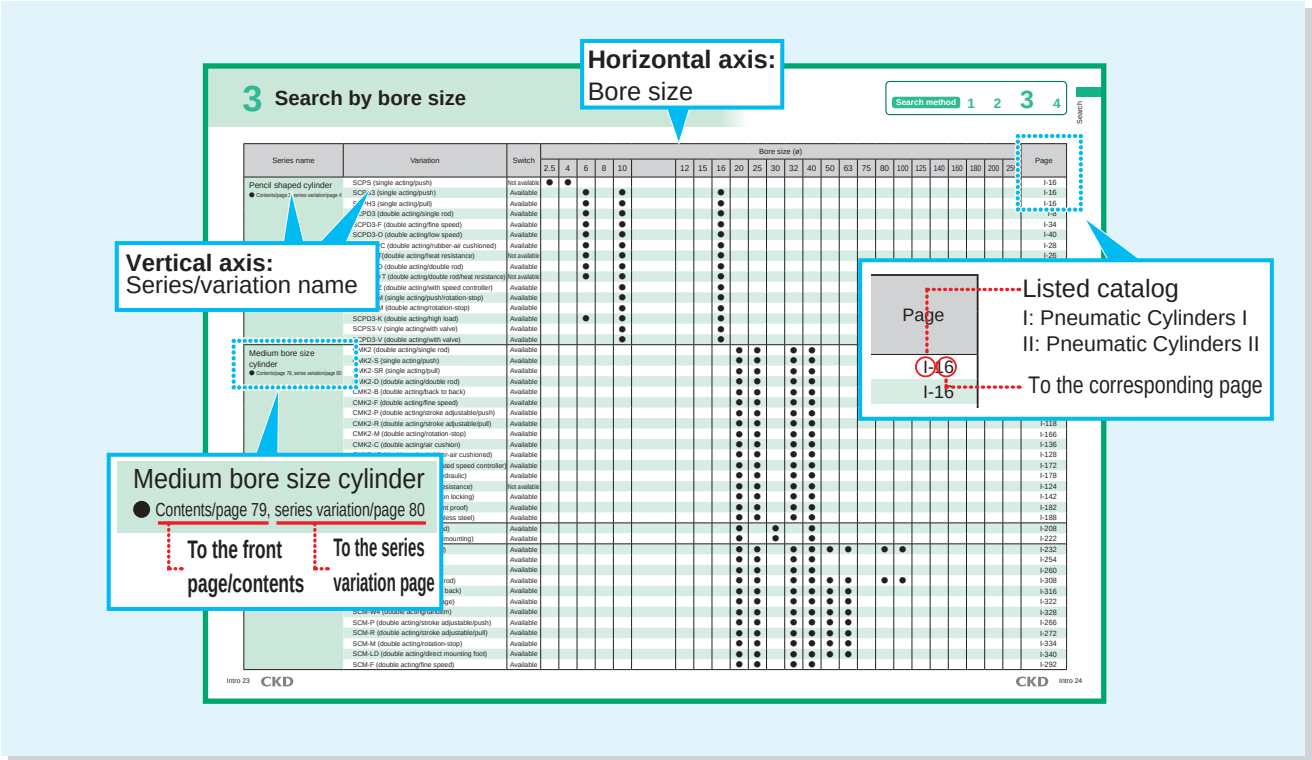

Ending Pages 170 to 197

● In alphabetical order

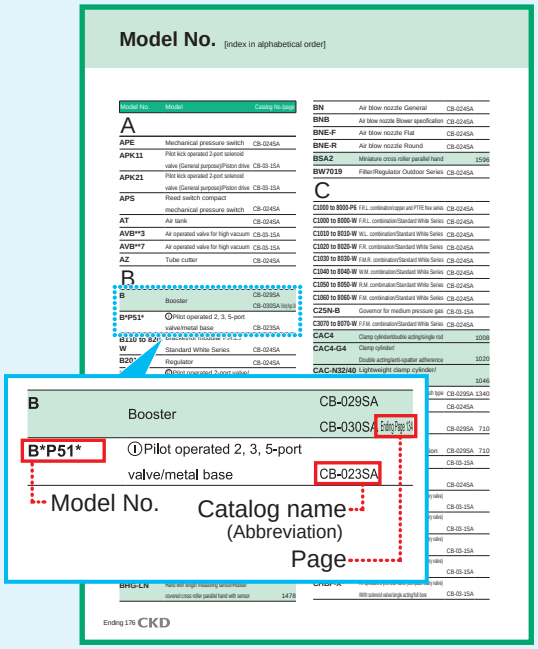

2 Search by product series Intro Page 5

If the product's series name is already determined, the desired series page can be found.

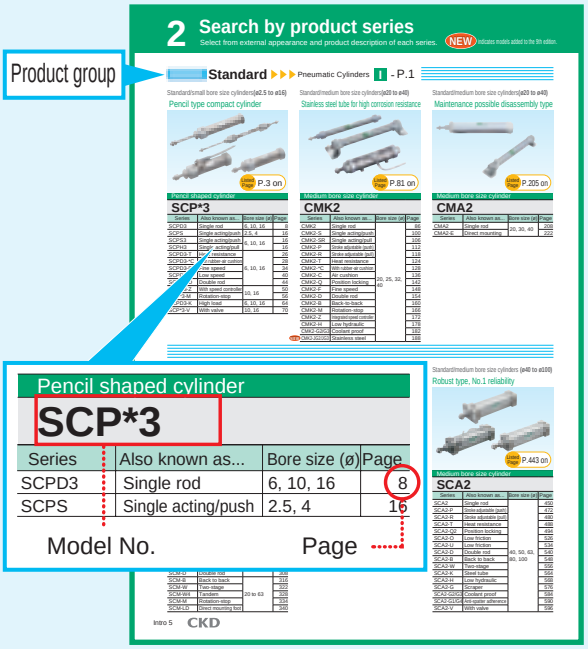

4 Search by specifications and variation Intro Pages 37 to 48

If the variation format is already determined, the desired product can be found.

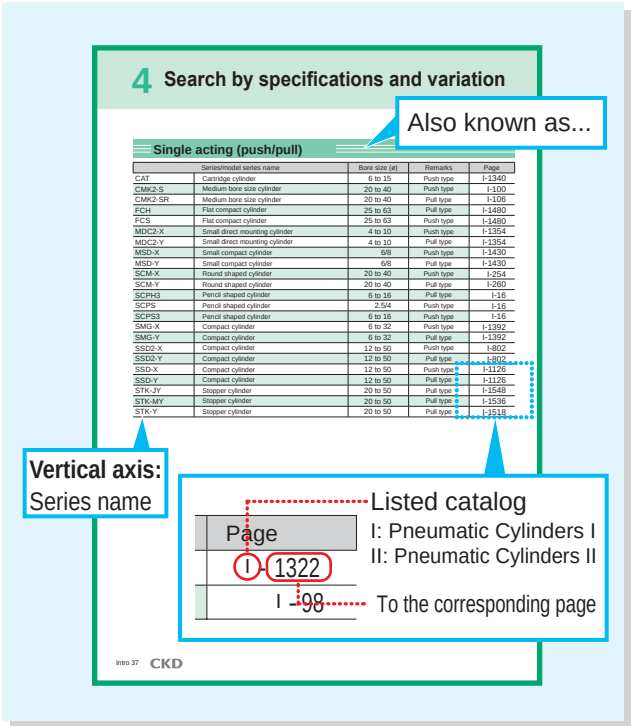

Icons (marks)

For easier use of the catalog, each item is marked and compatible items are indicated in the text.

Mark	Meaning	Details
CAD	CAD data is available for items with CAD marks in dimensions.	Intro Page 1
CE	European Standards compliant products.	Ending Page 164
RoHS	RoHS-compliant products.	Ending Page 166

2 Search by product series

Select from external appearance and product description of each series.

NEW indicates models added to the 9th edition.

Standard ▶▶▶ Pneumatic Cylinders I - P.1

Standard/small bore size cylinders(ø2.5 to ø16)

Pencil type compact cylinder

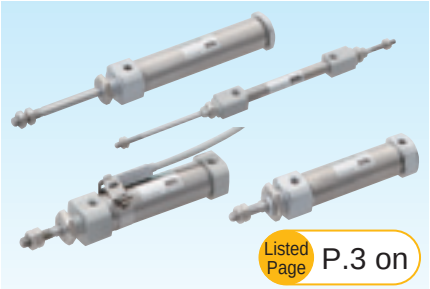

Listed Page P.3 on

Pencil shaped cylinder

SCP*3

Series	Also known as...	Bore size (ø)	Page
SCPD3	Single rod	6, 10, 16	8
SCPS	Single acting/push	2.5, 4	16
SCPS3	Single acting/push	6, 10, 16	16
SCPH3	Single acting/pull		16
SCPD3-T	Heat resistance	6, 10, 16	26
SCPD3-*C	With rubber-air cushion		28
SCPD3-F	Fine speed		34
SCPD3-O	Low speed		40
SCPD3-D	Double rod		44
SCPD3-Z	With speed controller	10, 16	50
SCP*3-M	Rotation-stop		56
SCPD3-K	High load	6, 10, 16	64
SCP*3-V	With valve	10, 16	70

Standard/medium bore size cylinders(ø20 to ø40)

Stainless steel tube for high corrosion resistance

Listed Page P.81 on

Medium bore size cylinder

CMK2

Series	Also known as...	Bore size (ø)	Page
CMK2	Single rod	20, 25, 32, 40	86
CMK2-S	Single acting/push		100
CMK2-SR	Single acting/pull		106
CMK2-P	Stroke adjustable (push)		112
CMK2-R	Stroke adjustable (pull)		118
CMK2-T	Heat resistance		124
CMK2-*C	With rubber-air cushion		128
CMK2-C	Air cushion		136
CMK2-Q	Position locking		142
CMK2-F	Fine speed		148
CMK2-D	Double rod		154
CMK2-B	Back-to-back		160
CMK2-M	Rotation-stop		166
CMK2-Z	Integrated speed controller		172
CMK2-H	Low hydraulic		178
CMK2-G2/G3	Coolant proof		182
NEW CMK2-JG2/JG3	Stainless steel		188

Standard/medium bore size cylinders(ø20 to ø40)

Maintenance possible disassembly type

Listed Page P.205 on

Medium bore size cylinder

CMA2

Series	Also known as...	Bore size (ø)	Page
CMA2	Single rod	20, 30, 40	208
CMA2-E	Direct mounting		222

Standard/medium bore size cylinders(ø20 to ø100)

Smart type with wide range of bore sizes/options

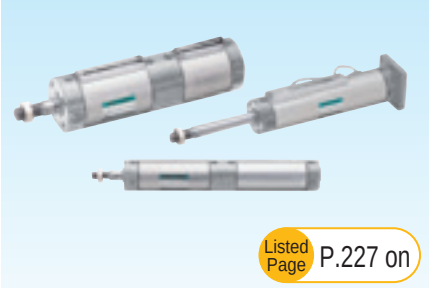

Listed Page P.227 on

Round shaped cylinder

SCM

Series	Also known as...	Bore size (ø)	Page
SCM	Single rod	20 to 100	232
SCM-X	Single acting/push	20 to 40	254
SCM-Y	Single acting/pull		260
SCM-P	Stroke adjustable (push)	20 to 63	266
SCM-R	Stroke adjustable (pull)		272
SCM-T	Heat resistance	20 to 100	278
SCM-Q	Position locking		282
SCM-F	Fine speed	20 to 40	292
SCM-O	Low speed	20 to 100	298
SCM-U	Low friction		302
SCM-D	Double rod		308
SCM-B	Back to back	20 to 63	316
SCM-W	Two-stage		322
SCM-W4	Tandem		328
SCM-M	Rotation-stop		334
SCM-LD	Direct mounting foot		340

Standard/medium bore size cylinders (ø32 to ø100)

Eco-friendly tie rod cylinder

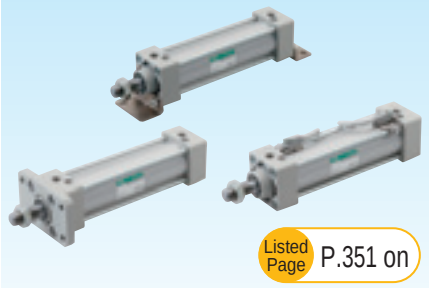

Listed Page P.351 on

Tie rod cylinder

SCG

Series	Also known as...	Bore size (ø)	Page
SCG	Single rod	32 to 100	358
SCG-Q	Position locking		374
SCG-O	Low speed		396
SCG-U	Low friction		402
SCG-D	Double rod		406
SCG-M	Rotation-stop	32 to 63	412
SCG-G	Rubber scraper	32 to 100	418
SCG-G2/G3	Coolant proof	40 to 100	424
SCG-G4	Anti-spatter adherence	32 to 100	430

Standard/medium bore size cylinders (ø40 to ø100)

Robust type, No.1 reliability

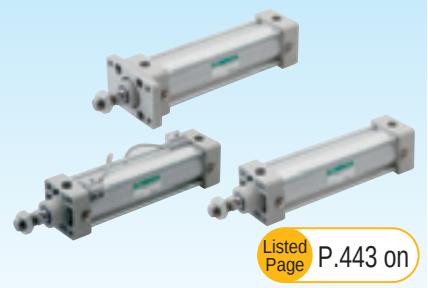

Listed Page P.443 on

Medium bore size cylinder

SCA2

Series	Also known as...	Bore size (ø)	Page
SCA2	Single rod	40, 50, 63, 80, 100	450
SCA2-P	Stroke adjustable (push)		472
SCA2-R	Stroke adjustable (pull)		480
SCA2-T	Heat resistance		488
SCA2-Q2	Position locking		494
SCA2-O	Low friction		526
SCA2-U	Low friction		534
SCA2-D	Double rod		540
SCA2-B	Back to back		548
SCA2-W	Two-stage		556
SCA2-K	Steel tube		564
SCA2-H	Low hydraulic		568
SCA2-G	Scraper		576
SCA2-G2/G3	Coolant proof		584
SCA2-G1/G4	Anti-spatter adherence		590
SCA2-V	With valve		596

Standard/large bore size cylinders **(ø125 to ø250)**

Wide range of choices and high rigidity

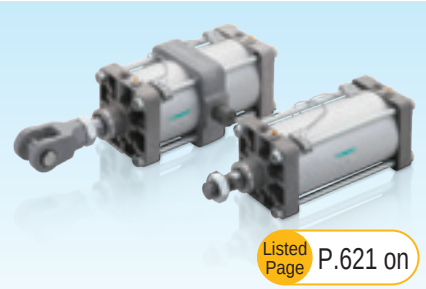

Listed Page P.621 on

Large bore size cylinder

SCS2

Series	Also known as...	Bore size (ø)	Page
SCS2	Lubrication	125, 140, 160, 180, 200, 250	626
SCS2-N	No-lubrication		626
SCS2-P	Stroke adjustable (push)		640
SCS2-T	Heat resistance		644
SCS2-D	Double rod/lubrication		648
SCS2-ND	Double rod/no-lube		648
SCS2-B	Back to back		654
SCS2-W	Two-stage		658
SCS2-H	Low hydraulic		662
SCS2-G	Rubber scraper		668

With valve

Pneumatic Cylinders I - P.673

With valve/medium bore size cylinders **(ø20 to ø40)**

CMK2 Series is equipped with high performance solenoid valve

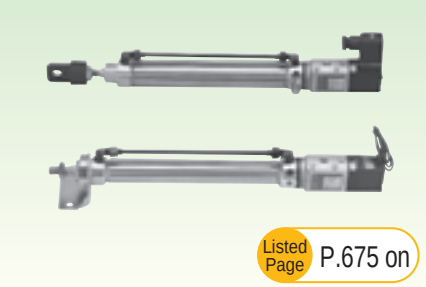

Listed Page P.675 on

Small cylinder with valve

CKV2

Series	Also known as...	Bore size (ø)	Page
CKV2	Single rod	20, 25, 32, 40	680
CKV2-M	Rotation-stop		692

With valve **(ø50/75/100)**

Years of consistent reliability

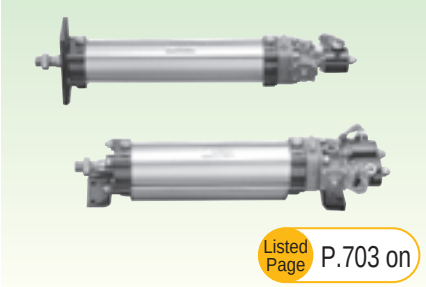

Listed Page P.703 on

Cylinder with valve

CAV2/COV$^{P}_{N}$2

Series	Also known as...	Bore size (ø)	Page
CAV2	Double solenoid/ lubrication	50, 75, 100	710
COVP2	Single solenoid/push out when energized/lubrication		710
COVN2	Single solenoid/retracted in when energized/lubrication		710
CAV2-N	Double solenoid/ no-lubrication		710
COVP2-N	Single solenoid/push out when energized/no-lubrication		710
COVN2-N	Single solenoid/retracted in when energized/no-lubrication		710

Other with valve

The following "Cylinder with valve" product lineup is also available.

Product name	Series	Bore size (ø)	Page
Pencil shaped cylinder	SCPS3-V SCPD3-V	10, 16	I-70
Medium bore size cylinder	SCA2-V	40, 50, 63, 80, 100	I-596
Guided cylinder	ST S/L-M/B V	20 to 63	II-544
Brake cylinder	ULK-V	20, 25, 32, 40	II-680
	JSK2-V	20, 25, 32, 40	II-706
	JSM2-V	20, 25, 32, 40	II-720
	JSG-V	40, 50, 63, 80, 100	II-742
	JSC3-V	40, 50, 63, 80, 100	II-810
Rotary actuator	RV3S V/W RV3D V/W	0.98 to 66.6 (Torque size)	II-1372

2 Search by product series

Select from external appearance and product description of each series.

NEW indicates models added to the 9th edition.

Space saving structure ▶▶▶ Pneumatic Cylinders I - P.743

Space saving/super compact(ø12 to ø200)

Wide variations/switch 4 surface mounting compact

Listed Page P.745 on

Compact cylinder

SSD2

Series	Also known as...	Bore size (ø)	Page
SSD2	Single rod	12 to 200	752
SSD2-K	High load	12 to 100	776
SSD2-L	Long stroke		792
SSD2-X	Push type	12 to 50	802
SSD2-Y	Pull type		802
SSD2-T1	Heat resistance	12 to 100	820
SSD2-T1L	With heat resist cylinder switch	16 to 63	824
SSC2-K-*C	High load/ with rubber-air cushion	20 to 100	832
SSD2-Q	Position locking		840
SSD2-F/SSD2-KF	Fine speed/high load/fine speed	12 to 100	854
SSD2-O	Low speed		858
SSD2-KU	High load/low friction	20 to 100	864
SSD2-D	Double rod	12 to 200	868
SSD2-B	Back to back	12 to 100	890
SSD2-W	Two-stage		902
SSD2-M	Rotation-stop	12 to 63	910
SSD2-DM	Double rod/rotation-stop		924
SSD2-G	Rubber scraper	20 to 100	936
SSD2-G2/G3	Coolant proof	16 to 100	946
SSD2-KG2/KG3	High load/coolant proof		956
SSD2-G1	Coil scraper	25 to 100	966
SSD2-G4	Anti-spatter adherence		966
SSD2-KG1	High load/ coil scraper		974
SSD2-KG4	High load/ anti-spatter adherence		974
SSD2-DG1	Double rod/ coil scraper		984
SSD2-DG4	Double rod/ anti-spatter adherence		984
SSD2-G5	Environment-resistant scraper	20 to 100	992
SSD2-KG5	Hi load/ environment-resist scraper		1002
SSD2-L4	With strong magnetic field proof switch	40 to 100	1012
SSD2-G1L4	With strong magnetic field proof switch/with coil scraper		1018
SSD2-KL4	Hi load/strong magnetic field proof switch		1024
SSD2-KG1L4	Hi load/strong magnetic field proof switch/coil scraper		1030
SSD2-P7*	Clean-room specifications	12 to 160	1036

Space saving/with guide/super compact(ø12 to ø100)

SSD2 Series is equipped with a guide rod

Listed Page P.1065 on

Guided super compact cylinder

SSG

Series	Also known as...	Bore size (ø)	Page
SSG	Single rod	12 to 100	1068

Space saving/compact single acting(ø6 to ø15)

Outside diameter is full-thread thumb size

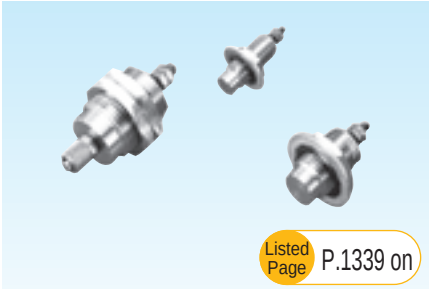

Listed Page P.1339 on

Cartridge cylinder

CAT

Series	Also known as...	Bore size (ø)	Page
CAT	Single acting/push	6, 10, 15	1340

Space saving/super compact (ø12 to ø160)

Compact with wide range of bore sizes/options

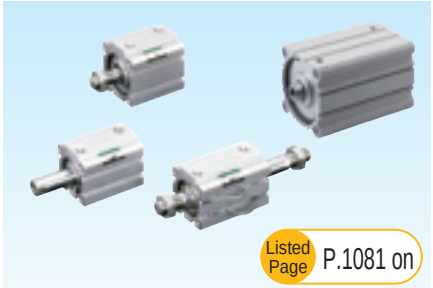

Listed Page P.1081 on

Compact cylinder

SSD

Series	Also known as...	Bore size (ø)	Page
SSD	Single rod	12 to 160	1094
SSD-K	Single rod high load	12 to 100	1116
SSD-X	Single acting/push	12, 16, 20, 25, 32, 40, 50	1126
SSD-Y	Single acting/pull		1126
SSD-T	Heat resistance	12 to 100	1138
SSD-T1L	With heat resist cylinder switch	16 to 63	1142
SSD-K-*C	High load/with rubber-air cushion	32 to 100	1150
SSD-Q	Position locking	16 to 100	1160
SSD-F	Fine speed	12 to 100	1172
SSD-KF	High load/fine speed		1172
SSD-O	Low speed		1178
SSD-KU	High load/low friction	20 to 100	1184
SSD-D	Double rod	12 to 160	1188
SSD-B	Back to back	12 to 100	1200
SSD-W	Two-stage		1210
SSD-M	Rotation-stop	12 to 63	1220
SSD-G2/G3	Coolant proof	16 to 100	1230
SSD-K G2/G3	High load, coolant proof		1238
SSD-G1/G4	Anti-spatter adherence	25 to 100	1246
SSD-K G1/G4	Hi load, anti-spatter adherence		1254
SSD-D G1/G4	Double rod, anti-spatter adherence		1264
SSD-G5	Environment-resistant scraper	20 to 100	1272
SSD-KG5	Hi load/environment-resist scraper	20 to 100	1280
SSD-L4	With strong magnetic field proof switch	40 to 100	1288
SSD-G1L4	With strong magnetic field proof switch/with coil scraper		1294
SSD-KL4	Hi load strong magnetic field proof with switch		1300
SSD-KG1L4	Hi load, strong magnetic field proof switch, coil scraper		1306

Space saving/direct mount (ø4 to ø10)

Can be mounted directly from 4 directions

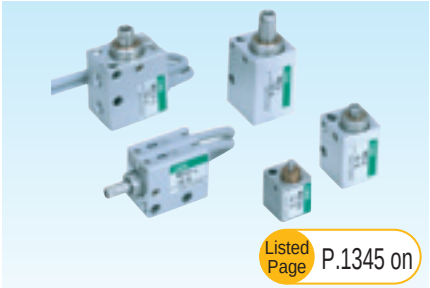

Listed Page P.1345 on

Small direct mounting cylinder

MDC2

Series	Also known as...	Bore size (ø)	Page
MDC2	Single rod	4, 6, 8, 10	1348
MDC2-X	Push type		1354
MDC2-Y	Pull type		1354
MDC2-F	Fine speed		1364

Space saving/with small suction pad**(ø6/ø10)**

Equipped with suction pad on the rod end

Listed Page P.1371 on

Small cylinder with suction pad

MVC

Series	Also known as...	Bore size (ø)	Page
MVC	Single rod	6, 10	1374

Space saving/multisurface installation**(ø6 to ø32)**

More compact than conventional products, direct mount

NEW

Listed Page P.1383 on

Compact cylinder

SMG

Series	Also known as...	Bore size (ø)	Page
SMG	Single rod	6 to 32	1386
SMG-X	Push type		1392
SMG-Y	Pull type		1392
SMG-F	Fine speed		1400
SMG-M	Rotation-stop		1404

Space saving/compact **(ø6 to ø16)**

SSD small bore size series. Also available with high precision guide

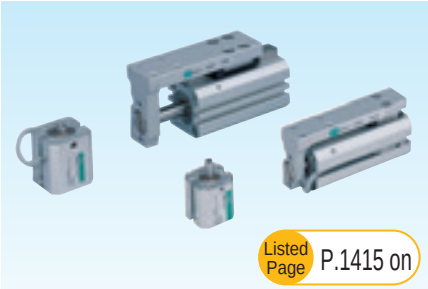

Listed Page P.1415 on

Small compact cylinder

MSD/MSDG

Series	Also known as...	Bore size (ø)	Page
MSD	Single rod	6, 8	1422
MSD-X	Single acting/push		1430
MSD-Y	Single acting/pull		1430
MSD-K	High load	6, 8, 12, 16	1440
MSD-F	Fine speed	6, 8	1450
MSD-KF	High load/fine speed	6, 8, 12, 16	1450
MSDG-L	Guided		1452
MSDG-LF	Guided/fine speed	12, 16	1462

Space saving/flat type **(ø25 to ø63)**

Mountable even in narrow spaces. With rotation-stop function

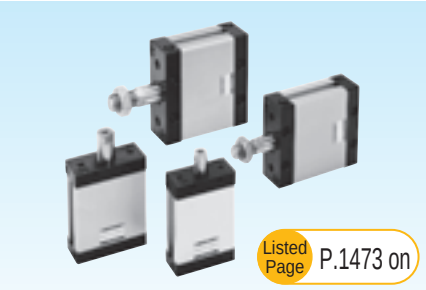

Listed Page P.1473 on

Flat compact cylinder

FC*

Series	Also known as...	Bore size (ø)	Page
FCS	Single acting/push	25, 32, 40, 50, 63 or equiv.	1480
FCH	Single acting/pull		1480
FCD	Single rod		1488
FCD-D	Double rod		1494
FCD-K	Cushioned		1500

Stopper cylinder **(ø20 to 50)**

Space-saving with excellent lateral load resistance

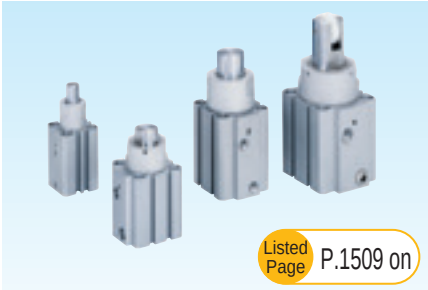

Listed Page P.1509 on

Stopper cylinder

STK

Series	Also known as...	Bore size (ø)	Page
STK	Round rod end form type	20, 32, 40, 50	1512
STK-Y	Single acting/pull/ round rod end form type		1518
STK-Y1	Spring integrated/ round rod end form type		1524
STK-M	Rod end form chamfered type		1530
STK-MY	Single acting/pull/ rod end form chamfered type		1536
STK-MY1	Spring integrated/ rod end form chamfered type		1542
STK-JY	Single acting/pull/ rod end form roller		1548
STK-JY1	Spring integrated/ rod end form roller		1554

2 Search by product series

Select from external appearance and product description of each series.

NEW indicates models added to the 9th edition.

Rodless ▶▶▶ Pneumatic Cylinders I - P.1567

Rodless/basic **(ø12 to ø100)**

Wide range of bore sizes/choices

Listed Page P.1569 on

Rodless cylinder

SRL3

Series	Also known as...	Bore size (ø)	Page
SRL3	Standard	12, 16, 20, 25, 32, 40, 50, 63, 80, 100 or equiv.	1574
SRL3-G	With resin guide		1590
SRL3-Q	With position locking function		1604
SRL3-GQ	With resin guide/ With position locking function		1614

Rodless/with high precision guide **(ø12 to ø25)**

Integrated high precision LM guide

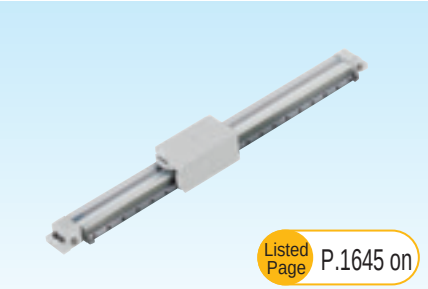

Listed Page P.1645 on

High precision guided rodless cylinder

SRG3

Series	Also known as...	Bore size (ø)	Page
SRG3	Standard	12, 16, 20, 25 or equiv.	1650

Rodless/with high precision guide **(ø25 to ø63)**

2-axis uses high precision LM guide. Improved rigidity

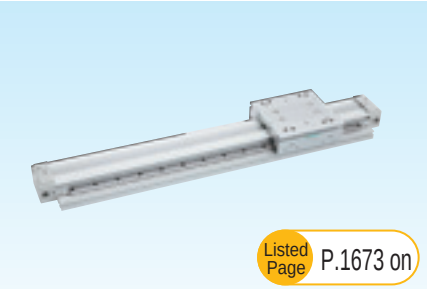

Listed Page P.1673 on

High precision guided rodless cylinder

SRM3

Series	Also known as...	Bore size (ø)	Page
SRM3	Double acting	25, 32, 40, 63 or equiv.	1676
SRM3-Q	Double acting/position locking		1676

Magnet with high precision guide **(ø10 to ø25)**

MRL2 has high precision LM guide integrated

Listed Page P.1763 on

Magnet rodless cylinder with high precision guide

MRG2

Series	Also known as...	Bore size (ø)	Page
MRG2	Double acting	10, 16, 25	1766

Rodless/with brake **(ø12 to ø63)**

Highly reliable built-in brake type

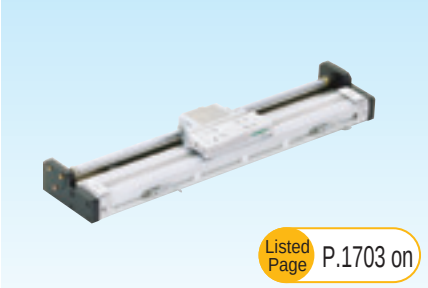

Listed Page P.1703 on

Rodless cylinder with brake

SRT3

Series	Also known as...	Bore size (ø)	Page
SRT3	Double acting	12, 16, 20, 25, 32, 42, 50, 63 or equiv.	1706

Rodless/magnet **(ø6 to ø32)**

Rodless and space-saving

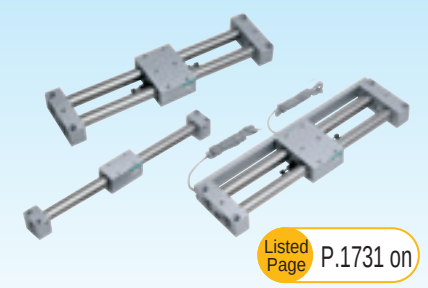

Listed Page P.1731 on

Magnet rodless cylinder

MRL2

Series	Also known as...	Bore size (ø)	Page
MRL2	Basic (guide combined)	6, 10, 16, 20, 25, 32	1740
MRL2-G	Simplified guide/1 piston		1740
MRL2-W	Simplified guide/2 piston		1740
MRL2-F	Fine speed		1740

Rodless/shuttle mover **(ø25)**

Curved rodless. Free layout is possible

Listed Page P.1783 on

Shuttle mover standard/high load

SM-25

Series	Also known as...	Bore size (ø)	Page
SM-25	Standard	25	1784
	High load		

Combined functions

Pneumatic Cylinders II - P.1

Combined functions/with high precision guide **(ø4.5 to ø8)**

Compact with high precision/rigidity

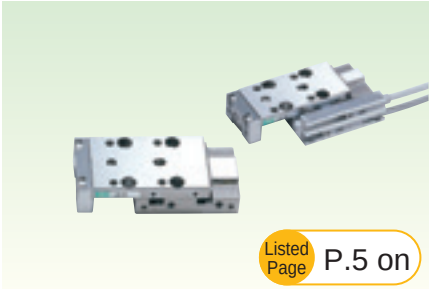

Listed Page P.5 on

Linear slide cylinder

LCM

Series	Also known as...	Bore size (ø)	Page
LCM	Single rod	4.5 to 8	10
LCM-P	Stroke adjustable (push)		18
LCM-R	Stroke adjustable (push/pull)		24
LCM-A	Side installation		30
LCM-P73	Clean-room specifications		40

Combined functions/with high precision guide **(ø6 to ø25)**

Drastically lighter, improved rigidity

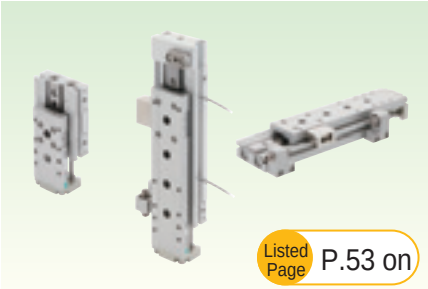

Listed Page P.53 on

Linear slide cylinder

LCR

Series	Also known as...	Bore size (ø)	Page
LCR	Basic	6 to 25	58
LCR-Q	Position locking	8 to 25	84
LCR-P7*	Clean-room specifications	6 to 25	94
LCR-F	Fine speed	12, 16, 20, 25	112
LCR-F-P7*	Fine speed/clean-room specs	12 to 25	118

Combined functions/with high precision guide **(ø6 to ø25)**

Focused on high precision/high rigidity. Easier to use

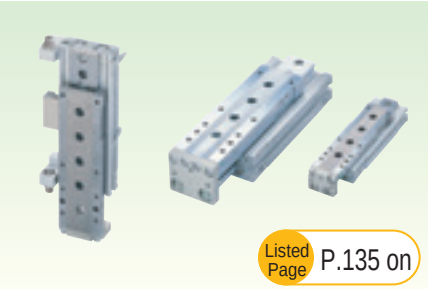

Listed Page P.135 on

Linear slide cylinder

LCG

Series	Also known as...	Bore size (ø)	Page
LCG	Single rod	6 to 25	140
LCG-Q	Position locking	8 to 25	164
LCG-P7*	Clean-room specifications	6 to 25	172

Combined functions/with high precision guide **(ø12 to ø20)**

Specs most used by customers are provided as standard

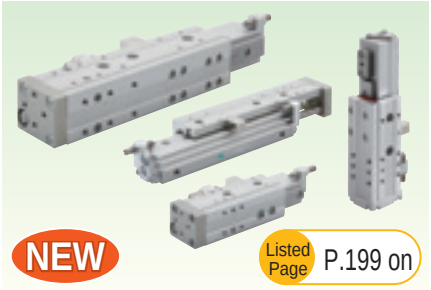

NEW

Listed Page P.199 on

Linear slide cylinder

LCW

Series	Also known as...	Bore size (ø)	Page
LCW	Single rod	12 to 20	204
LCW-Q	Position locking		224

Combined functions/with high precision guide **(ø25, ø32)**

Drastically slimmer, thus ideal for space saving applications

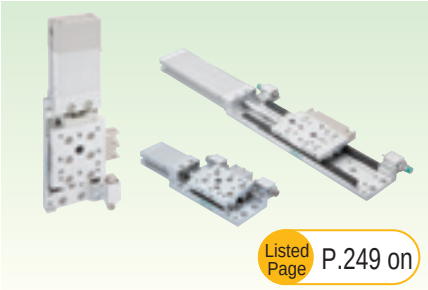

Listed Page P.249 on

Thin linear slide cylinder

LCX

Series	Also known as...	Bore size (ø)	Page
LCX	Single rod	25, 32	254
LCX-Q	Position locking		264
LCX-P7*	Clean-room specifications		270
LCX-*L	Long stroke		276
LCX-Q-*L	Position locking/ long stroke		286
LCX-*L-P7*	Clean-room specifications/ long stroke		292

2 Search by product series

Select from external appearance and product description of each series.

NEW indicates models added to the 9th edition.

Combined functions ▶▶▶ Pneumatic Cylinders II - P.1

Combined functions/guided cylinder **(ø6, ø10)**

Space saving with compact guide

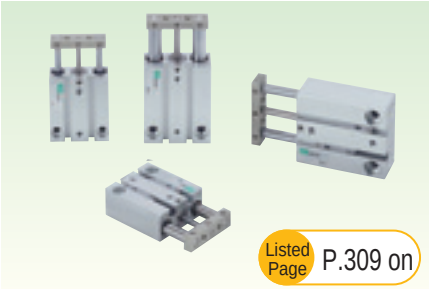

Listed Page P.309 on

Guided cylinder

STM

Series	Also known as...	Bore size (ø)	Page
STM-M/B	Single rod	6, 10	314
STM-B-P7*	Clean-room specifications		320

Combined functions/guided cylinder **(ø12 to ø100)**

Environment-friendly product. Load resistance improved

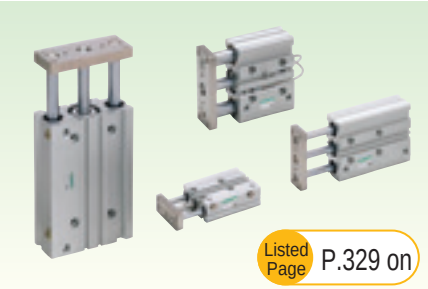

Listed Page P.329 on

Guided cylinder

STG

Series	Also known as...	Bore size (ø)	Page
STG-M/B	Single rod	12 to 100	336
STG-M/B-*C	Rubber-air cushioned	32 to 63	350
STG-M/B C	Air cushion	16 to 63	358
STG-M/B Q	Position locking	20 to 63	368
STG-M/B G	Rubber scraper		376
STG-M/B G1	Coil scraper		376
STG-MG2/MG3	Coolant proof		382
STG-M/B G4	Anti-spatter adherence	40 to 63	388
STG-MG5	Environment-resistant scraper	20 to 100	394
STG-B-P7*	Clean-room specifications	12 to 63	404
STG-K	Heavy duty guide rod	32, 50	430

Combined functions/guided cylinder **(ø8 to ø100)**

Wide range of bore sizes/choices

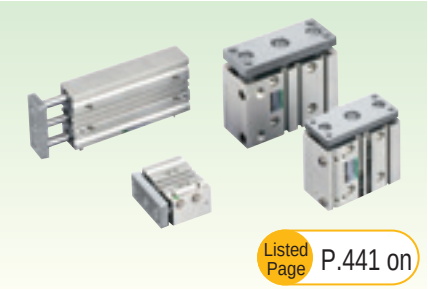

Listed Page P.441 on

Guided cylinder

STS/STL

Series	Also known as...	Bore size (ø)	Page
ST S/L-M/B	Single rod	8 to 100	448
ST S/L-M/B P	Stroke adjustable (push)	8 to 80	470
ST S/L-M/B T	Heat resistance	12 to 80	476
ST S/L-M/B T2	Packing material fluoro rubber		480
ST S/L-M/B-*C	Rubber-air cushioned	32 to 80	486
ST S/L-M/B C	Air cushion	25 to 80	492
ST S/L-M/B Q	Position locking	20 to 80	500
ST S/L-M/B F	Fine speed	8 to 80	512
ST S/L-M/B O	Low speed		514
ST S/L-M/B G	Rubber scraper/	20 to 80	518
ST S/L-M/B G1	Coil scraper		
ST S/L-M/B G 2/3	Coolant proof		526
ST S/L-M/B G4	Anti-spatter adherence	40 to 80	536
ST S/L-M/B V	Valve equipped	20 to 63	544

Combined functions/twin rod cylinder **(ø6 to ø32)**

High non-rotating accuracy with twin rod. For pick & place applications

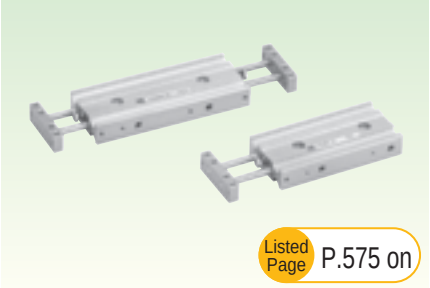

Listed Page P.575 on

Twin rod cylinder

STR2

Series	Also known as...	Bore size (ø)	Page
STR2-M/B	Standard	6, 10, 16, 20, 25, 32	580
STR2-M/B Q	Position locking	16, 20, 25, 32	592
STR2-M/B O	Low speed	6, 10, 16, 20, 25, 32	602
STR2-M/B F	Fine speed	10, 16, 20, 25, 32	610
STR2-M/B D	Double rod	6, 10, 16, 20, 25, 32	612

Combined functions/unit cylinder **(ø10 to ø32)**

Stable position accuracy with double rod structure

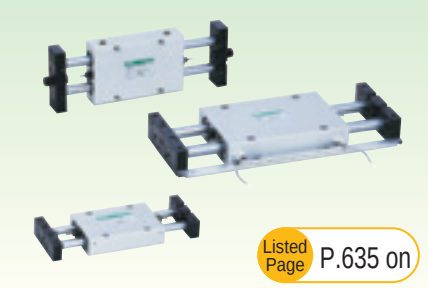

Listed Page P.635 on

Unit cylinder

UCA2

Series	Also known as...	Bore size (ø)	Page
UCA2	Metal bush bearing	10, 16, 25, 32	640
UCA2-B	Ball bearing		650

With brake/position locking

Pneumatic Cylinders II - P.669

With brake/small medium bore size **(ø16 to ø40)**

Pencil type, etc. with high performance compact brake

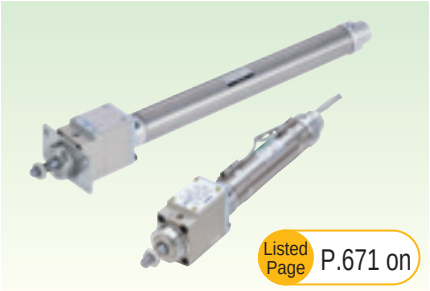

Listed Page P.671 on

Brake cylinder (small/medium bore size)

ULKP/ULK

Series	Also known as...	Bore size (ø)	Page
ULKP	Single rod	16	674
ULK		20, 25, 32, 40	680
ULK-V	With valve	20, 25, 32, 40	680

With brake/small medium bore size **(ø20 to ø40)**

CMK2/CMA2 equipped with highly reliable built-in brake

Listed Page P.701 on

Brake cylinder (small/medium bore size)

JSK2/JSM2

Series	Also known as...	Bore size (ø)	Page
Caulking model			
JSK2	Single rod	20, 25, 32, 40	706
JSK2-V	With valve		706
Disassembly type			
JSM2	Single rod	20, 30, 40	720
JSM2-V	With valve		720

With brake/medium bore size **(ø40 to ø100)**

SCG equipped with highly reliable built-in brake mechanism

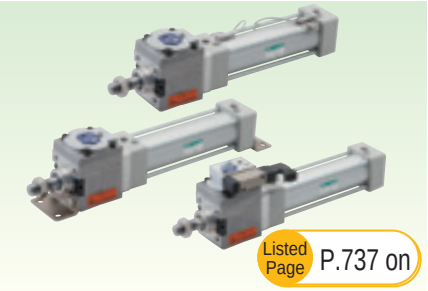

Listed Page P.737 on

Tie rod cylinder with brake

JSG

Series	Also known as...	Bore size (ø)	Page
JSG	Single rod	40, 50 63, 80, 100	742
JSG-V	With valve for brake release		

With brake/medium large bore size **(ø40 to ø180)**

Highly reliable robust cylinders equipped with brake

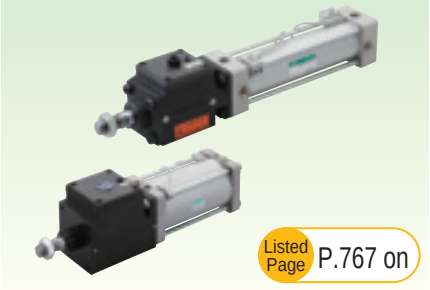

Listed Page P.767 on

Brake cylinder (medium and large bore size)

JSC3/JSC4

Series	Also known as...	Bore size (ø)	Page
JSC3	Single rod	40 to 100	774
JSC4	Single rod	125 to 180	774
JSC3-V	With valve for brake	40 to 100	810
JSC3-H	Low hydraulic	40 to 100	818
JSC4-H	Low hydraulic	125 to 180	818
JSC3-T	Heat resistance	40 to 100	830
JSC4-T	Heat resistance	125 to 180	830

With position locking **(ø20 to ø100)**

Compact SSD equipped with position locking function

Listed Page P.841 on

Position locking compact cylinder

USSD

Series	Also known as...	Bore size (ø)	Page
USSD	Single rod	20, 25, 32, 40, 50, 63, 80, 100	846
USSD-K	High load		846

With position locking **(ø25 to ø63)**

Flat cylinder FCD Series equipped with position locking function

Listed Page P.885 on

Free position locking flat cylinder

UFCD

Series	Also known as...	Bore size (ø)	Page
UFCD-KL	Single rod/ cushioned	25 to 63	888

2 Search by product series

Select from external appearance and product description of each series.

NEW indicates models added to the 9th edition.

With brake/position locking

Pneumatic Cylinders II - P.669

With position locking **(ø40 to ø100)**

Position locking possible at any position

Listed Page P.901 on

Free position locking medium bore size cylinder

USC

Series	Also known as...	Bore size (ø)	Page
USC	Single rod	40 to 100	904
USC-G1	With coil scraper		904

Lightweight. Slim lock unit

"Fixing," "improved safety," and "position locking" are possible

NEW

Listed Page P.927 on

Lock unit

UB

Series	Applicable shaft diameter	Page
UB	8, 16	930

With brake/brake unit

Brake section installed in brake cylinder alone integrated into a unit

Listed Page P.933 on

Brake unit

JSB3

Series	Rod diameter	Page
JSB3	16, 20, 25, 30, 35, 40, 45	936

With brake/LM guide brake

Highly reliable brake mounted to LM guide

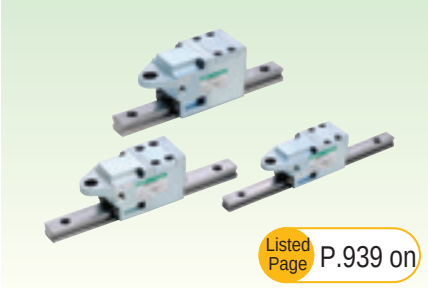

Listed Page P.939 on

Linear guide lock

LMB

Series	Page
LMB	942

With brake function/lock unit

Compact linear guide with strong holding force

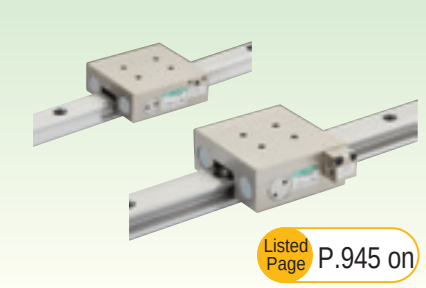

Listed Page P.945 on

Linear guide lock

LML

Series	Page
LML	947

High speed

Pneumatic Cylinders II - P.953

High speed/high speed cylinder**(ø20 to ø63)**

High speed operation at 2000 mm/s. High cushion performance

Listed Page P.957 on

High energy absorption cylinder

HCM

Series	Also known as...	Bore size (ø)	Page
HCM	Single rod	20 to 63	960

High speed/high speed cylinder**(ø20 to ø100)**

High speed operation at 3000 mm/s. High cushion performance

Listed Page P.975 on

High speed cylinder

HCA

Series	Also known as...	Bore size (ø)	Page
HCA	Single rod	20, 25, 32, 40, 50, 63, 80, 100	978

Special

Pneumatic Cylinders II - P.993

Air static pressure soft actuator

"Zero" sliding resistance achieved

Listed Page P.995 on

Air bearing actuator

LBC

Series	Also known as...	Page
LBC	Push type	998

Combined functions/clamp cylinder **(ø40 to ø80)**

Clamp dedicated cylinder

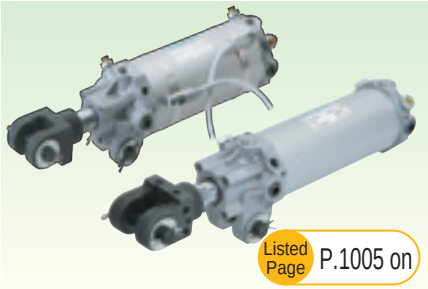

Listed Page P.1005 on

Clamp cylinder

CAC4

Series	Also known as...	Bore size (ø)	Page
CAC4	Single rod	40, 50, 63, 80	1008
CAC4-G4	Anti-spatter adherence	40, 50, 63, 80	1020

With brake/position locking **(ø50/ø63)**

Clamp cylinder equipped with position locking function

Listed Page P.1029 on

Position locking clamp cylinder

UCAC2

Series	Also known as...	Bore size (ø)	Page
UCAC2	Single rod	50, 63	1030

Combined functions/clamp cylinder **(ø32/ø40)**

Clamp dedicated, contributes to reduction of welding jig weight

Listed Page P.1043 on

Lightweight clamp cylinder

CAC-N

Series	Also known as...	Bore size (ø)	Page
CAC-N	Single rod	32, 40	1046

With brake/position locking **(ø32/ø40)**

Equipped with free position locking function

Listed Page P.1043 on

Lightweight clamp cylinder

UCAC-N

Series	Also known as...	Bore size (ø)	Page
UCAC-N	With position locking	32, 40	1052

Rotary clamp **(ø12 to ø63)**

Simple design makes compact clamping a reality

NEW

Listed Page P.1063 on

Rotary clamp cylinder

RCS2

Series	Also known as...	Bore size (ø)	Page
RCS2	Single rod	12 to 63	1068
RCS2-T2	Packing material fluoro rubber		1078
RCS2-G4	Anti-spatter adherence	32 to 63	1084

2 Search by product series

Select from external appearance and product description of each series.

NEW indicates models added to the 9th edition.

Special ▶▶▶ Pneumatic Cylinders II - P.993

Rotary clamp **(ø16 to ø63)**

Optimal for clamping in small spaces

Listed Page P.1095 on

Rotary clamp cylinder

RCC2

Series	Also known as...	Bore size (ø)	Page
RCC2	Single rod	16 to 63	1096
RCC2-G4	Anti-spatter adherence	20 to 63	1108

Pin clamp cylinder

Positioning and clamping of workpiece is possible with a single cylinder

NEW

Listed Page P.1117 on

Pin clamp cylinder

PCC

Series	Also known as...	Bore size (ø)	Page
PCC	Single rod	50	1118
PCC-Q	Position locking		1118

End booster**(ø40 to ø100)**

Booster with end alone. Energy-saving cylinder.

Listed Page P.1137 on

High power cylinder

SHC

Series	Also known as...	Bore size (ø)	Page
SHC	Double force	40 to 100	1144
SHC-K	Quadruple force		1154

Mechanical power cylinder

With just pneumatic source, high thrust equal to hydraulic cylinder is achieved

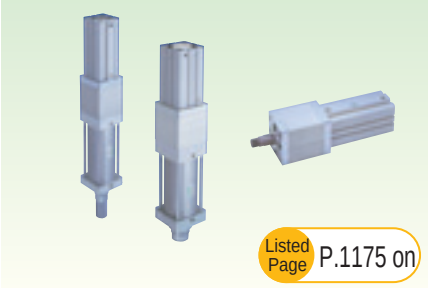

Listed Page P.1175 on

Mechanical power cylinder

MCP

Series	Also known as...	Bore size (ø)	Page
MCP-W	Rapid feed + booster	For 2t/5t	1180
MCP-S	Booster section only		

Combined functions/guideless cylinder **(ø40 to ø100)**

Rotation-stop without guide, excellent lateral load resistance

Listed Page P.1193 on

Guideless cylinder

GLC

Series	Also known as...	Bore size (ø)	Page
GLC	Single rod	40 to 100	1198

Combined functions/robot cylinder **(ø30 to ø80)**

Structure that receives a load with the whole frame

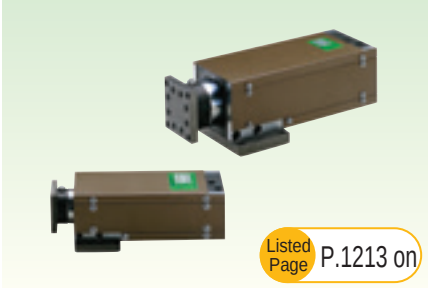

Listed Page P.1213 on

Robot cylinder

MFC

Series	Also known as...	Bore size (ø)	Page
MFC	Single rod	30, 40, 50, 63, 80	1218
MFC-K	High load		1218
MFC-B	With brake		1226
MFC-BK	High load with brake		1226
MFC-BS	With brake sensor		1236
MFC-BSK	High load with brake sensor		1236

Oscillation/rotation drive

Pneumatic Cylinders II - P.1281

Balancer unit **(ø50 to ø100)**

Air source alone easily supports heavy objects

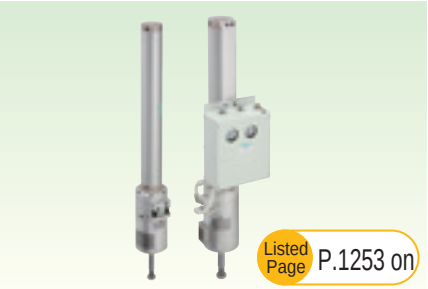

Listed Page P.1253 on

Balancer unit

BBS

Series	Also known as...	Bore size (ø)	Page
BBS-A	Auto pressure adjustment	50 to 100	1258
BBS-O	Fixed pressure adjustment		1270

Oscillation/rotation drive 0.7 to 5.6 N•m

Rack and pinion type and compact oscillation

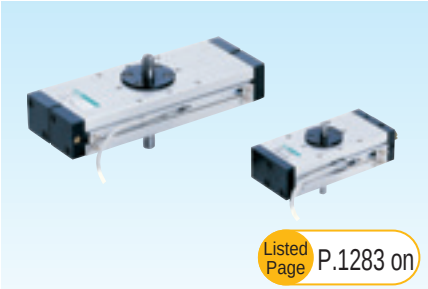

Listed Page P.1283 on

Rotary actuator

RRC

Series	Also known as...	Torque size	Page
RRC	Rack and pinion mechanism	0.7 to 5.6	1286

* Torque size (N·m, at 0.5 MPa)

Oscillation/rotation drive 0.5 to 8.0 N•m

Table actuator. High precision also available

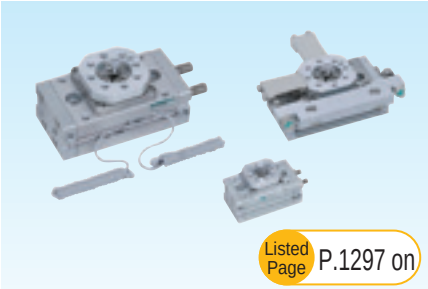

Listed Page P.1297 on

Table rotary actuator

GRC

Series	Also known as...	Torque size	Page
GRC	Basic	0.5 to 8.1	1302
GRC-K	High accuracy	1.0 to 8.1	1302
GRC-F	Fine speed	0.5 to 8.1	1316
GRC-KF	High accuracy/fine speed	1.0 to 8.1	1316

* Torque size (N·m, at 0.5 MPa)

Modular unit

Pneumatic Cylinders II - P.1411

Oscillation/rotation drive 0.12 to 0.66 N•m

Vane type. Wide range of torque sizes.

Listed Page P.1335 on

Rotary actuator with vane mechanism

RV3*

Series	Also known as...	Torque size	Page
Compact			
RV3S	Single vane mechanism	0.12 to 3.19	1338
RV3D	Double vane mechanism	0.28 to 7.70	1338
RV3S V/W	Single vane/with valve	0.98 to 3.19	1350
RV3D V/W	Double vane/with valve	2.11 to 7.70	1350
RV3SA	Angle variable, single vane mech	0.31 to 3.19	1354
RV3DA	Angle variable, double vane mech	0.71 to 7.70	1354
Large			
RV3S (Large)	Single vane mechanism	4.7 to 102	1364
RV3D (Large)	Double vane mechanism	10.1 to 206	1364
RV3S V/W	Single vane/with valve	4.7 to 27.9	1372
RV3D V/W	Double vane/with valve	10.1 to 66.6	1372
RV3SH	Single vane/low hydraulic	4.7 to 102	1378
RV3DH	Double vane/low hydraulic	10.1 to 206	1378
RVC	Shock absorber		1382

* Torque size (N·m, at 0.5 MPa)

Unit components/XYZ-axis combined unit

Selectable X-axis (load capacity), YZ-axis.

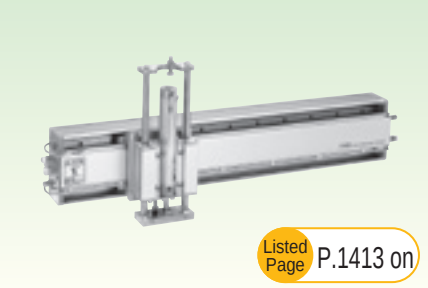

Listed Page P.1413 on

New handling system

NHS

Series	Also known as...	Page
NSR	X-axis module	1422
NHS-H	Z-axis module (HRL)	1430
NHS-S	Z-axis module (STL-B)	1440

Single axis unit

Thin with high rigidity

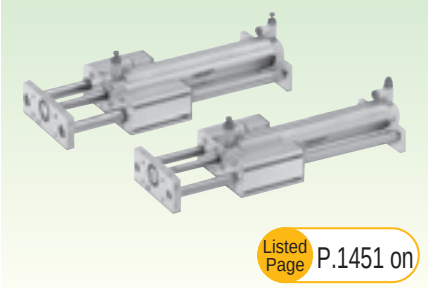

Listed Page P.1451 on

Hybrid robot

HRL

Series	Also known as...	Page
HRL-1	Pneumatic robot element/single-axis unit	1452

2 Search by product series

Select from external appearance and product description of each series. NEW indicates models added to the 9th edition.

Length measurement function

Pneumatic Cylinders II - P.1463

Length measurement function/cylinder/hand

Compact cylinder/hand equipped with length measurement function

Listed Page P.1465 on

Cylinder/hand with length measuring sensor

LN

Series	Also known as...	Bore size (ø)	Page
SSD-LN SSD-O-LN	Cylinder with sensor Compact cylinder type	12 to 50	1474
BHA-LN	Cross roller parallel hand with sensor	12, 16, 20, 25	1478
BHG-LN	Cross roller parallel hand with sensor with rubber cover	12, 16, 20, 25	1478
BHE-LN	Centering hand with sensor	12, 16, 20, 25	1478

Hand/chuck

Pneumatic Cylinders II - Hand: Page 1503 Chuck: Page 1771

Diverse variety is available, including thin, lightweight, and wide types.

Listed Page P.1503 on

Parallel hand

Hand

Series	Also known as...	Bore size (ø)	Page
Parallel hand			
NEW LSH-HP1 LSHL-HP1	Linear Slide Hand (HP Series)	6 to 32	1506
NEW LSHM-HP2	Linear Slide Hand with length measuring function (HP Series)	10 to 25	1508
LSH	Linear Slide Hand (standard)	10 to 25	1581
FH100	Feather hand (Mini-parallel hand)	10 to 25	1590
BSA2	Miniature cross roller parallel hand	6	1596
BHA	Compact cross roller parallel hand	12 to 25	1600
BHG	Compact cross roller parallel hand with rubber cover	12 to 25	1606
LHA	Linear guide hand	6 to 32	1612
LHAG	Linear guide hand with rubber cover	12 to 32	1620
HAP-1C	Parallel hand	15	1628
HAP	Parallel hand	20 to 40	1630
HKP	Cross roller parallel hand	32 to 80	1636
HCP	Lateral parallel hand	12 to 32	1642
HGP	Long stroke parallel hand	25	1648
Thin parallel hand			
NEW HLF2	Long stroke thin hand	8x2 to 20x2	1652
HLA/HLB	Thin parallel hand	12 to 20	1662
HLAG/ HLBG	Thin parallel hand with rubber cover	12 to 20	1670
HLC	Thin long stroke parallel hand	8x2 to 30x2	1678
HLD	Ultra thin parallel hand	8x4 to 20x4	1686
Wide parallel hand			
HMF	Compact wide parallel hand	12x2 to 40x2	1690
NEW HMF-G	Compact wide parallel hand with coolant specifications	16x2 to 25x2	1700
HMFB	Large wide parallel hand with linear guide	25x2 to 40x2	1708

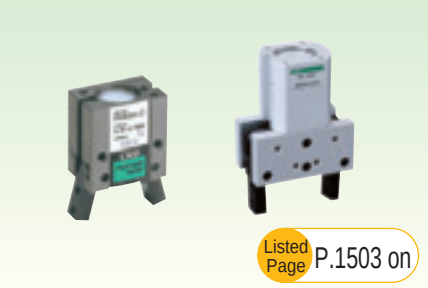

Listed Page P.1503 on

Fulcrum hand/centering hand

Hand

Series	Also known as...	Bore size (ø)	Page
Fulcrum hand			
HFP	Wide parallel hand	16x2 to 40x2	1714
FH500	Feather hand (Mini-fulcrum hand)	10 to 20	1720
HBL	Fulcrum hand	15 to 40	1726
HJL	Toggle hand	32 to 63	1732
HMD	180 degree open/close thin wide angle hand	12 to 25	1738
HDL	180 degree open/ close wide angle hand	25 to 40	1744
HJD	180 degree open/close high gripping wide angle hand	32 to 63	1748
Centering hand			
BHE	Centering hand	12 to 32	1752

Compact/powerful. Diverse variety available

Listed Page P.1771 on

Chuck

Series	Also known as...	Bore size (ø)	Page
3-way chuck			
CKL2	Powerful chuck	16 to 100	1774
CKLG2	Powerful chuck with rubber cover	20 to 100	1786
CKL2-HC	Position locking powerful chuck	32 to 80	1794
CKH2	Powerful chuck with high gripping force	50 to 100	1800
CKLB2	Bi-directional powerful chuck (parallel hand)	20 to 100	1806
CKG	3-way jaw bearing chuck	16 to 50	1814
CK	3-way jaw long stroke chuck	25 to 44	1820
CKA	3-way slim chuck	16 to 100	1826
CKS	Thin chuck	8x3 to 32x3	1834
NEW CKS-F	Slim chuck (hollow)	16x3 to 50x3	1844
CKF	Hollow chuck	30 to 80	1852
CKJ	Ultra long stroke chuck	12x6 to 50x6	1858
Auto hand changer			
CHC	Auto hand changer		1874

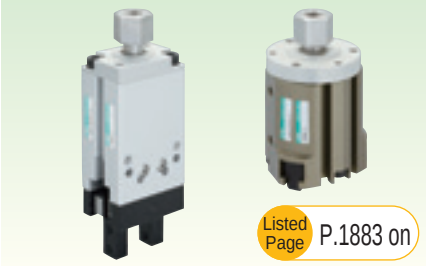

Listed Page P.1883 on

Mechanical hand/chuck

Series	Also known as...	Cylinder bore size (ø)	Page
BHA-FC	Mechanical hand	12 to 32	1884
CKL2-FC	Mechanical chuck	20 to 40	1886

Related products ▶▶▶ Pneumatic Cylinders II - P.1889

Shock absorber/**(absorbing capacity 1 to 720J)**

3 models are available according to the application

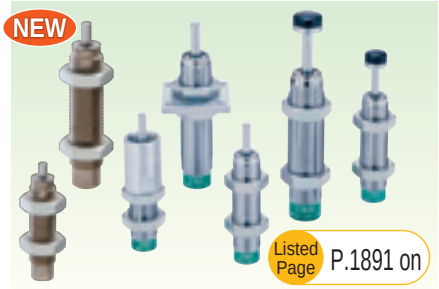

Shock absorber

SKL, NCK, SCK, FCK

Series	Also known as...	Absorbed energy	Page
Fixed			
SKL NEW	-	0.2 to 3.6	1894
NCK	-	1 to 200	1902
Adjustable			
SCK	-	0.049 to 588	1914
FCK-L	Low speed	1.5 to 79.3	1924
FCK-M	Medium speed	1.8 to 720	1924
FCK-H	High speed		1924

Absorbed energy: J

Free fitting/**(size M3 to M45)**

For preventing misalignment during cylinder mounting. 3 models available

Floating fitting

FJ

Series	Page
FJ	1948

Simplified floating connector

For preventing misalignment during cylinder mounting. Simplified.

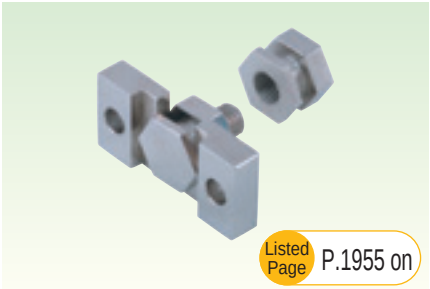

Simplified floating fitting

FK

Series	Page
FK	1956

Speed controller

With dial

Series	Port size	Features	Page
DSC	M5, R1/8, 1/4, 3/8, 1/2	Enables easy control of cylinder speed values	1966

Needle valve with adjusting dial

Series	Port size	Features	Page
DVL	R1/8, 1/4, 3/8	Visible flow rate adjustment control achieved	1980

Elbow/push-in fitting

Series	Port size	Features	Page
SC3W	M3, M5, R1/8, 1/4, 3/8, 1/2	Push-in fitting ø3.2 to ø12	1988

Universal/push-in fitting

Series	Port size	Features	Page
SC3U	M3, M5, R1/8, 1/4, 3/8, 1/2	Push-in fitting ø3.2 to ø12	1992

Line type/with push-in fitting

Series	Port size	Features	Page
SCL2	ø1.8,ø4,ø6,ø8,ø10,ø12	Applicable to the remote centralized control of actuators	1998

In/out line type/with push-in fitting

Series	Port size	Features	Page
SCD2	ø1.8,ø4,ø6,ø8,ø10,ø12	Enables flow control for both air supply and exhaust	1998

Needle valve/line type with push-in fitting

Series	Port size	Features	Page
SCL2-N	ø4,ø6,ø8	Flow rate adjustment needle valve with non-scatter grease. Usable with clean-room specs/oil-prohibited specs	2002

Stainless steel anti-corrosion

Series	Port size	Features	Page
SC3P	M5, R1/8, R1/4, R3/8, R1/2	Speed control valve with anti-corrosive stainless steel body	2008

Direct piping/elbow

Series	Port size	Features	Page
SC3R	M5, Rc1/8, 1/4, 3/8, 1/2	Direct piping, L-shape rotation M5 to Rc1/2	2012

Miniature

Series	Port size	Features	Page
SC	M3, M5	Compact, lightweight, and space saving	2014

Miniature fine speed

Series	Port size	Features	Page
SC-M5-*-F	M5	For fine speed adjustment of fine speed cylinder and air operated valve	2014

Miniature in/out

Series	Port size	Features	Page
SCD	M3, M5	Enables flow control for both air intake and exhaust	2016

Medium bore size

Series	Port size	Features	Page
SC1	Rc1/8, 1/4, 3/8, 1/2	Applicable to general medium bore sizes	2020

Large bore size

Series	Port size	Features	Page
SC	Rc3/4, 1, 1 1/4, 1 1/2, 2	Applicable to general large bore sizes	2022

Outdoor Series

Series	Port size	Features	Page
NEW SC1-W	Rc1/4, 3/8, 1/2	Applicable for outdoor use	2024

Guide to model changes

The series listed in this catalog have undergone a model changeover with these new series. Consider these new series when making selections.

■ Rodless cylinder

SRL2

Old series

■ Rodless cylinder

SRL3

New series

■ High precision guided rodless cylinder

SRG

Old series

■ High precision guided rodless cylinder

SRG3

New series

SRM

Old series

SRM3

New series

■ Rodless cylinder with brake

SRT

Old series

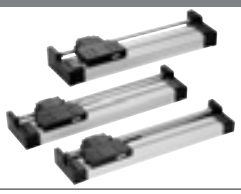

■ Rodless cylinder with brake

SRT3

New series

■ Clamp cylinder

CAC3

Old series

■ Clamp cylinder

CAC4

New series

■ Position locking clamp cylinder

UCAC

Old series

■ Position locking clamp cylinder

UCAC2

New series

■ Linear slide cylinder

LCS

Old series

■ Linear slide cylinder

LCR

New series

■ Pencil shaped cylinder

SCP*2

Old series

■ Pencil shaped cylinder

SCP*3

New series

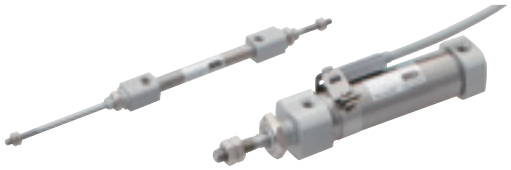

■ Large bore size cylinder

SCS

Old series

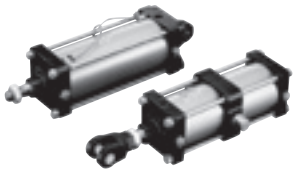

■ Large bore size cylinder

SCS2

New series

■ Brake cylinder (large bore size)

JSC3

Old series

■ Brake cylinder (large bore size)

JSC4

New series

■ Compact cylinder

SMD2

Old series

■ Compact cylinder

SMG

New series

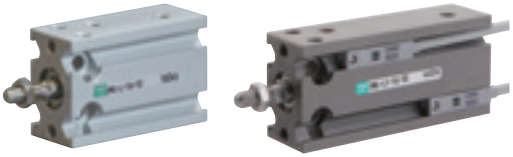

■ Rotary clamp cylinder

RCS

Old series

■ Rotary clamp cylinder

RCS2

New series

Guide to CKD's CAD data

How to use CKD's CAD data

CKD's CAD data is provided as follows for your use in CAD design.

2D CAD data

Types of compatible CAD

- DXF
- Dedicated CAD types

3D CAD data

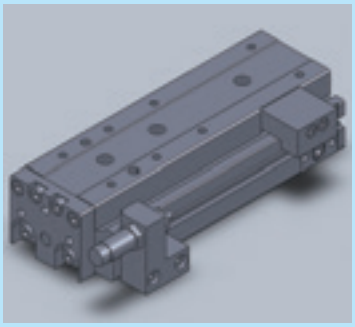

Types of compatible CAD

- DXF
- IGES
- SAT
- Parasolid
- Dedicated CAD types

Homepage

Catalog PDFs and CAD data of CKD products are available for download.

https://www.ckd.co.jp/en/

For PDF and DXF data of the general catalogs

CKD Website Component Products > Materials: Download digital catalogs/catalog PDFs

For PDF and DXF data of new products

CKD Website Component Products > Search for a product from the product list

For 2D/3D CAD data

CKD Website Component Products > Materials: Download 2D CAD data/3D CAD data

Guide to the model selection system

How to use the model selection system

The CKD system supports selection of the following items.
For your use during model selection and design.

Available on our website

This system is used to select products according to your application and working conditions.

*Downloading Software may not be possible due to your security settings. If that is the case, contact CKD.

Selection results are linked with catalog PDFs and CAD data!

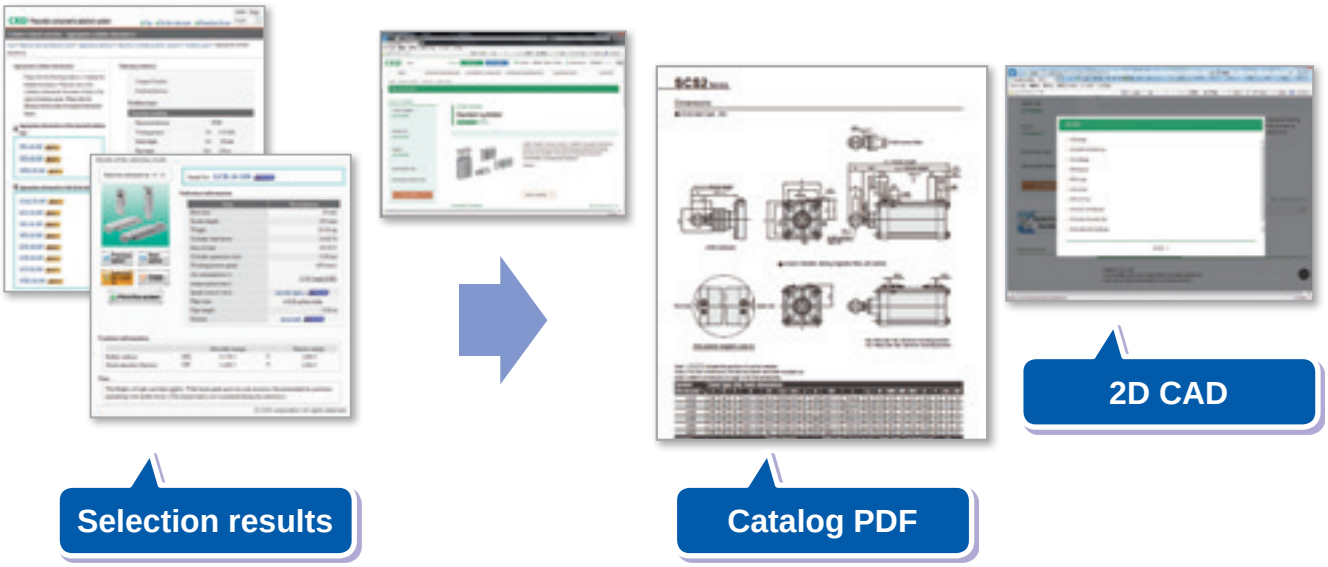

Registration not required - available at any time!

A variety of services such as CKD product catalogs, PDFs, CAD data, and model selection are available. Feel free to try them.

https://www.ckd.co.jp/en/

3 Search by bore size

Series name	Variation	Switch	2.5	4	6	8	10
Pencil shaped cylinder ● Contents/page 3, series variation/ page 4	SCPS (single acting/push)	Not available	●	●			
	SCPS3 (single acting/push)	Available			●		●
	SCPH3 (single acting/pull)	Available			●		●
	SCPD3 (double acting/single rod)	Available			●		●
	SCPD3-F (double acting/fine speed)	Available			●		●
	SCPD3-O (double acting/low speed)	Available			●		●
	SCPD3-*C (double acting/rubber-air cushioned)	Available			●		●
	SCPD3-T (double acting/heat resistance)	Not available			●		●
	SCPD3-D (double acting/double rod)	Available			●		●
	SCPD3-D T (double acting/double rod/heat resistance)	Not available			●		●
	SCPD3-Z (double acting/with speed controller)	Available					●
	SCPS3-M (single acting/push/rotation-stop)	Available					●
	SCPD3-M (double acting/rotation-stop)	Available					●
	SCPD3-K (double acting/high load)	Available			●		●
	SCPS3-V (single acting/with valve)	Available					●
	SCPD3-V (double acting/with valve)	Available					●
Small bore size cylinder ● Contents/P81, Series variation/ P82	CMK2 (double acting/single rod)	Available					
	CMK2-S (single acting/push)	Available					
	CMK2-SR (single acting/pull)	Available					
	CMK2-D (double acting/double rod)	Available					
	CMK2-B (double acting/back to back)	Available					
	CMK2-F (double acting/fine speed)	Available					
	CMK2-P (double acting/stroke adjustable/push)	Available					
	CMK2-R (double acting/stroke adjustable/pull)	Available					
	CMK2-M (double acting/rotation-stop)	Available					
	CMK2-C (double acting/air cushioned)	Available					
	CMK2-*C (double acting/rubber-air cushioned)	Available					
	CMK2-Z (double acting/integrated speed controller)	Available					
	CMK2-H (double acting/low hydraulic)	Available					
	CMK2-T (double acting/heat resistance)	Not available					
	CMK2-Q (double acting/position locking)	Available					
	CMK2-$^{G2}_{G3}$(double acting/coolant proof)	Available					
	CMK2-J$^{G2}_{G3}$(Double acting/Stainless steel)	Available					
Medium bore size cylinder ● Contents/P205/Series variation/P206	CMA2 (double acting/single rod)	Available					
	CMA2-E (double acting/direct mounting)	Available					
Round shaped Cylinder ● Contents/P227/series variation/ P228	SCM (double acting/single rod)	Available					
	SCM-X (single acting/push)	Available					
	SCM-Y (single acting/pull)	Available					
	SCM-D (double acting/double rod)	Available					
	SCM-B (double acting/back to back)	Available					
	SCM-W (double acting/2-stage)	Available					
	SCM-W4 (double acting/tandem)	Available					
	SCM-P (double acting/stroke adjustable/push)	Available					
	SCM-R (double acting/stroke adjustable/pull)	Available					
	SCM-M (double acting/rotation-stop)	Available					
	SCM-LD (double acting/direct mounting foot)	Available					
	SCM-F (double acting/fine speed)	Available					

Bore size (ø)																			Page
12	15	16	20	25	30	32	40	50	63	75	80	100	125	140	160	180	200	250	
																			I-16
		●																	I-16
		●																	I-16
		●																	I-8
		●																	I-34
		●																	I-40
		●																	I-28
		●																	I-26
		●																	I-44
		●																	I-44
		●																	I-50
		●																	I-56
		●																	I-56
		●																	I-64
		●																	I-70
		●																	I-70
			●	●		●	●												I-86
			●	●		●	●												I-100
			●	●		●	●												I-106
			●	●		●	●												I-154
			●	●		●	●												I-160
			●	●		●	●												I-148
			●	●		●	●												I-112
			●	●		●	●												I-118
			●	●		●	●												I-166
			●	●		●	●												I-136
			●	●		●	●												I-128
			●	●		●	●												I-172
			●	●		●	●												I-178
			●	●		●	●												I-124
			●	●		●	●												I-142
			●	●		●	●												I-182
			●	●		●	●												I-188
			●		●		●												I-208
			●		●		●												I-222
			●	●		●	●	●	●		●	●							I-232
			●	●		●	●												I-254
			●	●		●	●												I-260
			●	●		●	●	●	●		●	●							I-308
			●	●		●	●	●	●										I-316
			●	●		●	●	●	●										I-322
			●	●		●	●	●	●										I-328
			●	●		●	●	●	●										I-266
			●	●		●	●	●	●										I-272
			●	●		●	●	●	●										I-334
			●	●		●	●	●	●										I-340
			●	●		●	●												I-292

3 Search by bore size

Series name	Variation	Switch	2.5	4	6	8	10	
Round shaped cylinder ● Contents/p227/series variation/ p228	SCM-O (double acting/low speed)	Available						
	SCM-U (double acting/low friction)	Available						
	SCM-T (double acting/heat resistance)	Not available						
	SCM-Q (double acting/position locking)	Available						
Tie rod cylinder ● Contents/p351/series variation/ p354	SCG (double acting/single rod)	Available						
	SCG-Q (double acting/Position locking)	Available						
	SCG-O (double acting/Low speed)	Available						
	SCG-U (double acting/Low friction)	Available						
	SCG-D (double acting/Double rod)	Available						
	SCG-M (double acting/rotation-stop)	Available						
	SCG-G (double acting/heavy duty scraper)	Available						
	SCG-G2,G3 (Double acting/Coolant proof)	Available						
	SCG-G4 (double acting/anti-spatter adherence)	Available						
Medium bore size cylinder ● ItemNext/p443/Series variation/ p444	SCA2 (double acting/single rod)	Available						
	SCA2-D (double acting/double rod)	Available						
	SCA2-B (double acting/back to back)	Available						
	SCA2-W (double acting/2-stage)	Available						
	SCA2-P (double acting/stroke adjustable/push)	Available						
	SCA2-R (double acting/stroke adjustable/pull)	Available						
	SCA2-K (double acting/steel tube)	Not available						
	SCA2-H (double acting/low hydraulic)	Available						
	SCA2-T (double acting/heat resistance)	Available						
	SCA2-O (double acting/low friction)	Available						
	SCA2-U (double acting/low friction)	Available						
	SCA2-G (double acting/rubber scraper)	Available						
	SCA2-Q2 (double acting/position locking)	Available						
	SCA2-V (double acting/with valve)	Available						
	SCA2-$^{G2}_{G3}$(double acting/coolant proof)	Available						
	SCA2-$^{G1}_{G4}$(double acting/coil scraper/anti-spatter adherence)	Available						
Medium bore size cylinder ● Contents/p621/series variation/ p622	SCS2 (double acting/single rod/lubrication)	Not available						
	SCS2-N (double acting/single rod/no-lubrication)	Available						
	SCS2-D (double acting/double rod)	Available						
	SCS2-ND (double acting/double rod/no-lubrication)	Available						
	SCS2-B (double acting/back to back)	Not available						
	SCS2-W (double acting/2-stage)	Not available						
	SCS2-P (double acting/stroke adjustable)	Not available						
	SCS2-H (double acting/low hydraulic)	Available						
	SCS2-T (double acting/heat resistance)	Not available						
	SCS2-G (double acting/rubber scraper)	Not available						
Compact cylinder with valve ● Index/p675, series variation/p674	CKV2 (double acting/single rod/with valve)	Available						
	CKV2-M (double acting/rotation-stop/with valve)	Available						

Bore size(ø)																			Page
12	15	16	20	25	30	32	40	50	63	75	80	100	125	140	160	180	200	250	
			●	●		●	●	●	●		●								I-298
			●	●		●	●	●	●		●	●							I-302
			●	●		●	●	●	●		●	●							I-278
			●	●		●	●	●	●		●	●							I-282
						●	●	●	●		●	●							I-358
						●	●	●	●		●	●							I-374
						●	●	●	●		●	●							I-396
						●	●	●	●		●	●							I-402
						●	●	●	●		●	●							I-406
						●	●	●	●										I-412
						●	●	●	●		●	●							I-418
							●	●	●		●	●							I-424
						●	●	●	●		●	●							I-430
							●	●	●		●	●							I-450
							●	●	●		●	●							I-540
							●	●	●		●	●							I-548
							●	●	●		●	●							I-556
							●	●	●		●	●							I-472
							●	●	●		●	●							I-480
							●	●	●		●	●							I-564
							●	●	●		●	●							I-568
							●	●	●		●	●							I-488
							●	●	●		●	●							I-526
							●	●	●		●	●							I-534
							●	●	●		●	●							I-576
							●	●	●		●	●							I-494
							●	●	●		●	●							I-596
							●	●	●		●	●							I-584
							●	●	●		●	●							I-590
													●	●	●	●	●	●	I-626
													●	●	●	●	●	●	I-626
													●	●	●	●	●	●	I-648
													●	●	●	●	●	●	I-648
													●	●	●	●	●	●	I-654
													●	●	●	●	●	●	I-658
													●	●	●	●	●	●	I-640
													●	●	●	●	●	●	I-662
													●	●	●	●	●	●	I-644
													●	●	●	●	●	●	I-668
			●	●		●	●												I-680
			●	●		●	●												I-692

3 Search by bore size

Series name	Variation	Switch	2.5	4	6	8	10	
Cylinder with valve Short total length with cushion ● Contents/p703/series variation/ p704	CAV2-S (double acting/double solenoid/lubrication)	Available						
	COVP2-S (double acting/single solenoid/pushed out when energized/lubrication)	Available						
	COVN2-S (double acting/single solenoid/retracted in when energized/lubrication)	Available						
	CAV2-NS (double acting/double solenoid/no-lubrication)	Available						
	COVP2-NS (double acting/single solenoid/pushed out when energized/no-lubrication)	Available						
	COVN2-NS (double acting/single solenoid/retracted in when energized/no-lubrication)	Available						
Super compact cylinder ● Contents/P745/Series variation/ P748	SSD2 (double acting/single rod)	Available						
	SSD2-K (double acting/high load)	Available						
	SSD2-L (double acting/long stroke)	Available						
	SSD2-X (single acting/push)	Available						
	SSD2-Y (single acting/pull)	Available						
	SSD2-T1 (double acting/heat resistance)	Not available						
	SSD2-T1L (double acting/with heat resistant cylinder switch)	Available						
	SSD2-K-*C (double acting/high load/rubber-air cushioned)	Available						
	SSD2-Q (double acting/position locking)	Available						
	SSD2-F (double acting/fine speed)	Available						
	SSD2-KF (double acting/high load/fine speed)	Available						
	SSD2-O (double acting/low speed)	Available						
	SSD2-KU (double acting/high load/low friction)	Available						
	SSD2-D (double acting/double rod)	Available						
	SSD2-B (double acting/back to back)	Available						
	SSD2-W (double acting/2-stage)	Available						
	SSD2-M (double acting/rotation-stop)	Available						
	SSD2-DM (double acting/double rod/rotation-stop)	Available						
	SSD2-G (double acting/rubber scraper)	Available						
	SSD2-$^{G2}_{G3}$(Double acting/coolant proof)	Available						
	SSD2-$^{KG2}_{KG3}$(double acting/high load/coolant proof)	Available						
	SSD2-G1 (double acting/coil scraper)	Available						
	SSD2-G4 (double acting/anti-spatter adherence)	Available						
	SSD2-KG1 (double acting/high load/coil scraper)	Available						
	SSD2-KG4 (double acting/high load/anti-spatter adherence)	Available						
	SSD2-DG1 (double acting/double rod/coil scraper)	Available						
	SSD2-DG4 (double acting/double rod/anti-spatter adherence)	Available						
	SSD2-G5 (double acting/environment-resistant scraper)	Available						
	SSD2-KG5 (double acting/high load/environment-resistant scraper)	Available						
	SSD2-L4 (double acting/with strong magnetic field proof switch)	Available						
	SSD2-G1L4 (double acting/with strong magnetic field proof switch/with coil scraper)	Available						
	SSD2-KL4 (double acting/high load/with strong magnetic field proof switch)	Available						
	SSD2-KG1L4 (double acting/high load/with strong magnetic field proof switch/with coil scraper)	Available						
	SSD2-P7* (double acting/clean-room specifications)	Available						
Guided super Compact cylinder ● Contents/P1065/Series variation/P1067	SSG (double acting/single rod)	Available						

Bore size (ø)																			Page
12	15	16	20	25	30	32	40	50	63	75	80	100	125	140	160	180	200	250	
								●		●		●							I-710
								●		●		●							I-710
								●		●		●							I-710
								●		●		●							I-710
								●		●		●							I-710
								●		●		●							I-710
●		●	●	●		●	●	●	●		●	●	●	●	●	●	●		I-752
●		●	●	●		●	●	●	●		●	●							I-776
●		●	●	●		●	●	●	●		●	●							I-792
●		●	●	●		●	●	●											I-802
●		●	●	●		●	●	●											I-802
●		●	●	●		●	●	●	●		●	●							I-820
●		●	●	●		●	●	●	●										I-824
			●	●		●	●	●	●		●	●							I-832
			●	●		●	●	●	●		●	●							I-840
●		●	●	●		●	●	●	●		●	●							I-854
●		●	●	●		●	●	●	●		●	●							I-854
●		●	●	●		●	●	●	●		●	●							I-858
			●	●		●	●	●	●		●	●							I-864
●		●	●	●		●	●	●	●		●	●	●	●	●	●	●		I-868
●		●	●	●		●	●	●	●		●	●							I-890
●		●	●	●		●	●	●	●		●	●							I-902
●		●	●	●		●	●	●	●										I-910
●		●	●	●		●	●	●	●										I-924
			●	●		●	●	●	●		●	●							I-936
		●	●	●		●	●	●	●		●	●							I-946
		●	●	●		●	●	●	●		●	●							I-956
				●		●	●	●	●		●	●							I-966
				●		●	●	●	●		●	●							I-966
				●		●	●	●	●		●	●							I-974
				●		●	●	●	●		●	●							I-974
				●		●	●	●	●		●	●							I-984
				●		●	●	●	●		●	●							I-984
			●	●		●	●	●	●		●	●							I-992
			●	●		●	●	●	●		●	●							I-1002
							●	●	●		●	●							I-1012
							●	●	●		●	●							I-1018
							●	●	●		●	●							I-1024
							●	●	●		●	●							I-1030
●		●	●	●		●	●	●	●		●	●	●	●	●				I-1036
●		●	●	●		●	●	●	●		●	●							I-1068

3 Search by bore size

Series name	Variation	Switch	2.5	4	6	8	10
Super compact cylinder ● Contents/p1081/series variation/ p1082	SSD (double acting/single rod)	Available					
	SSD-X (single acting/push)	Available					
	SSD-Y (single acting/pull)	Available					
	SSD-D (double acting/double rod)	Available					
	SSD-B (double acting/back to back)	Available					
	SSD-W (double acting/2-stage)	Available					
	SSD-K (double acting/single rod/high load)	Available					
	SSD-K-*C (double acting/high load/rubber-air cush-	Available					
	SSD-T (double acting/heat resistance)	Not available					
	SSD-T1L (double acting/with heat resistant cylinder switch)	Available					
	SSD-F (double acting/fine speed)	Available					
	SSD-KF (double acting/high load/fine speed)	Available					
	SSD-O (double acting/low speed)	Available					
	SSD-M (double acting/rotation-stop)	Available					
	SSD-KU (double acting/high load/low friction)	Available					
	SSD-Q (double acting/position locking)	Available					
	SSD-$^{G2}_{G3}$(double acting/coolant proof)	Available					
	SSD-$^{KG2}_{KG3}$(double acting/high load/coolant proof)	Available					
	SSD-$^{G1}_{G4}$(double acting/anti-spatter adherence)	Available					
	SSD-$^{KG1}_{KG4}$(double acting/high load/anti-spatter adherence)	Available					
	SSD-$^{DG1}_{DG4}$(double acting/double rod/anti-spatter adherence)	Available					
	SSD- G5 (double acting/Environment-resistant scraper)	Available					
	SSD- KG5 (double acting/high load/Environment-resistant scraper)	Available					
Cartridge cylinder ● Contents/p1339/series variation/p1339	CAT (single acting/push)	Not available			●		●
Compact direct mounting cylinder ● Contents/p1345/series variation/ p1346	MDC2 (double acting/single rod)	Available		●	●	●	●
	MDC2-X (single acting/push)	Available		●	●	●	●
	MDC2-Y (single acting/pull)	Available		●	●	●	●
	MDC2-F (double acting/fine speed)	Available			●	●	●
Compact cylinder with suction pad ● Contents/p1371/series variation/p1373	MVC (double acting/single rod)	Available			●		●
Compact cylinder ● Contents/P1383/Series variation/ P1385	SMG (double acting/single rod)	Available			●		●
	SMG-X (single acting/push)	Available			●		●
	SMG-Y (single acting/pull)	Available			●		●
	SMG-F (double acting/fine speed)	Available			●		●
	SMG-M (double acting/rotation-stop)	Available			●		●
Small compact cylinder ● Contents/p1415/series variation/ p1418	MSD (double acting/single rod)	Available			●	●	
	MSD-X (single acting/push)	Available			●	●	
	MSD-Y (single acting/pull)	Available			●	●	
	MSD-K (double acting/high load)	Available			●	●	
	MSDG-L (double acting/guided)	Available			●	●	
	MSD-F (double acting/fine speed)	Available			●	●	
	MSD-KF (double acting/high load/fine speed)	Available			●	●	
	MSDG-LF (double acting/guided/high load)	Available					

Bore size (ø)																			Page
12	15	16	20	25	30	32	40	50	63	75	80	100	125	140	160	180	200	250	
		●	●	●		●	●	●	●		●	●	●	●	●				I-1094
●		●	●	●		●	●	●											I-1126
●		●	●	●		●	●	●											I-1126
●		●	●	●		●	●	●	●		●	●	●	●	●				I-1188
●		●	●	●		●	●	●	●		●	●							I-1200
●		●	●	●		●	●	●	●		●	●							I-1210
●		●	●	●		●	●	●	●		●	●							I-1116
			●	●		●	●	●	●		●	●							I-1150
		●	●	●		●	●	●	●		●	●							I-1138
		●	●	●		●	●	●	●										I-1142
●		●	●	●		●	●	●	●		●	●							I-1172
●		●	●	●		●	●	●	●		●	●							I-1172
●		●	●	●		●	●	●	●		●	●							I-1178
●		●	●	●		●	●	●	●										I-1220
●			●	●		●	●	●	●		●	●							I-1184
		●																	I-1160
		●	●	●		●	●	●	●		●	●							I-1230
		●	●	●		●	●	●	●		●	●							I-1238
						●	●	●	●		●	●							I-1246
						●	●	●	●		●	●							I-1254
						●	●	●	●		●	●							I-1264
			●	●		●	●	●	●		●	●							I-1272
			●	●		●	●	●	●		●	●							I-1280
	●																		I-1340
																			I-1348
																			I-1354
																			I-1354
																			I-1364
																			I-1374
		●	●	●		●													I-1386
		●	●	●		●													I-1392
		●	●	●		●													I-1392
		●	●	●		●													I-1400
		●	●	●		●													I-1404
																			I-1422
																			I-1430
																			I-1430
●		●																	I-1440
●		●																	I-1452
																			I-1450
●		●																	I-1450
●		●																	I-1462

3 Search by bore size

Series name	Variation	Switch	2.5	4	4.5	6	8	10
Flat cylinder compact demi ● Contents/p1473/series variation/ p1474	FCS (single acting/push)	Available						
	FCH (single acting/pull)	Available						
	FCD (double acting/single rod)	Available						
	FCD-D (double acting/double rod)	Available						
	FCD-K (double acting/cushioned)	Available						
Stopper cylinder ● Contents/p1509/series variation/ p1510	STK (double acting/round rod end)	Available						
	STK-Y (single acting/retracted in when energized/round rod end)	Available						
	STK-Y1 (double acting/with spring/round rod end)	Available						
	STK-M (double acting/rod end chamfered type)	Available						
	STK-MY (single acting/pull/rod end chamfered type)	Available						
	STK-MY1 (double acting/with spring/rod end chamfered type)	Available						
	STK-JY (single acting/retracted in when energized/rod end roller)	Available						
	STK-JY1 (double acting/with spring/rod end roller)	Available						
Rodless cylinder ● Contents/p1569/series variation/ p1570	SRL3 (double acting)	Available						
	SRL3-G (double acting/with resin guide)	Available						
	SRL3-Q (double acting/position locking)	Available						
	SRL3-GQ (double acting/with resin guide/position locking)	Available						
High precision guided rodless cylinder ● Contents/p1645/series variation/p1646	SRG3 (double acting)	Available						
High precision guided rodless cylinder ● Contents/p1673/series variation/p1674	SRM3 (double acting)	Available						
	SRM3-Q (double acting/position locking)	Available						
Rodless cylinder with brake ● Contents/p1703/series variation/p1704	SRT3 (double acting)	Available						
Magnet rodless cylinder ● Contents/p1731/series variation/ p1736	MRL2 (double acting/basic)	Available				●		●
	MRL2-G (simplified guide 1-piston)	Available				●		●
	MRL2-W (simplified guide 2-piston)	Available				●		●
	MRL2-F (double acting/Basic type/fine speed)	Available				●		●
	MRL2-GF (simplified guide 1-piston/fine speed)	Available				●		●
	MRL2-WF (simplified guide 2-piston/fine speed)	Available				●		●
Magnet rodless cylinder With high precision guide ● Contents/p1763/series variation/p1765	MRG2 (double acting)	Available						●
Shuttle mover ● Contents/p1783	SM-25	Not available						
Linear slide cylinder ● Contents/page 5, series variation/ page 8	LCM (double acting/single rod)	Available			●	●	●	
	LCM-P (double acting/stroke adjustable/push)	Available			●	●	●	
	LCM-R (double acting/stroke adjustable/pull)	Available			●	●	●	
	LCM-A (double acting/side mounting)	Available			●	●	●	
Linear slide cylinder ● Contents/page 53, series variation/page 56	LCR (double acting/single rod)	Available				●	●	
	LCR-Q (double acting/position locking)	Available					●	
	LCR-F (double acting/single rod/fine speed)	Available						

Bore size (ø)																			Page
12	15	16	20	25	30	32	40	50	63	75	80	100	125	140	160	180	200	250	
				●		●	●	●	●										I-1480
				●		●	●	●	●										I-1480
				●		●	●	●	●										I-1488
				●		●	●	●	●										I-1494
				●		●	●	●	●										I-1500
			●			●	●	●											I-1512
			●			●	●	●											I-1518
			●			●	●	●											I-1524
			●			●	●	●											I-1530
			●			●	●	●											I-1536
			●			●	●	●											I-1542
			●			●	●	●											I-1548
			●			●	●	●											I-1554
●		●	●	●		●	●	●	●		●	●							I-1574
●		●	●	●		●	●	●	●		●	●							I-1590
●		●	●	●		●	●	●	●		●	●							I-1604
●		●	●	●		●	●	●	●		●	●							I-1614
●		●	●	●															I-1650
				●		●	●		●										I-1676
				●		●	●		●										I-1676
●		●	●	●		●	●	●	●										I-1706
		●	●	●		●													I-1740
		●	●	●		●													I-1740
		●	●	●		●													I-1740
		●	●	●		●													I-1740
		●	●	●		●													I-1740
		●	●	●		●													I-1740
		●		●															I-1766
				●															I-1784
																			II-10
																			II-18
																			II-24
																			II-30
●		●	●	●															II-58
●		●	●	●															II-84
●		●	●	●															II-112

3 Search by bore size

Series name	Variation	Switch	2.5	4	6	8	10
Linear slide cylinder ● Contents/p135/series variation/p138	LCG (double acting/single rod)	Available			●	●	
	LCG-Q (double acting/position locking)	Available				●	
Linear slide cylinder ● Contents/p199/series variation/p202	LCW (double acting/single rod)	Available					
	LCW-Q (double acting/position locking)	Available					
Linear slide cylinder ● Contents/p249/series variation/p252	LCX (double acting/single rod)	Available					
	LCX-Q (double acting/position locking)	Available					
	LCX-P7* (double acting/clean-room specifications)	Available					
	LCX-*L (double acting/long stroke)	Available					
	LCX-Q-*L (double acting/position locking/long stroke)	Available					
	LCX-*L-P7* (double acting/clean-room specifications/long stroke)	Available					
Guided cylinder ● Contents/p309/series variation/p310	STM-M/B (double acting/single rod)	Available			●		●
	STM-M/B -P7* (double acting/clean-room specifications)	Available			●		●
Guided cylinder ● Contents/p329/series variation/p332	STG-$^{M}_{B}$(double acting/single rod)	Available					
	STG-$^{M}_{B}$ -*C (double acting/rubber-air cushioned)	Available					
	STG-$^{M}_{B}$ C (double acting/air cushioned)	Available					
	STG-$^{M}_{B}$ Q (double acting/position locking)	Available					
	STG-$^{M}_{B}$ G,G1(double acting/rubber scraper/coil scraper)	Available					
	STG-$^{M}_{B}$ G2, G3 (double acting/coolant proof)	Available					
	STG-$^{M}_{B}$ G4 (double acting/anti-spatter adherence)	Available					
	STG-MG5 (double acting/environment-resistant scraper)	Available					
Guided cylinder ● Contents/p441/series variation/p442	ST$^{S}_{L}$ -$^{M}_{B}$ (double acting/single rod)	Available			●		
	ST$^{S}_{L}$- $^{M}_{B}$ F (double acting/fine speed)	Available			●		
	ST$^{S}_{L}$- $^{M}_{B}$O (double acting/low speed)	Available			●		
	ST$^{S}_{L}$-$^{MG}_{MG1}$ (double acting/scraper)	Available					
	ST$^{S}_{L}$- $^{M}_{B}$ T (double acting/heat resistance)	Not available					
	ST $^{S}_{L}$- $^{M}_{B}$T2 (double acting/packing material fluoro rubber)	Available					
	ST$^{S}_{L}$ -$^{M}_{B}$ P (double acting/stroke adjustable/push)	Available			●		
	ST$^{S}_{L}$ -$^{M}_{B}$ Q (double acting/position locking)	Available					
	ST$^{S}_{L}$ -$^{M}_{B}$ V (double acting/valve equipped)	Available					
	ST$^{S}_{L}$ -$^{M}_{B}$ C (double acting/air cushioned)	Available					
	ST$^{S}_{L}$ - $^{M}_{B}$ -*C (double acting/rubber-air cushioned)	Available					
	ST$^{S}_{L}$ - $^{MG\ 2}_{BG3}$ (double acting/coolant proof)	Available					
	ST$^{S}_{L}$ - $^{MG1}_{BG4}$ (double acting/anti-spatter adherence)	Available					
Twin rod cylinder ● Contents/p575/series variation/p576	STR2-$^{M}_{B}$(Double acting/single rod)	Available			●		●
	STR2-$^{M}_{B}$ F (double acting/fine speed)	Available					●
	STR2-$^{M}_{B}$ O (double acting/low speed)	Available			●		●
	STR2-$^{M}_{B}$ D (double acting/double rod)	Available			●		●
	STR2- $^{M}_{B}$Q (double acting/position locking)	Available					
Unit cylinder ● Contents/p635/series variation/p636	UCA2 (double acting/single rod/metal bush bearing)	Available					●
	UCA2-B (double acting/single rod/ball bearing)	Available					●

Bore size (ø)																				Page
12	15	16	20	25	30	32	40	50	63	75	80	100	125	140	160	180	200	250	
				●		●													II-206
				●		●													II-216
				●		●													II-222
				●		●													II-228
				●		●													II-238
				●		●													II-244
																			II-314
																			II-320
●		●	●	●		●	●	●	●		●								II-336
						●	●	●	●										II-350
		●	●	●		●	●	●	●										II-358
			●	●		●	●	●	●										II-368
			●	●		●	●	●	●										II-376
			●	●		●	●	●	●										II-382
							●	●	●										II-388
			●	●		●	●	●	●		●	●							II-394
●		●	●	●		●	●	●	●		●	●							II-444
●		●	●	●		●	●	●	●		●								II-466
●		●	●	●		●	●	●	●		●								II-472
			●	●		●	●	●	●		●								II-476
●		●	●	●		●	●	●	●		●								II-482
●		●	●	●		●	●	●	●		●								II-488
●		●	●	●		●	●	●	●		●								II-496
			●	●		●	●	●	●		●								II-508
			●	●		●	●	●	●										II-510
				●		●	●	●	●		●								II-514
						●	●	●	●		●								II-522
			●	●		●	●	●	●		●								II-532
								●	●		●								II-540
		●	●	●		●													II-572
		●	●	●		●													II-584
		●	●	●		●													II-594
		●	●	●		●													II-602
		●	●	●		●													II-604
		●		●		●													II-630
		●		●		●													II-640

3 Search by bore size

Series name	Variation	Switch	2.5	4	4.5	6	8	10
Brake cylinder ● Contents/p671/series variation/p672	ULKP (double acting)	Available						
	ULK (double acting/single rod)	Available						
	ULK-V (double acting/with valve)	Available						
Brake cylinder small bore size/crimping ● Contents/p701/series variation/p702	JSK2 (double acting/single rod)	Available						
	JSK2-V (double acting/with valve)	Available						
Brake cylinder small bore size/disassembling ● Contents/p701/series variation/p702	JSM2 (double acting/single rod)	Available						
	JSM2-V (double acting/with valve)	Available						
Tie rod cylinder with brake ● Contents/p737/series variation/p740	JSG (double acting/single rod)	Available						
	JSG-V (double acting/with valve for brake release)	Available						
Brake cylinder medium and large bore size ● Contents/p767/series variation/p768	JSC3 (-S)/JSC4 (double acting/single rod/low pressure release)	Available						
	JSC3-V (S) (double acting/with valve for brake/low pressure release)	Available						
	JSC3-H(S)/JSC4-H (double acting/low hydraulic/low pressure release)	Available						
	JSC3-T(S)/JSC4-T (double acting/heat resistance/low pressure release)	Not available						
Position locking compact cylinder ● Contents/p841/series variation/p844	USSD (double acting/single rod)	Available						
	USSD-K (double acting/single rod/high load)	Available						
Free position locking flat cylinder ● Contents/p885/series variation/p887	UFDC-KL(double acting/single rod/cushioned)	Available						
Free position locking medium bore size cylinders ● Contents/p901/series variation/p902	USC (double acting/single rod)	Available						
	USC-G1 (double acting/with coil scraper)	Available						
High energy absorption cylinder ● Contents/p957/series variation/p958	HCM (double acting)	Available						
High speed cylinder ● Contents/p975/series variation/p976	HCA (double acting/single rod)	Available						
Clamp cylinder ● Contents/p1005/series variation/p1006	CAC4 (double acting/single rod)	Available						
	CAC4-G4 (double acting/anti-spatter adherence)	Available						
Position locking clamp cylinder ● Contents/p1029/series variation/p1029	UCAC2 (double acting)	Available						
Lightweight clamp cylinder ● Contents/p1043/series variation/p1045	CAC-N (double acting/single rod)	Available						
Position locking and lightweight clamp cylinder ● Contents/p1043/series variation/p1045	UCAC-N (double acting/single rod)	Available						
Rotary clamp cylinder ● Contents/p1063/series variation/p1066	RCS2 (double acting/single rod)	Available						
	RCS2-T2 (double acting/Packing material fluoro rubber)	Available						
	RCS2-G4 (double acting/Anti-spatter adherence)	Available						
Rotary clamp cylinder ● Contents/p1095/series variation/p1095	RCC2 (double acting/single rod)	Available						
	RCC2-G4 (double acting/anti-spatter adherence)	Available						
Pin clamp cylinder ● Contents/p1117	PCC (double acting/single rod)	Available						
	PCC-Q (double acting/position locking)	Available						
High power cylinder ● Contents/p1137/series variation/p1142	SHC (double acting/double force)	Available						
	SHC-K (double acting/quadruple force)	Available						
Guideless cylinder ● Contents/p1193/series variation/p1196	GLC (double acting)	Available						
Robot cylinder ● Contents/p1213/series variation/p1214	MFC (double acting/single rod)	Available						
	MFC-K (double acting/high load)	Available						
	MFC-B (double acting/with brake)	Available						
	MFC-BK (double acting/with brake/high load)	Available						
	MFC-BS (double acting/with brake sensor)	Not available						
	MFC-BSK (double acting/with brake sensor/high load)	Not available						
Balancer unit ● Contents/p1253/series variation/p1256	BBS-A (auto pressure adjustment)	Available						
	BBS-O (fixed pressure adjustment)	Available						

Bore size (ø)																			Page
12	15	16	20	25	30	32	40	50	63	75	80	100	125	140	160	180	200	250	
		●																	II-674
			●	●		●	●												II-680
			●	●		●	●												II-680
			●	●		●	●												II-706
			●	●		●	●												II-706
			●		●		●												II-720
			●		●		●												II-720
							●	●	●		●	●							II-742
							●	●	●		●	●							II-742
							●	●	●		●	●	●	●	●	●			II-774
							●	●	●		●	●							II-810
							●	●	●		●	●	●	●	●	●			II-818
							●	●	●		●	●	●	●	●	●			II-830
			●	●		●	●	●	●		●	●							II-846
			●	●		●	●	●	●		●	●							II-846
				●		●	●	●	●										II-888
							●	●	●		●	●							II-904
							●	●	●		●	●							II-904
			●	●		●	●	●	●										II-960
			●	●		●	●	●	●		●	●							II-978
							●	●	●		●								II-1008
							●	●	●		●								II-1020
								●	●										II-1030
						●	●												II-1046
						●	●												II-1052
●		●	●	●		●	●	●	●										II-1068
●		●	●	●		●	●	●	●										II-1078
						●	●	●	●										II-1084
		●	●	●		●	●	●	●										II-1096
			●	●		●	●	●	●										II-1108
								●											II-1118
								●											
							●	●	●		●	●							II-1144
							●	●	●		●	●							II-1154
							●	●	●		●	●							II-1198
					●		●	●	●		●								II-1218
					●		●	●	●		●								II-1218
					●		●	●	●		●								II-1226
					●		●	●	●		●								II-1226
					●		●	●	●		●								II-1236
					●		●	●	●		●								II-1236
								●	●		●	●							II-1258
								●	●		●	●							II-1270

4 Search by specifications and variation

Single acting (push/pull)

Series/model series name		Bore size (ø)	Remarks	Page
CAT	Cartridge cylinder	6 to 15	Push type	I-1340
CMK2-S	Medium bore size cylinder	20 to 40	Push type	I-100
CMK2-SR	Medium bore size cylinder	20 to 40	Pull type	I-106
FCH	Flat compact cylinder	25 to 63	Pull type	I-1480
FCS	Flat compact cylinder	25 to 63	Push type	I-1480
MDC2-X	Small direct mounting cylinder	4 to 10	Push type	I-1354
MDC2-Y	Small direct mounting cylinder	4 to 10	Pull type	I-1354
MSD-X	Small compact cylinder	6/8	Push type	I-1430
MSD-Y	Small compact cylinder	6/8	Pull type	I-1430
SCM-X	Round shaped cylinder	20 to 40	Push type	I-254
SCM-Y	Round shaped cylinder	20 to 40	Pull type	I-260
SCPH3	Pencil shaped cylinder	6 to 16	Pull type	I-16
SCPS	Pencil shaped cylinder	2.5/4	Push type	I-16
SCPS3	Pencil shaped cylinder	6 to 16	Push type	I-16
SMG-X	Compact cylinder	6 to 32	Push type	I-1392
SMG-Y	Compact cylinder	6 to 32	Pull type	I-1392
SSD2-X	Compact cylinder	12 to 50	Push type	I-802
SSD2-Y	Compact cylinder	12 to 50	Pull type	I-802
SSD-X	Compact cylinder	12 to 50	Push type	I-1126
SSD-Y	Compact cylinder	12 to 50	Pull type	I-1126
STK-JY	Stopper cylinder	20 to 50	Pull type	I-1548
STK-MY	Stopper cylinder	20 to 50	Pull type	I-1536
STK-Y	Stopper cylinder	20 to 50	Pull type	I-1518

Single acting (push/pull) Single rod Double rod Rodless Rotation-stop Fine speed Low speed Low friction Heat resistance Integrated speed controller
High load Back to back Stroke adjustable Side installation Air cushioned/rubber-air cushioned Low hydraulic Position locking Two-stage Scraper Valve
Tandem Metal bush bearing/ball bearing High precision guide Rechargeable battery Clean-room specifications Copper and PTFE free Coolant proof Anti-spatter adherence

Double acting/single rod

Series/model series name		Bore size (ø)	Remarks	Page
CAC-N	Lightweight clamp cylinder	32/40		II-1046
CAC4	Clamp cylinder	40 to 80		II-1008
CMA2	Medium bore size cylinder	20 to 40		I-208
CMK2	Medium bore size cylinder	20 to 40		I-86
FCD	Flat compact cylinder	25 to 63		I-1480
GLC	Guideless cylinder	40 to 100		II-1198
HCA	High speed cylinder	20 to 100		II-978
HCM	High energy absorption cylinder	20 to 63		II-960
JSC3(-N)/JSC4-N	Brake cylinder	25 to 63/125 to 180		II-774
JSG	Tie rod cylinder with brake	40 to 100		II-742
JSK2	Brake cylinder (small bore size/caulking)	20 to 40		II-706
JSM2	Brake cylinder (small bore size/disassembling)	20 to 40		II-720
LCR	Linear slide cylinder	8 to 25		II-58
LCG	Linear slide cylinder	6 to 25		II-140
LCM	Linear slide cylinder	4.5 to 8		II-10
LCW	Linear slide cylinder	12 to 20		II-204
LCX	Thin linear slide cylinder	25/32		II-254
MDC2	Small direct mounting cylinder	4 to 10		I-1348
MFC	Robot cylinder	30 to 80		II-1218
MSD	Small compact cylinder	6/10		I-1422
MVC	Small cylinder with suction pad	6/10		I-1374
PCC	Pin clamp cylinder	50		II-1118
RCS2	Rotary clamp cylinder	12 to 63		II-1068
RCC2	Rotary clamp cylinder	16 to 63		II-1096
SCA2	Medium bore size cylinder	40 to 100		I-450
SCG	Tie rod cylinder	32 to 100		I-358
SCM	Round shaped cylinder	20 to 100		I-232
SCPD3	Pencil shaped cylinder	6 to 16		I-8
SCS2	Large bore size cylinder	125 to 250	Lubrication	I-626
SCS2-N	Large bore size cylinder	125 to 250	No-lubrication	I-626
SHC	High power cylinder	40 to 100		II-1144
SMG	Compact cylinder	6 to 32		I-1386
SSD2	Compact cylinder	12 to 200		I-752
SSG	Guided super compact cylinder	12 to 100		I-1068
SSD	Compact cylinder	12 to 160		I-1094
UCAC-N	Position locking and lightweight clamp cylinder	32/40		II-1052
STM	Guided cylinder	6/10		II-314
UCAC2	Position locking clamp cylinder	50/63		II-1030
UFCD	Free position locking flat cylinder	25 to 63		II-888
ULK	Brake cylinder	20 to 40		II-680
ULKP	Brake cylinder	16		II-674
USC	Free position locking medium bore size cylinder	40 to 100		II-904
USSD	Position locking compact cylinder	20 to 100		II-846

4 Search by specifications and variation

Double acting/double rod

Series/model series name		Bore size (ø)	Remarks	Page
CMK2-D	Small bore size cylinder	20 to 40		I-154
FCD-D	Flat compact cylinder	25 to 63		I-1494
SCA2-D	Medium bore size cylinder	40 to 100		I-540
SCG-D	Tie rod cylinder	32 to 100		I-406
SCM-D	Round shaped cylinder	20 to 100		I-308
SCPD3-D	Pencil shaped cylinder	6 to 16		I-44
SCS2-D	Medium bore size cylinder	125 to 250	Lubrication	I-648
SCS2-ND	Medium bore size cylinder	125 to 250	No-lubrication	I-648
SSD2-D	Compact cylinder	12 to 200		I-868
SSD-D	Compact cylinder	12 to 160		I-1188
STR2-$^{M}_{B}$D	Twin rod cylinder	6 to 32		II-612

Rodless

Series/model series name		Bore size (ø)	Remarks	Page
SRL3	Rodless cylinder double acting	12 to 100		I-1574
SRL3-G	Rodless cylinder resin guide	12 to 100		I-1590
SRL3-Q	Rodless cylinder with position locking function	12 to 100		I-1604
SRL3-GQ	Rodless cylinder With resin guide/position locking function	12 to 100		I-1614
SRG3	High precision guided rodless cylinder double acting	12 to 25		I-1650
SRM3	High precision guided rodless cylinder double acting	25 to 63		I-1676
SRM3-Q	High precision guided rodless cylinder position locking	25 to 63		I-1676
SRT3	Rodless cylinder with brake Double acting	12 to 63		I-1706
MRL2	Magnet rodless cylinder basic	6 to 32		I-1740
MRL2-G	Magnet rodless cylinder Simplified guide 1-piston	6 to 32		I-1740
MRL2-W	Magnet rodless cylinder Simplified guide 2-piston	6 to 32		I-1740
MRG2	Magnet rodless cylinder With high precision guide	10 to 25		I-1766
SM-25	Shuttle mover	25		I-1784

Rotation-stop

Rotation-stop of piston rod is possible.

Series/model series name		Bore size (ø)	Remarks	Page
CKV2-M	Compact cylinder with valve	20 to 40	Double acting/with valve	I-692
CMK2-M	Small bore size cylinder	20 to 40		I-166
SCG-M	Tie rod cylinder	32 to 63		I-412
SCM-M	Round shaped cylinder	20 to 40		I-334
SCPD3-M	Pencil shaped cylinder	10/16		I-56
SCPS3-M	Pencil shaped cylinder	10/16	Single acting/push	I-56
SMG-M	Compact cylinder	6 to 32		I-1404
SSD-M	Compact cylinder	12 to 63		I-1220
SSD2-M	Compact cylinder	12 to 63		I-910

Fine speed

Realizing smooth ultra low speed operation without stick-slip (1 mm/s up).

Series/model series name		Bore size (ø)	Remarks	Page
CMK2-F	Medium bore size cylinder	20 to 40		I-148
GRC-F	Table rotary actuator	-	Effective torque (N·m) 0.5, 1.0, 2.0, 3.0, 5.0, 8.0	II-1316
LCR-F	Linear slide cylinder	12 to 25		II-112
MDC2-F	Small direct mounting cylinder	6 to 10		I-1364
MRL2-F	Magnet rodless cylinder	6 to 32		I-1740
MSD-F	Small compact cylinder	6/8		I-1450
MSD-KF	Small compact cylinder high load	6 to 16		I-1450
MSDG-LF	Small compact cylinder guided	12/16		I-1462
SCPD3-F	Pencil shaped cylinder	6 to 16		I-34
SCM-F	Round shaped cylinder	20 to 40		I-292
SMG-F	Compact cylinder	6 to 32		I-1400
SSD2-F	Compact cylinder	12 to 100		I-854
SSD2-KF	Compact cylinder high load	12 to 100		I-854
SSD-F	Compact cylinder	12 to 100		I-1172
SSD-KF	Compact cylinder high load	12 to 100		I-1172
ST$^{S}_{L}$-$^{M}_{B}$F	Guided cylinder	8 to 80		II-512
STR2-$^{M}_{B}$F	Twin rod cylinder	10 to 32		II-610

Low speed

Realizing smooth low speed operation without stick-slip (10 mm/s up).

Series/model series name		Bore size (ø)	Remarks	Page
SCG-O	Tie rod cylinder	32 to 100		I-396
SCM-O	Round shaped cylinder	20 to 100		I-298
SCPD3-O	Pencil shaped cylinder	6 to 16		I-40
SSD2-O	Compact cylinder	12 to 100		I-858
SSD-O	Compact cylinder	12 to 100		I-1178
ST$^{S}_{L}$-$^{M}_{B}$O	Guided cylinder	8 to 80		II-514
STR2-$^{M}_{B}$O	Twin rod cylinder	6 to 32		II-602

Low friction

Low friction cylinder which realizes minimum sliding resistance for use with low pressure through high pressure.

Series/model series name		Bore size (ø)	Remarks	Page
SCA2-U	Medium bore size cylinder	40 to 100		I-534
SCG-U	Tie rod cylinder	32 to 100		I-402
SCM-U	Round shaped cylinder	20 to 100		I-302
SSD2-KU	Compact cylinder	20 to 100		I-864
SSD-KU	Compact cylinder	20 to 100		I-1184

Heat resistance

Series/model series name		Bore size (ø)	Remarks	Page
CMK2-T	Medium bore size cylinder	20 to 40		I-124
JSC3-T	Brake cylinder	40 to 100		II-830
SCA2-T	Medium bore size cylinder	40 to 100		I-488
SCM-T	Round shaped cylinder	20 to 100		I-278
SCPD3-DT	Pencil shaped cylinder	6 to 16	Double acting/double rod	I-44
SCPD3-T	Pencil shaped cylinder	6 to 16		I-26
SCS2-T	Large bore size cylinder	125 to 250		I-644
SSD-T	Compact cylinder	12 to 100		I-1138
SSD2-T1	Compact cylinder	12 to 100		I-820
ST$^{S}_{L}$-$^{M}_{B}$T	Guided cylinder	12 to 80		II-476

4 Search by specifications and variation

Integrated speed controller

Series/model series name		Bore size (ø)	Remarks	Page
CMK2-Z	Medium bore size cylinder	20 to 40		I-172
SCPD3-Z	Pencil shaped cylinder	10/16		I-50

High load

Series/model series name		Bore size (ø)	Remarks	Page
MFC-BK	Robot cylinder	30 to 80	With brake	II-1226
MFC-BSK	Robot cylinder	30 to 80	With brake sensor	II-1236
MFC-K	Robot cylinder	30 to 80		II-1218
MSD-K	Small compact cylinder	6 to 16		I-1440
SCPD3-K	Pencil shaped cylinder	6 to 16		I-64
SSD2-K	Compact cylinder	12 to 100		I-776
SSD2-K-*C	Compact cylinder	20 to 100		I-832
SSD-K	Compact cylinder	12 to 100		I-1116
SSD-K-*C	Compact cylinder	32 to 100	With rubber-air cushion	I-1150
USSD-K	Position locking compact cylinder	20 to 100		II-846

Back to back

Two air cylinders integrated as back to back can be individually controlled.

Series/model series name		Bore size (ø)	Remarks	Page
CMK2-B	Medium bore size cylinder	20 to 40		I-160
SCA2-B	Medium bore size cylinder	40 to 100		I-548
SCM-B	Round shaped cylinder	20 to 40		I-316
SCS2-B	Large bore size cylinder	125 to 250		I-654
SSD2-B	Compact cylinder	12 to 100		I-890
SSD-B	Compact cylinder	12 to 100		I-1200

Stroke adjustable

Series/model series name		Bore size (ø)	Remarks	Page
CMK2-P	Medium bore size cylinder	20 to 40	Push	I-112
CMK2-R	Medium bore size cylinder	20 to 40	Pull	I-118
LCM-P	Linear slide cylinder	4.5 to 8	Push	II-18
LCM-R	Linear slide cylinder	4.5 to 8	Pull	II-24
SCA2-P	Medium bore size cylinder	40 to 100	Push	I-472
SCA2-R	Medium bore size cylinder	40 to 100	Pull	I-480
SCM-P	Round shaped cylinder	20 to 40	Push	I-266
SCM-R	Round shaped cylinder	20 to 40	Pull	I-272
SCS2-P	Large bore size cylinder	125 to 250	Push	I-640
ST$^{S}_{L}$-$^{M}_{B}$P	Guided cylinder	8 to 80	Push	II-470

Side installation

Series/model series name		Bore size (ø)	Remarks	Page
LCM-A	Linear slide cylinder	4.5 to 8		II-30

Single acting (push/pull) Single rod Double rod Rodless Rotation-stop Fine speed Low speed Low friction Heat resistance Integrated speed controller
High load Back to back Stroke adjustable Side installation Air cushioned/rubber-air cushioned Low hydraulic Position locking Two-stage Scraper Valve
Tandem Metal bush bearing/ball bearing High precision guide Rechargeable battery Clean-room specifications Copper and PTFE free Coolant proof Anti-spatter adherence

Air cushioned/rubber-air cushioned

Series/model series name		Bore size (ø)	Remarks	Page
CMK2-C	Medium bore size cylinder	20 to 40	With air cushion	I-136
CMK2-*C	Medium bore size cylinder	20 to 40	With rubber-air cushion	I-128
MRL2-*C	Magnet rodless cylinder	6 to 32	With rubber-air cushion	I-1740
SCPD3-*C	Pencil shaped cylinder	6 to 16	With rubber-air cushion	I-28
SSD2-K-*C	Compact cylinder	20 to 100	With rubber-air cushion	I-832
SSD-K-*C	Compact cylinder	32 to 100	High load/with rubber-air cushion	I-1150
STG-$^{M}_{B}$-*C	Guided cylinder	32 to 63		II-350
STG-$^{M}_{B}$C	Guided cylinder	16 to 63		II-358
ST$^{S}_{L}$-$^{M}_{B}$-*C	Guided cylinder	32 to 80	With rubber-air cushion	II-486
ST$^{S}_{L}$-$^{M}_{B}$C	Guided cylinder	25 to 80	With air cushion	II-492

Low hydraulic

Series/model series name		Bore size (ø)	Remarks	Page
CMK2-H	Medium bore size cylinder	20 to 40		I-178
JSC3-H	Brake cylinder	40 to 180		II-818
SCA2-H	Medium bore size cylinder	40 to 100		I-568
SCS2-H	Large bore size cylinder	125 to 250		I-662

Position locking

Piston rod can be mechanically held at the stroke end.

Series/model series name		Bore size (ø)	Remarks	Page
CMK2-Q	Medium bore size cylinder	20 to 40		I-142
LCR-Q	Linear slide cylinder	8 to 25		II-84
LCG-Q	Linear slide cylinder	8 to 25		II-164
LCX-Q	Thin linear slide cylinder	25/32		II-264
LCW-Q	Linear slide cylinder	12 to 20		II-224
PCC-Q	Pin clamp cylinder	50		II-1118
SCA2-Q2	Medium bore size cylinder	40 to 100		I-494
SCG-Q	Tie rod cylinder	32 to 100		I-374
SCM-Q	Round shaped cylinder	20 to 100		I-282
SRL3-GQ	Rodless cylinder	12 to 100	With resin guide	I-1614
SRL3-Q	Rodless cylinder	12 to 100		I-1604
SRM3-Q	Rodless cylinder	25 to 63		I-1676
SSD2-Q	Compact cylinder	20 to 100		I-840
SSD-Q	Compact cylinder	16 to 100		I-1160
STG-$^{M}_{B}$Q	Guided cylinder	20 to 63		II-368
ST$^{S}_{L}$-$^{M}_{B}$Q	Guided cylinder	20 to 80		II-500
STR2-$^{M}_{B}$Q	Twin rod cylinder	16 to 32		II-592
UCAC-N	Position locking and lightweight clamp cylinder	32/40		II-1052
USSD	Position locking compact cylinder	20 to 100	High load	II-846
USSD-K	Position locking compact cylinder	20 to 100		II-846
UFCD	Free position locking flat cylinder	25 to 63		II-888
USC	Free position locking medium bore size cylinder	40 to 100		II-904

4 Search by specifications and variation

Two-stage

Two cylinders are integrated in serial and individually controlled.

Series/model series name		Bore size (ø)	Remarks	Page
SCA2-W	Medium bore size cylinder	40 to 100		I-556
SCM-W	Round shaped cylinder	20 to 40		I-322
SCS2-W	Large bore size cylinder	125 to 250		I-658
SSD-W	Compact cylinder	12 to 100		I-1210
SSD2-W	Compact cylinder	12 to 100		I-902

Scraper

The heavy duty scrapers on the piston and guide rods prevent entry of contaminants.

Series/model series name		Bore size (ø)	Remarks	Page
SCG-G	Tie rod cylinder	32 to 100		I-418
SCA2-G	Medium bore size cylinder	40 to 100		I-576
SCS2-G	Large bore size cylinder	125 to 250		I-668
SSD2-G	Compact cylinder	20 to 100		I-936
STG-$^{MG}_{BG1}$	Guided cylinder	20 to 63		II-376
ST$^{S}_{L}$-$^{MG}_{BG1}$	Guided cylinder	20 to 80		II-518
USC-G1	Free position locking medium bore size cylinder	40 to 100		II-904

Valve

Series/model series name		Bore size (ø)	Remarks	Page
CAV2	Cylinder with valve	50 to 100	Double acting/double solenoid/lubrication	I-710
CAV2-N	Cylinder with valve	50 to 100	Double acting/double solenoid/no lubrication	I-710
CAV2-NS	Cylinder with valve/cushioned short overall length	50 to 100	Double acting/double solenoid/no lubrication	I-710
CAV2-S	Cylinder with valve/cushioned short overall length	50 to 100	Double acting/double solenoid/lubrication	I-710
CKV2	Small cylinder with valve	20 to 40	Double acting	I-680
CKV2-M	Small cylinder with valve	20 to 40	Double acting/rotation-stop	I-692
COVN2	Cylinder with valve	50 to 100	Double acting/single solenoid/retracted in when energized/lubrication	I-710
COVN2-N	Cylinder with valve	50 to 100	Double acting/single solenoid/retracted in when energized/no lubrication	I-710
COVN2-NS	Cylinder with valve/cushioned short overall length	50 to 100	Double acting/single solenoid/retracted in when energized/no lubrication	I-710
COVN2-S	Cylinder with valve/cushioned short overall length	50 to 100	Double acting/single solenoid/retracted in when energized/lubrication	I-710
COVP2	Cylinder with valve	50 to 100	Double acting/single solenoid/push out when energized/lubrication	I-710
COVP2-N	Cylinder with valve	50 to 100	Double acting/single solenoid/push out when energized/no lubrication	I-710
COVP2-NS	Cylinder with valve/cushioned short overall length	50 to 100	Double acting/single solenoid/push out when energized/no lubrication	I-710
COVP2-S	Cylinder with valve/cushioned short overall length	50 to 100	Double acting/single solenoid/push out when energized/lubrication	I-710
JSC3-V	Brake cylinder	40 to 100	Double acting/with valve for brake	II-810
JSG-V	Tie rod cylinder with brake	40 to 100	Double acting/with valve for brake release	II-742
JSK2-V	Brake cylinder (small bore size/caulking)	20 to 40	Double acting	II-706
JSM2-V	Brake cylinder (small bore size/disassembling)	20 to 40	Double acting	II-720
SCA2-V	Medium bore size cylinder	40 to 100	Double acting	I-596
SCPD3-V	Pencil shaped cylinder	10/16	Double acting	I-70
SCPS3-V	Pencil shaped cylinder	10/16	Single acting	I-70
ST$^{S}_{L}$-$^{M}_{B}$V	Guided cylinder	20 to 80	Double acting	II-544
ULK-V	Brake cylinder	20 to 40	Double acting	II-680

Single acting (push/pull) Single rod Double rod Rodless Rotation-stop Fine speed Low speed Low friction Heat resistance Integrated speed controller
High load Back to back Stroke adjustable Side installation Air cushioned/rubber-air cushioned Low hydraulic Position locking Two-stage Scraper Valve
Tandem Metal bush bearing/ball bearing High precision guide Rechargeable battery Clean-room specifications Copper and PTFE free Coolant proof Anti-spatter adherence

Tandem

Two air cylinders connected in serial output double force.

Series/model series name		Bore size (ø)	Remarks	Page
SCM-W4	Round shaped cylinder	20 to 40		I-328

Metal bush bearing/ball bearing

Series/model series name		Bore size (ø)	Remarks	Page
STG-$^{M}_{B}$	Guided cylinder	12 to 80		II-336
STG-$^{M}_{B}$ -*C	Guided cylinder	32 to 63	With rubber-air cushion	II-350
STG-$^{M}_{B}$ C	Guided cylinder	16 to 63	With air cushion	II-358
STG-$^{M}_{B}$ Q	Guided cylinder	20 to 63	Position locking	II-368
STG-$^{M}_{B}$ G	Guided cylinder	20 to 63	Rubber scraper	II-376
STG-$^{M}_{B}$ G1	Guided cylinder	20 to 63	Coil scraper	II-376
STG-$^{MG2}_{MG3}$	Guided cylinder	20 to 63	Coolant proof	II-382
STG-$^{M}_{BG4}$	Guided cylinder	40 to 63	Anti-spatter adherence	II-388
STG-MG5	Guided cylinder	20 to 100	Metal bush bearing	II-394
STM-$^{M}_{B}$	Guided cylinder	6/10		II-314
ST$^{S}_{L}$-$^{M}_{B}$C	Guided cylinder	25 to 80	With air cushion	II-492
ST$^{S}_{L}$-$^{M}_{B}$ -*C	Guided cylinder	32 to 80	With rubber-air cushion	II-486
ST$^{S}_{L}$-$^{MG}_{BG1}$	Guided cylinder	20 to 80	Scraper	II-518
ST$^{S}_{L}$-$^{M}_{B}$P	Guided cylinder	8 to 80	Adjustable stroke type/push	II-470
ST$^{S}_{L}$-$^{M}_{B}$T2	Guided cylinder	12 to 80	Packing material fluoro rubber	II-480
ST$^{S}_{L}$-$^{M}_{B}$T	Guided cylinder	12 to 80	Heat resistance	II-476
ST$^{S}_{L}$-$^{M}_{B}$O	Guided cylinder	8 to 80	Low speed	II-514
ST$^{S}_{L}$-$^{M}_{B}$V	Guided cylinder	20 to 80	Valve equipped	II-544
ST$^{S}_{L}$-$^{M}_{B}$	Guided cylinder	8 to 80		II-448
ST$^{S}_{L}$-$^{M}_{B}$Q	Guided cylinder	20 to 80	Position locking	II-500
STR2-$^{M}_{B}$O	Twin rod cylinder	6 to 32	Low speed	II-602
STR2-$^{M}_{B}$	Twin rod cylinder	6 to 32		II-580
STR2-$^{M}_{B}$Q	Twin rod cylinder	16 to 32	Position locking	II-592
STR2-$^{M}_{B}$D	Twin rod cylinder	6 to 32	Double acting/double rod	II-612
UCA2	Unit cylinder	10 to 32	Metal bush bearing	II-640
UCA2-B	Unit cylinder	10 to 32	Ball bearing	II-650

High precision guide

Series/model series name		Bore size (ø)	Remarks	Page
LCR	Linear slide cylinder	6 to 25		II-58
MSDG-L	Small compact cylinder	6 to 16		I-1452
SRG3	Rodless cylinder	12 to 25		I-1650
SRM3	Rodless cylinder	25 to 63		I-1676

4 Search by specifications and variation

Specifications for rechargeable battery

Pneumatic components exclusively for materials which can be used in the rechargeable battery manufacturing process.

Series/model series name		Bore size (ø)	Remarks	Page
BHA -P4*	Compact cross roller parallel hand	12 to 25		CC-1226A Refer to "Components for rechargeable battery production P4* Series" catalog.
BHE -P4*	Centering hand	12 to 32		
BHG -P4*	Compact cross roller parallel hand (with rubber cover)	12 to 25		
CKG-G -P4*	3-way jaw bearing chuck (with rubber cover)	16 to 50		
CKL2 -P4*	Powerful chuck	20 to 100		
CKLB2 -P4*	2-way powerful chuck	20 to 100		
CMK2 -P4*	Medium bore size cylinder	20 to 40		
FC* -P4*	Flat cylinder	25 to 63		
FCK -P4	Shock absorber	-		
FJ -P4	Floating fitting	-		
FK -P40	Simplified floating fitting	-		
GRC -P4*	Table rotary actuator	-		
HAP -P4*	Parallel hand	15 to 40		
HCP -P4*	Lateral parallel hand	12 to 20		
HKP-G -P4*	Cross roller parallel hand (with rubber cover)	32 to 63		
HLBG -P4*	Bearing thin parallel hand (with rubber cover)	12 to 20		
HLC -P4*	Thin long stroke parallel hand	8 to 30		
HLD -P4*	Ultra thin parallel hand	12 to 20		
HMD -P4*	Thin wide angle hand	16, 25		
HMF -P4*	Compact wide parallel hand	12 to 40		
HRL-1 -P4	Guided cylinder (single axis unit)	20 to 63		
LCG -P4*	Linear slide cylinder	6 to 25		
LCR -P4*	Linear slide cylinder	6 to 25		
LCX -P4*	Linear slide cylinder	25, 32		
LHAG -P4*	Linear guide hand (with rubber cover)	12 to 32		
MDC2 -P4*	Small direct mounting cylinder	6 to 10		
MRG2 -P4	High precision guided magnet rodless cylinder	10 to 25		
MRL2 -P4*	Magnet rodless cylinder	6 to 32		
MSD -P4*	Small compact cylinder	6 to 16		
MSDG -P4*	Small guided compact cylinder	6 to 16		
MVC -P4*	Small cylinder with suction pad	6, 10		
NCK -P4*	Shock absorber	-		

Specifications for rechargeable battery

Pneumatic components exclusively for materials which can be used in the rechargeable battery manufacturing process.

Series/model series name		Bore size (ø)	Remarks	Page
SCG -P4*	Tie rod cylinder	32 to 100		CC-1226A Refer to "Components for rechargeable battery production P4* Series" catalog.
SCM -P4*	Round shaped cylinder	20 to 100		
SCPD3 -P4*	Pencil shaped cylinder	6 to 16		
SCS2-N -P4	Large bore size cylinder	125 to 250		
SFR/SFRT -P4	Fine speed fan rotary actuator	-		
SMG -P4*	Compact cylinder	6 to 32		
SMD2 -P4*	Compact cylinder	6 to 32		
SRL3 -P4*	Rodless cylinder	12 to 100		
SRM3 -P4*	Rodless cylinder with high precision guide	25 to 63		
SSD -P4*	Compact cylinder	12 to 160		
SSD2 -P4*	Compact cylinder	12 to 200		
SSG -P4*	Guided super compact cylinder	12 to 100		
STG-B/M -P4*	Guided cylinder	12 to 80		
STK -P4*	Stopper cylinder	25 to 50		
STR2 -P4*	Twin rod cylinder	6 to 32		
UCA2 -P4*	Unit cylinder	10 to 32		
USSD -P4*	Position locking compact cylinder	20 to 100		

4 Search by specifications and variation

Clean-room specifications

Anti-dust generation pneumatic components usable in clean rooms.

Series/model series name		Bore size (ø)	Remarks	Page
GRC -P72/P53	Table rotary actuator	Torque size 5 to 80		Refer to "Components for clean room specifications" in catalog No. CB-033SA.
LCR -P7*/P5*	Linear slide cylinder	6 to 25		
LCG -P7*	Linear slide cylinder	6 to 25		II-172
LCM -P73	Linear slide cylinder	4.5 to 8		II-40
LCX -P7*	Thin linear slide cylinder	25/32		II-270
MRL2 -P7*/P5*	Rodless cylinder (magnet)	6 to 32		Refer to "Components for clean room specifications" in catalog No. CB-033SA.
MDC2 - P7*/P5*	Small direct mounting cylinder	6 to 10		
SCM - P7*/P5*	Round shaped cylinder	20 to 100		
SCPD3 - P7*/P5*	Pencil shaped cylinder	6 to 16		
SMD2 - P7*/P5*	Compact cylinder	6 to 32		
SSD2 - P7*/P5*	Compact cylinder	12 to 160		I-1036
SSD - P7*/P5*	Compact cylinder	16 to 160		Refer to "Components for clean room specifications" in catalog No. CB-033SA.
STG - B - P72/P73	Guided cylinder	12 to 63		II-404
STM - B - P7*	Guided cylinder	6/10		II-320
ST$^{S}_{L}$-B-P7*/P5*	Guided cylinder	8 to 80		Refer to "Components for clean room specifications" in catalog No. CB-033SA.
STR2-$^{M}_{B}$-P7*/P5*	Twin rod cylinder	6 to 32		
SMG-P7*/P5*	Compact cylinder	6 to 25		

Copper and PTFE free

Pneumatic components for cathode ray tube manufacturing lines.

Series/model series name		Bore size (ø)	Remarks	Page
CKV2 -P6	Small cylinder	20 to 40		I-680
CMK2 -P6	Medium bore size cylinder	20 to 40		I-86
FC* -P6	Flat compact cylinder	25 to 63		I-1480
FJ	Floating joint	-	Copper and PTFE free as standard	II-1948
HRL-1*	Hybrid robot	20 to 63	Copper and PTFE free as standard	II-1452
MRL2	Rodless cylinder (magnet)	6 to 32	Copper and PTFE free as standard	I-1740
RRC -P6	Rotary actuator (rack and pinion mechanism)	-	Effective torque 0.7, 3, 1, 5.6 N•m	II-1286
SCA2 -P6	Medium bore size cylinder	40 to 100		I-450
SCG-P6	Tie rod cylinder	32 to 100		I-358
SCM -P6	Round shaped cylinder	20 to 100		I-232
SCP*3	Pencil shaped cylinder	6 to 16	Copper and PTFE free as standard	I-8
SCS2 -P6	Large bore size cylinder	125 to 250		I-626
SRL3 -P6	Rodless cylinder	12 to 100		I-1574
SSD2-P6	Compact cylinder	12 to 100	ø12 to ø50 Copper and PTFE free as standard	I-752
SSD -P6	Compact cylinder	12 to 100	ø12 to ø50 Copper and PTFE free as standard	I-1094
STG-$^{M}_{B}$-P6	Guided cylinder	12 to 80		II-336
ST$^{S}_{L}$-$^{M}_{B}$-P6	Guided cylinder	8 to 80		II-448
STR2-$^{M}_{B}$-P6	Twin rod cylinder	6 to 32		II-580

Single acting (push/pull) Single rod Double rod Rodless Rotation-stop Fine speed Low speed Low friction Heat resistance Integrated speed controller
High load Back to back Stroke adjustable Side installation Air cushioned/rubber-air cushioned Low hydraulic Position locking Two-stage Scraper Valve
Tandem Metal bush bearing/ball bearing High precision guide Rechargeable battery Clean-room specifications Copper and PTFE free Coolant proof Anti-spatter adherence

Coolant proof product

Pneumatic components with a special structure with outstanding oil and water resistance.

Series/model series name		Bore size (ø)	Remarks	Page
CMK2-G $^{2}_{3}$	Medium bore size cylinder	20 to 40		I-182
CMK2-JG $^{2}_{3}$	Small bore size cylinder/stainless steel	20 to 40		I-188
SCA2-G $^{2}_{3}$	Medium bore size cylinder	40 to 100		I-584
SCG-G $^{2}_{3}$	Tie rod cylinder	40 to 100		I-424
SSD2-G $^{2}_{3}$	Compact cylinder	16 to 100		I-946
SSD2-KG $^{2}_{3}$	Compact cylinder high load	16 to 100		I-956
SSD-G $^{2}_{3}$	Compact cylinder	16 to 100		I-1230
SSD-KG $^{2}_{3}$	Compact cylinder high load	16 to 100		I-1238
STG-$^{MG2}_{MG3}$	Guided cylinder	20 to 63		II-382
ST$^{S}_{L}$-$^{M}_{B}$G $^{2}_{3}$	Guided cylinder	20 to 80		II-526

Anti-spatter adherence

Pneumatic cylinder with a structure preventing spatter adherence from welding.

Series/model series name		Bore size (ø)	Remarks	Page
CAC4-G4	Clamp cylinder	40 to 80		II-1020
RCS2-G4	Rotary clamp cylinder	32 to 63		II-1084
RCC2-G4	Rotary clamp cylinder	20 to 63		II-1108
SCA2-$^{G1}_{G4}$	Medium bore size cylinder	40 to 100		I-590
SCG-G4	Tie rod cylinder	32 to 100		I-430
SSD2-$^{G1}_{G4}$	Compact cylinder	25 to 100		I-966
SSD2-K$^{G1}_{G4}$	Compact cylinder high load	25 to 100		I-974
SSD2-D$^{G1}_{G4}$	Compact cylinder double rod	25 to 100		I-984
SSD-$^{G1}_{G4}$	Compact cylinder	32 to 100		I-1246
SSD-K$^{G1}_{G4}$	Compact cylinder high load	32 to 100		I-1254
SSD-D$^{G1}_{G4}$	Compact cylinder double rod	32 to 80		I-1264
STG-$^{M}_{B}$G4	Guided cylinder	40 to 63		II-388
ST$^{S}_{L}$-$^{MG1}_{BG4}$	Guided cylinder	40 to 80		II-536

Environment-resistant scraper NEW

Pneumatic cylinder suitable for use in an environment containing ceramic fine powder and metal fine powder.

Series/model series name		Bore size (ø)	Remarks	Page
SSD2-G5	Compact cylinder	20 to 100		I-992
SSD2-KG5	Compact cylinder high load	20 to 100		I-1002
STG-MG5	Guided cylinder	20 to 100		II-394

System selection

Even beginners can easily make a model selection.

How to make a system selection

An overview of the selection is available
with the following two conditions.

1 When selecting peripheral pneumatic components, having determined cylinder bore size and operation speed

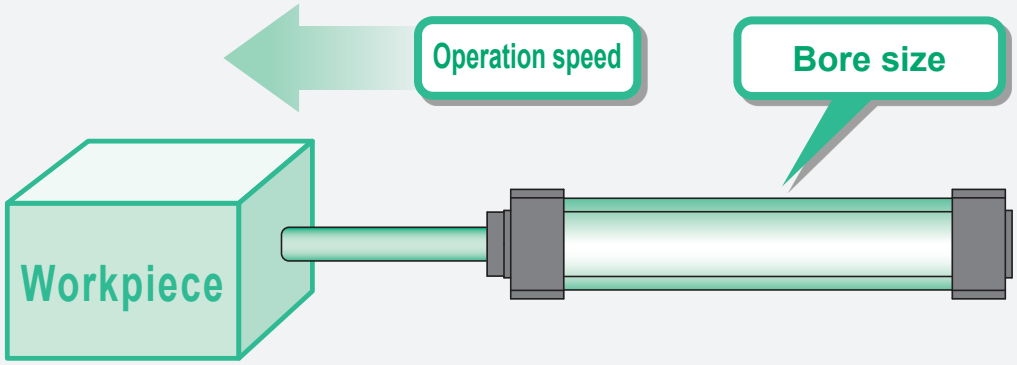

To Intro Page 50

2 When selecting peripheral pneumatic components, having determined bore size from cylinder load and operating time

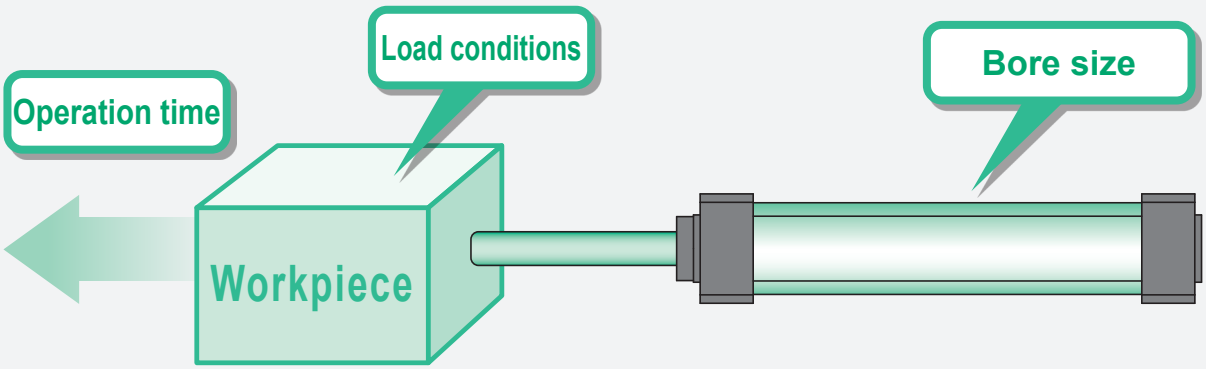

To Intro Page 61

1 Selecting from cylinder bore size and operation speed

STEP 1

[Confirming conditions]
Check cylinder tube bore size and cylinder operation speed

Select the theoretical reference speed

From Table 1

Whether the cylinder bore size and cylinder being used are driven with relative high or low speed is determined as a condition.

Using Table 1 as a reference, select the theoretical reference speed of the cylinder.

(1) Bore size ø□
(2) Operation speed Low speed/medium speed/ high speed/ultra-high speed

STEP 2

Select appropriate fluid control components from bore size and theoretical reference speed, and select [required flow rate]

From to Table 2

Refer to Table 2 and select appropriate fluid control components (valve, speed controller, silencer, piping) and [required flow rate] for corresponding cylinder bore size and theoretical reference speed.

STEP 3

Select the clean air system components

From to Table 3

Refer to Table 3, and select a component with a [max. flow rate] higher than the [Required flow rate] value.
When controlling multiple cylinders with a set of clean air system components, select the clean air system component having a [max. flow rate] higher than the [total of required flow rates].

* The relationship of the cylinder bore size and speed for the valve (4G Series/4K Series) is shown in a graph.
"A combination of the valve and the cylinder's standard system" (Example) Intro Pages 59 to 60

(1) The cylinder average speed is obtained from the combination of the valve and piping system. It is expressed as the cylinder's piston speed calculated by dividing the stroke by the time that the piston rod takes from start to end of movement with the cylinder rod installed facing upward. When the load factor is 50%, the average speed should be approximately the cylinder's piston speed multiplied by 0.5. (Refer to Intro Page 63 for the relation of load factor and theoretical reference speed.)
(2) The cylinder theoretical reference speed is the value of when one cylinder moves independently.
(3) The valve's effective cross-sectional area used in the calculation for Table 2 is the 2-position value.
(4) This selection guide is for reference. With the CKD sizing program, confirm conditions to be actually used.

System selection

STEP1 Conditions confirmation/theoretical reference speed selection

As a condition, it is predetermined whether bore size and cylinder are to be operated at a relatively high speed or at a relatively low speed.

Table 1

Degree of cylinder speed	Low speed	Medium speed	High speed	Ultra high speed
Theoretical reference speed (mm/s)	250	500	750	1,000

STEP2 Fluid control components selection

Select appropriate fluid control components (valve, speed controller, silencer, piping) and [required flow rate] for bore size and theoretical reference speed selected from Table 1.

Table 2

Bore size (mm)	Theoretical reference speed (mm/s) Note)	Required flow rate (L/min) (ANR)	Required composite effective cross-sectional area (mm^2)	Valve Single solenoid
ø6	500	5	0.1	MN4E010 4SA010/4SB010
ø10	500	14	0.2	MN4E010 4SA010/4SB010
ø16	500	36	0.5	MN4E010 4SA010/4SB010
ø20	250	29	0.5	4KA110/4KB110 4GA110R/4GB110R
	500	56	0.9	4KA110/4KB110
	750	84	1.4	4GA110R/4GB110R
	1,000	112	1.8	
ø25	250	44	0.8	4KA110/4KB110
	500	88	1.4	4GA110R/4GB110R
	750	132	2.1	4KB110/4GB110R
	1,000	175	2.8	4KB210/4GB210R
ø32	250	73	1.3	4KA110/4KB110 4GA110R/4GB110R
	500	143	2.9	4KA210/4KB210
	750	215	3.5	4GA210R/4GB210R
	1,000	286	4.6	

Note) The above table indicates theoretical reference speed at cylinder bore size.
Refer to the individual specifications of each model for the working piston speed range.

*1: Refer to Intro Page 67 for piping specifications.

Suitable control components				
		Pneumatic auxiliary components		Piping *1
	Double solenoid	Speed controller	Silencer	Piping (between valve and cylinder)
	MN4E020 4SA020/4SB020	SC3W-M5-4 DSC-C-M5-4	SLM-M5,SLM-M3	ø4 x ø2.5 nylon tube
	MN4E020 4SA020/4SB020	SC3W-M5-4 DSC-C-M5-4	SLM-M5,SLM-M3	ø4 x ø2.5 nylon tube
	MN4E020 4SA020/4SB020	SC3W-M5-4 DSC-C-M5-4	SLM-M5,SLM-M3	ø4 x ø2.5 nylon tube
	4KA120/4KB120 4GA120R/4GB120R	SC3W-6-6/SCL2-06-H66 DSC-(C)-6-6/DSC-S1-06-H66	SLM-M5,SLW-6A	ø6 x ø4 nylon tube
	4KA120/4KB120 4GA120R/4GB120R	SC3W-6-6 DSC-(C)-6-6 SCL2-06-H66 DSC-S1-06-H66	SLM-M5,SLW-6A	ø6 x ø4 nylon tube
	4KA120/4KB120 4GA120R/4GB120R	SC3W-6-6 DSC-(C)-6-6 SCL2-06-H66 DSC-S1-06-H66	SLM-M5,SLW-6A	ø6 x ø4 nylon tube
	4KB120/4GB120R	SC1-6 SCL2-08-H88 DSC-S1-08-H88	SLW-6A,SL-M5	ø8 x ø5.7 nylon tube
	4KB220/4GB220R		SLW-6S,SLW-6A	ø8 x ø5.7 nylon tube
	4KA120/4KB120 4GA120R/4GB120R	SC3W-6-6/SCL2-06-H66 DSC-(C)-6-6/DSC-S1-06-H66	SLM-M5,SLW-6A	ø6 x ø4 nylon tube
	4KA220/4KB220 4GA220R/4GB220R	SC1-6 SCL2-08-H88 DSC-S1-08-H88	SLW-6S,SLW-6A	ø8 x ø5.7 nylon tube

System selection

Bore size (mm)	Theoretical reference speed (mm/s) Note)	Required flow rate (L/min) (ANR)	Required composite effective cross-sectional area (mm^2)	Valve Single solenoid
ø40	250	110	1.7	
	500	230	3.3	4KA210/4KB210 4GA210R/4GB210R
	750	340	5.0	
	1,000	450	6.6	
ø50	250	180	2.6	4KA210/4KB210 4GA210R/4GB210R
	500	350	5.2	
	750	530	7.7	4GA310R/4GB310R
	1,000	710	10.4	4GA310R/4GB310R 4F310/4F410
ø63	250	280	4.1	4KA210/4KB210 4GA310R/4GB310R
	500	560	8.2	4GA310R/4GB310R
	750	840	12.3	4KA310/4KB310 4F310/4F410
	1,000	1,100	16.4	4F510
ø80	250	450	6.6	4KB210/4F210-08
	500	910	13.2	4F410-10/4F310-10 4KB310-10
	750	1,400	19.8	4KB410-15 4F510-15
	1,000	1,800	26.4	
ø100	250	710	10.3	4GA410-10/4GB410-10 4F410-10/4F310-10 4KB310-10
	500	1,400	20.6	4GB410-15 4KB410-15/4F510-15
	750	2,100	30.9	
	1,000	2,800	41.2	4F610-20

Note) The above table indicates theoretical reference speed at cylinder bore size.
Refer to the individual specifications of each model for the working piston speed range.

*1: Refer to Intro Page 67 for piping specifications.

Suitable control components			
	Pneumatic auxiliary components		Piping *1
Double solenoid	Speed controller	Silencer	Piping (between valve and cylinder)
	SC3W-6-6 SCL2-06-H66 DSC-(C)-6-6 DSC-S1-06-H66	SLM-M5,SLW-6A	ø6 x ø4 nylon tube
4KA220/4KB220 4GA220R/4GB220R	SC1-6 SCL2-08-H88 DSC-8-8 DSC-S1-08-H88	SLW-6S,SLW-6A	ø8 x ø5.7 nylon tube
	SC1-8	SLW-8A,SLW-6A	ø10 x ø7.2 nylon tube
	SC1-8	SLW-8A,SLW-8S	ø10 x ø7.2 nylon tube
4KA220/4KB220 4GA220R/4GB220R	SC1-6 SCL2-08-H88 DSC-S1-08-H88	SLW-6A,SLW-6S	ø8 x ø5.7 nylon tube
	SC1-8 SCL2-10-H1010 DSC-S1-10-H1010	SLW-8A,SLW-6A	ø10 x ø7.2 nylon tube
4GA320R/4GB320R		SLW-8A,SLW-8S	ø10 x ø7.2 nylon tube
4GA320R/4GB320R 4F320/4F420	SC1-10	SLW-10A	ø15 x ø11.5 nylon tube or Rc3/8 steel pipe
4KA220/4KB220 4GA320R/4GB320R	SC1-6 SCL2-08-H88 DSC-S1-08-H88	SLW-6S,SLW-6A	ø8 x ø5.7 nylon tube
4GA320R/4GB320R	SC1-8 SCL2-10-H1010 DSC-S1-10-H1010	SLW-8A,SLW-8S	ø10 x ø7.2 nylon tube
4KA320/4KB320 4F320/4F420	SC1-10	SLW-10A	ø15 x ø11.5 nylon tube or Rc3/8 steel pipe
4F520	SC1-15	SLW-15A	Rc1/2 steel pipe
4KB220/4F220-08	SC1-8 SCL2-10-H1010 DSC-S1-10-H1010	SLW-8A,SLW-8S	ø10 x ø7.2 nylon tube
4F420-10/4F320-10 4KB320-10	SC1-10	SLW-10A	ø15 x ø11.5 nylon tube or Rc3/8 steel pipe
4KB420-15 4F520-15	SC1-15	SLW-15A	Rc1/2 steel pipe
	SC-20A	SLW-15A	Rc1/2 steel pipe
4GA420-10/4GB420-10 4F420-10/4F320-10 4KB320-10	SC1-10	SLW-10A	ø15 x ø11.5 nylon tube or Rc3/8 steel pipe
4GB420-15 4KB420-15/4F520-15	SC1-15	SLW-15A	Rc1/2 steel pipe
	SC-20A	SLW-15A	Rc1/2 steel pipe
4F620-20	SC-20A	SL-20A,SLW-20S	Rc3/4 steel pipe

System selection

Bore size (mm)	Theoretical reference speed (mm/s) Note)	Required flow rate (L/min) (ANR)	Required composite effective cross-sectional area (mm^2)	Valve Single solenoid	
ø125	250	1,100	16.1	4GB410-15 4KB410-15/4F510-15	
	500	2,200	32.2		
	750	3,300	48.2	4F610-20	
	1,000	4,400	64.4		
ø140	250	1,400	20.2	4GB410-15 4KB410-15/4F510-15	
	500	2,800	40.4	4F610-20	
	750	4,200	60.5		
	1,000	5,500	80.8	4F710-25	
ø160	250	1,800	26.3	4GB410-15 4KB410-15/4F510-15	
	500	3,600	52.6	4F610-20	
	750	5,400	79.0	4F710-20	
	1,000	7,200	104.7	-	
ø180	250	2,300	33.3	4KB410-15 4F510-15	
	500	4,600	66.6	4F710-20	
	750	6,900	100.0	4F710-25	
	1,000	9,200	132.5	-	
ø200	250	2,800	41.2	4F610-20	
	500	5,600	82.4	4F710-25	
	750	8,400	122.7	-	
	1,000	11,200	163.6	-	
ø250	250	4,400	64.3	4F710-20	
	400	7,000	103.0	4F710-25	
	750	13,200	191.7	-	
	1,000	17,600	255.6	-	

*1: Refer to Intro Page 67 for piping specifications.

Suitable control components			
	Pneumatic auxiliary components		Piping *1
Double solenoid	Speed controller	Silencer	Piping (between valve and cylinder)
4GB420-15 4KB420-15/4F520-15	SC1-15	SLW-15A	Rc1/2 steel pipe
	SC-20A	SLW-15A	Rc1/2 steel pipe
4F620-20	SC-20A	SL-20A,SLW-20S	Rc3/4 steel pipe
	SC-20A	SL-20A	Rc3/4 steel pipe
4GB420-15 4KB420-15/4F520-15	SC1-15	SLW-15A	Rc1/2 steel pipe
4F620-20	SC-20A	SL-20A,SLW-20S	Rc3/4 steel pipe
		SL-20A	Rc3/4 steel pipe
4F720-25	SC-20A	SL-25A	Rc1 steel pipe
4GB420-15 4KB420-15/4F520-15	SC-20A	SLW-15A	Rc1/2 steel pipe
4F620-20	SC-20A	SL-20A	Rc3/4 steel pipe
4F720-20	SC-20A	SL-20A	Rc3/4 steel pipe
-	-	-	-
4KB420-15 4F520-15	SC-20A	SLW-15A	Rc1/2 steel pipe
4F720-20	SC-20A	SL-20A	Rc3/4 steel pipe
4F720-25	SC-25A	SL-25A	Rc1 steel pipe
-	-	-	-
4F620-20	SC-20A	SL-20A,SLW-20S	Rc3/4 steel pipe
4F720-25	SC-25A	SL-25A	Rc1 steel pipe
-	-	-	-
-	-	-	-
4F720-20	SC-20A	SL-20A	Rc3/4 steel pipe
4F720-25	SC-25A	SL-25A	Rc1 steel pipe
-	-	-	-
-	-	-	-

System selection

STEP 3 Clean air system components selection

Select a component with a max. flow rate equal to or higher than the [required flow rate] value in Table 2.
When controlling multiple cylinders with a single set of clean air system components, select the clean air system component with [max. flow rate] higher than [total required flow rates].

Table 3

F.R.L kit			F.R. unit		
Model No.	Port size	Max flow L/min (Atm press conv value)	Model No.	Port size	Max flow L/min (Atm press conv value)
C1000-6-W	Rc1/8	450	W1000-6-W	Rc1/8	800
C1000-8-W	Rc1/4	630	W1000-8-W	Rc1/4	1,150
C2000-8-W	Rc1/4	1,200	W2000-8-W	Rc1/4	1,500
C2000-10-W	Rc3/8	1,700	W2000-10-W	Rc3/8	2,000
C2500-8-W	Rc1/4	1,200	W3000-8-W	Rc1/4	2,150
C2500-10-W	Rc3/8	1,700	W3000-10-W	Rc3/8	2,430
C3000-8-W	Rc1/4	1,280	W4000-8-W	Rc1/4	2,500
C3000-10-W	Rc3/8	1,750	W4000-10-W	Rc3/8	4,350
C4000-8-W	Rc1/4	1,430	W4000-15-W	Rc1/2	4,750
C4000-10-W	Rc3/8	2,400	W8000-20-W	Rc3/4	10,000
C4000-15-W	Rc1/2	3,000	W8000-25-W	Rc1	10,000
C6500-20-W	Rc3/4	4,500	B7019-1C	Rc1/8	500
C6500-25-W	Rc1	5,000	B7019-2C	Rc1/4	900
C8000-20-W	Rc3/4	7,000			
C8000-25-W	Rc1	7,500			
K60570-1C-GB	Rc1/8	200			
K60570-2C-GB	Rc1/4	300			

Explanation of technical terms

[Theoretical reference speed]: indicates degree of cylinder speed, expressed as the following formula.
(This value coincides with speed at no load. When load is applied, speed drops considerably.)

$$VO = 1920 \times \frac{S}{A} = 2445 \times \frac{S}{D^2} \quad \text{—(1)}$$

VO: Theoretical reference speed (mm/s)
A: Cylinder sectional area (cm^2)
S: Composite effective cross-sectional area of circuit (exhaust air side) (mm^2)
D: Cylinder bore size (cm)

When expressed as a graph, the theoretical reference speed is the speed within the range where the cylinder moves at a uniform speed

$$VO = \frac{\ell}{t3} \text{ (mm/s)}$$

t1: Time until movement starts
t2: Time of primary delay
t3: Operating time with constant velocity
ℓ: Stroke

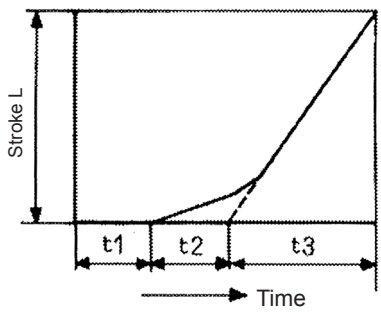

* Note/t1 and t2 differ depending on load. At no load, this can be ignored to no ill effect.

■ F.R.L. kit, unit, regulator
Primary pressure 0.7 MPa, set pressure 0.5 MPa, pressure drop 0.1 MPa

■ Air filter
Primary pressure 0.7 MPa, pressure drop 0.02 MPa

■ Lubricator
Primary pressure 0.5 MPa, pressure drop 0.03 MPa

Air filter (F)			Regulator (R)			Lubricator (L)		
Model No.	Port size	Max flow ℓ/min (Atm press conv)	Model No.	Port size	Max flow ℓ/min (Atm press conv)	Model No.	Port size	Max flow ℓ/min (Atm press conv)
F1000-6-W	Rc1/8	460	R1000-6-W	Rc1/8	770	L1000-6-W	Rc1/8	550
F1000-8-W	Rc1/4	610	R1000-8-W	Rc1/4	1,350	L1000-8-W	Rc1/4	700
F2000-8-W	Rc1/4	1,300	R2000-8-W	Rc1/4	1,750	L3000-8-W	Rc1/4	1,100
F2000-10-W	Rc3/8	1,700	R2000-10-W	Rc3/8	2,500	L3000-10-W	Rc3/8	2,250
F3000-8-W	Rc1/4	1,230	R3000-8-W	Rc1/4	2,000	L4000-8-W	Rc1/4	1,000
F3000-10-W	Rc3/8	1,500	R3000-10-W	Rc3/8	2,600	L4000-10-W	Rc3/8	1,700
F4000-8-W	Rc1/4	1,320	R4000-8-W	Rc1/4	2,500	L4000-15-W	Rc1/2	2,700
F4000-10-W	Rc3/8	2,140	R4000-10-W	Rc3/8	4,400	L8000-20-W	Rc3/4	6,300
F4000-15-W	Rc1/2	3,000	R4000-15-W	Rc1/2	5,000	L8000-25-W	Rc1	10,000
F6000-20-W	Rc3/4	5,600	R6000-20-W	Rc3/4	7,000	A3019-1C	Rc1/8	100
F6000-25-W	Rc1	6,200	R6000-25-W	Rc1	7,700	A3019-2C	Rc1/4	400
F8000-20-W	Rc3/4	6,400	R8000-20-W	Rc3/4	14,000	3003E-6C	Rc3/4	3,500
F8000-25-W	Rc1	6,800	R8000-25-W	Rc1	11,000	3003E-8C	Rc1	4,000
A1019-1C	Rc1/8	550	B2019-1C	Rc1/8	500			
A1019-2C	Rc1/4	700	B2019-2C	Rc1/4	500			
1138-6C-E	Rc3/8	5,500	2215-6C	Rc3/4	14,000			
1138-8C-E	Rc1	7,000	2215-8C	Rc1	14,000			
			2215-10C	Rc1 1/4	14,000			

[Required flow rate]: indicates instantaneous flow rate for operating a cylinder with velocity v_O, expressed with the following formula. Values in the table are when P = 0.5 MPa. The required flow rate is a value necessary to select clean air system components.

$$Q \approx \frac{Av_O(P+0.101)\times 60}{0.101\times 10^4} \quad \text{—(2)}$$

Q: Required flow rate (ℓ/min) (ANR)
P: Supply pressure (MPa)

[Required effective sectional area]: indicates composite effective cross-sectional area for the exhaust circuit required for moving the cylinder at speed v_O.
(Composite effective cross-sectional area of valve, speed controller, silencer or piping)

[Proper standard system]: indicates the most appropriate combination of valve, speed controller, silencer and bore size for operating a cylinder with velocity v_O. The combination in the table is for a pipe length of 1 m.

System selection

A combination of the valve and the cylinder's standard system (example)

(1) The cylinder average speed is obtained from the combination of the valve and piping system. It is expressed as the cylinder's piston speed calculated by dividing the stroke by the time that the piston rod takes from start to end of movement with the cylinder rod installed facing upward. When the load factor is 50%, the average speed should be approximately the cylinder's piston speed multiplied by 0.5. (Refer to Intro Page 61 for the relation of load factor and theoretical reference speed.)

(2) The cylinder's average speed is that when one cylinder is operated independently.

(3) The effective cross-sectional area of the solenoid valve used for the calculation below is the 2-position value.

(4) This selection guide is for reference. Check the selection with actual conditions using a sizing program.

(5) Graph for the 4G and 4K Series valve (2-position single, base piping) is shown as an example.

4G Series

(With internal exhaust check valve)

(Example) The connection component system No. is ❷ for the 4G1 with a C6 port size.

Series	Base piping						System No.
	Model No.	Solenoid valve Port size	Speed Controller	Silencer	Piping(1m)	Composite effective cross-sectional area (mm^2) Pipe length (1 m)	
4G1	M4GB110R	C4	SC3W-6-4	SLW-6S	ø4 x ø2.5	1.4	❶
	M4GB110R	C6	SC1-6	SLW-6S	ø6 x ø4	2.8	❷
4G2	M4GB210R	C6	SC1-8	SLW-8S	ø6 x ø4	4.5	❸
	M4GB210R	C8	SC1-10	SLW-8S	ø8 x ø5.7	6.7	❹
4G3	M4GB310R	C10	SC1-10	SLW-10L	ø10 x ø7.2	10.1	❺
	M4GB310R	C10	SC1-15	SLW-10L	ø12 x ø8.9	11.5	❻

* The system No. is indicated in the following graph.

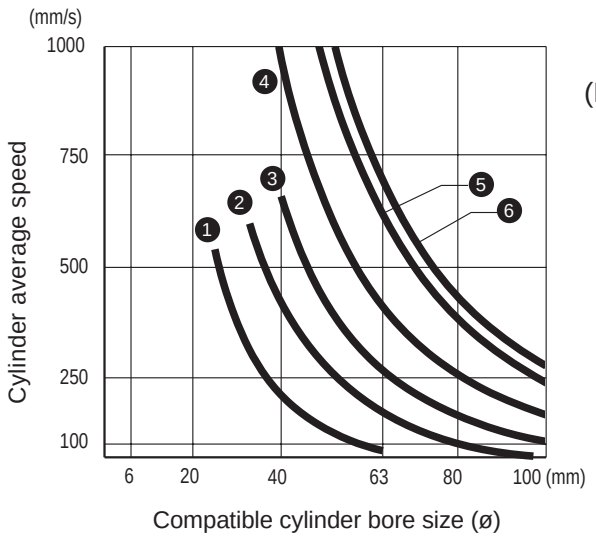

(Example) When using system ❷ with ø40 cylinder diameter, the cylinder's average speed is about 450 mm/s. (Note that this differs with working conditions.)

MN4G Series

(With internal exhaust check valve)

Series	Solenoid valve port size	Speed controller	Piping (1 m)	Common exhaust piping	Composite effective X-sectional area (mm²)	System No.
MN4G1	C4	SC3W-M5-4	ø4xø2.5	ø6xø4x3 m	0.9	❶
	C4	SC3W-6-4	ø4xø2.5	ø6xø4x3 m	1.4	❷
	C6	SC1-6	ø6xø4	ø8xø5.7x3 m	2.8	❸
MN4G2	C6	SC1-6	ø6xø4	ø8xø5.7x3 m	3.8	❹
	C8	SC1-8	ø8xø5.7	ø10xø7.2x3 m	6.0	❺

* The system No. is indicated in the following graph.
* This graph applies to common exhaust.

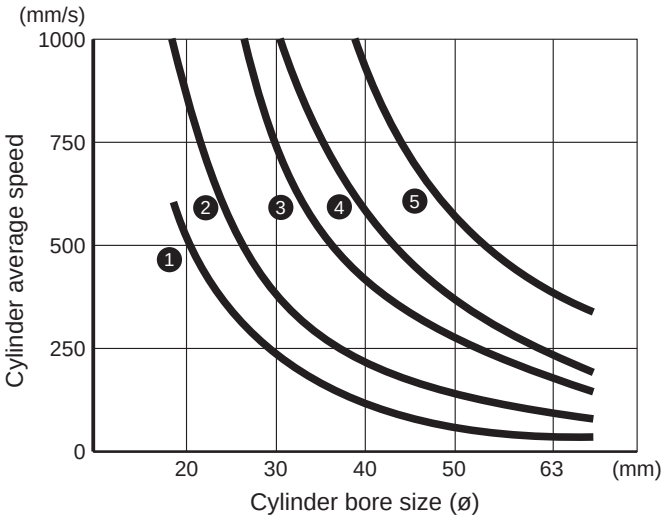

4K Series

Series	Solenoid valve port size	Speed controller	Silencer	Piping (1 m)	Composite effective X-sectional area (mm²)	System No.
4KB110	C6	SC1-6	SLW-6S	ø6xø4	3.2	❶
4KB210	C8	SC1-8	SLW-8S	ø8xø5.7	7.7	❷
4KB310	C10	SC1-10	SLW-10L	ø10xø7.2	14.1	❸
4KB410	C15	SC1-15	SLW-15A	ø12xø8.9	23.6	❹

* The system No. is indicated in the following graph.

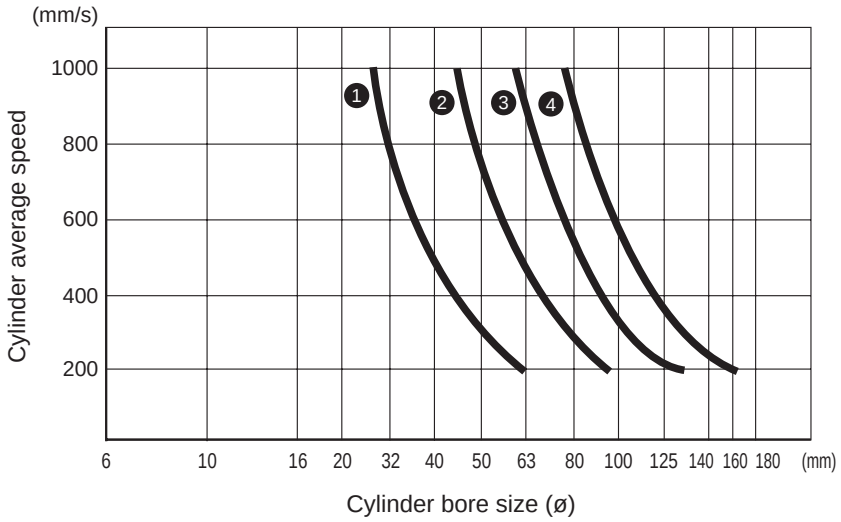

System selection

2 Selecting from the load value and operation time

■ How to select

When load (N) and cylinder required operation time (S) are already decided, use [System selection 2] to select an appropriate model. Follow the following procedures.

STEP 1

[Confirming conditions]
Load value (N),
Required operation time (S)

↓

STEP 2

Selecting cylinder bore size

From Graph 1

↓

STEP 3

Selecting theoretical reference speed

From Graph 2

↓

STEP 4

Selecting a suitable system

From Graph 3

↓

STEP 5

Selecting suitable components

From Table 1

STEP 1 Confirming conditions

(1) Load	F=□(N)
(2) Required operation time	t =□(s)
(3) Stroke	L=□(mm)
(4) Pressure	P=□(MPa)

M: Weight of body (kg)
μ : Friction coefficient (normally μ≈ 0.3)
F : Load (N)
g : 9.8 m/s²

● Vertical

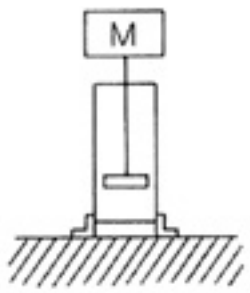

F=Mg

● Horizontal

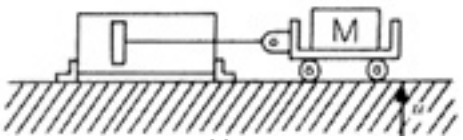

F=μMg

STEP 2 Selecting cylinder bore size

According to the nomogram for cylinder bore size, select the cylinder bore size and read the load factor at the same time. (Normally, for value F of “Step 1 Confirming conditions”, read the cylinder bore size whose load factor is close to 50%)

Cylinder bore size D = ø ☐

(Example) When F = 800N , P = 0.5 MPa , cylinder bore size is ø63 at Load factor 50% .

Graph 1 Nomogram to find cylinder bore size

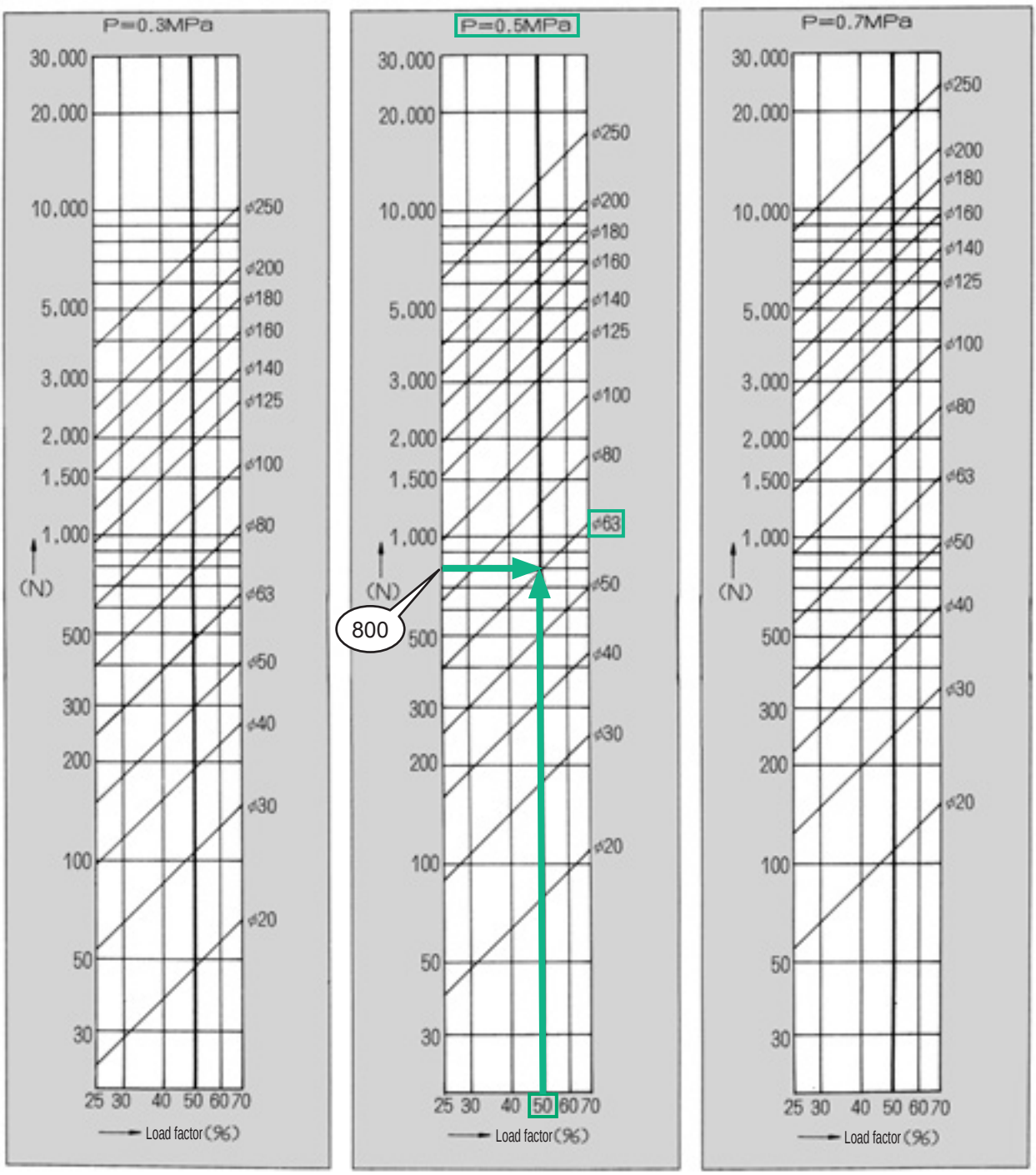

System selection

STEP 3 Selecting theoretical reference speed

According to t-*vo* graph, read *vo* value to obtain the required operation time t (sec).

vo=☐

(Example) When Load factor 50% and Stroke of 200mm cylinder operate with 1.0sec ,
theoretical reference speed is 450 mm/s .

Graph 2 t-*vo* graph

Load factor 0%

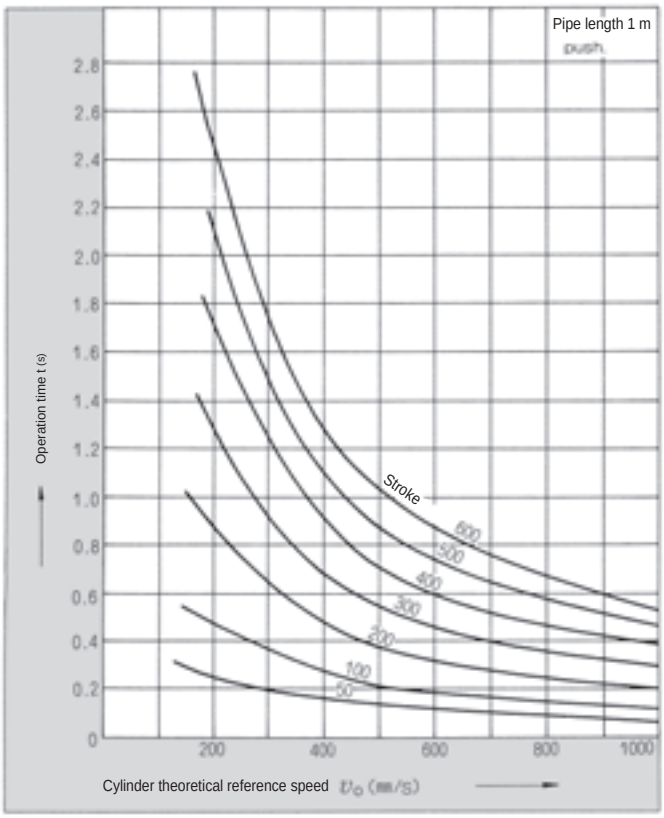

Load factor 25%

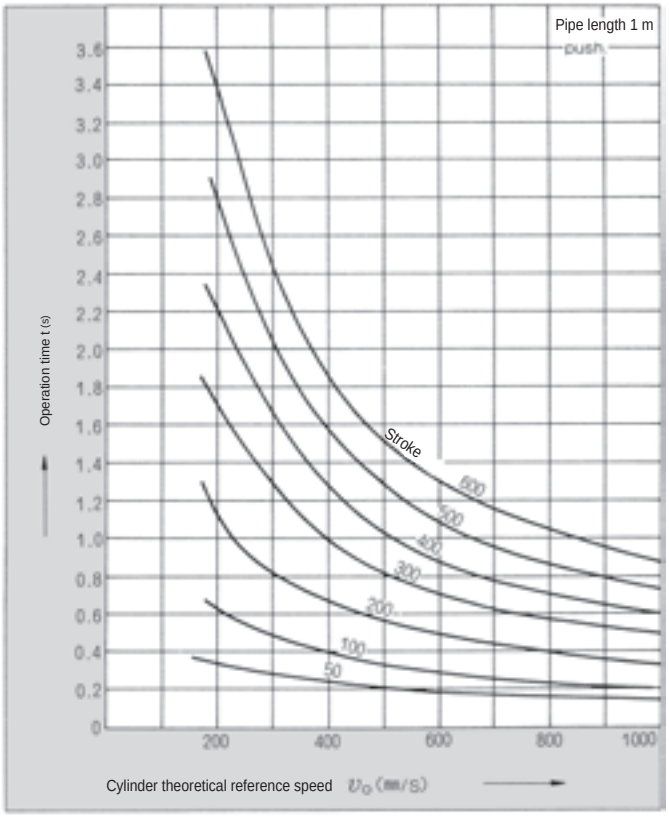

Load factor 50%

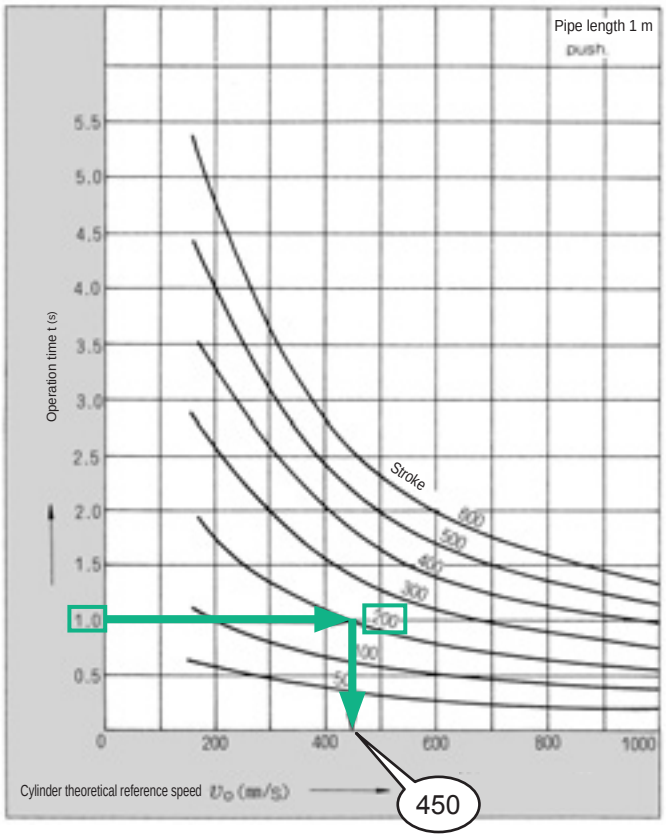

Load factor 70%

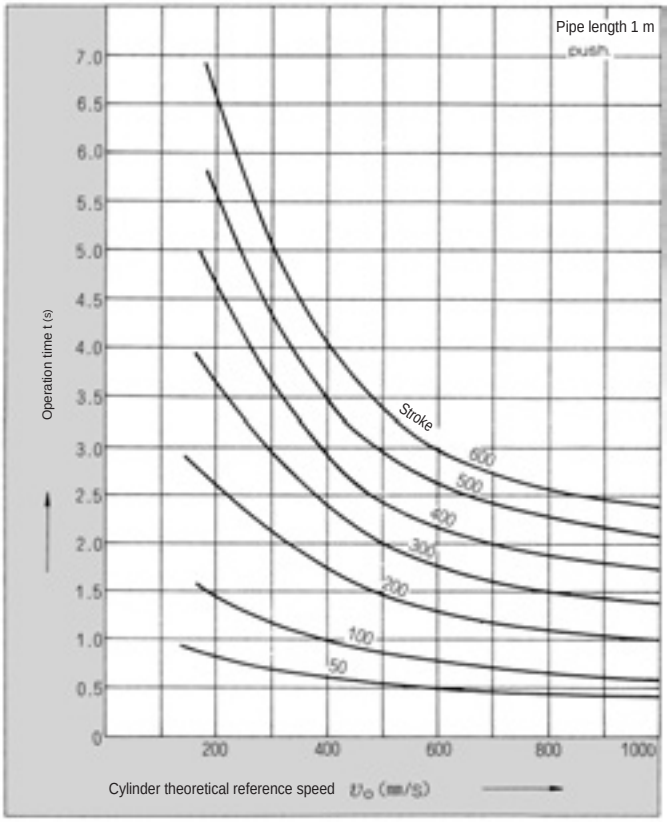

System selection

STEP 4 Selecting a suitable system

In the system selection table, find the cross point of *VO* obtained in [STEP 3 Selecting theoretical reference speed] and øD obtained in [STEP 2 Selecting cylinder bore size], and from the cross point, trace a line extended straight up to read the system code.

System code ☐

(Example) In order to operate ø63 cylinder at theoretical reference speed 450 mm/s, C1 system is ideal.

Graph 3 System selection table

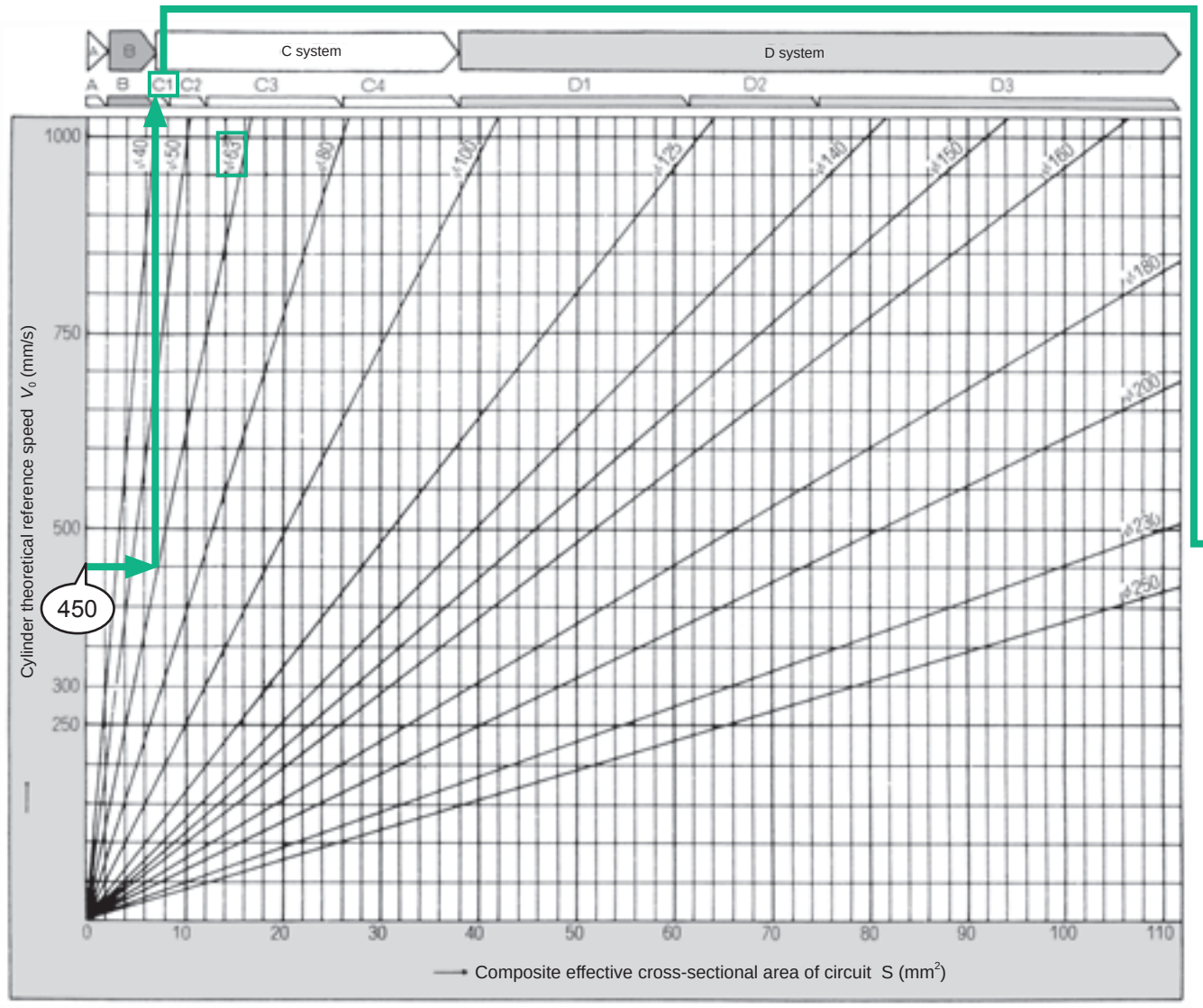

STEP 5 Selecting suitable components

According to the standard system table, confirm the model No. of proper system components with the code found in [STEP 4 Selecting a suitable system].

	(Example) CI system
Valve ☐	Valve: Single 4KB210-08 or 4GB310R-08 Double 4KB220-08 or 4GB320R-08
Speed controller ☐	Speed controller: SCI-8
Silencer ☐	Silencer: SLW-8A
Piping ☐	Piping: ø10 x ø7.2 nylon tube 1 m

Table 1 Standard system table

Standard system No.	Valve		Speed controller	Silencer	Piping	Composite eff X-sect area (mm^2) pipe 1 m
	Single solenoid	Double solenoid				
A	4SB010-M5 4KA110-GS4	4SB020-M5 4KA120-GS4	SC3W-M5-4 (SC-M5)	SLM-M5	ø4xø2.5 Nylon tube	0.9
B1	4KA110-GS6 4KB110-06	4KA120-GS6 4KB120-06	SC3W-6-6 SCL2-06-H66	SLM-M5 SLW-6A	ø6xø4 Nylon tube	2.0
B2	4KB110-06 4GB110R-06	4KB120-06	SC1-6 SCL2-08-H88	SL-M5 SLW-6A	ø8xø5.7 Nylon tube	3.0
B3	4GB210R-06 4KB210-06	4KB220-06	SC1-6 SCL2-08-H88	SLW-6A SLW-6S	ø8xø5.7 Nylon tube	5.2
B4	4GB210R-08 4KB210-08	4GB220R-08 4KB220-08	SC1-8 SCL2-10-H1010	SLW-6A SLW-8A	ø10xø7.2 Nylon tube	6.4
C1	4GB210R-08 4KB210-08 4F210-08	4GB220R-08 4KB220-08 4F220-08	SC1-8 SCL2-10-H1010	SLW-8A SLW-8S	ø10xø7.2 Nylon tube	7.8
C2	4GB310R-10 4F310-10 4KB310-10	4GB320R-10 4F320-10 4KB320-10	SC1-10	SLW-10A	ø10xø7.2 Nylon tube or Rc3/8 steel pipe	12
C3	4GB410-15 4F510-15 4KB410-15	4GB420-15 4F520-15 4KB420-15	SC1-15	SLW-15A	Rc1/2 steel pipe	27
C4	4GB410-15 4F510-15 4KB410-15	4GB420-15 4F520-15 4KB420-15	SC-20A	SLW-15A	Rc1/2 steel pipe	38
D1	4F610-20	4F620-20	SC-20A	SL-20A	Rc3/4 steel pipe	64
D2	4F710-20	4F720-20	SC-20A	SL-20A	Rc3/4 steel pipe	80
D3	4F710-25	4F720-25	SC-25A	SL-25A	Rc1 steel pipe	112

Effective cross-sectional area for steel pipes and nylon tubes, and recommended max. flow rate for gas pipes

Effective cross-sectional area of steel pipe

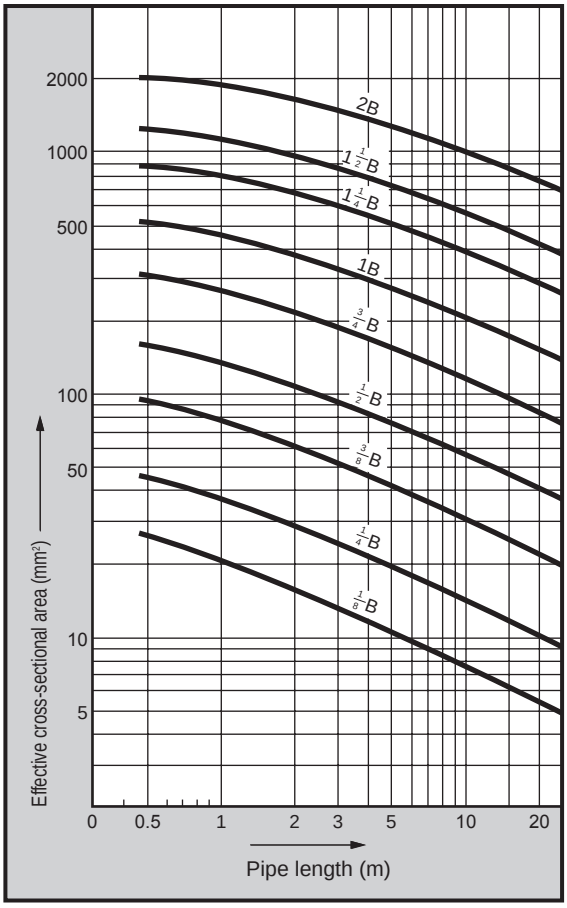

Effective cross-sectional area of nylon tube

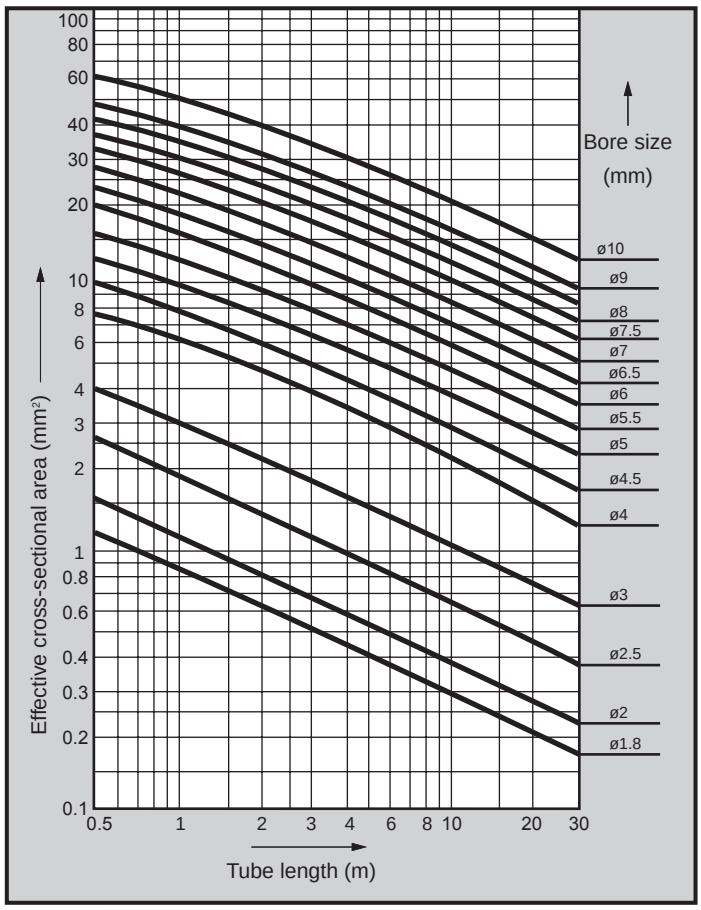

Recommended max. flow rate table of gas tube

Nominal size	1/8B	1/4B	3/8B	1/2B	3/4B	1B	1 1/4B	1 1/2B
Pressure drop MPa (*1)	0.124	0.0707	0.0576	0.0425	0.0276	0.0209	0.0133	0.0105
Inlet pressure MPa	Recommended max. flow rate (L/min)							
0.05	127	244	518	838	1,465	2,460	3,870	5,150
0.1	146	282	598	965	1,690	2,828	4,460	5,950
0.15	163	314	668	1,076	1,885	3,150	4,960	6,630
0.2	179	344	730	1,180	2,060	3,450	5,430	7,280
0.3	206	395	840	1,360	2,375	3,900	6,300	8,400
0.4	230	442	940	1,520	2,660	4,450	7,000	9,360
0.5	252	485	1,030	1,660	2,920	4,875	7,700	10,250
0.6	272	523	1,110	1,800	3,140	5,250	8,300	11,050
0.7	292	558	1,185	1,920	3,350	5,620	8,870	11,800
0.8	308	592	1,260	2,035	3,560	5,970	9,430	12,570
0.9	324	623	1,325	2,140	3,745	6,290	9,900	13,220
1.0	340	654	1,395	2,250	3,930	6,600	10,400	13,880
1.2	370	717	1,510	2,450	4,280	7,150	11,250	15,040
1.4	398	763	1,625	2,624	4,590	7,700	12,100	16,200
1.5	410	790	1,680	2,710	4,740	7,930	12,550	16,780

(*1: Inlet pressure = 0.5 MPa
Gas pipe length: 10 m)

(Remarks)

In the main line where the piping distance tends to increase, it is necessary to consider a pressure drop occurring at the end of the main line when air passes.

The recommended max. flow rate refers to the max. flow rate that can be recommended in the range of allowable pressure drop with respect to piping length, determined from actual use.

This does not mean that a higher flow is not possible, but rather that the pressure will further decrease if the flow exceeds this value.

Flow characteristics display method

1. Flow characteristics display

The catalog specifications indicate the flow rate as follows.

Applicable components	Indicator	Unit	Standards
Pneumatic compo-nents	New JIS compliant indication	C, b	ISO 6358:1989 "Pneumatic fluid Components -Flow characteristics test method"JIS B 8390:2000 (ISO 6358 translation)
	Conventional indication	S	JIS B 8373:1993 "Pneumatic 2-port solenoid valves" JIS B 8374:1993 "Pneumatic 3-port solenoid valves" JIS B 8375:1993"Pneumatic 4, 5-port solenoid valve" JIS B 8379:1995 "Pneumatic noise reduction device"
		Cv	ANSI(NFPA)T3. 21. 3:1990

2. Explanation

The flow characteristics of the solenoid valves were conventionally indicated with the effective cross-sectional area S. However, JIS was revised (JIS B 8390:2000), and these are now indicated with the sonic conductance C and critical pressure ratio b.

- Sonic conductance C: Value obtained by dividing the passage weight flow of the component in the choke flow by the sum of the upstream absolute pressure and standard state density. (sonic conductance) S ≈ 5.0 C (Conventional sizing is possible with C.)
- Critical pressure ratio b: Pressure ratio at which choked flow results if smaller than this value (downstream pressure/upstream pressure) (critical pressure ratio)
- Effective cross-sectional area S (mm^2): The value of the ideal restricted cross-sectional area without friction or compressed flow, calculated from the pressure changes inside the air tank when the choke flow is released from the components mounted on the air tank.

* Choke flow: Flow at which upstream pressure is higher than downstream pressure, and speeds at certain sections of components reach acoustic velocity. The fluid's mass flow rate is proportional to the upstream pressure, and is not dependent on downstream pressure. (Choked flow)

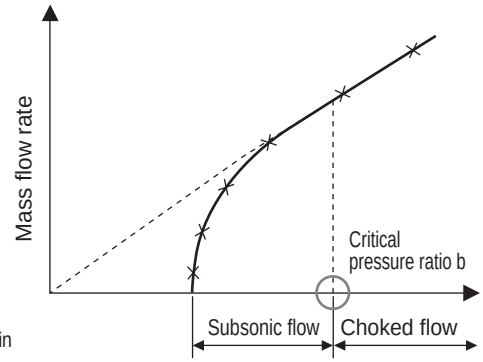

Fig. 1 Mass flow characteristics for upstream pressure

Flow rate formula

Depending on the actual unit, they are shown as follows.

$\frac{P_2+0.1}{P_1+0.1}$ Choked flow when ≤ b

$$Q=600\times C(P_1+0.1)\sqrt{\frac{293}{273+t}} \quad \text{.....(1)}$$

$\frac{P_2+0.1}{P_1+0.1}$ Subsonic flow when >b

$$Q=600\times C(P_1+0.1)\sqrt{1-\left[\frac{\frac{P_2+0.1}{P_1+0.1}-b}{1-b}\right]^2}\sqrt{\frac{293}{273+t}} \quad \text{.....(2)}$$

Q : Air flow rate [dm^3/min(ANR)], SI unit dm^3 (cubic decimeter) can also be expressed with L (liter). $1dm^3$ = 1L
C : Sonic conductance [dm^3/(s·bar)]
b : Critical pressure ratio [-]
P_1 : Upstream pressure [MPa]
P_2 : Downstream pressure [MPa]
t : Temperature (°C)

To calculate effective cross-sectional area S, substitute the value C obtained with C = S/5 above in the above formula.
For subsonic flow, substitute b = 0.5 in formula (2).

Degree of protection

● Degree of protection

■ IEC (International Electrotechnical Commission) standards (IEC60529)

■ JIS C 0920 : 2003

IP-□ □

Degree of protection (International Protection)

1st characteristic No. (degree of protection for foreign solid matter)

1st character No.	Degree of protection	
0	No protection	Without protection
1	ø50 mm	Protection against inflow of solids 50 mm and over in diameter
2	ø12.5 mm	Protection against inflow of solids 12.5 mm and over in diameter
3	2.5 mm	Protection against inflow of solids 2.5 mm and over in diameter
4	1 mm	Protection against inflow of solids 1.0 mm and over in diameter
5	Dust-proof	No inflow of dust at levels adversely affecting normal device operation or safety
6	Dust proof	No inflow of dust

2nd characteristic No. (degree of protection for water entry)

2nd character No.	Degree of protection	
0	No protection	
1	Protection against water dripping	No harmful effects from water dripping vertically.
2	Protection against dripping water tilted at an angle of up to 15°	Water dripping vertically has no adverse effect when the product is tilted at an angle of up to 15° from its normal position.
3	Protection for watering	Water falling as a spray at any angle up to 60° from the vertical has no adverse effect.
4	Protection against splashing water	Water splashing against the product from any direction has no adverse effect.
5	Protection against water jets	No harmful effects occur even when water is sprayed with nozzles from all directions.
6	Protection against powerful jets	Water projected in powerful jets against the product from any direction has no adverse effect.
7	Protection against immersion	Water will not enter the product even when it is immersed in water under defined conditions.
8	Protection against immersion	The product can be used for continuous immersion in water.

MEMO

Safety Precautions

Be sure to read this section before use.

When designing and manufacturing equipment using CKD products, the manufacturer is obligated to ensure that the safety of the mechanism, pneumatic control circuit and/or water control circuit and the system that runs the electrical controls are secured.
It is important to select, use, handle and maintain CKD products appropriately to ensure their safe usage.
Observe warnings and precautions to ensure device safety.
Check that device safety is ensured, and manufacture a safe device.

WARNING

1 This product is designed and manufactured as a general industrial machine part.
It must be handled by an operator having sufficient knowledge and experience.

2 Use this product in accordance with specifications.

This product must be used within its stated specifications. In addition, never modify or additionally machine this product.
This product is intended for use in general industrial machinery equipment or parts. It is not intended for use outdoors (except for products with outdoor specifications) or for use under the following conditions or environments.
(Note that this product can be used when CKD is consulted prior to its usage and the customer consents to CKD product specifications. The customer should provide safety measures to avoid danger in the event of problems.)

❶ Use for applications requiring safety, including nuclear energy, railways, aircraft, marine vessels, vehicles, medical devices, devices or applications in contact with beverages or foodstuffs, amusement devices, emergency cutoff circuits, press machines, brake circuits, or safety devices or applications.
❷ Use for applications where life or assets could be significantly affected, and special safety measures are required.

3 Observe organization standards and regulations, etc., related to the safety of the device design and control, etc.

ISO4414,JIS B 8370(Pneumatic fluid power - General rules and safety requirements for systems and their components)
JFPS2008(Principles for pneumatic cylinder selection and use)
Including the High Pressure Gas Safety Act, Industrial Safety and Health Act, other safety rules, organization standards and regulations, etc.

4 Do not handle, pipe, or remove devices before confirming safety.

❶ Inspect and service the machine and devices after confirming safety of the entire system related to this product.
❷ Note that there may be hot or charged sections even after operation is stopped.
❸ When inspecting or servicing the device, turn OFF the energy source (air supply or water supply), and turn OFF power to the facility. Discharge any compressed air from the system, and pay enough attention to possible water leakage and leakage of electricity.
❹ When starting or restarting a machine or device that incorporates pneumatic components, make sure to secure system safety, such as pop-out prevention measures.

5 Observe the warnings and cautions on the following pages to prevent accidents.

■ Precautions are ranked as “DANGER”, “WARNING”, and “CAUTION” in this section.

DANGER:	In the case where the product operation is mishandled and/or when the urgency of a dangerous situation is high, it may lead to fatalities or serious injuries.
WARNING:	A dangerous situation may occur if handling is mistaken, leading to fatal or serious injuries.
CAUTION:	A dangerous situation may occur if handling is mistaken, leading to minor injuries or property damage.

Note that some items indicated with “CAUTION” may lead to serious results depending on the conditions.
All items contain important information and must be observed.

Warranty

1 Warranty period

The product specified herein is warranted for one (1) year from the date of delivery to the location specified by the customer.

2 Warranty coverage

If the product specified herein fails for reasons attributable to CKD within the warranty period specified above, CKD will promptly provide a replacement for the faulty product or a part thereof or repair the faulty product at one of CKD's facilities free of charge.
However, following failures are excluded from this warranty:

1) Failure caused by handling or use of the product under conditions and in environments not conforming to those stated in the catalog, the Specifications, or the Instruction Manual.
2) Failure caused by use of the product exceeding its durability (cycles, distance, time, etc.) or caused by consumable parts.
3) Failure not caused by the product.
4) Failure caused by use not intended for the product.
5) Failure caused by modifications/alterations or repairs not carried out by CKD.
6) Failure caused by reasons unforeseen at the level of technology available at the time of delivery.
7) Failure caused by acts of nature and disasters beyond control of CKD.

The warranty stated herein covers only the delivered product itself. Any loss or damage induced by failure of the delivered product is excluded from this warranty.
Note: For details on the durability and consumable parts, contact your nearest CKD sales office.

3 Compatibility check

The customer is responsible for confirming the compatibility of CKD products with the customer's systems, machines and equipment.

Precautions for export

1 Security Trade Control

The products in this catalog and their related technologies may require approval before export or provision.
For the sake of maintaining world peace and safety, there may be cases in which approval under the Foreign Exchange and Foreign Trade Control Law is required in advance, depending on the country to where the product or related technology is being exported or provided.
The scope of products and related technologies requiring approval are listed in the Export Trade Control Order Appendix Table 1 or Foreign Exchange Order Appendix Table.
The Export Trade Control Order Appendix Table 1 and Foreign Exchange Order Appendix Table contain the following two types of information.

· "List controls" specified for items 1 to 15
· "Catch-all controls" that do not indicate specifications by item, but restriction by application (Section 16)

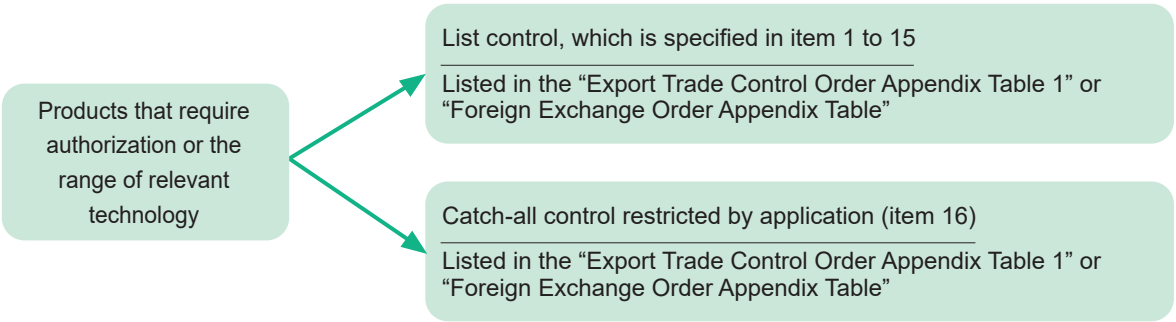

An application for approval is received by the Security Export Licensing Division of the Ministry of Economy, Trade and Industry or local bureaus of the Ministry of Economy, Trade and Industry.

2 Products and related technologies in this catalog

The products and related technologies in this catalog are subject to the catch-all control of the Foreign Exchange and Foreign Trade Control Law.
When exporting or providing the products or related technologies in this catalog, ensure that they are not used for arms or weapons.

3 Contact

Contact your local CKD Sales Office for information on the Security Trade Control of products and related technologies in this catalog.

* Refer to Intro Page 80 for cylinder switch.

Design/selection

1. Checking the specifications

⚠ WARNING

■ Use the product in the range of conditions specified for the product.
The product in this catalog is designed for use only in a compressed air system. Use with pressure or temperature exceeding the specifications range may result in damage or operation faults. (Refer to specifications) Contact CKD when using fluids other than compressed air and low hydraulic pressure.

■ If dimensional accuracy is required, contact CKD for specific details.
The dimensional tolerance of the pneumatic cylinder is adjusted based on JIS B 8368.
If higher accuracy is required, contact CKD in advance.

2. Safety design

⚠ WARNING

■ With the cylinder, there is the risk of the piston rod popping out in cases when a change of force occurs due to disruption of the sliding portions of the machine.
This could cause physical harm, such as pinched hands or feet, or mechanical damage. Adjust the machines so that they operate smoothly and design so that physical harm will be avoided.

■ If there is a risk of bodily injury, install a protective cover.
If the cylinder's drive section could cause bodily injury, install a protective cover. Design a structure that prevents person(s) from entering the cylinder's operating range or coming into contact with those sections directly.

■ Consider the possibility that the circuit pressure may be decreased by electrical power failure.
When using a cylinder in clamp mechanisms, blackouts, etc., may cause the circuit pressure to drop, reducing the clamping force and risking falling workpieces. Incorporate a safety device that prevents physical harm or mechanical damage. Suspension mechanisms and lifting devices should also be considered for position locking.

■ Consider the possibility of power source failure.
For devices controlled with power sources such as pneumatics, hydraulics, or electricity, take measures to prevent bodily injury or machine damage if power fails.

■ Design the operating circuit at emergency stop.
If one side of the piston is pressurized after the air in the cylinder is released, such as when the cylinder is driven by an exhaust center type directional control valve, or during startup after the residual pressure in the circuit is discharged, the driven object will pop out at high speed. This could cause physical harm, such as pinched hands or feet, or mechanical damage. Design with a circuit to prevent popping out.

■ Consider the operation status at emergency stop.
If the safety device is activated and the machine stops during a system failure such as emergency stop or power outage, design the system so that physical harm or damage to the workpiece/device/equipment does not occur due to cylinder operation.

■ Consider the operation status when restarting after emergency stop or abnormal stop.
Design the system so that bodily injury or equipment damage will not occur when restarting.
If there is a need to reset the cylinder to the starting position, design a safe control device.

■ Take measures to prevent physical harm or property damage in the event of failure of this product.

⚠ CAUTION

■ Do not use in a range where the piston could collide with the stroke end and break.
If a piston collides against the cover at the stroke end and stops due to inertia, use within the range of allowable absorbed energy.

■ Mount a speed controller on the cylinder.
Use each cylinder within the applicable working piston speed range.

■ Install a "pressure switch" and "residual pressure exhaust valve" on the device's compressed air supply side.
● The pressure switch will disable operation until the set pressure is reached. The residual pressure exhaust valve releases compressed air into the pneumatic pressure circuit to prevent accidents caused by operation of pneumatic components under residual pressure.

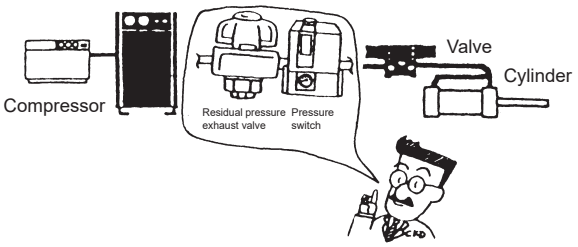

■ Position locking cylinder load factor must be 50% or less.

3. Design by application

⚠ WARNING

■ If requiring deceleration circuit and shock absorber.
If the driven object moves at high speeds or is very heavy, it may be difficult to absorb impact with the cylinder cushion alone. Take measures to ease impact by installing a deceleration circuit before the cushion or by using an external shock absorber. The machine's rigidity must also be considered.

■ If inertia, vibrations, etc., are generated
When mounting the cylinder on a moving object (X-axis module, pallet, etc.), design while keeping in mind the inertia and vibration that are generated when the moving object is stopped.

■ Intermediate stop
When braking the cylinder's piston with a 3-position closed center directional control valve, air compressibility may make it difficult to stop as accurately as when using low hydraulics. In addition, since valves and cylinders do not guarantee zero air leakage, holding the stop position for long periods may not be possible. Consult with CKD when requiring a stop position to be held for long periods.

4. Working environment

⚠ WARNING

■ Install the product where it will not be exposed to rain, water, direct sunlight, or high temperatures.

■ Do not use this product in a corrosive environment.
Use in such an environment could lead to damage or operation failure.
Though piston rods, tie rods, etc. used in the cylinder are plated materials, machining parts (thread surface width, cut surface) are not plated. Implement measures as necessary since rust occurs even in normal environments.

■ Attach a cover in dusty places or places exposed to water, oil, Coolant, or coolant.
Use a rubber scraper if extremely dusty. Use a coolant proof if liquid could splatter onto the product.

■ If ambient temperature is 5°C or below, moisture in the circuit could freeze and lead to misoperation, etc.

⚠ CAUTION

■ When using the cylinder with valve with AC voltage, a thrumming noise may be heard depending on the working conditions. If the noise is a problem because of the working environment, select DC voltage.

■ Some models use oil-impregnated bearings, and oil may be discharged outside of the cylinder. Do not use in places susceptible to oil.

5. Durability

⚠ WARNING

■ Durability differs based on working conditions and model characteristics.

6. Pneumatic source

⚠ WARNING

■ Use clean dry compressed air.
Do not use the compressed air if it contains chemicals, synthetic oils containing organic solvents, salt, or corrosive gas, as it can cause damage and/or operation failure.

⚠ CAUTION

■ Use dry compressed air that does not cause moisture inside the piping.

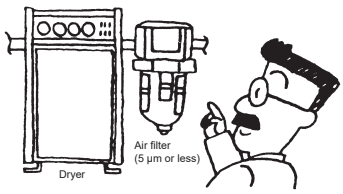

- Moisture will occur if the temperature drops in the pneumatic piping or pneumatic components.
- If the piping volume is larger than the cylinder volume (atmospheric pressure-converted volume), the compressed air in the cylinder will not be completely exhausted when changing with the solenoid valve. This compressed air will condense, form water drops, and cause drainage.
- Operation faults could occur if moisture enters the air flow path of pneumatic components and temporarily blocks passage.
- Moisture could cause rust, making the pneumatic components fail.
- The drain will flush the lubricant oil and cause a lubrication defect.

■ Ultra dry air is not suitable for standard pneumatic components. Use ultra dry air compatible devices.
- Ultra dry compressed air will shorten the life of pneumatic components.
- Use a solenoid valve for DC voltage drive.

■ Use compressed air that does not contain oil oxides, tar, carbon, etc., from the air compressor.
- If oil oxides, tar, or carbon enter the pneumatic components and solidify, resistance at the sliding section will increase, leading to operation failure.
- If the supplied lubricant mixes with oil oxides, tar, carbon, etc., the sliding section of the pneumatic component could be worn down.

■ Use compressed air that does not contain solid foreign matter.
- Solid foreign matter in compressed air could enter the pneumatic components and cause wear at the sliding section or hydraulic locking. Install a 5 μm or less air filter.
- Regularly perform compressor maintenance and inspection.

7. How to use

⚠ CAUTION

■ Since it is pre-lubricated, it can be used without lubrication. Lubricate with Class 1 turbine oil (non-additive) ISO VG32 for lubrication. If stopped in the middle, it leads to malfunction as the initial lubricant is used up, so be sure to continue lubrication for operation.
Decide on lubrication or no-lubrication specifications for the pneumatic components and ensure that implementation of the corresponding method is reliably managed.

■ Provide intermediate support for a cylinder with long stroke.
If the cylinder has a long stroke, provide an intermediate support to prevent rod damage due to rod drooping, tube sag, vibration, or external loads.

■ Use within the max. stroke for the mounting format.
Refer to Ending Page 70.

■ Speed changes occur at startup in the cylinder with air cushion.

When the cushion ring slips off the cushion packing at startup, speed changes occur in the cylinder with air cushion.
As the changes may increase depending on conditions such as the speed controller's layout and adjustment, piping diameter, air pressure, and cushion needle opening, consult CKD if prevention is required.

■ Make every effort to avoid using multiple synchronized cylinders.

If not synchronized, the piston rod could twist and lead to malfunctions. If synchronized operation is required, be sure to provide a rigid guide device separately.

■ For mounting of clevis and trunnion, check for free rotation without interference during full stroke operation of the cylinder before use.

■ Use an oscillating cylinder (clevis or trunnion) that can rotate at the cylinder angle, if the load movement direction changes with the operation. Install the bracket at the end of the rod so that it moves in the same direction as the cylinder body.

■ Do not couple the fixed cylinder with a rotating arm for use. In this case, connect an oscillating cylinder to the arm.

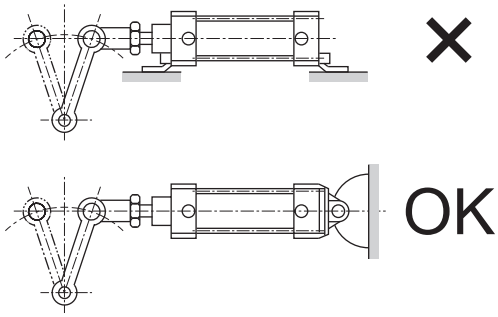

■ To avoid damage to the piston rod end thread or wear and seizing of the bush, etc., connect the end of the piston rod and load with a floating fitting or simplified floating fitting so twisting does not occur at any position in the stroke.

■ If the gap between clevis or trunnion and the corresponding bearing is large, the pins and shaft will bend. Therefore, keep this gap relatively small. (Recommended fit: H10/e8)

■ In the figure below, if the height H from the mounting surface of the bearing bracket to the bearing position is high, a large force is generated on the bracket mounting parts by the cylinder force, causing damage to bolts, etc.

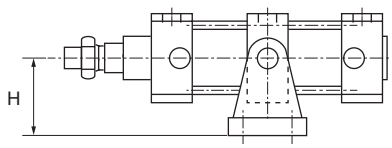

■ The cylinder may have small amounts of oil oozing out from the sliding section/packing/gasket. Do not use in places susceptible to oil.

■ Precautions for use of pressure relief port
The exhaust port (P72) cannot be used for vacuum treatment. The reverse cannot be performed as well. Be sure not to do this because this could cause dispersion of particles or malfunctions.

8. Securing of space

⚠ CAUTION

■ Secure sufficient space around the cylinder for installation, removal, wiring, and piping work.

9. Statement in the instruction manual

⚠ CAUTION

■ Indicate the maintenance conditions in the device's instruction manual.

● The product's performance may drop too low to maintain an appropriate safety level depending on usage conditions, working environment and maintenance status. With correct maintenance, the product functions can be used to the fullest.

Mounting, installation and adjustment

1. Installation

⚠ WARNING

■ Protect the load from falling or toppling when the cylinder is installed or removed.

⚠ CAUTION

■ Remove the cylinder packaging and dust-proof seal of the piping port just before starting piping.
- Removing the dust-proof seal of the piping port before the piping work starts could allow foreign matter to enter the cylinder from the piping port and cause failure or misoperation.

■ Use suspension fittings if the cylinder weighs 15 kg or more.

■ Do not hit the cylinder tube and piston rod sliding section with anything or sandwich objects between them, causing scratches or dents.
The bore size is manufactured with precise tolerance, and operation faults could occur with even the slightest deformation. Scratches or dents on the sliding portion of the piston rod will cause damage of the packing, etc., and may lead to air leakage.

■ If the direction that the load moves in is not parallel to the piston rod shaft center, the piston rod and body (tube) could twist and cause the piston rod to pop out. Twisting can cause seizing, damage, etc. Always align the piston rod shaft center and load movement direction.

■ Prevent seizing at rotating sections.
Apply grease to rotating sections (pins, etc.) to prevent seizing.

2. Pneumatic source

⚠ CAUTION

■ Install a pneumatic filter just before the pneumatic component in the circuit.
- To remove moisture in the pipes, attach an air dryer and filter. Install a filter near the directional control valve (primary side) to remove rust, foreign matter and drainage.

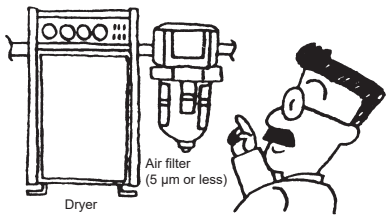

■ When supplying compressed air after connecting pipes, do not suddenly apply high pressure.
- The pipe connection could dislocate, causing the pipe tube to fly out, leading to accidents.
- If compressed air is supplied too slowly, sealing pressure may not be generated by the sealing mechanism in the solenoid valve. This can lead to air leaks.
- The cylinder may operate suddenly.

3. Piping

⚠ CAUTION

■ When piping, refer to the instruction manual and make sure not to use the wrong connection port.
- This could cause improper operation.

■ When connecting pipes, wrap sealing tape clockwise from the inside position to within 2 threads from the pipe end.
- If sealing tape protrudes from the pipe threads, it could be cut when screwing the bolts in. This could cause the tape to enter the valve, causing failures.

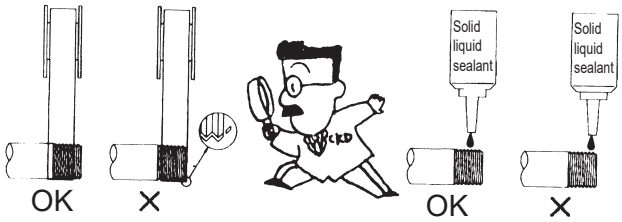

■ Check that the piping connected to the cylinder is not dislocated due to vibration, looseness, or tension.
- Cylinder speed cannot be controlled if pneumatic circuit exhaust piping is dislocated.
- When using the chuck holding mechanism, the chuck may be released, creating a hazardous state.

■ Observe the following precautions when using nylon tubes or urethane tubes for piping material.
- Use flame-resistant tubes or metal pipes in an environment where spattering may occur.

■ Use corrosion-proof materials such as galvanized pipes, stainless steel pipes, nylon pipes or rubber pipes for piping material.

■ Use appropriate torque to tighten the pipes when connecting them.

- The purpose is to prevent air leakage and damage to bolts.
- First tighten the bolts by hand to ensure that the threads are not damaged, then use a tool.

[Reference value] Refer to instruction manual.

Port thread	Tightening torque (N·m)
M3	0.3 to 0.6
M5	1 to 1.5
Rc 1/8	3 to 5
Rc 1/4	6 to 8
Rc 3/8	13 to 15
Rc 1/2	16 to 18
Rc 3/4	19 to 40
Rc 1	41 to 70

■ Always flush just before piping pneumatic components.

- Any foreign matter that has entered during piping must be removed so it does not enter the pneumatic components.

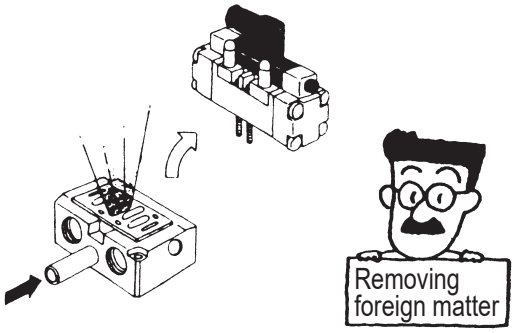

4. Pre-operation confirmation

⚠ WARNING

■ Check load and cylinder installation connection for looseness and other abnormalities before starting operation.

■ Do not use the device until proper operation is confirmed.
After installation, repair, or modification, connect compressed air or electric power and conduct appropriate functional and leakage inspection to confirm that installation is correct.

■ Confirm that there is no machine interference and that the actuation system is normal.

■ Confirm that there is no abnormality in device operation, and gradually raise and set pressure.

■ If operation is started while the exhaust side is at atmospheric pressure, the rod could pop out and cause a dangerous situation. Apply pressure to the cylinder chamber on the exhaust side before starting.

⚠ CAUTION

■ Before supplying compressed air after connecting pipes, check that there are no air leaks at any pipe connections.

- Apply a leakage detection agent to pipe connections with a brush and check that there are no air leaks.

■ Be sure to read the instruction manual carefully.
Read carefully and fully understand contents before starting use. Store so as to allow confirmation at any time.

5. Adjustment

⚠ WARNING

■ When adjusting speed with the speed controller, gradually open the needle from the closed state and adjust.
If speed is adjusted in the opened state, the rod could pop out, creating a hazard.

■ The effect of the cushion with air cushion is adjusted at shipment. However, re-adjust the cushion needle for use in accordance with the size of the load and piston speed.
Gradually open the needle from the closed state and adjust the effect of the cushion. If the cushion needle is loosened too much, the cushion cannot function and may fall off.
After making adjustments, tighten the needle nut (hex nut) to fix the unit in place.
Use kinetic energy within the allowable value.
The product may be damaged if allowable values are exceeded.

■ When the cylinder is in operation, do not enter or put your hand into its operating range.

Use/maintenance

1. Maintenance and inspection

⚠ WARNING

■ Refer to the instruction manual and conduct careful maintenance and inspection.
Incorrect handling could result in device or system damage or operation faults.

⚠ CAUTION

■ Conduct daily inspections and regular inspections to ensure that maintenance control is done correctly.
● If maintenance is not correctly managed, the product's functions could deteriorate markedly and lead to a shortened service life, faults and accidents.

(1) Supplied compressed air pressure control
● Is the set pressure supplied?
Does the pressure gauge indicate the set pressure while the equipment is operating?

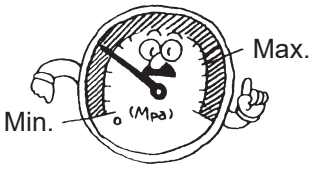

(2) Pneumatic filter control
● Is the drain correctly discharged?
Is the bowl or element clean enough to use?

(3) Control of compressed air leaks from piping connections
● Is the state of the connection, especially at movable sections, normal?

(4) Solenoid valve operational status control
● Are operations delayed? Is exhaust normal?

(5) Control of pneumatic actuator operation
● Is operation smooth?
Is the end stop state normal?
Is coupling with the load normal?

(6) Lubricator control
● Is the oil volume adjustment normal?

(7) Lubricant control
● Is the lubricant that is being supplied an official item?

■ Do not use if air leakage rate increases or the device does not operate correctly.
● After repair or modification, connect compressed air and electricity, and conduct functional and leakage inspection to confirm that operation is normal.

■ When restarting after not using for a long period of time, check that operation is normal.

■ Replace repair parts beyond the rated service life with new parts during periodic inspection.
Do not use repair parts after 5 years or more of storage.

■ Store repair parts in a cool, dark place not exposed to direct sunlight.

■ If the lubrication of the sliding surface is worsened or dry, periodically grease up the lithium grease (standard) or fluorine grease (heat resistance, low-speed, low friction, P7, etc.). Before applying grease, remove any foreign matter on the sliding surface. Contact CKD if the working grease is unknown.

2. Influence of fluorine grease

⚠ WARNING

■ Smoking with hands smeared with the fluorine grease of cylinders using fluorine grease (such as heat resistance, low-speed, low friction, P7) could generate harmful gases and cause physical harm.

3. Removal

⚠ WARNING

■ Component removal and supply/exhaust of compressed air
Before removing the device, take measures to prevent the driven object from falling or running out of control, and shut OFF air and power. Exhaust all compressed air in the system beforehand. Before restarting, confirm that measures are taken to prevent popping out.

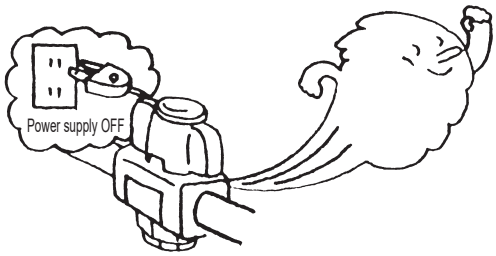

■ When removing double rod cylinder load, lock the load side piston rod using the WAF (Width Across Flats) on the end.If the load side piston rod is not locked, note that the fastening part (screw-in part) of the piston rod may loosen.

■ Take measures so that the load does not fall or drop when the cylinder is removed.

4. Disassembly/assembly

⚠ WARNING

■ Remove cylinders from the equipment before disassembly.

■ Products must be disassembled and assembled by qualified personnel.
After disassembling or reassembling, carry out leakage inspections and operation inspections before reassembling to the device.

■ Note that when disassembling a single acting cylinder, the spring could cause parts to pop out.

■ Use appropriate pliers (C-snap ring mounting tool) to install and remove rod metal.

■ Even in cases when appropriate pliers (C-snap ring mounting tool) are used, be careful as the snap ring may pop out at the tip of the pliers (C-snap ring mounting tool) and cause physical or equipment damage.
In addition, when mounting the unit, be sure that the unit fits securely into the snap ring groove before supplying air.

⚠ CAUTION

■ When performing maintenance such as repair part replacement, etc., disassemble or reassemble in a test bench with clean atmosphere free of dust, and carry out functional inspections to check whether the device is operating normally.

Design/selection

WARNING

■ Application, load current, voltage, temperature, impact, environment, etc., exceeding the specifications will result in damage or operation faults. Use the device as instructed in specifications.

■ Never use this product in an explosive gas atmosphere. The cylinder switch does not have an explosive-proof structure. Never use in an explosive gas atmosphere as explosions or fires could result.

CAUTION

■ Take care when using this product for an interlock circuit.

When using the cylinder switch for an interlock signal requiring high reliability, provide a double interlock by installing a mechanical protection function or a switch (sensor) other than a cylinder switch as a guard if problems occur.
Regularly inspect and confirm that the interlock activates correctly.

■ Pay attention to the contact capacity.

Do not use a load that exceeds the switch's specified voltage and current. This may lead to failure.

■ Pay attention to the contact protection circuit. (Reed switch)

● When an inductive load (relay or solenoid valve) is connected, a surge voltage is generated when the switch is turned OFF. Provide a contact protection circuit.

● Diode used

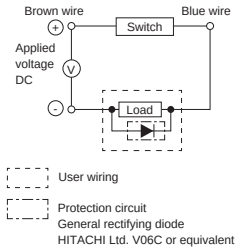

● Capacitor and resistance used

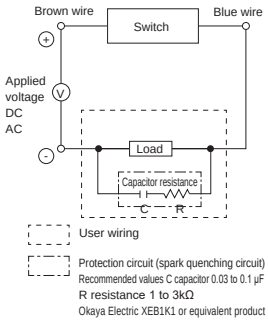

● When a capacitive load is connected, starting current is generated when the switch is turned ON. Provide a contact protection circuit.

● If the wiring increases, the wiring capacity will be reached and a rush current will occur, damaging the switch or shortening the service life. Provide a contact protection circuit if the wiring length exceeds Table 1.
If using at 200 VAC with T8, contact CKD since the usable wiring length may be shortened.

Switch	Voltage	Wiring length
M, T, K, H, V, F, ETO types	DC	50 m
M, T, K, H, V, ETO types	AC	10 m
RO, 5, 6, EO types	DC	100 m
RO, 5, EO types	AC	10 m
R4 type	AC	50 m

Table 1

● Choke coil used

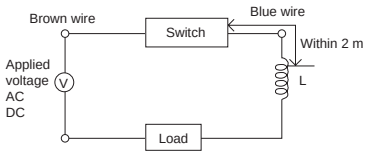

● Choke coil
L = Several hundred μH to several mH
Item with outstanding high frequency characteristics

● Resistance used

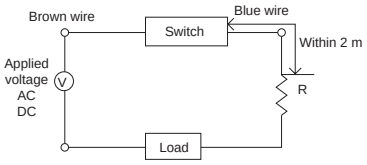

● Rush current limiting resistor
R = Largest resistor tolerated by load circuit side

For specifications of contact protection circuits, refer to Ending Page 27.

■ Avoid using in an environment constantly exposed to water.

● Insulation failure can cause malfunctions.

■ Avoid using this product in environments containing oil or chemicals.

● The cylinder switch may be adversely affected (insulation failure, malfunction caused by swelling of the filled resin, hardening of lead wire sheath, etc.) if used in an environment containing oil, coolant, cleaning fluid, or chemicals. Consult with CKD.

● A coolant proof cylinder switch is available. Refer to “Guide to pneumatic devices compatible with coolants” (No. CC-N-375A) for details.

■ Do not use in a high-impact environment.

For reed switch, if a strong impact (294 m/s^2 or more) is applied while in use, the contact may malfunction by momentarily (1 ms or less) being connected or disconnected. It may be necessary to use a proximity switch depending on the working environment. Consult with CKD.

■ Do not use this product in surge generating areas.

If there are devices and components (solenoid type lifters, high frequency induction furnace, motors, etc.) around the cylinder with proximity switch that generate a large surge, consider surge protection of the source as it may lead to deterioration or damage of the switch internal circuit element.

■ Be careful of accumulation of iron powder and contact with magnetic substances.

If a large amount of iron chips such as cutting chips or welding spatter accumulate or if magnetic objects (material attracted to magnets) contact the cylinder with a cylinder switch, the cylinder will be demagnetized and cylinder switch operations may be inhibited.

⚠ CAUTION

■ Pay attention to the proximity of cylinders, etc.

- When installing more than one cylinder with switches in parallel, keep sufficient distance between the cylinder tubes according to the cylinder specifications.
  Mutual magnetic interference may cause the switch to malfunction.

■ Pay attention to magnetic environments.

- If surroundings contain a strong magnetic field or large current (large magnet, spot welding machine, etc.), use a strong magnetic field proof switch. (HO, HOY, T2YD)
  If a magnetic object is very close to the cylinder, mutual interference may occur and adversely affect detection accuracy.

■ In the mid-stroke position, pay attention to the ON time of the cylinder switch.

- When setting the cylinder switch at mid-stroke and driving a load with the piston movement, if the speed is too fast, the cylinder switch will function but operation time will be too short and the load may not respond correctly.
  The max. detectable piston speed is:

$$V(\text{mm/s}) = \frac{\text{Cylinder switch operating range (mm)}}{\text{Load operation time (s)}}$$

If the piston speed is too fast, use an off-delay output cylinder switch T2JH/V (models limited).

■ Pay attention to the serial connection usage method.

- When serially connecting several 2-wire switches, the switch voltage drop is the total voltage drop of all connected switches. The voltage applied to the load is the voltage obtained by subtracting the voltage drop at switches from the power supply voltage. Check load specifications and determine the number of switches.
- Connecting several 2-wire proximity switches in series may result in a malfunction. Contact CKD in advance. It is recommended to use reed switches.
- When connecting several 3-wire serial proximity switches, the switch voltage drop is the total voltage drop of all connected switches, as with the 2-wire switch. In addition, the current flowing to the switch is the sum of current consumption and load current of the switches connected as in the upper right figure. Check load specifications and determine the number of connections so as not to exceed the maximum load current of the switch.
- The indicator lamp turns ON only when all switches are ON.

Fig. 1: For R3 (Y)/M3 (W)/T3 (Y)/K3 (Y)/F3 (Y)

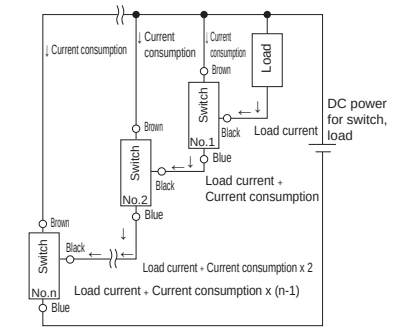

For T3P/K3P/M3P

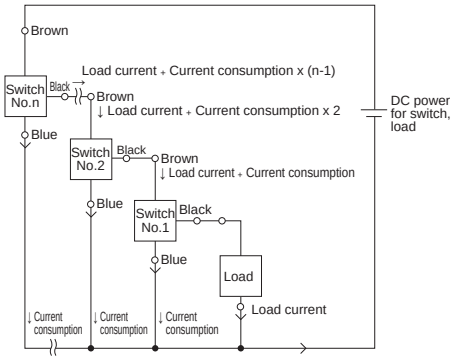

■ Pay attention to the parallel connection usage method.

- When connecting several 2-wire switches in parallel, note that leakage current increases in proportion to the number of connected units. Check load specifications and determine the number of connections.
- With the 2-wire proximity switch, when 1 switch changes from ON to OFF status, voltage at both ends of the switch connected in parallel drops to the internal voltage drop value when the switch is ON and goes below the load voltage range, so other switches will not turn ON. Therefore, check the input specifications of the programmable controller that is the connected load before use.
- Since the leakage current value of the 3-wire proximity switch is very small (10 μA or less), it should not be a problem for normal use.
- Note that switch's indicator lamp could dim or may not turn ON.

■ Output circuit protection (proximity switch)

● When an inductive load (relay or solenoid valve) is connected, surge voltage is generated when the switch is turned OFF. Provide the following protection circuit.

R1

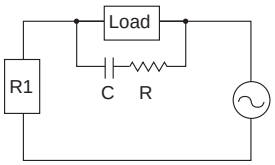

● Capacitor
C=0.03 to 0.1μF
● Resistance
R = 1 to 3 kΩ
Okaya Electric
XEB1K1 or equivalent product

R3(Y), M3(W), T3(Y), K3(Y), F3(Y)

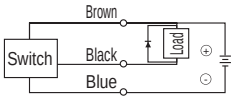

● Diode
D = HITACHI Ltd.
V06C or equivalent product

An example of using a surge absorbing element with inductive load.

● When a capacitive load is connected, starting current is generated when the switch is turned ON. Provide the following protection circuit.

R3(Y), M3(W), T3(Y), K3(Y), F3(Y)

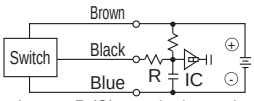

Resistance R (Ω) must be larger than the following equation in this case.

$\frac{V}{0.15}$ = R (Ω) (R3 (Y), M3 (W))

$\frac{V}{0.05}$ = R (Ω) (T3 (Y), K3 (Y), F3 (Y))

● Provide the following protective circuit if the lead wire length exceeds 10 m.

R1, R2(Y), M2(W), T2(Y/J), K2(Y), F2

● Choke coil used

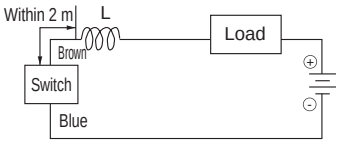

● Choke coil
L = Several hundred μH to several mH
Item with outstanding high frequency characteristics

● Resistance used

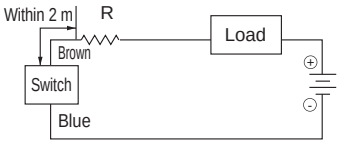

● Rush current limiting resistor
R = Largest resistor tolerated by load circuit side

● Resistance used
Within 2 m

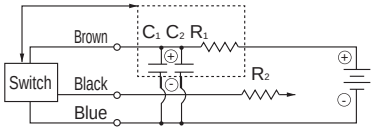

Power supply noise absorptive circuit
C_1 = 20 to 50μF
Electrolytic capacitor (Voltage resistance 50 V or more)
C_2 = 0.01 to 0.1μF
Ceramic capacitor
Rush current limiting resistor
R_1 = 20 to 30Ω
R_2 = Largest resistance tolerated by load circuit side used.

■ Pay attention to the service life of the reed switch.

● Although the service life of the reed switch differs depending on usage conditions, it is generally approx. several million times. The contact service life is reached sooner if the device is used continuously or operated at a high frequency. In this case, use a proximity switch with no contact.

Mounting, installation and adjustment

⚠ CAUTION

■ Do not drop or apply impact.

Do not drop, bump, or apply excessive impact (294 m/s² or more for reed switches, 980 m/s² or more for proximity switches). Even if the switch case is not damaged, switch components could break or malfunction.

■ Do not carry the cylinder by the switch's lead wire.

Never do this: it not only causes disconnection of lead wires, but since stress is applied to the internal switch, it may also damage the switch internal element.

■ Do not wire together with power lines or high voltage lines.

Avoid the use of parallel wiring or wiring in the same conduit as that of power lines or high voltage lines. Wire separately. The control circuit containing the cylinder switch could malfunction due to noise.

■ Do not short-circuit the load.

If turned ON in a state of load short-circuit, excess current will flow and the switch will be instantly damaged.

■ Pay attention to the lead wire connection.

Turn OFF power to the device in the electric circuit to be connected before starting wiring. If operated while the power is turned ON, it may cause accidents due to electric shock or unpredicted operation.

● Reed switch

Do not connect the switch lead wire directly to the power supply. Connect the load serially. Pay attention to the following (1), (2) for RO, MO, TO, KO, EO, FO, ETO.

(1) When used for DC, connect the brown wire on the positive (+) side and the blue wire on the negative (-) side.
The switch will function when connected in reverse, but the indicator lamp will not turn ON. (There is no polarity for HO.)

(2) When connected to an AC relay or programmable controller input, conducting half wave rectification with that circuit may prevent the indicator lamp from turning ON. The indicator lamp will come ON when the switch lead's polarity is reversed.

● Proximity switch

Correctly connect the lead wires based on the color coding in the figure on the right.
Incorrect wiring could result in damage.

● R1

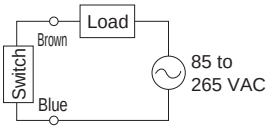

● R2 (Y), M2 (W), T2 (Y), T2J, K2 (Y), F2 (T2YD has no polarity)

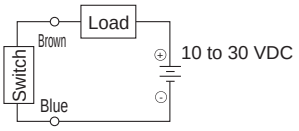

● R3(Y), M3(W), T3(Y), K3(Y), F3

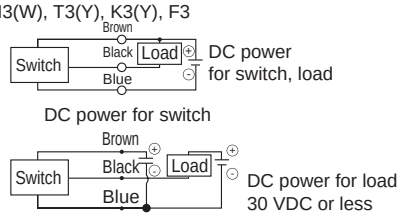

● T3P, K3P, M3P

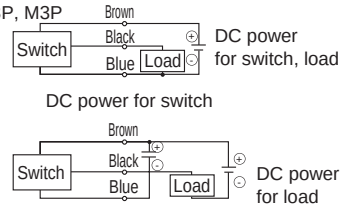

(Connection to programmable controller (PLC))

● Connection direction differs depending on the type of programmable controller. Connect based on input specifications.

● R1 connection to AC input

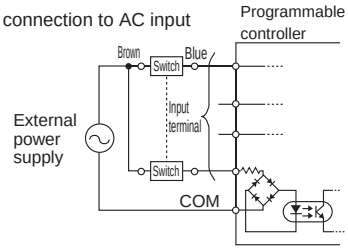

● Connection to source load input (external electric power supply)

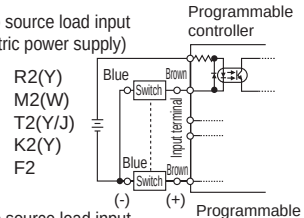

● Connection to source load input (internal electric power supply)

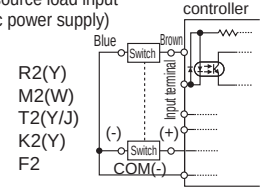

● Connection to sink input

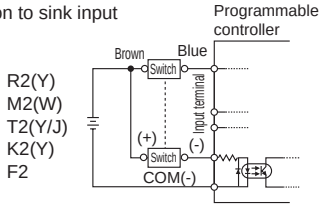

● Connection to source load input (external electric power supply)

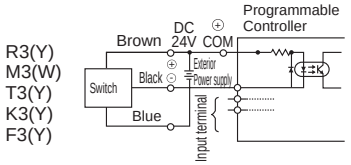

● Connection to source load input (internal electric power supply)

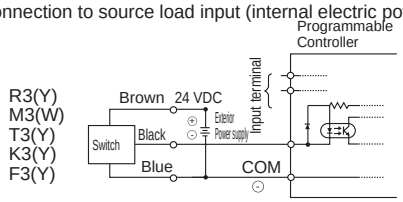

● Sink input (External power supply) Example of connection to type

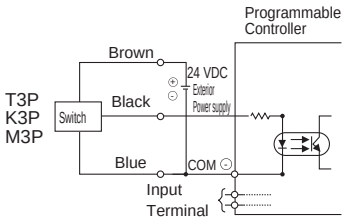

● Sink input (Built-in power supply) Example of connection to type

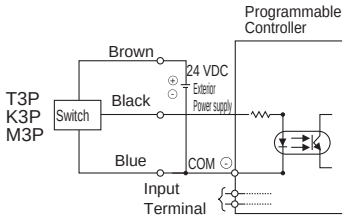

■ Set the switch to the center of the operation range.

Adjust the mounting position of the cylinder switch so that the piston stops at the center of the operating range (ON range). (Mounting position in the catalog shows the optimal position at stroke end.) If set at the end of the operating range (near the boundary line of ON, OFF), operation may become unstable.

■ Observe tightening torque when installing the switch.

If the tightening torque range is exceeded, the set screw, mounting bracket, switch, etc., could be damaged. In addition, if tightening the set screw with a torque less than the min. tightening torque, the switch mounting position could be displaced. (Refer to Ending Pages 42 and 43 for details on switch mounting, movement, tightening torque, etc.)

■ Pay attention to the terminal box wiring.

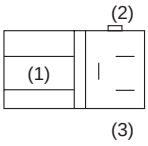

Model \ Terminal	(1)	(2)	(3)
R0(DC), R2, R2Y, R6		+	-
R 0(AC),R1,R 4,R 5		±	±
R 3,R3Y	OUT	+	-

■ Lead wire protection

The lead wire's min. bending radius is 9 mm or more (when fixed). Pay attention to wiring so repeated bending and tensile strain are not applied to the lead wire. Connect T2H/VR3 cylinder switch (models limited) with more flexible bend-resistant lead wire specifications to the moving parts for use.

■ Relay

Use the following or equivalent relays.

○OMRON Corporation ——— MY type
○Fuji Electric Co., Ltd. ——— HH5 type
○Tokyo Denki ——— MPM type
○Panasonic Co., Ltd. ——— HC type

1 . Precautions for "external force"

⚠CAUTION

■ When using the reed type in particular, the reed switch (glass tube) could be damaged or the sensitivity could be reduced.

Example: T0□ T5□ T8□Model

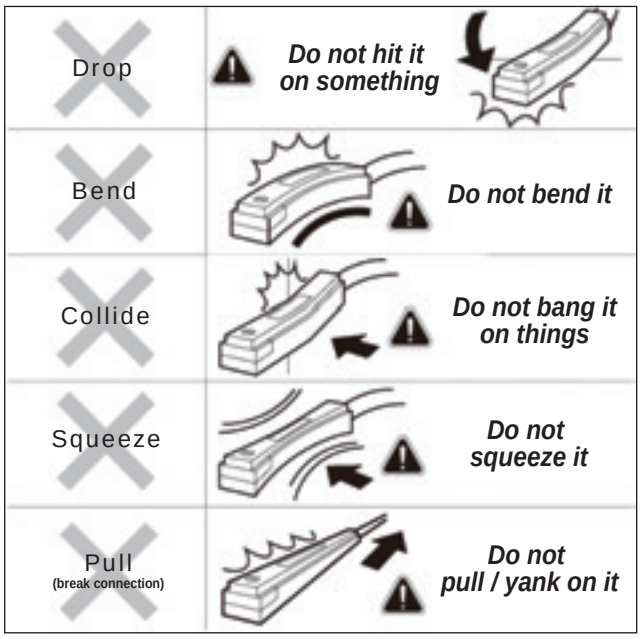

2 . Precautions regarding "overcurrent/overvoltage"

■ Do not connect directly to power supply.

■ Do not connect to the electromagnetic relay without a protection circuit.

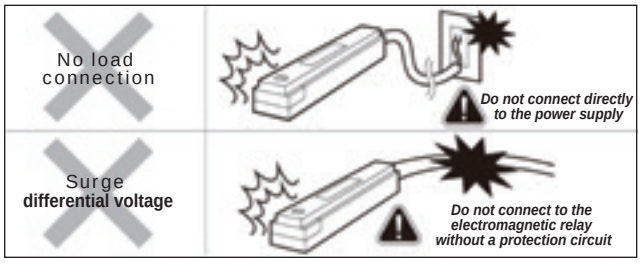

■ For electromagnetic relay and long wiring, install a "protection circuit".

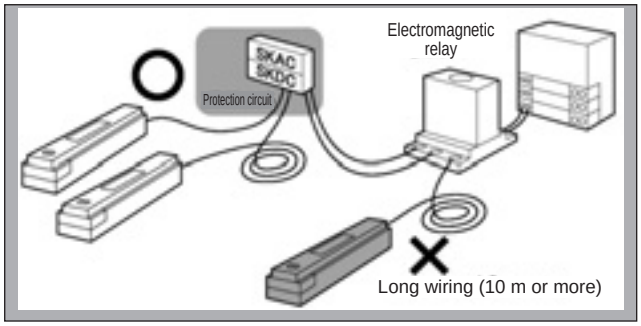

⚠ WARNING

■ Do not apply overcurrent.

If overcurrent flows to the cylinder switch because of a load short-circuit, etc., the cylinder switch will be damaged with a risk of ignition.
Provide an overcurrent protection circuit, such as a fuse, for the output wire and power cable as needed.

⚠ CAUTION

■ Pay attention to the reverse current caused by disconnected wires/wiring resistance.

● When other devices, including cylinder switches, are connected to the same power supply as the cylinder switch and the output cable and power cable are short-circuited or the power supply is disconnected to check operation of the input unit in the control panel, reverse current could flow to the cylinder switch's output circuit and cause damage.

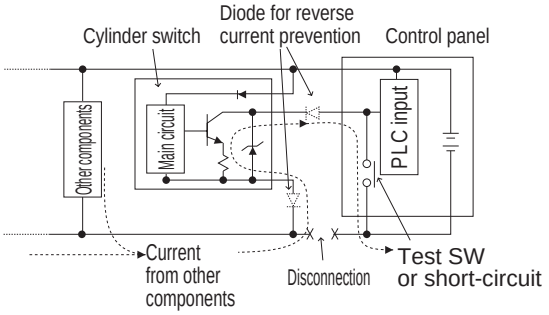

● Take the following measures to prevent damage caused by reverse current.

(1) Avoid centralizing current at the power cable, especially a negative power cable, and use as thick a cable as possible.
(2) Limit the number of devices connected to the same power supply as the cylinder switch.
(3) Insert a diode in serial with the cylinder switch's output cable to prevent reversal of current.
(4) Insert a diode in serial with the cylinder switch's power cable negative side to prevent reversal of current.

■ Pay attention to surge current leading.

● When cylinder switch power is shared with an inductive load that generates surges, such as a solenoid valve or relay, if the circuit is cut off while the inductive load is functioning, surge current could enter the output circuit and cause damage depending on where the surge absorbing element is installed.

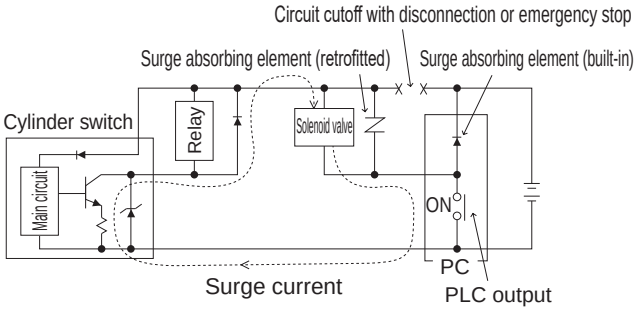

● Take the measures below to prevent damage from sneak surge current.

(1) Separate the power supply for the output system comprising the inductive load, such as the solenoid valve and relay, and the input system, such as the cylinder switch.
(2) If a separate power supply cannot be used, directly install a surge absorption element for all inductive loads. Consider that the surge absorption element connected to the PLC, etc., protects only the individual device.
(3) Connect a surge absorption element to places on the power wiring shown in the figure below, as a measure against disconnections in unspecified areas.

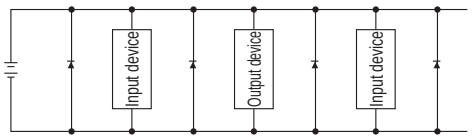

When devices are connected to a connector, the output circuit could be damaged by the above if the connector is disconnected while power is ON. Turn power OFF before connecting or disconnecting the connector.

Standard cylinder

	Page
Pencil shaped cylinder **SCP*3** Series	3
Medium bore size cylinder **CMK2** Series	81
Medium bore size cylinder **CMA2** Series	205
Round shaped cylinder **SCM** Series	227
Tie rod cylinder **SCG** Series	351
Medium bore size cylinder **SCA2** Series	443
Large bore size cylinder **SCS2** Series	621

SCP*3

Pencil shaped cylinder

ø6/ø10/ø16

Standard

Overview

The lightest miniature series with the smallest bore size (ø6 to ø16) among general purpose cylinders.

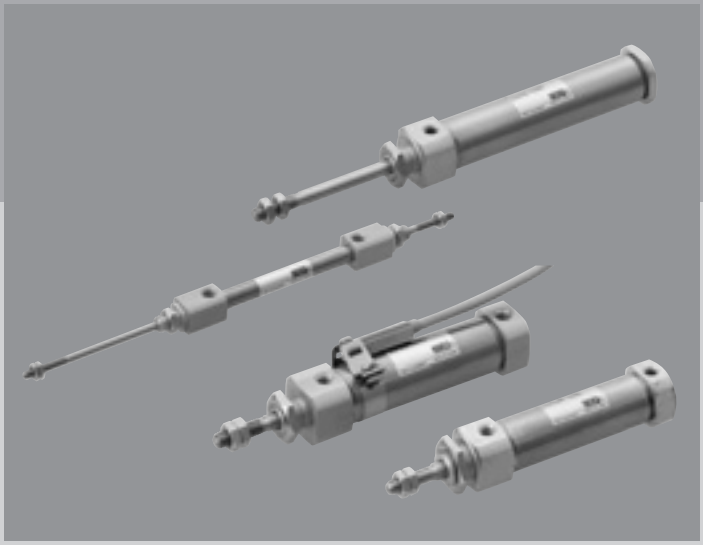

CONTENTS

Series variation	4
Variation and option combination selection table	6
Product introduction	7
● Double acting/single rod (SCPD3)	8
● Single acting/push (SCPS/SCPS3)	16
● Single acting/pull (SCPH3)	16
● Double acting/heat resistant (SCPD3-T)	26
● Double acting/rubber-air cushioned (SCPD3-*C)	28
● Double acting/fine speed (SCPD3-F)	34
● Double acting/low speed (SCPD3-O)	40
● Double acting/double rod (SCPD3-D)	44
● Double acting/double rod/heat resistance (SCPD3-DT)	44
● Double acting/with speed controller (SCPD3-Z)	50
● Single acting/push/rotation-stop (SCPS3-M)	56
● Double acting/rotation-stop (SCPD3-M)	56
● Double acting/high load (SCPD3-K)	64
● Single acting/with valve (SCPS3-V)	70
● Double acting/with valve (SCPD3-V)	70
SCP*3 Series common accessory dimensions	15
⚠ Safety precautions	78

Series variation

Pencil shaped cylinder SCP*3 Series

Variation	Model No. JIS symbol	Bore size (mm)	Standard stroke (mm) 15	30	45	60
Double acting/ single rod	SCPD3 SCPD3-L	ø6	●	●	●	●
		ø10	●	●	●	●
		ø16	●	●	●	●
Single acting/push	SCPS3 SCPS3-L	ø6	●	●	●	●
		ø10/ø16	●	●	●	●
Single acting/pull	SCPH3 SCPH3-L	ø6	●	●	●	●
		ø10/ø16	●	●	●	●
Double acting/heat resistant	SCPD3-T	ø6	●	●	●	●
		ø10	●	●	●	●
		ø16	●	●	●	●
Double acting/ rubber-air cushioned	SCPD3-*C SCPD3-L-*C	ø6	●	●	●	●
		ø10	●	●	●	●
		ø16	●	●	●	●
Double acting/fine speed	SCPD3-F SCPD3-LF	ø6	●	●	●	●
		ø10	●	●	●	●
		ø16	●	●	●	●
Double acting/low speed	SCPD3-O SCPD3-OL	ø6	●	●	●	●
		ø10	●	●	●	●
		ø16	●	●	●	●
Double acting/ double rod	SCPD3-D SCPD3-DL	ø6	●	●	●	●
		ø10/ø16	●	●	●	●
Single acting/ rotation-stop	SCPS3-M SCPS3-ML	ø10/ø16	●	●	●	●
Double acting/ rotation-stop	SCPD3-M SCPD3-ML	ø10	●	●	●	●
		ø16	●	●	●	●

Made to order

The following variations are also available.

Variation	Model No.	Bore size (mm)	Page
Double acting/ with valve	SCPD3-V SCPD3-VL	ø10	70
		ø16	
Single acting/ with valve	SCPS3-V SCPS3-VL	ø10	70
		ø16	
Double acting/ high load	SCPD3-K SCPD3-KL	ø6	64
		ø10	
		ø16	

Variation	Model No.	Bore size (mm)	Page
Double acting/with speed controller	SCPD3-Z SCPD3-ZL	ø10	50
		ø16	
Double acting/ double rod/heat resistance	SCPD3-DT	ø6	44
		ø10	
		ø16	
Double acting/ clean-room specifications	SCPD3-……P7* SCPD3-……P5*	ø6	Catalog No. CB-033SA
		ø10	
		ø16	

●: Standard, ◎: Option, ○: Made to order, ▒: Not available

Min. stroke (mm)	Max. stroke (mm)	Available stroke (mm)	Custom stroke (per mm)	Mounting: Basic 00	Mounting: Two-sided axial foot LB	Mounting: Axial foot (one side) Rod side LS	Mounting: Rod side flange FA	Mounting: Clevis bracket CB	Option: Copper and PTFE free P6	Accessory: Rod eye I	Accessory: Rod clevis Y	Accessory: Eye bracket B1	Accessory: Clevis bracket B2	Switch	Page
5	100	105	1	●		●	●		●					◎	8
	200	210		●		●	●	●	●	◎	◎	◎	◎		
	260	270		●		●	●	●	●	◎	◎	◎	◎		
5	100	105	1	●		●	●		●					◎	16
	120	120		●		●	●	●	●	◎	◎	◎	◎		
5	100	105	1	●		●	●		●					◎	16
	120	120		●		●	●	●	●	◎	◎	◎	◎		
5	100	100	1	●		●	●								26
	200	200		●		●	●	●		◎	◎	◎	◎		
	260	260		●		●	●	●		◎	◎	◎	◎		
5	100	100	1	●		●	●							◎	28
	200	200		●		●	●	●	●	◎	◎	◎	◎		
	260	260		●		●	●	●		◎	◎	◎	◎		
5	100	100	1	●		●	●							◎	34
	200	200		●		●	●	●		◎	◎	◎	◎		
	260	260		●		●	●	●		◎	◎	◎	◎		
5	100	100	1	●		●	●							◎	40
	200	200		●		●	●	●		◎	◎	◎	◎		
	260	260		●		●	●	●		◎	◎	◎	◎		
5	60	60	1	●	●	●	●		●					◎	44
	120	120		●	●	●	●		●	◎	◎				
5	120	120	1	●		●	●	●	●	◎	◎	◎	◎	◎	56
5	200	210	1	●		●	●	●	●	◎	◎	◎	◎	◎	56
	260	270		●		●	●	●	●	◎	◎	◎	◎		

Variation and option combination selection table

◎: Option
○: Available (made-to-order product)
△: Available depending on conditions (Contact CKD.)
x: Not available

Category		Category	Variation														Port thread			Cushion			Option					
			Double acting single rod	Single acting push	Single acting pull	Double acting double rod	Rotation-stop	With speed controller	With valve	With cylinder switch	High load	Heat resistance (120°C)	Low speed	Fine speed			NPT	G		Rubber-air cushioned			Rod nut material stainless steel	Axial port position	Copper and PTFE free	Clean-room specifications (exhaust port)	Clean-room specifications (vacuum treatment)	Specify piston rod end form
		Code	None	S	H	D	M	Z	V	L	K	T	O	F			N	G		C			M	O	P6	P7	P71	N*
Variation	Double acting single rod	SCPD3		*1	*1												x	x					○	◎	*5	○	○	○
Variation	Single acting push	SCPS3				x	◎	x	○	◎	x	x	x	x			x	x		x			○	◎	*5	x	x	○
Variation	Single acting pull	SCPH3				x	x	x	x	◎	x	x	x	x			x	x		x			○	x	*5	x	x	○
Variation	Double acting double rod	SCPD3-D					◎	○	x	◎	○	○	*2	*2			x	x		○			○	x	*5	○	○	○
Variation	Rotation-stop	M						x	○	◎	x	x	*2	x			x	x		○			○	◎	*5	x	x	○
Variation	With speed controller	Z							x	○	x	x	○	x			x	x		x			○	○	*5	x	x	○
Variation	With valve	V								○	○	x	x	x			x	x		x			○	*6	○	x	x	○
Variation	With cylinder switch	L									○	x	◎	◎			x	x		◎			○	○	*5	○	○	○
Variation	High load	K										x	*2	*2			x	x		○			○	○	x	x	x	○
Variation	Heat resistance (120°C)	T											x	x			x	x		x			○	◎	x	x	x	○
Variation	Low speed	O												x			x	x		*4			○	◎	x	*2	○	○
Variation	Fine speed	F															x	x		*4			○	○	x	*2	○	○
Port thread	NPT	N																x		x			x	x	x	x	x	x
Port thread	G	G																		x			x	x	x	x	x	x
Cushion	Rubber-air cushioned	C																					○	◎	*5	○	○	○
Option	Rod nut material stainless steel	M																						○	○	○	○	*3
Option	Axial port position	O																							◎		○	○
Option	Copper and PTFE free	P6																								x	x	○
Option	Clean-room specifications (exhaust port)	P7																									x	○
Option	Clean-room specifications (vacuum treatment)	P71																										○
Option	Specify piston rod end form	N**																										
Accessory	Cylinder switch	Listed separately	◎	◎	◎	◎	◎	○	○	◎	○	x	◎	◎									◎	◎	◎	○	○	◎
Accessory	Rod eye	I	◎	◎	◎	◎	◎	○	○	◎	○	◎	◎	◎									◎	◎	◎	x	x	*3
Accessory	Rod clevis	Y	◎	◎	◎	◎	◎	○	○	◎	○	◎	◎	◎									◎	◎	◎	x	x	*3
Accessory	B1 bracket	B1	◎	◎	◎	◎	◎	○	○	◎	○	◎	◎	◎									◎	◎	◎	x	x	◎
Accessory	B2 bracket	B2	◎	◎	◎	◎	◎	○	○	◎	○	◎	◎	◎									◎	◎	◎	x	x	◎

Caution
*1 : Available when the single acting (S/H) is used as double acting. The total length will be longer if the single acting is used as reference.
*2 : The friction resistance will be higher than that of the standard low speed (or fine speed).
Check the working conditions and consult with CKD.
*3 : Consult with CKD if the piston rod end thread size changes.
*4 : The expected low speed performance cannot be obtained in the cushion area.
*5 : Copper and PTFE free as standard. (P6 code is not required.)
*6 : The type with valve is available only for the axial port position. (O code is not required.)
*7 : For P7 and P71 clean room specifications, refer to “Components for clean room specifications” (catalog No. CB-033SA).

[Example of model No.]

SCPD3 - D M L F - FA - 10 - 50 - ◯ - T2H3 - D - Y

- Ⓐ Model No. (SCPD3)
- Variation (D M L F)
- Ⓑ Mounting (FA)
- Ⓒ Bore size (10)
- Ⓓ Stroke (50)
- Ⓔ Head side port direction (◯)
- Ⓕ Switch model No. (T2H3)
- Ⓖ Switch quantity (D)
- Ⓗ Accessory (Y)
- Option

* Indicate codes from left to right in the left table.
* For fine speed, insert "F" after the switch code.

Indicate codes from left to right in the left table.

Ⓐ Model No.	: Pencil shaped cylinder
● Variation	: Double rod/rotation-stop/with switch/fine speed
Ⓑ Mounting	: Rod side flange
Ⓒ Bore size	: ø10 mm
Ⓓ Stroke	: 50 mm
Ⓔ Head side port direction	: Vertical direction
Ⓔ Switch model No.	: Proximity switch T2H, lead wire length 3 m
Ⓖ Switch quantity	: 2 pcs. included
Ⓗ Accessory	: Rod clevis

* Option: None

Product introduction

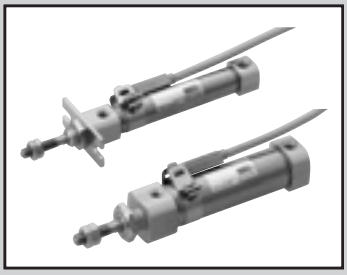

Pencil shaped cylinder/double acting/single rod

SCPD3 Series

● Bore size: ø6/ø10/ø16

JIS symbol

RoHS CAD

Specifications

Item		SCPD3 SCPD3-L		
Bore size	mm	ø6	ø10	ø16
Actuation		Double acting		
Working fluid		Compressed air		
Max. working pressure	MPa	1.0 (≈150 psi, 10 bar)		
Min. working pressure	MPa	0.15 (≈22 psi, 1.5 bar)	0.1 (≈15 psi, 1 bar)	
Proof pressure	MPa	1.6 (≈230 psi, 16 bar)		
Ambient temperature	°C	-10 (14°F) to 60 (140°F) (no freezing)		
Port size		M5		
Stroke tolerance	mm	+1.0 0		
Working piston speed	mm/s	50 to 750		
Cushion		Rubber cushion		
Lubrication		Not required (use turbine oil ISO VG32 if necessary for lubrication)		
Allowable absorbed energy	J	0.012	0.041	0.162

Stroke

Bore size (mm)		Standard stroke (mm)	Max. stroke (mm)	Available stroke (mm)	Min. stroke (mm)
SCPD3	ø6	15/30/45/60	100	105	5
	ø10		200	210	
	ø16		260	270	

*1: The custom stroke is available in 1 mm increments.

Min. stroke with switch

	1		2	
Sketch	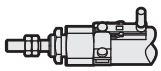 Rod side installation	Head side installation	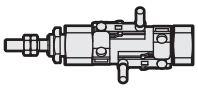 Different surface mounting	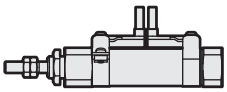 Same surface mounting
Min. stroke	5 mm		10 mm	28 mm

	3	
Sketch	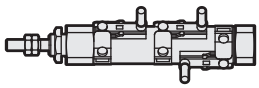 Different surface mounting	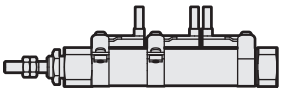 Same surface mounting
Min. stroke	38 mm	54 mm

Switch specifications

Item	2-wire proximity		3-wire proximity	
	T2H/T2V	T2WH/T2WV	T3H/T3V	T3WH/T3WV
Applications	Dedicated for programmable controller		For programmable controller, relay	
Output method	-		NPN output	
Power supply voltage	-		10 to 28 VDC	
Load voltage	10 to 30 VDC	24 VDC ±10%	30 VDC or less	
Load current	5 to 20 mA (*3)		100 mA or less	50 mA or less
Indicator	LED (Lit when ON)	Red/green LED (Lit when ON)	LED (Lit when ON)	Red/green LED (Lit when ON)
Leakage current	1 mA or less		10 μA or less	
Weight g	1 m:18 3 m:49 5 m:80		1 m:18 3 m:49 5 m:80	

Item	2-wire reed			
	T0H/T0V		T5H/T5V	
Applications	For programmable controller, relay		For programmable controller, relay, IC circuit (without indicator lamp), serial connection	
Load voltage	12/24 VDC	110 VAC	5/12/24 VDC	110 VAC
Load current	5 to 50 mA	7 to 20 mA	50 mA or less	20 mA or less
Indicator	LED (Lit when ON)		No indicator lamp	
Leakage current	0 mA		0 mA	
Weight g	1 m:18 3 m:49 5 m:80		1 m:18 3 m:49 5 m:80	

*1: Refer to Ending Page 1 for detailed switch specifications and dimensions.
*2: Switches other than the above models, such as switches with connectors, are also available. Refer to Ending Page 1.
*3: The max. load current is 20 mA at 25°C. The current is lower than 20 mA if the operating ambient temperature around the switch is higher than 25˚C. (5 to 10 mA at 60°C)

Cylinder weight

(Unit: g)

Item / Bore size (mm)	Mounting bracket weight: Foot L S	Flange FA	Clevis CB	Product weight when at 0 mm stroke	Additional weight per 10 mm stroke	Switch weight (per switch)	Mounting bracket weight
ø6	6	4	-	13	1	Refer to the weight in the switch specifications.	2
ø10	6	4	4	21	2		
ø16	15	12	10	42	3		

(Example) Product weight of SCPD3-L-LS-10-30-T0H-D
- Mounting bracket weight (foot) ..... 6 g
- Product weight for 0 mm stroke ..... 21 g
- Additional weight for 30 mm stroke ..... 2x30/10=6 g
- Switch weight ..... 2x(18+2)=40 g
- Product weight ..... 6+21+6+40=73 g

Theoretical thrust table

(Unit: N)

Bore size (mm)	Operating direction	Working pressure MPa 0.1	0.15	0.2	0.3	0.4	0.5	0.6	0.7	0.8	0.9	1.0
ø6	Push	–	4.24	5.65	8.48	11.3	14.1	17.0	19.8	22.6	25.4	28.3
	Pull	–	3.18	4.24	6.36	8.48	10.6	12.7	14.8	17.0	19.1	21.2
ø10	Push	7.85	11.8	15.7	23.6	31.4	39.3	47.1	55.0	62.8	70.7	78.5
	Pull	6.60	9.90	13.2	19.8	26.4	33.0	39.6	46.2	52.8	59.4	66.0
ø16	Push	20.1	30.2	40.2	60.3	80.4	1.01×10^2	1.21×10^2	1.41×10^2	1.61×10^2	1.81×10^2	2.01×10^2
	Pull	18.1	27.2	36.3	54.4	72.6	90.7	1.09×10^2	1.27×10^2	1.45×10^2	1.63×10^2	1.81×10^2

How to order

No switch (without magnet for switch)

SCPD3 - 00 - 10 - 15 - O ——— Y

With switch (built-in magnet for switch)

SCPD3-L - 00 - 10 - 15 - O - T2H - R - Y

Ⓐ Model No.

Ⓑ Mounting *1

Ⓒ Bore size

Ⓓ Stroke

Ⓔ Head side port direction *1

Ⓕ Switch model No. *3, *6
* indicates the lead wire length.

Ⓖ Switch quantity

Ⓗ Accessory *4

Code	Description
Ⓐ Model No.	
SCPD3	Double acting
SCPD3-L	Double acting/with switch

Ⓑ Mounting

Bore size (ø)		6	10	16
00	Basic	●	●	●
LS	Axial foot (one side) (rod side)	●	●	●
FA	Rod side flange	●	●	●
CB	Clevis bracket (pin and snap ring incl.)		●	●

Ⓒ Bore size (mm)

6	ø6
10	ø10
16	ø16

Ⓓ Stroke (mm)

Bore size	Stroke *2	Available stroke	Custom stroke
ø6	**5 to 100**	**105**	In 1 mm increments
ø10	**5 to 200**	**210**	
ø16	**5 to 260**	**270**	

Ⓔ Head side port direction

Blank	Vertical
O	Axial direction

Ⓕ Switch model No.

Lead wire Straight	Lead wire L-shaped	Contact	Voltage AC	Voltage DC	Indicator	Lead wire
T0H*	**T0V***	Reed	●	●	1-color LED	2-wire
T5H*	**T5V***		●	●	No indicator lamp	
T2H*	**T2V***	Proximity		●	1-color LED	2-wire
T3H*	**T3V***			●		3-wire
T2WH*	**T2WV***			●	2-color LED	2-wire
T3WH*	**T3WV***			●		3-wire

*** Lead wire length**

Blank	1 m (standard)
3	3 m (option)
5	5 m (option)

Ⓖ Switch quantity

R	1 on rod side
H	1 on head side
D	2
T	3

Ⓗ Accessory

Bore size (ø)		6	10	16
I	Rod eye		●	●
Y	Rod clevis (pin and snap ring included)		●	●
B1	Eye bracket		●	●
B2	Clevis bracket		●	●

Precautions for model No. selection

*1 : The "CB" mounting is not available when the port direction is "0" (axial direction).
*2 : Refer to page 8 for the min. stroke with switch.
*3 : Magnet is not built into the type without switch.
*4 : "I" and "Y" cannot be selected together.
*5 : Copper and PTFE free as standard.
*6 : Switches are shipped with the product.

[Example of model No.]
SCPD3-L-00-10-30-O-T2H-R-I
Model: Pencil shaped cylinder

Ⓐ Model No.	: Double acting
Ⓑ Mounting	: Basic
Ⓒ Bore size	: ø10 mm
Ⓓ Stroke	: 30 mm
Ⓔ Head side port direction	: Axial direction
Ⓕ Switch model No.	: Proximity switch T2H, lead wire 1 m
Ⓖ Switch quantity	: 1 on rod side
Ⓗ Accessory	: Rod eye

How to order switch

● Switch body + mounting bracket set

SCPD3 - T0H - 6

Bore size (Item Ⓒ on page 10)

Switch model No. (Item Ⓕ on page 10)

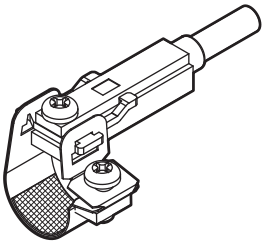

● Switch body (with fixing bracket)

SCPD3 - T0H

Switch model No. (Item Ⓕ on page 10)

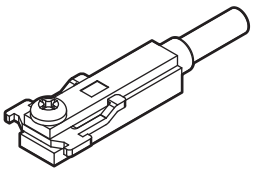

Note) The fixing bracket and cross-recessed pan head machine screw are different from those for the T standard switch.

● Mounting bracket set + fixing bracket

SCPD3 - TS - 6

Bore size (Item Ⓒ on page 10)

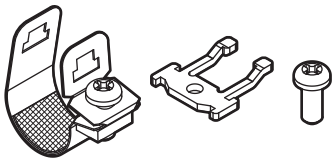

When 20 pcs or more are ordered, they will be packed together.

● Mounting bracket set

SCPD3 - T - 6

Bore size (Item Ⓒ on page 10)

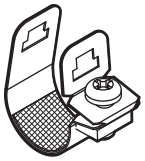

When 20 pcs or more are ordered, they will be packed together.

How to order mounting bracket

Bore size (mm) / Mounting bracket	ø6	ø10	ø16
Foot (LS)	P2-LS-6	P2-LS-10	P2-LS-16
Flange (FA)	P2-FA-6	P2-FA-10	P2-FA-16

Note: The foot (LS) mounting bracket is provided as 1 pc./set.

Internal structure and parts list

● Double acting
SCPD3-(L)

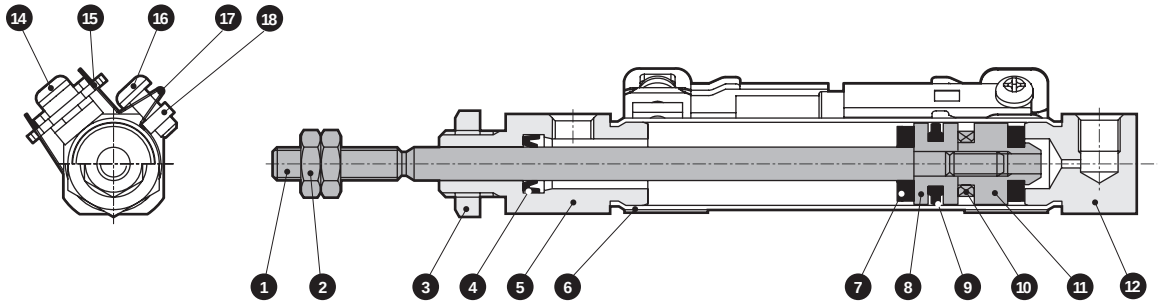

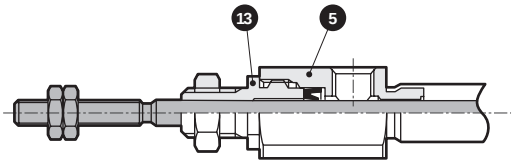

For ø6

Cannot be disassembled

● This product cannot be disassembled.

No.	Part name	Material	Remarks	No.	Part name	Material	Remarks
1	Piston rod	Stainless steel		10	Magnet	-	With switch only
2	Rod nut	Steel	Nickeling	11	Spacer	Aluminum alloy	
3	Hexagon nut	Steel	Nickeling	12	Head cover	Aluminum alloy	Hard alumite
4	Rod packing	Nitrile rubber		13	Rod metal	Aluminum alloy	Hard alumite
5	Rod cover	Aluminum alloy	Hard alumite	14	Philips pan head machine screw	Stainless steel	With switch only
6	Cylinder tube	Stainless steel		15	Fixing bracket	Stainless steel	With switch only
7	Cushion rubber	Urethane rubber		16	Philips pan head machine screw	Stainless steel	With switch only
8	Piston	Aluminum alloy		17	Band	Stainless steel	With switch only
9	Piston packing	Nitrile rubber		18	Fixing nut	Stainless steel	With switch only

Dimensions

● SCPD3-(L) Basic (00)

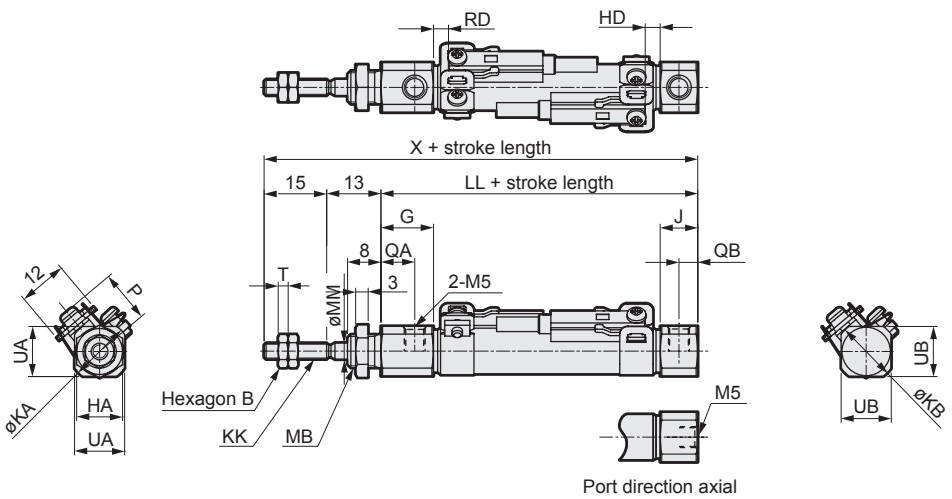

*1 : The dimensions are the same in the type without switch. (Magnet is not built in.)
*2 : As the thread depth of ø6/ø10 port is 3.8 mm, use a fitting with 3.8 mm or less thread length if necessary.
*3 : For the dimensions of the accessories, refer to page 15.
*4 : Values shown in ( ) are for the type with axial port direction.

Code	Basic (00) Basic dimensions																With switch				
Bore size (mm)	B	G	HA	J	KA	KB	KK	LL	MB	MM	QA	QB	T	UA	UB	X	T0, T5, T2, T3		T2W, T3W		P
																	RD	HD	RD	HD	
ø6	5.5	17	8	8	13.5	13.5(10)	M3	47	M6	3	13	4	1.8	11	11(9)	75	2	2	4	3.5	11.5
ø10	7	12.5	11	9	14.5	14.5	M4	46	M8x1.0	4	8	4.5	2.4	12	12	74	3.5	2.5	5.5	4	13.5
ø16	8	13	14	9	21.5	21.5	M5	46	M10x1.0	5	8.5	4.5	3.2	18	18	74	2	3.5	3.5	5	17.0

● Axial foot (single) (LS)

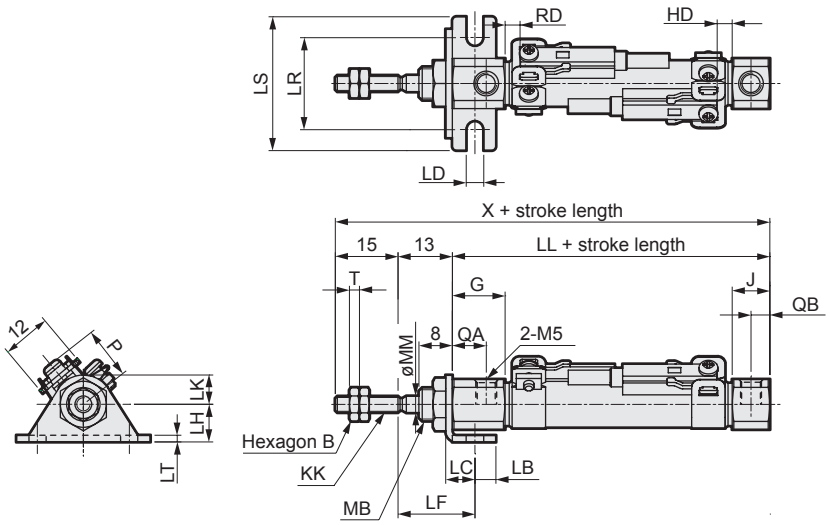

*1 : The dimensions are the same in the without switch. (Magnet is not built in.)
*2 : As the thread depth of ø6/ø10 port is 3.8 mm, use a fitting with 3.8 mm or less thread length if necessary.
*3 : For the dimensions of the accessories, refer to page 15.

Code	Axial foot (single) (LS) Basic dimensions										Mounting dimensions										With switch				
Bore size (mm)	B	G	J	KK	MB	MM	QA	QB	T	X	LB	LC	LD	LF	LL	LH	LK	LR	LS	LT	T0, T5, T2, T3		T2W, T3W		P
																					RD	HD	RD	HD	
ø6	5.5	17	8	M3	M6	3	13	4	1.8	75	5	7	4.2	18.4	47	9	7	22	32	1.6	2	2	4	3.5	11.5
ø10	7	12.5	9	M4	M8x1.0	4	8	4.5	2.4	74	5	7	4.2	18.4	46	9	7	22	32	1.6	3.5	2.5	5.5	4	13.5
ø16	8	13	9	M5	M10x1.0	5	8.5	4.5	3.2	74	6	9	5.2	19.7	46	14	10	29	42	2.3	2	3.5	3.5	5	17.0

Dimensions

● Rod side flange (FA)

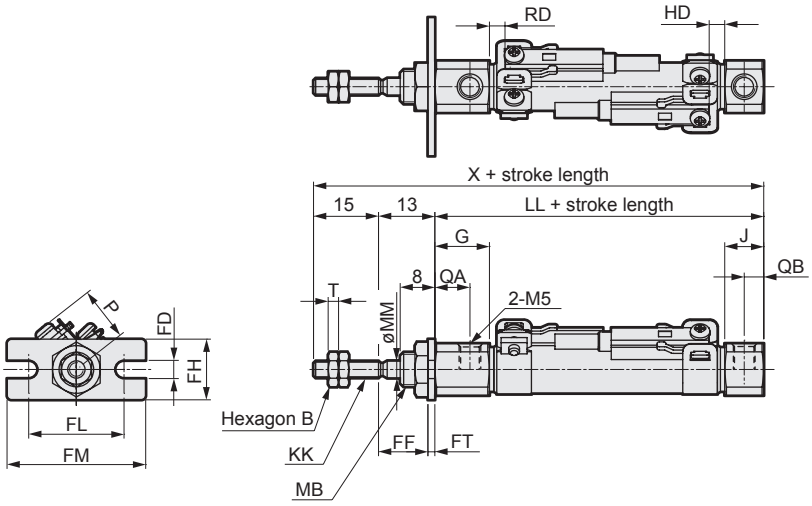

*1 : The dimensions are the same in the type without switch. (Magnet is not built in.)
*2 : As the thread depth of ø6/ø10 port is 3.8 mm, use a fitting with 3.8 mm or less thread length if necessary.
*3 : For the dimensions of the accessories, refer to page 15.

Code / Bore size (mm)	Rod side flange (FA) Basic dimensions											Mounting dimensions						With switch				
	B	G	J	KK	LL	MB	MM	QA	QB	T	X	FD	FF	FH	FL	FM	FT	T0, T5, T2, T3		T2W, T3W		P
																		RD	HD	RD	HD	
ø6	5.5	17	8	M3	47	M6	3	13	4	1.8	75	4.2	11.4	14	22	32	1.6	2	2	4	3.5	11.5
ø10	7	12.5	9	M4	46	M8x1.0	4	8	4.5	2.4	74	4.2	11.4	14	22	32	1.6	3.5	2.5	5.5	4	13.5
ø16	8	13	9	M5	46	M10x1.0	5	8.5	4.5	3.2	74	5.2	10.7	20	29	42	2.3	2	3.5	3.5	5	17.0

● Clevis bracket (CB)

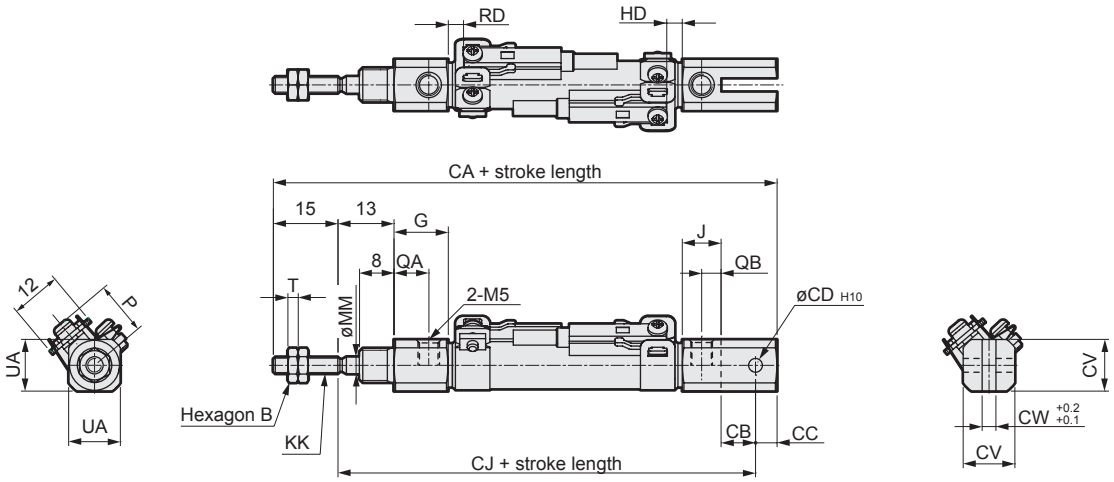

*1 : The dimensions are the same in the type without switch. (Magnet is not built in.)
*2 : As the thread depth of ø6/ø10 port is 3.8 mm, use a fitting with 3.8 mm or less thread length if necessary.
*3 : A pin and retaining bracket are included.
*4 : For the dimensions of the accessories, refer to page 15.

Code / Bore size (mm)	Clevis bracket (CB) Basic dimensions									Mounting dimensions							With switch				
	B	G	J	KK	MM	QA	QB	T	UA	CA	CB	CC	CD	CJ	CV	CW	T0, T5, T2, T3		T2W, T3W		P
																	RD	HD	RD	HD	
ø10	7	12.5	9	M4	4	8	4.5	2.4	12	87	8	5	3.2	67	12	3.2	3.5	2.5	5.5	4	13.5
ø16	8	13	9	M5	5	8.5	4.5	3.2	18	94	10	10	5	69	18	6.5	2	3.5	3.5	5	17.0

Dimensions

● Rod eye (I) Material: Steel
Zinc chromate treatment

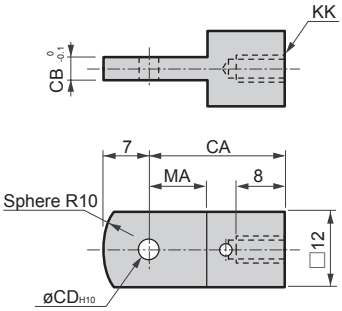

Model No.	Bore size (mm)	CA	CB	CD	KK	MA	Wt. (g)
P2-I-10	ø10	21	3.1	3.2	M4	9	17
P2-I-16	ø16	25	6.4	5	M5	14	21

● Rod clevis (Y) Material: Steel
Zinc chromate treatment

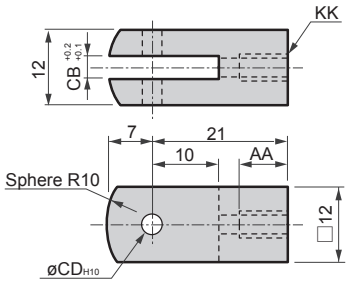

Note: A pin and a snap ring are included.

Model No.	AA	CB	CD	KK	Wt. (g)
P2-Y-10	8	3.2	3.2	M4	25
P2-Y-16	11	6.5	5	M5	20

● Rod eye
Pin (P) for bracket
Clevis Material: Stainless steel

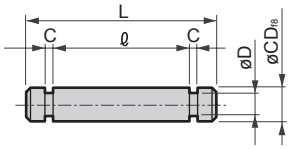

*1: A pin and a retaining bracket for rod clevis use are included with the product.
*2: A snap ring is included.

Model No.	Bore size (mm)	Applicable	C	D	CD	ℓ	L	Wt. (g)
P2-P-10	10	Rod eye/bracket/clevis	0.6	2.5	3.2	13	17	1.2
P2-P-10Z		Clevis for Z				16	20	1.4
P2-P-16	16	Rod eye/bracket	0.7	4	5	13	18	3.0
P2-P-16A		Clevis	0.7	4	5	19	24	3.9

● Clevis bracket (B2) Material: Steel
Zinc chromate treatment

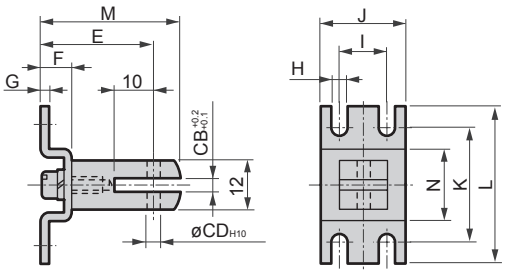

Note: A pin and a snap ring are included.

Model No.	Bore size (mm)	CD	E	CB	F	G	H	I	J	K	L	M	N	Wt. (g)
P2-B2-10	ø10	3.2	29	3.2	8	2	4.2	12	22	30.2	40	36	18	44
P2-B2-16	ø16	5	31	6.5	10	2.3	5.2	16	28	35.2	48	38	20	44

● Eye bracket (B1) Material: Steel
Zinc chromate treatment

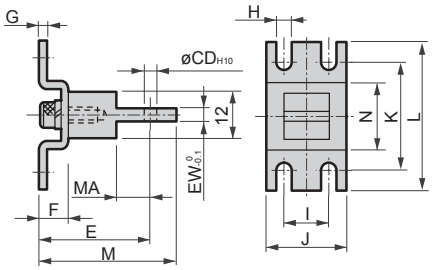

Model No.	Bore size (mm)	CD	E	EW	F	G	H	I	J	K	L	M	N	MA	Wt. (g)
P2-B1-10	ø10	3.2	29	3.1	8	2	4.2	12	22	30.2	40	36	18	9	37
P2-B1-16	ø16	5	35	6.4	10	2.3	5.2	16	28	35.2	48	42	20	14	48

● Hose nipple for pencil shaped cylinder (sales unit is 10 pcs./bag)

● Barbed fitting

Straight/FCS

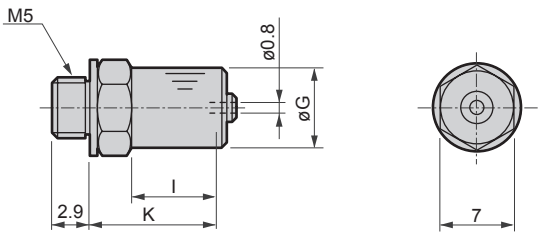

Elbow/FCL

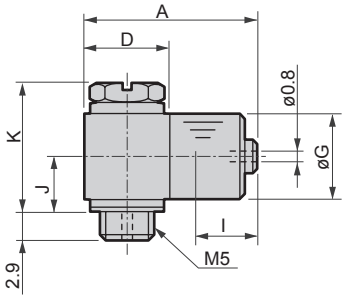

Model No.	Compatible tube O.D.	G	I	K	Weight (g)	Eff. X-sectional area (mm²)
FCS4-M5P	ø4	7	4.3	11.7	3.2	0.35
FCS6-M5P	ø6	9	5	12.4	4.5	0.35

Model No.	Tube O.D.	A	D	G	I	J	K	Weight (g)	Eff. X-sectional area (mm²)
FCL4-M5P	ø4	16.1	8	7	4.3	5.1	11.6	6.8	0.35
FCL6-M5P	ø6	17.8	9	9	5	6.1	13.6	10.1	0.35

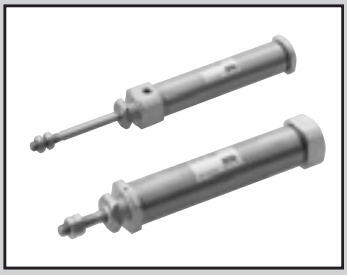

Pencil shaped cylinder Single acting/push and single acting/pull

SCPS/SCPS3/SCPH3 Series

● Bore size: ø2.5/ø4/ø6/ø10/ø16

JIS symbol

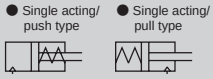

RoHS CAD

Specifications

1 MPa = 10 bar

Item		SCPS		SCPS3 SCPS3-L			SCPH3 SCPH3-L		
Bore size	mm	ø2.5	ø4	ø6	ø10	ø16	ø6	ø10	ø16
Actuation		Single acting/push					Single acting/pull		
Working fluid		Compressed air							
Max. working pressure	MPa	1.0 (≈150 psi, 10 bar)							
Min. working pressure	MPa	0.35 (≈51 psi, 3.5 bar)		0.3 (≈44 psi)	0.15 (≈22 psi, 1.5 bar)		0.39 (≈57 psi)	0.2 (≈29 psi, 2 bar)	
Proof pressure	MPa	1.6 (≈230 psi, 16 bar)							
Ambient temperature	°C	-10 (14°F) to 60 (140°F) (no freezing)							
Port size		Fitting for tube (tube ø2.5 x ø4)		M5					
Stroke tolerance	mm	+0.5 0		+1.0 0					
Working piston speed	mm/s	50 to 300		50 to 750					
Cushion		None		Rubber cushion					
Lubrication		Not required (use turbine oil ISO VG32 if necessary for lubrication)							
Allowable absorbed energy	J	1.5×10^{-4}	4×10^{-4}	0.012	0.041	0.162	0.012	0.041	0.162

*1: Do not leave the single acting cylinder pressurized for long periods. If it is left pressurized for long periods, the piston rod may not return due to spring load when the pressure is released.

Stroke

Bore size (mm)		Standard stroke (mm)	Max. stroke (mm)	Min. stroke (mm)
SCPS	ø2.5	5/10	10	5
	ø4	15/10/15/20	20	
SCPS3 SCPH3	ø6	15/30/45/60	100	
	ø10		120	
	ø16			

*1: The custom stroke is available in 1 mm increments.

Min. stroke with switch

	1		2	
Sketch	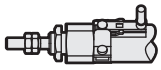 Rod side installation	Head side installation	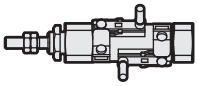 Different surface mounting	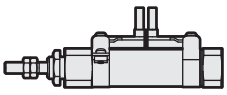 Same surface mounting
Min. stroke	5 mm		10 mm	28 mm

	3	
Sketch	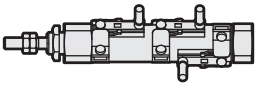 Different surface mounting	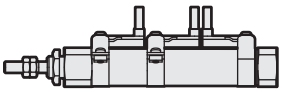 Same surface mounting
Min. stroke	38 mm	54 mm

Spring load of single acting (SCPS/SCPS3/SCPH3)

(Unit: N)

Bore size (mm)	At stroke of 0 mm	At full stroke operation
ø2.5	0.73	1.17
ø4	1.76	2.84
ø6	1.7	3.7
ø10	3.2	7.5
ø16	6.4	14.9

Switch specifications

Item	2-wire proximity		3-wire proximity	
	T2H/T2V	T2WH/T2WV	T3H/T3V	T3WH/T3WV
Applications	Dedicated for programmable controller		For programmable controller, relay	
Output method	-		NPN output	
Power supply voltage	-		10 to 28 VDC	
Load voltage	10 to 30 VDC	24 VDC ±10%	30 VDC or less	
Load current	5 to 20 mA (*3)		100 mA or less	50 mA or less
Indicator	LED (Lit when ON)	Red/green LED (Lit when ON)	LED (Lit when ON)	Red/green LED (Lit when ON)
Leakage current	1 mA or less		10 μA or less	
Weight g	1 m:18 3 m:49 5 m:80		1 m:18 3 m:49 5 m:80	

Item	2-wire reed			
	T0H/T0V		T5H/T5V	
Applications	For programmable controller, relay		For programmable controller, relay, IC circuit (without indicator lamp), serial connection	
Load voltage	12/24 VDC	110 VAC	5/12/24 VDC	110 VAC
Load current	5 to 50 mA	7 to 20 mA	50 mA or less	20 mA or less
Indicator	LED (Lit when ON)		No indicator lamp	
Leakage current	0 mA		0 mA	
Weight g	1 m:18 3 m:49 5 m:80		1 m:18 3 m:49 5 m:80	

*1: Refer to Ending Page 1 for detailed switch specifications and dimensions.
*2: Switches other than the above models, such as switches with connectors, are also available. Refer to Ending Page 1.
*3: The max. load current is 20 mA at 25°C. The current is lower than 20 mA if the operating ambient temperature around the switch is higher than 25˚C. (5 to 10 mA at 60°C)

Cylinder weight

● SCPS3/SCPH3 (Unit: g)

Item / Bore size (mm)	Mounting bracket weight: Foot LS	Flange FA	Clevis CB	Product weight when at 0 mm stroke	Additional weight per 10 mm stroke	Switch weight (per switch)	Mounting bracket weight
ø6	6	4	-	9	2	Refer to the weight in the switch specifications.	2
ø10	6	4	4	20	4		
ø16	15	12	10	35	8		

(Example) Product weight of SCPS3-L-LS-10-30-T0H-D
- ● Mounting bracket weight (foot) ..... 6 g
- ● Product weight for 0 mm stroke ..... 20 g
- ● Additional weight for 30 mm stroke ..... 4x30/10=12 g
- ● Switch weight ..... 2x(18+2)=40 g
- ● Product weight ..... 6+20+12+40=78 g

● SCPS (Unit: g)

Stroke / Bore size (mm)	5st	10st
ø2.5	1.6	1.7
ø4	7	8

Theoretical thrust table

● SCPS (Unit: N)

Bore size (mm)	Working pressure MPa 0.35	0.4	0.5	0.6	0.7	0.8	0.9	1.0
ø2.5	0.694	0.793	1.28	1.78	2.27	2.76	3.25	3.74
ø4	1.92	2.19	3.44	4.70	5.96	7.21	8.47	9.73

● SCPS3

Bore size (mm)	Working pressure MPa 0.15	0.2	0.3	0.4	0.5	0.6	0.7	0.8	0.9	1.0
ø6	-	-	4.8	7.6	10.4	13.3	16.1	18.9	21.7	24.6
ø10	6.2	8.2	16.1	23.9	31.8	39.6	47.5	55.3	63.2	71.0
ø16	19.0	25.3	45.4	65.5	85.6	105.7	125.8	145.9	166.1	186.2

● SCPH3

Bore size (mm)	Working pressure MPa 0.2	0.3	0.4	0.5	0.6	0.7	0.8	0.9	1.0
ø6	-	-	4.8	6.9	9.0	11.1	13.3	15.4	17.5
ø10	5.7	12.3	18.9	25.5	32.1	38.7	45.3	51.9	58.5
ø16	21.4	39.5	57.7	75.8	94.0	112.1	130.2	148.4	166.5

SCP*3
CMK2
CMA2
SCM
SCG
SCA2
SCS2
CKV2
CAV2/COVP/N2
SSD2
SSG
SSD
CAT
MDC2
MVC
SMG
MSD/MSDG
FC*
STK
SRL3
SRG3
SRM3
SRT3
MRL2
MRG2
SM-25
ShkAbs
FJ
FK
Spd Contr
Ending

How to order

SCPS - 00 - 2.5 - 5

Ⓐ Mounting
Ⓑ Bore size
Ⓒ Stroke

Code	Description
Ⓐ Mounting	
00	Basic
Ⓑ Bore size (mm)	
2.5	ø2.5
4	ø4

Ⓒ Stroke (mm)			
Bore size		**ø2.5**	**ø4**
5	5	●	●
10	10	●	●
15	15		●
20	20		●

[Example of model No.]

SCPS-00-2.5-5

Model: Pencil shaped cylinder Single acting/push
Ⓐ Mounting : Basic
Ⓑ Bore size : ø2.5 mm
Ⓒ Stroke : 5 mm

How to order switch

● Switch body + mounting bracket set

SCPD3 - T0H - 6

Bore size (Item Ⓒ on page 19)
Switch model No. (Item Ⓕ on page 19)

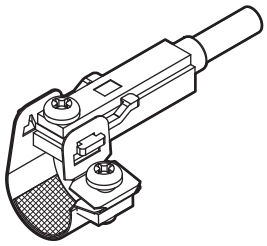

● Switch body (with fixing bracket)

SCPD3 - T0H

Switch model No. (Item Ⓕ on page 19)

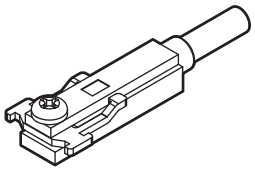

Note) The fixing bracket and cross-recessed pan head machine screw are different from those for the T standard switch.

● Mounting bracket set + fixing bracket

SCPD3 - TS - 6

Bore size (Item Ⓒ on page 19)

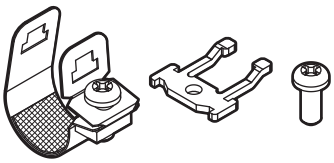

When 20 pcs or more are ordered, they will be packed together.

● Mounting bracket set

SCPD3 - T - 6

Bore size (Item Ⓒ on page 19)

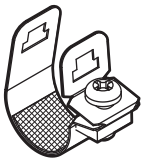

When 20 pcs or more are ordered, they will be packed together.

How to order mounting bracket

Bore size (mm) / Mounting bracket	ø6	ø10	ø16
Foot (LS)	P2-LS-6	P2-LS-10	P2-LS-16
Flange (FA)	P2-FA-6	P2-FA-10	P2-FA-16

Note: The foot (LS) mounting bracket is provided as 1 pc./set.

How to order

No switch (without magnet for switch)

SCPS3 - 00 - 10 - 15 - O ———— Y

With switch (built-in magnet for switch)

SCPS3-L - 00 - 10 - 15 - O - T2H - R - Y

Ⓐ Model No.

Ⓑ Mounting *1

Ⓒ Bore size

Ⓓ Stroke

Ⓔ Head side port direction *1

Ⓕ Switch model No. *3, *6
* indicates the lead wire length.

Ⓖ Switch quantity

Ⓗ Accessory *4

Code	Description
Ⓐ Model No.	
SCPS3	Single acting/push
SCPS3-L	Single acting/push/with switch
SCPH3	Single acting/pull
SCPH3-L	Single acting/pull/with switch

Ⓑ Mounting

	Bore size (ø)	6	10	16
00	Basic	●	●	●
LS	Axial foot (one side) (rod side)	●	●	●
FA	Rod side flange	●	●	●
CB	Clevis bracket (pin and snap ring included)		●	●

Ⓒ Bore size (mm)

6	ø6
10	ø10
16	ø16

Ⓓ Stroke (mm)

Bore size	Stroke *2	Available stroke	Custom stroke
ø6	**5 to 100**	**105**	In 1 mm increments
ø10	**5 to 120**	**120**	
ø16	**5 to 120**	**120**	

Ⓔ Head side port direction

Blank	Vertical
O	Axial direction “not available for SCPH3(-L)”

Ⓕ Switch model No.

Axial lead wire	Radial lead wire	Contact	Voltage AC	Voltage DC	Indicator	Lead wire
T0H*	**T0V***	Reed	●	●	1-color LED	2-wire
T5H*	**T5V***		●	●	No indicator lamp	
T2H*	**T2V***	Proximity		●	1-color LED	2-wire
T3H*	**T3V***			●		3-wire
T2WH*	**T2WV***			●	2-color LED	2-wire
T3WH*	**T3WV***			●		3-wire

*** Lead wire length**

Blank	1 m (standard)
3	3 m (option)
5	5 m (option)

Ⓖ Switch quantity

R	1 on rod side
H	1 on head side
D	2
T	3

Ⓗ Accessory

	Bore size (ø)	6	10	16
I	Rod eye		●	●
Y	Rod clevis (pin and snap ring included)		●	●
B1	Eye bracket		●	●
B2	Clevis bracket		●	●

Precautions for model No. selection

*1 : The “CB” mounting is not available when the port direction is “0” (axial direction).
*2 : Refer to page 16 for the min. stroke with switch.
*3 : Magnet is not built into the type without switch.
*4 : “I” and “Y” cannot be selected together.
*5 : Copper and PTFE free as standard.
*6 : Switches are shipped with the product.

[Example of model No.]
SCPS3-L-00-10-30-O-T2H-R-I
Model: Pencil shaped cylinder

Ⓐ Model No.	: Single acting/push
Ⓑ Mounting	: Basic
Ⓒ Bore size	: ø10 mm
Ⓓ Stroke	: 30 mm
Ⓔ Head side port direction	: Axial direction
Ⓕ Switch model No.	: Proximity switch T2H, lead wire 1 m
Ⓖ Switch quantity	: 1 on rod side
Ⓗ Accessory	: Rod eye

Internal structure and parts list

● Single acting push
SCPS3
SCPS3-L (with switch)

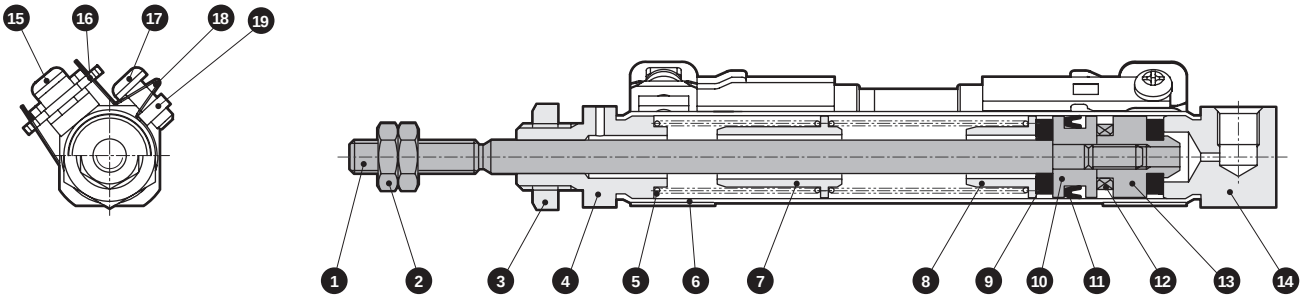

Cannot be disassembled

● This product cannot be disassembled.

No.	Part name	Material	Remarks	No.	Part name	Material	Remarks
1	Piston rod	Stainless steel		11	Piston packing	Nitrile rubber	
2	Rod nut	Steel	Nickeling	12	Magnet	-	With switch only
3	Hexagon nut	Steel	Nickeling	13	Spacer	Aluminum alloy	
4	Rod cover	Aluminum alloy	Hard alumite	14	Head cover	Aluminum alloy	Hard alumite
5	Coil spring	Piano wire	Zinc chromate	15	Phillips pan head machine screw	Stainless steel	With switch only
6	Cylinder tube	Stainless steel		16	Fixing bracket	Stainless steel	With switch only
7	Spring holder (A)	Aluminum alloy		17	Phillips pan head machine screw	Stainless steel	With switch only
8	Spring holder (B)	Aluminum alloy		18	Band	Stainless steel	With switch only
9	Cushion rubber	Urethane rubber		19	Fixing nut	Stainless steel	With switch only
10	Piston	Aluminum alloy					

● Single acting pull
SCPH3
SCPH3-L (with switch)

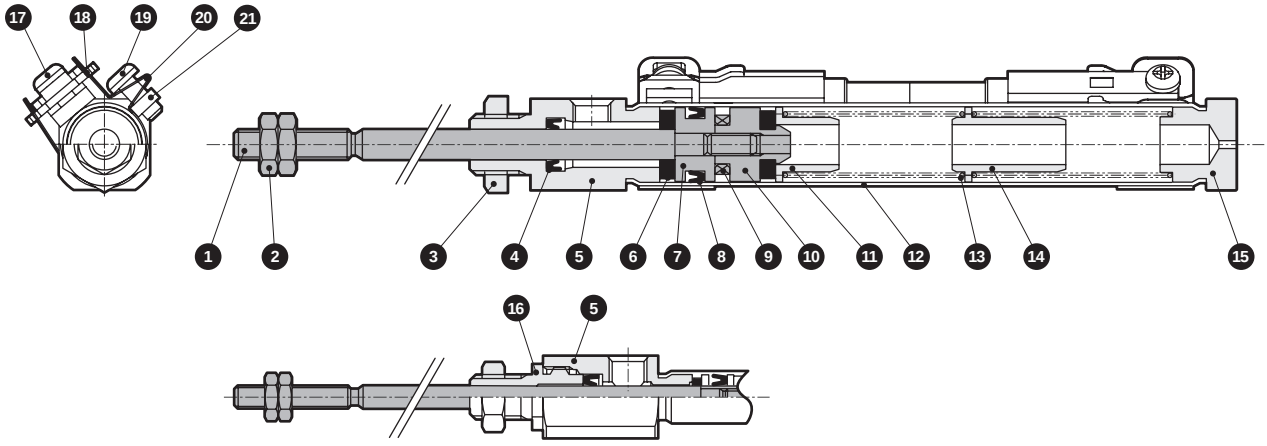

For ø6

Cannot be disassembled

● This product cannot be disassembled.

No.	Part name	Material	Remarks	No.	Part name	Material	Remarks
1	Piston rod	Stainless steel		12	Cylinder tube	Stainless steel	
2	Rod nut	Steel	Nickeling	13	Coil spring	Piano wire	Zinc chromate
3	Hexagon nut	Steel	Nickeling	14	Spring holder (B)	Aluminum alloy	
4	Rod packing	Nitrile rubber		15	Head cover	Aluminum alloy	Hard alumite
5	Rod cover	Aluminum alloy	Hard alumite	16	Rod metal	Aluminum alloy	Hard alumite
6	Cushion rubber	Urethane rubber		17	Phillips pan head machine screw	Stainless steel	With switch only
7	Piston	Aluminum alloy		18	Fixing bracket	Stainless steel	With switch only
8	Piston packing	Nitrile rubber		19	Phillips pan head machine screw	Stainless steel	With switch only
9	Magnet	-	With switch only	20	Band	Stainless steel	With switch only
10	Spacer	Aluminum alloy		21	Fixing nut	Stainless steel	With switch only
11	Spring holder (A)	Aluminum alloy					

Dimensions

● SCPS Basic (00) ø2.5

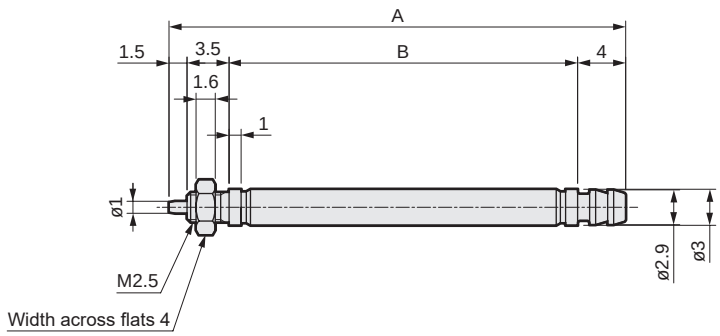

Code / Stroke (mm)	A	B
5	33	24
10	38	29

● SCPS Basic (00) ø4

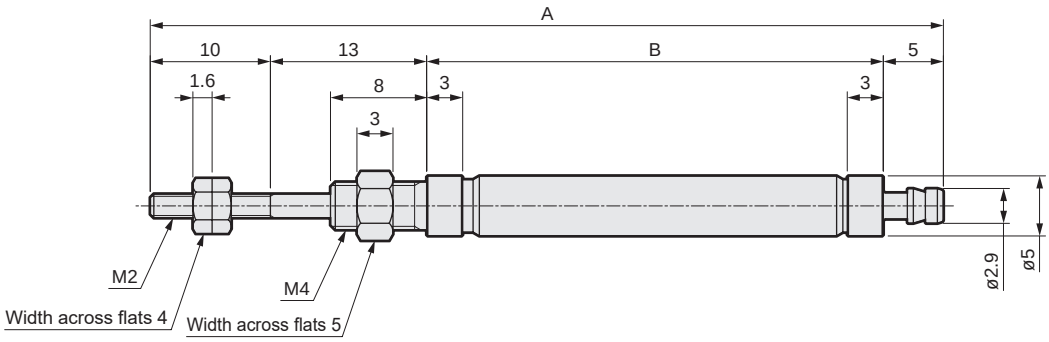

Code / Stroke (mm)	A	B
5	60.5	32.5
10	65.5	37.5
15	81.0	53.0
20	86.0	58.0

Dimensions

● SCPS3-(L) Basic (00)

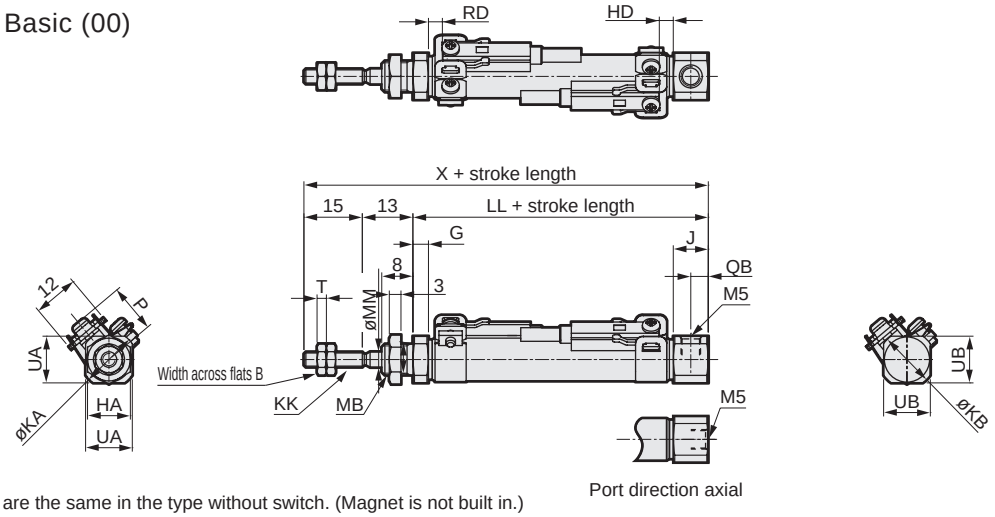

*1 : The dimensions are the same in the type without switch. (Magnet is not built in.)
*2 : As the thread depth of ø6/ø10 port is 3.8 mm, use a fitting with 3.8 mm or less thread length if necessary.
*3 : Dimensions shown in ( ) are for when the head side port direction is "O" (axial direction).
*4 : For the dimensions of the accessories, refer to page 15.

Code / Bore size (mm)	Basic (00) Basic dimensions																							
	B	G	HA	J	KA	KB	KK	LL								MB	MM	QB	T	UA	UB	X		
								≤ 15	16 ≤ 30	31 ≤ 45	46 ≤ 60	61 ≤ 75	76 ≤ 90	91 ≤ 105	106 ≤ 120							15 or less	Over 15 to 30	Over 30 to 45
ø6	5.5	3	8	8	10.5	13.5(10.5)	M3	43.5	48.5	63.5	68.5	83.5	88.5	103.5	-	M6	3	4	1.8	9	11(9)	71.5	76.5	91.5
ø10	7	4	11	9	14.5	14.5	M4	47	52	62	67	77	82	92	97	M8x1.0	4	4.5	2.4	12	12	75	80	90
ø16	8	4	14	9	21.5	21.5	M5	47	52	62	67	77	82	92	97	M10x1.0	5	4.5	3.2	18	18	75	80	90

Code / Bore size (mm)	With switch																								
	X					T0, T5, T2, T3										T2W, T3W									
						RD								HD		RD							HD	P	
	46 ≤ 60	61 ≤ 75	76 ≤ 90	91 ≤ 105	106 ≤ 120	≤ 15	16 ≤ 30	31 ≤ 45	46 ≤ 60	61 ≤ 75	76 ≤ 90	91 ≤ 105	106 ≤ 120			≤ 15	16 ≤ 30	31 ≤ 45	46 ≤ 60	61 ≤ 75	76 ≤ 90	91 ≤ 105	106 ≤ 120			
ø6	96.5	111.5	116.5	131.5	-	12	17	32	37	52	57	72	-	2		14	19	34	39	54	59	74	-	3.5	11.5	
ø10	95	105	110	120	125	13.5	18.5	28.5	33.5	43.5	48.5	58.5	63.5	2.5		15	20	30	35	45	50	60	65	4	13.5	
ø16	95	105	110	120	125	11.5	16.5	26.5	31.5	41.5	46.5	56.5	61.5	3.5		13.5	18.5	28.5	33.5	43.5	48.5	58.5	63.5	5	17.0	

● Axial foot (single) (LS)

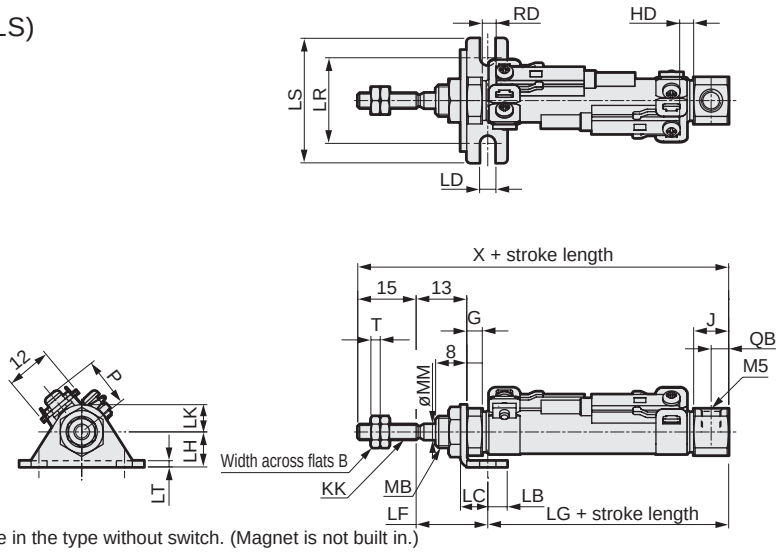

*1 : The dimensions are the same in the type without switch. (Magnet is not built in.)
*2 : As the thread depth of ø6/ø10 port is 3.8 mm, use a fitting with 3.8 mm or less thread length if necessary.
*3 : For the dimensions of the accessories, refer to page 15.

Code / Bore size (mm)	Axial foot (single) (LS) Basic dimensions															Mounting dimensions									
	B	G	KK	MB	MM	QB	T	X								LB	LC	LD	LF	LG					
								≤ 15	16 ≤ 30	31 ≤ 45	46 ≤ 60	61 ≤ 75	76 ≤ 90	91 ≤ 105	106 ≤ 120					≤ 15	16 ≤ 30	31 ≤ 45	46 ≤ 60	61 ≤ 75	76 ≤ 90
ø6	5.5	3	M3	M6	3	4	1.8	71.5	76.5	91.5	96.5	111.5	116.5	131.5	-	5	7	4.2	18.4	38.1	43.1	58.1	63.1	78.1	83.1
ø10	7	4	M4	M8x1.0	4	4.5	2.4	75	80	90	95	105	110	120	125	5	7	4.2	18.4	41.6	46.6	56.6	61.6	71.6	76.6
ø16	8	4	M5	M10x1.0	5	4.5	3.2	75	80	90	95	105	110	120	125	6	9	5.2	19.7	40.3	45.3	55.3	60.3	70.3	75.3

Code / Bore size (mm)	With switch																									
	LG		LH	LK	LR	LS	LT	T0, T5, T2, T3									T2W, T3W									P
								RD								HD	RD								HD	
	Over 90 to 105	Over 105 to 120						≤ 15	16 ≤ 30	31 ≤ 45	46 ≤ 60	61 ≤ 75	76 ≤ 90	91 ≤ 105	106 ≤ 120		≤ 15	16 ≤ 30	31 ≤ 45	46 ≤ 60	61 ≤ 75	76 ≤ 90	91 ≤ 105	106 ≤ 120		
ø6	98.1	-	9	7	22	32	1.6	12	17	32	37	52	57	72	-	2	14	19	34	39	54	59	74	-	3.5	11.5
ø10	86.6	91.6	9	7	22	32	1.6	13.5	18.5	28.5	33.5	43.5	48.5	58.5	63.5	2.5	15	20	30	35	45	50	60	65	4	13.5
ø16	85.3	90.3	14	10	29	42	2.3	11.5	16.5	26.5	31.5	41.5	46.5	56.5	61.5	3.5	13.5	18.5	28.5	33.5	43.5	48.5	58.5	63.5	5	17.0

Dimensions

● Rod side flange (FA)

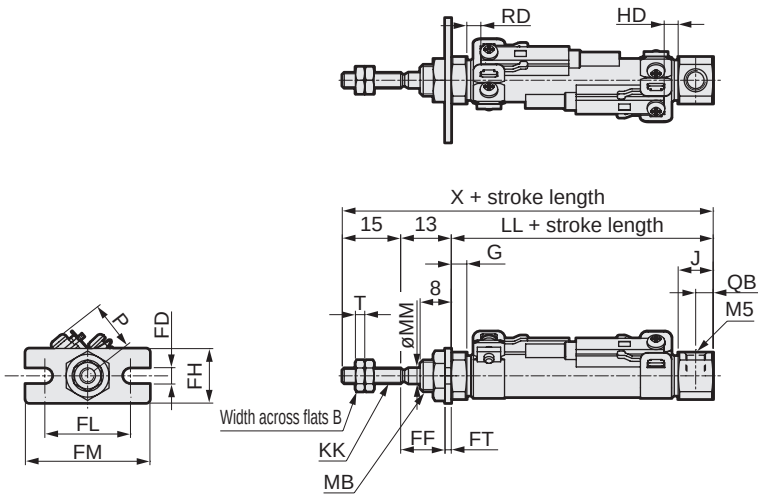

*1 : The dimensions are the same in the type without switch. (Magnet is not built in.)
*2 : As the thread depth of ø6/ø10 port is 3.8 mm, use a fitting with 3.8 mm or less thread length if necessary.
*3 : For the dimensions of the accessories, refer to page 15.

Code / Bore size (mm)	Rod side flange (FA) Basic dimensions																							
	B	G	J	KK	LL								MB	MM	QB	T	X							
					≤ 15	16 ≤ 30	31 ≤ 45	46 ≤ 60	61 ≤ 75	76 ≤ 90	91 ≤ 105	106 ≤ 120					≤ 15	16 ≤ 30	31 ≤ 45	46 ≤ 60	61 ≤ 75	76 ≤ 90	91 ≤ 105	106 ≤ 120
ø6	5.5	3	8	M3	43.5	48.5	63.5	68.5	83.5	88.5	103.5	-	M6	3	4	1.8	71.5	76.5	91.5	96.5	111.5	116.5	131.5	-
ø10	7	4	9	M4	47	52	62	67	77	82	92	97	M8x1.0	4	4.5	2.4	75	80	90	95	105	110	120	125
ø16	8	4	9	M5	47	52	62	67	77	82	92	97	M10x1.0	5	4.5	3.2	75	80	90	95	105	110	120	125

Code / Bore size (mm)	Mounting dimensions						With switch																		
	FD	FF	FH	FL	FM	FT	T0, T5, T2, T3									T2W, T3W									P
							RD								HD	RD								HD	
							≤ 15	16 ≤ 30	31 ≤ 45	46 ≤ 60	61 ≤ 75	76 ≤ 90	91 ≤ 105	106 ≤ 120		≤ 15	16 ≤ 30	31 ≤ 45	46 ≤ 60	61 ≤ 75	76 ≤ 90	91 ≤ 105	106 ≤ 120		
ø6	4.2	11.4	14	22	32	1.6	12	17	32	37	52	57	72	-	2	14	19	34	39	54	59	74	-	3.5	11.5
ø10	4.2	11.4	14	22	32	1.6	13.5	18.5	28.5	33.5	43.5	48.5	58.5	63.5	2.5	15	20	30	35	45	50	60	65	4	13.5
ø16	5.2	10.7	20	29	42	2.3	11.5	16.5	26.5	31.5	41.5	46.5	56.5	61.5	3.5	13.5	18.5	28.5	33.5	43.5	48.5	58.5	63.5	5	17.0

● Clevis bracket (CB)

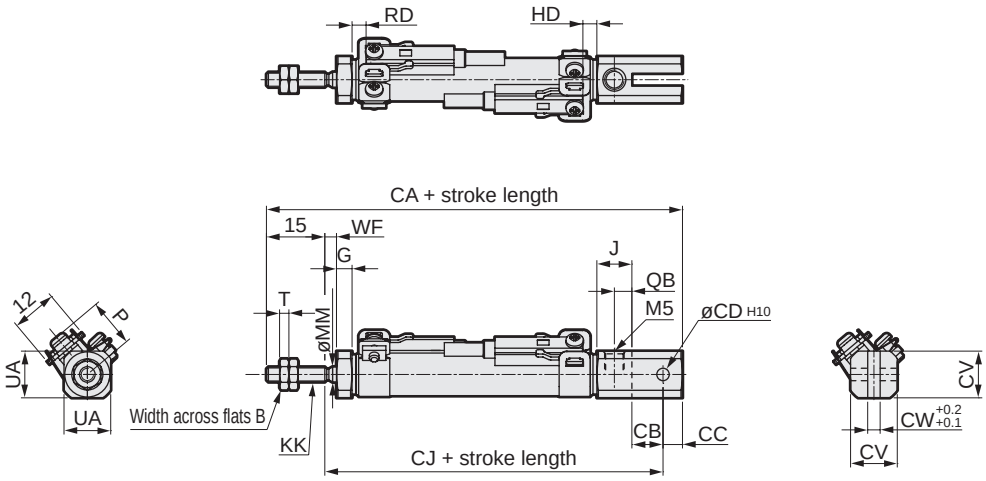

*1 : The dimensions are the same in the type without switch. (Magnet is not built in.)
*2 : A pin and retaining bracket are included.
*3 : For the dimensions of the accessories, refer to page 15.

Code / Bore size (mm)	Clevis bracket (CB) Basic dimensions								Mounting dimensions																			
	B	G	J	KK	MM	QB	T	UA	CA								CB	CC	CD	CJ								CV
									≤ 15	16 ≤ 30	31 ≤ 45	46 ≤ 60	61 ≤ 75	76 ≤ 90	91 ≤ 105	106 ≤ 120				≤ 15	16 ≤ 30	31 ≤ 45	46 ≤ 60	61 ≤ 75	76 ≤ 90	91 ≤ 105	106 ≤ 120	
ø10	7	4	9	M4	4	4.5	2.4	12	80	92	104	116	128	140	152	164	8	5	3.2	60	72	84	96	108	120	132	144	12
ø16	8	4	9	M5	5	4.5	3.2	18	87	99	111	123	135	147	159	171	10	10	5	62	74	86	98	110	122	134	146	18

Code / Bore size (mm)										With switch																		
	CW	WF								T0, T5, T2, T3									T2W, T3W									P
										RD								HD	RD								HD	
		≤ 15	16 ≤ 30	31 ≤ 45	46 ≤ 60	61 ≤ 75	76 ≤ 90	91 ≤ 105	106 ≤ 120	≤ 15	16 ≤ 30	31 ≤ 45	46 ≤ 60	61 ≤ 75	76 ≤ 90	91 ≤ 105	106 ≤ 120		≤ 15	16 ≤ 30	31 ≤ 45	46 ≤ 60	61 ≤ 75	76 ≤ 90	91 ≤ 105	106 ≤ 120		
ø10	3.2	5	12	14	21	23	30	32	39	13.5	18.5	28.5	33.5	43.5	48.5	58.5	63.5	2.5	15	20	30	35	45	50	60	65	4	13.5
ø16	6.5	5	12	14	21	23	30	32	39	11.5	16.5	26.5	31.5	41.5	46.5	56.5	61.5	3.5	13.5	18.5	28.5	33.5	43.5	48.5	58.5	63.5	5	17.0

Dimensions

● SCPH3-(L) Basic (00)

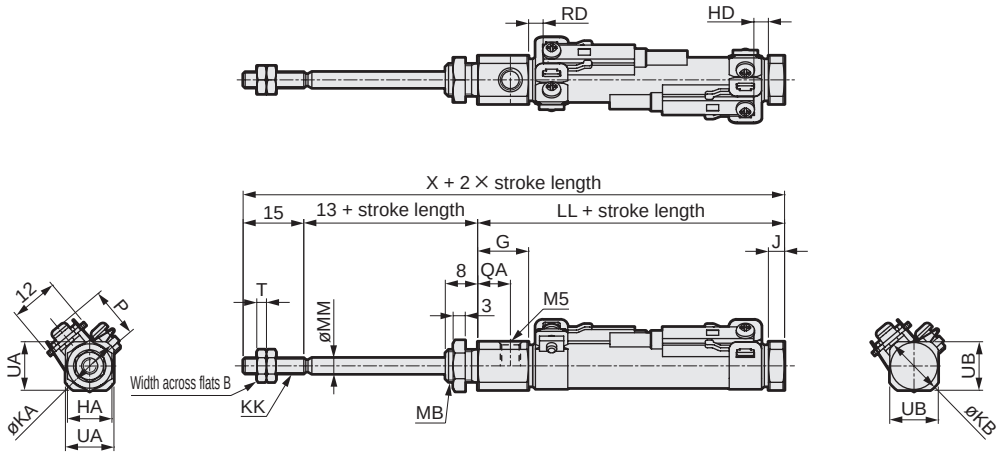

*1 : The dimensions are the same in the type without switch. (Magnet is not built in.)
*2 : As the thread depth of ø6/ø10 port is 3.8 mm, use a fitting with 3.8 mm or less thread length if necessary.
*3 : For the dimensions of the accessories, refer to page 15.

Code	Basic (00) Basic dimensions																							
Bore size (mm)	B	G	HA	J	KA	KB	KK	LL								MB	MM	QA	T	UA	UB	X		
								≤ 15	16 ≤ 30	31 ≤ 45	46 ≤ 60	61 ≤ 75	76 ≤ 90	91 ≤ 105	106 ≤ 120							≤ 15	16 ≤ 30	31 ≤ 45
ø6	5.5	17	8	3	13.5	10.5	M3	52.5	57.5	72.5	77.5	92.5	97.5	112.5	-	M6	3	13	1.8	11	9	80.5	85.5	100.5
ø10	7	12.5	11	4	14.5	14.5	M4	51	56	66	71	81	86	96	101	M8x1.0	4	8	2.4	12	12	79	84	94
ø16	8	13	14	4	21.5	21.5	M5	51	56	66	71	81	86	96	101	M10x1.0	5	8.5	3.2	18	18	79	84	94

Code	With switch																								
Bore size (mm)	X					T0, T5, T2, T3										T2W, T3W									P
						RD	HD									RD	HD								
	46 ≤ 60	61 ≤ 75	76 ≤ 90	91 ≤ 105	106 ≤ 120		≤ 15	16 ≤ 30	31 ≤ 45	46 ≤ 60	61 ≤ 75	76 ≤ 90	91 ≤ 105	106 ≤ 120			≤ 15	16 ≤ 30	31 ≤ 45	46 ≤ 60	61 ≤ 75	76 ≤ 90	91 ≤ 105	106 ≤ 120		
ø6	105.5	120.5	125.5	140.5	-	2	12	17	32	37	52	57	72	-	4	13.5	18.5	33.5	38.5	53.5	58.5	73.5	-	11.5	
ø10	99	109	114	124	129	3.5	12	17	27	32	42	47	57	62	5.5	14	19	29	34	44	49	59	64	13.5	
ø16	99	109	114	124	129	2	13.5	18.5	28.5	33.5	43.5	48.5	58.5	63.5	3.5	15	20	30	35	45	50	60	65	17.0	

● Axial foot (one side) (LS)

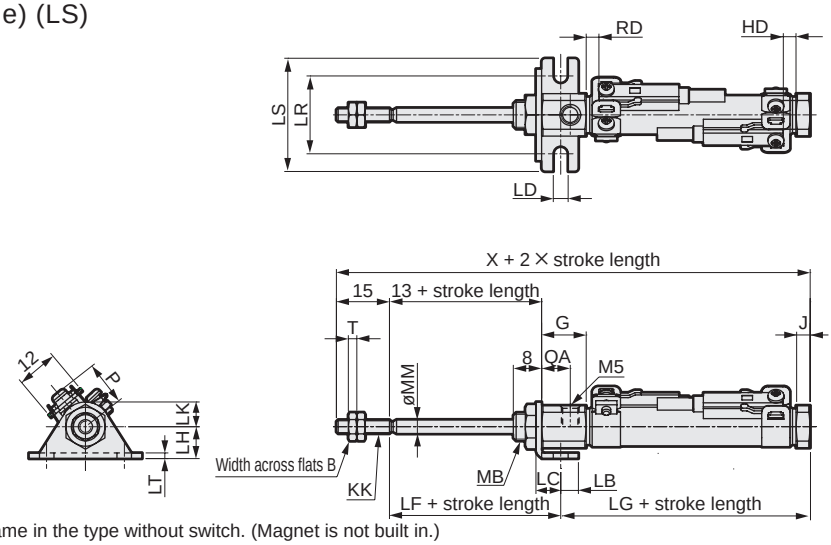

*1 : The dimensions are the same in the type without switch. (Magnet is not built in.)
*2 : As the thread depth of ø6/ø10 port is 3.8 mm, use a fitting with 3.8 mm or less thread length if necessary.
*3 : For the dimensions of the accessories, refer to page 15.

Code	Axial foot (single) (LS) Basic dimensions																Mounting dimensions									
Bore size (mm)	B	G	J	KK	MB	MM	QA	T	X								LB	LC	LD	LF	LG					
									≤ 15	16 ≤ 30	31 ≤ 45	46 ≤ 60	61 ≤ 75	76 ≤ 90	91 ≤ 105	106 ≤ 120					≤ 15	16 ≤ 30	31 ≤ 45	46 ≤ 60	61 ≤ 75	76 ≤ 90
ø6	5.5	17	3	M3	M6	3	13	1.8	80.5	85.5	100.5	105.5	120.5	125.5	140.5	-	5	7	4.2	18.4	47.1	52.1	67.1	72.1	87.1	92.1
ø10	7	12.5	4	M4	M8x1.0	4	8	2.4	79	84	94	99	109	114	124	129	5	7	4.2	18.4	45.6	50.6	60.6	65.6	75.6	80.6
ø16	8	13	4	M5	M10x1.0	5	8.5	3.2	79	84	94	99	109	114	124	129	6	9	5.2	19.7	44.3	49.3	59.3	64.3	74.3	79.3

Code	With switch																										
Bore size (mm)	LG		LH	LK	LR	LS	LT	T0, T5, T2, T3									T2W, T3W									P
								RD	HD								RD	HD								
	91 ≤ 105	106 ≤ 120							≤ 15	16 ≤ 30	31 ≤ 45	46 ≤ 60	61 ≤ 75	76 ≤ 90	91 ≤ 105	106 ≤ 120		≤ 15	16 ≤ 30	31 ≤ 45	46 ≤ 60	61 ≤ 75	76 ≤ 90	91 ≤ 105	106 ≤ 120		
ø6	107.1	-	9	7	22	32	1.6	2	12	17	32	37	52	57	72	-	4	13.5	18.5	33.5	38.5	53.5	58.5	73.5	-	11.5	
ø10	90.6	95.6	9	7	22	32	1.6	3.5	12	17	27	32	42	47	57	62	5.5	14	19	29	34	44	49	59	64	13.5	
ø16	89.3	94.3	14	10	29	42	2.3	2	13.5	18.5	28.5	33.5	43.5	48.5	58.5	63.5	3.5	15	20	30	35	45	50	60	65	17.0	

Dimensions

● Rod side flange (FA)

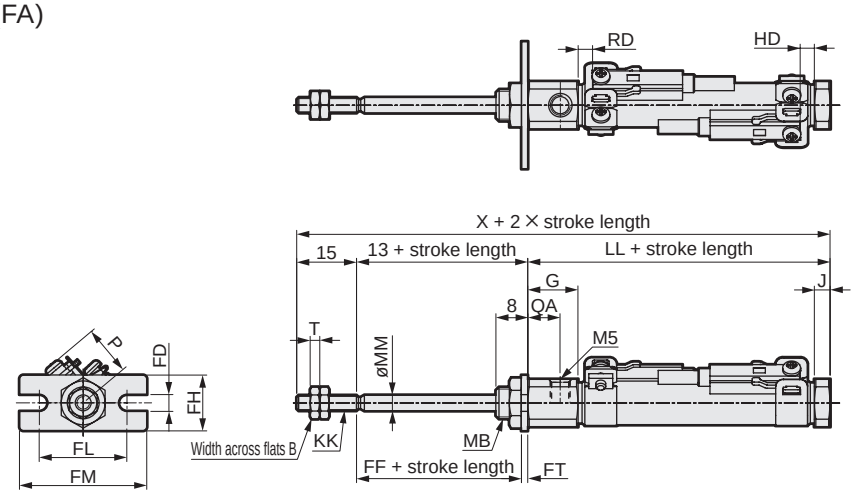

*1 : The dimensions are the same in the type without switch. (Magnet is not built in.)
*2 : As the thread depth of ø6/ø10 port is 3.8 mm, use a fitting with 3.8 mm or less thread length if necessary.
*3 : For the dimensions of the accessories, refer to page 15.

Code / Bore size (mm)	Rod side flange basic dimensions																								
	B	G	J	KK	LL								MB	MM	QA	T	X								
					≤ 15	16 ≤ 30	31 ≤ 45	46 ≤ 60	61 ≤ 75	76 ≤ 90	91 ≤ 105	106 ≤ 120					≤ 15	16 ≤ 30	31 ≤ 45	46 ≤ 60	61 ≤ 75	76 ≤ 90	91 ≤ 105	106 ≤ 120
ø6	5.5	17	3	M3	52.5	57.5	72.5	77.5	92.5	97.5	112.5	-	M6	3	13	1.8	80.5	85.5	100.5	105.5	120.5	125.5	140.5	-
ø10	7	12.5	4	M4	51	56	66	71	81	86	96	101	M8x1.0	4	8	2.4	79	84	94	99	109	114	124	129
ø16	8	13	4	M5	51	56	66	71	81	86	96	101	M10x1.0	5	8.5	3.2	79	84	94	99	109	114	124	129

Code / Bore size (mm)	Mounting dimensions						With switch																			
	FD	FF	FH	FL	FM	FT	T0, T5, T2, T3									T2W, T3W										P
							RD	HD								RD	HD									
								≤ 15	16 ≤ 30	31 ≤ 45	46 ≤ 60	61 ≤ 75	76 ≤ 90	91 ≤ 105	106 ≤ 120		≤ 15	16 ≤ 30	31 ≤ 45	46 ≤ 60	61 ≤ 75	76 ≤ 90	91 ≤ 105	106 ≤ 120	
ø6	4.2	11.4	14	22	32	1.6	2	12	17	32	37	52	57	72	-	4	13.5	18.5	33.5	38.5	53.5	58.5	73.5	-	11.5	
ø10	4.2	11.4	14	22	32	1.6	3.5	12	17	27	32	42	47	57	62	5.5	14	19	29	34	44	49	59	64	13.5	
ø16	5.2	10.7	20	29	42	2.3	2	13.5	18.5	28.5	33.5	43.5	48.5	58.5	63.5	3.5	15	20	30	35	45	50	60	65	17.0	

● Clevis bracket (CB)

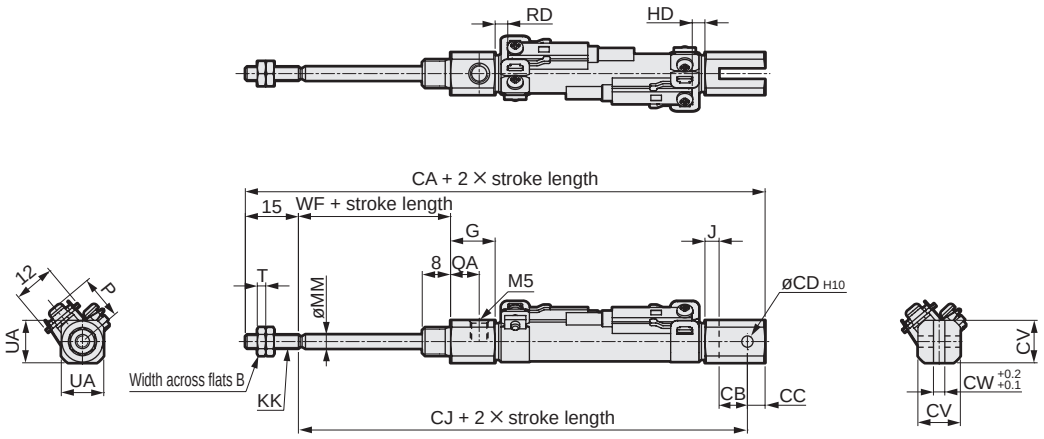

*1 : The dimensions are the same in the type without switch. (Magnet is not built in.)
*2 : As the thread depth of ø10 port is 3.8 mm, use a fitting with 3.8 mm or less thread length if necessary.
*3 : A pin and retaining bracket are included.
*4 : For the dimensions of the accessories, refer to page 15.

Code / Bore size (mm)	Clevis bracket (CB) Basic								Mounting dimensions																		
	B	G	J	KK	MM	QA	T	UA	CA								CB	CC	CD	CJ									CV
									≤ 15	16 ≤ 30	31 ≤ 45	46 ≤ 60	61 ≤ 75	76 ≤ 90	91 ≤ 105	106 ≤ 120				≤ 15	16 ≤ 30	31 ≤ 45	46 ≤ 60	61 ≤ 75	76 ≤ 90	91 ≤ 105	106 ≤ 120		
ø10	7	12.5	4	M4	4	8	2.4	12	94	106	118	130	142	154	166	178	8	5	3.2	74	86	98	110	122	134	146	158	12
ø16	8	13	4	M5	5	8.5	3.2	18	101	113	125	137	149	161	173	185	10	10	5	76	88	100	112	124	136	148	160	18

Code / Bore size (mm)		With switch																											
	CW	WF								T0, T5, T2, T3									T2W, T3W										P
										RD	HD								RD	HD									
		≤ 15	16 ≤ 30	31 ≤ 45	46 ≤ 60	61 ≤ 75	76 ≤ 90	91 ≤ 105	106 ≤ 120		≤ 15	16 ≤ 30	31 ≤ 45	46 ≤ 60	61 ≤ 75	76 ≤ 90	91 ≤ 105	106 ≤ 120		≤ 15	16 ≤ 30	31 ≤ 45	46 ≤ 60	61 ≤ 75	76 ≤ 90	91 ≤ 105	106 ≤ 120	
ø10	3.2	15	22	24	31	33	40	42	49	3.5	12	17	27	32	42	47	57	62	5.5	14	19	29	34	44	49	59	64	13.5	
ø16	6.5	15	22	24	31	33	40	42	49	2	13.5	18.5	28.5	33.5	43.5	48.5	58.5	63.5	3.5	15	20	30	35	45	50	60	65	17.0	

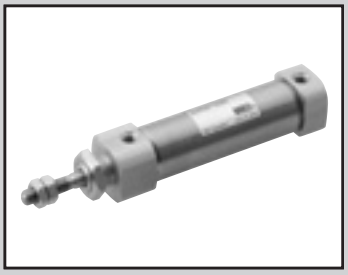

Pencil shaped cylinder Double acting/heat resistance

SCPD3-T Series

● Bore size: ø6/ø10/ø16

JIS symbol

RoHS CAD

Specifications

Item		SCPD3-T		
Bore size	mm	ø6	ø10	ø16
Actuation		Double acting/heat resistant		
Working fluid		Compressed air		
Max. working pressure	MPa	1.0 (≈150 psi, 10 bar)		
Min. working pressure	MPa	0.15 (≈22 psi, 1.5 bar)	0.1 (≈15 psi, 1 bar)	
Proof pressure	MPa	1.6 (≈230 psi, 16 bar)		
Ambient temperature	°C	5 (41°F) to 120 (248°F)		
Port size		M5		
Stroke tolerance	mm	+1.0 0		
Working piston speed	mm/s	50 to 750		
Cushion		Rubber cushion		
Lubrication		Not available		
Allowable absorbed energy	J	0.012	0.041	0.162

Stroke

Bore size (mm)		Standard stroke (mm)	Max. stroke (mm)	Min. stroke (mm)
SCPD3-T	ø6	15/30/45/60	100	5
	ø10		200	
	ø16		260	

*1: The custom stroke is available in 1 mm increments.

Cylinder weight

(Unit: g)

Type	Item / Bore size (mm)	Mounting bracket weight: Foot LS	Mounting bracket weight: Flange FA	Mounting bracket weight: Clevis CB	Product weight when at 0 mm stroke	Additional weight per 10 mm stroke
SCPD3-T	ø6	6	4	-	13	1
	ø10	6	4	4	21	2
	ø16	15	12	10	42	3

(Example) Product weight of SCPD3-T-LS-10-30

- ● Mounting bracket weight (foot) ..... 6 g
- ● Product weight for 0 mm stroke ..... 21 g
- ● Additional weight for 30 mm stroke ..... 2x30/10=6 g
- ● Product weight ..... 6+21+6=33 g

Theoretical thrust table

(Unit: N)

Bore size (mm)	Operating direction	Working pressure MPa: 0.1	0.15	0.2	0.3	0.4	0.5	0.6	0.7	0.8	0.9	1.0
ø6	Push	-	4.24	5.65	8.48	11.3	14.1	17.0	19.8	22.6	25.4	28.3
	Pull	-	3.18	4.24	6.36	8.48	10.6	12.7	14.8	17.0	19.1	21.2
ø10	Push	7.85	11.8	15.7	23.6	31.4	39.3	47.1	55.0	62.8	70.7	78.5
	Pull	6.60	9.90	13.2	19.8	26.4	33.0	39.6	46.2	52.8	59.4	66.0
ø16	Push	20.1	30.2	40.2	60.3	80.4	1.01×10^2	1.21×10^2	1.41×10^2	1.61×10^2	1.81×10^2	2.01×10^2
	Pull	18.1	27.2	36.3	54.4	72.6	90.7	1.09×10^2	1.27×10^2	1.45×10^2	1.63×10^2	1.81×10^2

Dimensions

Same as those of double acting SCPD3 Series. Refer to pages 13 and 14.

How to order

SCPD3-T - 00 - 10 - 15 - O ——— Y

- Ⓐ Mounting *1
- Ⓑ Bore size
- Ⓒ Stroke
- Ⓓ Head side port direction *1
- Ⓔ Accessory *2

Code	Description			
Ⓐ Mounting				
Bore size (ø)		6	10	16
00	Basic	●	●	●
LS	Axial foot (one side) (rod side)	●	●	●
FA	Rod side flange	●	●	●
CB	Clevis bracket (pin and snap ring included)		●	●

Ⓑ Bore size (mm)	
6	ø6
10	ø10
16	ø16

Ⓒ Stroke (mm)			
Bore size	**Stroke**	**Available stroke**	**Custom stroke**
ø6	**5 to 100**	**100**	In 1 mm increments
ø10	**5 to 200**	**200**	
ø16	**5 to 260**	**260**	

Ⓓ Head side port direction	
Blank	Vertical
O	Axial direction

Ⓔ Accessory				
Bore size (ø)		6	10	16
I	Rod eye		●	●
Y	Rod clevis (pin and snap ring included)		●	●
B1	Eye bracket		●	●
B2	Clevis bracket		●	●

⚠ Precautions for model No. selection

*1: The "CB" mounting is not available when the port direction is "0" (axial direction).
*2: "I" and "Y" cannot be selected together.

[Example of model No.]
SCPD3-T-00-10-30-O-I
Model: Pencil shaped cylinder Heat resistance

Ⓐ Mounting	: Basic
Ⓑ Bore size	: ø10 mm
Ⓒ Stroke	: 30 mm
Ⓓ Head side port direction	: Axial direction
Ⓔ Accessory	: Rod eye

How to order mounting bracket

Bore size (mm) / Mounting bracket	ø6	ø10	ø16
Foot (LS)	P2-LS-6	P2-LS-10	P2-LS-16
Flange (FA)	P2-FA-6	P2-FA-10	P2-FA-16

Note: The foot (LS) mounting bracket is provided as 1 pc./set.

Internal structure and parts list

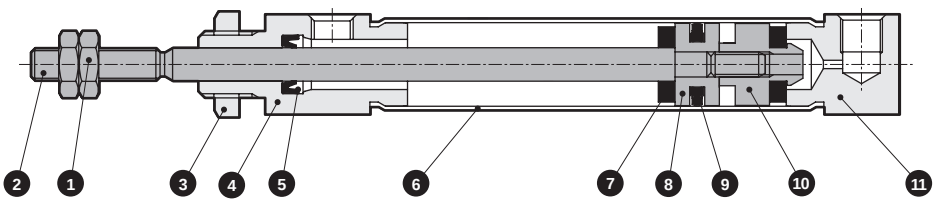

Cannot be disassembled

● This product is a caulked and cannot be disassembled.

No.	Part name	Material	Remarks	No.	Part name	Material	Remarks
1	Rod nut	Steel	Nickeling	7	Cushion rubber	Fluoro rubber	
2	Piston rod	Stainless steel		8	Piston	Aluminum alloy	
3	Hexagon nut	Steel	Nickeling	9	Piston packing	Fluoro rubber	
4	Rod cover	Aluminum alloy	Hard alumite	10	Spacer	Aluminum alloy	
5	Rod packing	Fluoro rubber		11	Head cover	Aluminum alloy	Hard alumite
6	Cylinder tube	Stainless steel					

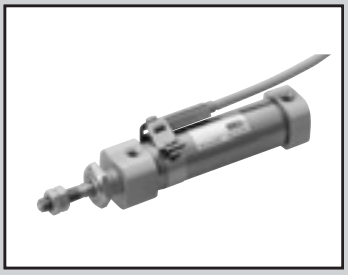

Pencil shaped cylinder Double acting/rubber-air cushioned

SCPD3-*C Series

● Bore size: ø6/ø10/ø16

JIS symbol

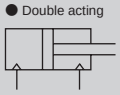

RoHS CAD

Specifications

Item		SCPD3-*C, SCPD3-L-*C		
Bore size	mm	ø6	ø10	ø16
Actuation		Double acting		
Working fluid		Compressed air		
Max. working pressure	MPa	1.0 (≈150 psi, 10 bar)		
Min. working pressure	MPa	0.3 (≈44 psi, 3 bar)		0.2 (≈29 psi, 2 bar)
Proof pressure	MPa	1.6 (≈230 psi, 16 bar)		
Ambient temperature	°C	-10 (14°F) to 60 (140°F) (no freezing)		
Port size		M5		
Stroke tolerance	mm	+1.0 0		
Working piston speed	mm/s	50 to 750 (Operate within the allowable absorbed energy.)		
Cushion		Rubber-air cushion		
Lubrication		Not required (use turbine oil class 1 ISO VG32 if necessary for lubrication)		
Allowable absorbed energy	J	0.012	0.041	0.162

Stroke

Bore size (mm)	Standard stroke (mm)	Max. stroke (mm)	Min. stroke (mm)
ø6	15/30/45/60	100	5
ø10		200	
ø16		260	

*1: The custom stroke is available in 1 mm increments.

Min. stroke with switch

	1		2	
Sketch	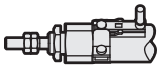 Rod side installation	Head side installation	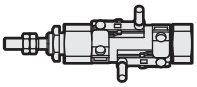 Different surface mounting	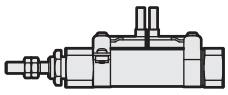 Same surface mounting
Min. stroke	5 mm		10 mm	28 mm

	3	
Sketch	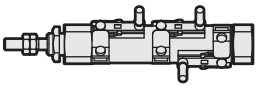 Different surface mounting	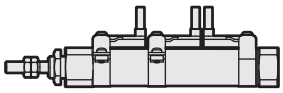 Same surface mounting
Min. stroke	38 mm	54 mm

Data of the reduction of collision noise level (an example case)

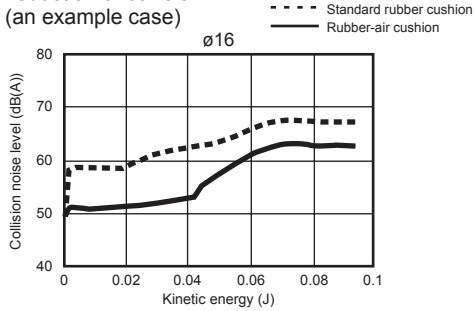

Data of the reduction of collision acceleration level (an example case)

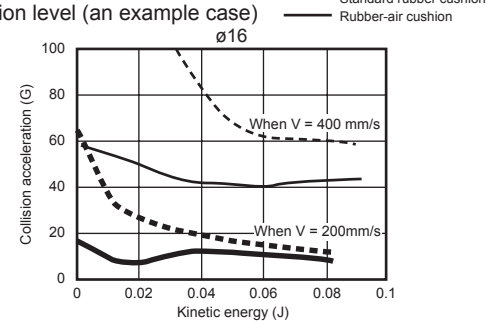

■ Rubber-air cushion mechanism

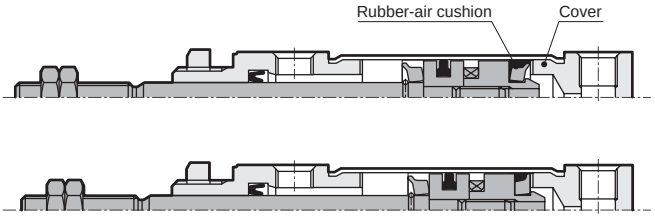

When pulled

An airtight space is created in the ■ area when the piston operates and the rubber-air cushion and cover make contact. Air in the airtight area is further compressed, absorbing energy as the piston operates. At the end of the stroke, energy generated by compression distortion of the air cushion is also added.

Switch specifications

Item	2-wire proximity		3-wire proximity	
	T2H/T2V	T2WH/T2WV	T3H/T3V	T3WH/T3WV
Applications	Dedicated for programmable controller		For programmable controller, relay	
Output method	-		NPN output	
Power supply voltage	-		10 to 28 VDC	
Load voltage	10 to 30 VDC	24 VDC ±10%	30 VDC or less	
Load current	5 to 20 mA (*3)		100 mA or less	50 mA or less
Indicator	LED (Lit when ON)	Red/green LED (Lit when ON)	LED (Lit when ON)	Red/green LED (Lit when ON)
Leakage current	1 mA or less		10 μA or less	
Weight g	1 m:18 3 m:49 5 m:80		1 m:18 3 m:49 5 m:80	

Item	2-wire reed			
	T0H/T0V		T5H/T5V	
Applications	For programmable controller, relay		For programmable controller, relay, IC circuit (without indicator lamp), serial connection	
Load voltage	12/24 VDC	110 VAC	5/12/24 VDC	110 VAC
Load current	5 to 50 mA	7 to 20 mA	50 mA or less	20 mA or less
Indicator	LED (Lit when ON)		No indicator lamp	
Leakage current	0 mA		0 mA	
Weight g	1 m:18 3 m:49 5 m:80		1 m:18 3 m:49 5 m:80	

*1: Refer to Ending Page 1 for detailed switch specifications and dimensions.
*2: Switches other than the above models, such as switches with connectors, are also available. Refer to Ending Page 1.
*3: The max. load current is 20 mA at 25°C. The current is lower than 20 mA if the operating ambient temperature around the switch is higher than 25˚C. (5 to 10 mA at 60°C)

Cylinder weight

(Unit: g)

Type	Item / Bore size (mm)	Mounting bracket weight: Foot LS	Mounting bracket weight: Flange FA	Mounting bracket weight: Clevis CB	Product weight when at 0 mm stroke	Additional weight per 10mm stroke	Switch weight (per switch)	Mounting bracket weight
SCPD3-*C	ø6	6	4	-	13	1	Refer to the weight in the switch specifications.	2
	ø10	6	4	4	21	2		
	ø16	15	12	10	42	3		

(Example) Product weight of SCPD3-L-LS-10C-30-T0H-D

- Mounting bracket weight (foot) ..... 6 g
- Product weight for 0 mm stroke ..... 21 g
- Additional weight for 30 mm stroke ..... 2x30/10=6 g
- Switch weight ..... 2x(18+2)=40 g
- Product weight ..... 6+21+6+40=73 g

Theoretical thrust table

(Unit: N)

Bore size (mm)	Operating direction	Working pressure MPa 0.2	0.3	0.4	0.5	0.6	0.7	0.8	0.9	1.0
ø6	Push	-	8.48	11.3	14.1	17.0	19.8	22.6	25.4	28.3
	Pull	-	6.36	8.48	10.6	12.7	14.8	17.0	19.1	21.2
ø10	Push	-	23.6	31.4	39.3	47.1	55.0	62.8	70.7	78.5
	Pull	-	19.8	26.4	33.0	39.6	46.2	52.8	59.4	66.0
ø16	Push	40.2	60.3	80.4	1.01×10^2	1.21×10^2	1.41×10^2	1.61×10^2	1.81×10^2	2.01×10^2
	Pull	36.3	54.4	72.6	90.7	1.09×10^2	1.27×10^2	1.45×10^2	1.63×10^2	1.81×10^2

How to order

No switch (without magnet for switch)

SCPD3 – 00 – 10 C – 15 – O ——— I

With switch (built-in magnet for switch)

SCPD3-L – 00 – 10 C – 15 – O – T2H – R – I

Ⓐ Mounting *1

Ⓑ Bore size

Rubber-air cushioned

Ⓒ Stroke

Ⓓ Head side port direction *1

Ⓔ Switch model No. *3, *6
* indicates the lead wire length.

Ⓕ Switch quantity

Ⓖ Options/accessories *4

Code	Description			
Ⓐ Mounting				
Bore size (ø)		6	10	16
00	Basic	●	●	●
LS	Axial foot (one side) (rod side)	●	●	●
FA	Rod side flange	●	●	●
CB	Clevis bracket		●	●

Ⓑ Bore size (mm)	
6	ø6
10	ø10
16	ø16

Ⓒ Stroke (mm)		
Bore size	**Stroke *2**	**Custom stroke**
ø6	**5 to 100**	In 1 mm increments
ø10	**5 to 200**	
ø16	**5 to 260**	

Ⓓ Head side port direction	
Blank	Vertical
O	Axial direction

Ⓔ Switch model No.

Axial lead wire	Radial lead wire	Contact	Voltage AC	Voltage DC	Indicator	Lead wire
T0H*	**T0V***	Reed	●	●	1-color LED	2-wire
T5H*	**T5V***		●	●	No indicator lamp	
T2H*	**T2V***	Proximity		●	1-color LED	2-wire
T3H*	**T3V***			●		3-wire
T2WH*	**T2WV***			●	2-color LED	2-wire
T3WH*	**T3WV***			●		3-wire

*** Lead wire length**	
Blank	1 m (standard)
3	3 m (option)
5	5 m (option)

Ⓕ Switch quantity	
R	1 on rod side
H	1 on head side
D	2
T	3

Ⓖ Options/accessories				
Bore size (ø)		6	10	16
I	Rod eye		●	●
Y	Rod clevis (pin and snap ring included)		●	●
B1	Eye bracket		●	●
B2	Clevis bracket		●	●

⚠ Precautions for model No. selection

*1 : The "CB" mounting is not available when the port direction is "0" (axial direction).
*2 : Refer to page 28 for the min. stroke with switch.
*3 : Magnet is not built into the type without switch.
*4 : "I" and "Y" cannot be selected together.
*5 : Copper and PTFE free as standard.
*6 : Switches are shipped with the product.

[Example of model No.]
SCPD3-L-00-10C-15-O-T2H-R-I
Model: Pencil shaped cylinder Double acting/rubber-air cushioned

Ⓐ Mounting	: Basic
Ⓑ Bore size	: ø10 mm
Ⓒ Stroke	: 15 mm
Ⓓ Head side port direction	: Axial direction
Ⓔ Switch model No.	: Proximity switch T2H, lead wire 1 m
Ⓕ Switch quantity	: 1 on rod side
Ⓖ Accessory	: Rod eye

How to order switch

● Switch body + mounting bracket set

SCPD3 - T0H - 6

Bore size
(Item Ⓑ on page 30)

Switch model No.
(Item Ⓔ on page 30)

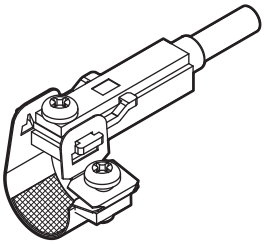

● Switch body (with fixing bracket)

SCPD3 - T0H

Switch model No.
(Item Ⓔ on page 30)

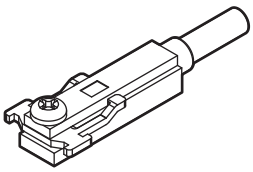

Note) The fixing bracket and cross-recessed pan head machine screw are different from those for the T standard switch.

● Mounting bracket set + fixing bracket

SCPD3 - TS - 6

Bore size
(Item Ⓑ on page 30)

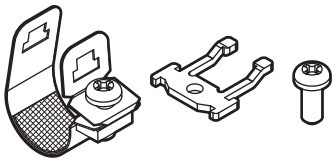

When 20 pcs or more are ordered, they will be packed together.

● Mounting bracket set

SCPD3 - T - 6

Bore size
(Item Ⓑ on page 30)

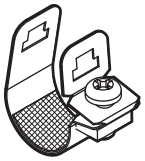

When 20 pcs or more are ordered, they will be packed together.

How to order mounting bracket

Bore size (mm) / Mounting bracket	ø6	ø10	ø16
Foot (LS)	P2-LS-6	P2-LS-10	P2-LS-16
Flange (FA)	P2-FA-6	P2-FA-10	P2-FA-16

Note: The foot (LS) mounting bracket is provided as 1 pc./set.

Internal structure and parts list

● Rubber-air cushioned
SCPD3-*C
SCPD3-L-*C (with switch)

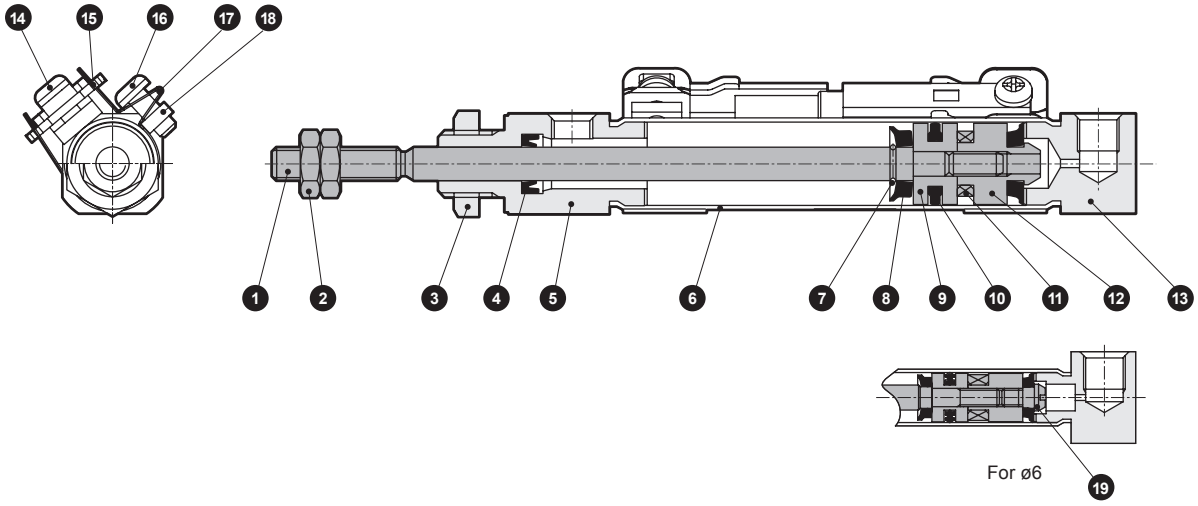

Cannot be disassembled

● This product cannot be disassembled.

No.	Part name	Material	Remarks	No.	Part name	Material	Remarks
1	Piston rod	Stainless steel		11	Magnet	-	With switch only
2	Rod nut	Steel	Nickeling	12	Spacer	Aluminum alloy	
3	Hexagon nut	Steel	Nickeling	13	Head cover	Aluminum alloy	Hard alumite
4	Rod packing	Nitrile rubber		14	Phillips pan head machine screw	Stainless steel	With switch only
5	Rod cover	Aluminum alloy	Hard alumite	15	Fixing bracket	Stainless steel	With switch only
6	Cylinder tube	Stainless steel		16	Phillips pan head machine screw	Stainless steel	With switch only
7	Retaining ring	Stainless steel		17	Band	Stainless steel	With switch only
8	Rubber-air cushion	Special rubber		18	Fixing nut	Stainless steel	With switch only
9	Piston	Aluminum alloy		19	Pin	Stainless steel	ø6 only
10	Piston packing	Nitrile rubber					

Dimensions

Same as those of SCPD3 Series (double acting/single rod). Refer to pages 13 and 14.

Technical data

[Comparison of collision noise level]

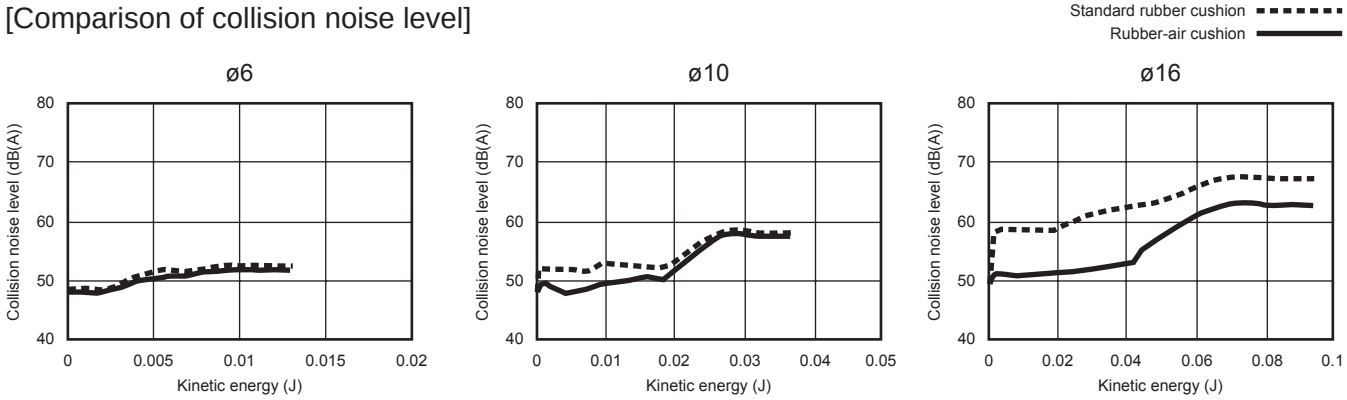

[Comparison of collision acceleration]

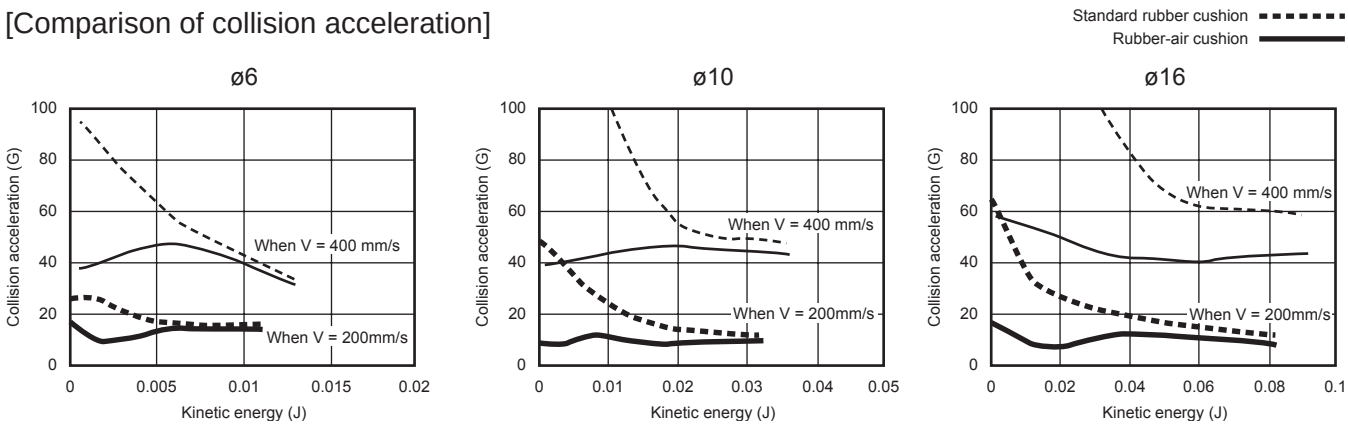

[Recommended energy range]

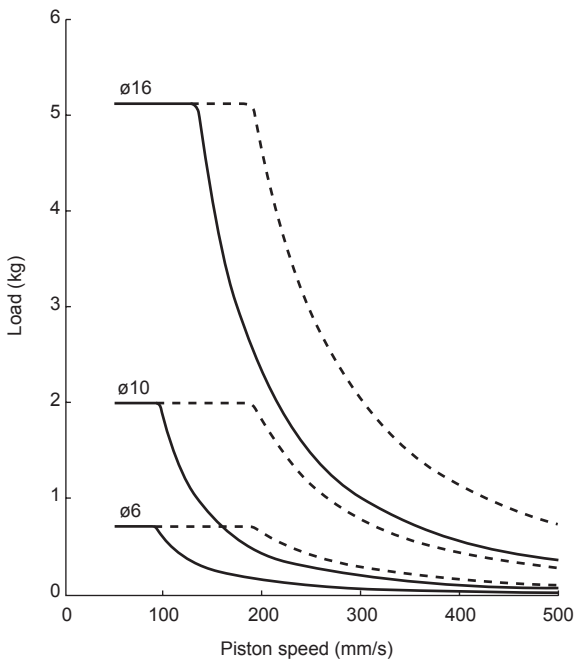

Usable in the range below and to the left of the curve.
Although it can also be used in the range marked with - - - in the figure, we recommend use within the range marked with a solid line to maximize the noise reduction effect and damping effect.

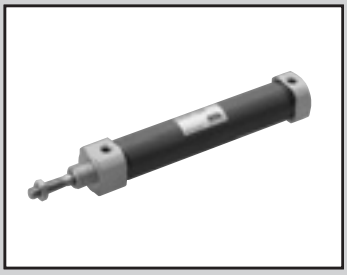

Pencil shaped cylinder Double acting/fine speed

SCPD3-F Series

● Bore size: ø6/ø10/ø16

JIS symbol

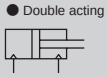

RoHS CAD

Specifications

Item		SCPD3-F/SCPD3-LF (with switch)		
Bore size	mm	ø6	ø10	ø16
Actuation		Double acting		
Working fluid		Compressed air		
Max. working pressure	MPa	1.0 (≈150 psi, 10 bar)		
Min. working pressure	MPa	0.15 (≈22 psi, 1.5 bar)	0.1 (≈15 psi, 1 bar)	
Proof pressure	MPa	1.6 (≈230 psi, 16 bar)		
Ambient temperature	°C	5 (41°F) to 60 (140°F)		
Port size		M5		
Stroke tolerance	mm	+1.0 0		
Working piston speed	mm/s	1 to 200		
Cushion		Rubber cushion		
Lubrication		Not available		
Allowable absorbed energy	J	0.012	0.041	0.162

Stroke

Bore size (mm)		Standard stroke (mm)	Max. stroke (mm)	Min. stroke (mm)
SCPD3-F SCPD3-LF	ø6	15/30/45/60	100	5
	ø10		200	
	ø16		260	

*1: The custom stroke is available in 1 mm increments.

Min. stroke with switch

	1		2	
Sketch	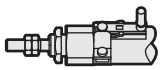 Rod side installation	Head side installation	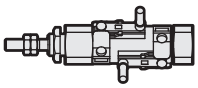 Different surface mounting	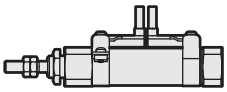 Same surface mounting
Min. stroke	5 mm		10 mm	28 mm

	3	
Sketch	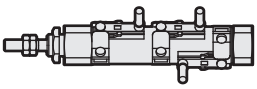 Different surface mounting	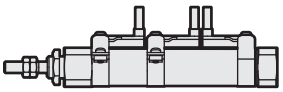 Same surface mounting
Min. stroke	38 mm	54 mm

Dimensions

Same as SCPD3 Series (double acting/single rod). Refer to pages 13 and 14.

Switch specifications

Item	2-wire proximity		3-wire proximity	
	T2H/T2V	T2WH/T2WV	T3H/T3V	T3WH/T3WV
Applications	Dedicated for programmable controller		For programmable controller, relay	
Output method	-		NPN output	
Power supply voltage	-		10 to 28 VDC	
Load voltage	10 to 30 VDC	24 VDC ±10%	30 VDC or less	
Load current	5 to 20 mA (*3)		100 mA or less	50 mA or less
Indicator	LED (Lit when ON)	Red/green LED (Lit when ON)	LED (Lit when ON)	Red/green LED (Lit when ON)
Leakage current	1 mA or less		10 μA or less	
Weight g	1 m:18 3 m:49 5 m:80		1 m:18 3 m:49 5 m:80	

Item	2-wire reed			
	T0H/T0V		T5H/T5V	
Applications	For programmable controller, relay		For programmable controller, relay, IC circuit (without indicator lamp), serial connection	
Load voltage	12/24 VDC	110 VAC	5/12/24 VDC	110 VAC
Load current	5 to 50 mA	7 to 20 mA	50 mA or less	20 mA or less
Indicator	LED (Lit when ON)		No indicator lamp	
Leakage current	0 mA		0 mA	
Weight g	1 m:18 3 m:49 5 m:80		1 m:18 3 m:49 5 m:80	

*1: Refer to Ending Page 1 for detailed switch specifications and dimensions.
*2: Switches other than the above models, such as switches with connectors, are also available. Refer to Ending Page 1.
*3: The max. load current is 20 mA at 25°C. The current is lower than 20 mA if the operating ambient temperature around the switch is higher than 25˚C. (5 to 10 mA at 60°C)

Cylinder weight

(Unit: g)

Type	Item / Bore size (mm)	Mounting bracket weight: Foot LS	Mounting bracket weight: Flange FA	Mounting bracket weight: Clevis CB	Product weight when at 0 mm stroke	Additional weight per 10 mm stroke	Switch weight (per switch)	Switch mounting bracket weight
SCPD3-F	ø6	6	4	-	13	1	Refer to the weight in the switch specifications.	2
	ø10	6	4	4	21	2		
	ø16	15	12	10	42	3		

(Example) Product weight of SCPD3-LF-LS-10-30-T0H-D
- Mounting bracket weight (foot) ..... 6 g
- Product weight for 0 mm stroke ..... 21 g
- Additional weight for 30 mm stroke ..... 2x30/10=6 g
- Switch weight ..... 2x(18+2)=40 g
- Product weight ..... 6+21+6+40=73 g

Theoretical thrust table

(Unit: N)

Bore size (mm)	Operating direction	Working pressure MPa 0.1	0.15	0.2	0.3	0.4	0.5	0.6	0.7	0.8	0.9	1.0
ø6	Push	-	4.24	5.65	8.48	11.3	14.1	17.0	19.8	22.6	25.4	28.3
	Pull	-	3.18	4.24	6.36	8.48	10.6	12.7	14.8	17.0	19.1	21.2
ø10	Push	7.85	11.8	15.7	23.6	31.4	39.3	47.1	55.0	62.8	70.7	78.5
	Pull	6.60	9.90	13.2	19.8	26.4	33.0	39.6	46.2	52.8	59.4	66.0
ø16	Push	20.1	30.2	40.2	60.3	80.4	$1.01x10^2$	$1.21x10^2$	$1.41x10^2$	$1.61x10^2$	$1.81x10^2$	$2.01x10^2$
	Pull	18.1	27.2	36.3	54.4	72.6	90.7	$1.09x10^2$	$1.27x10^2$	$1.45x10^2$	$1.63x10^2$	$1.81x10^2$

SCP*3
CMK2
CMA2
SCM
SCG
SCA2
SCS2
CKV2
CAV2/COVP/N2
SSD2
SSG
SSD
CAT
MDC2
MVC
SMG
MSD/MSDG
FC*
STK
SRL3
SRG3
SRM3
SRT3
MRL2
MRG2
SM-25
ShkAbs
FJ
FK
Spd Contr
Ending

How to order

No switch (without magnet for switch)

SCPD3-F - LS - 10 - 15 ——— I

With switch (built-in magnet for switch)

SCPD3-LF - LS - 10 - 15 - T2H - R - I

Model No.

Ⓐ Mounting

Ⓑ Bore size

Ⓒ Stroke

Ⓓ Switch model No. *2, *4
* indicates the lead wire length.

Ⓔ Switch quantity

Ⓕ Accessory *3

Code	Description			
Ⓐ Mounting				
Bore size (ø)		6	10	16
00	Basic	●	●	●
LS	Axial foot (one side) (rod side)	●	●	●
FA	Rod side flange	●	●	●
CB	Clevis bracket (pin and snap ring included)		●	●

Ⓑ Bore size (mm)	
6	ø6
10	ø10
16	ø16

Ⓒ Stroke (mm)		
Bore size	**Stroke *1**	**Custom stroke**
ø6	**5 to 100**	In 1 mm increments
ø10	**5 to 200**	
ø16	**5 to 260**	

Ⓓ Switch model No.

Axial lead wire	Radial lead wire	Contact	Voltage AC	Voltage DC	Indicator	Lead wire
T0H*	**T0V***	Reed	●	●	1-color LED	2-wire
T5H*	**T5V***		●	●	No indicator lamp	
T2H*	**T2V***	Proximity		●	1-color LED	2-wire
T3H*	**T3V***			●		3-wire
T2WH*	**T2WV***			●	2-color LED	2-wire
T3WH*	**T3WV***			●		3-wire

*** Lead wire length**	
Blank	1 m (standard)
3	3 m (option)
5	5 m (option)

Ⓔ Switch quantity	
R	1 on rod side
H	1 on head side
D	2
T	3

Ⓕ Accessory				
Bore size (ø)		6	10	16
I	Rod eye		●	●
Y	Rod clevis (pin and snap ring included)		●	●
B1	Eye bracket		●	●
B2	Clevis bracket		●	●

Precautions for model No. selection

*1 : Refer to page 34 for the min. stroke with switch.
*2 : Magnet is not built into the type without switch.
*3 : "I" and "Y" cannot be selected together.
*4 : Switches are shipped with the product.

[Example of model No.]
SCPD3-LF-LS-10-15-T2H-R-I
Model: Pencil shaped cylinder Fine speed

Ⓐ Mounting : Axial foot (single) (rod side)
Ⓑ Bore size : ø10 mm
Ⓒ Stroke : 15 mm
Ⓓ Switch model No. : Proximity switch T2H, lead wire 1 m
Ⓔ Switch quantity : 1 on rod side
Ⓕ Accessory : Rod eye

How to order switch

● Switch body + mounting bracket set

SCPD3 - T0H - 6

Bore size
(Item Ⓑ on page 36)

Switch model No.
(Item Ⓓ on page 36)

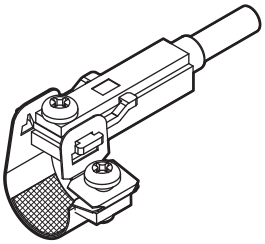

● Switch body (with fixing bracket)

SCPD3 - T0H

Switch model No.
(Item Ⓓ on page 36)

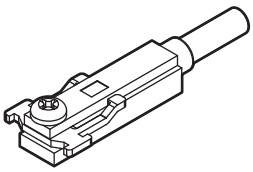

Note) The fixing bracket and cross-recessed pan head machine screw are different from those for the T standard switch.

● Mounting bracket set + fixing bracket

SCPD3 - TS - 6

Bore size
(Item Ⓑ on page 36)

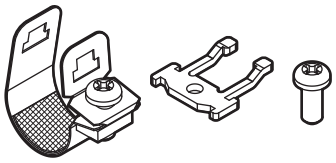

When 20 pcs or more are ordered, they will be packed together.

● Mounting bracket set

SCPD3 - T - 6

Bore size
(Item Ⓑ on page 36)

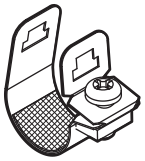

When 20 pcs or more are ordered, they will be packed together.

How to order mounting bracket

Bore size (mm) / Mounting bracket	ø6	ø10	ø16
Foot (LS)	P2-LS-6	P2-LS-10	P2-LS-16
Flange (FA)	P2-FA-6	P2-FA-10	P2-FA-16

Note: The foot (LS) mounting bracket is provided as 1 pc./set.

Measurement data

● Measuring method

SSD-F-16-30

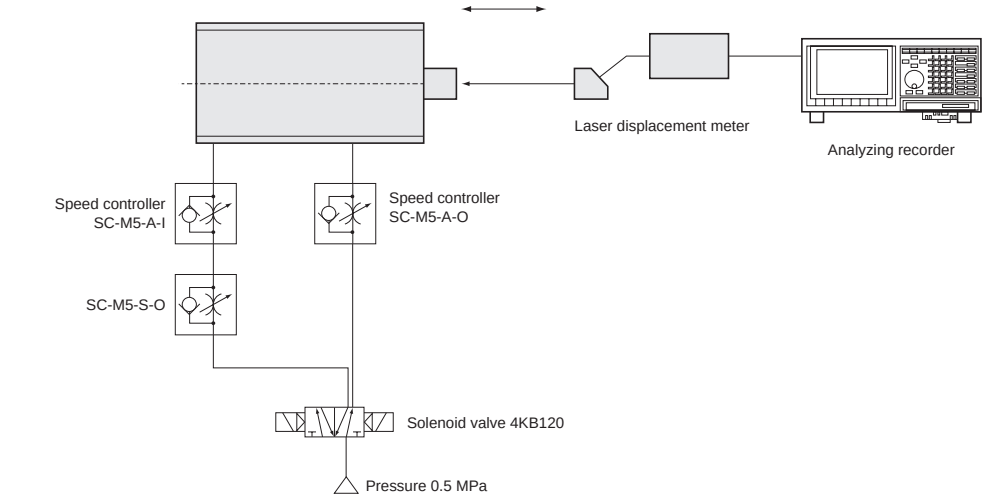

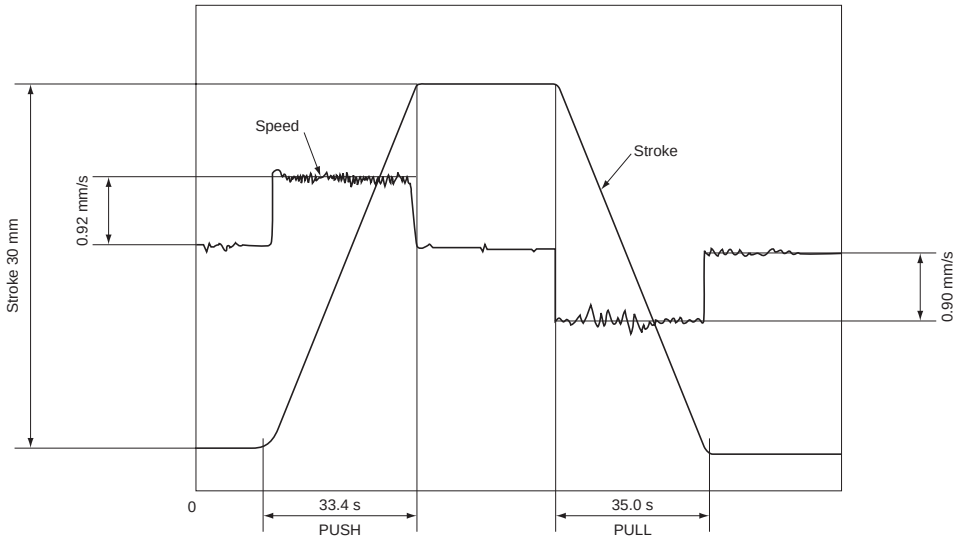

MEMO

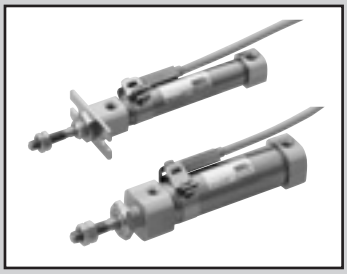

Pencil shaped cylinder Double acting/low speed

SCPD3-O Series

● Bore size: ø6/ø10/ø16

JIS symbol

RoHS CAD

Specifications

Item		SCPD3-O SCPD3-OL		
Bore size	mm	ø6	ø10	ø16
Actuation		Double acting/low speed		
Working fluid		Compressed air		
Max. working pressure	MPa	1.0 (≈150 psi, 10 bar)		
Min. working pressure	MPa	0.15 (≈22 psi, 1.5 bar)	0.1 (≈15 psi, 1 bar)	
Proof pressure	MPa	1.6 (≈230 psi, 16 bar)		
Ambient temperature	°C	-10 (14°F) to 60 (140°F) (no freezing)		
Port size		M5		
Stroke tolerance	mm	+1.0 0		
Working piston speed	mm/s	10 to 200		
Cushion		Rubber cushion		
Lubrication		Not available		
Allowable absorbed energy	J	0.012	0.041	0.162

Stroke

Bore size (mm)		Standard stroke (mm)	Max. stroke (mm)	Min. stroke (mm)
SCPD3-O	ø6	15/30/45/60	100	5
	ø10		200	
	ø16		260	

*1: The custom stroke is available in 1 mm increments.

Min. stroke with switch

	1		2	
Sketch	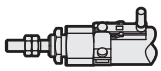 Rod side installation	Head side installation	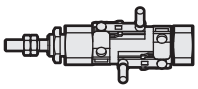 Different surface mounting	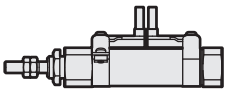 Same surface mounting
Min. stroke	5 mm		10 mm	28 mm

	3	
Sketch	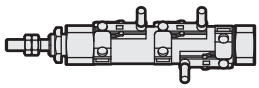 Different surface mounting	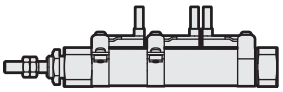 Same surface mounting
Min. stroke	38 mm	54 mm

Switch specifications

Item	2-wire proximity		3-wire proximity	
	T2H/T2V	T2WH/T2WV	T3H/T3V	T3WH/T3WV
Applications	Dedicated for programmable controller		For programmable controller, relay	
Output method	-		NPN output	
Power supply voltage	-		10 to 28 VDC	
Load voltage	10 to 30 VDC	24 VDC ±10%	30 VDC or less	
Load current	5 to 20 mA (*3)		100 mA or less	50 mA or less
Indicator	LED (Lit when ON)	Red/green LED (Lit when ON)	LED (Lit when ON)	Red/green LED (Lit when ON)
Leakage current	1 mA or less		10 μA or less	
Weight g	1 m:18 3 m:49 5 m:80		1 m:18 3 m:49 5 m:80	

Item	2-wire reed			
	T0H/T0V		T5H/T5V	
Applications	For programmable controller, relay		For programmable controller, relay, IC circuit (without indicator lamp), serial connection	
Load voltage	12/24 VDC	110 VAC	5/12/24 VDC	110 VAC
Load current	5 to 50 mA	7 to 20 mA	50 mA or less	20 mA or less
Indicator	LED (Lit when ON)		No indicator lamp	
Leakage current	0 mA		0 mA	
Weight g	1 m:18 3 m:49 5 m:80		1 m:18 3 m:49 5 m:80	

*1: Refer to Ending Page 1 for detailed switch specifications and dimensions.
*2: Switches other than the above models, such as switches with connectors, are also available. Refer to Ending Page 1.
*3: The max. load current is 20 mA at 25°C. The current is lower than 20 mA if the operating ambient temperature around the switch is higher than 25˚C. (5 to 10 mA at 60°C)

Cylinder weight

(Unit: g)

Type	Item / Bore size (mm)	Mounting bracket weight: Foot LS	Mounting bracket weight: Flange FA	Mounting bracket weight: Clevis CB	Product weight when at 0 mm stroke	Additional weight per 10 mm stroke	Switch weight (per switch)	Switch mounting bracket weight
SCPD3-O	ø6	6	4	-	13	1	Refer to the weight in the switch specifications.	2
	ø10	6	4	4	21	2		
	ø16	15	12	10	42	3		

(Example) Product weight of SCPD3-OL-LS-10-30-T0H-D
- Mounting bracket weight (foot) ..... 6 g
- Product weight for 0 mm stroke ..... 21 g
- Additional weight for 30 mm stroke ..... 2x30/10=6 g
- Switch weight ..... 2x(18+2)=40 g
- Product weight ..... 6+21+6+40=73 g

Theoretical thrust table

(Unit: N)

Bore size (mm)	Operating direction	Working pressure MPa 0.1	0.15	0.2	0.3	0.4	0.5	0.6	0.7	0.8	0.9	1.0
ø6	Push	-	4.24	5.65	8.48	11.3	14.1	17.0	19.8	22.6	25.4	28.3
	Pull	-	3.18	4.24	6.36	8.48	10.6	12.7	14.8	17.0	19.1	21.2
ø10	Push	7.85	11.8	15.7	23.6	31.4	39.3	47.1	55.0	62.8	70.7	78.5
	Pull	6.60	9.90	13.2	19.8	26.4	33.0	39.6	46.2	52.8	59.4	66.0
ø16	Push	20.1	30.2	40.2	60.3	80.4	1.01×10^2	1.21×10^2	1.41×10^2	1.61×10^2	1.81×10^2	2.01×10^2
	Pull	18.1	27.2	36.3	54.4	72.6	90.7	1.09×10^2	1.27×10^2	1.45×10^2	1.63×10^2	1.81×10^2

How to order

No switch (without magnet for switch)

SCPD3-O - 00 - 10 - 15 - O ———— Y

With switch (built-in magnet for switch)

SCPD3-OL - 00 - 10 - 15 - O - T2H - R - Y

Ⓐ Model No.

Ⓑ Mounting *1

Ⓒ Bore size

Ⓓ Stroke

Ⓔ Head side port direction *1

Ⓕ Switch model No. *3, *5
* indicates the lead wire length.

Ⓖ Switch quantity

Ⓗ Accessory *4

Code	Description
Ⓐ Model No.	
SCPD3-O	Double acting/low speed
SCPD3-OL	Double acting/low speed/with switch

Ⓑ Mounting

Bore size (ø)		6	10	16
00	Basic	●	●	●
LS	Axial foot (one side) (rod side)	●	●	●
FA	Rod side flange	●	●	●
CB	Clevis bracket (pin and snap ring included)		●	●

Ⓒ Bore size (mm)

6	ø6
10	ø10
16	ø16

Ⓒ Stroke (mm)

Bore size	Stroke *2	Custom stroke
ø6	**5 to 100**	In 1 mm increments
ø10	**5 to 200**	
ø16	**5 to 260**	

Ⓔ Head side port direction

Blank	Vertical
O	Axial direction

Ⓕ Switch model No.

Axial lead wire	Radial lead wire	Contact	Voltage AC	Voltage DC	Indicator	Lead wire
T0H*	**T0V***	Reed	●	●	1-color LED	2-wire
T5H*	**T5V***		●	●	No indicator lamp	
T2H*	**T2V***	Proximity		●	1-color LED	2-wire
T3H*	**T3V***			●		3-wire
T2WH*	**T2WV***			●	2-color LED	2-wire
T3WH*	**T3WV***			●		3-wire

*** Lead wire length**

Blank	1 m (standard)
3	3 m (option)
5	5 m (option)

Ⓖ Switch quantity

R	1 on rod side
H	1 on head side
D	2
T	3

Ⓗ Accessory

Bore size (ø)		6	10	16
I	Rod eye		●	●
Y	Rod clevis (pin and snap ring included)		●	●
B1	Eye bracket		●	●
B2	Clevis bracket		●	●

Precautions for model No. selection

*1 : The "CB" mounting is not available when the port direction is "O" (axial direction).
*2 : Refer to page 40 for the min. stroke with switch.
*3 : Magnet is not built into the type without switch.
*4 : "I" and "Y" cannot be selected together.
*5 : Switches are shipped with the product.

[Example of model No.]
SCPD3-OL-00-10-30-O-T2H-R-I
Model: Pencil shaped cylinder

Ⓐ Model No.	: Double acting/low speed
Ⓑ Mounting	: Basic
Ⓒ Bore size	: ø10 mm
Ⓓ Stroke	: 30 mm
Ⓔ Head side port direction	: Axial direction
Ⓕ Switch model No.	: Proximity switch T2H, lead wire 1 m
Ⓖ Switch quantity	: 1 on rod side
Ⓗ Accessory	: Rod eye

Head cover port direction

For the OO, LB and FA mounting, the head cover port direction can be selected from two options: perpendicular and horizontal to the axial direction.

How to order switch

● Switch body + mounting bracket set

SCPD3 - T0H - 6

Bore size (Item Ⓒ on page 42)

Switch model No. (Item Ⓕ on page 42)

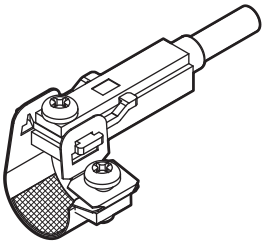

● Switch body (with fixing bracket)

SCPD3 - T0H

Switch model No. (Item Ⓕ on page 42)

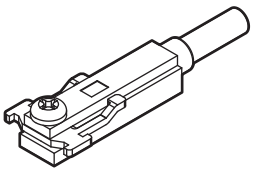

Note) The fixing bracket and cross-recessed pan head machine screw are different from those for the T standard switch.

● Mounting bracket set + fixing bracket

SCPD3 - TS - 6

Bore size (Item Ⓒ on page 42)

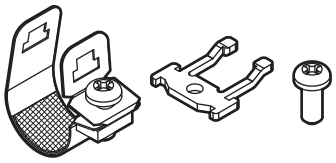

When 20 pcs or more are ordered, they will be packed together.

● Mounting bracket set

SCPD3 - T - 6

Bore size (Item Ⓒ on page 42)

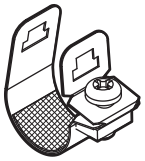

When 20 pcs or more are ordered, they will be packed together.

How to order mounting bracket

Bore size (mm) / Mounting bracket	ø6	ø10	ø16
Foot (LS)	P2-LS-6	P2-LS-10	P2-LS-16
Flange (FA)	P2-FA-6	P2-FA-10	P2-FA-16

Note: The foot (LS) mounting bracket is provided as 1 pc./set.

Dimensions

Same as those of double acting SCPD3 Series. Refer to pages 13 and 14.

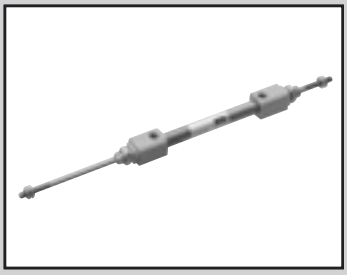

Pencil shaped cylinder Double acting/double rod

SCPD3-D/SCPD3-DT Series

● Bore size: ø6/ø10/ø16

JIS symbol

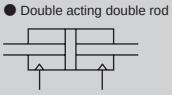

DT: Made to order

RoHS CAD

Specifications

1 MPa = 10 bar

Item		SCPD3-D SCPD3-DL			SCPD3-DT		
Bore size	mm	ø6	ø10	ø16	ø6	ø10	ø16
Actuation		Double acting/double rod			Double acting/double rod heat resistance		
Working fluid		Compressed air					
Max. working pressure	MPa	1.0 (≈150 psi, 10 bar)					
Min. working pressure	MPa	0.2 (≈29 psi)	0.1 (≈15 psi, 1 bar)		0.2 (≈29 psi)	0.1 (≈15 psi, 1 bar)	
Proof pressure	MPa	1.6 (≈230 psi, 16 bar)					
Ambient temperature	°C	-10 (14°F) to 60 (140°F) (no freezing)			5 (41°F) to 120 (248°F)		
Port size		M5					
Stroke tolerance	mm	+1.0 0					
Working piston speed	mm/s	50 to 750			50 to 750		
Cushion		Rubber cushion					
Lubrication		Not required (use turbine oil ISO VG32 if necessary for lubrication)			Not available		
Allowable absorbed energy	J	0.012	0.041	0.162	0.012	0.041	0.162

Stroke

Bore size (mm)	Standard stroke (mm)	Max. stroke (mm)	Min. stroke (mm)
ø6	15/30/45/60	60	5
ø10		120	
ø16			

*1: The custom stroke is available in 1 mm increments.

Min. stroke with switch

	1		2	
Sketch	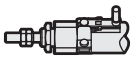 Rod side installation	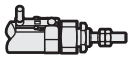 Head side installation	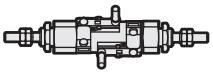 Different surface mounting	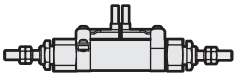 Same surface mounting
Min. stroke	5 mm		10 mm	28 mm

	3	
Sketch	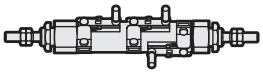 Different surface mounting	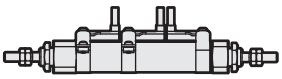 Same surface mounting
Min. stroke	38 mm	54 mm

Switch specifications

Item	2-wire proximity		3-wire proximity	
	T2H/T2V	T2WH/T2WV	T3H/T3V	T3WH/T3WV
Applications	Dedicated for programmable controller		For programmable controller, relay	
Output method	-		NPN output	
Power supply voltage	-		10 to 28 VDC	
Load voltage	10 to 30 VDC	24 VDC ±10%	30 VDC or less	
Load current	5 to 20 mA (*3)		100 mA or less	50 mA or less
Indicator	LED (Lit when ON)	Red/green LED (Lit when ON)	LED (Lit when ON)	Red/green LED (Lit when ON)
Leakage current	1 mA or less		10 μA or less	
Weight g	1 m:18 3 m:49 5 m:80		1 m:18 3 m:49 5 m:80	

Item	2-wire reed			
	T0H/T0V		T5H/T5V	
Applications	For programmable controller, relay		For programmable controller, relay, IC circuit (without indicator lamp), serial connection	
Load voltage	12/24 VDC	110 VAC	5/12/24 VDC	110 VAC
Load current	5 to 50 mA	7 to 20 mA	50 mA or less	20 mA or less
Indicator	LED (Lit when ON)		No indicator lamp	
Leakage current	0 mA		0 mA	
Weight g	1 m:18 3 m:49 5 m:80		1 m:18 3 m:49 5 m:80	

*1: Refer to Ending Page 1 for detailed switch specifications and dimensions.
*2: Switches other than the above models, such as switches with connectors, are also available. Refer to Ending Page 1.
*3: The max. load current is 20 mA at 25°C. The current is lower than 20 mA if the operating ambient temperature around the switch is higher than 25˚C. (5 to 10 mA at 60°C)

Cylinder weight

(Unit: g)

Type	Item / Bore size (mm)	Mounting bracket weight: Foot LS	Foot LB	Flange FA	Product weight when at 0 mm stroke	Additional weight per 10 mm stroke	Switch weight (per switch)	Switch mounting bracket weight
SCPD3-D SCPD3-DT	ø6	6	12	4	18	2	Refer to the weight in the switch specifications.	2
	ø10	6	12	4	28	3		
	ø16	15	30	12	55	5		

(Example) Product weight of SCPD3-DL-LS-10-30-TOH-D
- Mounting bracket weight (foot) ..... 6 g
- Product weight for 0 mm stroke ..... 28 g
- Additional weight for 30 mm stroke ..... 2x3/10=9 g
- Switch weight ..... 2x(18+2)=40 g
- Product weight ..... 6+28+9+40=83 g

Theoretical thrust table

(Unit: N)

Bore size (mm)	Operating direction	Working pressure MPa										
		0.1	0.15	0.2	0.3	0.4	0.5	0.6	0.7	0.8	0.9	1.0
ø6	Push/Pull	-	-	4.24	6.36	8.48	10.6	12.7	14.8	17.0	19.1	21.2
ø10	Push/Pull	6.60	9.90	13.2	19.8	26.4	33.0	39.6	46.2	52.8	59.4	66.0
ø16	Push/Pull	18.1	27.2	36.3	54.4	72.6	90.7	1.09×10^2	1.27×10^2	1.45×10^2	1.63×10^2	1.81×10^2

SCPD3-D Series

How to order

No switch (without magnet for switch)

SCPD3-D - LS - 10 - 15 ——— I

With switch (built-in magnet for switch)

SCPD3-DL - LS - 10 - 15 - T2H - R - I

Ⓐ Model No.
Ⓑ Mounting
Ⓒ Bore size
Ⓓ Stroke
Ⓔ Switch model No. *2, *4
* indicates the lead wire length.
Ⓕ Switch quantity
Ⓖ Accessory

Code	Description	Ⓐ Model No. Double rod SCPD3-D	Double rod heat resistance SCPD3-DT
Ⓑ Mounting			
00	Basic	●	●
LS	Axial foot (one side) (rod side)	●	●
LB	Two-sided axial foot	●	●
FA	Rod side flange	●	●
Ⓒ Bore size (mm)			
6	ø6	●	●
10	ø10	●	●
16	ø16	●	●

Ⓓ Stroke (mm)

Bore size	Stroke *1	Custom stroke
ø6	**5 to 60**	In 1 mm increments
ø10	**5 to 120**	
ø16	**5 to 120**	

Ⓔ Switch model No.

Axial lead wire	Radial lead wire	Contact	Voltage AC	Voltage DC	Indicator	Lead wire		
T0H*	**T0V***	Reed	●	●	1-color LED	2-wire	●	
T5H*	**T5V***	Reed	●	●	No indicator lamp	2-wire	●	
T2H*	**T2V***	Proximity		●	1-color LED	2-wire	●	
T3H*	**T3V***	Proximity		●	1-color LED	3-wire	●	
T2WH*	**T2WV***	Proximity		●	2-color LED	2-wire	●	
T3WH*	**T3WV***	Proximity		●	2-color LED	3-wire	●	

* Lead wire length			
Blank	1 m (standard)	●	
3	3 m (option)	●	
5	5 m (option)	●	

Ⓕ Switch quantity			
R	1 on rod side	●	
H	1 on head side	●	
D	2	●	
T	3	●	

Ⓖ Accessory

Bore size (ø)		ø6	ø10	ø16	ø6	ø10	ø16
I	Rod eye		●	●		●	●
Y	Rod clevis (pin and snap ring included)		●	●		●	●

Precautions for model No. selection

*1 : Refer to page 44 for the min. stroke with switch.
*2 : Magnet is not built into the type without switch.
*3 : SCPD3-D is copper and PTFE free as standard.
*4 : Switches are shipped with the product.

[Example of model No.]
SCPD3-DL-LS-10-15-T2H-R-I

Ⓐ	Model No.	: Pencil shaped cylinder/double rod
Ⓑ	Mounting	: Axial foot (single) (rod side)
Ⓒ	Bore size	: ø10 mm
Ⓓ	Stroke	: 15 mm
Ⓔ	Switch model No.	: Proximity switch T2H, lead wire 1 m
Ⓕ	Switch quantity	: 1 on rod side
Ⓖ	Accessory	: Rod eye

How to order mounting bracket

Bore size (mm) / Mounting bracket	ø6	ø10	ø16
Foot (LS)	P2-LS-6	P2-LS-10	P2-LS-16
Foot (LB)	P2-LB-6	P2-LB-10	P2-LB-16
Flange (FA)	P2-FA-6	P2-FA-10	P2-FA-16

Note: The foot (LS) mounting bracket is provided as 1 pc./set.

How to order switch

● Switch body + mounting bracket set

SCPD3 - T0H - 6

Bore size (Item Ⓒ on page 46)

Switch model No. (Item Ⓔ on page 46)

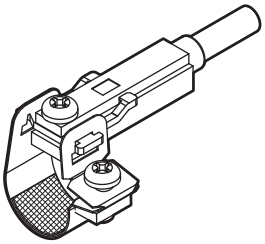

● Switch body (with fixing bracket)

SCPD3 - T0H

Switch model No. (Item Ⓔ on page 46)

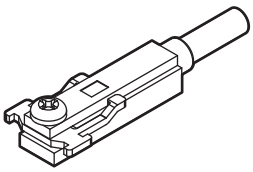

Note) The fixing bracket and cross-recessed pan head machine screw are different from those for the T standard switch.

● Mounting bracket set + fixing bracket

SCPD3 - TS - 6

Bore size (Item Ⓒ on page 46)

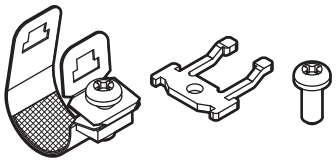

When 20 pcs or more are ordered, they will be packed together.

● Mounting bracket set

SCPD3 - T - 6

Bore size (Item Ⓒ on page 46)

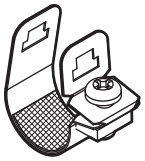

When 20 pcs or more are ordered, they will be packed together.

Internal structure and parts list

● Double rod
SCPD3-D
SCPD3-DL (with switch)

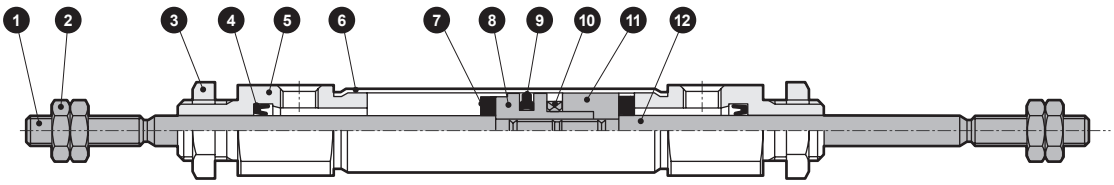

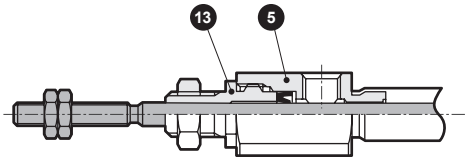

For ø6

Cannot be disassembled

● This product cannot be disassembled.

No.	Part name	Material	Remarks	No.	Part name	Material	Remarks
1	Piston rod 1	Stainless steel		8	Piston	Aluminum alloy	
2	Rod nut	Steel	Nickeling	9	Piston packing	Nitrile rubber	
3	Hexagon nut	Steel	Nickeling	10	Magnet	-	With switch only
4	Rod packing	Nitrile rubber		11	Spacer	Aluminum alloy	
5	Rod cover	Aluminum alloy	Hard alumite	12	Piston rod 2	Stainless steel	
6	Cylinder tube	Stainless steel		13	Rod metal	Aluminum alloy	Hard alumite
7	Cushion rubber	Urethane rubber					

Dimensions

● SCPD3-D (L) Basic (00)

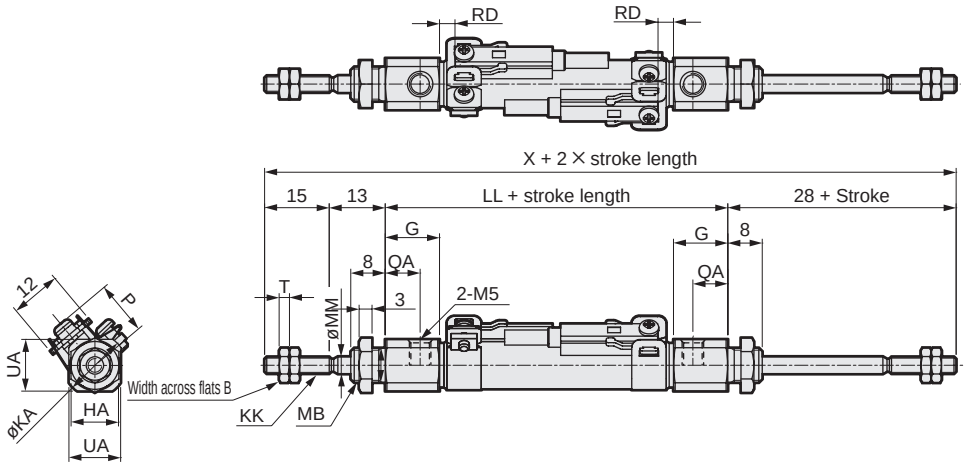

*1 : The dimensions are the same in the type without switch. (Magnet is not built in.)
*2 : As the thread depth of ø6/ø10 port is 3.8 mm, use a fitting with 3.8 mm or less thread length if necessary.
*3 : For the dimensions of the accessories, refer to page 15.

Code / Bore size (mm)	Basic (00) Basic dimensions												With switch		
	B	G	HA	KA	KK	LL	MB	MM	QA	T	UA	X	T0, T5, T2, T3 RD	T2W, T3W RD	P
ø6	5.5	17	8	13.5	M3	56	M6	3	13	1.8	11	112	2	4	11.5
ø10	7	12.5	11	14.5	M4	54.5	M8x1.0	4	8	2.4	12	110.5	5.5	7.5	13.5
ø16	8	13	14	21.5	M5	55	M10x1.0	5	8.5	3.2	18	111	4	6	17.0

● Axial foot (one side) (LS)

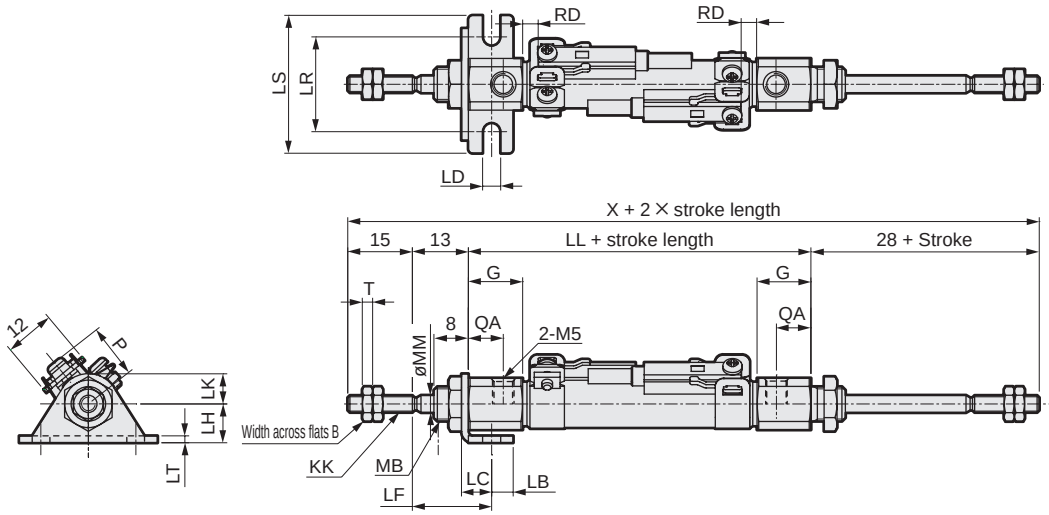

*1 : The dimensions are the same in the type without switch. (Magnet is not built in.)
*2 : As the thread depth of ø6/ø10 port is 3.8 mm, use a fitting with 3.8 mm or less thread length if necessary.
*3 : For the dimensions of the accessories, refer to page 15.

Code / Bore size (mm)	Axial foot (single) (LS) Basic dimensions									Mounting dimensions									With switch		
	B	G	KK	LL	MB	MM	QA	T	X	LB	LC	LD	LF	LH	LK	LR	LS	LT	T0, T5, T2, T3 RD	T2W, T3W RD	P
ø6	5.5	17	M3	56	M6	3	13	1.8	112	5	7	4.2	18.4	9	7	22	32	1.6	2	4	11.5
ø10	7	12.5	M4	54.5	M8x1.0	4	8	2.4	110.5	5	7	4.2	18.4	9	7	22	32	1.6	5.5	7.5	13.5
ø16	8	13	M5	55	M10x1.0	5	8.5	3.2	111	6	9	5.2	19.7	14	10	29	42	2.3	4.0	6	17.0

Dimensions

● Two-sided axial foot (LB)

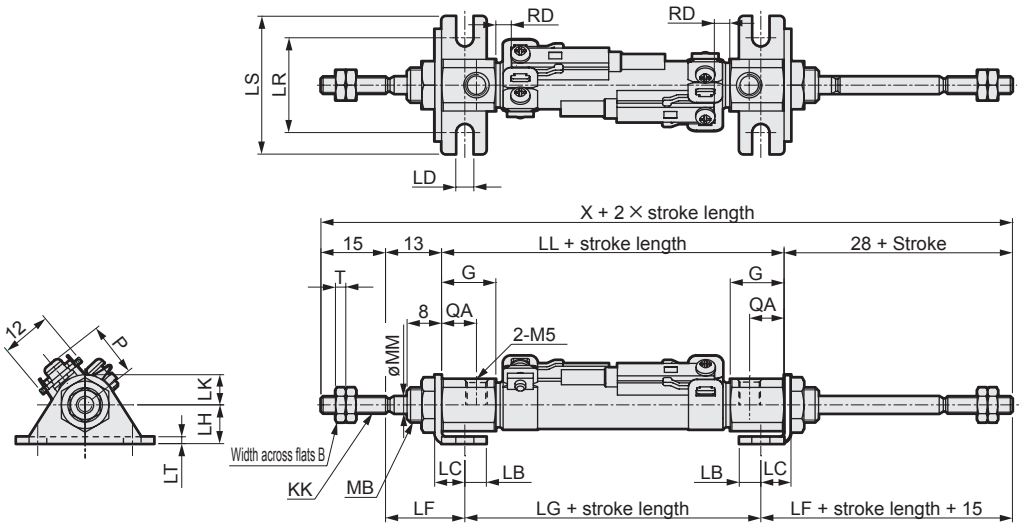

*1 : The dimensions are the same in the type without switch. (Magnet is not built in.)
*2 : As the thread depth of ø6/ø10 port is 3.8 mm, use a fitting with 3.8 mm or less thread length if necessary.
*3 : For the dimensions of the accessories, refer to page 15.

Code	Two-sided axial foot (LB) Basic dimensions									Mounting dimensions										With switch		
																				T0, T5, T2, T3	T2W, T3W	
Bore size (mm)	B	G	KK	LL	MB	MM	QA	T	X	LB	LC	LD	LF	LH	LG	LK	LR	LS	LT	RD	RD	P
ø6	5.5	17	M3	56	M6	3	13	1.8	112	5	7	4.2	18.4	9	45.2	7	22	32	1.6	2	4	11.5
ø10	7	12.5	M4	54.5	M8x1.0	4	8	2.4	110.5	5	7	4.2	18.4	9	43.7	7	22	32	1.6	5.5	7.5	13.5
ø16	8	13	M5	55	M10x1.0	5	8.5	3.2	111	6	9	5.2	19.7	14	41.6	10	29	42	2.3	4	6	17.0

● Rod side flange (FA)

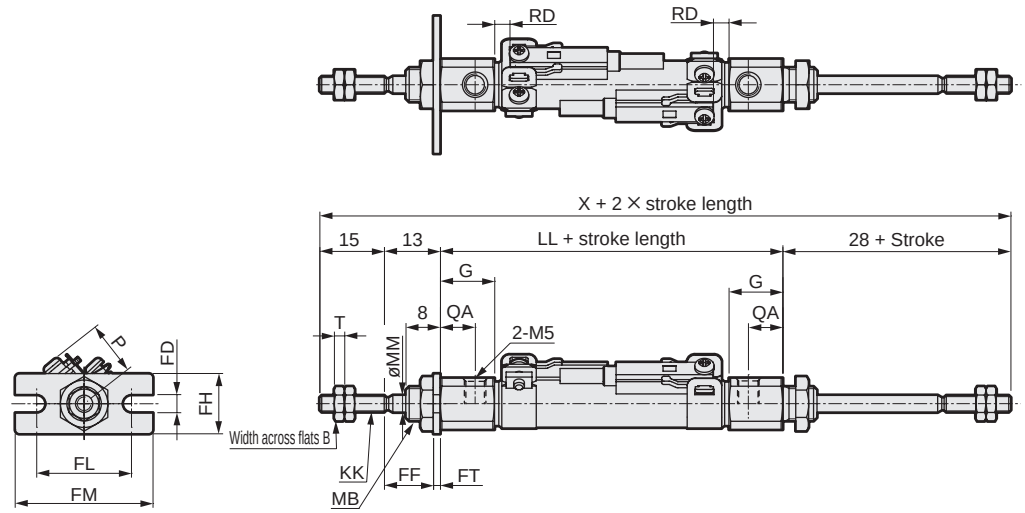

*1 : The dimensions are the same in the type without switch. (Magnet is not built in.)
*2 : As the thread depth of ø6/ø10 port is 3.8 mm, use a fitting with 3.8 mm or less thread length if necessary.
*3 : For the dimensions of the accessories, refer to page 15.

Code	Rod side flange (FA) Basic dimensions									Mounting dimensions						With switch		
																T0, T5, T2, T3	T2W, T3W	
Bore size (mm)	B	G	KK	LL	MB	MM	QA	T	X	FD	FF	FH	FL	FM	FT	RD	RD	P
ø6	5.5	17	M3	56	M6	3	13	1.8	112	4.2	11.4	14	22	32	1.6	2	4	11.5
ø10	7	12.5	M4	54.5	M8x1.0	4	8	2.4	110.5	4.2	11.4	14	22	32	1.6	5.5	7.5	13.5
ø16	8	13	M5	55	M10x1.0	5	8.5	3.2	111	5.2	10.7	20	29	42	2.3	4	6	17.0

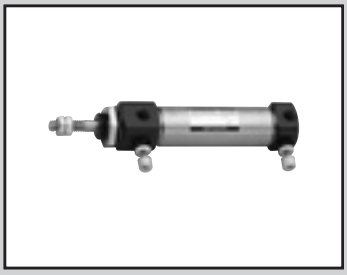

Pencil shaped cylinder
Double acting/with speed controller

SCPD3-Z Series

● Bore size: ø10/ø16

Made to order

RoHS CAD

Specifications

Item		SCPD3-Z SCPD3-ZL	
Bore size	mm	ø10	ø16
Actuation		Double acting/with speed controller	
Working fluid		Compressed air	
Max. working pressure	MPa	1.0 (≈150 psi, 10 bar)	
Min. working pressure	MPa	0.1 (≈15 psi, 1 bar)	
Proof pressure	MPa	1.6 (≈230 psi, 16 bar)	
Ambient temperature	°C	-10 (14°F) to 60 (140°F) (no freezing)	
Port size		M5	
Stroke tolerance	mm	$^{+1.0}_{0}$	
Working piston speed	mm/s	50 to 750	
Cushion		Rubber cushion	
Lubrication		Not required (use turbine oil ISO VG32 if necessary for lubrication)	
Allowable absorbed energy	J	0.041	0.162

Stroke

Bore size (mm)	Standard stroke (mm)	Max. stroke (mm)	Min. stroke (mm)
ø10	15/30/45/60	200	5
ø16		260	

*1: The custom stroke is available in 1 mm increments.

Min. stroke with switch

	1		2	
Sketch	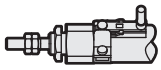 Rod side installation	Head side installation	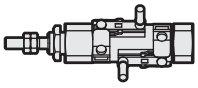 Different surface mounting	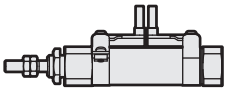 Same surface mounting
Min. stroke	5 mm		10 mm	28 mm

	3	
Sketch	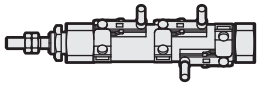 Different surface mounting	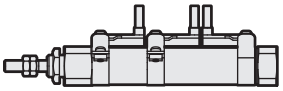 Same surface mounting
Min. stroke	38 mm	54 mm

Switch specifications

Item	2-wire proximity		3-wire proximity	
	T2H/T2V	T2WH/T2WV	T3H/T3V	T3WH/T3WV
Applications	Dedicated for programmable controller		For programmable controller, relay	
Output method	-		NPN output	
Power supply voltage	-		10 to 28 VDC	
Load voltage	10 to 30 VDC	24 VDC ±10%	30 VDC or less	
Load current	5 to 20 mA (*3)		100 mA or less	50 mA or less
Indicator	LED (Lit when ON)	Red/green LED (Lit when ON)	LED (Lit when ON)	Red/green LED (Lit when ON)
Leakage current	1 mA or less		10 μA or less	
Weight g	1 m:18 3 m:49 5 m:80		1 m:18 3 m:49 5 m:80	

Item	2-wire reed			
	T0H/T0V		T5H/T5V	
Applications	For programmable controller, relay		For programmable controller, relay, IC circuit (without indicator lamp), serial connection	
Load voltage	12/24 VDC	110 VAC	5/12/24 VDC	110 VAC
Load current	5 to 50 mA	7 to 20 mA	50 mA or less	20 mA or less
Indicator	LED (Lit when ON)		No indicator lamp	
Leakage current	0 mA		0 mA	
Weight g	1 m:18 3 m:49 5 m:80		1 m:18 3 m:49 5 m:80	

*1: Refer to Ending Page 1 for detailed switch specifications and dimensions.
*2: Switches other than the above models, such as switches with connectors, are also available. Refer to Ending Page 1.
*3: The max. load current is 20 mA at 25°C. The current is lower than 20 mA if the operating ambient temperature around the switch is higher than 25˚C. (5 to 10 mA at 60°C)

Cylinder weight

(Unit: g)

Type	Stroke / Bore size (mm)	No switch				With switch (2 switches)				Switch mounting bracket	Switch weight (per switch)
		15st	30st	45st	60st	15st	30st	45st	60st		
SCPD3-Z	ø10	36	41	46	51	84	89	94	99	2	Refer to the weight in the switch specifications.
	ø16	66	74	82	90	114	122	130	138		

Mounting bracket weight

(Unit: g)

Applicable bore size	Mounting		
	Foot LS	Flange FA	Clevis CB
ø10	6	4	4
ø16	15	12	10

Theoretical thrust table

(Unit: N)

Bore size (mm)	Operating direction	Working pressure MPa										
		0.1	0.15	0.2	0.3	0.4	0.5	0.6	0.7	0.8	0.9	1.0
ø10	Push	7.85	11.8	15.7	23.6	31.4	39.3	47.1	55.0	62.8	70.7	78.5
	Pull	6.60	9.90	13.2	19.8	26.4	33.0	39.6	46.2	52.8	59.4	66.0
ø16	Push	20.1	30.2	40.2	60.3	80.4	1.01×10^2	1.21×10^2	1.41×10^2	1.61×10^2	1.81×10^2	2.01×10^2
	Pull	18.1	27.2	36.3	54.4	72.6	90.7	1.09×10^2	1.27×10^2	1.45×10^2	1.63×10^2	1.81×10^2

How to order

No switch (without magnet for switch)

SCPD3-Z — LS - 10 - 15 ———— I

With switch (built-in magnet for switch)

SCPD3-ZL - LS - 10 - 15 - T2H - R - I

Ⓐ Mounting

Ⓑ Bore size

Ⓒ Stroke

Ⓓ Switch model No.

Ⓔ Switch quantity

Ⓕ Accessory *2

Code	Description
Ⓐ Mounting	
00	Basic
LS	Axial foot (one side) (rod side)
FA	Rod side flange
CB	Clevis bracket (pin and snap ring included)

Ⓑ Bore size (mm)	
10	ø10
16	ø16

Ⓒ Stroke (mm)		
Bore size	**Stroke *1**	**Custom stroke**
ø10	**5 to 200**	**In 1 mm increments**
ø16	**5 to 260**	

Ⓓ Switch model No.

Axial lead wire	Radial lead wire	Contact	Voltage AC	Voltage DC	Indicator	Lead wire
T0H*	**T0V***	Reed	●	●	1-color LED	2-wire
T5H*	**T5V***	Reed	●	●	No indicator lamp	2-wire
T2H*	**T2V***	Proximity		●	1-color LED	2-wire
T3H*	**T3V***	Proximity		●	1-color LED	3-wire
T2WH*	**T2WV***	Proximity		●	2-color LED	2-wire
T3WH*	**T3WV***	Proximity		●	2-color LED	3-wire

*** Lead wire length**	
Blank	1 m (standard)
3	3 m (option)
5	5 m (option)

Ⓔ Switch quantity	
R	1 on rod side
H	1 on head side
D	2
T	3

Ⓕ Accessory	
I	Rod eye
Y	Rod clevis (pin and snap ring included)

⚠ Precautions for model No. selection

*1 : Refer to page 50 for the min. stroke with switch.
*2 : "I" and "Y" cannot be selected together.
*3 : Refer to Ending Page 85 for custom specifications of rod end form.
*4 : Refer to page 6 for combination of variations/ options.

[Example of model No.]

SCPD3-ZL-00-10-15-T2H-R-I

Model: Pencil shaped cylinder Double acting with speed controller

Ⓐ Mounting : Basic
Ⓑ Bore size : ø10 mm
Ⓒ Stroke : 15 mm
Ⓓ Switch model No. : Proximity switch T2H
Ⓔ Switch quantity : 1 included (on rod side)
Ⓕ Accessory : Rod eye

How to order switch

● Switch body + mounting bracket set

SCPD3 - T0H - 6

Bore size (Item Ⓑ above)

Switch model No. (Item Ⓓ above)

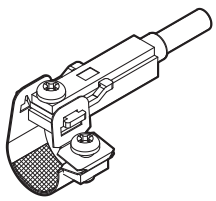

● Switch body (with fixing bracket)

SCPD3 - T0H

Switch model No. (Item Ⓓ above)

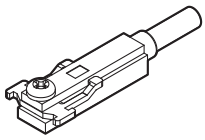

Note) The fixing bracket and cross-recessed pan head machine screw are different from those for the T standard switch.

● Mounting bracket set + fixing bracket

SCPD3 - TS - 6

Bore size (Item Ⓑ above)

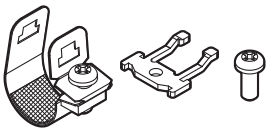

When 20 pcs or more are ordered, they will be packed together.

● Mounting bracket set

SCPD3 - T - 6

Bore size (Item Ⓑ above)

When 20 pcs or more are ordered, they will be packed together.

How to order mounting bracket

Bore size (mm) / Mounting bracket	ø10	ø16
Foot (LS)	P2-LS-10M	P2-LS-16M
Flange (FA)	P2-FA-10M	P2-FA-16M

Note: The foot (LS) mounting bracket is provided as 1 pc./set.

Internal structure and parts list

● SCPD3-Z

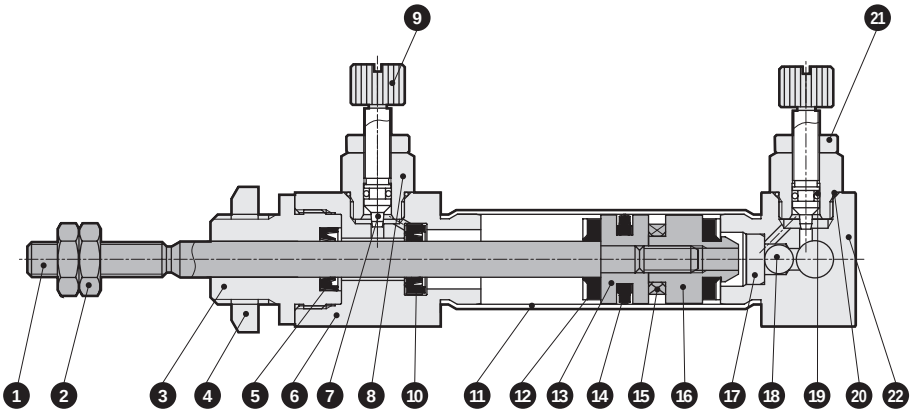

Cannot be disassembled

* This product is a caulked and cannot be disassembled.

No.	Part name	Material	Remarks	No.	Part name	Material	Remarks
1	Piston rod	Stainless steel		12	Cushion rubber	Urethane rubber	
2	Rod nut	Steel	Nickeling	13	Piston	Aluminum alloy	
3	Rod metal	Aluminum alloy	Hard alumite	14	Piston packing	Nitrile rubber	
4	Hexagon nut	Steel	Nickeling	15	Magnet	-	With switch only
5	Rod packing	Nitrile rubber		16	Spacer	Aluminum alloy	
6	Rod cover	Aluminum alloy	Hard alumite	17	Check ball holder	Aluminum alloy	
7	Needle B	Stainless steel		18	Check ball	Urethane rubber	
8	Needle holder	Aluminum alloy	Hard alumite	19	O-ring	Nitrile rubber	
9	Knob	Aluminum alloy	Chromate	20	O-ring	Nitrile rubber	
10	Check packing	Nitrile rubber		21	Lock nut	Aluminum alloy	Chromate
11	Cylinder tube	Stainless steel		22	Head cover	Aluminum alloy	Hard alumite

SCP*3
CMK2
CMA2
SCM
SCG
SCA2
SCS2
CKV2
CAV2/COVP/N2
SSD2
SSG
SSD
CAT
MDC2
MVC
SMG
MSD/MSDG
FC*
STK
SRL3
SRG3
SRM3
SRT3
MRL2
MRG2
SM-25
ShkAbs
FJ
FK
Spd Contr
Ending

Dimensions CAD

● SCPD3-Z(L) Basic (OO)

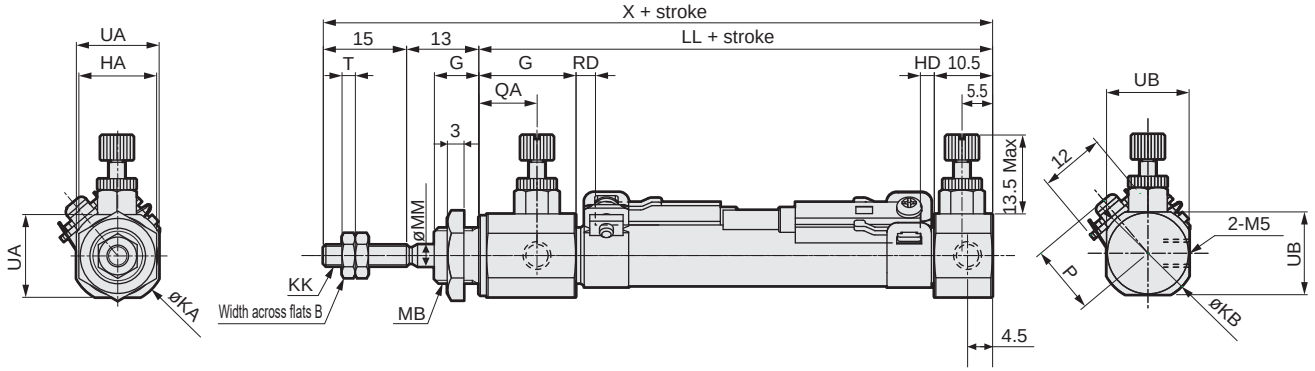

*2 : As the thread depth of ø6/ø10 port is 3.8 mm, use a fitting with 3.8 mm or less thread length if necessary.

*1: The dimensions are the same in the type without switch. (Magnet is not built in.)

*3 : For the dimensions of the accessories, refer to page 15.

Code / Bore size (mm)	Basic (00) Basic dimensions													
	B	G	HA	KA	KB	KK	LL	MB	MM	QA	T	UA	UB	X
ø10	7	17.5	14	17.5	17.5	M4	52.5	M10x1.0	4	10.5	2.4	15	15	80.5
ø16	8	18	17	21.5	21.5	M5	52.5	M12x1.0	5	11	3.2	18	18	80.5

Code / Bore size (mm)	With switch				
	T0, T5, T2, T3		T2W, T3W		P
	RD	HD	RD	HD	
ø10	3.5	2.5	5.5	4	13.5
ø16	2	3.5	3.5	5	17

● Axial foot (one side) (LS)

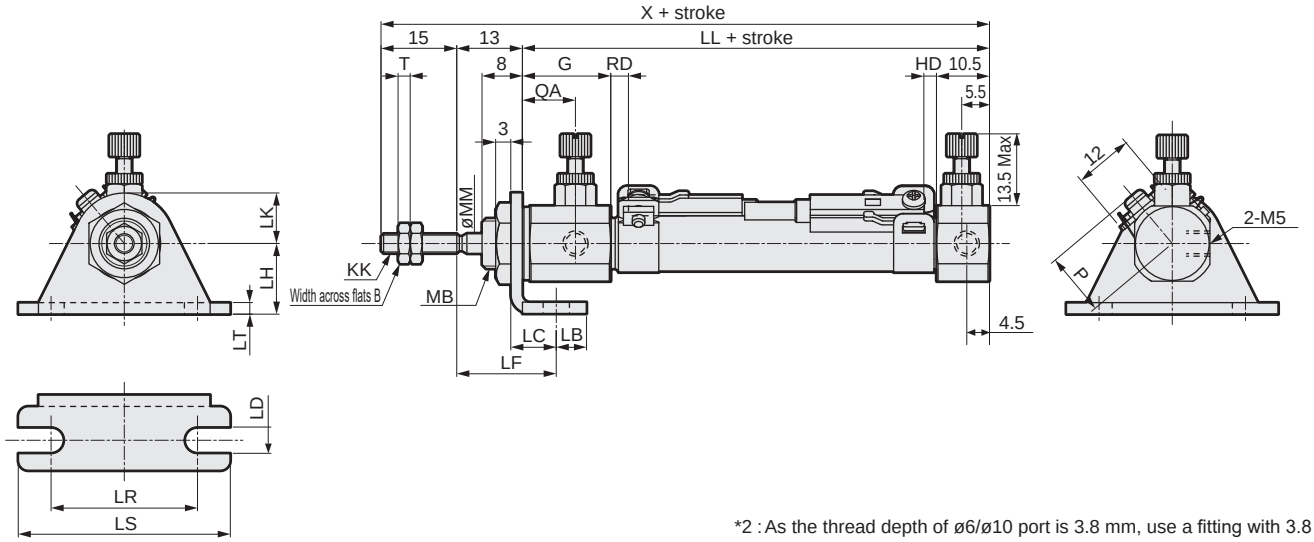

*2 : As the thread depth of ø6/ø10 port is 3.8 mm, use a fitting with 3.8 mm or less thread length if necessary.

*1 : The dimensions are the same in the type without switch. (Magnet is not built in.)

*3 : For the dimensions of the accessories, refer to page 15.

Code / Bore size (mm)	Axial foot (single) (LS) Basic dimensions								Mounting dimensions								
	B	G	KK	MB	MM	QA	T	X	LB	LC	LD	LF	LL	LH	LK	LR	LS
ø10	7	17.5	M4	M10x1.0	4	10.5	2.4	80.5	6	9	5.2	19.7	52.5	14	10	29	42
ø16	8	18	M5	M12x1.0	5	11	3.2	80.5	6	9	5.2	19.7	52.5	14	10	29	42

Code / Bore size (mm)		With switch				
	LT	T0, T5, T2, T3		T2W, T3W		P
		RD	HD	RD	HD	
ø10	2.3	3.5	2.5	5.5	4	13.5
ø16	2.3	2	3.5	3.5	5	17

Dimensions

● Rod side flange (FA)

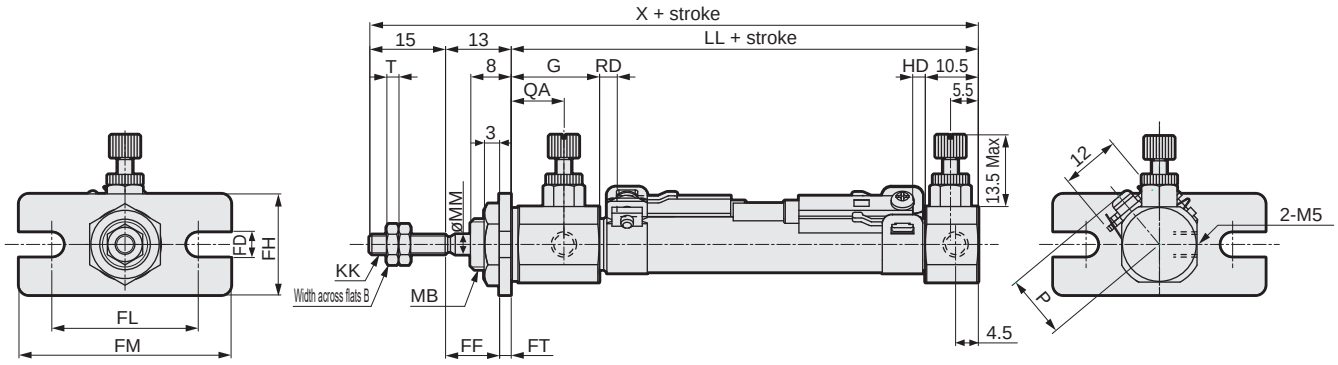

*1 : The dimensions are the same in the type without switch. (Magnet is not built in.)
*2 : As the thread depth of ø6/ø10 port is 3.8 mm, use a fitting with 3.8 mm or less thread length if necessary.
*3 : For the dimensions of the accessories, refer to page 15.

Code / Bore size (mm)	Rod side flange (FA) Basic dimensions									Mounting dimensions				
	B	G	KK	LL	MB	MM	QA	T	X	FD	FF	FH	FL	FM
ø10	7	17.5	M4	52.5	M10x1.0	4	10.5	2.4	80.5	5.2	10.7	20	29	42
ø16	8	18	M5	52.5	M12x1.0	5	11	3.2	80.5	5.2	10.7	20	29	42

Code / Bore size (mm)	With switch					
	FT	T0, T5, T2, T3		T2W, T3W		P
		RD	HD	RD	HD	
ø10	2.3	3.5	2.5	5.5	4	13.5
ø16	2.3	2	3.5	3.5	5	17

● Clevis bracket (CB)

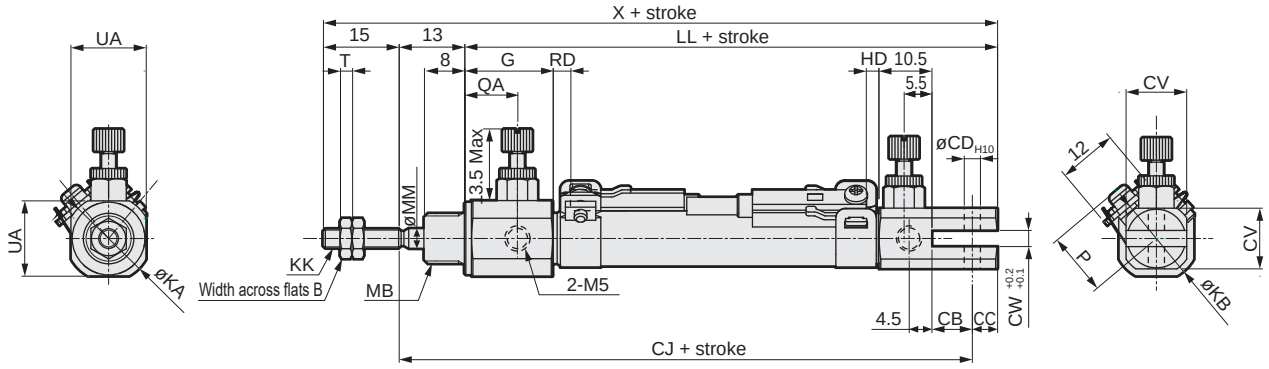

*1 : The dimensions are the same in the type without switch. (Magnet is not built in.)
*2 : As the thread depth of ø6/ø10 port is 3.8 mm, use a fitting with 3.8 mm or less thread length if necessary.
*3 : For the dimensions of the accessories, refer to page 15.

Code / Bore size (mm)	Clevis bracket (CB) Basic dimensions											Mounting dimensions		
	B	G	KA	KB	KK	LL	MB	MM	QA	T	UA	CA	CB	CC
ø10	7	17.5	17.5	17.5	M4	65.5	M10x1.0	4	10.5	2.4	15	93.5	8	5
ø16	8	18	21.5	21.5	M5	72.5	M12x1.0	5	11	3.2	18	100.5	10	10

Code / Bore size (mm)	With switch								
	CD	CJ	CV	CW	T0, T5, T2, T3		T2W, T3W		P
					RD	HD	RD	HD	
ø10	3.2	73.5	15	3.2	3.5	2.5	5.5	4	13.5
ø16	5	75.5	18	6.5	2	3.5	3.5	5	17

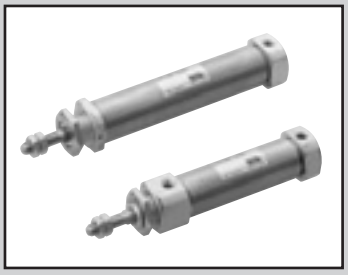

Pencil shaped cylinder

Single acting/push/rotation-stop **SCPS3-M Series**

Double acting/rotation-stop **SCPD3-M Series**

● Bore size: ø10/ø16

JIS symbol

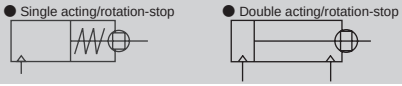

RoHS CAD

Specifications

Item		SCPS3-M SCPS3-ML		SCPD3-M SCPD3-ML	
Bore size	mm	ø10	ø16	ø10	ø16
Actuation		Single acting/rotation-stop		Double acting/rotation-stop	
Working fluid		Compressed air			
Max. working pressure	MPa	1.0 (≈150 psi, 10 bar)			
Min. working pressure	MPa	0.15 (≈22 psi, 1.5 bar)		0.1 (≈15 psi, 1 bar)	
Proof pressure	MPa	1.6 (≈230 psi, 16 bar)			
Ambient temperature	°C	-10 (14°F) to 60 (140°F) (no freezing)			
Port size		M5			
Stroke tolerance	mm	+1.0 0			
Working piston speed	mm/s	50 to 750			
Cushion		Rubber cushion			
Lubrication		Not required (use turbine oil ISO VG32 if necessary for lubrication)			
Non-rotating accuracy (Note)		±2°			
Allowable absorbed energy	J	0.041	0.162	0.041	0.162

(Note): Value for 0 mm stroke. (excluding sag of piston rod)

Stroke

Bore size (mm)		Standard stroke (mm)	Max. stroke (mm)	Min. stroke (mm)
SCPS3-M	ø10	15/30/45/60	120	5
	ø16			
SCPD3-M	ø10		200	
	ø16		260	

*1: The custom stroke is available in 1 mm increments.

Min. stroke with switch

	1		2	
Sketch	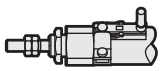 Rod side installation	Head side installation	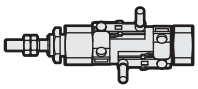 Different surface mounting	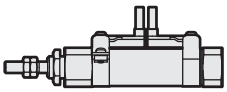 Same surface mounting
Min. stroke	5 mm		10 mm	28 mm

	3	
Sketch	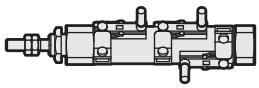 Different surface mounting	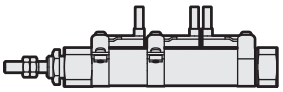 Same surface mounting
Min. stroke	38 mm	54 mm

Switch specifications

Item	2-wire proximity		3-wire proximity	
	T2H/T2V	T2WH/T2WV	T3H/T3V	T3WH/T3WV
Applications	Dedicated for programmable controller		For programmable controller, relay	
Output method	-		NPN output	
Power supply voltage	-		10 to 28 VDC	
Load voltage	10 to 30 VDC	24 VDC ±10%	30 VDC or less	
Load current	5 to 20 mA (*3)		100 mA or less	50 mA or less
Indicator	LED (Lit when ON)	Red/green LED (Lit when ON)	LED (Lit when ON)	Red/green LED (Lit when ON)
Leakage current	1 mA or less		10 μA or less	
Weight g	1 m:18 3 m:49 5 m:80		1 m:18 3 m:49 5 m:80	

Item	2-wire reed			
	T0H/T0V		T5H/T5V	
Applications	For programmable controller, relay		For programmable controller, relay, IC circuit (without indicator lamp), serial connection	
Load voltage	12/24 VDC	110 VAC	5/12/24 VDC	110 VAC
Load current	5 to 50 mA	7 to 20 mA	50 mA or less	20 mA or less
Indicator	LED (Lit when ON)		No indicator lamp	
Leakage current	0 mA		0 mA	
Weight g	1 m:18 3 m:49 5 m:80		1 m:18 3 m:49 5 m:80	

*1: Refer to Ending Page 1 for detailed switch specifications and dimensions.
*2: Switches other than the above models, such as switches with connectors, are also available. Refer to Ending Page 1.
*3: The max. load current is 20 mA at 25°C. The current is lower than 20 mA if the operating ambient temperature around the switch is higher than 25°C. (5 to 10 mA at 60°C)

Single acting spring load (SCPS3-M)

(Unit: N)

Bore size (mm)	At stroke of 0 mm	At full stroke operation
ø10	3.2	7.5
ø16	6.4	14.9

Cylinder weight

(Unit: g)

Type	Item / Bore size (mm)	Mounting bracket weight: Foot LS	Mounting bracket weight: Flange FA	Mounting bracket weight: Clevis CB	Product weight when at 0 mm stroke	Additional weight per 10 mm stroke	Switch weight (per switch)	Mounting bracket weight
SCPS3-M	ø10	6	4	4	20	4	Refer to the weight in the switch specifications.	2
	ø16	15	12	10	35	8		
SCPD3-M	ø10	6	4	4	21	2		
	ø16	15	12	10	42	3		

(Example) Product weight of SCPS3-ML-LS-10-30-T0H-D

- Mounting bracket weight (foot) ..... 6 g
- Product weight for 0 mm stroke .....20 g
- Additional weight for 30 mm stroke..... 4x30/10=12 g
- Switch weight ..... 2x(18+2)=40 g
- Product weight ..... 6+20+12+40=78 g

Theoretical thrust table

● SCPS3-M

(Unit: N)

Bore size (mm)	Working pressure MPa									
	0.15	0.2	0.3	0.4	0.5	0.6	0.7	0.8	0.9	1.0
ø10	7.01	9.34	17.2	25.0	32.9	40.8	48.6	56.5	64.3	72.2
ø16	21.5	28.7	48.8	68.9	89.0	1.09×10^2	1.29×10^2	1.49×10^2	1.69×10^2	1.90×10^2

● SCPD3-M

Bore size (mm)	Operating direction	Working pressure MPa										
		0.1	0.15	0.2	0.3	0.4	0.5	0.6	0.7	0.8	0.9	1.0
ø10	Push	7.85	11.8	15.7	23.6	31.4	39.3	47.1	55.0	62.8	70.7	78.5
	Pull	6.60	9.90	13.2	19.8	26.4	33.0	39.6	46.2	52.8	59.4	66.0
ø16	Push	20.1	30.2	40.2	60.3	80.4	1.01×10^2	1.21×10^2	1.41×10^2	1.61×10^2	1.81×10^2	2.01×10^2
	Pull	18.1	27.2	36.3	54.4	72.6	90.7	1.09×10^2	1.27×10^2	1.45×10^2	1.63×10^2	1.81×10^2

How to order

No switch (without magnet for switch)

SCPD3-M — LS - 10 - 15 - O ———— I

With switch (built-in magnet for switch)

SCPD3-ML - LS - 10 - 15 - O - T2H - R - I

Ⓐ Model No.
Ⓑ Mounting
Ⓒ Bore size
Ⓓ Stroke
Ⓔ Head side port direction *3
Ⓕ Switch model No. *2, *6
* indicates the lead wire length.
Ⓖ Switch quantity
Ⓗ Accessory *4

Code	Description
Ⓐ Model No.	
SCPS3-M	Single acting push/rotation-stop
SCPD3-M	Double acting/rotation-stop

Ⓑ Mounting	
00	Basic
LS	Axial foot (one side) (rod side)
FA	Rod side flange
CB	Clevis bracket (pin and snap ring included)

Ⓒ Bore size (mm)	
10	ø10
16	ø16

Ⓓ Stroke (mm)

Bore size	Stroke *1	Available Stroke	Custom stroke
ø10	**5 to 200 (120)**	**210(120)**	In 1 mm increments
ø16	**5 to 260 (120)**	**270(120)**	
* The value in ( ) is for SCPS3-M.			

Ⓔ Head side port direction	
Blank	Vertical
O	Axial direction

Ⓕ Switch model No.

Axial lead wire	Radial lead wire	Contact	Voltage AC	Voltage DC	Indicator	Lead wire
T0H*	**T0V***	Reed	●	●	1-color LED	2-wire
T5H*	**T5V***		●	●	No indicator lamp	
T2H*	**T2V***	Proximity		●	1-color LED	2-wire
T3H*	**T3V***			●		3-wire
T2WH*	**T2WV***			●	2-color LED	2-wire
T3WH*	**T3WV***			●		3-wire

*** Lead wire length**	
Blank	1 m (standard)
3	3 m (option)
5	5 m (option)

Ⓖ Switch quantity	
R	1 on rod side
H	1 on head side
D	2
T	3

Ⓗ Accessory	
I	Rod eye
Y	Rod clevis (pin and snap ring included)
B1	Eye bracket
B2	Clevis bracket

Precautions for model No. selection

*1 : Refer to page 56 for the min. stroke with switch.
*2 : Magnet is not built into the type without switch.
*3 : The "CB" mounting is not available when the port direction is "O" (axial direction).
*4 : "I" and "Y" cannot be selected together.
*5 : Copper and PTFE free as standard.
*6 : Switches are shipped with the product.

[Example of model No.]
SCPS3-ML-LS-10-15-O-T2H-R-I
Model: Pencil shaped cylinder rotation-stop

Ⓐ Model No.	: Single acting/push rotation-stop
Ⓑ Mounting	: Axial foot (single) (rod side)
Ⓒ Bore size	: ø10 mm
Ⓓ Stroke	: 15 mm
Ⓔ Head side port direction	: Axial direction
Ⓕ Switch model No.	: Proximity switch T2H, lead wire 1 m
Ⓖ Switch quantity	: 1 on rod side
Ⓗ Accessory	: Rod eye

How to order mounting bracket

Bore size (mm) / Mounting bracket	ø10	ø16
Foot (LS)	P2-LS-10M	P2-LS-16M
Flange (FA)	P2-FA-10M	P2-FA-16M

Note: The foot (LS) mounting bracket is provided as 1 pc./set.

How to order switch

● Switch body + mounting bracket set

SCPD3 - T0H - 6

Bore size (Item Ⓒ on page 58)

Switch model No. (Item Ⓕ on page 58)

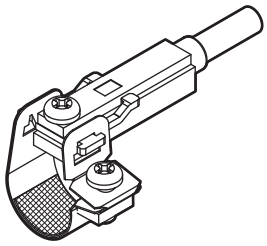

● Switch body (with fixing bracket)

SCPD3 - T0H

Switch model No. (Item Ⓕ on page 58)

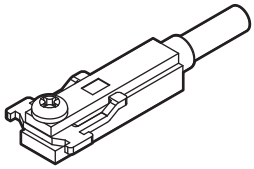

Note) The fixing bracket and cross-recessed pan head machine screw are different from those for the T standard switch.

● Mounting bracket set + fixing bracket

SCPD3 - TS - 6

Bore size (Item Ⓒ on page 58)

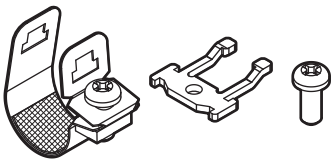

When 20 pcs or more are ordered, they will be packed together.

● Mounting bracket set

SCPD3 - T - 6

Bore size (Item Ⓒ on page 58)

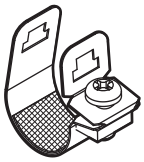

When 20 pcs or more are ordered, they will be packed together.

Internal structure and parts list

● Single acting/rotation-stop
SCPS3-M
SCPS3-ML (with switch)

Cannot be disassembled

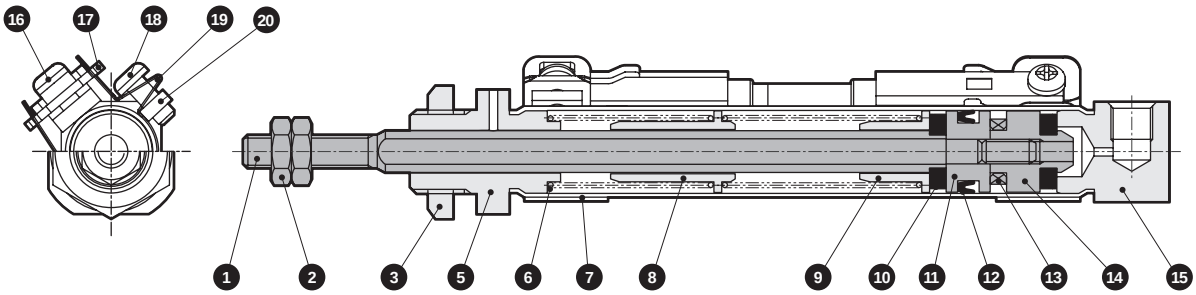

● Double acting/rotation-stop
SCPD3-M
SCPD3-ML (with switch)

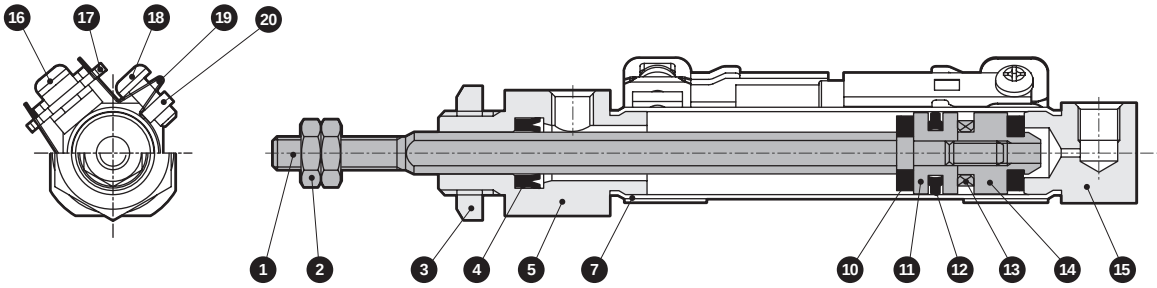

● This product cannot be disassembled.

No.	Part name	Material	Remarks	No.	Part name	Material	Remarks
1	Piston rod	Stainless steel		11	Piston	Aluminum alloy	
2	Rod nut	Steel	Nickeling	12	Piston packing	Nitrile rubber	
3	Hexagon nut	Steel	Nickeling	13	Magnet	-	With switch only
4	Rod packing	Nitrile rubber		14	Spacer	Aluminum alloy	
5	Rod cover	Aluminum alloy	Hard alumite	15	Head cover	Aluminum alloy	Hard alumite
6	Coil spring	Piano wire	Zinc chromate	16	Phillips pan head machine screw	Stainless steel	With switch only
7	Cylinder tube	Stainless steel		17	Fixing bracket	Stainless steel	With switch only
8	Spring holder (A)	Aluminum alloy		18	Phillips pan head machine screw	Stainless steel	With switch only
9	Spring holder (B)	Aluminum alloy		19	Band	Stainless steel	With switch only
10	Cushion rubber	Urethane rubber		20	Fixing nut	Stainless steel	With switch only

Dimensions

● SCPS3-M (L) Basic (00)

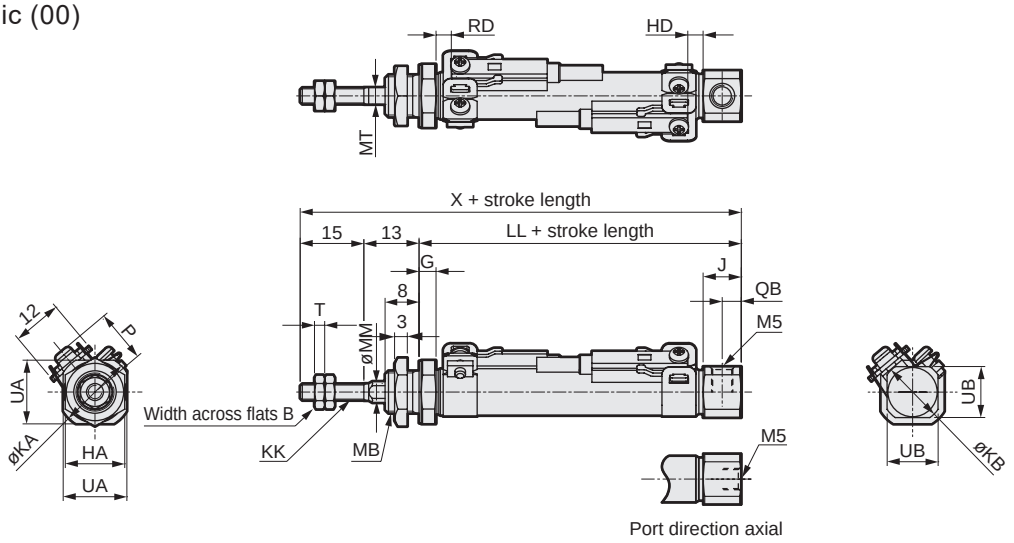

*1 : The dimensions are the same in the type without switch. (Magnet is not built in.)
*2 : As the thread depth of ø10 port is 3.8 mm, use a fitting with 3.8 mm or less thread length if necessary.
*3 : For the dimensions of the accessories, refer to page 15.

Code	Basic (00) Basic dimensions																								
Bore size (mm)	B	G	HA	J	KA	KB	KK	LL 15 or less	LL Over 15 to 30	LL Over 30 to 45	LL Over 45 to 60	LL Over 60 to 75	LL Over 75 to 90	LL Over 90 to 105	LL Over 105 to 120	MB	MM	MT	QB	T	UA	UB	X 15 or less	X Over 15 to 30	X Over 30 to 45
ø10	7	4	14	9	17.5	14.5	M4	47	52	62	67	77	82	92	97	M10x1.0	5	4	4.5	2.4	15	12	75	80	90
ø16	8	4	17	9	21.5	21.5	M5	47	52	62	67	77	82	92	97	M12x1.0	6	5	4.5	3.2	18	18	75	80	90

Code						With switch																		
Bore size (mm)	X Over 45 to 60	X Over 60 to 75	X Over 75 to 90	X Over 90 to 105	X Over 105 to 120	T0, T5, T2, T3 RD 15 or less	T0, T5, T2, T3 RD Over 15 to 30	T0, T5, T2, T3 RD Over 30 to 45	T0, T5, T2, T3 RD Over 45 to 60	T0, T5, T2, T3 RD Over 60 to 75	T0, T5, T2, T3 RD Over 75 to 90	T0, T5, T2, T3 RD Over 90 to 105	T0, T5, T2, T3 RD Over 105 to 120	T0, T5, T2, T3 HD	T2W, T3W RD 15 or less	T2W, T3W RD Over 15 to 30	T2W, T3W RD Over 30 to 45	T2W, T3W RD Over 45 to 60	T2W, T3W RD Over 60 to 75	T2W, T3W RD Over 75 to 90	T2W, T3W RD Over 90 to 105	T2W, T3W RD Over 105 to 120	T2W, T3W HD	P
ø10	95	105	110	120	125	13.5	18.5	28.5	33.5	43.5	48.5	58.5	63.5	2.5	15	20	30	35	45	50	60	65	4	13.5
ø16	95	105	110	120	125	11.5	16.5	26.5	31.5	41.5	46.5	56.5	61.5	3.5	13.5	18.5	28.5	33.5	43.5	48.5	58.5	63.5	5	17.0

● Axial foot (one side) (LS)

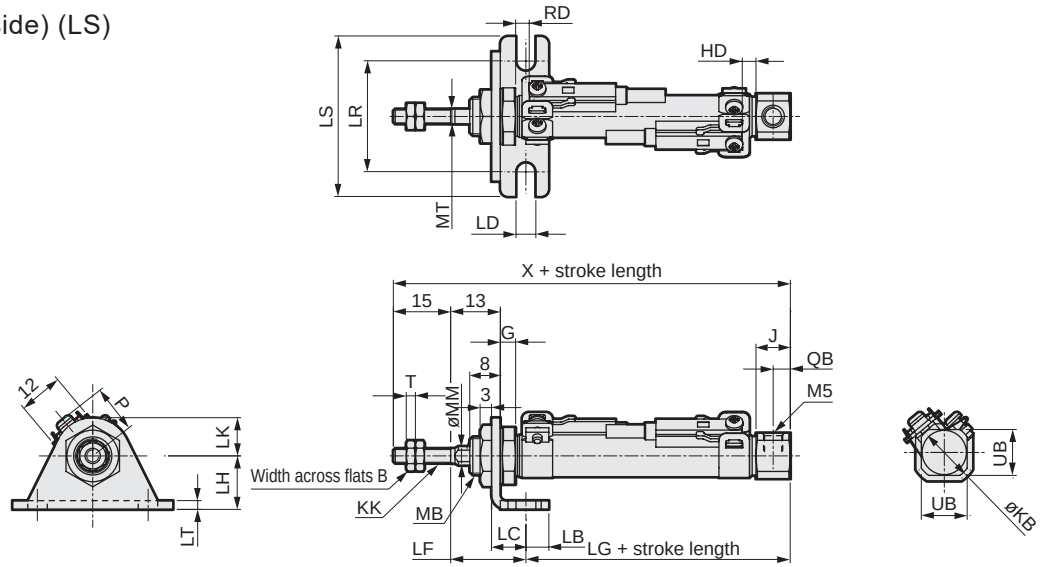

*1 : The dimensions are the same in the type without switch. (Magnet is not built in.)
*2 : As the thread depth of ø10 port is 3.8 mm, use a fitting with 3.8 mm or less thread length if necessary.
*3 : For the dimensions of the accessories, refer to page 15.

Code	Axial direction (LS) Basic dimensions																				Mounting dimensions							
Bore size (mm)	B	G	J	KB	KK	MB	MM	MT	QB	T	UB	X 15 or less	X Over 15 to 30	X Over 30 to 45	X Over 45 to 60	X Over 60 to 75	X Over 75 to 90	X Over 90 to 105	X Over 105 to 120	LB	LC	LD	LF	LG 15 or less	LG Over 15 to 30	LG Over 30 to 45	LG Over 45 to 60
ø10	7	4	9	14.5	M4	M10x1.0	5	4	4.5	2.4	12	75	80	90	95	105	110	120	125	6	9	5.2	19.7	40.3	45.3	55.3	60.3
ø16	8	4	9	21.5	M5	M12x1.0	6	5	4.5	3.2	18	75	80	90	95	105	110	120	125	6	9	5.2	19.7	40.3	45.3	55.3	60.3

Code									With switch																			
Bore size (mm)	LG Over 60 to 75	LG Over 75 to 90	LG Over 90 to 105	LG Over 105 to 120	LH	LK	LR	LS	LT	T0, T5, T2, T3 RD 15 or less	T0, T5, T2, T3 RD Over 15 to 30	T0, T5, T2, T3 RD Over 30 to 45	T0, T5, T2, T3 RD Over 45 to 60	T0, T5, T2, T3 RD Over 60 to 75	T0, T5, T2, T3 RD Over 75 to 90	T0, T5, T2, T3 RD Over 90 to 105	T0, T5, T2, T3 RD Over 105 to 120	T0, T5, T2, T3 HD	T2W, T3W RD 15 or less	T2W, T3W RD Over 15 to 30	T2W, T3W RD Over 30 to 45	T2W, T3W RD Over 45 to 60	T2W, T3W RD Over 60 to 75	T2W, T3W RD Over 75 to 90	T2W, T3W RD Over 90 to 105	T2W, T3W RD Over 105 to 120	T2W, T3W HD	P
ø10	70.3	75.3	85.3	90.3	14	10	29	42	2.3	13.5	18.5	28.5	33.5	43.5	48.5	58.5	63.5	2.5	15	20	30	35	45	50	60	65	4	13.5
ø16	70.3	75.3	85.3	90.3	14	10	29	42	2.3	11.5	16.5	26.5	31.5	41.5	46.5	56.5	61.5	3.5	13.5	18.5	28.5	33.5	43.5	48.5	58.5	63.5	5	17.0

Dimensions

● Rod side flange (FA)

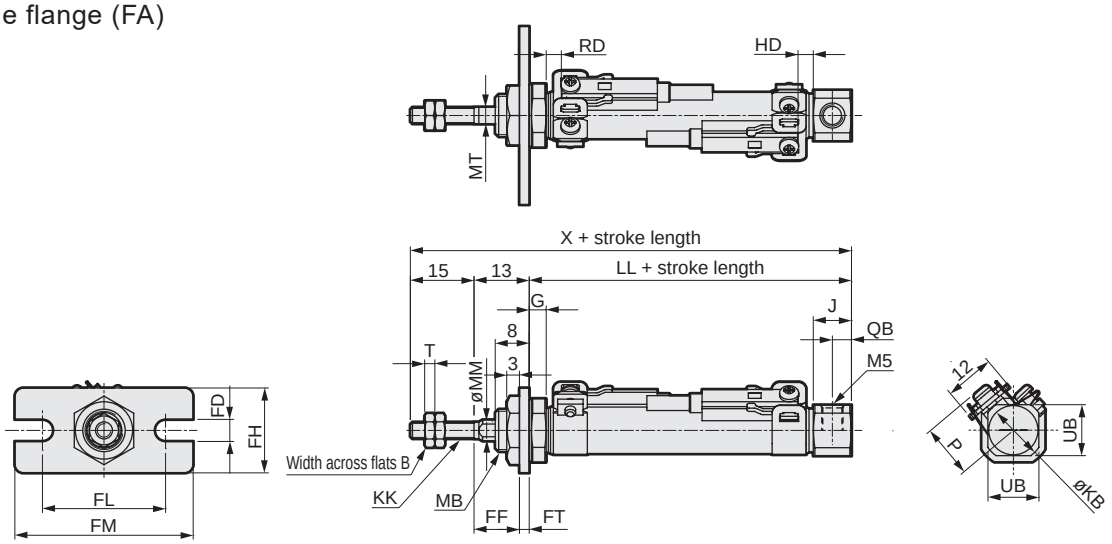

*1: The dimensions are the same in the type without switch. (Magnet is not built in.)
*2: As the thread depth of ø10 port is 3.8 mm, use a fitting with 3.8 mm or less thread length if necessary.
*3: For the dimensions of the accessories, refer to page 15.

Code / Bore size (mm)	Rod side flange (FA) Basic dimensions																							
	B	G	J	KB	KK	LL								MB	MM	MT	QB	T	UB	X					
						15 or less	Over 15 to 30	Over 30 to 45	Over 45 to 60	Over 60 to 75	Over 75 to 90	Over 90 to 105	Over 105 to 120							15 or less	Over 15 to 30	Over 30 to 45	Over 45 to 60	Over 60 to 75	Over 75 to 90
ø10	7	4	9	14.5	M4	47	52	62	67	77	82	92	97	M10x1.0	5	4	4.5	2.4	12	75	80	90	95	105	110
ø16	8	4	9	21.5	M5	47	52	62	67	77	82	92	97	M12x1.0	6	5	4.5	3.2	18	75	80	90	95	105	110

Code / Bore size (mm)	Mounting dimensions							With switch																			
	X		FD	FF	FH	FL	FM	FT	T0, T5, T2, T3									T2W, T3W									P
									RD								HD	RD								HD	
	Over 90 to 105	Over 105 to 120							15 or less	Over 15 to 30	Over 30 to 45	Over 45 to 60	Over 60 to 75	Over 75 to 90	Over 90 to 105	Over 105 to 120		15 or less	Over 15 to 30	Over 30 to 45	Over 45 to 60	Over 60 to 75	Over 75 to 90	Over 90 to 105	Over 105 to 120		
ø10	120	125	5.2	10.7	20	29	42	2.3	13.5	18.5	28.5	33.5	43.5	48.5	58.5	63.5	2.5	15	20	30	35	45	50	60	65	4	13.5
ø16	120	125	5.2	10.7	20	29	42	2.3	11.5	16.5	26.5	31.5	41.5	46.5	56.5	61.5	3.5	13.5	18.5	28.5	33.5	43.5	48.5	58.5	63.5	5	17.0

● Clevis bracket (CB) with pin

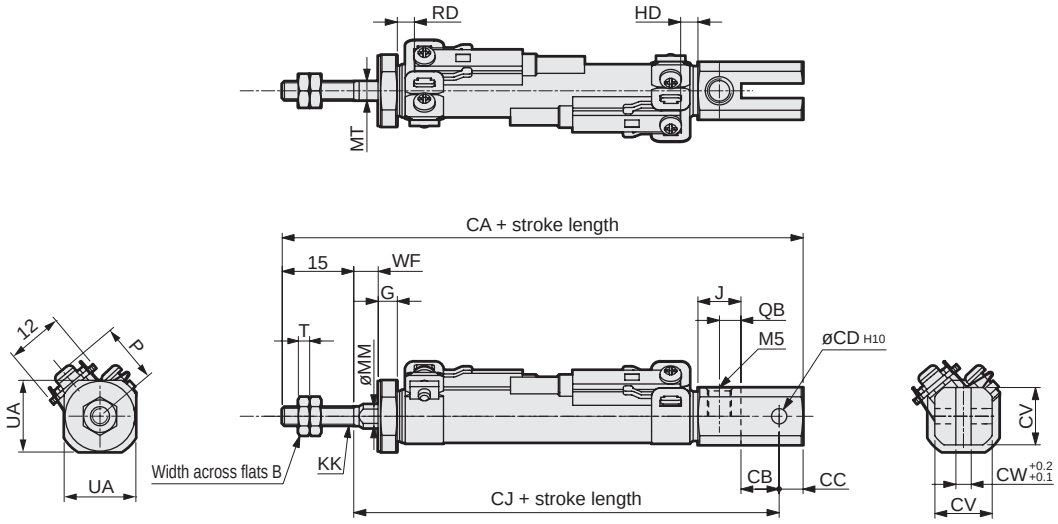

*1 : The dimensions are the same in the type without switch. (Magnet is not built in.)
*2 : As the thread depth of ø10 port is 3.8 mm, use a fitting with 3.8 mm or less thread length if necessary.
*3 : For the dimensions of the accessories, refer to page 15.

Code / Bore size (mm)	Clevis bracket (CB) Basic									Mounting dimensions																			
	B	G	J	KK	MM	MT	QB	T	UA	CA								CB	CC	CD	CJ								
										15 or less	Over 15 to 30	Over 30 to 45	Over 45 to 60	Over 60 to 75	Over 75 to 90	Over 90 to 105	Over 105 to 120				15 or less	Over 15 to 30	Over 30 to 45	Over 45 to 60	Over 60 to 75	Over 75 to 90	Over 90 to 105	Over 105 to 120
ø10	7	4	9	M4	5	4	4.5	2.4	12	80	92	104	116	128	140	152	164	8	5	3.2	60	72	84	96	108	120	132	144
ø16	8	4	9	M5	6	5	4.5	3.2	18	87	99	111	123	135	147	159	171	10	10	5	62	74	86	98	110	122	134	146

Code / Bore size (mm)											With switch																			
	CV	CW	WF								T0, T5, T2, T3										T2W, T3W									P
											RD								HD		RD								HD	
			15 or less	Over 15 to 30	Over 30 to 45	Over 45 to 60	Over 60 to 75	Over 75 to 90	Over 90 to 105	Over 105 to 120	15 or less	Over 15 to 30	Over 30 to 45	Over 45 to 60	Over 60 to 75	Over 75 to 90	Over 90 to 105	Over 105 to 120			15 or less	Over 15 to 30	Over 30 to 45	Over 45 to 60	Over 60 to 75	Over 75 to 90	Over 90 to 105	Over 105 to 120		
ø10	12	3.2	5	12	14	21	23	30	32	39	13.5	18.5	28.5	33.5	43.5	48.5	58.5	63.5	2.5	15	20	30	35	45	50	60	65	4	13.5
ø16	18	6.5	5	12	14	21	23	30	32	39	11.5	16.5	26.5	31.5	41.5	46.5	56.5	61.5	3.5	13.5	18.5	28.5	33.5	43.5	48.5	58.5	63.5	5	17.0

Dimensions

● SCPD3-M (L) Basic (00)

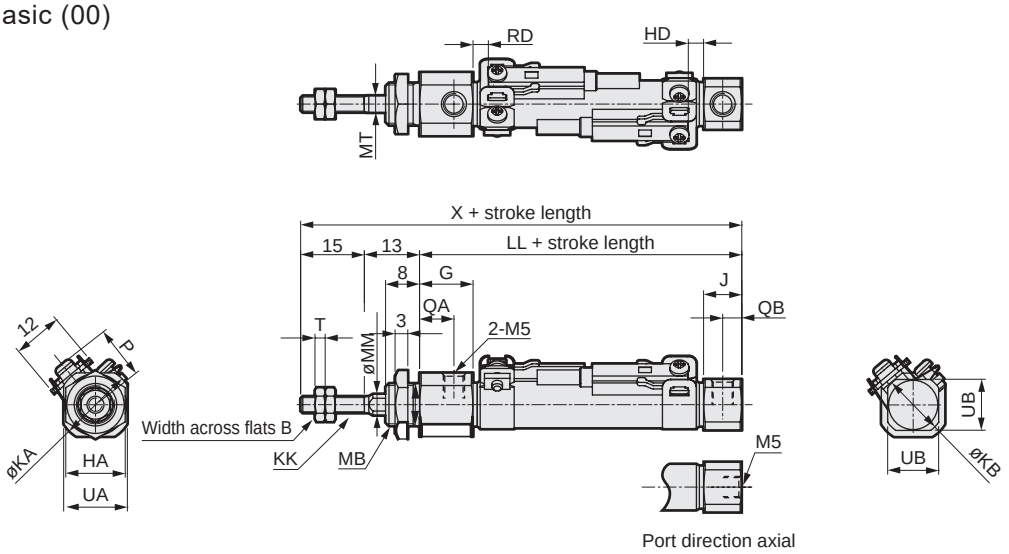

*1: For the dimensions of the accessories, refer to page 15.

Code	Basic (00) Basic dimensions													
Bore size (mm)	B	HA	G	J	KA	KB	KK	LL	MB	MM	MT	QA	QB	T
ø10	7	14	12.5	9	17.5	14.5	M4	46	M10x1.0	5	4	8	4.5	2.4
ø16	8	17	13.0	9	21.5	21.5	M5	46	M12x1.0	6	5	8.5	4.5	3.2

Code				With switch					
Bore size (mm)	UA	UB	X	T0, T5, T2, T3		T2W, T3W		P	
				RD	HD	RD	HD		
ø10	15	12	74	3.5	2.5	5.5	4	13.5	
ø16	18	18	74	2	3.5	3.5	5	17.0	

● Axial foot (one side) (LS)

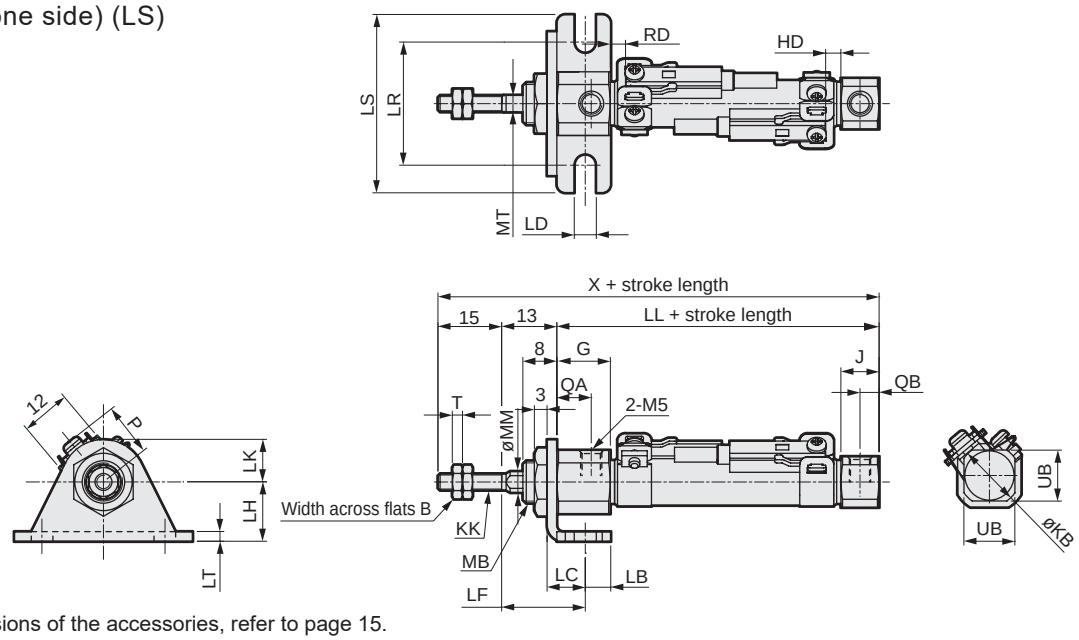

*1: For the dimensions of the accessories, refer to page 15.

Code	Axial foot (single) (LS) Basic dimensions													Mounting dimensions		
Bore size (mm)	B	G	J	KB	KK	MB	MM	MT	QA	QB	T	UB	X	LD	LH	LB
ø10	7	12.5	9	14.5	M4	M10x1.0	5	4	8	4.5	2.4	12	74	5.2	14	6
ø16	8	13.0	9	21.5	M5	M12x1.0	6	5	8.5	4.5	3.2	18	74	5.2	14	6

Code								With switch					
Bore size (mm)	LT	LC	LK	LR	LS	LF	LL	T0, T5, T2, T3		T2W, T3W		P	
								RD	HD	RD	HD		
ø10	2.3	9	10	29	42	19.7	46	3.5	2.5	5.5	4	13.5	
ø16	2.3	9	10	29	42	19.7	46	2	3.5	3.5	5	17.0	

Dimensions

● Rod side flange (FA)

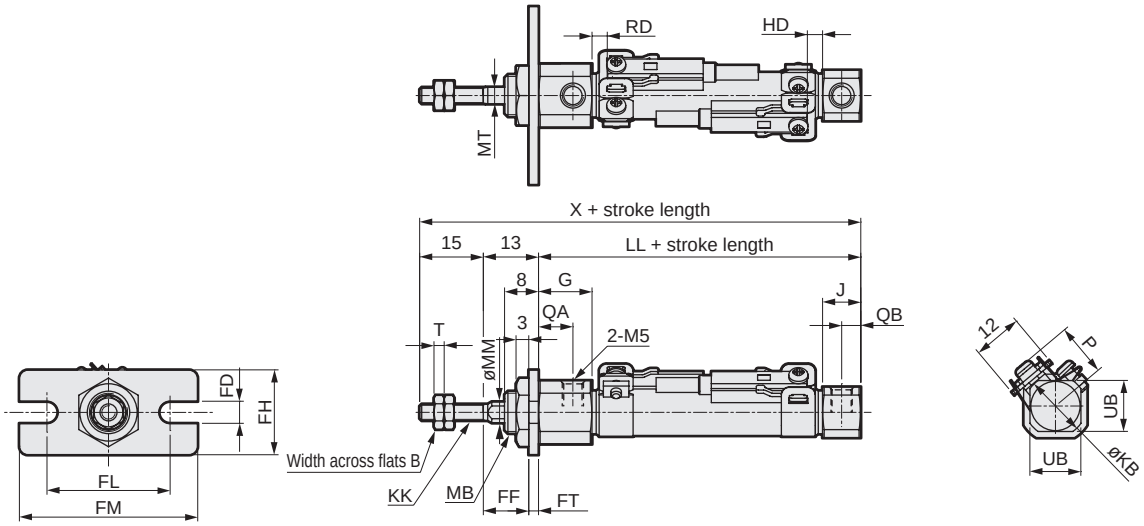

*1: For the dimensions of the accessories, refer to page 15.

Code	Rod side flange (FA) Basic dimensions													
Bore size (mm)	B	G	J	KB	KK	LL	MB	MM	MT	QA	QB	T	UB	X
ø10	7	12.5	9	14.5	M4	46	M10x1.0	5	4	8.0	4.5	2.4	12	74
ø16	8	13.0	9	21.5	M5	46	M12x1.0	6	5	8.5	4.5	3.2	18	74

Code	Mounting dimensions						With switch					
Bore size (mm)	FH	FD	FT	FL	FM	FF	T0, T5, T2, T3		T2W, T3W		P	
							RD	HD	RD	HD		
ø10	20	5.2	2.3	29	42	10.7	3.5	2.5	5.5	4	13.5	
ø16	20	5.2	2.3	29	42	10.7	2	3.5	3.5	5	17.0	

● Clevis bracket (CB) with pin

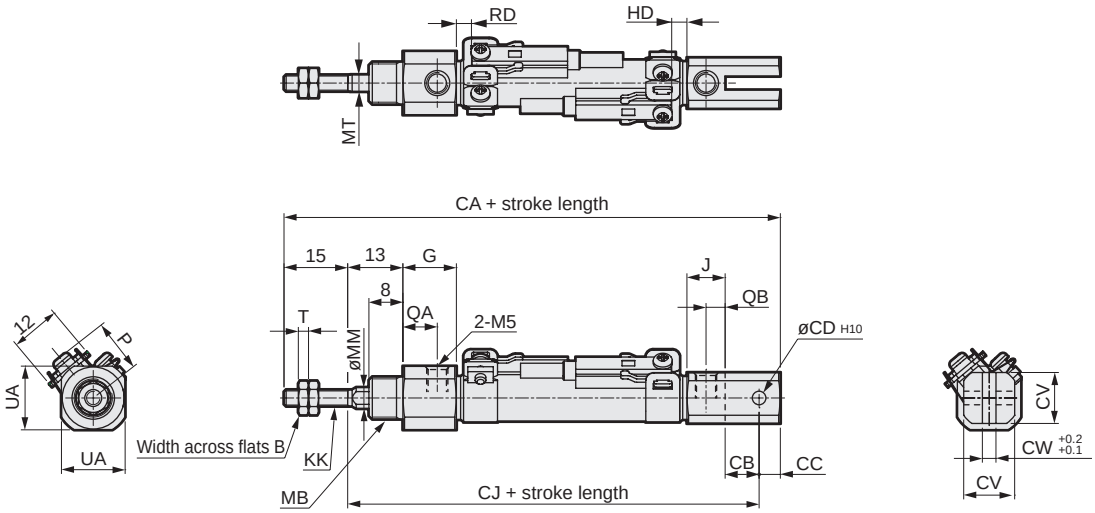

*1: For the dimensions of the accessories, refer to page 15.

Code	Clevis bracket (CB) Basic dimensions												Mounting dimensions	
Bore size (mm)	B	G	J	KK	MM	MB	MT	QA	QB	T	UA	CV	CW	CD
ø10	7	12.5	9	M4	5	M10x1.0	4	8	4.5	2.4	15	12	3.2	3.2
ø16	8	13.0	9	M5	6	M12x1.0	5	8.5	4.5	3.2	18	18	6.5	5

Code					With switch					
Bore size (mm)	CB	CC	CJ	CA	T0, T5, T2, T3		T2W, T3W		P	
					RD	HD	RD	HD		
ø10	8	5	67	87	3.5	2.5	5.5	4	13.5	
ø16	10	10	69	94	2	3.5	3.5	5	17.0	

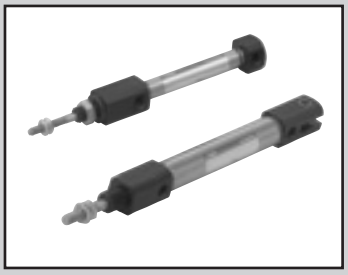

Pencil shaped cylinder double acting/high load

SCPD3-K Series

- Port size: M5
- Bore size: ø6/ø10/ø16

JIS symbol

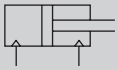

Made to order

RoHS CAD

Specifications

1 MPa = 10 bar

Item	SCPD3-K SCPD3-KL		
Bore size mm	ø6	ø10	ø16
Actuation	Double acting/high load		
Working fluid	Compressed air		
Max. working pressure MPa	1.0 (≈150 psi, 10 bar)		
Min. working pressure MPa	0.15 (≈22 psi)	0.1 (≈15 psi, 1 bar)	
Proof pressure MPa	1.6 (≈230 psi, 16 bar)		
Ambient temperature °C	-10 (14°F) to 60 (140°F) (no freezing)		
Port size	M5		
Stroke tolerance mm	+1.0 0		
Working piston speed mm/s	50 to 750		
Cushion	Rubber cushion		
Lubrication	Not required (use turbine oil ISO VG32 if necessary for lubrication)		
Allowable absorbed energy J	0.012	0.041	0.162

Stroke

Bore size (mm)	Standard stroke (mm)	Max. stroke (mm)	Min. stroke (mm)
ø6	15/30/45/60	100	5
ø10		200	
ø16		260	

*1: The custom stroke is available in 1 mm increments.

Min. stroke with switch

	1		2	
Sketch	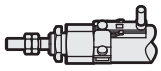 Rod side installation	Head side installation	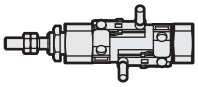 Different surface mounting	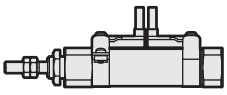 Same surface mounting
Min. stroke	5 mm		10 mm	28 mm

	3	
Sketch	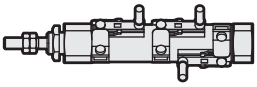 Different surface mounting	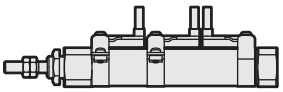 Same surface mounting
Min. stroke	38 mm	54 mm

Switch specifications

Item	2-wire proximity		3-wire proximity	
	T2H/T2V	T2WH/T2WV	T3H/T3V	T3WH/T3WV
Applications	Dedicated for programmable controller		For programmable controller, relay	
Output method	-		NPN output	
Power supply voltage	-		10 to 28 VDC	
Load voltage	10 to 30 VDC	24 VDC ±10%	30 VDC or less	
Load current	5 to 20 mA (*3)		100 mA or less	50 mA or less
Indicator	LED (Lit when ON)	Red/green LED (Lit when ON)	LED (Lit when ON)	Red/green LED (Lit when ON)
Leakage current	1 mA or less		10 μA or less	
Weight g	1 m:18 3 m:49 5 m:80		1 m:18 3 m:49 5 m:80	

Item	2-wire reed			
	T0H/T0V		T5H/T5V	
Applications	For programmable controller, relay		For programmable controller, relay, IC circuit (without indicator lamp), serial connection	
Load voltage	12/24 VDC	110 VAC	5/12/24 VDC	110 VAC
Load current	5 to 50 mA	7 to 20 mA	50 mA or less	20 mA or less
Indicator	LED (Lit when ON)		No indicator lamp	
Leakage current	0 mA		0 mA	
Weight g	1 m:18 3 m:49 5 m:80		1 m:18 3 m:49 5 m:80	

*1: Refer to Ending Page 1 for detailed switch specifications and dimensions.
*2: Switches other than the above models, such as switches with connectors, are also available. Refer to Ending Page 1.
*3: The max. load current is 20 mA at 25°C. The current is lower than 20 mA if the operating ambient temperature around the switch is higher than 25˚C. (5 to 10 mA at 60°C)

Cylinder weight

[Unit: g]

Type	Stroke / Bore size (mm)	No switch				With switch (2 switches)				Switch mounting bracket	Switch weight (per switch)
		15st	30st	45st	60st	15st	30st	45st	60st		
SCPD3-K	ø6	15	17	19	21	65	67	69	71	2	Refer to the weight in the switch specifications.
	ø10	27	30	33	36	80	83	86	89		
	ø16	64	69	74	79	118	123	128	133		

Mounting bracket weight

(Unit: g)

Applicable bore size	Mounting		
	Foot LS	Flange FA	Clevis CB
ø6	6	4	-
ø10	6	4	4
ø16	15	12	10

Allowable lateral load

[Unit: g]

Type	Bore size (mm)	Stroke			
		15st	30st	45st	60st
SCPD3-K	ø6	132	109	93	81
	ø10	338	277	234	203
	ø16	861	705	597	518

Theoretical thrust table

(Unit: N)

Bore size (mm)	Operating direction	Working pressure MPa										
		0.1	0.15	0.2	0.3	0.4	0.5	0.6	0.7	0.8	0.9	1.0
ø6	Push	-	4.24	5.65	8.48	11.3	14.1	17.0	19.8	22.6	25.4	28.3
	Pull	-	3.18	4.24	6.36	8.48	10.6	12.7	14.8	17.0	19.1	21.2
ø10	Push	7.85	11.8	15.7	23.6	31.4	39.3	47.1	55.0	62.8	70.7	78.5
	Pull	6.60	9.90	13.2	19.8	26.4	33.0	39.6	46.2	52.8	59.4	66.0
ø16	Push	20.1	30.2	40.2	60.3	80.4	1.01×10^2	1.21×10^2	1.41×10^2	1.61×10^2	1.81×10^2	2.01×10^2
	Pull	18.1	27.2	36.3	54.4	72.6	90.7	1.09×10^2	1.27×10^2	1.45×10^2	1.63×10^2	1.81×10^2

How to order

No switch (without magnet for switch)

SCPD3-K — 00 - 10 - 15 - O ———— I

With switch (built-in magnet for switch)

SCPD3-KL - 00 - 10 - 15 - O - T2H - R - I

Model No.

Ⓐ Mounting *1

Ⓑ Bore size

Ⓒ Standard stroke

Ⓓ Head side port direction *1

Ⓔ Switch model No.

Ⓕ Switch quantity

Ⓖ Accessory *3

Code	Description			
Ⓐ Mounting				
Bore size (ø)		**6**	**10**	**16**
00	Basic	●	●	●
LS	Axial foot (one side) (rod side)	●	●	●
FA	Rod side flange	●	●	●
CB	Clevis bracket (pin and snap ring incl.)		●	●

Ⓑ Bore size (mm)	
6	ø6
10	ø10
16	ø16

Ⓒ Standard stroke (mm)		
Bore size	**Stroke *2**	**Custom stroke**
ø6	**5 to 100**	**In 1 mm increments**
ø10	**5 to 200**	
ø16	**5 to 260**	

Ⓓ Head side port direction	
Blank	Vertical
O	Axial direction

Ⓔ Switch model No.							
Axial lead wire	**Radial lead wire**	**Contact**	**Voltage AC**	**Voltage DC**	**Indicator**	**Lead wire**	
T0H*	**T0V***	Reed	●	●	1-color LED	2-wire	
T5H*	**T5V***	Reed	●	●	No indicator lamp	2-wire	
T2H*	**T2V***	Proximity		●	1-color LED	2-wire	
T3H*	**T3V***	Proximity		●	1-color LED	3-wire	
T2WH*	**T2WV***	Proximity		●	2-color LED	2-wire	
T3WH*	**T3WV***	Proximity		●	2-color LED	3-wire	

*** Lead wire length**	
Blank	1 m (standard)
3	3 m (option)
5	5 m (option)

Ⓕ Switch quantity	
R	1 on rod side
H	1 on head side
D	2
T	3

Ⓖ Accessory				
Bore size (ø)		**6**	**10**	**16**
I	Rod eye		●	●
Y	Rod clevis (pin/snap ring included)		●	●
B1	Eye bracket		●	●
B2	Clevis bracket		●	●

⚠ Precautions for model No. selection

*1 : The "CB" mounting is not available when the port direction is "0" (axial direction).
*2 : Refer to page 64 for the min. stroke with switch.
*3 : "I" and "Y" cannot be selected together.
*4 : For the OO, LS and FA mounting, the head cover port direction can be selected from two options: perpendicular and horizontal to the axial direction.*5 : For ø6, the port size M3 is also available.
*6 : Refer to Ending Page 85 for custom specifications of rod end form.
*7 : Refer to page 6 for combination of variations/options.

[Example of model No.]

SCPD3-K-00-10-15-O-T2H-R-I

Model: Pencil shaped cylinder double acting/high load

Ⓐ Mounting	: Basic
Ⓑ Bore size	: ø10 mm
Ⓒ Standard stroke	: 15 mm
Ⓓ Head side port direction	: Axial direction
Ⓔ Switch model No.	: Proximity switch T2H
Ⓕ Switch quantity	: 1 on rod side
Ⓖ Accessory	: Rod eye

How to order switch

● Switch body + mounting bracket set

SCPD3 - T0H - 6

Bore size (Item Ⓑ on page 66)

Switch model No. (Item Ⓔ on page 66)

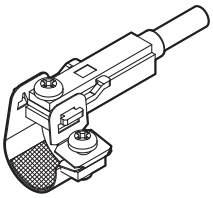

● Switch body (with fixing bracket)

SCPD3 - T0H

Switch model No. (Item Ⓔ on page 66)

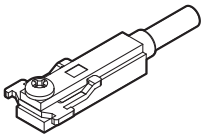

Note) The fixing bracket and cross-recessed pan head machine screw are different from those for the T standard switch.

● Mounting bracket set + fixing bracket

SCPD3 - TS - 6

Bore size (Item Ⓑ on page 66)

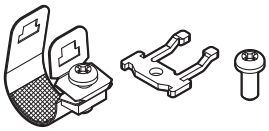

When 20 pcs or more are ordered, they will be packed together.

● Mounting bracket set

SCPD3 - T - 6

Bore size (Item Ⓑ on page 66)

When 20 pcs or more are ordered, they will be packed together.

How to order mounting bracket

Bore size / Mounting bracket	ø6	ø10	ø16
Foot (LS)	P2-LS-6	P2-LS-10	P2-LS-16
Flange (FA)	P2-FA-6	P2-FA-10	P2-FA-16

Note: The foot (LS) mounting bracket is provided as 1 pc./set.

Internal structure and parts list

● SCPD3-K(ø6)

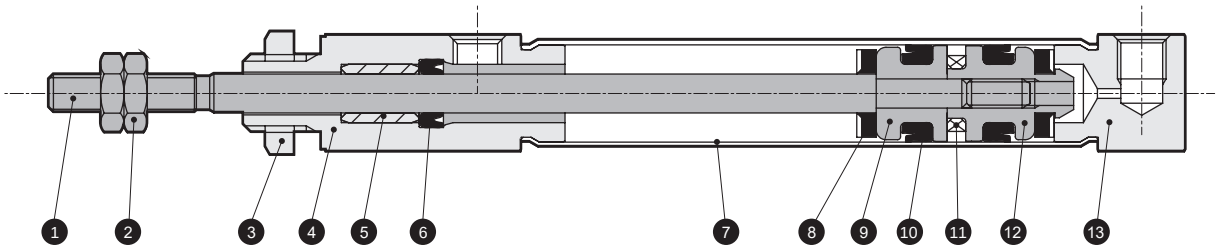

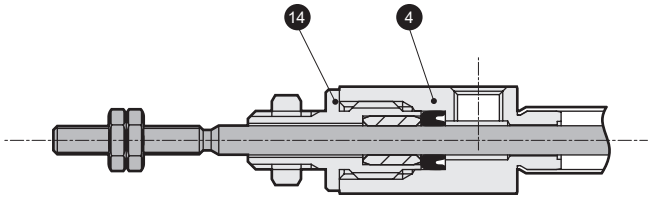

For ø6

Cannot be disassembled

* This product is a caulked and cannot be disassembled.

No.	Part name	Material	Remarks	No.	Part name	Material	Remarks
1	Piston rod	Stainless steel		8	Cushion rubber	Urethane rubber	
2	Rod nut	Steel	Nickeling	9	Piston (R)	Aluminum alloy	Chromate
3	Hexagon nut	Steel	Nickeling	10	Piston packing	Nitrile rubber	
4	Rod cover	Aluminum alloy	Hard alumite	11	Magnet	-	With switch only
5	Bush	Dry bearing		12	Piston (H)	Aluminum alloy	Chromate
6	Rod packing	Nitrile rubber		13	Head cover	Aluminum alloy	Hard alumite
7	Cylinder tube	Stainless steel		14	Rod metal	Aluminum alloy	Hard alumite

SCP*3
CMK2
CMA2
SCM
SCG
SCA2
SCS2
CKV2
CAV2/ COVP/N2
SSD2
SSG
SSD
CAT
MDC2
MVC
SMG
MSD/ MSDG
FC*
STK
SRL3
SRG3
SRM3
SRT3
MRL2
MRG2
SM-25
ShkAbs
FJ
FK
Spd Contr
Ending

Dimensions

● Basic (00)

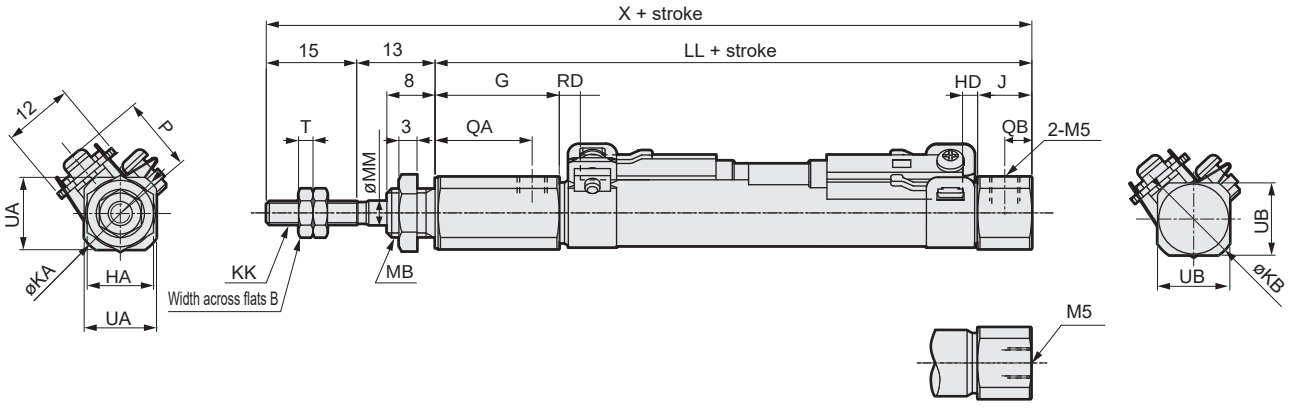

*1 : Dimensions shown in ( ) are for when the head side port direction is "0" (axial direction).
*2 : For the dimensions of the accessories, refer to page 15.

Code	Basic (00) Basic dimensions															
Bore size (mm)	B	G	HA	J	KA	KB	KK	LL	MB	MM	QA	QB	T	UA	UB	X
ø6	5.5	20	8	8	13.5	13.5	M3	55	M6	3	16	4	1.8	11	11(8)	83
ø10	7	20.5	11	9	14.5	14.5	M4	59	M8x1.0	4	16	4.5	2.4	12	12	87
ø16	8	21	14	9	21.5	21.5	M5	62	M10x1.0	5	16.5	4.5	3.2	18	18	90

Code	With switch				
	T0, T5, T2, T3		T2W, T3W		P
Bore size (mm)	RD	HD	RD	HD	
ø6	2	2	4	3.5	11.5
ø10	3.5	2.5	5.5	4	13.5
ø16	2	3.5	3.5	5	17

● Axial foot (one side) (LS)

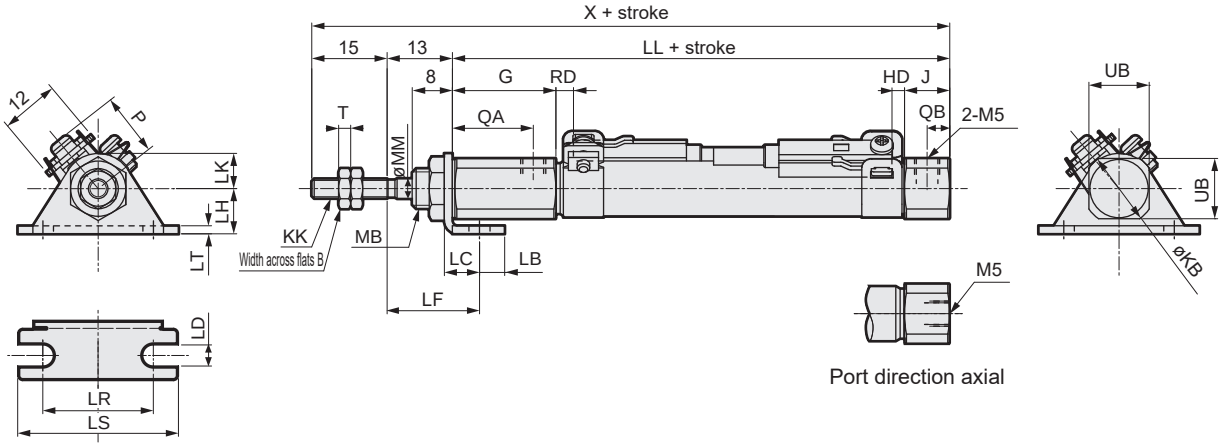

*1: For the dimensions of the accessories, refer to page 15.

Code	Axial foot (single) (LS) Basic dimensions													Mounting dimensions		
Bore size (mm)	B	G	J	KB	KK	LL	MB	MM	QA	QB	T	UB	X	LB	LC	LD
ø6	5.5	20	8	13.5	M3	55	M6	3	16	4	1.8	11(8)	83	5	7	4.2
ø10	7	20.5	9	14.5	M4	59	M8x1.0	4	16	4.5	2.4	12	87	5	7	4.2
ø16	8	21	9	21.5	M5	62	M10x1.0	5	16.5	4.5	3.2	18	90	6	9	5.2

Code							With switch					
							T0, T5, T2, T3		T2W, T3W		P	
Bore size (mm)	LF	LH	LK	LR	LS	LT	RD	HD	RD	HD		
ø6	18.4	9	7	22	32	1.6	2	2	4	3.5	11.5	
ø10	18.4	9	7	22	32	1.6	3.5	2.5	5.5	4	13.5	
ø16	19.7	14	10	29	42	2.3	2	3.5	3.5	5	17	

Dimensions

● Rod side flange (FA)

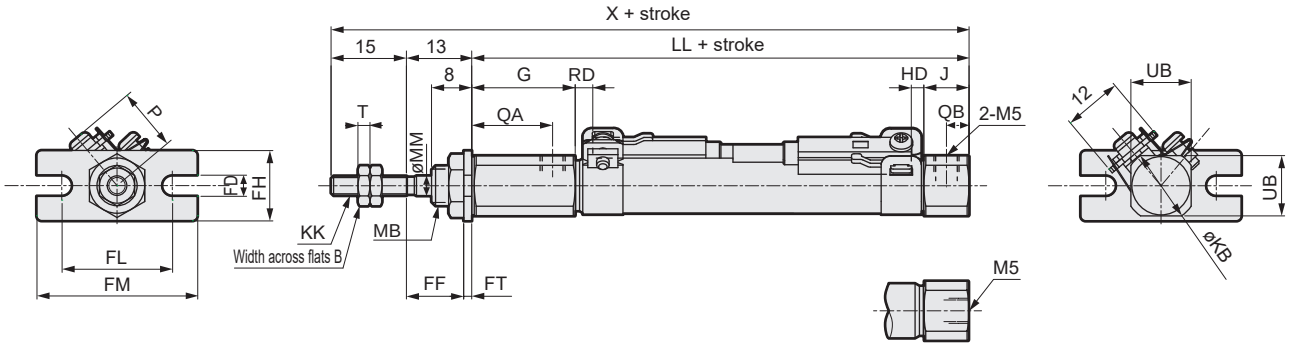

Port direction axial

*1: For the dimensions of the accessories, refer to page 15.

Code / Bore size (mm)	Rod side flange (FA) Basic dimensions													Mounting dimensions		
	B	G	J	KB	KK	LL	MB	MM	QA	QB	T	UB	X	FD	FF	FH
ø6	5.5	20	8	13.5	M3	55	M6	3	16	4	1.8	11(8)	83	4.2	11.4	14
ø10	7	20.5	9	14.5	M4	59	M8x1.0	4	16	4.5	2.4	12	87	4.2	11.4	14
ø16	8	21	9	21.5	M5	62	M10x1.0	5	16.5	4.5	3.2	18	90	5.2	10.7	20

Code / Bore size (mm)				With switch				
				T0, T5, T2, T3		T2W, T3W		
	FL	FM	FT	RD	HD	RD	HD	P
ø6	22	32	1.6	2	2	4	3.5	11.5
ø10	22	32	1.6	3.5	2.5	5.5	4	13.5
ø16	29	42	2.3	2	3.5	3.5	5	17

● Clevis bracket (CB)

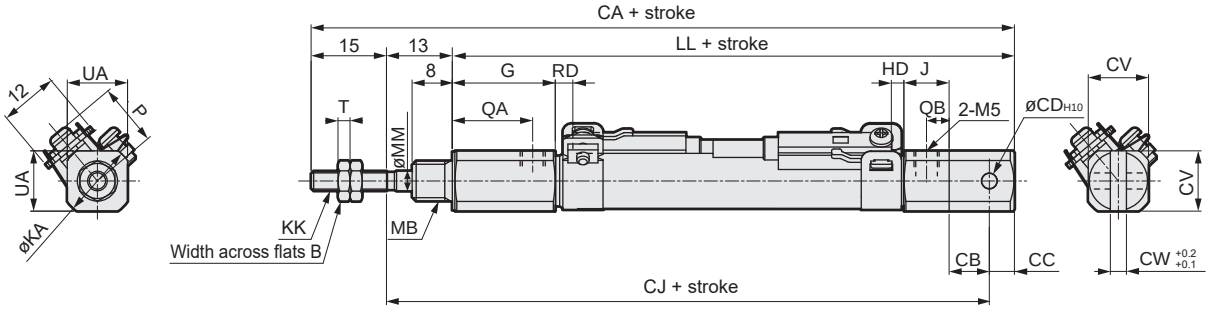

*1: For the dimensions of the accessories, refer to page 15.

Code / Bore size (mm)	Clevis bracket (CB) Basic dimensions											Mounting dimensions				
	B	G	J	KA	KK	MB	MM	QA	QB	T	UA	CA	CB	CC	CD	CJ
ø10	7	20.5	9	14.5	M4	M8x1.0	4	16	4.5	2.4	12	100	8	5	3.2	80
ø16	8	21	9	21.5	M5	M10x1.0	5	16.5	4.5	3.2	18	110	10	10	5	85

Code / Bore size (mm)			With switch				
			T0, T5, T2, T3		T2W, T3W		
	CV	CW	RD	HD	RD	HD	P
ø10	12	3.2	3.5	2.5	5.5	4	13.5
ø16	18	6.5	2	3.5	3.5	5	17

Pencil shaped cylinder single acting/with valve, double acting/with valve

SCPS3-V Series
SCPD3-V Series

● Bore size: ø10/ø16

Made to order

JIS symbol ● Single acting/ with valve

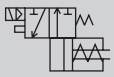

● Double acting/with valve

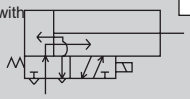

Specifications

Item		SCPS3-V SCPS3-VL		SCPD3-V SCPD3-VL	
Bore size	mm	ø10	ø16	ø10	ø16
Actuation		Single acting/with valve		Double acting/with valve	
Working fluid		Compressed air			
Max. working pressure	MPa	1 (≈150 psi, 10 bar)		0.7 (≈100 psi, 7 bar)	
Min. working pressure	MPa	0.15 (≈22 psi, 1.5 bar)			
Proof pressure	MPa	1.5 (≈220 psi, 15 bar)		1.05 (≈150 psi, 10.5 bar)	
Ambient temperature	°C	-10 (14°F) to 50 (122°F) (no freezing)			
Port size		M5			
Stroke tolerance	mm	$^{+1.0}_{0}$ (to 60), $^{+1.5}_{0}$ (61 to 120)		$^{+1.0}_{0}$ (to 120), $^{+1.5}_{0}$ (121 to 200: ø10, 121 to 260: ø16)	
Working piston speed	mm/s	50 to 750			
Cushion		Rubber cushion			
Lubrication		Not required (use turbine oil class 1 ISO VG32 if necessary for lubrication)			
Manual operating device		Non-locking push type			
Allowable absorbed energy	J	0.041	0.162	0.041	0.162
Solenoid valve specifications					
Applicable valve series		P5132(SCPS3-V, SCPS3-VL) P5142(SCPD3-V, SCPD3-VL)			
Rated voltage	V	AC100(50/60 Hz)	AC200(50/60 Hz)	DC24	
Starting current	A	0.056/0.044	0.034/0.026	0.075	
Holding current	A	0.028/0.022	0.017/0.013	0.075	
Power consumption	W	1.8/1.4	2.1/1.6	1.8	
Voltage fluctuation range		±10%			
Thermal class		Class B (molded coil)			
Temperature rise	°C	45			

Note: Refer to “Pneumatic Valves (No. CB-023SA)” for details on valves.

Stroke

Bore size (mm)			Standard stroke (mm)	Max. stroke (mm)	Min. stroke (mm)
SCPS3-V	Single acting	ø10	15/30/45/60	120	15
		ø16			
SCPD3-V	Double acting	ø10	15/30/45/60	200	
		ø16		260	

*1: The custom stroke is available in 1 mm increments.

Min. stroke with switch

	1		2	
Sketch	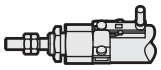 Rod side installation	Head side installation	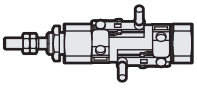 Different surface mounting	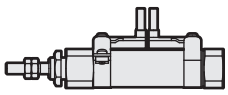 Same surface mounting
Min. stroke	5 mm		10 mm	28 mm

	3	
Sketch	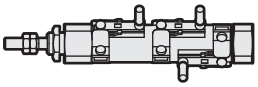 Different surface mounting	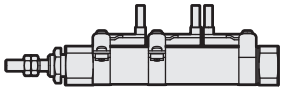 Same surface mounting
Min. stroke	38 mm	54 mm

Switch specifications

Item	2-wire proximity		3-wire proximity	
	T2H/T2V	T2WH/T2WV	T3H/T3V	T3WH/T3WV
Applications	Dedicated for programmable controller		For programmable controller, relay	
Output method	-		NPN output	
Power supply voltage	-		10 to 28 VDC	
Load voltage	10 to 30 VDC	24 VDC ±10%	30 VDC or less	
Load current	5 to 20 mA (*3)		100 mA or less	50 mA or less
Indicator	LED (Lit when ON)	Red/green LED (Lit when ON)	LED (Lit when ON)	Red/green LED (Lit when ON)
Leakage current	1 mA or less		10 μA or less	
Weight g	1 m:18 3 m:49 5 m:80		1 m:18 3 m:49 5 m:80	

Item	2-wire reed			
	T0H/T0V		T5H/T5V	
Applications	For programmable controller, relay		For programmable controller, relay, IC circuit (without indicator lamp), serial connection	
Load voltage	12/24 VDC	110 VAC	5/12/24 VDC	110 VAC
Load current	5 to 50 mA	7 to 20 mA	50 mA or less	20 mA or less
Indicator	LED (Lit when ON)		No indicator lamp	
Leakage current	0 mA		0 mA	
Weight g	1 m:18 3 m:49 5 m:80		1 m:18 3 m:49 5 m:80	

*1: Refer to Ending Page 1 for detailed switch specifications and dimensions.
*2: Switches other than the above models, such as switches with connectors, are also available. Refer to Ending Page 1.
*3: The max. load current is 20 mA at 25°C. The current is lower than 20 mA if the operating ambient temperature around the switch is higher than 25°C. (5 to 10 mA at 60°C)

Cylinder weight

(Unit: g)

Type	Stroke / Bore size (mm)	No switch 15st	30st	45st	60st	With switch (2 switches) 15st	30st	45st	60st	Switch mounting bracket weight	Switch weight (per switch)
SCPS3-V	ø10	89	96	103	110	139	146	153	160	2	Refer to the weight in the switch specifications.
	ø16	107	121	135	149	159	173	187	201		
SCPD3-V	ø10	131	134	138	142	181	184	188	192		
	ø16	151	156	161	166	203	208	213	218		

Mounting bracket weight

(Unit: g)

Applicable bore size	Mounting		
	Foot LS	Foot LB	Flange FA
ø10	6	12	4
ø16	15	30	12

Single acting spring load (SCPS3-V)

(Unit: N)

Bore size (mm)	At stroke of 0mm	At full stroke operation
ø10	3.2	7.5
ø16	6.4	14.9

Theoretical thrust table

● SCPS3-V

(Unit: N)

Bore size (mm)	Working pressure MPa									
	0.15	0.2	0.3	0.4	0.5	0.6	0.7	0.8	0.9	1.0
ø10	7.01	9.34	17.2	25.0	32.9	40.8	48.6	56.5	64.3	72.2
ø16	21.5	28.7	48.8	68.9	89.0	1.09×10^2	1.29×10^2	1.49×10^2	1.69×10^2	1.90×10^2

● SCPD3-V

(Unit: N)

Bore size (mm)	Operating direction	Working pressure MPa						
		0.15	0.2	0.3	0.4	0.5	0.6	0.7
ø10	Push	11.8	15.7	23.6	31.4	39.3	47.1	55.0
	Pull	9.90	13.2	19.8	26.4	33.0	39.6	46.2
ø16	Push	30.2	40.2	60.3	80.4	1.01×10^2	1.21×10^2	1.41×10^2
	Pull	27.2	36.3	54.4	72.6	90.7	1.09×10^2	1.27×10^2

How to order

No switch (without magnet for switch)

SCPD3-V — LS - 10 - 15 - 1 ——— ( ) I

With switch (built-in magnet for switch)

SCPD3-VL - LS - 10 - 15 - 1 - T2H - R - ( ) I

Ⓐ Model No.
Ⓑ Mounting
Ⓒ Bore size
Ⓓ Stroke
Ⓔ Valve voltage
Ⓕ Switch model No.
Ⓖ Switch quantity
Ⓗ Option
Ⓘ Accessory *3

Code	Description
Ⓐ Model No.	
SCPS3-V	Single acting push with valve
SCPD3-V	Double acting with valve

Ⓑ Mounting	
00	Basic
LS	Axial foot (one side)
LB	Two-sided axial foot *7
FA	Rod side flange

Ⓒ Bore size (mm)	
10	ø10
16	ø16

Ⓓ Stroke (mm)

Bore size	Stroke *1	Custom stroke
ø10	**15 to 200(120)**	**In 1 mm increments**
ø16	**15 to 260(120)**	

* The value in ( ) is for SCPS3-V.

Ⓔ Valve voltage	
1	100 VAC
2	200 VAC
3	24 VDC

Ⓕ Switch model No.

Axial lead wire	Radial lead wire	Contact	Voltage AC	Voltage DC	Indicator	Lead wire
T0H*	**T0V***	Reed	●	●	1-color LED	2-wire
T5H*	**T5V***		●	●	No indicator lamp	
T2H*	**T2V***	Proximity		●	1-color LED	2-wire
T3H*	**T3V***			●		3-wire
T2WH*	**T2WV***			●	2-color LED	2-wire
T3WH*	**T3WV***			●		3-wire

*** Lead wire length**	
Blank	1 m (standard)
3	3 m (option)
5	5 m (option)

Ⓖ Switch quantity	
R	1 on rod side
H	1 on head side
D	2

Ⓗ Option	
P6	Copper and PTFE free (made-to-order product)

Ⓘ Accessory	
I	Rod eye
Y	Rod clevis (pin and snap ring included)
B1	Eye bracket
B2	Clevis bracket

⚠ Precautions for model No. selection

*1 : Refer to page 70 for the min. stroke with switch.
*2 : Magnet is not built into the without switch.
*3 : "I" and "Y" cannot be selected together.
*4 : Refer to Ending Page 85 for custom specifications of rod end form.
*5 : Refer to page 6 for combination of variations/options.
*6 : For P6 (copper and PTFE free), check the delivery date as it is a made-to-order product.
*7 : Cannot be selected for single acting push (SCPS3).

[Example of model No.]

SCPD3-VL-LS-10-15-1-T2H-R-I

Model: Pencil shaped cylinder

Ⓐ Model No.	: Double acting/with valve and switch
Ⓑ Mounting	: Axial foot (single) (rod side)
Ⓒ Bore size	: ø10 mm
Ⓓ Stroke	: 15 mm
Ⓔ Valve voltage	: 100 VAC
Ⓕ Switch model No.	: Proximity switch T2H, lead wire 1 m
Ⓖ Switch quantity	: 1 on rod side
Ⓗ Option	: None
Ⓘ Accessory	: Rod eye

How to order mounting bracket

Bore size (mm) / Mounting bracket	ø10	ø16
Foot (LS)	P2-LS-10	P2-LS-16
Foot (LB)	P2-LB-10	P2-LB-16
Flange (FA)	P2-FA-10	P2-FA-16

Note: The foot (LS) mounting bracket is provided as 1 pc./set.

How to order switch

● Switch body + mounting bracket set

SCPD3 - T0H - 6

- T0H: Switch model No. (Item Ⓕ on page 72)
- 6: Bore size (Item Ⓒ on page 72)

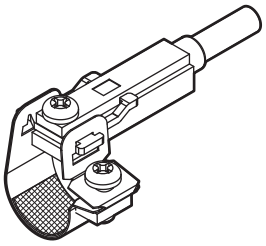

● Switch body (with fixing bracket)

SCPD3 - T0H

- T0H: Switch model No. (Item Ⓕ on page 72)

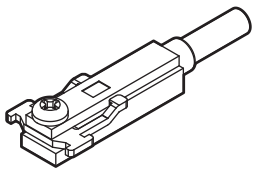

Note) The fixing bracket and cross-recessed pan head machine screw are different from those for the T type standard switch.

● Mounting bracket set + fixing bracket

SCPD3 - TS - 6

- 6: Bore size (Item Ⓒ on page 72)

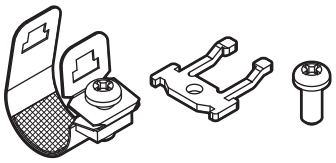

When 20 pcs or more are ordered, they will be packed together.

● Mounting bracket set

SCPD3 - T - 6

- 6: Bore size (Item Ⓒ on page 72)

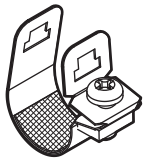

When 20 pcs or more are ordered, they will be packed together.

Internal structure and parts list (with switch)

● SCPS3-VL

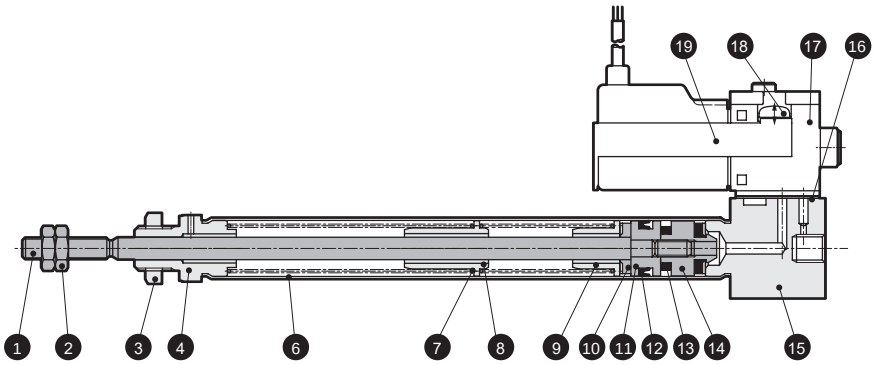

● SCPD3-VL

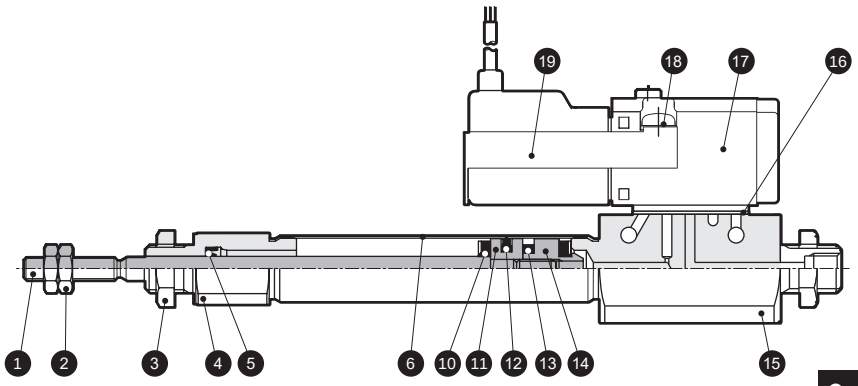

Cannot be disassembled

* This product is caulked and cannot be disassembled.

No.	Part name	Material	Remarks	No.	Part name	Material	Remarks
1	Piston rod	Stainless steel		11	Piston	Aluminum alloy	
2	Rod nut	Steel	Nickeling	12	Piston packing	Nitrile rubber	
3	Hexagon nut	Steel	Nickeling	13	Magnet	-	With switch only
4	Rod cover	Aluminum alloy	Hard alumite	14	Spacer	Aluminum alloy	
5	Rod packing	Nitrile rubber		15	Head cover	Aluminum alloy	Hard alumite
6	Cylinder tube	Stainless steel		16	Gasket	Nitrile rubber	
7	Spring	Piano wire	Zinc chromate	17	Solenoid valve	-	3-way valve - single acting, 4-way valve - double acting
8	Collar	Aluminum alloy		18	Pan head machine screw	Steel	Zinc chromate
9	Spring holder	Aluminum alloy		19	Shielding plate	Steel	With switch only
10	Cushion rubber	Urethane rubber					

Dimensions

● Basic (00)

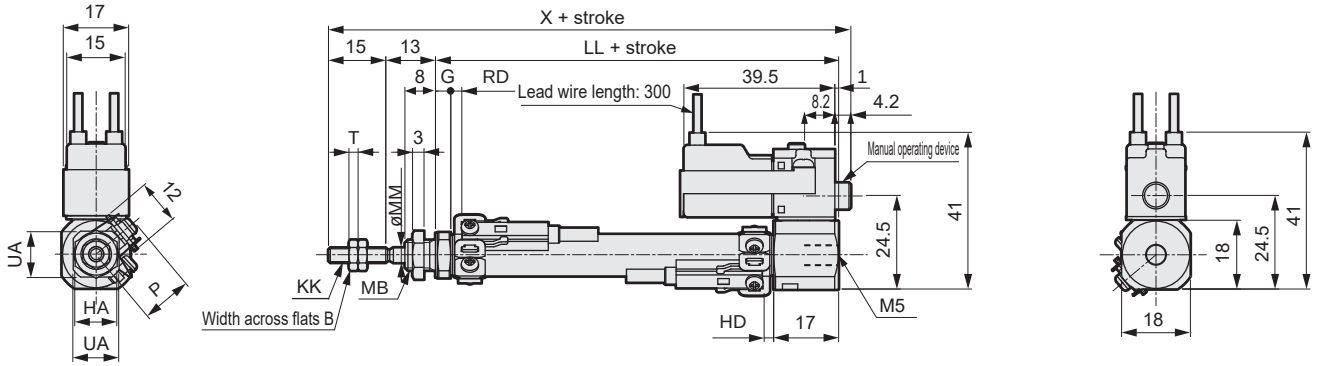

*1: For the dimensions of the accessories, refer to page 15.

Code / Bore size (mm)	Basic (00) Basic dimensions																							
	B	G	HA	KK	LL								MB	MM	T	UA	X							
					15 or less	16 ≤ 30	31 ≤ 45	46 ≤ 60	61 ≤ 75	76 ≤ 90	91 ≤ 105	106 ≤ 120					15 or less	16 ≤ 30	31 ≤ 45	46 ≤ 60	61 ≤ 75	76 ≤ 90	91 ≤ 105	106 ≤ 120
ø10	7	4	11	M4	55	60	70	75	85	90	100	105	M8x1.0	4	2.4	12	86.2	91.2	101.2	106.2	116.2	121.2	131.2	136.2
ø16	8	4	14	M5	55	60	70	75	85	90	100	105	M10x1.0	5	3.2	18	86.2	91.2	101.2	106.2	116.2	121.2	131.2	136.2

Code / Bore size (mm)	With switch																		
	T0, T5, T2, T3								HD	T2W, T3W							HD	P	
	RD									RD									
	15 or less	16 ≤ 30	31 ≤ 45	46 ≤ 60	61 ≤ 75	76 ≤ 90	91 ≤ 105	106 ≤ 120		15 or less	16 ≤ 30	31 ≤ 45	46 ≤ 60	61 ≤ 75	76 ≤ 90	91 ≤ 105	106 ≤ 120		
ø10	13.5	18.5	28.5	33.5	43.5	48.5	58.5	63.5	2.5	15	20	30	35	45	50	60	65	4	13.5
ø16	11.5	16.5	26.5	31.5	41.5	46.5	56.5	61.5	3.5	13.5	18.5	28.5	33.5	43.5	48.5	58.5	63.5	5	17

● Axial foot (one side) (LS)

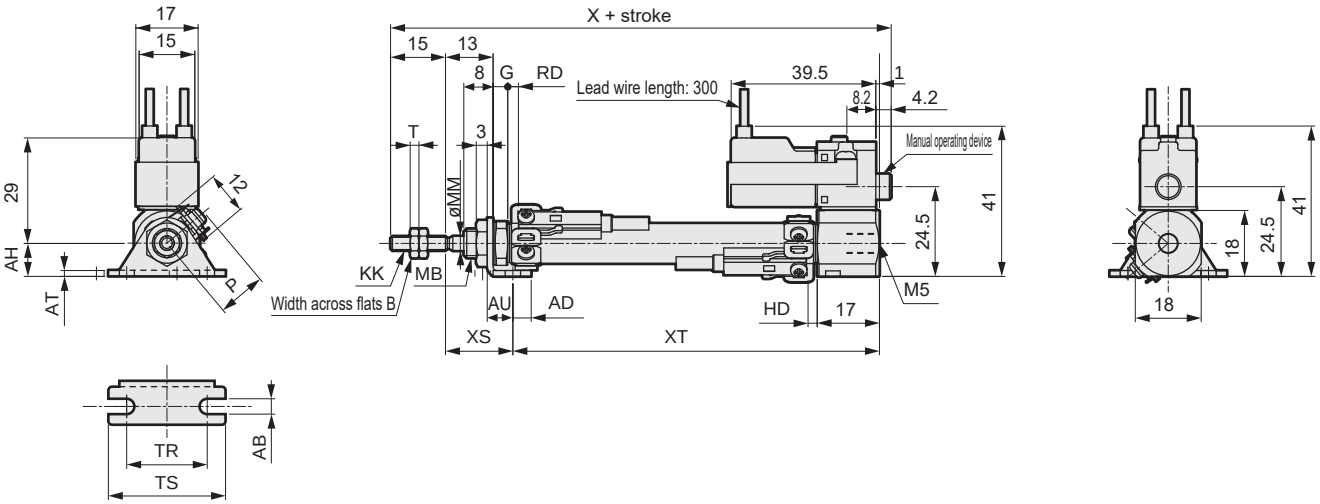

*1: For the dimensions of the accessories, refer to page 15.

Code / Bore size (mm)	Axial foot (one side) (LS) Basic dimensions														Mounting dimensions									
	B	G	KK	MB	MM	T	X								AB	AH	AD	AU	AT	TR	TS	XS	XT	
							15 or less	16 ≤ 30	31 ≤ 45	46 ≤ 60	61 ≤ 75	76 ≤ 90	91 ≤ 105	106 ≤ 120									15 or less	16 ≤ 30
ø10	7	4	M4	M8x1.0	4	2.4	86.2	91.2	101.2	106.2	116.2	121.2	131.2	136.2	4.2	9	5	7	1.6	22	32	18.4	49.6	54.6
ø16	8	4	M5	M10x1.0	5	3.2	86.2	91.2	101.2	106.2	116.2	121.2	131.2	136.2	5.2	14	6	9	2.3	29	42	19.7	48.3	53.3

Code / Bore size (mm)	With switch																							
	T0, T5, T2, T3														HD	T2W, T3W									HD	P
	RD															RD										
	31 ≤ 45	46 ≤ 60	61 ≤ 75	76 ≤ 90	91 ≤ 105	106 ≤ 120	15 or less	16 ≤ 30	31 ≤ 45	46 ≤ 60	61 ≤ 75	76 ≤ 90	91 ≤ 105	106 ≤ 120		15 or less	16 ≤ 30	31 ≤ 45	46 ≤ 60	61 ≤ 75	76 ≤ 90	91 ≤ 105	106 ≤ 120			
ø10	64.6	69.6	79.6	84.6	94.6	99.6	13.5	18.5	28.5	33.5	43.5	48.5	58.5	63.5	2.5	15	20	30	35	45	50	60	65		4	13.5
ø16	63.3	68.3	78.3	83.3	93.3	98.3	11.5	16.5	26.5	31.5	41.5	46.5	56.5	61.5	3.5	13.5	18.5	28.5	33.5	43.5	48.5	58.5	63.5		5	17

Dimensions

CAD

● Rod side flange (FA)

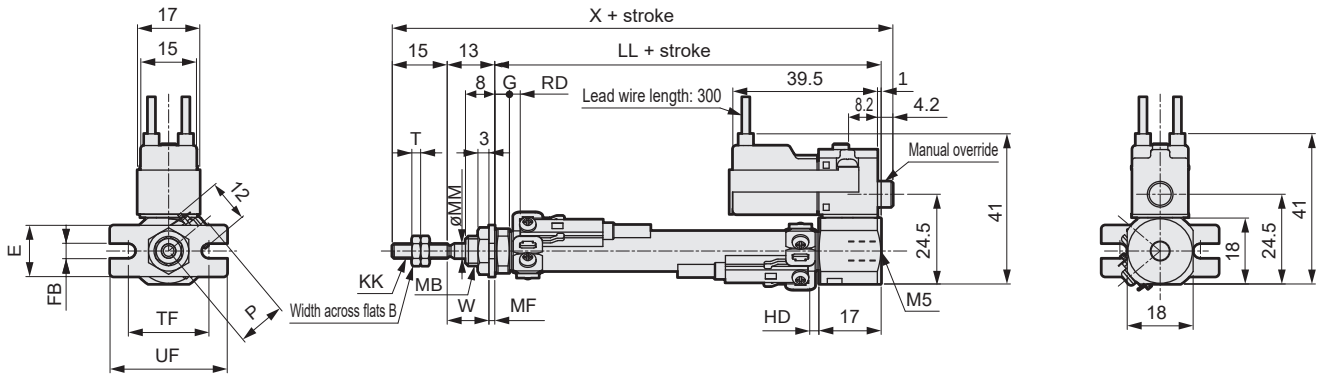

*1: For the dimensions of the accessories, refer to page 15.

Code / Bore size (mm)	Rod side flange (FA) Basic dimensions																					Mounting dimensions	
	B	G	KK	LL								MB	MM	T	X							E	FB
				15 or less	16 ≤ 30	31 ≤ 45	46 ≤ 60	61 ≤ 75	76 ≤ 90	91 ≤ 105	106 ≤ 120				15 or less	16 ≤ 30	31 ≤ 45	46 ≤ 60	61 ≤ 75	76 ≤ 90	91 ≤ 105	106 ≤ 120		
ø10	7	4	M4	55	60	70	75	85	90	100	105	M8x1.0	4	2.4	86.2	91.2	101.2	106.2	116.2	121.2	131.2	136.2	14	4.2
ø16	8	4	M5	55	60	70	75	85	90	100	105	M10x1.0	5	3.2	86.2	91.2	101.2	106.2	116.2	121.2	131.2	136.2	20	5.2

Code / Bore size (mm)					With switch																		
	MF	TF	UF	W	T0, T5, T2, T3 RD								HD	T2W, T3W RD								HD	P
					15 or less	16 ≤ 30	31 ≤ 45	46 ≤ 60	61 ≤ 75	76 ≤ 90	91 ≤ 105	106 ≤ 120		15 or less	16 ≤ 30	31 ≤ 45	46 ≤ 60	61 ≤ 75	76 ≤ 90	91 ≤ 105	106 ≤ 120		
ø10	1.6	22	32	11.4	13.5	18.5	28.5	33.5	43.5	48.5	58.5	63.5	2.5	15	20	30	35	45	50	60	65	4	13.5
ø16	2.3	29	42	10.7	11.5	16.5	26.5	31.5	41.5	46.5	56.5	61.5	3.5	13.5	18.5	28.5	33.5	43.5	48.5	58.5	63.5	5	17

Dimensions

● Basic (00)

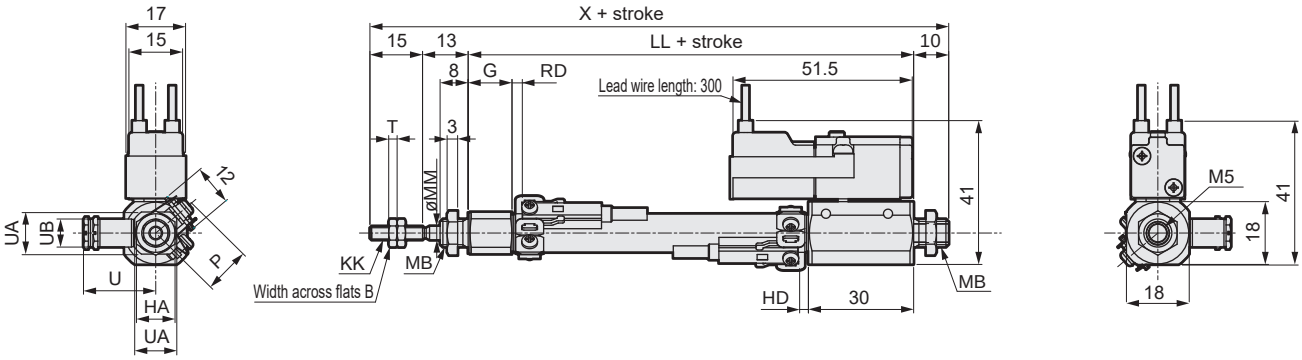

*1: For the dimensions of the accessories, refer to page 15.

Code / Bore size	Basic (00) Basic dimensions												With switch				
	B	HA	G	KK	LL	MB	MM	T	U	UA	UB	X	T0, T5, T2, T3		T2W, T3W		P
													RD	HD	RD	HD	
ø10	7	11	12.5	M4	67	M8x1.0	4	2.4	21	12	8	105	3.5	2.5	5.5	4	13.5
ø16	8	14	13	M4	67	M10x1.0	5	3.2	21	18	8	105	2	3.5	3.5	5	17

● Axial foot (one side) (LS)

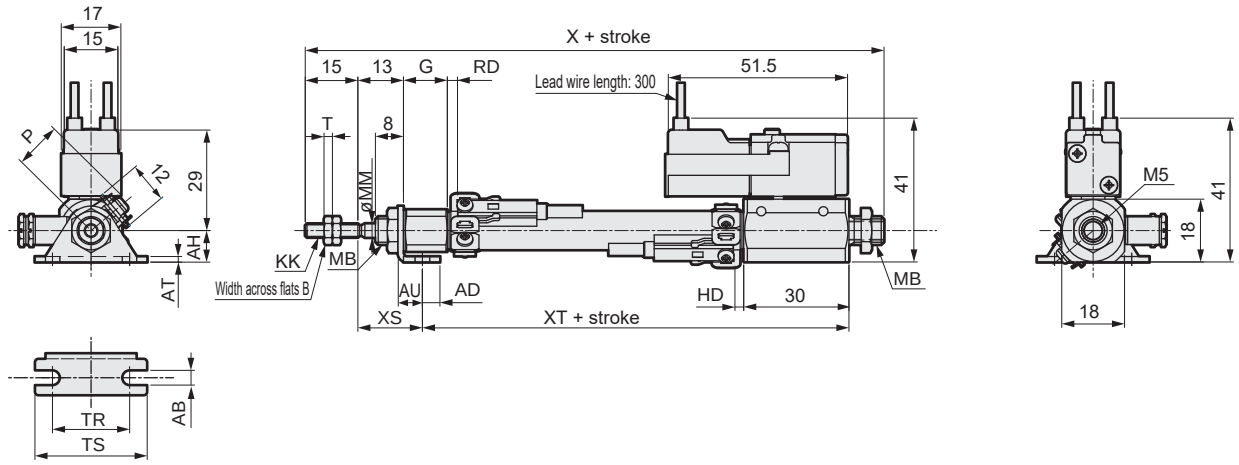

*1: For the dimensions of the accessories, refer to page 15.

Code / Bore size	Axial foot (one side) (LS) Basic dimensions							Mounting dimensions								
	B	G	KK	MB	MM	T	X	AB	AH	AO	AT	AU	TR	TS	XS	XT
ø10	7	12.5	M4	M8x1.0	4	2.4	105	4.2	9	5	1.6	7	22	32	18.4	61.6
ø16	8	13	M5	M10x1.0	5	3.2	105	5.2	14	6	2.3	9	29	42	19.7	60.3

Code / Bore size	With switch				
	T0, T5, T2, T3		T2W, T3W		P
	RD	HD	RD	HD	
ø10	3.5	2.5	5.5	4	13.5
ø16	2	3.5	3.5	5	17

Dimensions

● Two-sided axial foot (LB)

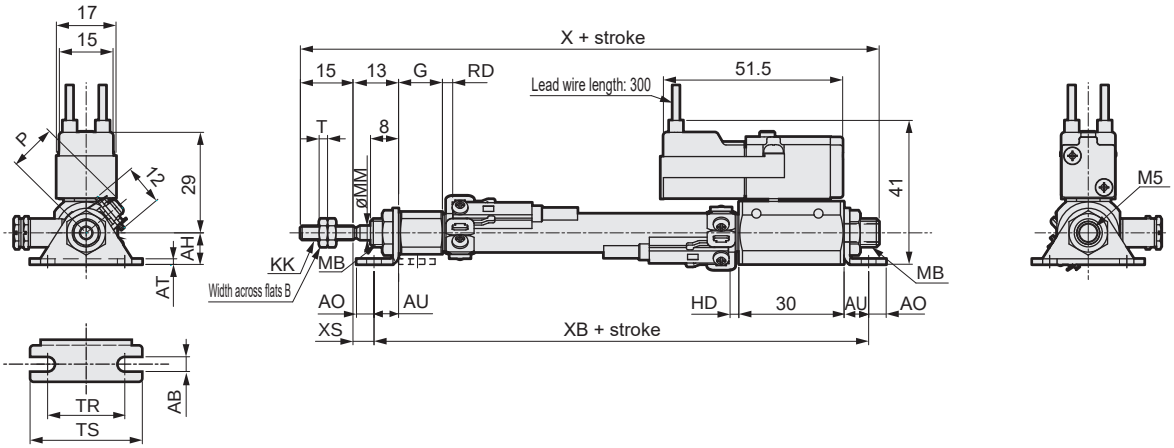

*1: For the dimensions of the accessories, refer to page 15.

Code / Bore size	Two-sided axial foot (LB) Basic dimensions							Mounting dimensions								
	B	G	KK	MB	MM	T	X	AB	AH	AO	AT	AU	TR	TS	XB	XS
ø10	7	12.5	M4	M8x1.0	4	2.4	105	4.2	9	5	1.6	7	22	32	81	6
ø16	8	13	M5	M10x1.0	5	3.2	105	5.2	14	6	2.3	9	29	42	85	4

Code / Bore size	With switch				
	T0, T5, T2, T3		T2W, T3W		P
	RD	HD	RD	HD	
ø10	3.5	2.5	5.5	4	13.5
ø16	2	3.5	3.5	5	17

● Rod side flange (FA)

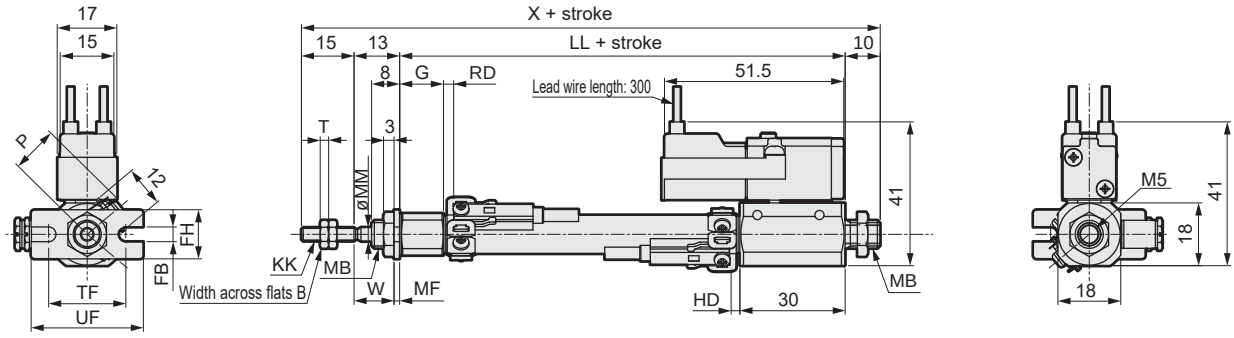

*1: For the dimensions of the accessories, refer to page 15.

Code / Bore size	Rod side flange (FA) Basic dimensions								Mounting dimensions						With switch				
	B	G	KK	LL	MB	MM	T	X	FB	FH	MF	TF	UF	W	T0, T5, T2, T3		T2W, T3W		P
															RD	HD	RD	HD	
ø10	7	12.5	M4	67	M8x1.0	4	2.4	105	4.2	14	1.6	22	32	11.4	3.5	2.5	5.5	4	13.5
ø16	8	13	M5	67	M10x1.0	5	3.2	105	5.2	20	2.3	29	42	10.7	2	3.5	3.5	5	17

Safety Precautions

Be sure to read this section before use.
Refer to Intro Page 73 for general cylinder information, and to Intro Page 80 for cylinder switches.

Product-specific cautions: Pencil shaped cylinder SCP*3 Series

Design/selection

1. Rubber-air cushioned SCPD3-*C

CAUTION

■ Note that, structurally, the stroke end position cannot be retained if air supply is cut off.
When detecting the stroke end by switch, set the switch position with pneumatic pressure applied, as otherwise the position may be out of the detection range.

2. Fine speed SCPD3-F

CAUTION

■ Use without lubrication.
● Applying lubrication may cause changes in characteristics.

■ Assemble the speed controller near the cylinder.
● When installed at a distant place from the cylinder, the adjustment becomes unstable.
● For the speed controller, SC-M3/M5-F, SC3W and SCD-M3/M5-F Series are recommended.

■ At the higher air pressure and the lower load factor, the speed generally becomes more stable.
● Use at a 50% or less load factor.

■ Stable speed control is achieved with a meter-out circuit.
● When fine speed activation is performed with operating direction PUSH for the single rod cylinder, the popping out phenomenon occurs when operation starts if the load resistance is low. As a countermeasure, use a circuit of ⓑ, ⓒ or ⓓ. Note that circuit ⓓ is the most stable.

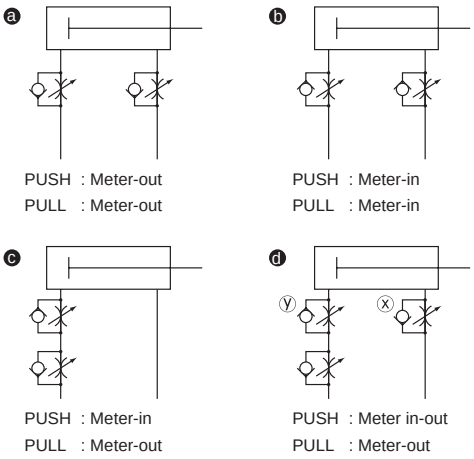

ⓓSpeed adjustment method for PUSH operation of circuit:
1. Set the speed with the speed controller x.
2. Restrict the speed with the speed controller y until there is no popping out.
3. Check the speed again.

(Note 1) When comparing ⓑⓒⓓ, the circuit ⓓis the most stable.

(Note 2) For vertical mounting, combine the cylinder with a meter-out circuit, as it will fall under its own weight when a meter-in circuit is used.

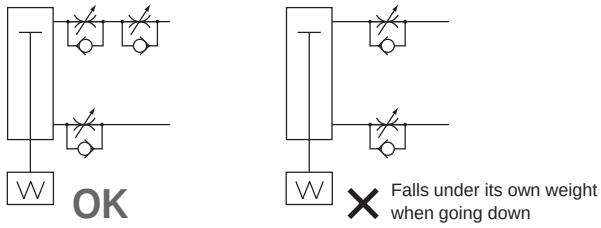

(Note 3) Use the circuit shown in the figure below for the serial connection of the speed controllers.

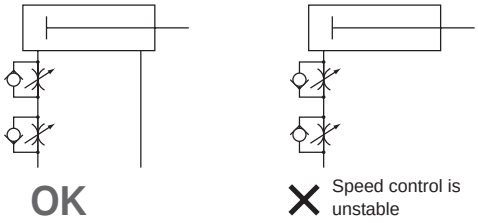

(Guidelines for pop-out generation)
Popping out occurs in the following cases.
· Thrust > Resistance
* Resistance: Thrust caused by residual pressure on the exhaust side (in the fine speed, suction pressure = residual pressure) + { When using horizontally: frictional force caused by load / When using vertically: load self-weight

■ Do not apply a lateral load to the cylinder.
● With a lateral load, operation will become unstable.

■ Avoid use in places subject to vibrations.
● The product will be adversely affected by vibration and operation will become unstable.

3. SCP*3-V with valve

CAUTION

■ If the energizing time exceeds 20 minutes, the service life may be reduced.
■ Do not use the meter-in speed controller.
The product may not operate at the min. working pressure due to the controlled flow rate.
Contact CKD for details.

Mounting, installation and adjustment

1. Common

⚠ CAUTION

■ Mount the T-switch as shown in the following figure.

When using the standard T-switch (SW-T*)

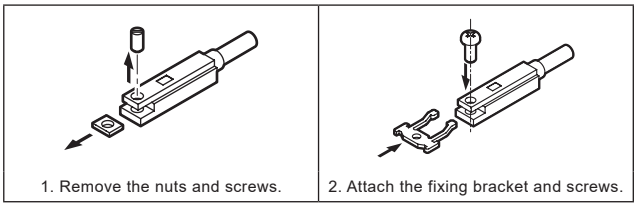
1. Remove the nuts and screws.
2. Attach the fixing bracket and screws.

1. Insert the square hole of the band into the fixing bracket, and mount it on the cylinder.

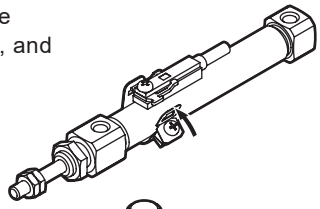

If the mounting is difficult, mount it according to the steps below.
(1) Loosen the switch-side screw.
(2) Insert the square hole of the band into the fixing bracket.

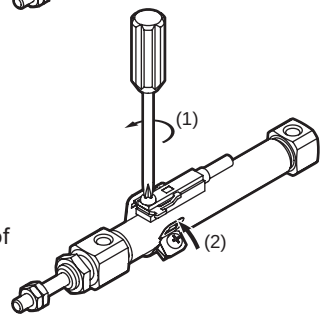

2. Loosen the switch-side screw.
Tightening torque: 0.1 to 0.15 N·m

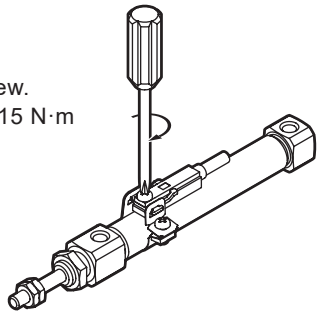

3. Loosen the band-side screw.
Tightening torque: 0.1 to 0.15 N·m

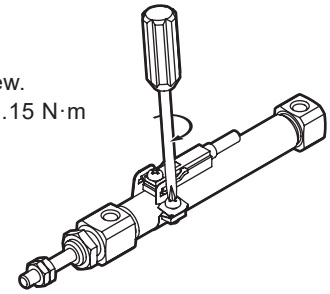

4. When adjusting the switch mounting position
Loosen the switch-side screw to adjust the position, and fix it by tightening the screw at the best position.
Tightening torque: 0.1 to 0.15 N·m

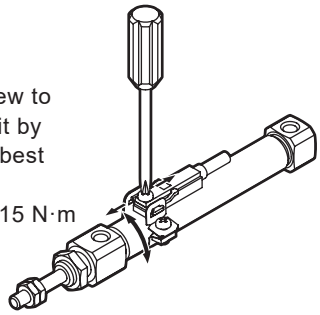

■ The cylinder switch could malfunction if cylinders with switch are installed adjacently in parallel. Check that the distances are provided between cylinders according to Table 1 below.

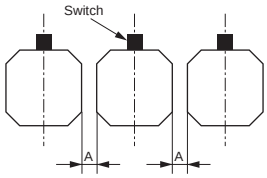

Table 1: Dimension A (mm)

Bore size \ Switch	T0/T5 Reed	T2/T3 Proximity
ø6	≥ 0 *1	≥ 3
ø10	≥ 0	≥ 3
ø16	≥ 0	≥ 3

*1 Keep separated by 3 mm or more for SCPS-6 axial port direction.

■ The cylinder switch could malfunction if cylinders with switch are installed adjacently in other ways. Check that the distances are provided between cylinders according to Table 2 below.

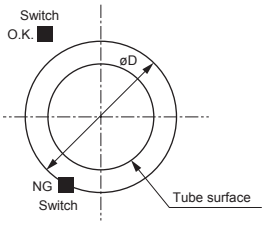

Table 2: Dimension D (mm)

Bore size \ Switch	T0/T5 Reed	T2/T3 Proximity
ø6	ø16.5 or more	ø22.5 or more
ø10	ø21 or more	ø26.5 or more
ø16	ø34 or more	ø35 or more

■ Avoid strained piping such that a lateral force is applied to the cylinder tube.
The cylinder tube is inclined, and this could cause malfunctions.

■ When piping, be sure to use a hose nipple (with fixed throttle) or a speed controller.
Refer to page 15 for hose nipple.

■ Do not turn the cover.
● If the cover is turned when mounting the cylinder or screwing the pipe fitting into the port, damage from the cover connection could occur.

■ When fixing a workpiece onto the end of the piston rod, tighten so that torque is not applied to the cylinder body.

■ When tightening the hexagon nut (No. 3 in internal structure and parts list on page 12), use the torque within the tightening torque range as below.
ø6 : 1.46 N·m ± 10%
ø10 : 4.09 N·m ± 10%
ø16 : 8.78 N·m ± 10%

2. Single acting SCPS/SCPS3/SCPH3

⚠ CAUTION

■ Do not use the single acting cylinder in the way such that a load is applied when the piston rod is pulled for the push or when the piston rod is pushed for the pull type.
Because the built-in spring in the cylinder has only a force for returning the piston rod, the rod cannot be returned to the stroke end when a load is applied.

■ For the single acting cylinder, because a breathing hole is provided on the cover surface, take care not to block the hole when installing the cylinder.
Otherwise, malfunctions may result.

■ Do not leave the single acting cylinder pressurized.
If it is left pressurized for long periods, the piston rod may not return due to spring load when the pressure is released.

3. Fine speed SCPD3-F

⚠ CAUTION

■ Perform adjustment such as centering so that a lateral load is not applied to the cylinder.
Adjust and install the sliding guide so that it is not twisted.
- When the load or the resistance fluctuates, operation becomes unstable.
- With a large difference between static friction and kinematic friction of the guide, operation becomes unstable.

4. Rotation-stop SCPS3-M/SCPD3-M

⚠ CAUTION

■ For the rotation-stop, install it so that a rotation torque is not applied to the piston rod.
The bushing may be deformed and the service life may be shortened.

■ This product is manufactured so that the direction of the width across flats of the piston rod is parallel to the side surface of the rod cover. However, this is not a guarantee of accuracy.

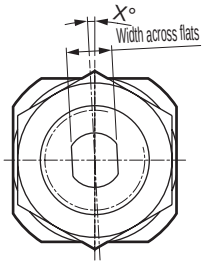

Use/maintenance

1. Common

⚠ CAUTION

■ Because this cylinder is a non-disassembly type, do not apply excessive force to the end cover or tube.

2. Rubber-air cushioned SCPD3-*C

⚠ CAUTION

■ Because of changes in the cushion stiffness when left for long periods, the stroke may become slightly shorter than the standard value at the low pressure setting. Perform a trial run, such as operating several times and performing back-and-forth operation at high supply pressure.

CMK2

Medium bore size cylinder

ø20/ø25/ø32/ø40

Standard

Overview

Medium bore size (ø20 to ø40) series with high corrosion resistance and long service life among general purpose cylinders. A wide range of caulked cylinders is available.

CONTENTS

Series variation	82
Variation and option combination selection table	84
● Double acting/single rod (CMK2)	86
● Single acting/push (CMK2-S)	100
● Single acting/pull (CMK2-SR)	106
● Double acting/stroke adjustable/push (CMK2-P)	112
● Double acting/stroke adjustable/pull (CMK2-R)	118
● Double acting/heat resistant (CMK2-T)	124
● Double acting/rubber-air cushioned (CMK2-*C)	128
● Double acting/air cushioned (CMK2-C)	136
● Double acting/position locking (CMK2-Q)	142
● Double acting/fine speed (CMK2-F)	148
● Double acting/double rod (CMK2-D)	154
● Double acting/back to back (CMK2-B)	160
● Double acting/rotation-stop (CMK2-M)	166
● Double acting/built-in speed controller (CMK2-Z)	172
● Double acting/low hydraulic (CMK2-H)	178
● Double acting/coolant proof (CMK2-G2/G3)	182
● Double acting/exterior 100% stainless steel/water resistant (CMK2-JG2/JG3)	188
CMK2 Series common switch dimensions	198
CMK2 Series common accessory dimensions	98
⚠ Safety precautions	200

The cylinder switches T2YH, T2YV, T3YH, and T3YV are scheduled for end of production at the end of December 2023.

Series variation

Medium bore size cylinder CMK2 Series

Variation	Model No. JIS symbol	Bore size (mm)	Standard stroke (mm) 25	50	75	100	150	200	250	300	Min. stroke (mm)	Max. stroke (mm)	Custom stroke (per mm)	Basic 00	Axial foot Two sides LB
Double acting	CMK2	ø20/ø25/ø32/ø40	●	●	●	●	●	●	●	●	5	750	1	●	●
Single acting/push	CMK2-S	ø20/ø25	●	●	●	●	●				5	300	1	●	●
		ø32/ø40	●	●	●	●	●	●				300		●	●
Single acting/pull	CMK2-SR	ø20/ø25	●	●	●	●	●				5	300	1	●	●
		ø32/ø40	●	●	●	●	●	●				300		●	●
Double acting/stroke adjustable (push)	CMK2-P	ø20/ø25	●	●	●	●	●	●	●	●	25	450	1	●	●
		ø32	●	●	●	●	●	●	●	●		430		●	●
		ø40	●	●	●	●	●	●	●	●		400		●	●
Double acting/stroke adjustable (pull)	CMK2-R	ø20/ø25/ø32/ø40	●	●	●	●	●	●	●	●	25	750	1	●	●
Double acting/heat resistant	CMK2-T	ø20/ø25/ø32/ø40	●	●	●	●	●	●	●	●	5	750	1	●	●
Double acting/rubber-air cushioned	CMK2-*C	ø20/ø25/ø32/ø40	●	●	●	●	●	●	●	●	5	750	1	●	●
Double acting/air cushioned	CMK2-C	ø20/ø25/ø32/ø40	●	●	●	●	●	●	●	●	5	750	1	●	●
Double acting/position locking	CMK2-Q	ø20/ø25/ø32/ø40	●	●	●	●	●	●	●	●	5	750	1	●	●
Double acting/fine speed	CMK2-F	ø20/ø25/ø32/ø40	●	●	●	●	●	●	●	●	5	750	1	●	●
Double acting/double rod	CMK2-D	ø20/ø25	●	●	●	●	●	●	●	●	5	500	1	●	●
		ø32	●	●	●	●	●	●	●	●		480		●	●
		ø40	●	●	●	●	●	●	●	●		450		●	●
Double acting/back to back	CMK2-B	ø20/ø25/ø32/ø40	●	●	●	●	●	●	●	●	5	750	1	●	●
Double acting/rotation-stop	CMK2-M	ø20/ø25/ø32/ø40	●	●	●	●	●	●	●	●	5	750	1	●	●
Double acting built-in speed controller	CMK2-Z	ø20/ø25/ø32/ø40	●	●	●	●	●	●	●	●	5	750	1	●	●
Double acting/low hydraulic	CMK2-H	ø20/ø25/ø32/ø40	●	●	●	●	●	●	●	●	5	750	1	●	●
Double acting/coolant proof	CMK2-G2/G3	ø20/ø25/ø32/ø40	●	●	●	●	●	●	●	●	5	750	1	●	●
Double acting/exterior 100% stainless steel/water resistance	CMK2-JG2/JG3	ø20/ø25/ø32/ø40	○	○	○	○	○	○	○	○	5	750	1	○	○

●: Standard, ◎: Option, ○: Made to order, ▒ : Not available

Mounting									Option								Accessory				
Axial foot One side	Rod side flange	Head side flange	Eye bracket	Eye bracket integrated	Eye bracket bush pressfit	Clevis bracket	Rod side trunnion	Head side trunnion	Bellows (100°C)	Bellows (250°C)	With push-in fitting, straight	With push-in fitting, elbow	Piston rod material change	Boss cutoff	Food-grade (NSF H1) grease	Copper and PTFE free	Rod eye	Rod clevis	Clevis bracket	Switch	Page
LS	FA	FB	CA	CC	CC1	CB	TA	TB	J	L	F	FE	M	V	FP1	P6	I	Y	B2		
●	●	●	●	●	●	●	●	●	◎	◎	◎	◎	◎	◎		◎	◎	◎	◎	◎	86
●	●	●	●	●	●	●	●	●	◎	◎	◎	◎	◎	◎		◎	◎	◎	◎	◎	100
●	●	●	●	●	●	●	●	●	◎	◎	◎	◎	◎	◎		◎	◎	◎	◎		
●	●	●	●	●	●	●	●	●	◎	◎	◎	◎	◎	◎		◎	◎	◎	◎	◎	106
●	●	●	●	●	●	●	●	●	◎	◎	◎	◎	◎	◎		◎	◎	◎	◎		
●	●	●					●	●	◎	◎	◎	◎	◎			◎	◎	◎	◎		
●	●	●					●	●	◎	◎	◎	◎	◎			◎	◎	◎	◎	◎	112
●	●	●					●	●	◎	◎	◎	◎	◎			◎	◎	◎	◎		
●	●	●					●	●	◎	◎	◎	◎	◎			◎	◎	◎	◎	◎	118
●	●	●	●	●	●	●	●	●		◎			◎	◎			◎	◎	◎		124
●	●	●	●	●	●	●	●	●	◎	◎	◎	◎	◎	◎		○	○	○	○	○	128
●	●	●	●	●	●	●	●	●	◎	◎	◎	◎	◎	◎			◎	◎	◎	◎	136
●	●	●	●	○ *1	○ *1	●	● *2	● *1			◎	◎	◎	○ *1		◎	◎	◎	◎	◎	142
●	●	●	●	●	●	●	●	●						◎			◎	◎	◎	◎	148
●	●						●		◎	◎	◎	◎	◎			◎	◎	◎	◎		
●	●						●		◎	◎	◎	◎	◎			◎	◎	◎	◎	◎	154
●	●						●		◎	◎	◎	◎	◎			◎	◎	◎	◎		
	●								◎	◎	◎	◎	◎			◎	◎	◎	◎	◎	160
●	●	●	●	●	●	●	●	●	◎	◎	◎	◎	◎	◎			◎	◎	◎	◎	166
●	●	●	●	●	○	●	●	●	◎	◎	◎	◎	◎	◎		○	◎	◎	◎	◎	172
●	●	●	●	●	●	●	●	●	◎	◎			◎	◎		◎	◎	◎	◎	◎	178
●	●	●	●	●	●	●	●	●			○ *3	○ *3					◎	◎	◎	◎	182
○	○	○		○										○	○		○	○		○	188

*1: Available for the rod-side position locking. *2: Available for the head-side position locking. *3: Available for G2.

Variation and option combination selection table

◎ : Option
○ : Available (made-to-order product)
△ : Available depending on conditions (Contact CKD.)
x : Not available

Category		Variation																	Port thread		Cushion	Option									
		Double acting basic	Single acting push	Single acting pull	Double acting double rod	Back to back	Stroke adjustable (push)	Stroke adjustable (pull)	With position locking	Rotation-stop	With air cushion	With speed controller	Low hydraulic	Heat resistance (120°C)	Fine speed	Coolant proof scraper (NBR)	Coolant proof scraper (FKM)	Double acting/exterior 100% stainless steel/water resistant	NPT	G	Rubber-air cushioned	With bellows (polyolefin)	With bellows (silicone rubber)	With push-in fitting	Piston rod material stainless steel	Boss cutoff	Copper and PTFE free	With non-locking manual override	With locking manual override	Specify piston rod end form
Code		None	S	SR	D	B	P	R	Q	M	C	Z	H	T	F	G2	G3	JG2/3	N	G	C	J	L	F/FE	M	V	P6	M0	M1	N**
Variation	Double acting basic	Blank	x	x															○	○		◎	◎	◎	◎	◎	◎	x	x	○
Variation	Single acting push	S		x	x	○	△	○	x	△	x	x	x	△	x	△	△	△	○	○	x	◎	◎	◎	◎	◎	◎	x	x	○
Variation	Single acting pull	SR			x	○	△	x	x	△	x	x	x	△	x	△	△	△	○	○	x	◎	◎	◎	◎	◎	◎	x	x	○
Variation	Double acting double rod	D				x	x	x	○	○	○	○	○	○	*4	○	○	△	○	○	○	◎	◎	◎	◎	x	◎	x	x	○
Variation	Back to back	B					x	x	*1	*2	○	○	○	○	○	○	○	△	○	○	○	◎	◎	◎	◎	x	◎	x	x	○
Variation	Stroke adjustable (push)	P						x	*11	○	x	○	○	○	*4	x	x	x	○	○	x	◎	◎	◎	◎	x	◎	x	x	○
Variation	Stroke adjustable (pull)	R							*8	○	x	x	x	○	○	○	○	x	○	○	x	◎	◎	◎	◎	x	◎	x	x	○
Variation	With position locking	Q								x	*3	x	x	x	x	x	x	x	○	○	x	△	△	◎	◎	*8	◎	◎	◎	○
Variation	Rotation-stop	M									x	x	x	x	x	x	x	x	○	○	x	◎	◎	◎	*10	◎	△	x	x	○
Variation	With air cushion	C										x	x	x	*5	△	x	x	○	○	x	◎	◎	◎	◎	◎	△	x	x	○
Variation	With speed controller	Z											x	x	x	△	x	x	○	○	x	◎	◎	◎	◎	◎	○	x	x	○
Variation	Low hydraulic	H												x	x	△	x	x	○	○	x	◎	◎	x	◎	◎	◎	x	x	○
Variation	Heat resistance (120°C)	T													x	x	x	x	○	○	x	*6	◎	x	◎	◎	x	x	x	○
Variation	Fine speed	F														x	x	x	○	○	*5	*7	*7	x	◎	◎	x	x	x	○
Variation	Coolant proof scraper (NBR)	G2															x		○	○	○	x	x	○	*9	○	○	x	x	○
Variation	Coolant proof scraper (FKM)	G3																	○	○	x	x	x	x	*9	○	○	x	x	○
Variation	Double acting/exterior 100% stainless steel/water resistant	JG2/3																	△	△	△	x	x	x		○	x	x	x	○
Port thread	NPT	N																		x	○	x	x	x	x	x	x	x	x	x
Port thread	G	G																			○	x	x	x	x	x	x	x	x	x
Cushion	Rubber-air cushioned	C																				○	○	○	○	○	○	x	x	○
Option	With bellows (polyolefin)	J																					x	○	○	○	○	○	○	○
Option	With bellows (silicone rubber)	L																						○	○	○	○	○	○	○
Option	With push-in fitting	F/FE																							○	○	○	○	○	○
Option	Piston rod material stainless steel	M																								○	○	○	○	○
Option	Boss cutoff	V																									○	*8	*8	○
Option	Copper and PTFE free	P6																										◎	◎	○
Option	With non-locking manual override	M0																											x	○
Option	With locking manual override	M1																												○
Option	Specify piston rod end form	N**																												
Accessory	Cylinder switch	Separate list	◎	◎	◎	◎	◎	◎	◎	◎	◎	◎	◎	◎	x	◎	◎	◎		◎	◎		◎	◎	◎	◎	◎	◎	◎	◎	◎
Accessory	Rod eye	I	◎	◎	◎	◎	◎	◎	◎	◎	◎	◎	◎	◎	◎	◎	◎	◎		◎	◎		◎	◎	◎	◎	◎	◎	◎	◎	◎
Accessory	Rod clevis	Y	◎	◎	◎	◎	◎	◎	◎	◎	◎	◎	◎	◎	◎	◎	◎	◎		◎	◎		◎	◎	◎	◎	◎	◎	◎	◎	◎
Accessory	B2 bracket	B2	◎	◎	◎	x	◎	◎	◎	◎	◎	◎	◎	◎	◎	◎	◎	◎		◎	◎		◎	◎	◎	◎	◎	◎	◎	◎	◎

Caution
*1 : Specify the cylinder to which the position locking mechanism is attached. Also specify whether to attach it to rod side or head side. (Provide a sketch)
*2 : Specify the cylinder to which the rotation-stop mechanism is attached.
*3 : Cushion can be attached to the cover side where the position locking mechanism is not attached. (Example: For CMK2-Q-32-ST-H, a cushion can be attached to the rod side.)
*4 : The friction resistance will be higher than that of the standard low speed (or fine speed).
*5 : The expected low speed performance cannot be obtained in the cushion area of the stroke end.
*6 : Compatible with working temperatures of up to 100°C.
*7 : The expected low speed performance may not be obtained due to bellows reaction force.
*8 : Available for the rod side position locking only.
*9 : G2 and G3 piston rod and nut are stainless steel (M) as standard. (M code is not required.)
*10 : Piston rod material of the rotation-stop is stainless steel (M) as standard. (If M is selected, the rod nut material will also be stainless steel.)
*11 : Available for the head side position locking only.

[Example of model No.]

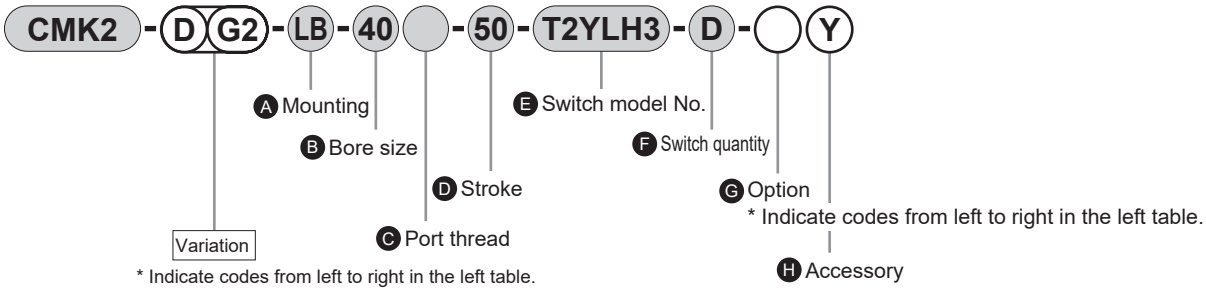

Model No.: Double acting/standard

● Variation	: Double rod/coolant proof scraper
Ⓐ Mounting	: Two-sided foot
Ⓑ Bore size	: ø40 mm
Ⓒ Port thread	: Rc thread
Ⓓ Stroke	: 50 mm
Ⓔ Switch model No.	: Coolant proof switch, lead wire length 3 m
Ⓕ Switch quantity	: 2
Ⓖ Option	: None
Ⓗ Accessory	: Rod clevis

*1 : The back to back includes two cylinders. Specify the model No. as below when ordering variations.
For S1 variations only, insert the variation code before the stroke of S1.
(Example) CMK2-B-32-H25-50: S1 only is low hydraulic.
For S2 variations only, insert the variation code before the stroke of S2.
(Example) CMK2-B-32-25-H50: Only S2 is the low hydraulic.
When ordering the same variation for S1 and S2, insert the variation code before the bore size.
(Example) CMK2-BH-32-25-50: Both S1 and S2 are low hydraulic.

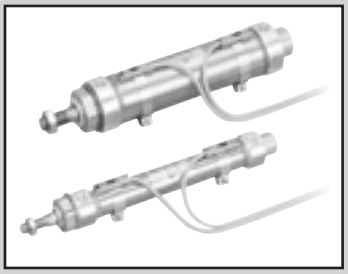

Medium bore size cylinder/
double acting/single rod

CMK2 Series

● Bore size: ø20/ø25/ø32/ø40

JIS symbol

● Double acting cylinder single rod

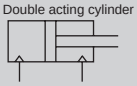

RoHS CAD

Specifications

Item		CMK2			
Bore size	mm	ø20	ø25	ø32	ø40
Actuation		Double acting			
Working fluid		Compressed air			
Max. working pressure	MPa	1.0 (≈150 psi, 10 bar)			
Min. working pressure	MPa	0.1 (≈15 psi, 1 bar)			
Proof pressure	MPa	1.6 (≈230 psi, 16 bar)			
Ambient temperature	°C	-10 (14°F) to 60 (140°F) (no freezing)			
Port size		Rc1/8			
Stroke tolerance	mm	$^{+2.0}_{0}$ (Up to 200), $^{+2.4}_{0}$ (More than 200)			
Working piston speed	mm/s	50 to 500			
Cushion		Rubber cushion			
Lubrication		Not required (use turbine oil ISO VG32 if necessary for lubrication)			
Allowable absorbed energy	J	0.166	0.308	0.424	0.639

Stroke

Bore size (mm)	Standard stroke (mm)	Max. stroke (mm)		Min. stroke (mm)	
		Without bellows	With bellows	Without bellows Bellows "L"	Bellows "J"
ø20	25/50/75/100/150/200/250/300	750	750	5	25
ø25					
ø32					
ø40					

*1: The custom stroke is available in 1 mm increments.
*2: Single foot (LS) has the max. stroke of 50 mm.
*3: Contact CKD when stroke shorter than 25 mm is required for "J" bellows.

Min. stroke with switch

(Unit: mm)

Switch quantity	1					2					3				
	Proximity			Reed		Proximity			Reed		Proximity			Reed	
Bore size (mm)	T2, T3	T2W, T3W	T1, T*Y*	T0, T5	T8	T2, T3	T2W, T3W	T1, T*Y*	T0, T5	T8	T2, T3	T2W, T3W	T1, T*Y*	T0, T5	T8
ø20	10					25	30	35	25	35	50	55	55	50	55
ø25	10					25	30	35	25	35	50	55	55	50	55
ø32	10					25	30	35	25	35	50	55	55	50	55
ø40	10					25	30	35	25	35	50	55	55	50	55

*1: Up to 3 switches can be mounted.

Switch specifications

● 1-color/2-color LED

Item	2-wire proximity	2-wire proximity			3-wire proximity				2-wire reed						
	T1H/T1V	T2H/T2V/ T2JH/T2JV	T2YH/ T2YV	T2WH/ T2WV	T3H/ T3V	T3PH/ T3PV	T3YH/ T3YV	T3WH/ T3WV	T0H/T0V		T5H/T5V		T8H/T8V		
Applications	For programmable controller, relay, compact solenoid valve	Dedicated for programmable controller			For programmable controller, relay				For programmable controller, relay		For programmable controller, relay, IC circuit (without indicator lamp), serial connection		For programmable controller, relay		
Output method	-				NPN output	PNP output	NPN output	NPN output	-						
Pwr. supp. V.	-				10 to 28 VDC				-						
Load voltage	85 to 265 VAC	10 to 30 VDC		24 VDC ±10%	30 VDC or less				12/24 VDC	100/110 VAC	5/12/24 VDC	100/110 VAC	12/24 VDC	110 VAC	220 VAC
Load current	5 to 100 mA	5 to 20 mA (*3)			100 mA or less		50 mA or less		5 to 50 mA	7 to 20 mA	50 mA or less	20 mA or less	5 to 50 mA	7 to 20 mA	7 to 10 mA
Indicator	LED (Lit when ON)	LED (Lit when ON)	Red/green LED (Lit when ON)	Red/green LED (Lit when ON)	LED (Lit when ON)	Yellow LED (Lit when ON)	Red/green LED (Lit when ON)	Red/green LED (Lit when ON)	LED (Lit when ON)		No indicator lamp		LED (Lit when ON)		
Leakage current	1 mA or less with 100 VAC, 2 mA or less with 200 VAC	1 mA or less			10 μA or less				0 mA						
Weight g	1 m:33 3 m:87 5 m:142	1 m:18 3 m:49 5 m:80	1 m:33 3 m:87 5 m:142	1 m:18 3 m:49 5 m:80	1 m:18 3 m:49 5 m:80		1 m:33 3 m:87 5 m:142	1 m:18 3 m:49 5 m:80	1 m:18 3 m:49 5 m:80				1 m:33 3 m:87 5 m:142		

*1: Refer to Ending Page 1 for detailed switch specifications and dimensions.
*2: Switches other than the above models, such as switches with connectors, are also available. Refer to Ending Page 1.
*3: The max. load current is 20 mA at 25°C. The current is lower than 20 mA if the operating ambient temperature around the switch is higher than 25˚C. (5 to 10 mA at 60°C)

Bellows max. operating ambient temperature

Code	Bellows material	Max. ambient temp.	Instantaneous max. temp.
J	Polyolefin elastomer	100°C	200°C
L	Silicone rubber glass cloth	250°C	400°C

The instantaneous max. temperature is the temperature when sparks and cutting chips, etc., instantaneously contact the bellows.

Cylinder weight

(Unit: kg)

Item/mounting / Bore size (mm)	Product weight when stroke (S) = 0 mm								Switch weight (per 1 pc.)	Switch rail + band weight	Additional weight per S = 10 mm
	Basic (00)	Axial foot (LB)	Axial foot (LS)	Flange (FA/FB)	Eye bracket (CA)	Clevis (CC)	Clevis bracket (CB)	Trunnion (TA/TB)			
ø20	0.17	0.32	0.25	0.23	0.32	0.18	0.32	0.22	Refer to the weight in the switch specifications.	0.005	0.01
ø25	0.26	0.52	0.39	0.41	0.50	0.26	0.50	0.36		0.005	0.01
ø32	0.30	0.56	0.43	0.45	0.54	0.30	0.54	0.40		0.009	0.02
ø40	0.48	0.74	0.61	0.63	0.72	0.50	0.72	0.64		0.009	0.02

(Example) Product weight of CMK2-FA-32-50-T0H-D

Product weight when S = 0 mm .....0.45 kg
Additional weight when S = 50 mm .....Additional weight when S = 10 mm 0.02 x $\frac{\text{Product stroke (50)}}{10}$ = 0.10kg
Weight of 2 switches.....0.036 kg
Weight of switch rail + 2 bands .....0.018 kg
Product weight.....0.45 kg+0.1 kg+0.036 kg+0.018 kg=0.604 kg

Theoretical thrust table

(Unit: N)

Bore size (mm)	Operating direction	Working pressure MPa										
		0.1	0.15	0.2	0.3	0.4	0.5	0.6	0.7	0.8	0.9	1.0
ø20	Push	31.4	47.1	62.8	94.2	1.26×10^2	1.57×10^2	1.88×10^2	2.20×10^2	2.51×10^2	2.83×10^2	3.14×10^2
	Pull	23.6	35.3	47.1	70.7	94.2	1.18×10^2	1.41×10^2	1.65×10^2	1.88×10^2	2.12×10^2	2.36×10^2
ø25	Push	49.1	73.6	98.2	1.47×10^2	1.96×10^2	2.45×10^2	2.95×10^2	3.44×10^2	3.93×10^2	4.42×10^2	4.91×10^2
	Pull	37.8	56.7	75.6	1.13×10^2	1.51×10^2	1.89×10^2	2.27×10^2	2.64×10^2	3.02×10^2	3.40×10^2	3.78×10^2
ø32	Push	80.4	1.21×10^2	1.61×10^2	2.41×10^2	3.22×10^2	4.02×10^2	4.83×10^2	5.63×10^2	6.43×10^2	7.24×10^2	8.04×10^2
	Pull	69.1	1.04×10^2	1.38×10^2	2.07×10^2	2.76×10^2	3.46×10^2	4.15×10^2	4.84×10^2	5.53×10^2	6.22×10^2	6.91×10^2
ø40	Push	1.26×10^2	1.88×10^2	2.51×10^2	3.77×10^2	5.03×10^2	6.28×10^2	7.54×10^2	8.80×10^2	1.01×10^3	1.13×10^3	1.26×10^3
	Pull	1.10×10^2	1.65×10^2	2.21×10^2	3.31×10^2	4.41×10^2	5.51×10^2	6.62×10^2	7.72×10^2	8.82×10^2	9.92×10^2	1.10×10^3

How to order

No switch (built-in magnet for switch)

CMK2 - 00 - 20 ( ) - 100 ——— Y

With switch (built-in magnet for switch)

CMK2 - 00 - 20 ( ) - 100 - T0H - R - V Y

Ⓐ Mounting *1

Ⓑ Bore size

Ⓒ Port thread

Ⓓ Stroke

Ⓔ Switch model No.

Ⓕ Switch quantity *8

Ⓖ Option *4, *5

Ⓗ Accessory *5

Code	Description
Ⓐ Mounting	
00	Basic
LB	Axial foot (two sides)
LS	Axial foot (one side)
FA	Rod side flange
FB	Head side flange
CA	Eye bracket
CC	Eye bracket integrated
CC1	Eye bracket, bush pressfit
CB	Clevis bracket (pin and split washer pin included)
TA	Rod side trunnion
TB	Head side trunnion

Ⓑ Bore size (mm)		
20	ø20	*9
25	ø25	*9
32	ø32	
40	ø40	

Ⓒ Port thread	
Blank	Rc thread
NN	NPT thread (made-to-order product)
GN	G thread (made-to-order product)

Ⓓ Stroke (mm)		
Bore size	Stroke *2	Custom stroke
ø20	5 to 750	In 1 mm increments
ø25	5 to 750	
ø32	5 to 750	
ø40	5 to 750	

Ⓔ Switch model No.

Axial lead wire		Contact	Voltage AC	Voltage DC	Indicator	Lead wire
T0H*	T0V*	Reed	●	●	1-color LED	2-wire
T5H*	T5V*	Reed	●	●	No indicator lamp	2-wire
T8H*	T8V*	Reed	●	●	1-color LED	2-wire
T1H*	T1V*	Prox.	●		1-color LED	2-wire
T2H*	T2V*	Prox.		●	1-color LED	2-wire
T3H*	T3V*	Prox.		●	1-color LED	3-wire
T3PH*	T3PV*	Prox.		●	1-color LED	3-wire
T2WH*	T2WV*	Prox.		●	2-color LED	2-wire
T2YH*	T2YV*	Prox.		●	2-color LED	2-wire
T3WH*	T3WV*	Prox.		●	2-color LED	3-wire
T3YH*	T3YV*	Prox.		●	2-color LED	3-wire
T2JH*	T2JV*	Prox.		●	1-color LED off-delay	2-wire

*** Lead wire length**	
Blank	1 m (standard)
3	3 m (option)
5	5 m (option)

Ⓕ Switch quantity	
R	1 on rod side
H	1 on head side
D	2
T	3

Ⓖ Option

		Max. ambient temp.	Instantaneous max. temp.
J	Bellows	100°C	200°C
L	Bellows	250°C	400°C
F	With push-in fitting (straight)		
FE	With push-in fitting (elbow)		
M	Piston rod material (stainless steel) *9		
V	Boss cutoff		
P6	Copper and PTFE free *10		

Ⓗ Accessory	
I	Rod eye
Y	Rod clevis (pin and split washer pin included)
B2	Clevis bracket (pin and snap ring included)

⚠ Precautions for model No. selection

*1 : One side foot (LS) has the max. stroke of 50 mm.
*2 : For the min. stroke with switch and the max. and min. strokes with bellows, refer to page 86.
*3 : The compatible tube O.D. of F (with push-in fitting (straight)) and FE (with push-in fitting (elbow)) is ø6.
*4 : The instantaneous max. temperature is the temperature when sparks and cutting chips, etc., instantaneously contact the bellows.
*5 : "I" and "Y" cannot be selected together.
*6 : Refer to Ending Page 85 for custom specifications of rod end form.
*7 : Refer to page 84 for combination of variations/options.
*8 : Up to three switches can be installed. If four or more switches are required, switch mounting brackets for the extra switches must be prepared separately.
*9 : For 20 or 25 bore size, the rod is stainless steel as standard and the rod nut is zinc chromate. If a stainless steel rod nut is necessary, select the "M" option code.
*10 : The "CCI" mounting is not available for copper and PTFE free (P6).

[Example of model No.]

CMK2-00-20-100-T0H-R-VY

Model: Medium bore size cylinder Double acting/standard

Ⓐ Mounting : Basic
Ⓑ Bore size : ø20 mm
Ⓒ Port thread : Rc thread
Ⓓ Stroke : 100 mm
Ⓔ Switch model No. : Reed T0H switch, lead wire 1m
Ⓕ Switch quantity : 1 on rod side
Ⓖ Option : Boss cutoff
Ⓗ Accessory : Rod clevis

How to order switch

● Switch body + mounting bracket set

CMK2 - T0H - 20

Switch model No. (Item Ⓔ on page 88)

Bore size (Item Ⓑ on page 88)

● Switch body only

SW - T0H

Switch model No. (Item Ⓔ on page 88)

● Mounting bracket set

CMK2 - T - 20

Mounting bracket

Bore size (Item Ⓑ on page 88)

How to order mounting bracket

Bore size (mm) / Mounting bracket	ø20	ø25	ø32	ø40
Basic (00) *3	M1-00-20	M1-00-30	M1-00-30	M1-00-30
Axial foot (LB/LS)	M1-LB-20	M1-LB-30	M1-LB-30	M1-LB-30
Flange (FA/FB)	M1-FA-20	M1-FA-30	M1-FA-30	M1-FA-30
Trunnion (TA/TB)	M1-TA-20	M1-TA-30	M1-TA-30	M1-TA-40
Eye bracket (CA)	M1-CA-20	M1-CA-30	M1-CA-30	M1-CA-30
Clevis bracket (CB)	M1-CB-20	M1-CB-30	M1-CB-30	M1-CB-30

*1: Regarding mounting brackets, mounting nuts and toothed washers are supplied with the axial foot and flange. The trunnion includes mounting nuts.
*2: For axial foot (two-sided), 2 sets of the “M1-LB-*1” in the table above are required.
*3: Mounting nut, toothed washer only. Although 1 set is included with the basic of the product (00), use this when needed.

Specifications for rechargeable battery

(Catalog No. CC-1226A)

● Design compatible with rechargeable battery manufacturing process

CMK2 - … - P4*

* Contact CKD for details.

SCP*3
CMK2
CMA2
SCM
SCG
SCA2
SCS2
CKV2
CAV2/ COVP/N2
SSD2
SSG
SSD
CAT
MDC2
MVC
SMG
MSD/ MSDG
FC*
STK
SRL3
SRG3
SRM3
SRT3
MRL2
MRG2
SM-25
ShkAbs
FJ
FK
Spd Contr
Ending

Internal structure and parts list

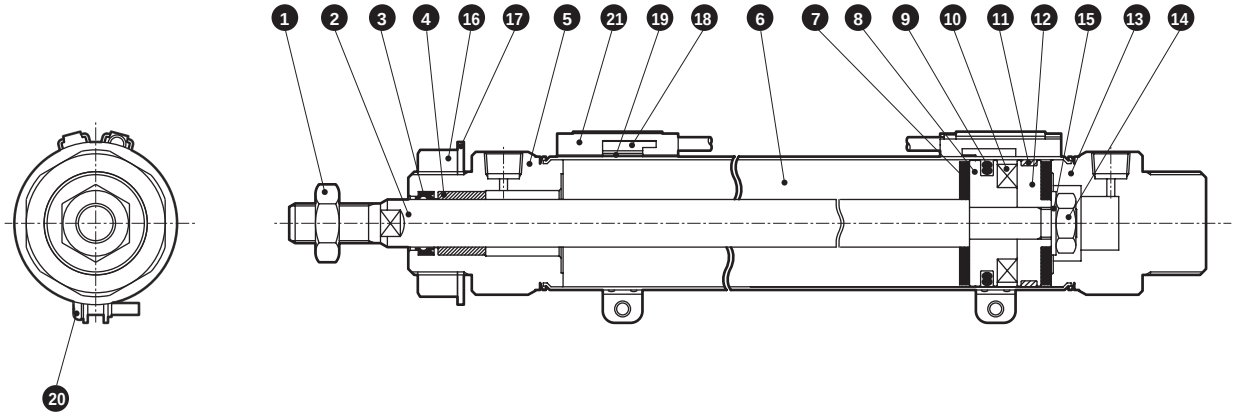

Cannot be disassembled

● Note: This product is a caulked and cannot be disassembled.

No.	Part name	Material	Remarks	No.	Part name	Material	Remarks
1	Rod nut	Steel	Zinc chromate	11	Wear ring	Polyacetal resin	
2	Piston rod	ø20, ø25: Stainless steel ø32, ø40: Carbon steel	Industrial chrome plating	12	Piston B	Aluminum alloy	
				13	Head cover	Aluminum alloy	
3	Rod packing	Nitrile rubber		14	Hexagon nut	Steel	Zinc chromate
4	Bush	ø20: Dry bearing ø25, ø32, ø40: Copper-based	*1	15	Spacer	Steel	Zinc chromate
				16	Nut	Steel	Zinc chromate
5	Rod cover	Aluminum alloy		17	Toothed washer	Steel	Zinc chromate
6	Cylinder tube	Stainless steel		With switch			
7	Cushion rubber	Urethane rubber		18	Switch body		
8	Piston A	Aluminum alloy		19	Band	Stainless steel	
9	Piston packing	Nitrile rubber		20	Pan head machine screw	Stainless steel	
10	Magnet	Plastic		21	Switch rail	Stainless steel	

*1: Oleoresin bearing for copper and PTFE free.

Material of mounting bracket

Mounting	Material
LB/LS	Steel
FA/FB	Steel
TA/TB	Steel
CA	Steel
CB	Steel

● Note: Mounting bracket will be shipped with the product.
However, if the product is supplied with bellows and the mounting bracket is LB, FA, or TA, it will be shipped assembled.

Dimensions

● Basic (00)

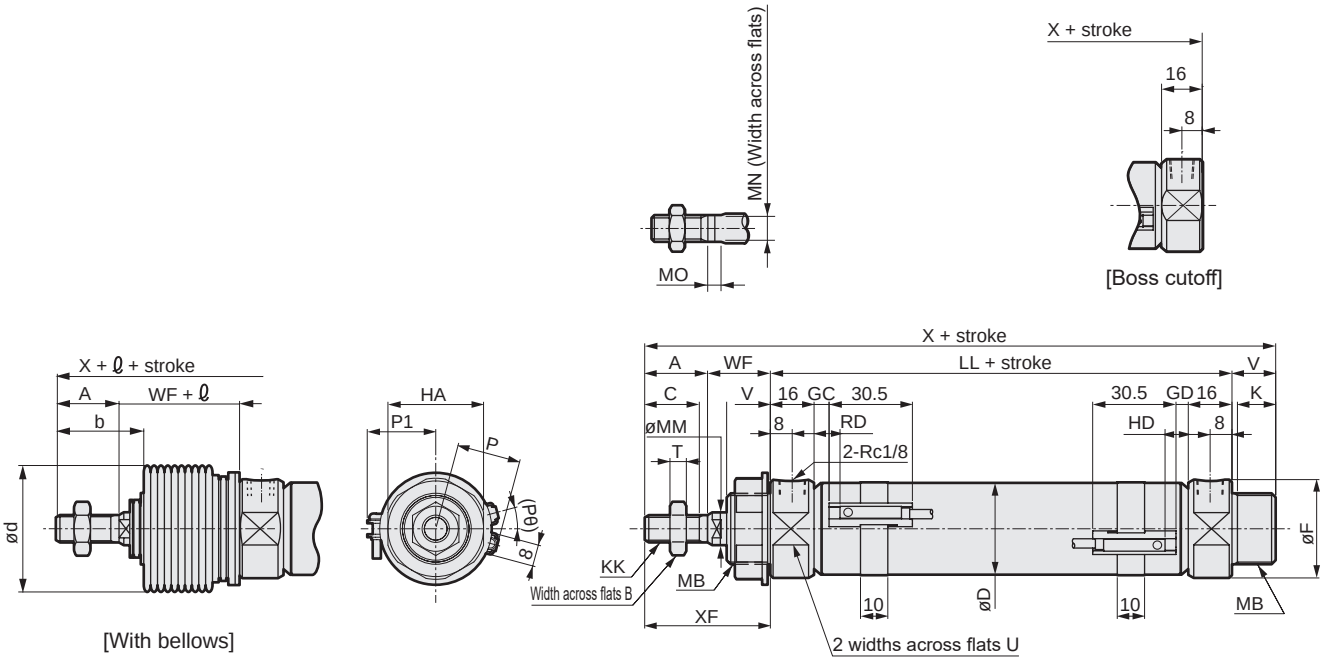

RD: Rod side max. sensitivity position
HD: Head side max. sensitivity position

Code	Basic (00) Basic dimensions																		
Bore size (mm)	A	B	C	D	F	HA	K	KK	LL	MB	MM	MN	MO	T	U	V	WF	X	XF
ø20	20	13	18	21.4	28	26	12	M 8x1.0	66	M18x1.5	10	8	5	5	24	14	24	124	44
ø25	23	17	20	26.4	32	35	14	M10x1.25	69	M26x1.5	12	10	5	6	30	16	23	131	46
ø32	23	17	20	33.6	36	35	14	M10x1.25	69	M26x1.5	12	10	5	6	34	16	23	131	46
ø40	25	19	22	41.6	45	35	14	M12x1.5	73	M26x1.5	14	12	6	7	43	16	23	137	48

Code	With switch											With bellows			Boss cutoff
	T0, T5, T2, T3				T2W, T3W				P	P1	(Pθ)°	b	d	ℓ	X
Bore size (mm)	GC	GD	RD	HD	GC	GD	RD	HD							
ø20	4	3	8	7	6	5	10	9	17.3	19.5	22	30	30	(Stroke/3) + 6	110
ø25	5.5	4.5	9.5	8.5	7.5	6.5	11.5	10.5	19.8	22.0	18	32	46	(Stroke/3.25) + 7	115
ø32	5.5	4.5	9.5	8.5	7.5	6.5	11.5	10.5	24.3	25.5	15	32	46	(Stroke/3.25) + 7	115
ø40	7.5	6.5	11.5	10.5	9.5	8.5	13.5	12.5	28.3	29.5	12	34	46	(Stroke/3.25) + 7	121

*1 : For the ℓ dimension, round up below the decimal point.
2 : Refer to page 198 for HD, RD, and protruding dimensions of T1, T8* and 2-color LED switches.
*3 : For the dimensions of the accessories, refer to page 98.

SCP*3
CMK2
CMA2
SCM
SCG
SCA2
SCS2
CKV2
CAV2/ COVP/N2
SSD2
SSG
SSD
CAT
MDC2
MVC
SMG
MSD/ MSDG
FC*
STK
SRL3
SRG3
SRM3
SRT3
MRL2
MRG2
SM-25
ShkAbs
FJ
FK
Spd Contr
Ending

Dimensions

● Axial foot (LB)

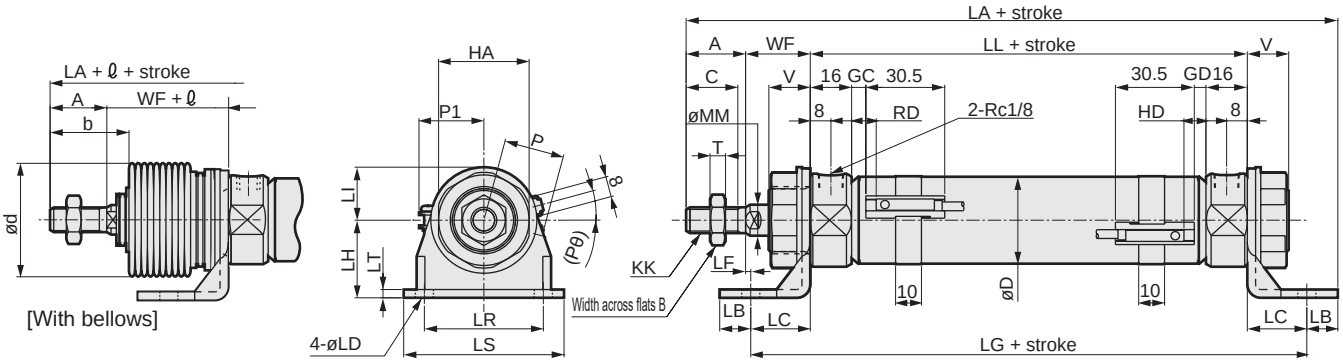

*1 : For the ℓ dimension, round up below the decimal point.
2 : Refer to page 198 for HD, RD, and protruding dimensions of T1, T8* and 2-color LED switches.
*3 : For the dimensions of the accessories, refer to page 98.

Code	Axial foot (LB) Basic dimensions											Mounting dimensions							
Bore size (mm)	A	B	C	D	HA	KK	LL	MM	T	V	WF	LA	LB	LC	LD	LF	LG	LH	LI
ø20	20	13	18	21.4	26	M 8x1.0	66	10	5	14	24	138	10	18	6	6	102	25	15
ø25	23	17	20	26.4	35	M10x1.25	69	12	6	16	23	150	12	23	7	0	115	30	20
ø32	23	17	20	33.6	35	M10x1.25	69	12	6	16	23	150	12	23	7	0	115	30	20
ø40	25	19	22	41.6	35	M12x1.5	73	14	7	16	23	156	12	23	7	0	119	30	20

Code				With switch												With bellows		
				T0, T5, T2, T3				T2W, T3W										
Bore size (mm)	LR	LS	LT	GC	GD	RD	HD	GC	GD	RD	HD	P	P1	(Pθ)°	b	d	ℓ
ø20	30	44	3.2	4	3	8	7	6	5	10	9	17.3	19.5	22	30	30	(Stroke/3) + 6
ø25	46	62	3.2	5.5	4.5	9.5	8.5	7.5	6.5	11.5	10.5	19.8	22.0	18	32	46	(Stroke/3.25) + 7
ø32	46	62	3.2	5.5	4.5	9.5	8.5	7.5	6.5	11.5	10.5	24.3	25.5	15	32	46	(Stroke/3.25) + 7
ø40	46	62	3.2	7.5	6.5	11.5	10.5	9.5	8.5	13.5	12.5	28.3	29.5	12	34	46	(Stroke/3.25) + 7

● Axial foot (single) (LS)

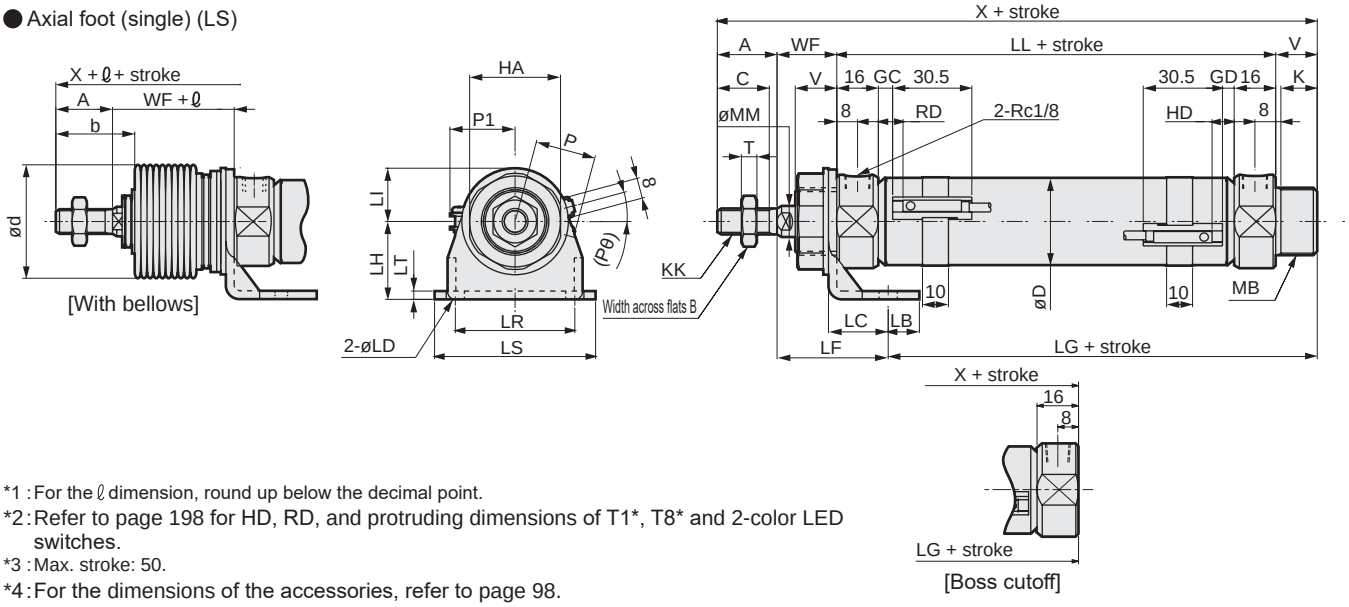

*1 : For the ℓ dimension, round up below the decimal point.
2 : Refer to page 198 for HD, RD, and protruding dimensions of T1, T8* and 2-color LED switches.
*3 : Max. stroke: 50.
*4 : For the dimensions of the accessories, refer to page 98.

Code	Axial foot (single) (LS) Basic dimensions														Mounting dimensions					
Bore size (mm)	A	B	C	D	HA	K	KK	LL	MB	MM	T	V	WF	X	LB	LC	LD	LF	LG	LH
ø20	20	13	18	21.4	26	12	M 8x1.0	66	M18x1.5	10	5	14	24	124	10	18	6	38.8	65.2	25
ø25	23	17	20	26.4	35	14	M10x1.25	69	M26x1.5	12	6	16	23	131	12	23	7	42.8	65.2	30
ø32	23	17	20	33.6	35	14	M10x1.25	69	M26x1.5	12	6	16	23	131	12	23	7	42.8	65.2	30
ø40	25	19	22	41.6	35	14	M12x1.5	73	M26x1.5	14	7	16	23	137	12	23	7	42.8	69.2	30

Code					With switch												With bellows			Boss cutoff	
					T0, T5, T2, T3				T2W, T3W												
Bore size (mm)	LI	LR	LS	LT	GC	GD	RD	HD	GC	GD	RD	HD	P	P1	(Pθ)°	b	d	ℓ	X	LG
ø20	15	30	44	3.2	4	3	8	7	6	5	10	9	17.3	19.5	22	30	30	(Stroke/3) + 6	110	51.2
ø25	20	46	62	3.2	5.5	4.5	9.5	8.5	7.5	6.5	11.5	10.5	19.8	22.0	18	32	46	(Stroke/3.25) + 7	115	49.2
ø32	20	46	62	3.2	5.5	4.5	9.5	8.5	7.5	6.5	11.5	10.5	24.3	25.5	15	32	46	(Stroke/3.25) + 7	115	49.2
ø40	20	46	62	3.2	7.5	6.5	11.5	10.5	9.5	8.5	13.5	12.5	28.3	29.5	12	34	46	(Stroke/3.25) + 7	121	53.2

Dimensions

● Rod side flange (FA)

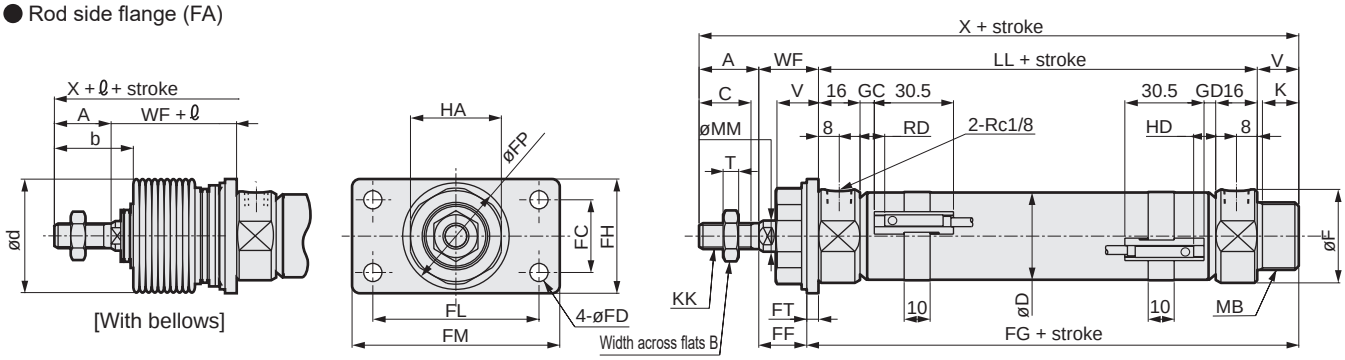

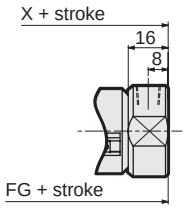

[Boss cutoff]

*1 : For the ℓ dimension, round up below the decimal point.
2 : Refer to page 198 for HD, RD, and protruding dimensions of T1, T8* and 2-color LED switches.
*3 : For the dimensions of the accessories, refer to page 98.

Code / Bore size (mm)	Rod side flange (FA) Basic dimensions															Mounting dimensions			
	A	B	C	D	F	HA	K	KK	LL	MB	MM	T	V	WF	X	FC	FD	FF	FG
ø20	20	13	18	21.4	28	26	12	M 8x1.0	66	M18x1.5	10	5	14	24	124	20	6	20.8	83.2
ø25	23	17	20	26.4	32	35	14	M10x1.25	69	M26x1.5	12	6	16	23	131	28	7	18.5	89.5
ø32	23	17	20	33.6	36	35	14	M10x1.25	69	M26x1.5	12	6	16	23	131	28	7	18.5	89.5
ø40	25	19	22	41.6	45	35	14	M12x1.5	73	M26x1.5	14	7	16	23	137	28	7	18.5	93.5

Code / Bore size (mm)						With switch								With bellows			Boss cutoff	
						T0, T5, T2, T3				T2W, T3W								
	FH	FL	FM	FP	FT	GC	GD	RD	HD	GC	GD	RD	HD	b	d	ℓ	X	FG
ø20	34	40	54	29	3.2	4	3	8	7	6	5	10	9	30	30	(Stroke/3) + 6	110	69.2
ø25	44	64	80	41	4.5	5.5	4.5	9.5	8.5	7.5	6.5	11.5	10.5	32	46	(Stroke/3.25) + 7	115	73.5
ø32	44	64	80	41	4.5	5.5	4.5	9.5	8.5	7.5	6.5	11.5	10.5	32	46	(Stroke/3.25) + 7	115	73.5
ø40	44	64	80	41	4.5	7.5	6.5	11.5	10.5	9.5	8.5	13.5	12.5	34	46	(Stroke/3.25) + 7	121	77.5

● Head side flange (FB)

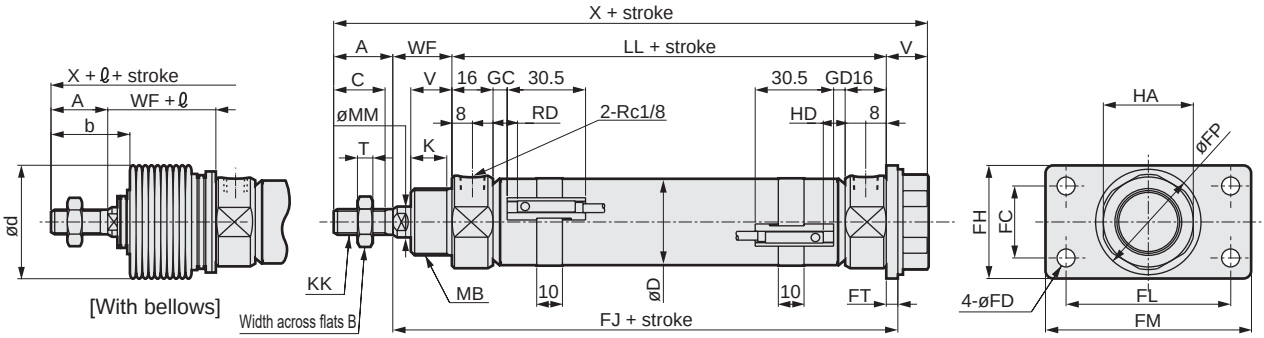

*1 : For the ℓ dimension, round up below the decimal point.
2 : Refer to page 198 for HD, RD, and protruding dimensions of T1, T8* and 2-color LED switches.
*3 : For the dimensions of the accessories, refer to page 98.

Code / Bore size (mm)	Head side flange (FB) Basic dimensions														Mounting dimensions		
	A	B	C	D	HA	K	KK	LL	MB	MM	T	V	WF	X	FC	FD	FH
ø20	20	13	18	21.4	26	12	M 8x1.0	66	M18x1.5	10	5	14	24	124	20	6	34
ø25	23	17	20	26.4	35	14	M10x1.25	69	M26x1.5	12	6	16	23	131	28	7	44
ø32	23	17	20	33.6	35	14	M10x1.25	69	M26x1.5	12	6	16	23	131	28	7	44
ø40	25	19	22	41.6	35	14	M12x1.5	73	M26x1.5	14	7	16	23	137	28	7	44

Code / Bore size (mm)						With switch								With bellows		
						T0, T5, T2, T3				T2W, T3W						
	FJ	FL	FM	FP	FT	GC	GD	RD	HD	GC	GD	RD	HD	b	d	ℓ
ø20	93.2	40	54	29	3.2	4	3	8	7	6	5	10	9	30	30	(Stroke/3) + 6
ø25	96.5	64	80	41	4.5	5.5	4.5	9.5	8.5	7.5	6.5	11.5	10.5	32	46	(Stroke/3.25) + 7
ø32	96.5	64	80	41	4.5	5.5	4.5	9.5	8.5	7.5	6.5	11.5	10.5	32	46	(Stroke/3.25) + 7
ø40	100.5	64	80	41	4.5	7.5	6.5	11.5	10.5	9.5	8.5	13.5	12.5	34	46	(Stroke/3.25) + 7

SCP*3
CMK2
CMA2
SCM
SCG
SCA2
SCS2
CKV2
CAV2/ COVP/N2
SSD2
SSG
SSD
CAT
MDC2
MVC
SMG
MSD/ MSDG
FC*
STK
SRL3
SRG3
SRM3
SRT3
MRL2
MRG2
SM-25
ShkAbs
FJ
FK
Spd Contr
Ending

Dimensions

● Eye bracket (CA)

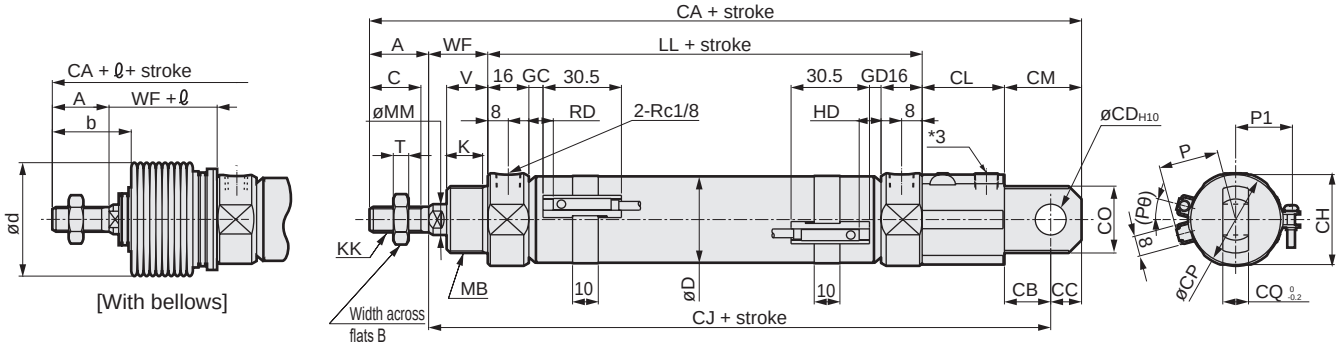

*1 : For the ℓ dimension, round up below the decimal point.
2 : Refer to page 198 for HD, RD, and protruding dimensions of T1, T8* and 2-color LED switches.
*3 : Not piping port.
*4 : For the dimensions of the accessories, refer to page 98.

Code	Eye bracket (CA) Basic dimensions												Mounting dimensions						
Bore size (mm)	A	B	C	D	K	KK	LL	MB	MM	T	V	WF	CA	CB	CC	CD	CH	CJ	CL
ø20	20	13	18	21.4	12	M 8x1.0	66	M18x1.5	10	5	14	24	165	14	10	10	26	135	31
ø25	23	17	20	26.4	14	M10x1.25	69	M26x1.5	12	6	16	23	177	18	12	12	35	142	32
ø32	23	17	20	33.6	14	M10x1.25	69	M26x1.5	12	6	16	23	177	18	12	12	35	142	32
ø40	25	19	22	41.6	14	M12x1.5	73	M26x1.5	14	7	16	23	183	18	12	12	35	146	32

Code					With switch											With bellows		
					T0, T5, T2, T3				T2W, T3W									
Bore size (mm)	CM	CO	CP	CQ	GC	GD	RD	HD	GC	GD	RD	HD	P	P1	(Pθ)°	b	d	ℓ
ø20	24	22	28	8	4	3	8	7	6	5	10	9	17.3	19.5	22	30	30	(Stroke/3) + 6
ø25	30	26	37	10	5.5	4.5	9.5	8.5	7.5	6.5	11.5	10.5	19.8	22.0	18	32	46	(Stroke/3.25) + 7
ø32	30	26	37	10	5.5	4.5	9.5	8.5	7.5	6.5	11.5	10.5	24.3	25.5	15	32	46	(Stroke/3.25) + 7
ø40	30	26	37	10	7.5	6.5	11.5	10.5	9.5	8.5	13.5	12.5	28.3	29.5	12	34	46	(Stroke/3.25) + 7

● Clevis bracket (CB)

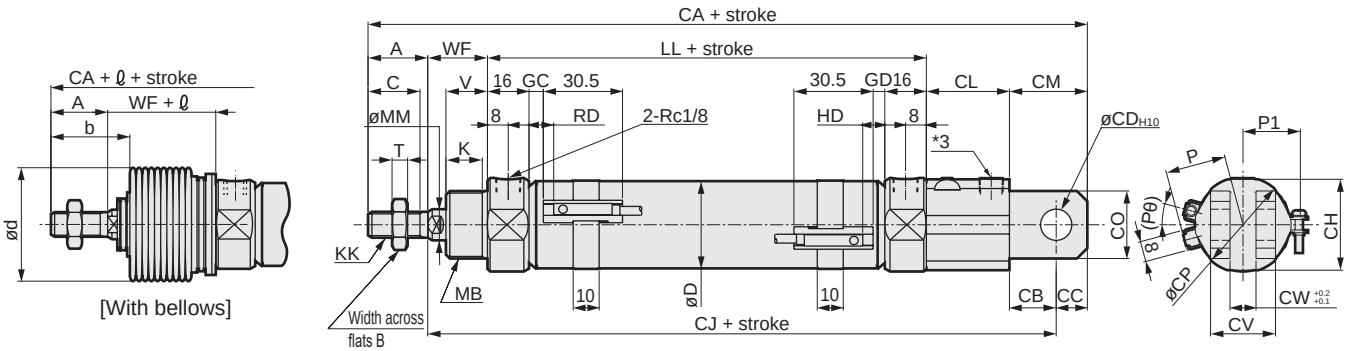

*1 : For the ℓ dimension, round up below the decimal point.
2 : Refer to page 198 for HD, RD, and protruding dimensions of T1, T8* and 2-color LED switches.
*3 : Not piping port.
*4 : For the dimensions of the accessories, refer to page 98.

Code	Clevis bracket (CB) Basic dimensions												Mounting dimensions						
Bore size (mm)	A	B	C	D	K	KK	LL	MB	MM	T	V	WF	CA	CB	CC	CD	CH	CJ	CL
ø20	20	13	18	21.4	12	M 8x1.0	66	M18x1.5	10	5	14	24	165	14	10	10	26	135	31
ø25	23	17	20	26.4	14	M10x1.25	69	M26x1.5	12	6	16	23	177	18	12	12	35	142	32
ø32	23	17	20	33.6	14	M10x1.25	69	M26x1.5	12	6	16	23	177	18	12	12	35	142	32
ø40	25	19	22	41.6	14	M12x1.5	73	M26x1.5	14	7	16	23	183	18	12	12	35	146	32

Code						With switch											With bellows		
						T0, T5, T2, T3				T2W, T3W									
Bore size (mm)	CM	CO	CP	CV	CW	GC	GD	RD	HD	GC	GD	RD	HD	P	P1	(Pθ)°	b	d	ℓ
ø20	24	22	28	19	8	4	3	8	7	6	5	10	9	17.3	19.5	22	30	30	(Stroke/3) + 6
ø25	30	26	37	25	10	5.5	4.5	9.5	8.5	7.5	6.5	11.5	10.5	19.8	22.0	18	32	46	(Stroke/3.25) + 7
ø32	30	26	37	25	10	5.5	4.5	9.5	8.5	7.5	6.5	11.5	10.5	24.3	25.5	15	32	46	(Stroke/3.25) + 7
ø40	30	26	37	25	10	7.5	6.5	11.5	10.5	9.5	8.5	13.5	12.5	28.3	29.5	12	34	46	(Stroke/3.25) + 7

Dimensions

● Eye bracket integrated (CC)
● Eye bracket bush pressfit (CC1)

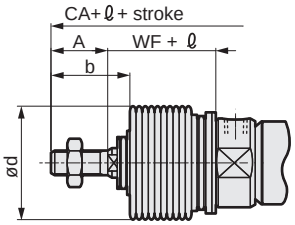

[With bellows]

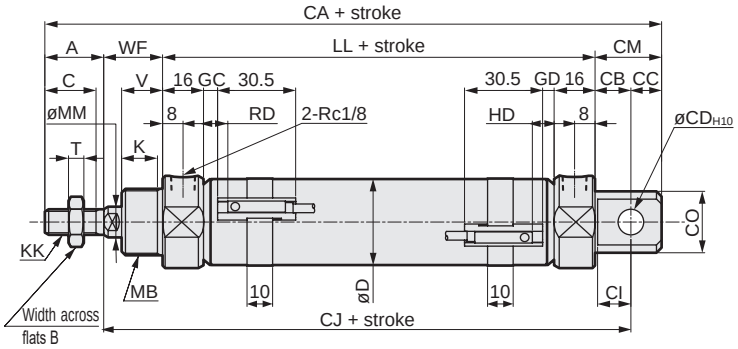

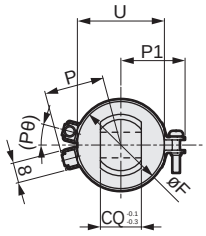

*1 : For the ℓ dimension, round up below the decimal point.
2 : Refer to page 198 for HD, RD, and protruding dimensions of T1, T8* and 2-color LED switches.
*3 : For the dimensions of the accessories, refer to page 98.

Code	Eye bracket integrated (CC) Basic dimensions														Mounting dimensions				
Bore size (mm)	A	B	C	D	F	K	KK	LL	MB	MM	T	U	V	WF	CA	CB	CC	CD	CI
ø20	20	13	18	21.4	28	12	M 8x1.0	66	M18x1.5	10	5	24	14	24	131	12	9	8	11
ø25	23	17	20	26.4	32	14	M10x1.25	69	M26x1.5	12	6	30	16	23	136	12	9	8	11
ø32	23	17	20	33.6	36	14	M10x1.25	69	M26x1.5	12	6	34	16	23	141	14	12	10	13
ø40	25	19	22	41.6	45	14	M12x1.5	73	M26x1.5	14	7	43	16	23	151	16	14	12	15

Code					With switch											With bellows		
					T0, T5, T2, T3				T2W, T3W									
Bore size (mm)	CJ	CM	CO	CQ	GC	GD	RD	HD	GC	GD	RD	HD	P	P1	(Pθ)°	b	d	ℓ
ø20	102	21	22	16	4	3	8	7	6	5	10	9	17.3	19.5	22	30	30	(Stroke/3) + 6
ø25	104	21	24	16	5.5	4.5	9.5	8.5	7.5	6.5	11.5	10.5	19.8	22.0	18	32	46	(Stroke/3.25) + 7
ø32	106	26	24	16	5.5	4.5	9.5	8.5	7.5	6.5	11.5	10.5	24.3	25.5	15	32	46	(Stroke/3.25) + 7
ø40	112	30	30	20	7.5	6.5	11.5	10.5	9.5	8.5	13.5	12.5	28.3	29.5	12	34	46	(Stroke/3.25) + 7

● Eye bracket integrated (CC) with bracket (option code B2)
● Eye bracket bush pressfit (CC1) with bracket (option code B2)

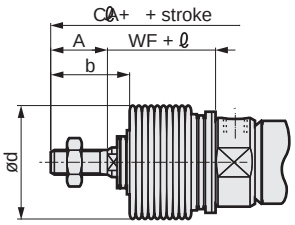

[With bellows]

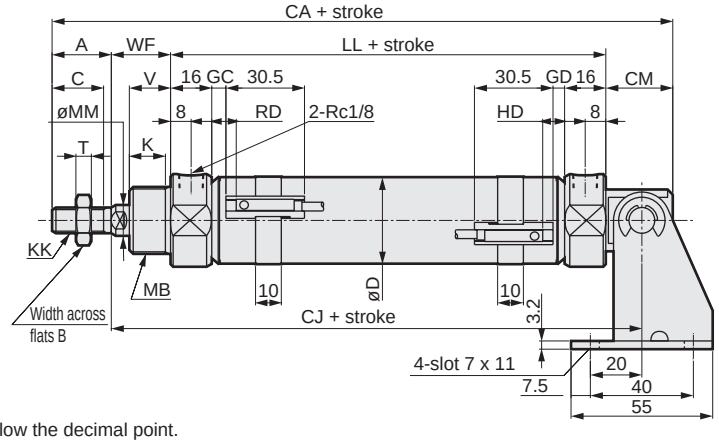

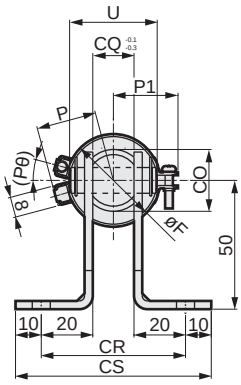

*1 : For the ℓ dimension, round up below the decimal point.
2 : Refer to page 198 for HD, RD, and protruding dimensions of T1, T8* and 2-color LED switches.
*3 : For the dimensions of the accessories, refer to page 98.

Code	Eye bracket integrated (CC) with bracket (option code B2) Basic dimensions														Mounting dimensions			
Bore size (mm)	A	B	C	D	F	K	KK	LL	MB	MM	T	U	V	WF	CA	CJ	CM	CO
ø20	20	13	18	21.4	28	12	M 8x1.0	66	M18x1.5	10	5	24	14	24	131	102	21	22
ø25	23	17	20	26.4	32	14	M10x1.25	69	M26x1.5	12	6	30	16	23	136	104	21	24
ø32	23	17	20	33.6	36	14	M10x1.25	69	M26x1.5	12	6	34	16	23	141	106	26	24
ø40	25	19	22	41.6	45	14	M12x1.5	73	M26x1.5	14	7	43	16	23	151	112	30	30

Code				With switch												With bellows		
				T0, T5, T2, T3				T2W, T3W										
Bore size (mm)	CQ	CR	CS	GC	GD	RD	HD	GC	GD	RD	HD	P	P1	(Pθ)°	b	d	ℓ
ø20	16	56	76	4	3	8	7	6	5	10	9	17.3	19.5	22	30	30	(Stroke/3) + 6
ø25	16	56	76	5.5	4.5	9.5	8.5	7.5	6.5	11.5	10.5	19.8	22.0	18	32	46	(Stroke/3.25) + 7
ø32	16	56	76	5.5	4.5	9.5	8.5	7.5	6.5	11.5	10.5	24.3	25.5	15	32	46	(Stroke/3.25) + 7
ø40	20	60	80	7.5	6.5	11.5	10.5	9.5	8.5	13.5	12.5	28.3	29.5	12	34	46	(Stroke/3.25) + 7

SCP*3
CMK2
CMA2
SCM
SCG
SCA2
SCS2
CKV2
CAV2/ COVP/N2
SSD2
SSG
SSD
CAT
MDC2
MVC
SMG
MSD/ MSDG
FC*
STK
SRL3
SRG3
SRM3
SRT3
MRL2
MRG2
SM-25
ShkAbs
FJ
FK
Spd Contr
Ending

Dimensions

● Rod side trunnion (TA)

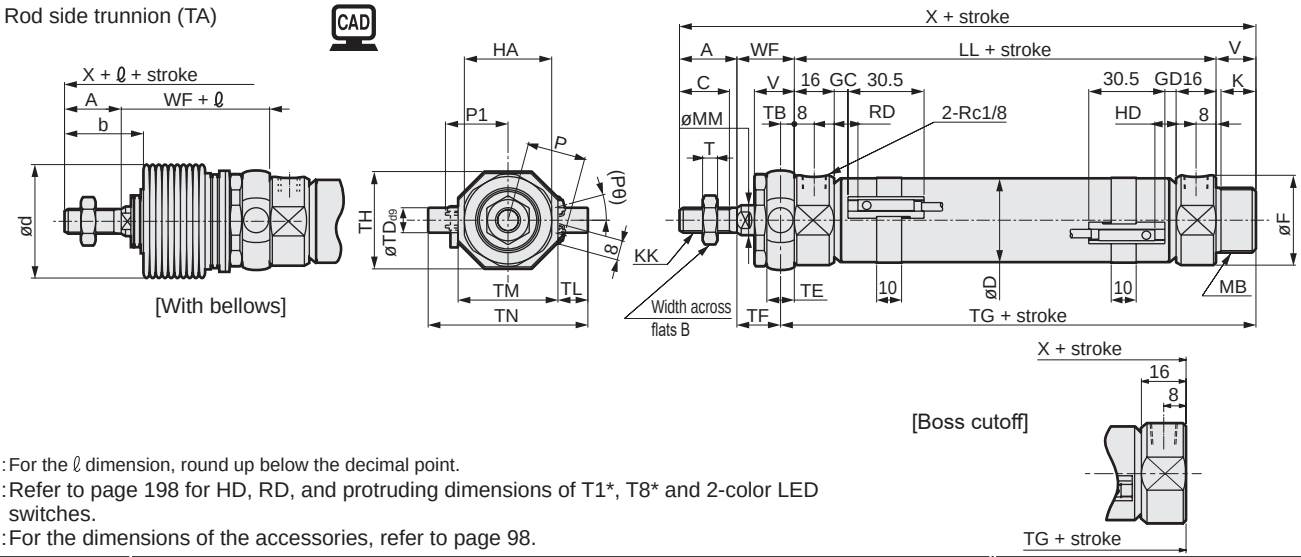

*1 : For the ℓ dimension, round up below the decimal point.
2 : Refer to page 198 for HD, RD, and protruding dimensions of T1, T8* and 2-color LED switches.
*3 : For the dimensions of the accessories, refer to page 98.

Code / Bore size (mm)	Rod side trunnion (TA) Basic dimensions															Mounting dimensions					
	A	B	C	D	F	HA	K	KK	LL	MB	MM	T	V	WF	X	TB	TD	TE	TF	TG	TH
ø20	20	13	18	21.4	28	26	12	M 8x1.0	66	M18x1.5	10	5	14	24	124	4.5	8	9	19.5	84.5	29.5
ø25	23	17	20	26.4	32	35	14	M10x1.25	69	M26x1.5	12	6	16	23	131	5.5	10	11	17.5	90.5	39
ø32	23	17	20	33.6	36	35	14	M10x1.25	69	M26x1.5	12	6	16	23	131	5.5	10	11	17.5	90.5	39
ø40	25	19	22	41.6	45	35	14	M12x1.5	73	M26x1.5	14	7	16	23	137	5.5	10	11	17.5	94.5	44

Code / Bore size (mm)				With switch											With bellows			Boss cutoff	
	TL	TM	TN	T0, T5, T2, T3				T2W, T3W				P	P1	(Pθ)°	b	d	ℓ	X	TG
				GC	GD	RD	HD	GC	GD	RD	HD								
ø20	8	30	46	4	3	8	7	6	5	10	9	17.3	19.5	22	30	30	(Stroke/3) + 6	110	70.5
ø25	12	40	64	5.5	4.5	9.5	8.5	7.5	6.5	11.5	10.5	19.8	22.0	18	32	46	(Stroke/3.25) + 7	115	74.5
ø32	12	40	64	5.5	4.5	9.5	8.5	7.5	6.5	11.5	10.5	24.3	25.5	15	32	46	(Stroke/3.25) + 7	115	74.5
ø40	9.5	53	72	7.5	6.5	11.5	10.5	9.5	8.5	13.5	12.5	28.3	29.5	12	34	46	(Stroke/3.25) + 7	121	78.5

● Rod side trunnion (TA) with bracket (option code B2)

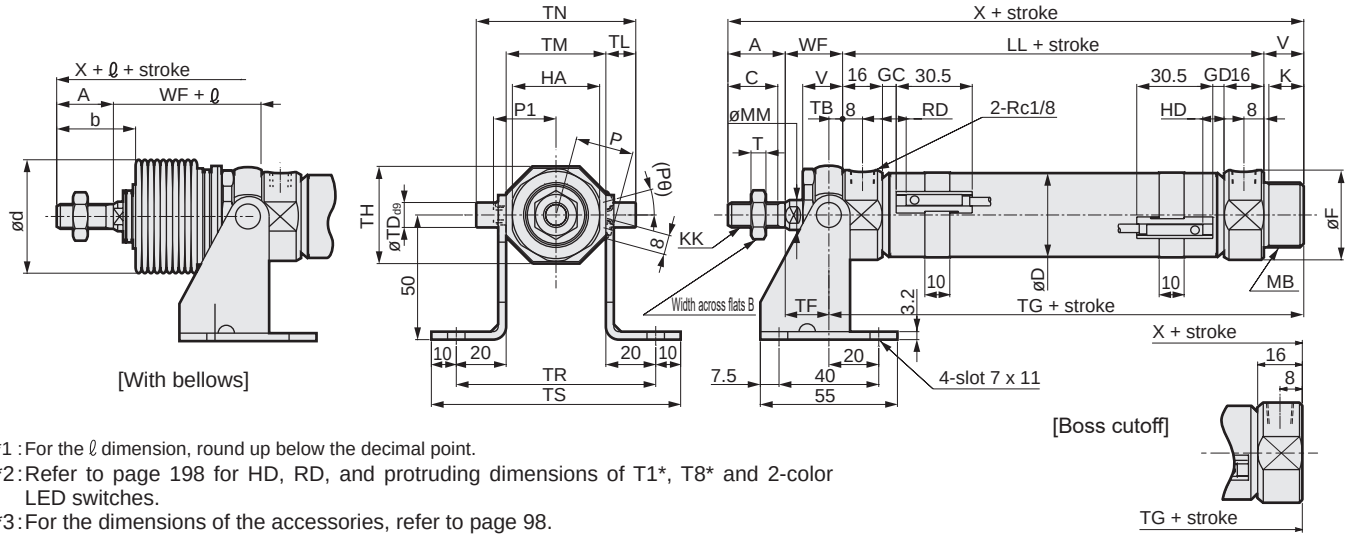

*1 : For the ℓ dimension, round up below the decimal point.
2 : Refer to page 198 for HD, RD, and protruding dimensions of T1, T8* and 2-color LED switches.
*3 : For the dimensions of the accessories, refer to page 98.

Code / Bore size (mm)	Rod side trunnion (TA) with bracket (option code B2) Basic dimensions															Mounting dimensions				
	A	B	C	D	F	HA	K	KK	LL	MB	MM	T	V	WF	X	TB	TD	TF	TG	TH
ø20	20	13	18	21.4	28	26	12	M 8x1.0	66	M18x1.5	10	5	14	24	124	4.5	8	19.5	84.5	29.5
ø25	23	17	20	26.4	32	35	14	M10x1.25	69	M26x1.5	12	6	16	23	131	5.5	10	17.5	90.5	39
ø32	23	17	20	33.6	36	35	14	M10x1.25	69	M26x1.5	12	6	16	23	131	5.5	10	17.5	90.5	39
ø40	25	19	22	41.6	45	35	14	M12x1.5	73	M26x1.5	14	7	16	23	137	5.5	10	17.5	94.5	44

Code / Bore size (mm)						With switch											With bellows			Boss cutoff	
	TL	TM	TN	TR	TS	T0, T5, T2, T3				T2W, T3W				P	P1	(Pθ)°	b	d	ℓ	X	G
						GC	GD	RD	HD	GC	GD	RD	HD								
ø20	8	30	46	70	90	4	3	8	7	6	5	10	9	17.3	19.5	22	30	30	(Stroke/3) + 6	110	70.5
ø25	12	40	64	80	100	5.5	4.5	9.5	8.5	7.5	6.5	11.5	10.5	19.8	22.0	18	32	46	(Stroke/3.25) + 7	115	74.5
ø32	12	40	64	80	100	5.5	4.5	9.5	8.5	7.5	6.5	11.5	10.5	24.3	25.5	15	32	46	(Stroke/3.25) + 7	115	74.5
ø40	9.5	53	72	93	113	7.5	6.5	11.5	10.5	9.5	8.5	13.5	12.5	28.3	29.5	12	34	46	(Stroke/3.25) + 7	121	78.5

Dimensions

● Head side trunnion (TB)

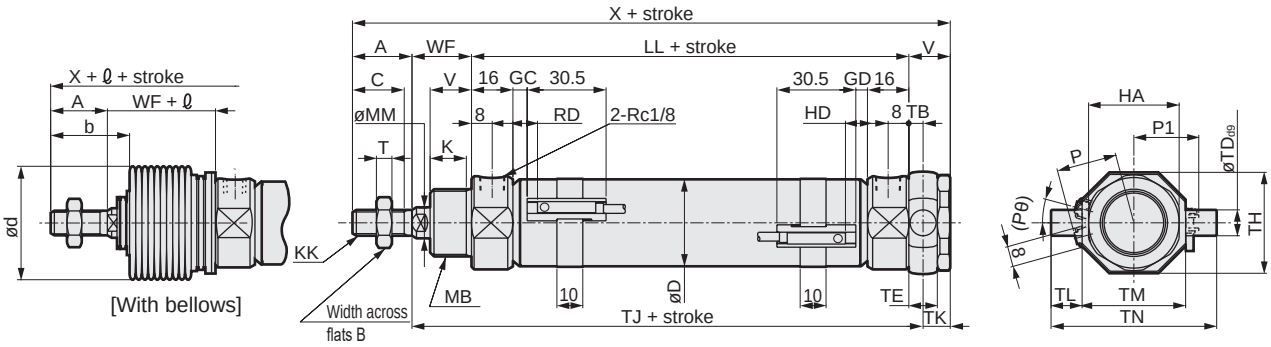

*1 : For the ℓ dimension, round up below the decimal point.
2 : Refer to page 198 for HD, RD, and protruding dimensions of T1, T8* and 2-color LED switches.
*3 : For the dimensions of the accessories, refer to page 98.

Code / Bore size (mm)	Head side trunnion (TB) Basic dimensions														Mounting dimensions				
	A	B	C	D	HA	K	KK	LL	MB	MM	T	V	WF	X	TB	TD	TE	TH	TJ
ø20	20	13	18	21.4	26	12	M 8x1.0	66	M18x1.5	10	5	14	24	124	4.5	8	9	29.5	94.5
ø25	23	17	20	26.4	35	14	M10x1.25	69	M26x1.5	12	6	16	23	131	5.5	10	11	39	97.5
ø32	23	17	20	33.6	35	14	M10x1.25	69	M26x1.5	12	6	16	23	131	5.5	10	11	39	97.5
ø40	25	19	22	41.6	35	14	M12x1.5	73	M26x1.5	14	7	16	23	137	5.5	10	11	44	101.5

Code / Bore size (mm)					With switch											With bellows		
					T0, T5, T2, T3				T2W, T3W									
	TK	TL	TM	TN	GC	GD	RD	HD	GC	GD	RD	HD	P	P1	(Pθ)°	b	d	ℓ
ø20	9.5	8	30	46	4	3	8	7	6	5	10	9	17.3	19.5	22	30	30	(Stroke/3) + 6
ø25	10.5	12	40	64	5.5	4.5	9.5	8.5	7.5	6.5	11.5	10.5	19.8	22.0	18	32	46	(Stroke/3.25) + 7
ø32	10.5	12	40	64	5.5	4.5	9.5	8.5	7.5	6.5	11.5	10.5	24.3	25.5	15	32	46	(Stroke/3.25) + 7
ø40	10.5	9.5	53	72	7.5	6.5	11.5	10.5	9.5	8.5	13.5	12.5	28.3	29.5	12	34	46	(Stroke/3.25) + 7

● Head side trunnion (TB) with bracket (option code B2)

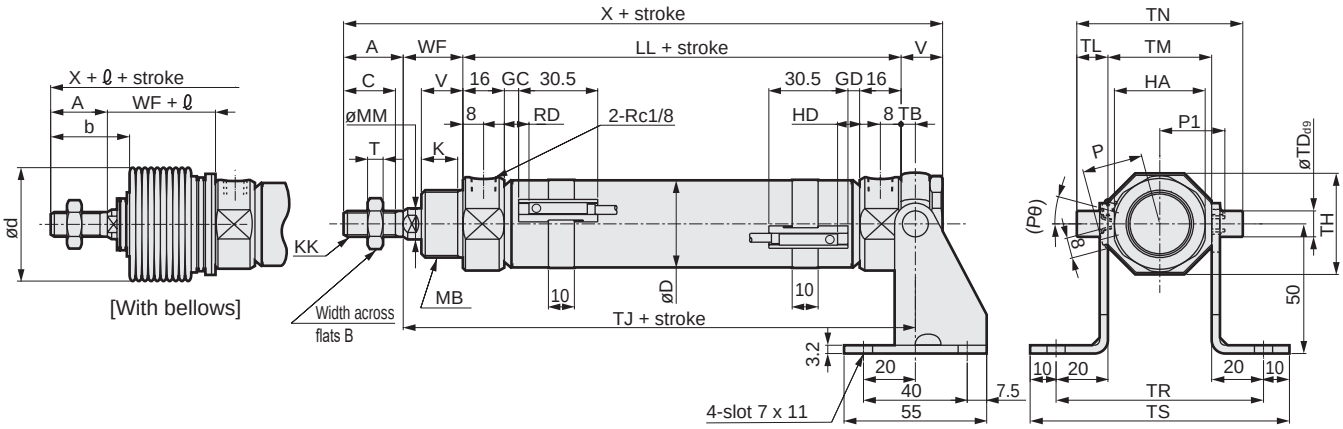

*1 : For the ℓ dimension, round up below the decimal point.
2 : Refer to page 198 for HD, RD, and protruding dimensions of T1, T8* and 2-color LED switches.
*3 : For the dimensions of the accessories, refer to page 98.

Code / Bore size (mm)	Head side trunnion (TB) with bracket (option code B2) Basic dimensions														Mounting dimensions				
	A	B	C	D	HA	K	KK	LL	MB	MM	T	V	WF	X	TB	TD	TH	TJ	TL
ø20	20	13	18	21.4	26	12	M 8x1.0	66	M18x1.5	10	5	14	24	124	4.5	8	29.5	94.5	8
ø25	23	17	20	26.4	35	14	M10x1.25	69	M26x1.5	12	6	16	23	131	5.5	10	39	97.5	12
ø32	23	17	20	33.6	35	14	M10x1.25	69	M26x1.5	12	6	16	23	131	5.5	10	39	97.5	12
ø40	25	19	22	41.6	35	14	M12x1.5	73	M26x1.5	14	7	16	23	137	5.5	10	44	101.5	9.5

Code / Bore size (mm)					With switch											With bellows		
					T0, T5, T2, T3				T2W, T3W									
	TM	TN	TR	TS	GC	GD	RD	HD	GC	GD	RD	HD	P	P1	(Pθ)°	b	d	ℓ
ø20	30	46	70	90	4	3	8	7	6	5	10	9	17.3	19.5	22	30	30	(Stroke/3) + 6
ø25	40	64	80	100	5.5	4.5	9.5	8.5	7.5	6.5	11.5	10.5	19.8	22.0	18	32	46	(Stroke/3.25) + 7
ø32	40	64	80	100	5.5	4.5	9.5	8.5	7.5	6.5	11.5	10.5	24.3	25.5	15	32	46	(Stroke/3.25) + 7
ø40	53	72	93	113	7.5	6.5	11.5	10.5	9.5	8.5	13.5	12.5	28.3	29.5	12	34	46	(Stroke/3.25) + 7

SCP*3
CMK2
CMA2
SCM
SCG
SCA2
SCS2
CKV2
CAV2/COVP/N2
SSD2
SSG
SSD
CAT
MDC2
MVC
SMG
MSD/MSDG
FC*
STK
SRL3
SRG3
SRM3
SRT3
MRL2
MRG2
SM-25
ShkAbs
FJ
FK
Spd Contr
Ending

CMK2 Series common accessory dimensions

● Rod eye (I)

CAD

Material: Steel
Zinc chromate treatment

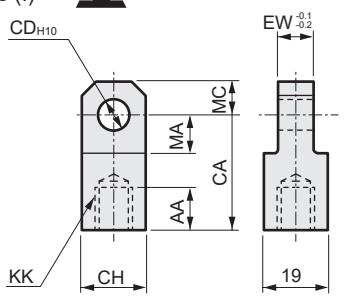

Model No.	Bore size (mm)	AA	CA	CD	CH	EW	KK	MA	MC	Weight (g)
M1-I-20	20	14	30	10	19	8	M8x1.0	13	10	60
M1-I-30	25/32	14	36	12	25	10	M10x1.25	16	12	106
M1-I-40	40	14	36	12	25	10	M12x1.5	16	12	100

● Rod clevis (Y)

CAD

Material: Steel
Zinc chromate treatment

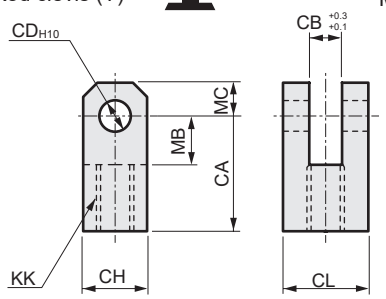

Model No.	Bore size (mm)	CA	CB	CD	CH	CL	KK	MB	MC	Weight (g)
M1-Y-20	20	30	8	10	19	19	M8x1.0	13	10	99
M1-Y-30	25/32	36	10	12	25	25	M10x1.25	16	12	197
M1-Y-40	40	36	10	12	25	25	M12x1.5	16	12	193

Note: A pin and split washer pin are included.

● Clevis bracket (B2)

CAD

Material: Steel, zinc chromate treatment

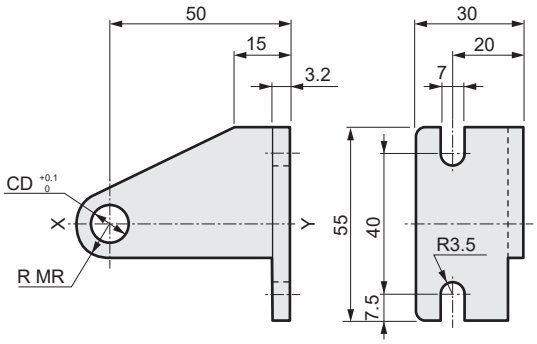

Model No.	Compatible model	Applicable bore size (mm)	CD	MR	Weight (g)
M1-B2-20-CC	CMK2-CC (Eye bracket integrated)	20/25	8	8	145
M1-B2-30-CC		32	10	11	163
M1-B2-40-CC		40	12	11	170
M1-B2-30-CA	CMK2-CA (Eye bracket)	20	10	11	158
M1-B2-40-CA		25/32/40	12	11	162
M1-B2-20-TA	CMK2-TA/TB (Trunnion)	20	8	8	132
M1-B2-30-TA		25/32/40	10	11	142

*1: One pair is composed of two pieces with XY symmetry.
*2: The model No. above includes snap ring and pin. 2 pieces are included in a set. (However, the pin and snap rings are not included with the trunnion.)

● Rod clevis pin (P)

CAD

Material: Steel, zinc chromate treatment

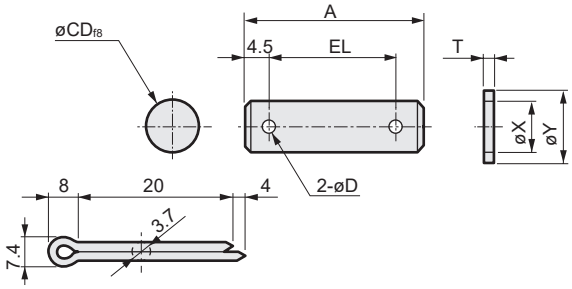

Model No.	Applicable bore size (mm)	A	D	CD	EL	T	X	Y	Weight (g)
M1-P-20	20	37	4	10	28	1.6	10.5	18	29
M1-P-30	25/32/40	46	4	12	37	2.5	12.5	22	50

Note: A pin and split washer pin for rod clevis use are included with the product.

● Clevis bracket pin (P1) (P2)

CAD

Material: Steel
Zinc chromate treatment

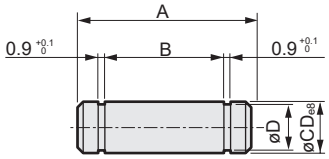

Model No.	Compatible model	Applicable bore size (mm)	A	B	CD	D	Applicable snap ring	Weight (g)
M1-P1-20	CMK2-CC	20/25	33	28	8	7	E 7	13
M1-P1-30		32	33	28	10	9	E 9	21
M1-P1-40		40	37	32	12	9	E 9	32
M1-P2-20	CMK2-CA	20	25	20	10	9	E 9	16
M1-P2-30		25/32/40	27	22	12	9	E 9	24

Note: A pin and snap ring for bracket use are included with the eye bracket integrated.
(However, the pin and snap rings are not included with the trunnion.)

● Rod nut (NR)

Material: Steel
Zinc chromate treatment

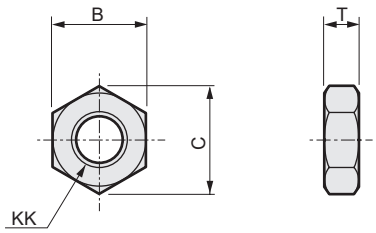

Model No.	Applicable bore size (mm)	B	C	KK	T	Weight (g)
M1-NR-20	20	13	15	M8x1.0	5	3.6
M1-NR-30	25/32	17	19.6	M10x1.25	6	7.8
M1-NR-40	40	19	21.9	M12x1.5	7	10

MEMO

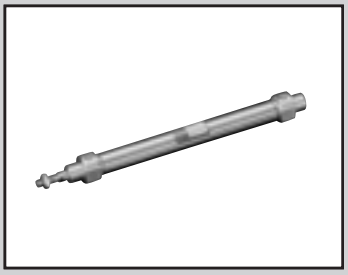

Medium bore size cylinder
Single acting/push

CMK2-S Series

● Bore size: ø20/ø25/ø32/ø40

JIS symbol ● Single acting cylinder/push

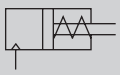

RoHS CAD

Specifications

Item		CMK2-S			
Bore size	mm	ø20	ø25	ø32	ø40
Actuation		Single acting/push			
Working fluid		Compressed air			
Max. working pressure	MPa	1.0 (≈150 psi, 10 bar)			
Min. working pressure	MPa	0.2 (≈29 psi, 2 bar)			
Proof pressure	MPa	1.6 (≈230 psi, 16 bar)			
Ambient temperature	°C	-10 (14°F) to 60 (140°F) (no freezing)			
Port size		Rc1/8			
Stroke tolerance	mm	$^{+2.0}_{0}$(Up to 200), $^{+2.4}_{0}$(More than 200)			
Working piston speed	mm/s	50 to 500			
Cushion		Rubber cushion			
Lubrication		Not required (use turbine oil ISO VG32 if necessary for lubrication)			
Allowable absorbed energy	J	0.166	0.308	0.424	0.639

Note: Do not leave the single acting cylinder pressurized for long periods. If it is left pressurized, the piston rod may not be returned by the spring force when the pressure is released.

Stroke

Bore size (mm)	Standard stroke (mm)	Max. stroke (mm)		Min. stroke (mm)	
		Without bellows	With bellows	Without bellows Bellows "L"	Bellows "J"
ø20	25/50/75/100/150	300	300	5	25
ø25					
ø32	25/50/75/100/150/200				
ø40					

*1: The custom stroke is available in 1 mm increments.
*2: Single foot (LS) has the max. stroke of 50 mm.
*3: Contact CKD when stroke shorter than 25 mm is necessary for "J" bellows.

Min. stroke with switch

(Unit: mm)

Switch quantity	1					2					3				
	Proximity			Reed		Proximity			Reed		Proximity			Reed	
Bore size (mm)	T2, T3	T2W, T3W	T1, T*Y*	T0, T5	T8	T2, T3	T2W, T3W	T1, T*Y*	T0, T5	T8	T2, T3	T2W, T3W	T1, T*Y*	T0, T5	T8
ø20	10					25	30	35	25	35	50	55	55	50	55
ø25	10					25	30	35	25	35	50	55	55	50	55
ø32	10					25	30	35	25	35	50	55	55	50	55
ø40	10					25	30	35	25	35	50	55	55	50	55

*1: Up to 3 switches can be mounted.

Switch specifications

● 1-color/2-color LED

Item	2-wire proximity	2-wire proximity			3-wire proximity				2-wire reed						
	T1H/T1V	T2H/T2V/ T2JH/T2JV	T2YH/ T2YV	T2WH/ T2WV	T3H/ T3V	T3PH/ T3PV	T3YH/ T3YV	T3WH/ T3WV	T0H/T0V		T5H/T5V		T8H/T8V		
Applications	For programming controller, relay, compact solenoid valve	Dedicated for programmable controller			For programmable controller, relay				For programmable controller, relay		For programmable controller, relay, IC circuit (without indicator lamp), serial connection		For programmable controller, relay		
Output method	-				NPN output	PNP output	NPN output	NPN output	-						
Pwr. supp. V.	-				10 to 28 VDC				-						
Load voltage	85 to 265 VAC	10 to 30 VDC		24 VDC ±10%	30 VDC or less				12/24 VDC	100/110 VAC	5/12/24 VDC	100/110 VAC	12/24 VDC	110 VAC	220 VAC
Load current	5 to 100 mA	5 to 20 mA (*3)			100 mA or less		50 mA or less		5 to 50 mA	7 to 20 mA	50 mA or less	20 mA or less	5 to 50 mA	7 to 20 mA	7 to 10 mA
Indicator	LED (Lit when ON)	LED (Lit when ON)	Red/green LED (Lit when ON)	Red/green LED (Lit when ON)	LED (Lit when ON)	Yellow LED (Lit when ON)	Red/green LED (Lit when ON)	Red/green LED (Lit when ON)	LED (Lit when ON)		No indicator lamp		LED (Lit when ON)		
Leakage current	≤ 1 mA at 100 VAC, ≤ 2 mA at 200 VAC	1 mA or less			10 μA or less				0 mA						
Weight g	1 m:33 3 m:87 5 m:142	1 m:18 3 m:49 5 m:80	1 m:33 3 m:87 5 m:142	1 m:18 3 m:49 5 m:80	1 m:18 3 m:49 5 m:80		1 m:33 3 m:87 5 m:142	1 m:18 3 m:49 5 m:80	1 m:18 3 m:49 5 m:80				1 m:33 3 m:87 5 m:142		

*1: Refer to Ending Page 1 for detailed switch specifications and dimensions.
*2: Switches other than the above models, such as switches with connectors, are also available. Refer to Ending Page 1.
*3: The max. load current is 20 mA at 25°C. The current is lower than 20 mA if the operating ambient temperature around the switch is higher than 25˚C. (5 to 10 mA at 60°C)

Cylinder weight

(Unit: kg)

Item/mounting / Bore size (mm)	Product weight when stroke (S) = 0 mm								Switch weight (per 1 pc)	Switch rail + band weight	Additional weight per S = 10 mm
	Basic (00)	Axial foot (LB)	Axial foot (LS)	Flange (FA/FB)	Eye bracket (CA)	Clevis (CC)	Clevis bracket (CB)	Trunnion (TA/TB)			
ø20	0.17	0.32	0.25	0.23	0.32	0.18	0.32	0.22	Refer to the weight in the switch specifications.	0.005	0.01
ø25	0.26	0.52	0.39	0.41	0.50	0.26	0.50	0.36		0.005	0.01
ø32	0.30	0.56	0.43	0.45	0.54	0.30	0.54	0.40		0.009	0.02
ø40	0.48	0.74	0.61	0.63	0.72	0.50	0.72	0.64		0.009	0.02

Item/mounting / Bore size (mm)	Stroke (S) additional weight							
	25 or less	Over 25 to 50	Over 50 to 75	Over 75 to 100	Over 100 to 150	Over 150 to 200	Over 200 to 250	Over 250 to 300
ø20	0.04	0.05	0.09	0.09	0.14	0.18	0.23	0.27
ø25	0.05	0.06	0.12	0.12	0.18	0.24	0.29	0.35
ø32	0.09	0.11	0.23	0.22	0.32	0.43	0.53	0.64
ø40	0.13	0.16	0.31	0.31	0.47	0.62	0.78	0.93

(Example) Product weight of CMK2-S-FA-32-50-T0H-D

Product weight when S = 0 mm .. 0.45 kg
Additional weight when S = 50mm .....Additional weight when S = 10 mm 0.02 x $\frac{\text{Product stroke (50)}}{10}$ = 0.10 kg
Additional weight per S..... 0.11 kg
Weight of 2 switches ..... 0.036 kg
Weight of switch rail + 2 bands ... 0.018 kg
Product weight ..... 0.45 kg+0.10 kg+0.10 kg+0.036 kg+0.018 kg=0.704 kg

Theoretical thrust table

(Unit: N)

Bore size (mm)	Working pressure MPa								
	0.2	0.3	0.4	0.5	0.6	0.7	0.8	0.9	1.0
ø20	25	56	88	1.19×10^2	1.50×10^2	1.82×10^2	2.13×10^2	2.45×10^2	2.76×10^2
ø25	58	1.07×10^2	1.56×10^2	2.05×10^2	2.55×10^2	3.04×10^2	3.53×10^2	4.02×10^2	4.51×10^2
ø32	1.06×10^2	1.86×10^2	2.67×10^2	3.47×10^2	4.28×10^2	5.08×10^2	5.88×10^2	6.69×10^2	7.49×10^2
ø40	1.51×10^2	2.77×10^2	4.03×10^2	5.28×10^2	6.54×10^2	7.80×10^2	9.10×10^2	1.03×10^3	1.16×10^3

Note: The load above indicates thrust excluding the spring force at the push end.

SCP*3
CMK2
CMA2
SCM
SCG
SCA2
SCS2
CKV2
CAV2/ COVP/N2
SSD2
SSG
SSD
CAT
MDC2
MVC
SMG
MSD/ MSDG
FC*
STK
SRL3
SRG3
SRM3
SRT3
MRL2
MRG2
SM-25
ShkAbs
FJ
FK
Spd Contr
Ending

How to order

No switch (built-in magnet for switch)

CMK2-S - 00 - 20 ◯ - 100 ——— M I

With switch (built-in magnet for switch)

CMK2-S - 00 - 20 ◯ - 100 - T0H - R - M I

Ⓐ Mounting *1

Ⓑ Bore size

Ⓒ Port thread

Ⓓ Stroke

Ⓔ Switch model No.

Ⓕ Switch quantity *8

Ⓖ Option *3, *4

Ⓗ Accessory *5

Code	Description
Ⓐ Mounting	
00	Basic
LB	Axial foot (Two sides)
LS	Axial foot (One side)
FA	Rod side flange
FB	Head side flange
CA	Eye bracket
CC	Eye bracket integrated
CC1	Eye bracket, bush pressfit
CB	Clevis bracket (pin and split washer pin included)
TA	Rod side trunnion
TB	Head side trunnion

Ⓑ Bore size (mm)

20	ø20	*9
25	ø25	*9
32	ø32	
40	ø40	

Ⓒ Port thread

Blank	Rc thread
NN	NPT thread (made-to-order product)
GN	G thread (made-to-order product)

Ⓓ Stroke (mm)

Bore size	Stroke *2	Custom stroke
ø20	**5 to 300**	**In 1 mm increments**
ø25	**5 to 300**	
ø32	**5 to 300**	
ø40	**5 to 300**	

Ⓔ Switch model No.

Axial lead wire	Radial lead wire	Contact	Voltage AC	Voltage DC	Indicator	Lead wire
T0H*	**T0V***	Reed	●	●	1-color LED	2-wire
T5H*	**T5V***	Reed	●	●	No indicator lamp	2-wire
T8H*	**T8V***	Reed	●	●	1-color LED	2-wire
T1H*	**T1V***	Proximity	●		1-color LED	2-wire
T2H*	**T2V***	Proximity		●	1-color LED	2-wire
T3H*	**T3V***	Proximity		●	1-color LED	3-wire
T3PH*	**T3PV***	Proximity		●	1-color LED	3-wire
T2WH*	**T2WV***	Proximity		●	2-color LED	2-wire
T2YH*	**T2YV***	Proximity		●	2-color LED	2-wire
T3WH*	**T3WV***	Proximity		●	2-color LED	3-wire
T3YH*	**T3YV***	Proximity		●	2-color LED	3-wire
T2JH*	**T2JV***	Proximity		●	1-color LED off-delay	2-wire

*** Lead wire length**

Blank	1 m (standard)
3	3 m (option)
5	5 m (option)

Ⓕ Switch quantity

R	1 on rod side
H	1 on head side
D	2
T	3

Ⓖ Option

		Max. ambient temp.	Instantaneous max. temp.
J	Bellows	100°C	200°C
L	Bellows	250°C	400°C
F	With push-in fitting (straight)		
FE	With push-in fitting (elbow)		
M	Piston rod material (stainless steel) *9		
V	Boss cutoff		
P6	Copper and PTFE free		

Ⓗ Accessory

I	Rod eye
Y	Rod clevis (pin and split washer pin included)
B2	Clevis bracket (pin and snap ring included)

⚠ Precautions for model No. selection

*1 : One side foot (LS) has the max. stroke of 50 mm.
*2 : For the min. stroke with switch and the max. and min. strokes with bellows, refer to page 100.
*3 : The compatible tube O.D. of F (with push-in fitting (straight)) and FE (with push-in fitting (elbow)) is ø6.
*4 : The instantaneous max. temperature is the temperature when sparks and cutting chips, etc., instantaneously contact the bellows.
*5 : "I" and "Y" cannot be selected together.
*6 : Refer to Ending Page 85 for custom specifications of rod end form.
*7 : Refer to page 84 for combination of variations/ options.
*8 : Up to three switches can be installed. If four or more switches are required, switch mounting brackets for the extra switches must be prepared separately.
*9 : For 20 or 25 bore size, the rod is stainless steel as standard and the rod nut is zinc chromate. If a stainless steel rod nut is necessary, select the "M" option code.

[Example of model No.]

CMK2-S-00-20-100-T0H-R-MI

Model: Medium bore size cylinder, single acting/push

Ⓐ Mounting	: Basic
Ⓑ Bore size	: ø20 mm
Ⓒ Port thread	: Rc thread
Ⓓ Stroke	: 100 mm
Ⓔ Switch model No.	: Reed T0H switch, lead wire 1m
Ⓕ Switch quantity	: 1 on rod side
Ⓖ Option	: Piston rod material (stainless steel)
Ⓗ Accessory	: Rod eye

How to order switch

● Switch body + mounting bracket set

CMK2 - T0H - 20

Switch model No. (Item Ⓔ on page 102)

Bore size (Item Ⓑ on page 102)

● Switch body only

SW - T0H

Switch model No. (Item Ⓔ on page 102)

● Mounting bracket set

CMK2 - T - 20

Mounting bracket

Bore size (Item Ⓑ on page 102)

How to order mounting bracket

Bore size (mm) / Mounting bracket	ø20	ø25	ø32	ø40
Basic (00) *3	M1-00-20	M1-00-30	M1-00-30	M1-00-30
Axial foot (LB/LS)	M1-LB-20	M1-LB-30	M1-LB-30	M1-LB-30
Flange (FA/FB)	M1-FA-20	M1-FA-30	M1-FA-30	M1-FA-30
Trunnion (TA/TB)	M1-TA-20	M1-TA-30	M1-TA-30	M1-TA-40
Eye bracket (CA)	M1-CA-20	M1-CA-30	M1-CA-30	M1-CA-30
Clevis bracket (CB)	M1-CB-20	M1-CB-30	M1-CB-30	M1-CB-30

*1: Regarding mounting brackets, mounting nuts and toothed washers are supplied with the axial foot and flange. The trunnion includes mounting nuts.
2: For axial foot (two-sided), 2 sets of “M1-LB-” in the table above are required.
*3: Mounting nut, toothed washer only. Although 1 set is included with the basic of the product (00), use this when needed.

Internal structure and parts list

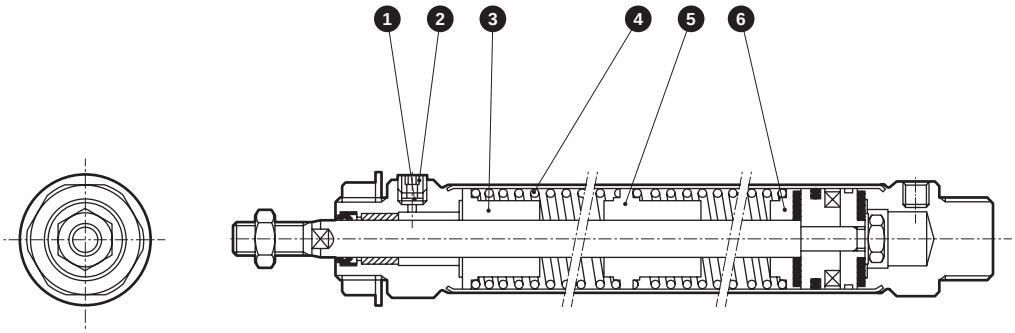

Cannot be disassembled

● Note: This product is caulked and cannot be disassembled.

No.	Part name	Material	Remarks	No.	Part name	Material	Remarks
1	Stainless steel wire mesh	Stainless steel		4	Spring	Piano wire	Paint
2	Plug	Steel	Zinc chromate	5	Spring holder	Special aluminum	
3	Spring holder	Special aluminum		6	Spring holder	Special aluminum	

Spring load

(Unit: N)

Bore size (mm)	Stroke (mm)	25	50	75	100	150	200	250	300
ø20	At stroke of 0 mm	11.9	11.8	11.8	11.8	11.8	11.8	11.8	11.8
	At full stroke operation	31	38	31.5	38	38	38	38	38
ø25	At stroke of 0 mm	12.1	12.5	12.5	12.5	12.5	12.5	12.5	12.5
	At full stroke operation	30.4	40.2	33.1	40.2	40.2	40.2	40.2	40.2
ø32	At stroke of 0 mm	24.5	24.3	24.5	24.3	24.3	24.3	24.3	24.3
	At full stroke operation	52.9	54.9	54.9	54.9	54.9	54.9	54.9	54.9
ø40	At stroke of 0 mm	28.4	28.4	28.4	28.4	28.4	28.4	28.4	28.4
	At full stroke operation	78.4	100	82.3	100	100	100	100	100

Dimensions

● Basic (00)

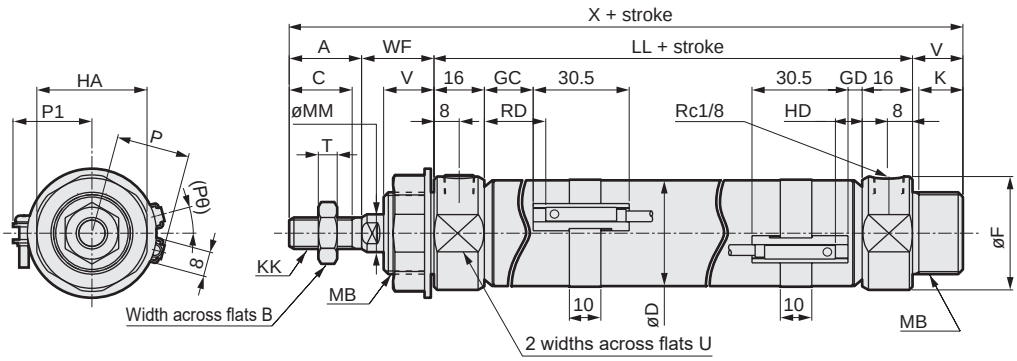

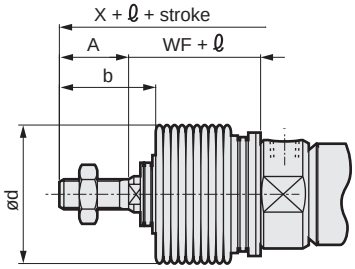

[With bellows]

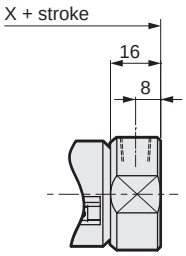

[Boss cutoff]

RD: Rod side max. sensitivity position
HD: Head side max. sensitivity position

*1 : Dimensions of other mountings are the same as those of the standard. Refer to pages 92 to 97.
2 : Refer to page 198 for HD, RD, and protruding dimensions of T1, T8* and 2-color LED switches.
*3 : For the ℓ dimension, round up below the decimal point.

Code / Bore size (mm)	Basic (00) Basic dimensions																	
	A	B	C	D	F	HA	K	KK	LL 25 or less	LL Over 25 to 50	LL Over 50 to 100	LL Over 100 to 150	LL Over 150 to 200	LL Over 200 to 250	LL Over 250 to 300	MB	MM	T
ø20	20	13	18	21.4	28	26	12	M 8x1.0	91	93	120	147	174	201	228	M18x1.5	10	5
ø25	23	17	20	26.4	32	35	14	M10x1.25	94	99	129	159	189	219	249	M26x1.5	12	6
ø32	23	17	20	33.6	36	35	14	M10x1.25	94	99	129	159	189	219	249	M26x1.5	12	6
ø40	25	19	22	41.6	45	35	14	M12x1.5	98	103	133	163	193	223	253	M26x1.5	14	7

Code / Bore size (mm)											With switch								
	U	V	WF	X 25 or less	X Over 25 to 50	X Over 50 to 100	X Over 100 to 150	X Over 150 to 200	X Over 200 to 250	X Over 250 to 300	T0, T5, T2, T3 GC	T0, T5, T2, T3 GD	T0, T5, T2, T3 HD	T2W, T3W GC	T2W, T3W GD	T2W, T3W HD	RD T0, T5, T2, T3 25 or less	RD T0, T5, T2, T3 Over 25 to 50	RD T0, T5, T2, T3 Over 50 to 75
ø20	24	14	24	149	151	178	205	232	259	256	4	3	7	6	5	9	33	35	62
ø25	30	16	23	156	161	191	221	251	281	311	5.5	4.5	8.5	7.5	6.5	10.5	34.5	39.5	69.5
ø32	34	16	23	156	161	191	221	251	281	311	5.5	4.5	8.5	7.5	6.5	10.5	34.5	39.5	69.5
ø40	43	16	23	162	167	197	227	257	287	317	7.5	6.5	10.5	9.5	8.5	12.5	36.5	41.5	71.5

Code / Bore size (mm)	With switch																With bellows	
	RD T0, T5, T2, T3 Over 75 to 100	RD T0, T5, T2, T3 Over 100 to 150	RD T0, T5, T2, T3 Over 150 to 200	RD T0, T5, T2, T3 Over 200 to 250	RD T0, T5, T2, T3 Over 250 to 300	RD T2W, T3W 25 or less	RD T2W, T3W Over 25 to 50	RD T2W, T3W Over 50 to 75	RD T2W, T3W Over 75 to 100	RD T2W, T3W Over 100 to 150	RD T2W, T3W Over 150 to 200	RD T2W, T3W Over 200 to 250	RD T2W, T3W Over 250 to 300	P	P1	(Pθ)°	b	d
ø20	62	89	116	143	170	35	37	64	64	91	118	145	172	17.3	19.5	22	30	30
ø25	69.5	99.5	129.5	159.5	189.5	36.5	41.5	71.5	71.5	101.5	131.5	161.5	191.5	19.8	22.0	18	32	46
ø32	69.5	99.5	129.5	159.5	189.5	36.5	41.5	71.5	71.5	101.5	131.5	161.5	191.5	24.3	25.5	15	32	46
ø40	71.5	101.5	131.5	161.5	191.5	38.5	43.5	73.5	73.5	103.5	133.5	163.5	193.5	28.3	29.5	12	34	46

Code / Bore size (mm)	With bellows	Boss cutoff type						
	ℓ	X 25 or less	X Over 25 to 50	X Over 50 to 100	X Over 100 to 150	X Over 150 to 200	X Over 200 to 250	X Over 250 to 300
ø20	(Stroke/3) + 6	135	137	164	191	218	245	242
ø25	(Stroke/3.25) + 7	140	145	175	205	235	265	295
ø32	(Stroke/3.25) + 7	140	145	175	205	235	265	295
ø40	(Stroke/3.25) + 7	146	151	181	211	241	271	301

* For the dimensions of the accessories, refer to page 98.

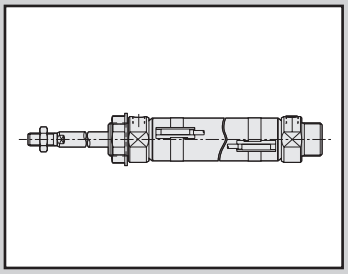

Medium bore size cylinder
Single acting/pull

CMK2-SR Series

● Bore size: ø20/ø25/ø32/ø40

JIS symbol ● Single acting cylinder/ pull type

RoHS CAD

Specifications

Item		CMK2-SR			
Bore size	mm	ø20	ø25	ø32	ø40
Actuation		Single acting/pull			
Working fluid		Compressed air			
Max. working pressure	MPa	1.0 (≈150 psi, 10 bar)			
Min. working pressure	MPa	0.2 (≈29 psi, 2 bar)			
Proof pressure	MPa	1.6 (≈230 psi, 16 bar)			
Ambient temperature	°C	-10 (14°F) to 60 (140°F) (no freezing)			
Port size		Rc1/8			
Stroke tolerance	mm	$^{+2.0}_{0}$(Up to 200), $^{+2.4}_{0}$(More than 200)			
Working piston speed	mm/s	50 to 500			
Cushion		Rubber cushion			
Lubrication		Not required (use turbine oil ISO VG32 if necessary for lubrication)			
Allowable absorbed energy	J	0.166	0.308	0.424	0.639

Note: Do not leave the single acting cylinder pressurized for long periods. If it is left pressurized, the piston rod may not be returned by the spring force when the pressure is released.

Stroke

Bore size (mm)	Standard stroke (mm)	Max. stroke (mm)		Min. stroke (mm)	
		Without bellows	With bellows	Without bellows Bellows "L"	Bellows "J"
ø20	25/50/75/100/150	300	300	5	25
ø25					
ø32	25/50/75/100/150/200				
ø40					

*1: The custom stroke is available in 1 mm increments.
*2: One side foot (LS) has the max. stroke of 50 mm.
*3: Contact CKD when stroke shorter than 25 mm is necessary for "J" bellows.

Min. stroke with switch

(Unit: mm)

Switch quantity	1					2					3				
	Proximity			Reed		Proximity			Reed		Proximity			Reed	
Bore size (mm)	T2, T3	T2W, T3W	T1, T*Y*	T0, T5	T8	T2, T3	T2W, T3W	T1, T*Y*	T0, T5	T8	T2, T3	T2W, T3W	T1, T*Y*	T0, T5	T8
ø20	10					25	30	35	25	35	50	55	55	50	55
ø25	10					25	30	35	25	35	50	55	55	50	55
ø32	10					25	30	35	25	35	50	55	55	50	55
ø40	10					25	30	35	25	35	50	55	55	50	55

*1: Up to 3 switches can be mounted.

Switch specifications

● 1-color/2-color LED

Item	2-wire proximity	2-wire proximity			3-wire proximity				2-wire reed						
	T1H/T1V	T2H/T2V/ T2JH/T2JV	T2YH/ T2YV	T2WH/ T2WV	T3H/ T3V	T3PH/ T3PV	T3YH/ T3YV	T3WH/ T3WV	T0H/T0V	T5H/T5V		T8H/T8V			
Applications	For programming controller, relay, compact solenoid valve	Dedicated for programmable controller			For programmable controller, relay				For programmable controller, relay	For programmable controller, relay, IC circuit (without indicator lamp), serial connection		For programmable controller, relay			
Output method	-				NPN output	PNP output	NPN output	NPN output	-						
Pwr. supp. V.	-				10 to 28 VDC				-						
Load voltage	85 to 265 VAC	10 to 30 VDC		24 VDC ±10%	30 VDC or less				12/24 VDC	100/110 VAC	5/12/24 VDC	100/110 VAC	12/24 VDC	110 VAC	220 VAC
Load current	5 to 100 mA	5 to 20 mA (*3)			100 mA or less		50 mA or less		5 to 50 mA	7 to 20 mA	50 mA or less	20 mA or less	5 to 50 mA	7 to 20 mA	7 to 10 mA
Indicator	LED (Lit when ON)	LED (Lit when ON)	Red/green LED (Lit when ON)	Red/green LED (Lit when ON)	LED (Lit when ON)	Yellow LED (Lit when ON)	Red/green LED (Lit when ON)	Red/green LED (Lit when ON)	LED (Lit when ON)		No indicator lamp		LED (Lit when ON)		
Leakage current	≤ 1 mA at 100 VAC, ≤ 2 mA at 200 VAC	1 mA or less			10 μA or less				0 mA						
Weight g	1 m:33 3 m:87 5 m:142	1 m:18 3 m:49 5 m:80	1 m:33 3 m:87 5 m:142	1 m:18 3 m:49 5 m:80	1 m:18 3 m:49 5 m:80		1 m:33 3 m:87 5 m:142	1 m:18 3 m:49 5 m:80	1 m:18 3 m:49 5 m:80				1 m:33 3 m:87 5 m:142		

*1: Refer to Ending Page 1 for detailed switch specifications and dimensions.
*2: Switches other than the above models, such as switches with connectors, are also available. Refer to Ending Page 1.
*3: The max. load current is 20 mA at 25°C. The current is lower than 20 mA if the operating ambient temperature around the switch is higher than 25°C. (5 to 10 mA at 60°C)

Cylinder weight

(Unit: kg)

Item/mounting / Bore size (mm)	Product weight when stroke (S) = 0 mm								Switch weight (per 1 pc.)	Switch rail + band weight	Additional weight per S = 10 mm
	Basic (00)	Axial foot (LB)	Axial foot (LS)	Flange (FA/FB)	Eye bracket (CA)	Clevis (CC)	Clevis bracket (CB)	Trunnion (TA/TB)			
ø20	0.17	0.32	0.25	0.23	0.32	0.18	0.32	0.22	Refer to the weight in the switch specifications.	0.005	0.01
ø25	0.26	0.52	0.39	0.41	0.50	0.26	0.50	0.36		0.005	0.01
ø32	0.30	0.56	0.43	0.45	0.54	0.30	0.54	0.40		0.009	0.02
ø40	0.48	0.74	0.61	0.63	0.72	0.50	0.72	0.64		0.009	0.02

Item/mounting / Bore size (mm)	Stroke (S) additional weight							
	25 or less	Over 25 to 50	Over 50 to 75	Over 75 to 100	Over 100 to 150	Over 150 to 200	Over 200 to 250	Over 250 to 300
ø20	0.03	0.03	0.06	0.06	0.09	0.12	0.15	0.18
ø25	0.03	0.04	0.07	0.07	0.11	0.14	0.18	0.21
ø32	0.08	0.09	0.18	0.17	0.25	0.34	0.42	0.51
ø40	0.10	0.13	0.25	0.25	0.37	0.49	0.62	0.74

(Example) Product weight of CMK2-SR-FA-32-50-T0H-D

Product weight when S = 0 mm .. 0.45 kg
Additional weight when S = 50mm .....Additional weight when S = 10 mm $0.02 \times \frac{\text{Product stroke (50)}}{10}$ =0.10 kg
Additional weight per S ..... 0.09 kg
Weight of 2 switches ..... 0.036 kg
Weight of switch rail + 2 bands ... 0.018 kg
Product weight ..... 0.45 kg+0.09 kg+0.10 kg+0.036 kg+0.018 kg=0.694 kg

Theoretical thrust table

(Unit: N)

Bore size (mm)	Working pressure MPa								
	0.2	0.3	0.4	0.5	0.6	0.7	0.8	0.9	1.0
ø20	9	33	56	80	1.03×10^2	1.27×10^2	1.50×10^2	1.74×10^2	1.98×10^2
ø25	35	73	1.11×10^2	1.49×10^2	1.87×10^2	2.24×10^2	2.62×10^2	3.00×10^2	3.38×10^2
ø32	83	1.52×10^2	2.21×10^2	2.91×10^2	3.60×10^2	4.29×10^2	4.98×10^2	5.67×10^2	6.36×10^2
ø40	1.21×10^2	2.31×10^2	3.41×10^2	4.51×10^2	5.62×10^2	6.72×10^2	7.82×10^2	8.92×10^2	1.00×10^3

Note: The load above indicates thrust excluding the spring force at the pull end.

How to order

No switch (built-in magnet for switch)

CMK2-SR - 00 - 20 ( ) - 25 ——— I

With switch (built-in magnet for switch)

CMK2-SR - 00 - 20 ( ) - 25 - T0H - R - M I

Ⓐ Mounting *1

Ⓑ Bore size

Ⓒ Port thread

Ⓓ Stroke

Ⓔ Switch model No.

Ⓕ Switch quantity *8

Ⓖ Option *3 *4

Ⓗ Accessory *5

Code	Description
Ⓐ Mounting	
00	Basic
LB	Axial foot (Both sides)
LS	Axial foot (One side)
FA	Rod side flange
FB	Head side flange
CA	Eye bracket
CC	Eye bracket integrated
CC1	Eye bracket, bush pressfit type
CB	Clevis bracket (pin and split washer pin included)
TA	Rod side trunnion
TB	Head side trunnion

Ⓑ Bore size (mm)

20	ø20	*9
25	ø25	*9
32	ø32	
40	ø40	

Ⓒ Port thread

Blank	Rc thread
NN	NPT thread (made-to-order product)
GN	G thread (made-to-order product)

Ⓓ Stroke (mm)

Bore size	Stroke *2	Custom stroke
ø20	**5 to 300**	**In 1 mm increments**
ø25	**5 to 300**	
ø32	**5 to 300**	
ø40	**5 to 300**	

Ⓔ Switch model No.

Axial lead wire	Radial lead wire	Contact	Voltage AC	Voltage DC	Indicator	Lead wire
T0H*	**T0V***	Reed	●	●	1-color LED	2-wire
T5H*	**T5V***	Reed	●	●	No indicator lamp	2-wire
T8H*	**T8V***	Reed	●	●	1-color LED	2-wire
T1H*	**T1V***	Prox.	●		1-color LED	2-wire
T2H*	**T2V***	Prox.		●	1-color LED	2-wire
T3H*	**T3V***	Prox.		●	1-color LED	3-wire
T3PH*	**T3PV***	Prox.		●	1-color LED	3-wire
T2WH*	**T2WV***	Prox.		●	2-color LED	2-wire
T2YH*	**T2YV***	Prox.		●	2-color LED	2-wire
T3WH*	**T3WV***	Prox.		●	2-color LED	3-wire
T3YH*	**T3YV***	Prox.		●	2-color LED	3-wire
T2JH*	**T2JV***	Prox.		●	1-color LED off-delay	2-wire

*** Lead wire length**

Blank	1 m (standard)
3	3 m (option)
5	5 m (option)

Ⓕ Switch quantity

R	1 on rod side
H	1 on head side
D	2
T	3

Ⓖ Option

		Max. ambient temp.	Instantaneous max. temp.
J	Bellows	100°C	200°C
L	Bellows	250°C	400°C
F	With push-in fitting (straight)		
FE	With push-in fitting (elbow)		
M	Piston rod material (stainless steel) *9		
V	Boss cutoff		
P6	Copper and PTFE free		

Ⓗ Accessory

I	Rod eye
Y	Rod clevis (pin and split washer pin included)
B2	Clevis bracket (pin and snap ring included)

⚠ Precautions for model No. selection

*1 : One side foot (LS) has the max. stroke of 50 mm.
*2 : For the min. stroke with switch and the max. and min. strokes with bellows, refer to page 106.
*3 : The compatible tube O.D. of F (with push-in fitting (straight)) and FE (with push-in fitting (elbow)) is ø6.
*4 : The instantaneous max. temperature is the temperature when sparks and cutting chips, etc., instantaneously contact the bellows.
*5 : "I" and "Y" cannot be selected together.
*6 : Refer to Ending Page 85 for custom specifications of rod end form.
*7 : Refer to page 84 for combination of variations/options.
*8 : Up to three switches can be installed. If four or more switches are required, switch mounting brackets for the extra switches must be prepared separately.
*9 : For 20 or 25 bore size, the rod is stainless steel as standard and the rod nut is zinc chromate. If a stainless steel rod nut is necessary, select the "M" option code.

[Example of model No.]

CMK2-SR-00-20-100-T0H-R-MI

Model: Medium bore size cylinder, single acting/pull

Ⓐ Mounting	: Basic
Ⓑ Bore size	: ø20 mm
Ⓒ Port thread	: Rc thread
Ⓓ Stroke	: 100 mm
Ⓔ Switch model No.	: Reed T0H switch, lead wire 1m
Ⓕ Switch quantity	: 1 on rod side
Ⓖ Option	: Piston rod material (stainless steel)
Ⓗ Accessory	: Rod eye

How to order switch

● Switch body + mounting bracket set

CMK2 - T0H - 20

Bore size
(Item Ⓑ on page 108)

Switch model No.
(Item Ⓔ on page 108)

● Switch body only

SW - T0H

Switch model No.
(Item Ⓔ on page 108)

● Mounting bracket set

CMK2 - T - 20

Bore size
(Item Ⓑ on page 108)

Mounting bracket

How to order mounting bracket

Bore size (mm) / Mounting bracket	ø20	ø25	ø32	ø40
Basic (00) *3	M1-00-20	M1-00-30	M1-00-30	M1-00-30
Axial foot (LB/LS)	M1-LB-20	M1-LB-30	M1-LB-30	M1-LB-30
Flange (FA/FB)	M1-FA-20	M1-FA-30	M1-FA-30	M1-FA-30
Trunnion (TA/TB)	M1-TA-20	M1-TA-30	M1-TA-30	M1-TA-40
Eye bracket (CA)	M1-CA-20	M1-CA-30	M1-CA-30	M1-CA-30
Clevis bracket (CB)	M1-CB-20	M1-CB-30	M1-CB-30	M1-CB-30

*1: Regarding mounting brackets, mounting nuts and toothed washers are supplied with the axial foot and flange. The trunnion includes mounting nuts.
2: For axial foot (two-sided), 2 sets of “M1-LB-” in the table above are required.
*3: Mounting nut, toothed washer only. Although 1 set is included with the basic of the product (00), use this when needed.

Internal structure and parts list

● CMK2-SR

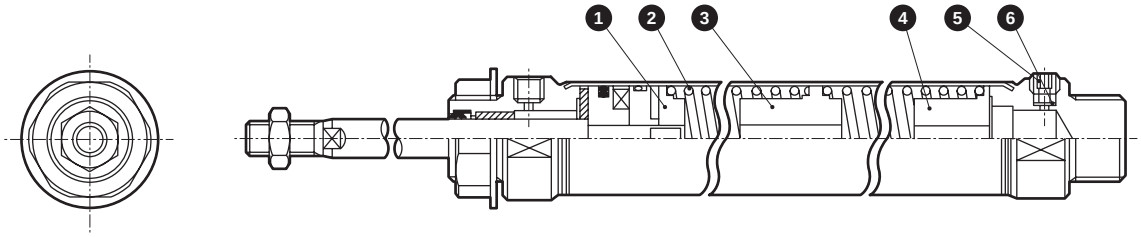

Cannot be disassembled

● Note: This product is caulked and cannot be disassembled.

No.	Part name	Material	Remarks	No.	Part name	Material	Remarks
1	Spring holder	Special aluminum		5	Plug	Steel	Zinc chromate
2	Spring	Piano wire	Paint	6	Stainless steel wire mesh	Stainless steel	
3	Spring holder	Special aluminum					
4	Spring holder	Special aluminum					

Spring load

(Unit: N)

Bore size (mm)	Stroke (mm)	25	50	75	100	150	200	250	300
ø20	At stroke of 0 mm	11.9	11.8	11.8	11.8	11.8	11.8	11.8	11.8
	At full stroke operation	31	38	31.5	38	38	38	38	38
ø25	At stroke of 0 mm	12.1	12.5	12.5	12.5	12.5	12.5	12.5	12.5
	At full stroke operation	30.4	40.2	33.1	40.2	40.2	40.2	40.2	40.2
ø32	At stroke of 0 mm	24.5	24.3	24.5	24.3	24.3	24.3	24.3	24.3
	At full stroke operation	52.9	54.9	54.9	54.9	54.9	54.9	54.9	54.9
ø40	At stroke of 0 mm	28.4	28.4	28.4	28.4	28.4	28.4	28.4	28.4
	At full stroke operation	78.4	100	82.3	100	100	100	100	100

Dimensions

● Basic (00)

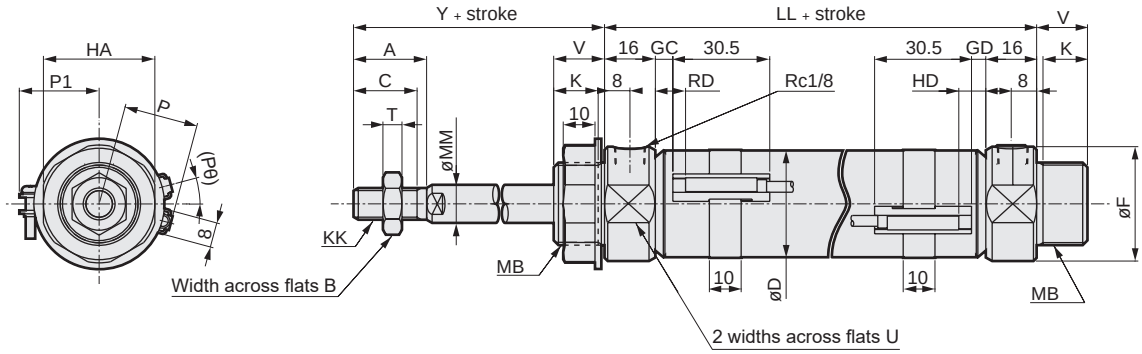

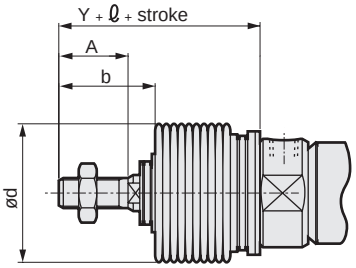

[With bellows]

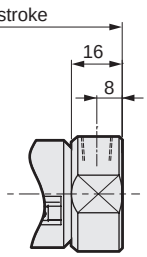

[Boss cutoff]

RD: Rod side max. sensitivity position
HD: Head side max. sensitivity position

1 : Refer to page 198 for HD, RD, and protruding dimensions of T1, T8* and 2-color LED switches.
*2 : For the ℓ dimension, round up below the decimal point.

Code / Bore size (mm)	Basic (00) Basic dimensions																	
	A	B	C	D	F	HA	K	KK	LL 25 or less	LL Over 25 to 50	LL Over 50 to 100	LL Over 100 to 150	LL Over 150 to 200	LL Over 200 to 250	LL Over 250 to 300	MB	MM	T
ø20	20	13	18	21.4	28	26	12	M 8x1.0	91	93	120	147	174	201	228	M18x1.5	10	5
ø25	23	17	20	26.4	32	35	14	M10x1.25	94	99	129	159	189	219	249	M26x1.5	12	6
ø32	23	17	20	33.6	36	35	14	M10x1.25	94	99	129	159	189	219	249	M26x1.5	12	6
ø40	25	19	22	41.6	45	35	14	M12x1.5	98	103	133	163	193	223	253	M26x1.5	14	7

Code / Bore size (mm)				With switch													
	U	V	Y	T0, T5, T2, T3 GC	T0, T5, T2, T3 GD	T0, T5, T2, T3 RD	T2W, T3W GC	T2W, T3W GD	T2W, T3W RD	HD T0, T5, T2, T3 25 or less	HD T0, T5, T2, T3 Over 25 to 50	HD T0, T5, T2, T3 Over 50 to 75	HD T0, T5, T2, T3 Over 75 to 100	HD T0, T5, T2, T3 Over 100 to 150	HD T0, T5, T2, T3 Over 150 to 200	HD T0, T5, T2, T3 Over 200 to 250	HD T0, T5, T2, T3 Over 250 to 300
ø20	24	14	44	4	3	8	6	5	10	32	34	61	61	88	115	142	169
ø25	30	16	46	5.5	4.5	9.5	7.5	6.5	11.5	33.5	38.5	68.5	68.5	98.5	128.5	158.5	188.5
ø32	34	16	46	5.5	4.5	9.5	7.5	6.5	11.5	33.5	38.5	68.5	68.5	98.5	128.5	158.5	188.5
ø40	43	16	48	7.5	6.5	11.5	9.5	8.5	13.5	35.5	40.5	70.5	70.5	100.5	130.5	160.5	190.5

Code / Bore size (mm)	With switch											With bellows		
	HD T2W, T3W 25 or less	HD T2W, T3W Over 25 to 50	HD T2W, T3W Over 50 to 75	HD T2W, T3W Over 75 to 100	HD T2W, T3W Over 100 to 150	HD T2W, T3W Over 150 to 200	HD T2W, T3W Over 200 to 250	HD T2W, T3W Over 250 to 300	P	P1	(Pθ)°	b	d	ℓ
ø20	34	36	63	63	90	117	144	171	17.3	19.5	22	30	30	(Stroke/3) + 6
ø25	35.5	40.5	70.5	70.5	100.5	130.5	160.5	190.5	19.8	22.0	18	32	46	(Stroke/3.25) + 7
ø32	35.5	40.5	70.5	70.5	100.5	130.5	160.5	190.5	24.3	25.5	15	32	46	(Stroke/3.25) + 7
ø40	37.5	42.5	72.5	72.5	102.5	132.5	162.5	192.5	28.3	29.5	12	34	46	(Stroke/3.25) + 7

* Dimensions of other mountings are the same as those of the standard. Refer to pages 92 to 97.
* For the dimensions of the accessories, refer to page 98.

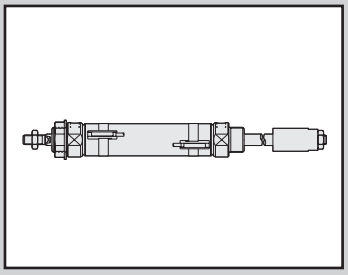

Medium bore size cylinder
double acting/stroke adjustable (push)

CMK2-P Series

● Bore size: ø20/ø25/ø32/ø40

JIS symbol ● Double acting/stroke adjustable

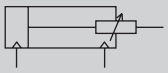

RoHS CAD

Specifications

Item		CMK2-P			
Bore size	mm	ø20	ø25	ø32	ø40
Actuation		Double acting/stroke adjustable (push)			
Working fluid		Compressed air			
Max. working pressure	MPa	1.0 (≈150 psi, 10 bar)			
Min. working pressure	MPa	0.15 (≈22 psi, 1.5 bar)			
Proof pressure	MPa	1.6 (≈230 psi, 16 bar)			
Ambient temperature	°C	-10 (14°F) to 60 (140°F) (no freezing)			
Port size		Rc1/8			
Stroke tolerance	mm	$^{+2.0}_{0}$ (Up to 200), $^{+2.4}_{0}$ (More than 200)			
Working piston speed	mm/s	50 to 500			
Cushion		Rubber cushion			
Lubrication		Not required (use turbine oil ISO VG32 if necessary for lubrication)			
Adjustable stroke range	mm	Max. 50			
Allowable absorbed energy	J	0.166	0.308	0.424	0.639

Stroke

Bore size (mm)	Standard stroke (mm)	Max. stroke (mm)		Min. stroke (mm)	
		Without bellows	With bellows	Without bellows	With bellows
ø20	25/50/75/100/150/200/250/300	430	350	25	25
ø25					
ø32					
ø40		400			

*1: The custom stroke is available in 1 mm increments.
*2: One side foot (LS) has the max. stroke of 50 mm.
*3: Contact CKD when stroke is shorter than 25 mm.

Min. stroke with switch

(Unit: mm)

Switch quantity	1					2					3				
	Proximity			Reed		Proximity			Reed		Proximity			Reed	
Bore size (mm)	T2, T3	T2W, T3W	T1, T*Y*	T0, T5	T8	T2, T3	T2W, T3W	T1, T*Y*	T0, T5	T8	T2, T3	T2W, T3W	T1, T*Y*	T0, T5	T8
ø20	25					25	30	35	25	35	50	55	55	50	55
ø25	25					25	30	35	25	35	50	55	55	50	55
ø32	25					25	30	35	25	35	50	55	55	50	55
ø40	25					25	30	35	25	35	50	55	55	50	55

*1: Up to 3 switches can be mounted.

Switch specifications

● 1-color/2-color LED

Item	2-wire proximity	2-wire proximity			3-wire proximity				2-wire reed						
	T1H/T1V	T2H/T2V/ T2JH/T2JV	T2YH/ T2YV	T2WH/ T2WV	T3H/ T3V	T3PH/ T3PV	T3YH/ T3YV	T3WH/ T3WV	T0H/T0V		T5H/T5V		T8H/T8V		
Applications	For programming controller, relay, compact solenoid valve	Dedicated for programmable controller			For programmable controller, relay				For programmable controller, relay		For programmable controller, relay, IC circuit (without indicator lamp), serial connection		For programmable controller, relay		
Output method	-				NPN output	PNP output	NPN output	NPN output	-						
Pwr. supp. V.	-				10 to 28 VDC				-						
Load voltage	85 to 265 VAC	10 to 30 VDC		24 VDC ±10%	30 VDC or less				12/24 VDC	100/110 VAC	5/12/24 VDC	100/110 VAC	12/24 VDC	110 VAC	220 VAC
Load current	5 to 100 mA	5 to 20 mA (*3)			100 mA or less		50 mA or less		5 to 50 mA	7 to 20 mA	50 mA or less	20 mA or less	5 to 50 mA	7 to 20 mA	7 to 10 mA
Indicator	LED (Lit when ON)	LED (Lit when ON)	Red/green LED (Lit when ON)	Red/green LED (Lit when ON)	LED (Lit when ON)	Yellow LED (Lit when ON)	Red/green LED (Lit when ON)	Red/green LED (Lit when ON)	LED (Lit when ON)		No indicator lamp		LED (Lit when ON)		
Leakage current	≤ 1 mA at 100 VAC, ≤ 2 mA at 200 VAC	1mA or less			10 μA or less				0 mA						
Weight g	1 m:33 3 m:87 5 m:142	1 m:18 3 m:49 5 m:80	1 m:33 3 m:87 5 m:142	1 m:18 3 m:49 5 m:80	1 m:18 3 m:49 5 m:80		1 m:33 3 m:87 5 m:142	1 m:18 3 m:49 5 m:80	1 m:18 3 m:49 5 m:80				1 m:33 3 m:87 5 m:142		

*1: Refer to Ending Page 1 for detailed switch specifications and dimensions.
*2: Switches other than the above models, such as switches with connectors, are also available. Refer to Ending Page 1.
*3: The max. load current is 20 mA at 25°C. The current is lower than 20 mA if the operating ambient temperature around the switch is higher than 25˚C. (5 to 10 mA at 60°C)

Cylinder weight

(Unit: kg)

Item/mounting / Bore size (mm)	Adjustable stroke	Product weight when stroke (S) = 0 mm					Switch weight (per 1 pc.)	Switch rail + band weight	Additional weight per S = 10 mm
		Basic (00)	Axial foot (LB)	Axial foot (LS)	Flange (FA/FB)	Trunnion (TA/TB)			
ø20	25	0.23	0.38	0.31	0.29	0.28	Refer to the weight in the switch specifications.	0.005	0.01
	50	0.26	0.41	0.34	0.32	0.31			
ø25	25	0.41	0.67	0.54	0.56	0.51		0.005	0.01
	50	0.49	0.75	0.62	0.64	0.59			
ø32	25	0.45	0.71	0.58	0.60	0.55		0.009	0.02
	50	0.52	0.78	0.65	0.67	0.62			
ø40	25	0.63	0.89	0.76	0.78	0.79		0.009	0.02
	50	0.71	0.97	0.84	0.86	0.87			

(Example) Product weight of CMK2-P-FA-32-50-25T0H-D

Product weight when S = 0 mm ... 0.60 kg
Additional weight when S = 50mm ..... Additional weight when S = 10 mm $0.02 \times \frac{\text{Product stroke (50)}}{10} = 0.10$ kg
Weight of 2 switches ..... 0.036 kg
Weight of switch rail + 2 bands .... 0.018 kg
Product weight ..... 0.60 kg+0.1 kg+0.036 kg+0.018 kg=0.754 kg

Theoretical thrust table

(Unit: N)

Bore size (mm)	Operating direction	Working pressure MPa									
		0.15	0.2	0.3	0.4	0.5	0.6	0.7	0.8	0.9	1.0
ø20	Push/Pull	35.3	47.1	70.7	94.2	1.18×10^2	1.41×10^2	1.65×10^2	1.88×10^2	2.12×10^2	2.36×10^2
ø25	Push/Pull	56.7	75.6	1.13×10^2	1.51×10^2	1.89×10^2	2.27×10^2	2.64×10^2	3.02×10^2	3.40×10^2	3.78×10^2
ø32	Push/Pull	1.04×10^2	1.38×10^2	2.07×10^2	2.76×10^2	3.46×10^2	4.15×10^2	4.84×10^2	5.53×10^2	6.22×10^2	6.91×10^2
ø40	Push/Pull	1.65×10^2	2.21×10^2	3.31×10^2	4.41×10^2	5.51×10^2	6.62×10^2	7.72×10^2	8.82×10^2	9.92×10^2	1.10×10^3

SCP*3
CMK2
CMA2
SCM
SCG
SCA2
SCS2
CKV2
CAV2/ COVP/N2
SSD2
SSG
SSD
CAT
MDC2
MVC
SMG
MSD/ MSDG
FC*
STK
SRL3
SRG3
SRM3
SRT3
MRL2
MRG2
SM-25
ShkAbs
FJ
FK
Spd Contr
Ending

How to order

No switch (built-in magnet for switch)

CMK2-P - 00 - 20 ( ) - 100 - 25 ——— F I

With switch (built-in magnet for switch)

CMK2-P - 00 - 20 ( ) - 100 - 25 - T0H - D - F I

Ⓐ Mounting *1
Ⓑ Bore size
Ⓒ Port thread
Ⓓ Stroke
Ⓔ Adjustable stroke range
Ⓕ Switch model No.
Ⓖ Switch quantity *8
Ⓗ Option *3, *4
Ⓘ Accessory *5

Code	Description
Ⓐ Mounting	
00	Basic
LB	Axial foot (Both sides)
LS	Axial foot (One side)
FA	Rod side flange
FB	Head side flange
TA	Rod side trunnion
TB	Head side trunnion

Ⓑ Bore size (mm)

20	ø20	*9
25	ø25	*9
32	ø32	
40	ø40	

Ⓒ Port thread

Blank	Rc thread
NN	NPT thread (made-to-order product)
GN	G thread (made-to-order product)

Ⓓ Stroke (mm)

Bore size	Stroke *2	Custom stroke
ø20	25 to 450	In 1 mm increments
ø25	25 to 450	
ø32	25 to 430	
ø40	25 to 400	

Ⓔ Adjustable stroke range (mm)

25	25
50	50

Ⓕ Switch model No.

Axial lead wire	Radial lead wire	Contact	Voltage AC	Voltage DC	Indicator	Lead wire
T0H*	T0V*	Reed	●	●	1-color LED	2-wire
T5H*	T5V*	Reed	●	●	No indicator lamp	2-wire
T8H*	T8V*	Reed	●	●	1-color LED	2-wire
T1H*	T1V*	Prox.	●		1-color LED	2-wire
T2H*	T2V*	Prox.		●	1-color LED	2-wire
T3H*	T3V*	Prox.		●	1-color LED	3-wire
T3PH*	T3PV*	Prox.		●	1-color LED	3-wire
T2WH*	T2WV*	Prox.		●	2-color LED	2-wire
T2YH*	T2YV*	Prox.		●	2-color LED	2-wire
T3WH*	T3WV*	Prox.		●	2-color LED	3-wire
T3YH*	T3YV*	Prox.		●	2-color LED	3-wire
T2JH*	T2JV*	Prox.		●	1-color LED off-delay	2-wire

*** Lead wire length**

Blank	1 m (standard)
3	3 m (option)
5	5 m (option)

Ⓖ Switch quantity

R	1 on rod side
H	1 on head side
D	2
T	3

Ⓗ Option

		Max. ambient temp.	Instantaneous max. temp.
J	Bellows	100°C	200°C
L	Bellows	250°C	400°C
F	With push-in fitting (straight)		
FE	With push-in fitting (elbow)		
M	Piston rod material (stainless steel) *9		
P6	Copper and PTFE free		

Ⓘ Accessory

I	Rod eye
Y	Rod clevis (pin and split washer pin included)
B2	Clevis bracket (pin and snap ring included)

⚠ Precautions for model No. selection

*1 : One side foot (LS) has the max. stroke of 50 mm.
*2 : For the min. stroke with switch and the max. and min. strokes with bellows, refer to page 112.
*3 : The compatible tube O.D. of F (with push-in fitting (straight)) and FE (with push-in fitting (elbow)) is ø6.
*4 : The instantaneous max. temperature is the temperature when sparks and cutting chips, etc., instantaneously contact the bellows.
*5 : "I" and "Y" cannot be selected together.
*6 : Refer to Ending Page 85 for custom specifications of rod end form.
*7 : Refer to page 84 for combination of variations/options.
*8 : Up to three switches can be installed. If four or more switches are required, switch mounting brackets for the extra switches must be prepared separately.
*9 : For 20 or 25 bore size, the rod is stainless steel as standard and the rod nut is zinc chromate. If a stainless steel rod nut is necessary, select the "M" option code.

[Example of model No.]

CMK2-P-LB-20-100-25-T0H-D-FI

Model: Medium bore size cylinder, double acting/stroke adjustable (push)

Ⓐ Mounting	: Axial foot (Both sides)
Ⓑ Bore size	: ø20 mm
Ⓒ Port thread	: Rc thread
Ⓓ Stroke	:100 mm
Ⓔ Adjustable stroke	: 25 mm
Ⓕ Switch model No.	: Reed T0H switch, lead wire 1m
Ⓖ Switch quantity	: 2
Ⓗ Option	: With push-in fitting (straight)
Ⓘ Accessory	: Rod eye

How to order switch

● Switch body + mounting bracket set

CMK2 - T0H - 20

Switch model No. (Item Ⓕ on page 114)

Bore size (Item Ⓑ on page 114)

● Switch body only

SW - T0H

Switch model No. (Item Ⓕ on page 114)

● Mounting bracket set

CMK2 - T - 20

Mounting bracket

Bore size (Item Ⓑ on page 114)

How to order mounting bracket

Bore size (mm) / Mounting bracket	ø20	ø25	ø32	ø40
Basic (00) *3	M1-00-20	M1-00-30	M1-00-30	M1-00-30
Axial foot (LB/LS)	M1-LB-20	M1-LB-30	M1-LB-30	M1-LB-30
Flange (FA/FB)	M1-FA-20	M1-FA-30	M1-FA-30	M1-FA-30
Trunnion (TA/TB)	M1-TA-20	M1-TA-30	M1-TA-30	M1-TA-40

*1: Regarding mounting brackets, mounting nuts and toothed washers are supplied with the axial foot and flange. The trunnion includes mounting nuts.
2: For axial foot (two-sided), 2 sets of “M1-LB-” in the table above are required.
*3: Mounting nut, toothed washer only. Although 1 set is included with the basic of the product (00), use this when needed.

Internal structure and parts list

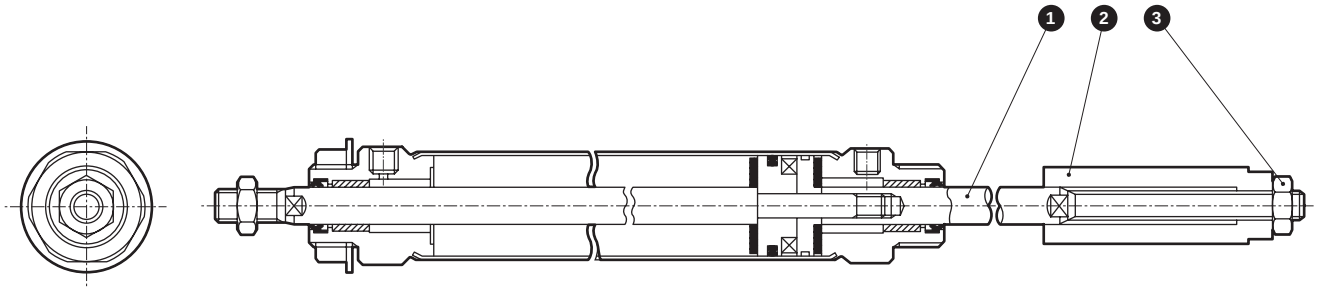

Cannot be disassembled

● Note: This product is caulked and cannot be disassembled.

No.	Part name	Material	Remarks
1	Piston rod B	ø20, ø25: Stainless steel ø32, ø40: Carbon steel	Industrial chrome plating
2	Adjustable stopper	Steel	Zinc chromate
3	Lock nut	Steel	Zinc chromate

Dimensions

● Basic (00)

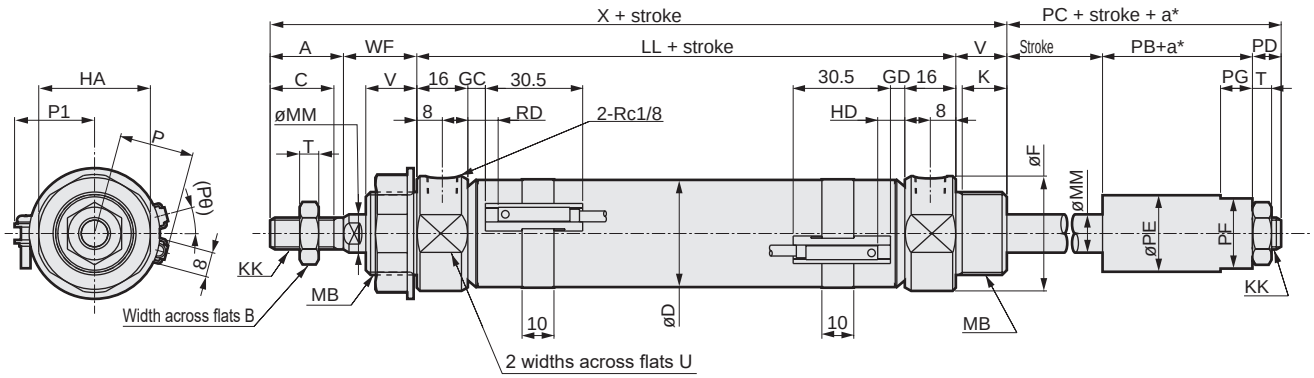

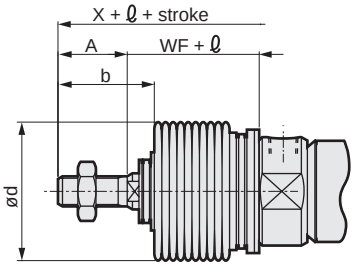

[With bellows]

RD: Rod side max. sensitivity position
HD: Head side max. sensitivity position

1 : Refer to page 198 for HD, RD, and protruding dimensions of T1, T8* and 2-color LED switches.
*2 : For the ℓ dimension, round up below the decimal point.

* a: Adjustable stroke.

Code	Basic (00) Basic dimensions															
Bore size (mm)	A	B	C	D	F	HA	K	KK	LL	MB	MM	T	U	V	WF	X
ø20	20	13	18	21.4	28	26	12	M 8x1.0	66	M18x1.5	10	5	24	14	24	124
ø25	23	17	20	26.4	32	35	14	M10x1.25	69	M26x1.5	12	6	30	16	23	131
ø32	23	17	20	33.6	36	35	14	M10x1.25	69	M26x1.5	12	6	34	16	23	131
ø40	25	19	22	41.6	45	35	14	M12x1.5	73	M26x1.5	14	7	43	16	23	137

Code							With switch										
							T0, T5, T2, T3				T2W, T3W						
Bore size (mm)	PB	PC	PD	PE	PF	PG	GC	GD	RD	HD	GC	GD	RD	HD	P	P1	(Pθ)°
ø20	21	29	8	16	14	7	4	3	8	7	6	5	10	9	17.3	19.5	22
ø25	22	31	9	24	22	10	5.5	4.5	9.5	8.5	7.5	6.5	11.5	10.5	19.8	22.0	18
ø32	22	31	9	24	22	10	5.5	4.5	9.5	8.5	7.5	6.5	11.5	10.5	24.3	25.5	15
ø40	22	32	10	24	22	10	7.5	6.5	11.5	10.5	9.5	8.5	13.5	12.5	28.3	29.5	12

Code	With bellows		
Bore size (mm)	b	d	ℓ
ø20	30	30	(Stroke/3) + 6
ø25	32	46	(Stroke/3.25) + 7
ø32	32	46	(Stroke/3.25) + 7
ø40	34	46	(Stroke/3.25) + 7

* Dimensions of other mountings are the same as those of the standard. Refer to pages 92 to 97.
* For the dimensions of the accessories, refer to page 98.

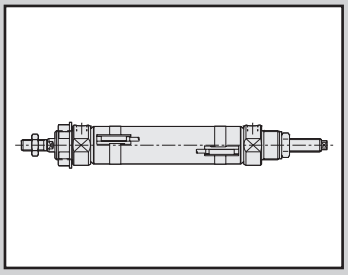

Medium bore size cylinder
Double acting/stroke adjustable (pull)

CMK2-R Series

● Bore size: ø20/ø25/ø32/ø40

JIS symbol ● Double acting/stroke adjustable

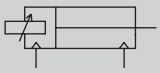

RoHS CAD

Specifications

Item		CMK2-R			
Bore size	mm	ø20	ø25	ø32	ø40
Actuation		Double acting/stroke adjustable (pull)			
Working fluid		Compressed air			
Max. working pressure	MPa	1.0 (≈150 psi, 10 bar)			
Min. working pressure	MPa	0.1 (≈15 psi, 1 bar)			
Proof pressure	MPa	1.6 (≈230 psi, 16 bar)			
Ambient temperature	°C	-10 (14°F) to 60 (140°F) (no freezing)			
Port size		Rc1/8			
Stroke tolerance	mm	$^{+2.0}_{0}$(Up to 200), $^{+2.4}_{0}$(More than 200)			
Working piston speed	mm/s	50 to 500			
Cushion		Rubber cushion			
Lubrication		Not required (use turbine oil class 1 ISO VG32 if necessary for lubrication)			
Adjustable stroke range	mm	Max. 50			
Allowable absorbed energy	J	0.166	0.308	0.424	0.639

Stroke

Bore size (mm)	Standard stroke (mm)	Max. stroke (mm)		Min. stroke (mm)	
		Without bellows	With bellows	Without bellows	With bellows
ø20	25/50/75/100/150/200/250/300	750	650	25	25
ø25					
ø32					
ø40					

*1: The custom stroke is available in 1 mm increments.
*2: One side foot (LS) has the max. stroke of 50 mm.
*3: Contact CKD when stroke is shorter than 25 mm.

Min. stroke with switch

(Unit: mm)

Switch quantity / Bore size (mm)	1					2					3				
	Proximity			Reed		Proximity			Reed		Proximity			Reed	
	T2, T3	T2W, T3W	T1, T*Y*	T0, T5	T8	T2, T3	T2W, T3W	T1, T*Y*	T0, T5	T8	T2, T3	T2W, T3W	T1, T*Y*	T0, T5	T8
ø20	25					25	30	35	25	35	50	55	55	50	55
ø25	25					25	30	35	25	35	50	55	55	50	55
ø32	25					25	30	35	25	35	50	55	55	50	55
ø40	25					25	30	35	25	35	50	55	55	50	55

*1: Up to 3 switches can be mounted.

Switch specifications

● 1-color/2-color LED

Item	2-wire proximity	2-wire proximity			3-wire proximity				2-wire reed						
	T1H/T1V	T2H/T2V/ T2JH/T2JV	T2YH/ T2YV	T2WH/ T2WV	T3H/ T3V	T3PH/ T3PV	T3YH/ T3YV	T3WH/ T3WV	T0H/T0V		T5H/T5V		T8H/T8V		
Applications	For programming controller, relay, compact solenoid valve	Dedicated for programmable controller			For programmable controller, relay				For programmable controller, relay		For programmable controller, relay IC circuit (no indicator), serial connection		For programmable controller, relay		
Output method	-				NPN output	PNP output	NPN output	NPN output	-						
Pwr. supp. V.	-				10 to 28 VDC				-						
Load voltage	85 to 265 VAC	10 to 30 VDC		24 VDC ±10%	30 VDC or less				12/24 VDC	100/110 VAC	5/12/24 VDC	100/110 VAC	12/24 VDC	110 VAC	220 VAC
Load current	5 to 100 mA	5 to 20 mA (*3)			100 mA or less		50 mA or less		5 to 50 mA	7 to 20 mA	50 mA or less	20 mA or less	5 to 50 mA	7 to 20 mA	7 to 10 mA
Indicator	LED (Lit when ON)	LED (Lit when ON)	Red/green LED (Lit when ON)	Red/green LED (Lit when ON)	LED (Lit when ON)	Yellow LED (Lit when ON)	Red/green LED (Lit when ON)	Red/green LED (Lit when ON)	LED (Lit when ON)		No indicator lamp		LED (Lit when ON)		
Leakage current	≤ 1 mA at 100 VAC, ≤ 2 mA at 200 VAC	1 mA or less			10 μA or less				0 mA						
Weight g	1 m:33 3 m:87 5 m:142	1 m:18 3 m:49 5 m:80	1 m:33 3 m:87 5 m:142	1 m:18 3 m:49 5 m:80	1 m:18 3 m:49 5 m:80		1 m:33 3 m:87 5 m:142	1 m:18 3 m:49 5 m:80	1 m:18 3 m:49 5 m:80				1 m:33 3 m:87 5 m:142		

*1: Refer to Ending Page 1 for detailed switch specifications and dimensions.
*2: Switches other than the above models, such as switches with connectors, are also available. Refer to Ending Page 1.
*3 : The max. load current is 20 mA at 25°C. The current is lower than 20 mA if the operating ambient temperature around the switch is higher than 25˚C. (5 to 10 mA at 60°C)

Cylinder weight

(Unit: kg)

Item/mounting / Bore size (mm)	Adjustable stroke	Product weight when stroke (S) = 0 mm					Switch weight (per 1 pc.)	Switch rail + band weight	Additional weight per S = 10 mm
		Basic (00)	Axial foot (LB)	Axial foot (LS)	Flange (FA/FB)	Trunnion (TA/TB)			
ø20	25	0.20	0.35	0.28	0.26	0.25	Refer to the weight in the switch specifications.	0.005	0.01
	50	0.20	0.35	0.28	0.26	0.25			
ø25	25	0.35	0.61	0.48	0.50	0.45		0.005	0.01
	50	0.37	0.63	0.50	0.52	0.47			
ø32	25	0.39	0.65	0.52	0.54	0.49		0.009	0.02
	50	0.41	0.67	0.54	0.56	0.51			
ø40	25	0.58	0.84	0.71	0.73	0.74		0.009	0.02
	50	0.60	0.86	0.73	0.75	0.76			

(Example) Product weight of CMK2-R-FA-32-50-25T0H-D

Product weight when S = 0 mm .....0.54 kg
Additional weight when S = 50mm ....Additional weight when S = 10 mm $0.02 \times \frac{\text{Product stroke (50)}}{10} = 0.10$ kg
Weight of 2 switches .....0.036 kg
Weight of switch rail + 2 bands .....0.018 kg
Product weight .....0.54 kg+0.1 kg+0.036 kg+0.018 kg=0.694 kg

Theoretical thrust table

(Unit: N)

Bore size (mm)	Operating direction	Working pressure MPa										
		0.1	0.15	0.2	0.3	0.4	0.5	0.6	0.7	0.8	0.9	1.0
ø20	Push	31.4	47.1	62.8	94.2	1.26×10^2	1.57×10^2	1.88×10^2	2.20×10^2	2.51×10^2	2.83×10^2	3.14×10^2
	Pull	23.6	35.3	47.1	70.7	94.2	1.18×10^2	1.41×10^2	1.65×10^2	1.88×10^2	2.12×10^2	2.36×10^2
ø25	Push	49.1	73.6	98.2	1.47×10^2	1.96×10^2	2.45×10^2	2.95×10^2	3.44×10^2	3.93×10^2	4.42×10^2	4.91×10^2
	Pull	37.8	56.7	75.6	1.13×10^2	1.51×10^2	1.89×10^2	2.27×10^2	2.64×10^2	3.02×10^2	3.40×10^2	3.78×10^2
ø32	Push	80.4	1.21×10^2	1.61×10^2	2.41×10^2	3.22×10^2	4.02×10^2	4.83×10^2	5.63×10^2	6.43×10^2	7.24×10^2	8.04×10^2
	Pull	69.1	1.04×10^2	1.38×10^2	2.07×10^2	2.76×10^2	3.46×10^2	4.15×10^2	4.84×10^2	5.53×10^2	6.22×10^2	6.91×10^2
ø40	Push	1.26×10^2	1.88×10^2	2.51×10^2	3.77×10^2	5.03×10^2	6.28×10^2	7.54×10^2	8.80×10^2	1.01×10^3	1.13×10^3	1.26×10^3
	Pull	1.10×10^2	1.65×10^2	2.21×10^2	3.31×10^2	4.41×10^2	5.51×10^2	6.62×10^2	7.72×10^2	8.82×10^2	9.92×10^2	1.10×10^3

SCP*3
CMK2
CMA2
SCM
SCG
SCA2
SCS2
CKV2
CAV2/ COVP/N2
SSD2
SSG
SSD
CAT
MDC2
MVC
SMG
MSD/ MSDG
FC*
STK
SRL3
SRG3
SRM3
SRT3
MRL2
MRG2
SM-25
ShkAbs
FJ
FK
Spd Contr
Ending

How to order

No switch (built-in magnet for switch)

CMK2-R - 00 - 20 ( ) - 100 - 25 ——— L I

With switch (built-in magnet for switch)

CMK2-R - 00 - 20 ( ) - 100 - 25 - T0H - D - L I

Ⓐ Mounting *1

Ⓑ Bore size

Ⓒ Port thread

Ⓓ Stroke

Ⓔ Adjustable stroke range

Ⓕ Switch model No.

Ⓖ Switch quantity *9

Ⓗ Option *3, *4, *5

Ⓘ Accessory *6

Code	Description
Ⓐ Mounting	
00	Basic
LB	Axial foot (Both sides)
LS	Axial foot (One side)
FA	Rod side flange
FB	Head side flange
TA	Rod side trunnion
TB	Head side trunnion

Ⓑ Bore size (mm)

20	ø20	*10
25	ø25	*10
32	ø32	
40	ø40	

Ⓒ Port thread

Blank	Rc thread
NN	NPT thread (made-to-order product)
GN	G thread (made-to-order product)

Ⓓ Stroke (mm)

Bore size	Stroke *2	Custom stroke
ø20	**25 to 750**	**In 1 mm increments**
ø25	**25 to 750**	
ø32	**25 to 750**	
ø40	**25 to 750**	

Ⓔ Adjustable stroke range (mm)

25	25
50	50

Ⓕ Switch model No.

Axial lead wire		Contact	Voltage AC	Voltage DC	Indicator	Lead wire
T0H*	**T0V***	Reed	●	●	1-color LED	2-wire
T5H*	**T5V***	Reed	●	●	No indicator lamp	2-wire
T8H*	**T8V***	Reed	●	●	1-color LED	2-wire
T1H*	**T1V***	Proximity	●		1-color LED	2-wire
T2H*	**T2V***	Proximity		●	1-color LED	3-wire
T3H*	**T3V***	Proximity		●	1-color LED	2-wire
T3PH*	**T3PV***	Proximity		●	1-color LED	3-wire
T2WH*	**T2WV***	Proximity		●	2-color LED	2-wire
T2YH*	**T2YV***	Proximity		●	2-color LED	2-wire
T3WH*	**T3WV***	Proximity		●	2-color LED	3-wire
T3YH*	**T3YV***	Proximity		●	2-color LED	3-wire
T2JH*	**T2JV***	Proximity		●	1-color LED off-delay	2-wire

*** Lead wire length**

Blank	1 m (standard)
3	3 m (option)
5	5 m (option)

Ⓖ Switch quantity

R	1 on rod side
H	1 on head side
D	2
T	3

Ⓗ Option

		Max. ambient temp.	Instantaneous max. temp.
J	Bellows	100°C	200°C
L	Bellows	250°C	400°C
F	With push-in fitting (straight)		
FE	With push-in fitting (elbow)		
M	Piston rod material (stainless steel) *10		
P6	Copper and PTFE free		

Ⓘ Accessory

I	Rod eye
Y	Rod clevis (pin and split washer pin included)
B2	Clevis bracket (pin and snap ring included)

⚠ Precautions for model No. selection

*1 : One side foot (LS) has the max. stroke of 50 mm.
*2 : For the min. stroke with switch and the max. and min. strokes with bellows, refer to page 118.
*3 : The max. ambient temperature of bellows of ø25 to ø40 is 100°C (code: J).
*4 : The compatible tube O.D. of F (with push-in fitting (straight)) and FE (with push-in fitting (elbow)) is ø6.
*5 : The instantaneous max. temperature is the temperature when sparks and cutting chips, etc., instantaneously contact the bellows.
*6 : "I" and "Y" cannot be selected together.
*7 : Refer to Ending Page 85 for custom specifications of rod end form.
*8 : Refer to page 84 for combination of variations/options.
*9 : Up to three switches can be installed. If four or more switches are required, switch mounting brackets for the extra switches must be prepared separately.
*10 : For 20 or 25 bore size, the rod is stainless steel as standard and the rod nut is zinc chromate. If a stainless steel rod nut is necessary, select the "M" option code.

[Example of model No.]

CMK2-R-00-20-100-25-T0H-D-MI

Model: Medium bore size cylinder, double acting/stroke adjustable (pull)

Ⓐ Mounting	: Basic
Ⓑ Bore size	: ø20 mm
Ⓒ Port thread	: Rc thread
Ⓓ Stroke	: 100 mm
Ⓔ Adjustable stroke	: 25 mm
Ⓕ Switch model No.	: Reed T0H switch, lead wire 1 m
Ⓖ Switch quantity	: 2
Ⓗ Option	: Piston rod material (stainless steel)
Ⓘ Accessory	: Rod eye

How to order switch

● Switch body + mounting bracket set

CMK2 - T0H - 20

Bore size (Item Ⓑ on page 120)

Switch model No. (Item Ⓕ on page 120)

● Switch body only

SW - T0H

Switch model No. (Item Ⓕ on page 120)

● Mounting bracket set

CMK2 - T - 20

Bore size (Item Ⓑ on page 120)

Mounting bracket

How to order mounting bracket

Bore size (mm) / Mounting bracket	ø20	ø25	ø32	ø40
Basic (00) *3	M1-00-20	M1-00-30	M1-00-30	M1-00-30
Axial foot (LB/LS)	M1-LB-20	M1-LB-30	M1-LB-30	M1-LB-30
Flange (FA/FB)	M1-FA-20	M1-FA-30	M1-FA-30	M1-FA-30
Trunnion (TA/TB)	M1-TA-20	M1-TA-30	M1-TA-30	M1-TA-40

*1: Regarding mounting brackets, mounting nuts and toothed washers are supplied with the axial foot and flange. The trunnion includes mounting nuts.
2: For axial foot (two-sided), 2 sets of “M1-LB-” in the table above are required.
*3: Mounting nut, toothed washer only. Although 1 set is included with the basic of the product (00), use this when needed.

Internal structure and parts list

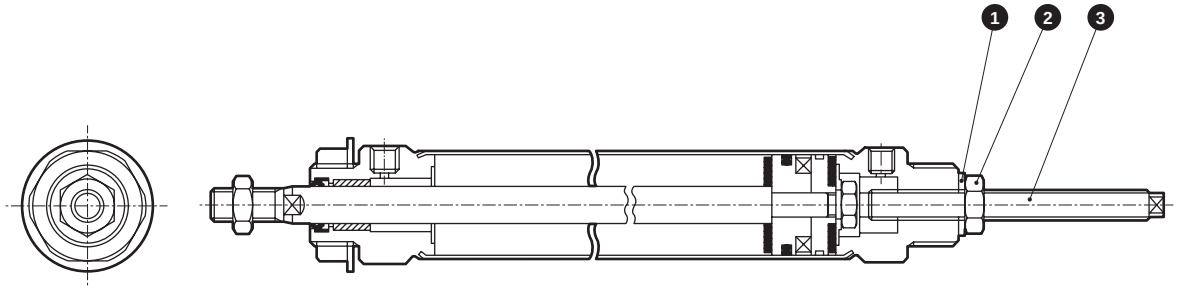

Cannot be disassembled

● Note: This product is caulked and cannot be disassembled.

No.	Part name	Material	Remarks
1	Seal washer	Nitrile rubber, steel	
2	Lock nut	Steel	Zinc chromate
3	Adjusting bolt	Steel	Zinc chromate

Dimensions

● Basic (00)

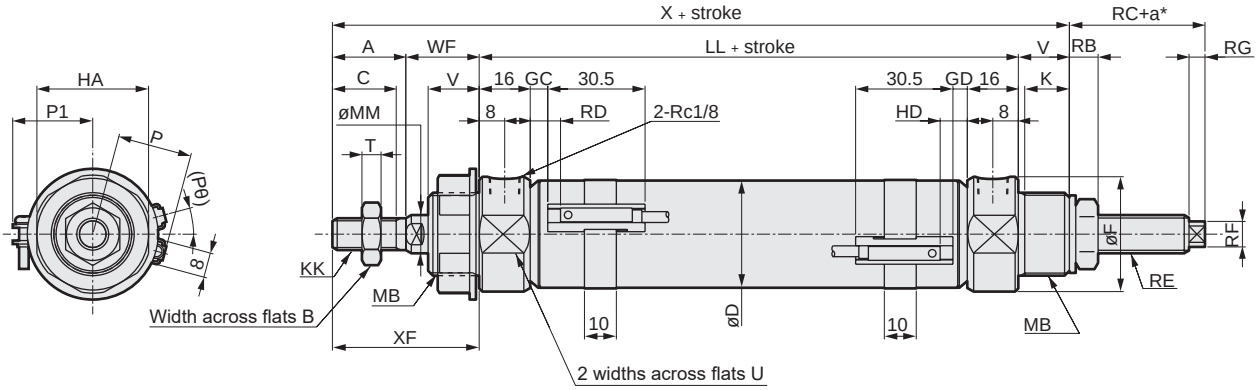

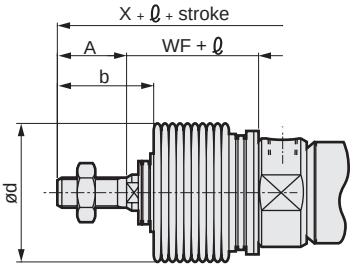

RD: Rod side max. sensitivity position
HD: Head side max. sensitivity position

*1: For the dimension, round up below the decimal point. * a: Adjustable stroke

Code / Bore size (mm)	Basic (00) Basic dimensions																
	A	B	C	D	F	HA	K	KK	LL	MB	MM	T	U	V	WF	X	XF
ø20	20	13	18	21.4	28	26	12	M8x1.0	66	M18x1.5	10	5	24	14	24	124	44
ø25	23	17	20	26.4	32	35	14	M10x1.25	69	M26x1.5	12	6	30	16	23	131	46
ø32	23	17	20	33.6	36	35	14	M10x1.25	69	M26x1.5	12	6	34	16	23	131	46
ø40	25	19	22	41.6	45	35	14	M12x1.5	73	M26x1.5	14	7	43	16	23	137	48

Code / Bore size (mm)						With switch											With bellows	
	RB	RC	RE	RF	RG	T0, T5, T2, T3				T2W, T3W				P	P1	(Pθ)°	b	d
						GC	GD	RD	HD	GC	GD	RD	HD					
ø20	6.3	11	M 8x1.0	□5.5	3	4	3	8	7	6	5	10	9	17.3	19.5	22	30	30
ø25	9	17.5	M12x1.5	□8	5	5.5	4.5	9.5	8.5	7.5	6.5	11.5	10.5	19.8	22.0	18	32	46
ø32	9	17.5	M12x1.5	□8	5	5.5	4.5	9.5	8.5	7.5	6.5	11.5	10.5	24.3	25.5	15	32	46
ø40	9	16	M12x1.5	□8	5	7.5	6.5	11.5	10.5	9.5	8.5	13.5	12.5	28.3	29.5	12	34	46

Code / Bore size (mm)	ℓ
ø20	(Stroke/3) + 6
ø25	(Stroke/3.25) + 7
ø32	(Stroke/3.25) + 7
ø40	(Stroke/3.25) + 7

* Dimensions of other mountings are the same as those of the standard. Refer to pages 92 to 97.
* For the dimensions of the accessories, refer to page 98.

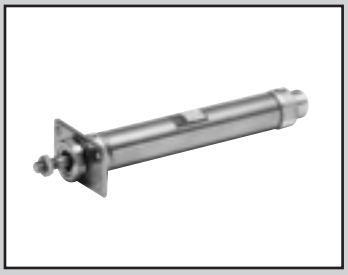

Medium bore size cylinder
Double acting/heat resistant

CMK2-T Series

● Bore size: ø20/ø25/ø32/ø40

JIS symbol ● Double acting cylinder single rod

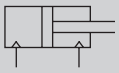

RoHS CAD

Specifications

Item		CMK2-T			
Bore size	mm	ø20	ø25	ø32	ø40
Actuation		Double acting/heat resistant			
Working fluid		Compressed air			
Max. working pressure	MPa	1.0 (≈150 psi, 10 bar)			
Min. working pressure	MPa	0.1 (≈15 psi, 1 bar)			
Proof pressure	MPa	1.6 (≈230 psi, 16 bar)			
Ambient temperature	°C	5 (41°F) to 120 (248°F)			
Port size		Rc1/8			
Stroke tolerance	mm	$^{+2.0}_{0}$(Up to 200), $^{+2.4}_{0}$(More than 200)			
Working piston speed	mm/s	50 to 500			
Cushion		Rubber cushion			
Lubrication		Not available			
Allowable absorbed energy	J	0.166	0.308	0.424	0.639

Stroke

Bore size (mm)	Standard stroke (mm)	Max. stroke (mm)		Min. stroke (mm)	
		Without bellows	With bellows	Without bellows Bellows "L"	Bellows "J"
ø20	25/50/75/100/150/200/250/300	750	650	5	Not supported
ø25					
ø32					
ø40					

*1: The custom stroke is available in 1 mm increments.
*2: One side foot side (LS) has the max. stroke of 50 mm.

Cylinder weight

(Unit: kg)

Item/mounting / Bore size (mm)	Product weight when stroke (S) = 0 mm								Additional weight per S = 10mm
	Basic (00)	Axial foot (LB)	Axial foot (LS)	Flange (FA/FB)	Eye bracket (CA)	Clevis (CC)	Clevis bracket (CB)	Trunnion (TA/TB)	
ø20	0.17	0.32	0.25	0.23	0.32	0.18	0.32	0.22	0.01
ø25	0.26	0.52	0.39	0.41	0.50	0.26	0.50	0.36	0.01
ø32	0.29	0.55	0.42	0.44	0.53	0.29	0.53	0.39	0.02
ø40	0.47	0.73	0.60	0.62	0.71	0.49	0.71	0.63	0.02

(Example) Product weight of CMK2-T-FA-32-50

Product weight when S = 0 mm .....0.44 kg
Additional weight when S = 50mm ....Additional weight when S = 10 mm $0.02 \times \frac{\text{Product stroke (50)}}{10}$ =0.10 kg
Product weight .....0.44 kg+0.1 kg=0.54 kg

Theoretical thrust table

(Unit: N)

Bore size (mm)	Operating direction	Working pressure MPa										
		0.1	0.15	0.2	0.3	0.4	0.5	0.6	0.7	0.8	0.9	1.0
ø20	Push	31.4	47.1	62.8	94.2	1.26×10^2	1.57×10^2	1.88×10^2	2.20×10^2	2.51×10^2	2.83×10^2	3.14×10^2
	Pull	23.6	35.3	47.1	70.7	94.2	1.18×10^2	1.41×10^2	1.65×10^2	1.88×10^2	2.12×10^2	2.36×10^2
ø25	Push	49.1	73.6	98.2	1.47×10^2	1.96×10^2	2.45×10^2	2.95×10^2	3.44×10^2	3.93×10^2	4.42×10^2	4.91×10^2
	Pull	37.8	56.7	75.6	1.13×10^2	1.51×10^2	1.89×10^2	2.27×10^2	2.64×10^2	3.02×10^2	3.40×10^2	3.78×10^2
ø32	Push	80.4	1.21×10^2	1.61×10^2	2.41×10^2	3.22×10^2	4.02×10^2	4.83×10^2	5.63×10^2	6.43×10^2	7.24×10^2	8.04×10^2
	Pull	69.1	1.04×10^2	1.38×10^2	2.07×10^2	2.76×10^2	3.46×10^2	4.15×10^2	4.84×10^2	5.53×10^2	6.22×10^2	6.91×10^2
ø40	Push	1.26×10^2	1.88×10^2	2.51×10^2	3.77×10^2	5.03×10^2	6.28×10^2	7.54×10^2	8.80×10^2	1.01×10^3	1.13×10^3	1.26×10^3
	Pull	1.10×10^2	1.65×10^2	2.21×10^2	3.31×10^2	4.41×10^2	5.51×10^2	6.62×10^2	7.72×10^2	8.82×10^2	9.92×10^2	1.10×10^3

How to order

CMK2-T - 00 - 20 ( ) - 100 - V I

- Ⓐ Mounting *1
- Ⓑ Bore size
- Ⓒ Port thread
- Ⓓ Stroke
- Ⓔ Option *2, *3
- Ⓕ Accessory *4

Code	Description
Ⓐ Mounting	
00	Basic
LB	Axial foot (Both sides)
LS	Axial foot (One side)
FA	Rod side flange
FB	Head side flange
CA	Eye bracket
CC	Eye bracket integrated
CC1	Eye bracket, bush pressfit
CB	Clevis bracket (pin and split washer pin included)
TA	Rod side trunnion
TB	Head side trunnion

Ⓑ Bore size (mm)		
20	ø20	*7
25	ø25	*7
32	ø32	
40	ø40	

Ⓒ Port thread	
Blank	Rc thread
NN	NPT thread (made-to-order product)
GN	G thread (made-to-order product)

Ⓓ Stroke (mm)		
Bore size	**Stroke**	**Custom stroke**
ø20	**5 to 750**	**In 1 mm increments**
ø25	**5 to 750**	
ø32	**5 to 750**	
ø40	**5 to 750**	

Ⓔ Option			
		Max. ambient temp.	Instantaneous max. temp.
L	Bellows	250°C	400°C
M	Piston rod material (stainless steel) *7		
V	Boss cutoff		

Ⓕ Accessory	
I	Rod eye
Y	Rod clevis (pin and split washer pin included)
B2	Clevis bracket (pin and snap ring included)

⚠ Precautions for model No. selection

*1 : One side foot (LS) has the max. stroke of 50 mm.
*2 : Refer to page 124 for the max. and min. strokes with bellows.
*3 : The instantaneous max. temperature is the temperature when sparks and cutting chips, etc., instantaneously contact the bellows.
*4 : "I" and "Y" cannot be selected together.
*5 : Refer to Ending Page 85 for custom specifications of rod end form.
*6 : Refer to page 84 for combination of variations/options.
*7 : For 20 or 25 bore size, the rod is stainless steel as standard and the rod nut is zinc chromate. If a stainless steel rod nut is necessary, select the "M" option code.

[Example of model No.]

CMK2-T-00-20-100-VI

Model: Medium bore size cylinder, double acting/heat resistance

Ⓐ Mounting : Basic
Ⓑ Bore size : ø20 mm
Ⓒ Port thread : Rc thread
Ⓓ Stroke : 100 mm
Ⓔ Option : Boss cutoff
Ⓕ Accessory : Rod eye

SCP*3
CMK2
CMA2
SCM
SCG
SCA2
SCS2
CKV2
CAV2/ COVP/N2
SSD2
SSG
SSD
CAT
MDC2
MVC
SMG
MSD/ MSDG
FC*
STK
SRL3
SRG3
SRM3
SRT3
MRL2
MRG2
SM-25
ShkAbs
FJ
FK
Spd Contr
Ending

Internal structure and parts list

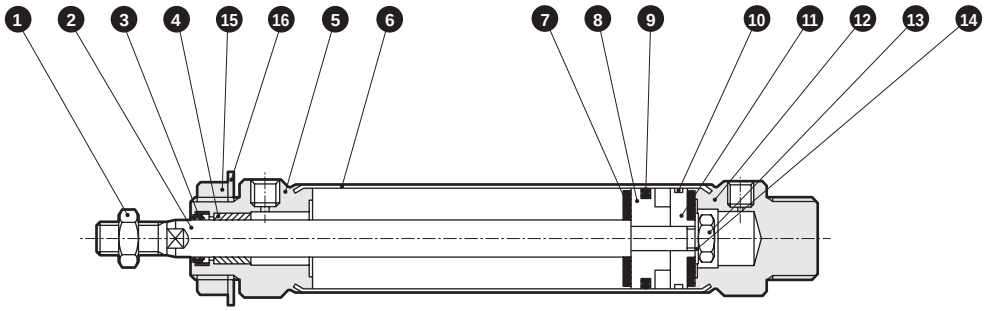

Cannot be disassembled

● Note: This product is caulked and cannot be disassembled.

No.	Part name	Material	Remarks	No.	Part name	Material	Remarks
1	Rod nut	Steel	Zinc chromate	8	Piston A	Aluminum alloy	
2	Piston rod	ø20, ø25: Stainless steel ø32, ø40: Carbon steel	Industrial chrome plating	9	Piston packing	Fluoro rubber	
				10	Wear ring	Special resin	
3	Rod packing	Fluoro rubber		11	Piston B	Aluminum alloy	
4	Bush	ø20: Dry bearing ø25, ø32, ø40: Copper-based		12	Head cover	Aluminum alloy	
				13	Hexagon nut	Steel	Zinc chromate
5	Rod cover	Aluminum alloy		14	Spacer	Steel	Zinc chromate
6	Cylinder tube	Stainless steel		15	Nut	Steel	Zinc chromate
7	Cushion rubber	Fluoro rubber		16	Toothed washer	Steel	Zinc chromate

Dimensions

Same as standard. Refer to pages 91 to 97.

MEMO

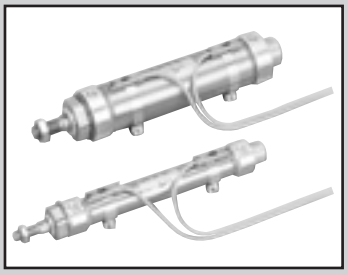

Medium bore size cylinder
Double acting/rubber-air cushioned

CMK2-*C Series

● Bore size: ø20/ø25/ø32/ø40
Port size: Rc 1/8

JIS symbol ● Double acting cylinder single rod

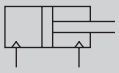

RoHS CAD

Specifications

Item	CMK2			
Bore size	ø20	ø25	ø32	ø40
Actuation	Double acting			
Working fluid	Compressed air			
Max. working pressure MPa	1.0 (≈150 psi, 10 bar)			
Min. working pressure MPa	0.2 (≈29 psi, 2 bar)			
Proof pressure MPa	1.6 (≈230 psi, 16 bar)			
Ambient temperature °C	-10 (14°F) to 60 (140°F) (no freezing)			
Port size	Rc1/8			
Stroke tolerance mm	$^{+2.0}_{0}$(Up to 200), $^{+2.4}_{0}$(More than 200)			
Working piston speed mm/s	50 to 500 (Operate within the absorbed energy.)			
Cushion	Rubber-air cushion			
Lubrication	Not required (use turbine oil class 1 ISO VG32 if necessary for lubrication)			
Allowable absorbed energy J	0.089	0.137	0.179	0.278

Stroke

Bore size (mm)	Standard stroke (mm)	Max. stroke (mm)		Min. stroke (mm)	
		Without bellows	With bellows	Without bellows Bellows "L"	Bellows "J"
ø20	25/50/75/100/ 150/200/250/ 300	750	650	5	25
ø25					
ø32					
ø40					

*1: The custom stroke is available in 1 mm increments.
*2: One side foot (LS) has the max. stroke of 50 mm.
*3: Contact CKD when stroke shorter than 25 mm is necessary for "J" bellows.

Min. stroke with switch

(Unit: mm)

Switch quantity	1					2					3				
	Proximity			Reed		Proximity			Reed		Proximity			Reed	
Bore size (mm)	T2, T3	T2W, T3W	T1, T*Y*	T0, T5	T8	T2, T3	T2W, T3W	T1, T*Y*	T0, T5	T8	T2, T3	T2W, T3W	T1, T*Y*	T0, T5	T8
ø20	10					25	30	35	25	35	50	55	55	50	55
ø25	10					25	30	35	25	35	50	55	55	50	55
ø32	10					25	30	35	25	35	50	55	55	50	55
ø40	10					25	30	35	25	35	50	55	55	50	55

*1: Up to 3 switches can be mounted.

■ Rubber-air cushion mechanism

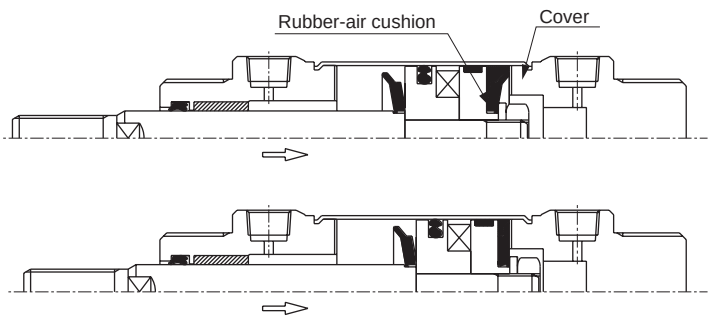

When pulled

An airtight space is created in the ■ area when the piston operates and the rubber-air cushion and cover make contact. Air in the airtight area is further compressed, absorbing energy as the piston operates. At the end of the stroke, energy generated by compression distortion of the air cushion is also added.

Data of the reduction of collision noise level (an example case)

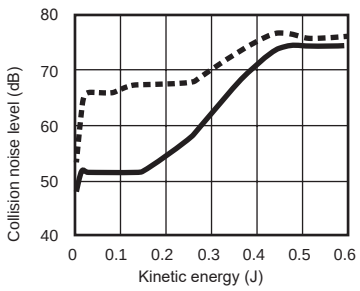

Data of the reduction of collision acceleration level (an example case)

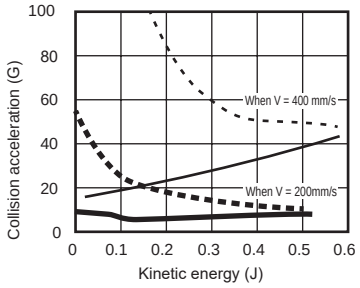

Switch specifications

● 1-color/2-color LED

Item	2-wire proximity	2-wire proximity			3-wire proximity				2-wire reed						
	T1H/T1V	T2H/T2V/ T2JH/T2JV	T2YH/ T2YV	T2WH/ T2WV	T3H/ T3V	T3PH/ T3PV	T3YH/ T3YV	T3WH/ T3WV	T0H/T0V		T5H/T5V		T8H/T8V		
Applications	For programming controller, relay, compact solenoid valve	Dedicated for programmable controller			For programmable controller, relay				For programmable controller, relay		For programmable controller, relay (no lamp), serial		For programmable controller, relay		
Output method	-				NPN output	PNP output	NPN output	NPN output	-						
Pwr. supp. V.	-				10 to 28 VDC				-						
Load voltage	85 to 265 VAC	10 to 30 VDC		24 VDC ±10%	30 VDC or less				12/24 VDC	100/110 VAC	5/12/24 VDC	100/110 VAC	12/24 VDC	110 VAC	220 VAC
Load current	5 to 100 mA	5 to 20 mA (*3)			100 mA or less		50 mA or less		5 to 50 mA	7 to 20 mA	50 mA or less	20 mA or less	5 to 50 mA	7 to 20 mA	7 to 10 mA
Indicator	LED (Lit when ON)	LED (Lit when ON)	Red/green LED (Lit when ON)	Red/green LED (Lit when ON)	LED (Lit when ON)	Yellow LED (Lit when ON)	Red/green LED (Lit when ON)	Red/green LED (Lit when ON)	LED (Lit when ON)		No indicator lamp		LED (Lit when ON)		
Leakage current	≤ 1 mA at 100 VAC, ≤ 2 mA at 200 VAC	1 mA or less			10 μA or less				0 mA						
Weight g	1 m:33 3 m:87 5 m:142	1 m:18 3 m:49 5 m:80	1 m:33 3 m:87 5 m:142	1 m:18 3 m:49 5 m:80	1 m:18 3 m:49 5 m:80		1 m:33 3 m:87 5 m:142	1 m:18 3 m:49 5 m:80	1 m:18 3 m:49 5 m:80				1 m:33 3 m:87 5 m:142		

*1: Refer to Ending Page 1 for detailed switch specifications and dimensions.
*2: Switches other than the above models, such as switches with connectors, are also available. Refer to Ending Page 1.
*3: The max. load current is 20 mA at 25°C. The current is lower than 20 mA if the operating ambient temperature around the switch is higher than 25°C. (5 to 10 mA at 60°C)

Cylinder weight

(Unit: kg)

Item/mounting / Bore size (mm)	Product weight when stroke (S) = 0 mm								Switch weight (per 1 pc.)	Switch rail + band weight	Additional weight per S = 10 mm
	Basic (00)	Axial foot (LB)	Axial foot (LS)	Flange (FA/FB)	Eye bracket (CA)	Clevis (CC)	Clevis bracket (CB)	Trunnion (TA/TB)			
ø20	0.17	0.32	0.25	0.23	0.32	0.18	0.32	0.22	Refer to the weight in the switch specifications.	0.005	0.01
ø25	0.26	0.52	0.39	0.41	0.50	0.26	0.50	0.36		0.005	0.01
ø32	0.30	0.56	0.43	0.45	0.54	0.30	0.54	0.40		0.009	0.02
ø40	0.48	0.74	0.61	0.63	0.72	0.50	0.72	0.64		0.009	0.02

(Example) Product weight of CMK2-FA-32C-50-T0H-D

Product weight when S = 0 mm ..... 0.45 kg
Additional weight when S = 50mm ..... Additional weight when S = 10 mm $0.02 \times \frac{\text{Product stroke (50)}}{10} = 0.10$ kg
Weight of 2 switches ..... 0.036 kg
Weight of switch rail + 2 bands ..... 0.018 kg
Product weight ..... 0.45 kg+0.1 kg+0.036 kg+0.018 kg=0.604 kg

Theoretical thrust table

(Unit: N)

Bore size (mm)	Operating direction	Working pressure MPa								
		0.2	0.3	0.4	0.5	0.6	0.7	0.8	0.9	1.0
ø20	Push	62.8	94.2	1.26×10^2	1.57×10^2	1.88×10^2	2.20×10^2	2.51×10^2	2.83×10^2	3.14×10^2
	Pull	47.1	70.7	94.2	1.18×10^2	1.41×10^2	1.65×10^2	1.88×10^2	2.12×10^2	2.36×10^2
ø25	Push	98.2	1.47×10^2	1.96×10^2	2.45×10^2	2.95×10^2	3.44×10^2	3.93×10^2	4.42×10^2	4.91×10^2
	Pull	75.6	1.13×10^2	1.51×10^2	1.89×10^2	2.27×10^2	2.64×10^2	3.02×10^2	3.40×10^2	3.78×10^2
ø32	Push	1.61×10^2	2.41×10^2	3.22×10^2	4.02×10^2	4.83×10^2	5.63×10^2	6.43×10^2	7.24×10^2	8.04×10^2
	Pull	1.38×10^2	2.07×10^2	2.76×10^2	3.46×10^2	4.15×10^2	4.84×10^2	5.53×10^2	6.22×10^2	6.91×10^2
ø40	Push	2.51×10^2	3.77×10^2	5.03×10^2	6.28×10^2	7.54×10^2	8.80×10^2	1.01×10^3	1.13×10^3	1.26×10^3
	Pull	2.21×10^2	3.31×10^2	4.41×10^2	5.51×10^2	6.62×10^2	7.72×10^2	8.82×10^2	9.92×10^2	1.10×10^3

SCP*3
CMK2
CMA2
SCM
SCG
SCA2
SCS2
CKV2
CAV2/ COVP/N2
SSD2
SSG
SSD
CAT
MDC2
MVC
SMG
MSD/ MSDG
FC*
STK
SRL3
SRG3
SRM3
SRT3
MRL2
MRG2
SM-25
ShkAbs
FJ
FK
Spd Contr
Ending

How to order

● No switch (built-in magnet for switch)

CMK2 - 00 - 20 C - 100 — V Y

● With switch (built-in magnet for switch)

CMK2 - 00 - 20 C - 100 - T0H - R - V Y

Model No. | Ⓐ Mounting *1 | Rubber-air cushioned | Ⓑ Bore size | Ⓒ Port thread | Ⓓ Stroke | Ⓔ Switch model No. * indicates the lead wire length. | Ⓕ Switch quantity *8 | Ⓖ Option *3, *4 | Ⓗ Accessory *5

Code	Description
Ⓐ Mounting	
00	Basic
LB	Axial foot (Both sides)
LS	Axial foot (One side)
FA	Rod side flange
FB	Head side flange
CA	Eye bracket
CC	Eye bracket integrated
CC1	Eye bracket, bush pressfit
CB	Clevis bracket (pin and split washer pin included)
TA	Rod side trunnion
TB	Head side trunnion

Ⓑ Bore size (mm)		
20	ø20	*9
25	ø25	*9
32	ø32	
40	ø40	

Ⓒ Port thread	
Blank	Rc thread
N	NPT thread (made-to-order product)
G	G thread (made-to-order product)

Ⓓ Stroke (mm)		
Bore size	Stroke *2	Custom stroke
ø20	5 to 750	In 1 mm increments
ø25	5 to 750	
ø32	5 to 750	
ø40	5 to 750	

Ⓔ Switch model No.

Axial lead wire	Radial lead wire	Contact	Voltage AC	Voltage DC	Indicator	Lead wire
T0H*	T0V*	Reed	●	●	1-color LED	2-wire
T5H*	T5V*	Reed	●	●	No indicator lamp	2-wire
T8H*	T8V*	Reed	●	●	1-color LED	2-wire
T1H*	T1V*	Proximity	●		1-color LED	2-wire
T2H*	T2V*	Proximity		●	1-color LED	2-wire
T3H*	T3V*	Proximity		●	1-color LED	3-wire
T3PH*	T3PV*	Proximity		●	1-color LED	3-wire
T2WH*	T2WV*	Proximity		●	2-color LED	2-wire
T2YH*	T2YV*	Proximity		●	2-color LED	2-wire
T3WH*	T3WV*	Proximity		●	2-color LED	3-wire
T3YH*	T3YV*	Proximity		●	2-color LED	3-wire
T2JH*	T2JV*	Proximity		●	1-color LED off-delay	2-wire

*** Lead wire length**	
Blank	1 m (standard)
3	3 m (option)
5	5 m (option)

Ⓕ Switch quantity	
R	1 on rod side
H	1 on head side
D	2
T	3

Ⓖ Option

		Max. ambient temp.	Instantaneous max. temp.
J	Bellows	100°C	200°C
L	Bellows	250°C	400°C
F	With push-in fitting (straight)		
FE	With push-in fitting (elbow)		
M	Piston rod material (stainless steel) *9		
V	Boss cutoff		

Ⓗ Accessory	
I	Rod eye
Y	Rod clevis (pin and split washer pin included)
B2	Clevis bracket (pin and snap ring included)

⚠ Precautions for model No. selection

*1 : One side foot (LS) has the max. stroke of 50 mm.
*2 : For the min. stroke with switch and the max. and min. strokes with bellows, refer to page 128.
*3 : The compatible tube O.D. of F (with push-in fitting (straight)) and FE (with push-in fitting (elbow)) is ø6.
*4 : The instantaneous max. temperature is the temperature when sparks, cutting chips, etc., instantaneously contact the bellows.
*5 : "I" and "Y" cannot be selected together.
*6 : Refer to Ending Page 85 for custom specifications of rod end form.
*7 : Refer to page 84 for combination of variations/ options.
*8 : Up to three switches can be installed. If four or more switches are required, switch mounting brackets for the extra switches must be prepared separately.
*9 : For 20 or 25 bore size, the rod is stainless steel as standard and the rod nut is zinc chromate. If a stainless steel rod nut is necessary, select the "M" option code.

[Example of model No.]

CMK2-00-20C-100-T0H-R-VY

Model: Medium bore size cylinder/rubber-air cushioned

Ⓐ Mounting : Basic
Ⓑ Bore size : ø20 mm
Ⓒ Port thread : Rc thread
Ⓓ Stroke : 100 mm
Ⓔ Switch model No. : Proximity switch T0H switch, lead wire 1 m
Ⓕ Switch quantity : 1 on rod side
Ⓖ Option : Boss cutoff
Ⓗ Accessory : Rod clevis

How to order switch

● Switch body + mounting bracket set

CMK2 - T0H - 20

Bore size (Item Ⓑ on page 130)

Switch model No. (Item Ⓔ on page 130)

● Switch body only

SW - T0H

Switch model No. (Item Ⓔ on page 130)

● Mounting bracket set

CMK2 - T - 20

Bore size (Item Ⓑ on page 130)

Mounting bracket

How to order mounting bracket

Bore size (mm) / Mounting bracket	ø20	ø25	ø32	ø40
Basic (00) *3	M1-00-20	M1-00-30	M1-00-30	M1-00-30
Axial foot (LB/LS)	M1-LB-20	M1-LB-30	M1-LB-30	M1-LB-30
Flange (FA/FB)	M1-FA-20	M1-FA-30	M1-FA-30	M1-FA-30
Trunnion (TA/TB)	M1-TA-20	M1-TA-30	M1-TA-30	M1-TA-40
Eye bracket (CA)	M1-CA-20	M1-CA-30	M1-CA-30	M1-CA-30
Clevis bracket (CB)	M1-CB-20	M1-CB-30	M1-CB-30	M1-CB-30

*1: Regarding mounting brackets, mounting nuts and toothed washers are supplied with the axial foot and flange. The trunnion includes mounting nuts.
2: For axial foot (two-sided), 2 sets of “M1-LB-” in the table above are required.
*3: Mounting nut, toothed washer only. Although 1 set is included with the basic of the product (00), use this when needed.

Internal structure and parts list

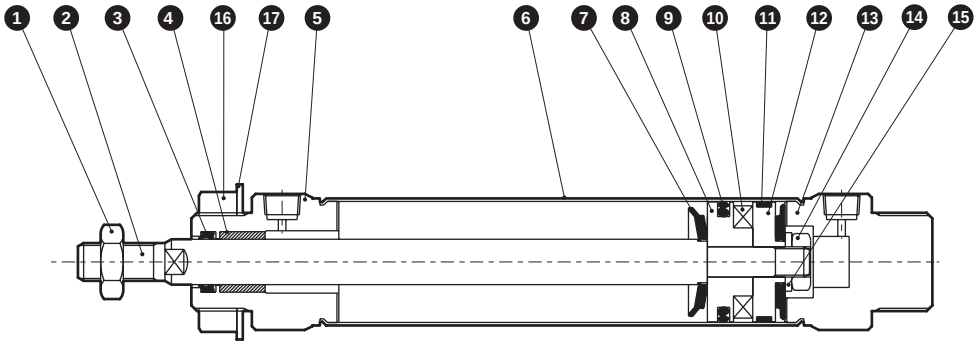

Cannot be disassembled

● Note: This product is caulked and cannot be disassembled.

No.	Part name	Material	Remarks
1	Rod nut	Steel	Zinc chromate
2	Piston rod	ø20/ø25: Stainless steel ø32/ø40: Carbon steel	Industrial chrome plating
3	Rod packing	Nitrile rubber	
4	Bush	ø20: Dry bearing ø25/ø32/ø40: Copper-based	
5	Rod cover	Aluminum alloy	
6	Cylinder tube	Stainless steel	
7	Rubber-air cushion	Special rubber	
8	Piston A	Aluminum alloy	
9	Piston packing	Nitrile rubber	
10	Magnet	Plastic	

No.	Part name	Material	Remarks
11	Wear ring	Polyacetal	
12	Piston B	Aluminum alloy	
13	Head cover	Aluminum alloy	
14	Hexagon nut	Steel	Zinc chromate
15	Spacer	Steel	Zinc chromate
16	Nut	Steel	Zinc chromate
17	Toothed washer	Steel	Zinc chromate

Dimensions

● Basic (00)

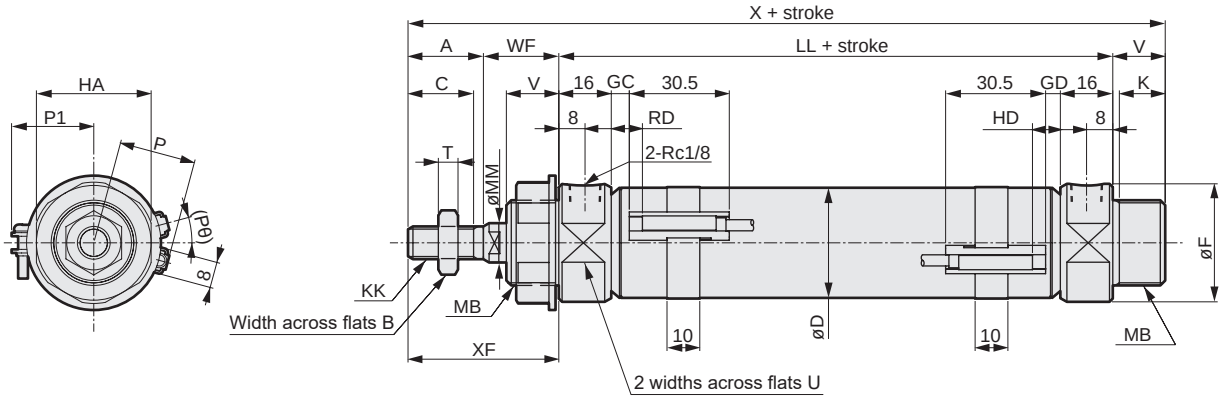

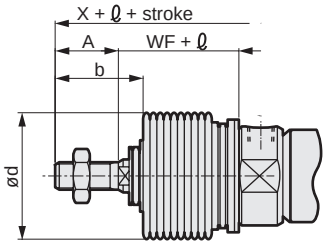

[With bellows]

RD: Rod side max. sensitivity position
HD: Head side max. sensitivity position

1 : Refer to page 198 for HD, RD, and protruding dimensions of T1, T8* and 2-color LED switches.
*2 : For the ℓ dimension, round up below the decimal point.

Code / Bore size (mm)	Basic (00) Basic dimensions															
	A	B	C	D	F	HA	K	KK	LL	MB	MM	T	U	V	WF	X
ø20	20	13	18	21.4	28	26	12	M8x1.0	66	M18x1.5	10	5	24	14	24	124
ø25	23	17	20	26.4	32	35	14	M10x1.25	69	M26x1.5	12	6	30	16	23	131
ø32	23	17	20	33.6	36	35	14	M10x1.25	69	M26x1.5	12	6	34	16	23	131
ø40	25	19	22	41.6	45	35	14	M12x1.5	73	M26x1.5	14	7	43	16	23	137

Code / Bore size (mm)		With switch											With bellows		
	XF	T0, T5, T2, T3				T2W, T3W				P	P1	(Pθ)°	b	d	ℓ
		GC	GD	RD	HD	GC	GD	RD	HD						
ø20	44	4	3	8	7	6	5	10	9	17.3	19.5	22	30	30	(Stroke/3) + 6
ø25	46	5.5	4.5	9.5	8.5	7.5	6.5	11.5	10.5	19.8	22.0	18	32	46	(Stroke/3.25) + 7
ø32	46	5.5	4.5	9.5	8.5	7.5	6.5	11.5	10.5	24.3	25.5	15	32	46	(Stroke/3.25) + 7
ø40	48	7.5	6.5	11.5	10.5	9.5	8.5	13.5	12.5	28.3	29.5	12	34	46	(Stroke/3.25) + 7

* Refer to pages 92 to 97 for mountings other than the basic one (00).
* For the dimensions of the accessories, refer to page 98.

Technical data

[Comparison of collision noise level]

Standard rubber cushion
Rubber-air cushion

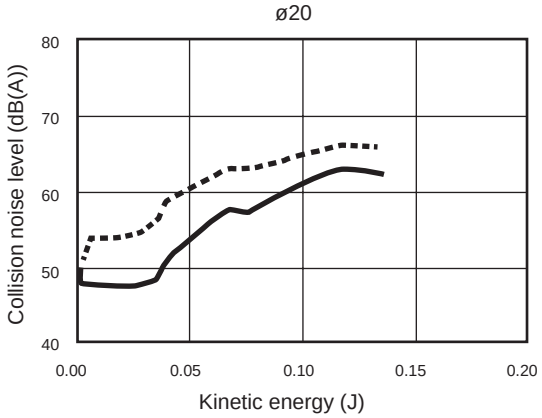

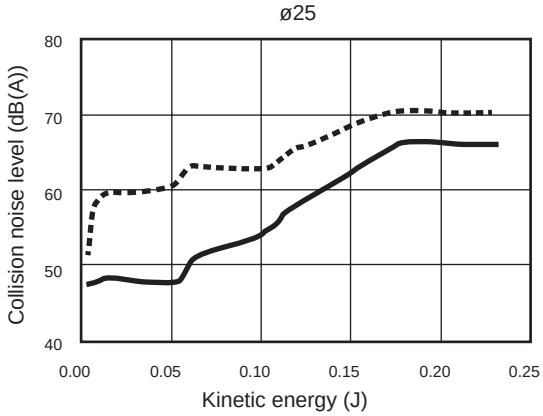

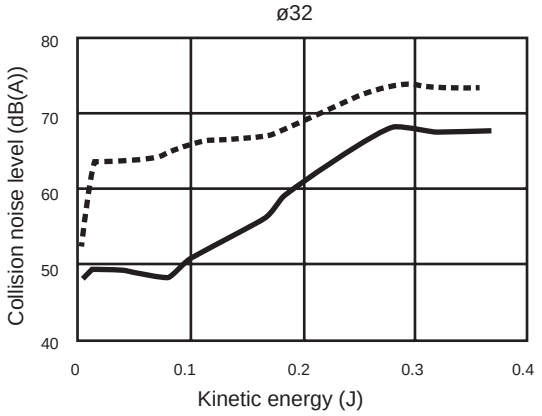

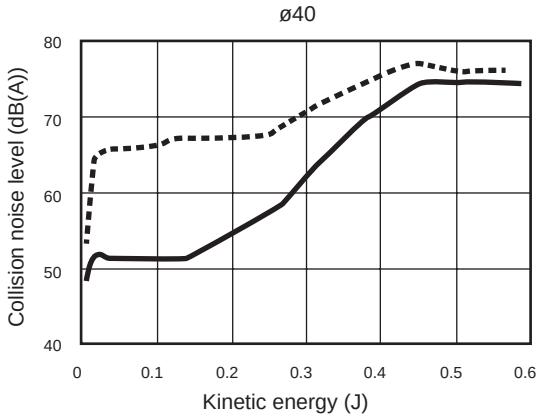

[Comparison of collision acceleration]

Standard rubber cushion
Rubber-air cushion

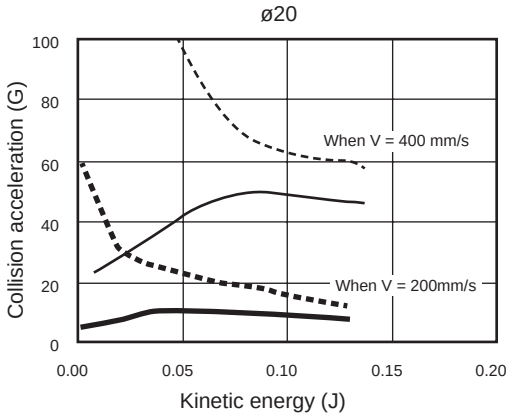

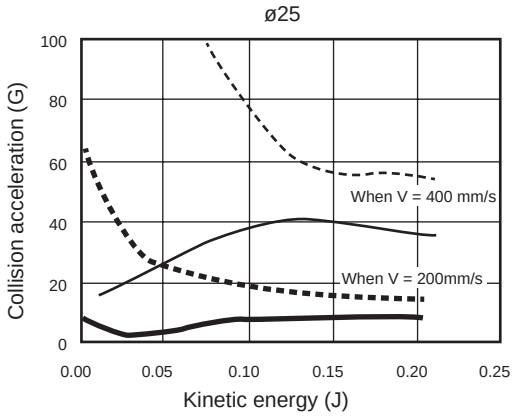

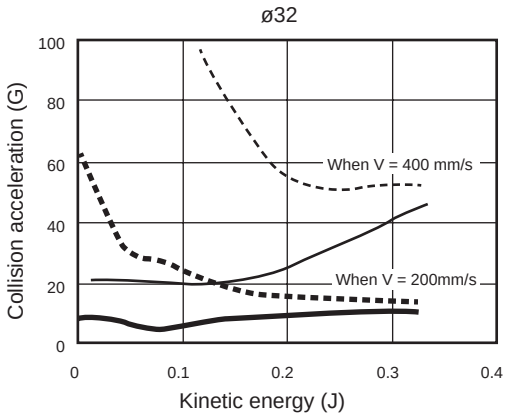

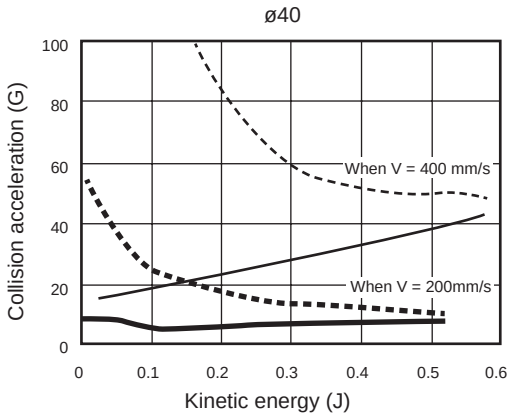

Technical data

[Allowable energy value]

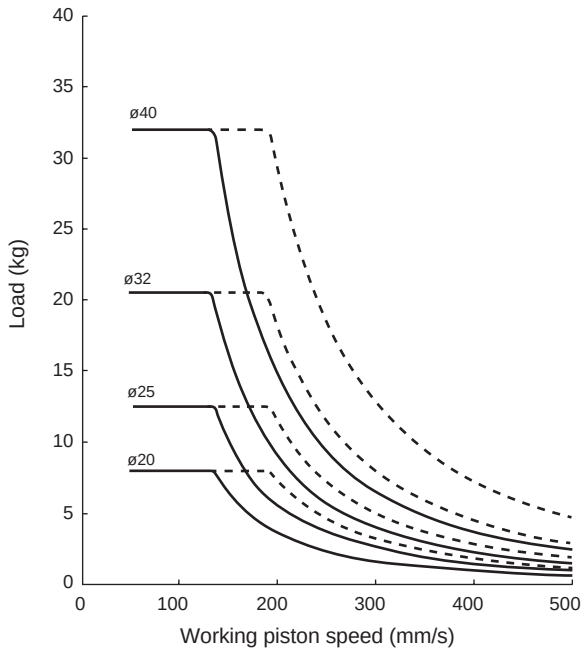

Usable in the range below and to the left of the curve.
Although it can also be used in the range marked with - - - in the figure, we recommend use within the range marked with a solid line to maximize the noise reduction and damping effects.

Medium bore size cylinder
double acting/air cushioned

CMK2-C Series

● Bore size: ø20/ø25/ø32/ø40

JIS symbol

● Double acting

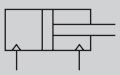

RoHS CAD

Specifications

Item	CMK2-C			
Bore size mm	ø20	ø25	ø32	ø40
Actuation	Double acting/air cushioned			
Working fluid	Compressed air			
Max. working pressure MPa	1.0 (≈150 psi, 10 bar)			
Min. working pressure MPa	0.1 (≈15 psi, 1 bar)			
Proof pressure MPa	1.6 (≈230 psi, 16 bar)			
Ambient temperature °C	-10 (14°F) to 60 (140°F) (no freezing)			
Port size	Rc 1/8			
Stroke tolerance mm	$^{+2.0}_{0}$ (Up to 200), $^{+2.4}_{0}$ (More than 200)			
Working piston speed mm/s	50 to 700			
Cushion	Air cushion			
Effective cushion length mm	12			
Allowable absorbed energy J	0.34	0.46	0.88	1.27
Lubrication	Not required (use turbine oil class 1 ISO VG32 if necessary for lubrication)			

Stroke

Bore size (mm)	Standard stroke (mm)	Max. stroke (mm)		Min. stroke (mm)	
		Without bellows	With bellows	Without bellows Bellows "L"	Bellows "J"
ø20	25/50/75/100/150/200/250/300	750	650	5	25
ø25					
ø32					
ø40					

*1: The custom stroke is available in 1 mm increments.
*2: One side foot (LS) has the max. stroke of 50 mm.
*3: Contact CKD when stroke shorter than 25 mm is required for "J" bellows.

Min. stroke with switch

(Unit: mm)

Switch quantity	1					2					3				
	Proximity			Reed		Proximity			Reed		Proximity			Reed	
Bore size (mm)	T2, T3	T2W, T3W	T1, T*Y*	T0, T5	T8	T2, T3	T2W, T3W	T1, T*Y*	T0, T5	T8	T2, T3	T2W, T3W	T1, T*Y*	T0, T5	T8
ø20	10					25	30	35	25	35	50	55	55	50	55
ø25	10					25	30	35	25	35	50	55	55	50	55
ø32	10					25	30	35	25	35	50	55	55	50	55
ø40	10					25	30	35	25	35	50	55	55	50	55

*1: Up to 3 switches can be mounted.

Switch specifications

● 1-color/2-color LED

Item	2-wire proximity	2-wire proximity			3-wire proximity				2-wire reed						
	T1H/T1V	T2H/T2V/ T2JH/T2JV	T2YH/ T2YV	T2WH/ T2WV	T3H/ T3V	T3PH/ T3PV	T3YH/ T3YV	T3WH/ T3WV	T0H/T0V		T5H/T5V		T8H/T8V		
Applications	For programming controller, relay, compact solenoid valve	Dedicated for programmable controller			For programmable controller, relay				For programmable controller, relay		For programmable controller, relay (no lamp), serial		For programmable controller, relay		
Output method	-				NPN output	PNP output	NPN output	NPN output	-						
Pwr. supp. V.	-				10 to 28 VDC				-						
Load voltage	85 to 265 VAC	10 to 30 VDC		24 VDC ±10%	30 VDC or less				12/24 VDC	100/110 VAC	5/12/24 VDC	100/110 VAC	12/24 VDC	110 VAC	220 VAC
Load current	5 to 100 mA	5 to 20 mA (*3)			100 mA or less		50 mA or less		5 to 50 mA	7 to 20 mA	50 mA or less	20 mA or less	5 to 50 mA	7 to 20 mA	7 to 10 mA
Indicator	LED (Lit when ON)	LED (Lit when ON)	Red/green LED (Lit when ON)	Red/green LED (Lit when ON)	LED (Lit when ON)	Yellow LED (Lit when ON)	Red/green LED (Lit when ON)	Red/green LED (Lit when ON)	LED (Lit when ON)		No indicator lamp		LED (Lit when ON)		
Leakage current	≤ 1 mA at 100 VAC, ≤ 2 mA at 200 VAC	1 mA or less			10 μA or less				0 mA						
Weight g	1 m:33 3 m:87 5 m:142	1 m:18 3 m:49 5 m:80	1 m:33 3 m:87 5 m:142	1 m:18 3 m:49 5 m:80	1 m:18 3 m:49 5 m:80		1 m:33 3 m:87 5 m:142	1 m:18 3 m:49 5 m:80	1 m:18 3 m:49 5 m:80				1 m:33 3 m:87 5 m:142		

*1: Refer to Ending Page 1 for detailed switch specifications and dimensions.
*2: Switches other than the above models, such as switches with connectors, are also available. Refer to Ending Page 1.
*3: The max. load current is 20 mA at 25°C. The current is lower than 20 mA if the operating ambient temperature around the switch is higher than 25˚C. (5 to 10 mA at 60°C)

Cylinder weight

(Unit: kg)

Item/mounting / Bore size (mm)	Product weight when stroke (S) = 0 mm								Switch weight (per 1 pc.)	Switch rail + band weight	Additional weight per S = 10 mm
	Basic (00)	Axial foot (LB)	Axial foot (LS)	Flange (FA/FB)	Eye bracket (CA)	Clevis (CC)	Clevis bracket (CB)	Trunnion (TA/TB)			
ø20	0.17	0.32	0.25	0.23	0.32	0.18	0.32	0.22	Refer to the weight in the switch specifications.	0.005	0.01
ø25	0.26	0.52	0.39	0.41	0.50	0.26	0.50	0.36		0.005	0.01
ø32	0.30	0.56	0.43	0.45	0.54	0.30	0.54	0.40		0.009	0.02
ø40	0.48	0.74	0.61	0.63	0.72	0.50	0.72	0.64		0.009	0.02

(Example) Product weight of CMK2-C-FA-32-50-T0H-D

Product weight when S = 0 mm..... 0.45 kg
Additional weight when S = 50mm ... Additional weight when S = 10 mm 0.02x $\frac{\text{Product stroke (50)}}{10}$ =0.10 kg
Weight of 2 switches..... 0.036 kg
Weight of switch rail + 2 bands..... 0.018 kg.
Product weight..... 0.45 kg+0.1 kg+0.036 kg+0.018 Kg=0.604 kg

Theoretical thrust table

(Unit: N)

Bore size (mm)	Operating direction	Working pressure MPa										
		0.1	0.15	0.2	0.3	0.4	0.5	0.6	0.7	0.8	0.9	1.0
ø20	Push	31.4	47.1	62.8	94.2	$1.26x10^2$	$1.57x10^2$	$1.88x10^2$	$2.20x10^2$	$2.51x10^2$	$2.83x10^2$	$3.14x10^2$
	Pull	23.6	35.3	47.1	70.7	94.2	$1.18x10^2$	$1.41x10^2$	$1.65x10^2$	$1.88x10^2$	$2.12x10^2$	$2.36x10^2$
ø25	Push	49.1	73.6	98.2	$1.47x10^2$	$1.96x10^2$	$2.45x10^2$	$2.95x10^2$	$3.44x10^2$	$3.93x10^2$	$4.42x10^2$	$4.91x10^2$
	Pull	37.8	56.7	75.6	$1.13x10^2$	$1.51x10^2$	$1.89x10^2$	$2.27x10^2$	$2.64x10^2$	$3.02x10^2$	$3.40x10^2$	$3.78x10^2$
ø32	Push	80.4	$1.21x10^2$	$1.61x10^2$	$2.41x10^2$	$3.22x10^2$	$4.02x10^2$	$4.83x10^2$	$5.63x10^2$	$6.43x10^2$	$7.24x10^2$	$8.04x10^2$
	Pull	69.1	$1.04x10^2$	$1.38x10^2$	$2.07x10^2$	$2.76x10^2$	$3.46x10^2$	$4.15x10^2$	$4.84x10^2$	$5.53x10^2$	$6.22x10^2$	$6.91x10^2$
ø40	Push	$1.26x10^2$	$1.88x10^2$	$2.51x10^2$	$3.77x10^2$	$5.03x10^2$	$6.28x10^2$	$7.54x10^2$	$8.80x10^2$	$1.01x10^3$	$1.13x10^3$	$1.26x10^3$
	Pull	$1.10x10^2$	$1.65x10^2$	$2.21x10^2$	$3.31x10^2$	$4.41x10^2$	$5.51x10^2$	$6.62x10^2$	$7.72x10^2$	$8.82x10^2$	$9.92x10^2$	$1.10x10^3$

SCP*3
CMK2
CMA2
SCM
SCG
SCA2
SCS2
CKV2
CAV2/ COVP/N2
SSD2
SSG
SSD
CAT
MDC2
MVC
SMG
MSD/ MSDG
FC*
STK
SRL3
SRG3
SRM3
SRT3
MRL2
MRG2
SM-25
ShkAbs
FJ
FK
Spd Contr
Ending

How to order

No switch (built-in magnet for switch)

CMK2-C - 00 - 20 ◯ - 100 ——— V I

With switch (built-in magnet for switch)

CMK2-C - 00 - 20 ◯ - 100 - T0H - R - V I

Ⓐ Mounting *1

Ⓑ Bore size

Ⓒ Port thread

Ⓓ Stroke

Ⓔ Switch model No.

Ⓕ Switch quantity *8

Ⓖ Option *3, *4

Ⓗ Accessory *5

Code	Description
Ⓐ Mounting	
00	Basic
LB	Axial foot (Both sides)
LS	Axial foot (One side)
FA	Rod side flange
FB	Head side flange
CA	Eye bracket
CC	Eye bracket integrated
CC1	Eye bracket, bush pressfit
CB	Clevis bracket (pin and split washer pin included)
TA	Rod side trunnion
TB	Head side trunnion

Ⓑ Bore size (mm)		
20	ø20	*9
25	ø25	*9
32	ø32	
40	ø40	

Ⓒ Port thread	
Blank	Rc thread
NN	NPT thread (made-to-order product)
GN	G thread (made-to-order product)

Ⓓ Stroke (mm)

Bore size	Stroke *2	Custom stroke
ø20	**5 to 750**	**In 1 mm increments**
ø25	**5 to 750**	
ø32	**5 to 750**	
ø40	**5 to 750**	

Ⓔ Switch model No.

Axial lead wire	Radial lead wire	Contact	Voltage AC	Voltage DC	Indicator	Lead wire
T0H*	**T0V***	Reed	●	●	1-color LED	2-wire
T5H*	**T5V***	Reed	●	●	No indicator lamp	2-wire
T8H*	**T8V***	Reed	●	●	1-color LED	2-wire
T1H*	**T1V***	Proximity	●		1-color LED	2-wire
T2H*	**T2V***	Proximity		●	1-color LED	2-wire
T3H*	**T3V***	Proximity		●	1-color LED	3-wire
T3PH*	**T3PV***	Proximity		●	1-color LED	3-wire
T2WH*	**T2WV***	Proximity		●	2-color LED	2-wire
T2YH*	**T2YV***	Proximity		●	2-color LED	2-wire
T3WH*	**T3WV***	Proximity		●	2-color LED	3-wire
T3YH*	**T3YV***	Proximity		●	2-color LED	3-wire
T2JH*	**T2JV***	Proximity		●	1-color LED off-delay	2-wire

*** Lead wire length**	
Blank	1 m (standard)
3	3 m (option)
5	5 m (option)

Ⓕ Switch quantity	
R	1 on rod side
H	1 on head side
D	2
T	3

Ⓖ Option

		Max. ambient temp.	Instantaneous max. temp.
J	Bellows	100°C	200°C
L	Bellows	250°C	400°C
F	With push-in fitting (straight)		
FE	With push-in fitting (elbow)		
M	Piston rod material (stainless steel) *9		
V	Boss cutoff		

Ⓗ Accessory	
I	Rod eye
Y	Rod clevis (pin and split washer pin included)
B2	Clevis bracket (pin and snap ring included)

⚠ Precautions for model No. selection

*1 : One side foot (LS) has the max. stroke of 50 mm.
*2 : For the min. stroke with switch and the max. and min. strokes with bellows, refer to page 136.
*3 : The compatible tube O.D. of F (with push-in fitting (straight)) and FE (with push-in fitting (elbow)) is ø6.
*4 : The instantaneous max. temperature is the temperature when sparks and cutting chips, etc., instantaneously contact the bellows.
*5 : "I" and "Y" cannot be selected together.
*6 : Refer to Ending Page 85 for custom specifications of rod end form.
*7 : Refer to page 84 for combination of variations/options.
*8 : Up to three switches can be installed. If four or more switches are required, switch mounting brackets for the extra switches must be prepared separately.
*9 : For 20 or 25 bore size, the rod is stainless steel as standard and the rod nut is zinc chromate. If a stainless steel rod nut is necessary, select the "M" option code.

[Example of model No.]

CMK2-C-00-20-100-T0H-R-VI

Model: Medium bore size cylinder, double acting/air cushioned

Ⓐ Mounting : Basic
Ⓑ Bore size : ø20 mm
Ⓒ Port thread : Rc thread
Ⓓ Stroke : 100 mm
Ⓔ Switch model No. : Reed T0H switch, lead wire 1 m
Ⓕ Switch quantity : 1 on rod side
Ⓖ Option : Boss cutoff
Ⓗ Accessory : Rod eye

How to order switch

● Switch body + mounting bracket set

CMK2 - T0H - 20

Bore size (Item Ⓑ on page 138)
Switch model No. (Item Ⓔ on page 138)

● Switch body only

SW - T0H

Switch model No. (Item Ⓔ on page 138)

● Mounting bracket set

CMK2 - T - 20

Bore size (Item Ⓑ on page 138)
Mounting bracket

How to order mounting bracket

Bore size (mm) / Mounting bracket	ø20	ø25	ø32	ø40
Basic (00) *3	M1-00-20	M1-00-30	M1-00-30	M1-00-30
Axial foot (LB/LS)	M1-LB-20	M1-LB-30	M1-LB-30	M1-LB-30
Flange (FA/FB)	M1-FA-20	M1-FA-30	M1-FA-30	M1-FA-30
Trunnion (TA/TB)	M1-TA-20	M1-TA-30	M1-TA-30	M1-TA-40
Eye bracket (CA)	M1-CA-20	M1-CA-30	M1-CA-30	M1-CA-30
Clevis bracket (CB)	M1-CB-20	M1-CB-30	M1-CB-30	M1-CB-30

*1: Regarding mounting brackets, mounting nuts and toothed washers are supplied with the axial foot and flange. The trunnion includes mounting nuts.
2: For axial foot (two-sided), 2 sets of “M1-LB-” in the table above are required.
*3: Mounting nut, toothed washer only. Although 1 set is included with the basic of the product (00), use this when needed.

SCP*3
CMK2
CMA2
SCM
SCG
SCA2
SCS2
CKV2
CAV2/COVP/N2
SSD2
SSG
SSD
CAT
MDC2
MVC
SMG
MSD/MSDG
FC*
STK
SRL3
SRG3
SRM3
SRT3
MRL2
MRG2
SM-25
ShkAbs
FJ
FK
Spd Contr
Ending

Internal structure and parts list

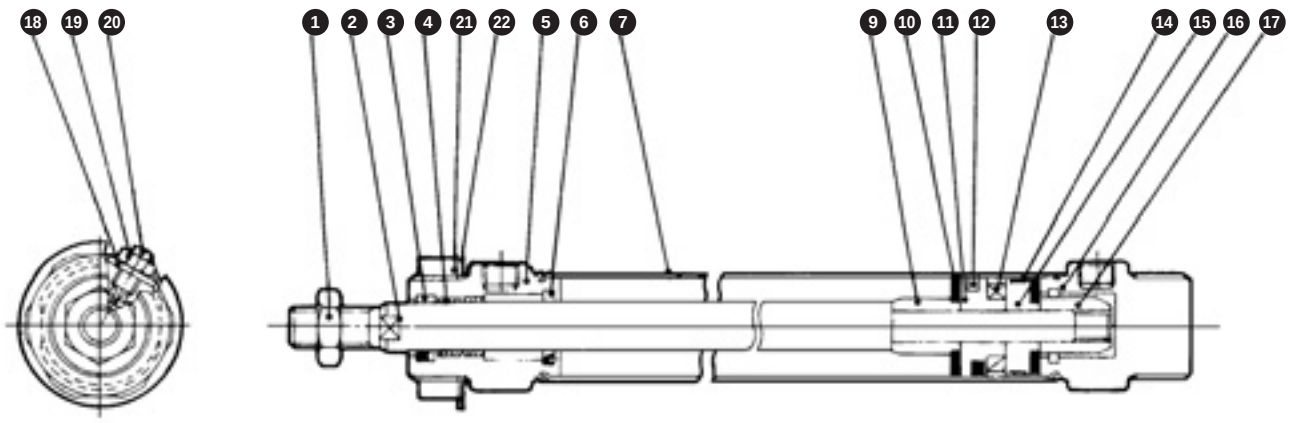

Cannot be disassembled

● Note: This product is caulked and cannot be disassembled.

No.	Part name	Material	Remarks
1	Rod nut	Steel	Zinc chromate
2	Piston rod	ø20, ø25: Stainless steel ø32, ø40: Carbon steel	Industrial chrome plating
3	Rod packing	Nitrile rubber	
4	Bush	ø20, ø25, ø32 : Dry bearing ø40 : Copper-based	
5	Rod cover	Aluminum alloy	
6	Cushion packing	Urethane rubber	
7	Cylinder tube	Stainless steel	
9	Cushion ring A	Aluminum alloy	
10	Cushion rubber	Urethane rubber	
11	Piston A	Aluminum alloy	
12	Piston packing	Nitrile rubber	
13	Magnet	Plastic	

No.	Part name	Material	Remarks
14	Wear ring	Polyacetal	
15	Piston B	Aluminum alloy	
16	Head cover	Aluminum alloy	
17	Cushion ring B	Aluminum alloy	
18	Seal washer	Nitrile rubber, steel	
19	Hexagon nut	Steel	Zinc chromate
20	Cushion needle	Copper	Zinc chromate
21	Nut	Steel	Zinc chromate
22	Toothed washer	Steel	Zinc chromate

Dimensions

● Basic (00)

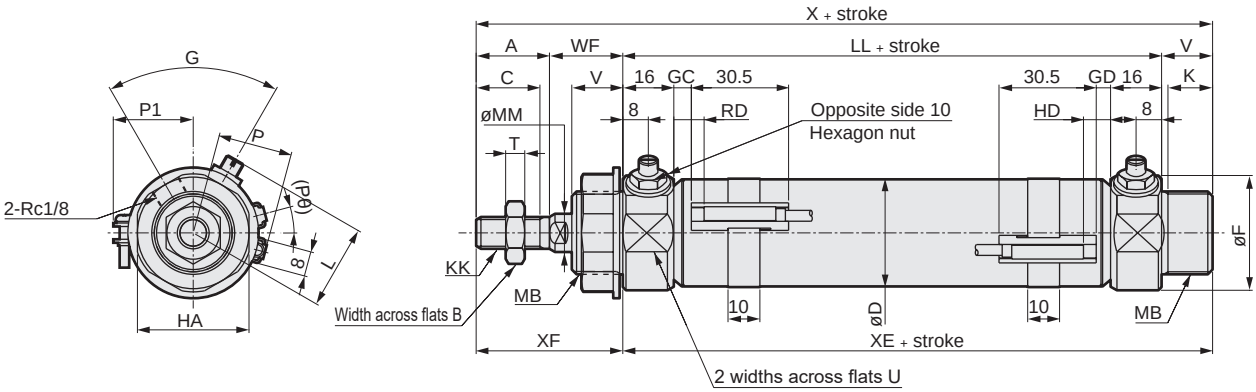

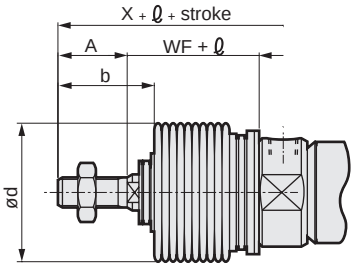

[With bellows]

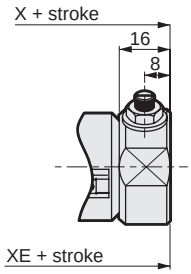

[Boss cutoff]

RD: Rod side max. sensitivity position
HD: Head side max. sensitivity position

1 : Refer to page 198 for HD, RD, and protruding dimensions of T1, T8* and 2-color LED switches.
*2 : For the ℓ dimension, round up below the decimal point.

Code / Bore size (mm)	A	B	C	D	F	G	HA	K	KK	L	LL	MB	MM	T	U	V	WF	X	XE	XF
ø20	20	13	18	21.4	28	70	26	12	M 8x1.0	23 to 25	66	M18x1.5	10	5	24	14	24	124	80	44
ø25	23	17	20	26.4	32	60	35	14	M10x1.25	25 to 27	69	M26x1.5	12	6	30	16	23	131	85	46
ø32	23	17	20	33.6	36	60	35	14	M10x1.25	25 to 26.5	69	M26x1.5	12	6	34	16	23	131	85	46
ø40	25	19	22	41.6	45	60	35	14	M12x1.5	31.5 to 33	73	M26x1.5	14	7	43	16	23	137	89	48

Code	With switch											With bellows			Boss cutoff	
	T0, T5, T2, T3				T2W, T3W				P	P1	(Pθ)°	b	d	ℓ	X	XE
Bore size (mm)	GC	GD	RD	HD	GC	GD	RD	HD								
ø20	4	3	8	7	6	5	10	9	17.3	19.5	22	30	30	(Stroke/3) + 6	110	66
ø25	5.5	4.5	9.5	8.5	7.5	6.5	11.5	10.5	19.8	22.0	18	32	46	(Stroke/3.25) + 7	115	69
ø32	5.5	4.5	9.5	8.5	7.5	6.5	11.5	10.5	24.3	25.5	15	32	46	(Stroke/3.25) + 7	115	69
ø40	7.5	6.5	11.5	10.5	9.5	8.5	13.5	12.5	28.3	29.5	12	34	46	(Stroke/3.25) + 7	121	73

* Dimensions of other mountings are the same as those of the standard. Refer to pages 92 to 97.
* For the dimensions of the accessories, refer to page 98.

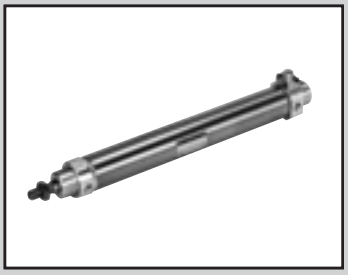

Medium bore size cylinder/
double acting/position locking

CMK2-Q Series

● Bore size: ø20/ø25/ø32/ø40

JIS symbol

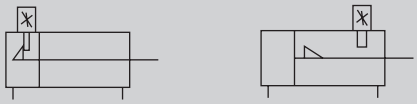

RoHS CAD

Specifications

Item	CMK2-Q			
Bore size mm	ø20	ø25	ø32	ø40
Actuation	Double acting/position locking			
Working fluid	Compressed air			
Max. working pressure MPa	1.0 (≈150 psi, 10 bar)			
Min. working pressure MPa	0.15 (≈22 psi, 1.5 bar)			
Proof pressure MPa	1.6 (≈230 psi, 16 bar)			
Ambient temperature °C	-10 (14°F) to 60 (140°F) (no freezing)			
Port size	Rc 1/8			
Stroke tolerance mm	$^{+2.0}_{0}$(Up to 200), $^{+2.4}_{0}$(More than 200)			
Working piston speed mm/s	50 to 500			
Cushion	Rubber cushion			
Lubrication	Not required (use turbine oil class 1 ISO VG32 if necessary for lubrication)			
Position locking mechanism	Head side or rod side			
Holding force N	Max. thrust x 0.7			
Allowable absorbed energy J	0.166	0.308	0.424	0.639

Stroke

Bore size (mm)	Standard stroke (mm)	Max. stroke (mm)		Min. stroke (mm)	
		Without bellows	With bellows	Without bellows	With bellows
ø20	25/50/75/100/150/200/250/300	750	Not supported	750	Not supported
ø25					
ø32					
ø40					

*1: The custom stroke is available in 1 mm increments.

Min. stroke with switch

(Unit: mm)

Switch quantity	1					2					3				
	Proximity			Reed		Proximity			Reed		Proximity			Reed	
Bore size (mm)	T2, T3	T2W, T3W	T1, T*Y*	T0, T5	T8	T2, T3	T2W, T3W	T1, T*Y*	T0, T5	T8	T2, T3	T2W, T3W	T1, T*Y*	T0, T5	T8
ø20	10					25	30	35	25	35	50	55	55	50	55
ø25	10					25	30	35	25	35	50	55	55	50	55
ø32	10					25	30	35	25	35	50	55	55	50	55
ø40	10					25	30	35	25	35	50	55	55	50	55

*1: Up to 3 switches can be mounted.

⚠ Be sure to read the Safety precautions for the position locking on pages 200 to 203 before use.

Switch specifications

● 1-color/2-color LED

Item	2-wire proximity	2-wire proximity			3-wire proximity				2-wire reed						
	T1H/T1V	T2H/T2V/ T2JH/T2JV	T2YH/ T2YV	T2WH/ T2WV	T3H/ T3V	T3PH/ T3PV	T3YH/ T3YV	T3WH/ T3WV	T0H/T0V		T5H/T5V		T8H/T8V		
Applications	For programming controller, relay, compact solenoid valve	Dedicated for programmable controller			For programmable controller, relay				For programmable controller, relay		For programmable controller, relay (no lamp), serial		For programmable controller, relay		
Output method	-				NPN output	PNP output	NPN output	NPN output	-						
Pwr. supp. V.	-				10 to 28 VDC				-						
Load voltage	85 to 265 VAC	10 to 30 VDC		24 VDC ±10%	30 VDC or less				12/24 VDC	100/110 VAC	5/12/24 VDC	100/110 VAC	12/24 VDC	110 VAC	220 VAC
Load current	5 to 100 mA	5 to 20 mA (*3)			100 mA or less		50 mA or less		5 to 50 mA	7 to 20 mA	50 mA or less	20 mA or less	5 to 50 mA	7 to 20 mA	7 to 10 mA
Indicator	LED (Lit when ON)	LED (Lit when ON)	Red/green LED (Lit when ON)	Red/green LED (Lit when ON)	LED (Lit when ON)	Yellow LED (Lit when ON)	Red/green LED (Lit when ON)	Red/green LED (Lit when ON)	LED (Lit when ON)		No indicator lamp		LED (Lit when ON)		
Leakage current	≤ 1 mA at 100 VAC, ≤ 2 mA at 200 VAC	1 mA or less			10 μA or less				0 mA						
Weight g	1 m:33 3 m:87 5 m:142	1 m:18 3 m:49 5 m:80	1 m:33 3 m:87 5 m:142	1 m:18 3 m:49 5 m:80	1 m:18 3 m:49 5 m:80		1 m:33 3 m:87 5 m:142	1 m:18 3 m:49 5 m:80	1 m:18 3 m:49 5 m:80				1 m:33 3 m:87 5 m:142		

*1: Refer to Ending Page 1 for detailed switch specifications and dimensions.
*2: Switches other than the above models, such as switches with connectors, are also available. Refer to Ending Page 1.
*3: The max. load current is 20 mA at 25°C. The current is lower than 20 mA if the operating ambient temperature around the switch is higher than 25°C. (5 to 10 mA at 60°C)

Cylinder weight

● CMK2-Q-H

(Unit: kg)

Item/mounting / Bore size (mm)	Product weight when stroke (S) = 0 mm								Switch weight (per 1 pc.)	Switch rail + band weight	Additional weight per S = 10 mm
	Basic (00)	Axial foot (LB)	Axial foot (LS)	Flange (FA/FB)	Eye bracket (CA)	Clevis (CC)	Clevis bracket (CB)	Trunnion (TA/TB)			
ø20	0.20	0.35	0.28	0.26	0.35	0.21	0.35	0.25	Refer to the weight in the switch specifications.	0.005	0.01
ø25	0.29	0.55	0.42	0.44	0.53	0.29	0.53	0.39		0.005	0.01
ø32	0.32	0.58	0.45	0.47	0.56	0.32	0.56	0.42		0.009	0.02
ø40	0.51	0.77	0.64	0.66	0.75	0.53	0.75	0.67		0.009	0.02

● CMK2-Q-R

(Unit: kg)

Item/mounting / Bore size (mm)	Product weight when stroke (S) = 0 mm								Switch weight (per 1 pc.)	Switch rail + band weight	Additional weight per S = 10 mm
	Basic (00)	Axial foot (LB)	Axial foot (LS)	Flange (FA/FB)	Eye bracket (CA)	Clevis (CC)	Clevis bracket (CB)	Trunnion (TA/TB)			
ø20	0.19	0.34	0.27	0.25	0.34	0.20	0.34	0.24	Refer to the weight in the switch specifications.	0.005	0.01
ø25	0.29	0.55	0.42	0.44	0.53	0.29	0.53	0.39		0.005	0.01
ø32	0.32	0.58	0.45	0.47	0.56	0.32	0.56	0.42		0.009	0.02
ø40	0.50	0.76	0.63	0.65	0.74	0.52	0.74	0.66		0.009	0.02

(Example) Product weight of CMK2-Q-FA-32-50-R-T0H-D

Product weight when S = 0 mm .....0.47 kg
Additional weight when S = 50mm ..... Additional weight when S = 10 mm $0.02 \times \frac{\text{Product stroke (50)}}{10} = 0.10$ kg
Weight of 2 switches .....0.036 kg
Weight of switch rail + 2 bands .....0.018 kg
Product weight .....0.47 kg + 0.1 kg + 0.036 kg + 0.018 kg = 0.624 kg

Theoretical thrust table

(Unit: N)

Bore size (mm)	Operating direction	Working pressure MPa									
		0.15	0.2	0.3	0.4	0.5	0.6	0.7	0.8	0.9	1.0
ø20	Push	47.1	62.8	94.2	1.26×10^2	1.57×10^2	1.88×10^2	2.20×10^2	2.51×10^2	2.83×10^2	3.14×10^2
	Pull	35.3	47.1	70.7	94.2	1.18×10^2	1.41×10^2	1.65×10^2	1.88×10^2	2.12×10^2	2.36×10^2
ø25	Push	73.6	98.2	1.47×10^2	1.96×10^2	2.45×10^2	2.95×10^2	3.44×10^2	3.93×10^2	4.42×10^2	4.91×10^2
	Pull	56.7	75.6	1.13×10^2	1.51×10^2	1.89×10^2	2.27×10^2	2.64×10^2	3.02×10^2	3.40×10^2	3.78×10^2
ø32	Push	1.21×10^2	1.61×10^2	2.41×10^2	3.22×10^2	4.02×10^2	4.83×10^2	5.63×10^2	6.43×10^2	7.24×10^2	8.04×10^2
	Pull	1.04×10^2	1.38×10^2	2.07×10^2	2.76×10^2	3.46×10^2	4.15×10^2	4.84×10^2	5.53×10^2	6.22×10^2	6.91×10^2
ø40	Push	1.88×10^2	2.51×10^2	3.77×10^2	5.03×10^2	6.28×10^2	7.54×10^2	8.80×10^2	1.01×10^3	1.13×10^3	1.26×10^3
	Pull	1.65×10^2	2.21×10^2	3.31×10^2	4.41×10^2	5.51×10^2	6.62×10^2	7.72×10^2	8.82×10^2	9.92×10^2	1.10×10^3

How to order

No switch (built-in magnet for switch)

CMK2-Q - 00 - 20 ( ) - 25 - R ——— M I

With switch (built-in magnet for switch)

CMK2-Q - 00 - 20 ( ) - 25 - R - T0H - R - M I

Ⓐ Mounting *1

Ⓑ Bore size

Ⓒ Port thread

Ⓓ Stroke

Ⓔ Position locking mechanism

Ⓕ Switch model No.

Ⓖ Switch quantity *7

Ⓗ Option *3 *8

Ⓘ Accessory *4

Code	Description
Ⓐ Mounting	
00	Basic
LB	Axial foot
FA	Rod side flange
FB	Head side flange
CA	Eye bracket
CB	Clevis bracket (pin and split washer pin included)
TA	Rod side trunnion
TB	Head side trunnion

Ⓑ Bore size (mm)		
20	ø20	*9
25	ø25	*9
32	ø32	
40	ø40	

Ⓒ Port thread	
Blank	Rc thread
NN	NPT thread (made-to-order product)
GN	G thread (made-to-order product)

Ⓓ Stroke (mm)

Bore size	Stroke *2	Custom stroke
ø20	**5 to 750**	**In 1 mm increments**
ø25	**5 to 750**	
ø32	**5 to 750**	
ø40	**5 to 750**	

Ⓔ Position locking mechanism	
R	With rod side position locking
H	With head side position locking

Ⓕ Switch model No.

Axial lead wire		Contact	Voltage AC	Voltage DC	Indicator	Lead wire
T0H*	**T0V***	Reed	●	●	1-color LED	2-wire
T5H*	**T5V***	Reed	●	●	No indicator lamp	2-wire
T8H*	**T8V***	Reed	●	●	1-color LED	2-wire
T1H*	**T1V***	Proximity	●		1-color LED	2-wire
T2H*	**T2V***	Proximity		●	1-color LED	2-wire
T3H*	**T3V***	Proximity		●	1-color LED	3-wire
T3PH*	**T3PV***	Proximity		●	1-color LED	3-wire
T2WH*	**T2WV***	Proximity		●	2-color LED	2-wire
T2YH*	**T2YV***	Proximity		●	2-color LED	2-wire
T3WH*	**T3WV***	Proximity		●	2-color LED	3-wire
T3YH*	**T3YV***	Proximity		●	2-color LED	3-wire
T2JH*	**T2JV***	Proximity		●	1-color LED off-delay	2-wire

*** Lead wire length**	
Blank	1 m (standard)
3	3 m (option)
5	5 m (option)

Ⓖ Switch quantity	
R	1 on rod side
H	1 on head side
D	2
T	3

Ⓗ Option	
F	With push-in fitting (straight)
FE	With push-in fitting (elbow)
M	Piston rod material (stainless steel) *9
P6	Copper and PTFE free
M0	Non-locking manual override (with release bolt)
M1	Locking manual override

Ⓘ Accessory	
I	Rod eye
Y	Rod clevis (pin and split washer pin included)
B2	Clevis bracket (pin and snap ring included)

⚠ Precautions for model No. selection

*1 : Rod side position locking of TA and head side position locking of TB are not available.
*2 : Refer to page 142 for min. stroke with switch.
*3 : The compatible tube O.D. of F (with push-in fitting (straight)) and FE (with push-in fitting (elbow)) is ø6.
*4 : "I" and "Y" cannot be selected together.
*5 : Refer to Ending Page 85 for custom specifications of rod end form.
*6 : Refer to page 84 for combination of variations/options.
*7 : Up to three switches can be installed. If four or more switches are required, switch mounting brackets for the extra switches must be prepared separately.
*8 : Only non-locking manual override is available if "M0" or "M1" of Ⓗ Option is not selected. Release bolt is not included.
*9 : For 20 or 25 bore size, the rod is stainless steel as standard and the rod nut is zinc chromate. If a stainless steel rod nut is necessary, select the "M" option code.

[Example of model No.]

CMK2-Q-00-20-25-R-T0H-R-M0Y

Model: Medium bore size cylinder, position locking

Ⓐ Mounting	: Basic
Ⓑ Bore size	: ø20 mm
Ⓒ Port thread	: Rc thread
Ⓓ Stroke	: 25 mm
Ⓔ Position locking mechanism	: With rod side position locking
Ⓕ Switch model No.	: Reed T0H switch, lead wire 1 m
Ⓖ Switch quantity	: 1 on rod side
Ⓗ Option	: Non-locking manual override
Ⓘ Accessory	: Rod clevis

How to order switch

● Switch body + mounting bracket set

CMK2 - T0H - 20

Bore size (Item Ⓑ on page 144)

Switch model No. (Item Ⓕ on page 144)

● Switch body only

SW - T0H

Switch model No. (Item Ⓕ on page 144)

● Mounting bracket set

CMK2 - T - 20

Bore size (Item Ⓑ on page 144)

Mounting bracket

How to order mounting bracket

Bore size (mm) / Mounting bracket	ø20	ø25	ø32	ø40
Basic (00) *3	M1-00-20	M1-00-30	M1-00-30	M1-00-30
Axial foot (LB)	M1-LB-20	M1-LB-30	M1-LB-30	M1-LB-30
Flange (FA/FB)	M1-FA-20	M1-FA-30	M1-FA-30	M1-FA-30
Trunnion (TA/TB)	M1-TA-20	M1-TA-30	M1-TA-30	M1-TA-40
Eye bracket (CA)	M1-CA-20	M1-CA-30	M1-CA-30	M1-CA-30
Clevis bracket (CB)	M1-CB-20	M1-CB-30	M1-CB-30	M1-CB-30

*1: Regarding mounting brackets, mounting nuts and toothed washers are supplied with the axial foot and flange. The trunnion includes mounting nuts.
2: For axial foot (two-sided), 2 sets of "M1-LB-" in the table above are required.
*3: Mounting nut, toothed washer only. Although 1 set is included with the basic of the product (00), use this when needed.

Specifications for rechargeable battery

(Catalog No. CC-1226A)

CMK2-Q - … - P4*

● Design compatible with rechargeable battery manufacturing process

* Contact CKD for details.

Internal structure and parts list

● CMK2-Q (rod side position locking)

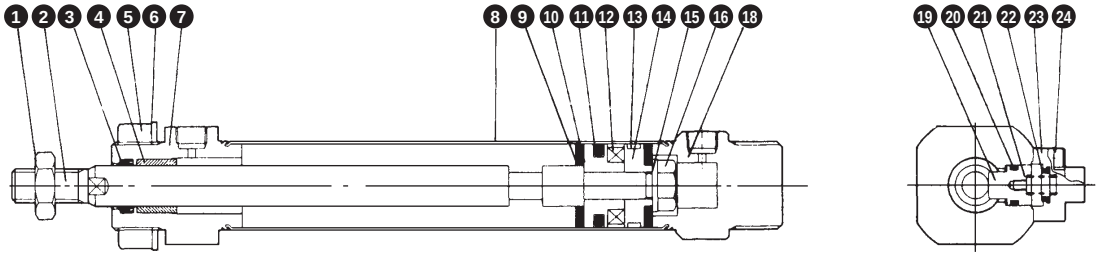

● CMK2-Q (head side position locking)

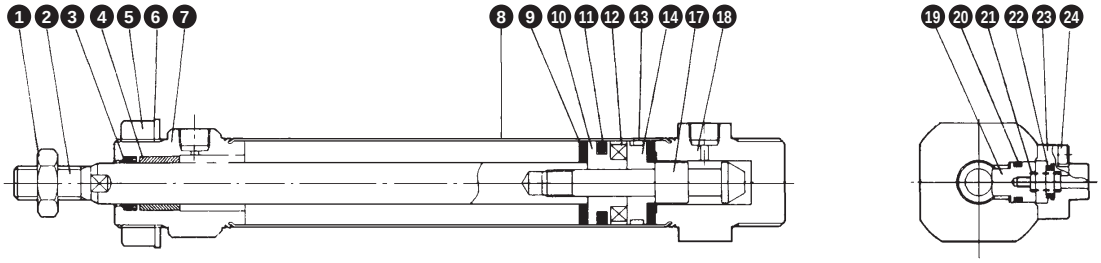

Cannot be disassembled

Note: This product is caulked and cannot be disassembled.

No.	Part name	Material	Remarks	No.	Part name	Material	Remarks
1	Rod nut	Steel	Zinc chromate	12	Magnet	Plastic	
2	Piston rod	ø20, ø25: Stainless steel	Industrial chrome plating	13	Wear ring	Acetal resin	
		ø32, ø40: Steel		14	Piston (B)	Aluminum alloy	
3	Rod packing	Nitrile rubber		15	Spacer	Steel	Zinc chromate
4	Bush	Dry bearing	ø20	16	Nut	Steel	Zinc chromate
		Oil impregnated bearing alloy	ø25, ø32, ø40 *1	17	Sleeve	Steel	Nitriding
5	Nut	Steel	Zinc chromate	18	Head cover	Aluminum alloy	
6	Toothed washer	Steel	Zinc chromate	19	Stopper piston	Steel	Nitriding
7	Rod cover	Aluminum alloy		20	Piston packing (B)	Nitrile rubber	
8	Cylinder tube	Stainless steel		21	Spring	Steel	Paint
9	Cushion rubber (A)	Urethane rubber		22	Cushion rubber (B)	Urethane rubber	
10	Piston (A)	Aluminum alloy		23	Stopper cover	Aluminum alloy die-casting	Chromate
11	Piston packing (A)	Nitrile rubber		24	Hex socket screw	Alloy steel	Zinc chromate

*1: Oleoresin bearing for copper and PTFE free.

[Explanation of manual override]

● Non-locking manual override (option code: M0)

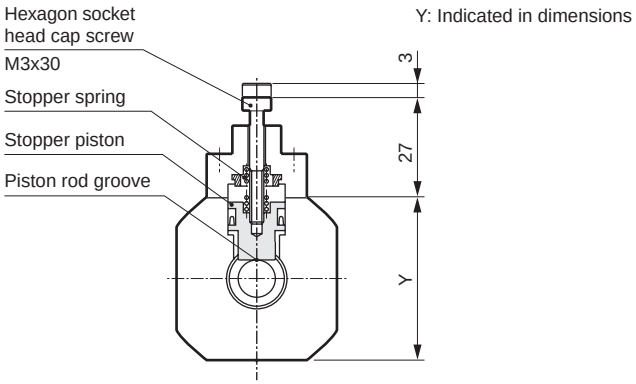

By screwing the hexagon socket head cap screw (M3 x 30) into the stopper piston and pulling the bolt 3 mm with force of 20 N or more, the stopper piston moves and the lock is released. (when horizontally installed with no load and with the opposite side port pressurized). When the screw is released, the internal spring causes the stopper piston to return. When it fits into the piston rod groove, the piston is locked.

● Locking manual override (option code: M1)

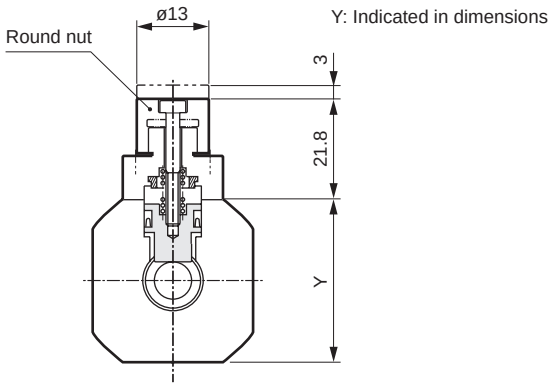

By rotating the round nut leftward (counterclockwise), the stopper piston moves and the lock is released. Rotating the round nut to the right (clockwise) to set it in the locked position causes the stopper piston to return. When it fits into the piston rod groove, the piston is locked.

Dimensions

● Basic (00)
(with rod side position locking)

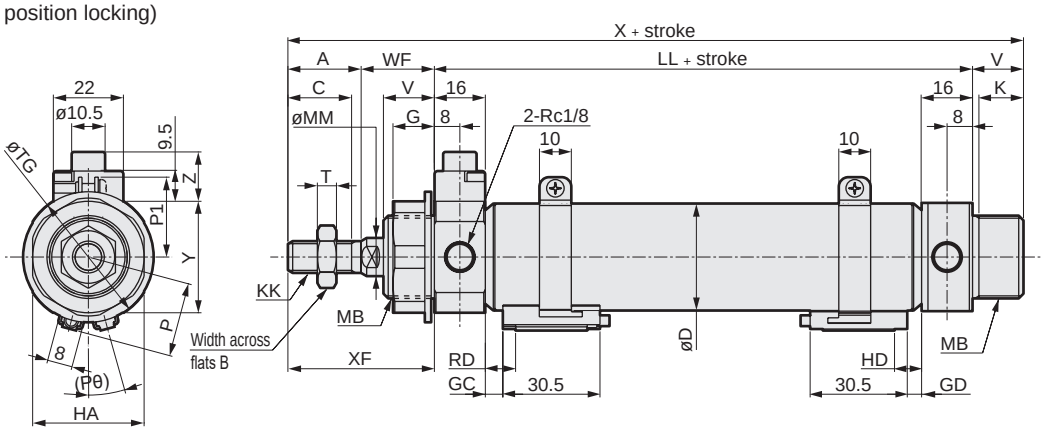

(With head side position locking)

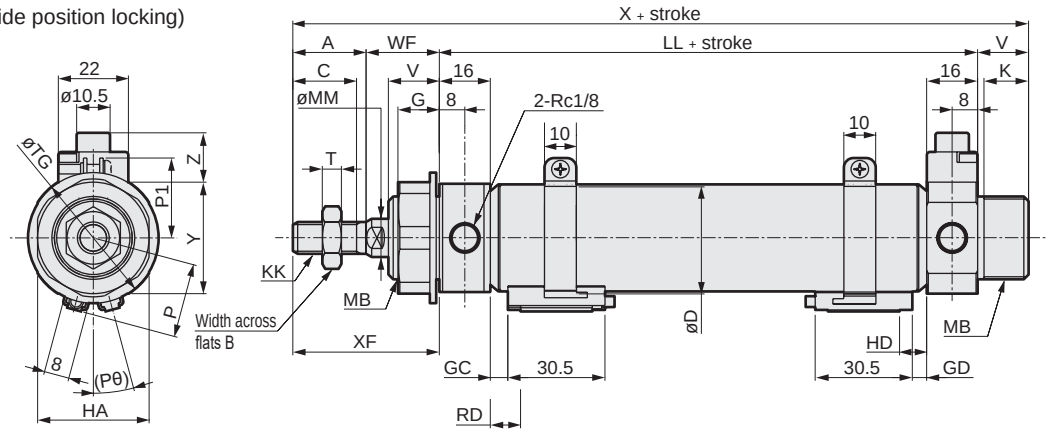

RD: Rod side max. sensitivity position
HD: Head side max. sensitivity position

*1 : For dimensions of the type with manual override, refer to the [Explanation of manual override] figure on the previous page.
2 : Refer to page 198 for HD, RD, and protruding dimensions of T1, T8* and 2-color LED switches.

Code	Basic (00) Basic dimensions										
Bore size (mm)	A	B	C	D	G	HA	K	KK	LL	MB	MM
ø20	20	13	18	21.4	(11)	26	12	M 8x1.0	66	M18x1.5	10
ø25	23	17	20	26.4	(13)	35	14	M10x1.25	69	M26x1.5	12
ø32	23	17	20	33.6	(13)	35	14	M10x1.25	69	M26x1.5	12
ø40	25	19	22	41.6	(13)	35	14	M12x1.5	73	M26x1.5	14

Code									With switch		
									T0, T5, T2, T3		
Bore size (mm)	T	TG	V	WF	X	XF	Y	Z	GC	GD	RD
ø20	5	29	14	24	124	44	31	15.5	4	3	8
ø25	6	41	16	23	131	46	35	15.5	5.5	4.5	9.5
ø32	6	41	16	23	131	46	35	15.5	5.5	4.5	9.5
ø40	7	41	16	23	137	48	43	15.5	7.5	6.5	11.5

Code								
		T2W, T3W						
Bore size (mm)	HD	GC	GD	RD	HD	P	P1	(Pθ)°
ø20	7	6	5	10	9	17.3	19.5	22
ø25	8.5	7.5	6.5	11.5	10.5	19.8	22.0	18
ø32	8.5	7.5	6.5	11.5	10.5	24.3	25.5	15
ø40	10.5	9.5	8.5	13.5	12.5	28.3	29.5	12

* Dimensions of other mountings are the same as those of the standard. Refer to pages 92 to 97.
* For the dimensions of the accessories, refer to page 98.

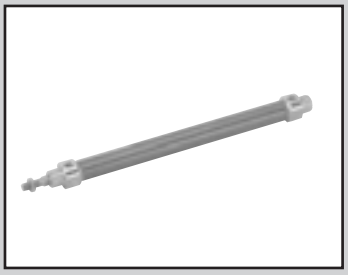

Medium bore size cylinder
double acting/fine speed

CMK2-F Series

● Bore size: ø20/ø25/ø32/ø40

JIS symbol ● Double acting cylinder single rod

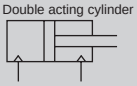

RoHS CAD

Specifications

Item	CMK2-F			
Bore size mm	ø20	ø25	ø32	ø40
Actuation	Double acting			
Working fluid	Compressed air			
Max. working pressure MPa	1.0 (≈150 psi, 10 bar)			
Min. working pressure MPa	0.1 (≈15 psi, 1 bar)			
Proof pressure MPa	1.6 (≈230 psi, 16 bar)			
Ambient temperature °C	5 (41°F) to 60 (140°F)			
Port size	Rc 1/8			
Stroke tolerance mm	$^{+2.0}_{0}$(Up to 200), $^{+2.4}_{0}$(More than 200)			
Working piston speed mm/s	1 to 200			
Cushion	Rubber cushion			
Lubrication	Lubrication not possible			
Allowable absorbed energy J	0.166	0.308	0.424	0.639

Stroke

Bore size (mm)	Standard stroke (mm)	Max. stroke (mm)		Min. stroke (mm)	
		Without bellows	With bellows	Without bellows	With bellows
ø20,ø25, ø32,ø40	25, 50, 75, 100, 150, 200, 250, 300	750	Not supported	5	Not supported

*1: The custom stroke is available in 1 mm increments.
*2: One side foot (LS) has the max. stroke of 50 mm.

Min. stroke with switch

(Unit: mm)

Switch quantity	1					2					3				
	Proximity			Reed		Proximity			Reed		Proximity			Reed	
Bore size (mm)	T2, T3	T2W, T3W	T1, T*Y*	T0, T5	T8	T2, T3	T2W, T3W	T1, T*Y*	T0, T5	T8	T2, T3	T2W, T3W	T1, T*Y*	T0, T5	T8
ø20	10					25	30	35	25	35	50	55	55	50	55
ø25	10					25	30	35	25	35	50	55	55	50	55
ø32	10					25	30	35	25	35	50	55	55	50	55
ø40	10					25	30	35	25	35	50	55	55	50	55

*1: Up to 3 switches can be mounted.

Switch specifications

● 1-color/2-color LED

Item	2-wire proximity	2-wire proximity			3-wire proximity				2-wire reed						
	T1H/T1V	T2H/T2V/ T2JH/T2JV	T2YH/ T2YV	T2WH/ T2WV	T3H/ T3V	T3PH/ T3PV	T3YH/ T3YV	T3WH/ T3WV	T0H/T0V		T5H/T5V		T8H/T8V		
Applications	For programming controller, relay, compact solenoid valve	Dedicated for programmable controller			For programmable controller, relay				For programmable controller, relay		For programmable controller, relay (no lamp), serial		For programmable controller, relay		
Output method	-				NPN output	PNP output	NPN output	NPN output	-						
Pwr. supp. V.	-				10 to 28 VDC				-						
Load voltage	85 to 265 VAC	10 to 30 VDC		24 VDC ±10%	30 VDC or less				12/24 VDC	100/110 VAC	5/12/24 VDC	100/110 VAC	12/24 VDC	110 VAC	220 VAC
Load current	5 to 100 mA	5 to 20 mA (*3)			100 mA or less		50 mA or less		5 to 50 mA	7 to 20 mA	50 mA or less	20 mA or less	5 to 50 mA	7 to 20 mA	7 to 10 mA
Indicator	LED (Lit when ON)	LED (Lit when ON)	Red/green LED (Lit when ON)	Red/green LED (Lit when ON)	LED (Lit when ON)	Yellow LED (Lit when ON)	Red/green LED (Lit when ON)	Red/green LED (Lit when ON)	LED (Lit when ON)		No indicator lamp		LED (Lit when ON)		
Leakage current	≤ 1 mA at 100 VAC, ≤ 2 mA at 200 VAC	1 mA or less			10 μA or less				0 mA						
Weight g	1 m:33 3 m:87 5 m:142	1 m:18 3 m:49 5 m:80	1 m:33 3 m:87 5 m:142	1 m:18 3 m:49 5 m:80	1 m:18 3 m:49 5 m:80		1 m:33 3 m:87 5 m:142	1 m:18 3 m:49 5 m:80	1 m:18 3 m:49 5 m:80				1 m:33 3 m:87 5 m:142		

*1: Refer to Ending Page 1 for detailed switch specifications and dimensions.
*2: Switches other than the above models, such as switches with connectors, are also available. Refer to Ending Page 1.
*3: The max. load current is 20 mA at 25°C. The current is lower than 20 mA if the operating ambient temperature around the switch is higher than 25˚C. (5 to 10 mA at 60°C)

Cylinder weight

(Unit: kg)

Item/mounting / Bore size (mm)	Product weight when stroke (S) = 0 mm								Switch weight (per 1 pc.)	Switch rail + band weight	Additional weight per S = 10 mm
	Basic (00)	Axial foot (LB)	Axial foot (LS)	Flange (FA/FB)	Eye bracket (CA)	Clevis (CC)	Clevis bracket (CB)	Trunnion (TA/TB)			
ø20	0.17	0.32	0.25	0.23	0.32	0.18	0.32	0.22	Refer to the weight in the switch specifications.	0.005	0.01
ø25	0.26	0.52	0.39	0.41	0.50	0.26	0.50	0.36		0.005	0.01
ø32	0.30	0.56	0.43	0.45	0.54	0.30	0.54	0.40		0.009	0.02
ø40	0.48	0.74	0.61	0.63	0.72	0.50	0.72	0.64		0.009	0.02

(Example) Product weight of CMK2-F-FA-32-50-T0H-D

Product weight when S = 0 mm.... 0.45 kg
Additional weight when S = 50mm ....Additional weight when S = 10 mm $0.02 \times \frac{\text{Product stroke (50)}}{10} = 0.10$ kg
Weight of 2 switches..... 0.036 kg
Weight of switch rail + 2 bands.... 0.018 kg
Product weight..... 0.45 kg+0.1 kg+0.036 kg+0.018 kg=0.604 kg

Theoretical thrust table

(Unit: N)

Bore size (mm)	Operating direction	Working pressure MPa										
		0.1	0.15	0.2	0.3	0.4	0.5	0.6	0.7	0.8	0.9	1.0
ø20	Push	31.4	47.1	62.8	94.2	1.26×10^2	1.57×10^2	1.88×10^2	2.20×10^2	2.51×10^2	2.83×10^2	3.14×10^2
	Pull	23.6	35.3	47.1	70.7	94.2	1.18×10^2	1.41×10^2	1.65×10^2	1.88×10^2	2.12×10^2	2.36×10^2
ø25	Push	49.1	73.6	98.2	1.47×10^2	1.96×10^2	2.45×10^2	2.95×10^2	3.44×10^2	3.93×10^2	4.42×10^2	4.91×10^2
	Pull	37.8	56.7	75.6	1.13×10^2	1.51×10^2	1.89×10^2	2.27×10^2	2.64×10^2	3.02×10^2	3.40×10^2	3.78×10^2
ø32	Push	80.4	1.21×10^2	1.61×10^2	2.41×10^2	3.22×10^2	4.02×10^2	4.83×10^2	5.63×10^2	6.43×10^2	7.24×10^2	8.04×10^2
	Pull	69.1	1.04×10^2	1.38×10^2	2.07×10^2	2.76×10^2	3.46×10^2	4.15×10^2	4.84×10^2	5.53×10^2	6.22×10^2	6.91×10^2
ø40	Push	1.26×10^2	1.88×10^2	2.51×10^2	3.77×10^2	5.03×10^2	6.28×10^2	7.54×10^2	8.80×10^2	1.01×10^3	1.13×10^3	1.26×10^3
	Pull	1.10×10^2	1.65×10^2	2.21×10^2	3.31×10^2	4.41×10^2	5.51×10^2	6.62×10^2	7.72×10^2	8.82×10^2	9.92×10^2	1.10×10^3

How to order

● No switch (built-in magnet for switch)

CMK2-F - LB - 20 ( ) - 100 ——— V I

● With switch (built-in magnet for switch)

CMK2-F - LB - 20 ( ) - 100 - T0H - R - V I

Model No. — Ⓐ Mounting *1 — Ⓑ Bore size — Ⓒ Port thread — Ⓓ Stroke — Ⓔ Switch model No. — Ⓕ Switch quantity *6 — Ⓖ Option — Ⓗ Accessory *3

Code	Description
Ⓐ Mounting	
00	Basic
LB	Two-sided axial foot
LS	Axial foot (one side) (rod side)
FA	Rod side flange
FB	Head side flange
CA	Eye bracket
CC	Eye bracket integrated
CB	Clevis bracket (pin and split washer pin included)
TA	Rod side trunnion
TB	Head side trunnion

Ⓑ Bore size (mm)		
20	ø20	*7
25	ø25	*7
32	ø32	
40	ø40	

Ⓒ Port thread	
Blank	Rc thread
NN	NPT thread (made-to-order product)
GN	G thread (made-to-order product)

Ⓓ Stroke (mm)

Bore size	Stroke *2	Custom stroke
ø20	**5 to 750**	**In 1 mm increments**
ø25	**5 to 750**	
ø32	**5 to 750**	
ø40	**5 to 750**	

Ⓔ Switch model No.

Axial lead wire	Radial lead wire	Contact	Voltage AC	Voltage DC	Indicator	Lead wire
T0H*	**T0V***	Reed	●	●	1-color LED	2-wire
T5H*	**T5V***	Reed	●	●	No indicator lamp	2-wire
T8H*	**T8V***	Reed	●	●	1-color LED	2-wire
T1H*	**T1V***	Proximity	●		1-color LED	2-wire
T2H*	**T2V***	Proximity		●	1-color LED	2-wire
T3H*	**T3V***	Proximity		●	1-color LED	3-wire
T3PH*	**T3PV***	Proximity		●	1-color LED	3-wire
T2WH*	**T2WV***	Proximity		●	2-color LED	2-wire
T2YH*	**T2YV***	Proximity		●	2-color LED	2-wire
T3WH*	**T3WV***	Proximity		●	2-color LED	3-wire
T3YH*	**T3YV***	Proximity		●	2-color LED	3-wire
T2JH*	**T2JV***	Proximity		●	1-color LED off-delay	2-wire

*** Lead wire length**	
Blank	1 m (standard)
3	3 m (option)
5	5 m (option)

Ⓕ Switch quantity	
R	1 on rod side
H	1 on head side
D	2
T	3

Ⓖ Option	
M	Piston rod material (stainless steel) *7
V	Boss cutoff

Ⓗ Accessory	
I	Rod eye
Y	Rod clevis (pin and split washer pin included)
B2	Clevis bracket (pin and snap ring included)

⚠ Precautions for model No. selection

*1 : One side foot (LS) has the max. stroke of 50 mm.
*2 : Refer to page 148 for min. stroke with switch.
*3 : "I" and "Y" cannot be selected together.
*4 : Refer to Ending Page 85 for custom specifications of rod end form.
*5 : Refer to page 84 for combination of variations/options.
*6 : Up to three switches can be installed. If four or more switches are required, switch mounting brackets for the extra switches must be prepared separately.
*7 : For 20 or 25 bore size, the rod is stainless steel as standard and the rod nut is zinc chromate. If a stainless steel rod nut is necessary, select the "M" option code.

[Example of model No.]

CMK2-F-LB-20-25-T0H-R-VI

Model: Medium bore size cylinder, fine speed

Ⓐ Mounting	: Two-sided axial foot
Ⓑ Bore size	: ø20 mm
Ⓒ Port thread	: Rc thread
Ⓓ Stroke	: 25 mm
Ⓔ Switch model No.	: Reed switch T0H, lead wire 1 m
Ⓕ Switch quantity	: 1 on rod side
Ⓖ Option	: Boss cutoff
Ⓗ Accessory	: Rod eye

How to order switch

● Switch body + mounting bracket set

CMK2 - T0H - 20

Bore size (Item Ⓑ on page 150)

Switch model No. (Item Ⓔ on page 150)

● Switch body only

SW - T0H

Switch model No. (Item Ⓔ on page 150)

● Mounting bracket set

CMK2 - T - 20

Bore size (Item Ⓑ on page 150)

Mounting bracket

How to order mounting bracket

Bore size (mm) / Mounting bracket	ø20	ø25	ø32	ø40
Basic (00) *3	M1-00-20	M1-00-30	M1-00-30	M1-00-30
Axial foot (LB/LS)	M1-LB-20	M1-LB-30	M1-LB-30	M1-LB-30
Flange (FA/FB)	M1-FA-20	M1-FA-30	M1-FA-30	M1-FA-30
Trunnion (TA/TB)	M1-TA-20	M1-TA-30	M1-TA-30	M1-TA-40
Eye bracket (CA)	M1-CA-20	M1-CA-30	M1-CA-30	M1-CA-30
Clevis bracket (CB)	M1-CB-20	M1-CB-30	M1-CB-30	M1-CB-30

*1: Regarding mounting brackets, mounting nuts and toothed washers are supplied with the axial foot and flange. The trunnion includes mounting nuts.
*2: For axial foot (two-sided), 2 sets of the “M1-LB-*1” in the table above are required.
*3: Mounting nut, toothed washer only. Although 1 set is included with the basic of the product (00), use this when needed.

Dimensions

Same as CMK2 Series (double acting/single rod). Refer to pages 91 to 97.

SCP*3
CMK2
CMA2
SCM
SCG
SCA2
SCS2
CKV2
CAV2/ COVP/N2
SSD2
SSG
SSD
CAT
MDC2
MVC
SMG
MSD/ MSDG
FC*
STK
SRL3
SRG3
SRM3
SRT3
MRL2
MRG2
SM-25
ShkAbs
FJ
FK
Spd Contr
Ending

Measurement data

Measuring method

SSD-F-16-30

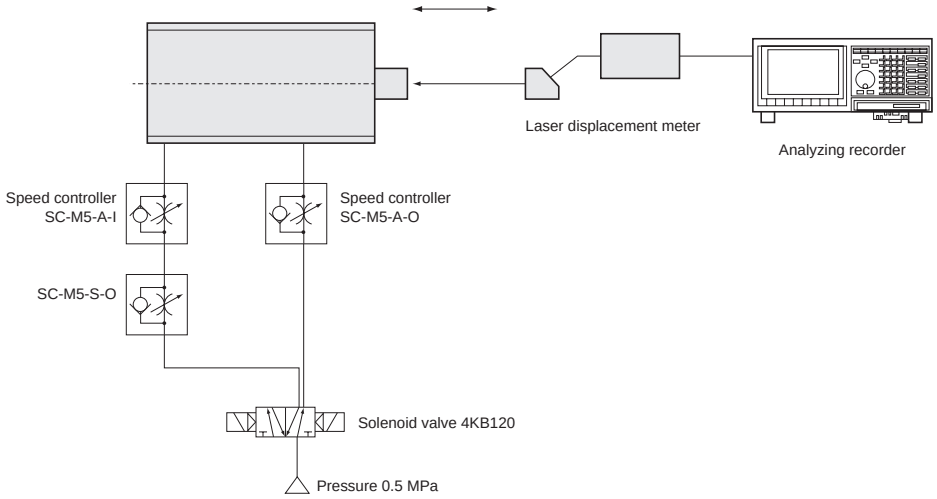

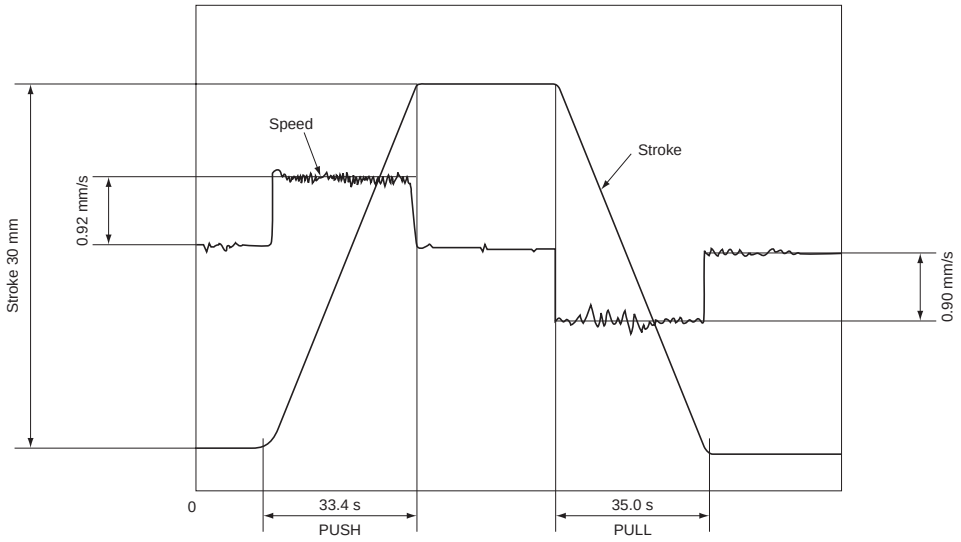

MEMO

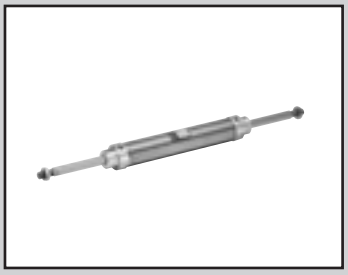

Medium bore size cylinder
double acting/double rod

CMK2-D Series

● Bore size: ø20/ø25/ø32/ø40

JIS symbol ● Double acting cylinder double rod

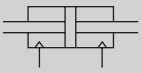

RoHS CAD

Specifications

Item		CMK2-D			
Bore size	mm	ø20	ø25	ø32	ø40
Actuation		Double acting/double rod			
Working fluid		Compressed air			
Max. working pressure	MPa	1.0 (≈150 psi, 10 bar)			
Min. working pressure	MPa	0.15 (≈22 psi, 1.5 bar)			
Proof pressure	MPa	1.6 (≈230 psi, 16 bar)			
Ambient temperature	°C	-10 (14°F) to 60 (140°F) (no freezing)			
Port size		Rc1/8			
Stroke tolerance	mm	$^{+2.0}_{0}$ (Up to 200), $^{+2.4}_{0}$ (More than 200)			
Working piston speed	mm/s	50 to 500			
Cushion		Rubber cushion			
Lubrication		Not required (use turbine oil class 1 ISO VG32 if necessary for lubrication)			
Allowable absorbed energy	J	0.166	0.308	0.424	0.639

Stroke

Bore size (mm)	Standard stroke (mm)	Max. stroke (mm)		Min. stroke (mm)	
		Without bellows	With bellows	Without bellows Bellows "L"	Bellows "J"
ø20	25/50/75/100/150/200/250/300	480	300	5	25
ø25					
ø32					
ø40		450			

*1: The custom stroke is available in 1 mm increments.
*2: One side foot (LS) has the max. stroke of 50 mm.
*3: Contact CKD whenever stroke shorter than 25 mm is necessary for "J" bellows.

Min. stroke with switch

(Unit: mm)

Switch quantity	1					2					3				
	Proximity			Reed		Proximity			Reed		Proximity			Reed	
Bore size (mm)	T2, T3	T2W, T3W	T1, T*Y*	T0, T5	T8	T2, T3	T2W, T3W	T1, T*Y*	T0, T5	T8	T2, T3	T2W, T3W	T1, T*Y*	T0, T5	T8
ø20	10					25	30	35	25	35	50	55	55	50	55
ø25	10					25	30	35	25	35	50	55	55	50	55
ø32	10					25	30	35	25	35	50	55	55	50	55
ø40	10					25	30	35	25	35	50	55	55	50	55

*1: Up to 3 switches can be mounted.

Switch specifications

● 1-color/2-color LED

Item	2-wire proximity	2-wire proximity			3-wire proximity				2-wire reed						
	T1H/T1V	T2H/T2V/ T2JH/T2JV	T2YH/ T2YV	T2WH/ T2WV	T3H/ T3V	T3PH/ T3PV	T3YH/ T3YV	T3WH/ T3WV	T0H/T0V		T5H/T5V		T8H/T8V		
Applications	For programming controller, relay, compact solenoid valve	Dedicated for programmable controller			For programmable controller, relay				For programmable controller, relay		For programmable controller, relay (no lamp), serial		For programmable controller, relay		
Output method	-				NPN output	PNP output	NPN output	NPN output	-						
Pwr. supp. V.	-				10 to 28 VDC				-						
Load voltage	85 to 265 VAC	10 to 30 VDC		24 VDC ±10%	30 VDC or less				12/24 VDC	100/110 VAC	5/12/24 VDC	100/110 VAC	12/24 VDC	110 VAC	220 VAC
Load current	5 to 100 mA	5 to 20 mA (*3)			100 mA or less		50 mA or less		5 to 50 mA	7 to 20 mA	50 mA or less	20 mA or less	5 to 50 mA	7 to 20 mA	7 to 10 mA
Indicator	LED (Lit when ON)	LED (Lit when ON)	Red/green LED (Lit when ON)	Red/green LED (Lit when ON)	LED (Lit when ON)	Yellow LED (Lit when ON)	Red/green LED (Lit when ON)	Red/green LED (Lit when ON)	LED (Lit when ON)		No indicator lamp		LED (Lit when ON)		
Leakage current	≤ 1 mA at 100 VAC, ≤ 2 mA at 200 VAC	1 mA or less			10 μA or less				0 mA						
Weight g	1 m:33 3 m:87 5 m:142	1 m:18 3 m:49 5 m:80	1 m:33 3 m:87 5 m:142	1 m:18 3 m:49 5 m:80	1 m:18 3 m:49 5 m:80		1 m:33 3 m:87 5 m:142	1 m:18 3 m:49 5 m:80	1 m:18 3 m:49 5 m:80				1 m:33 3 m:87 5 m:142		

*1: Refer to Ending Page 1 for detailed switch specifications and dimensions.
*2: Switches other than the above models, such as switches with connectors, are also available. Refer to Ending Page 1.
*3: The max. load current is 20 mA at 25°C. The current is lower than 20 mA if the operating ambient temperature around the switch is higher than 25°C. (5 to 10 mA at 60°C)

Cylinder weight

(Unit: kg)

Item/mounting / Bore size (mm)	Product weight when stroke (S) = 0 mm					Switch weight (per 1 pc.)	Switch rail + band weight	Additional weight per S = 10 mm
	Basic (00)	Axial foot (LB)	Axial foot (LS)	Flange (FA/FB)	Trunnion (TA/TB)			
ø20	0.21	0.36	0.29	0.27	0.26	Refer to the weight in the switch specifications.	0.005	0.02
ø25	0.32	0.58	0.45	0.47	0.42		0.005	0.02
ø32	0.36	0.62	0.49	0.51	0.46		0.009	0.03
ø40	0.57	0.83	0.70	0.72	0.73		0.009	0.03

Theoretical thrust table

(Unit: N)

Bore size (mm)	Operating direction	Working pressure MPa									
		0.15	0.2	0.3	0.4	0.5	0.6	0.7	0.8	0.9	1.0
ø20	Push/Pull	35.3	47.1	70.7	94.2	1.18×10^2	1.41×10^2	1.65×10^2	1.88×10^2	2.12×10^2	2.36×10^2
ø25	Push/Pull	56.7	75.6	1.13×10^2	1.51×10^2	1.89×10^2	2.27×10^2	2.64×10^2	3.02×10^2	3.40×10^2	3.78×10^2
ø32	Push/Pull	1.04×10^2	1.38×10^2	2.07×10^2	2.76×10^2	3.46×10^2	4.15×10^2	4.84×10^2	5.53×10^2	6.22×10^2	6.91×10^2
ø40	Push/Pull	1.65×10^2	2.21×10^2	3.31×10^2	4.41×10^2	5.51×10^2	6.62×10^2	7.72×10^2	8.82×10^2	9.92×10^2	1.10×10^3

How to order

No switch (built-in magnet for switch)

CMK2-D - 00 - 20 ◯ - 100 ——— J I

With switch (built-in magnet for switch)

CMK2-D - 00 - 20 ◯ - 100 - T0H - R - J I

Ⓐ Mounting *1

Ⓑ Bore size

Ⓒ Port thread

Ⓓ Stroke

Ⓔ Switch model No.

Ⓕ Switch quantity *7

Ⓖ Option *3, *4

Ⓗ Accessory

Code	Description
Ⓐ Mounting	
00	Basic
LB	Axial foot (Both sides)
LS	Axial foot (One side)
FA	Rod side flange
TA	Rod side trunnion
Ⓑ Bore size (mm)	
20	ø20 *8
25	ø25 *8
32	ø32
40	ø40
Ⓒ Port thread	
Blank	Rc thread
NN	NPT thread (made-to-order product)
GN	G thread (made-to-order product)

Ⓓ Stroke (mm)

Bore size	Stroke *2	Custom stroke
ø20	**5 to 500**	**In 1 mm increments**
ø25	**5 to 500**	
ø32	**5 to 480**	
ø40	**5 to 450**	

Ⓔ Switch model No.

Axial lead wire	Radial lead wire	Contact	Voltage AC	Voltage DC	Indicator	Lead wire
T0H*	**T0V***	Reed	●	●	1-color LED	2-wire
T5H*	**T5V***	Reed	●	●	No indicator lamp	2-wire
T8H*	**T8V***	Reed	●	●	1-color LED	2-wire
T1H*	**T1V***	Proximity	●		1-color LED	2-wire
T2H*	**T2V***	Proximity		●	1-color LED	2-wire
T3H*	**T3V***	Proximity		●	1-color LED	3-wire
T3PH*	**T3PV***	Proximity		●	1-color LED	3-wire
T2WH*	**T2WV***	Proximity		●	2-color LED	2-wire
T2YH*	**T2YV***	Proximity		●	2-color LED	2-wire
T3WH*	**T3WV***	Proximity		●	2-color LED	3-wire
T3YH*	**T3YV***	Proximity		●	2-color LED	3-wire
T2JH*	**T2JV***	Proximity		●	1-color LED off-delay	2-wire

*** Lead wire length**

Blank	1 m (standard)
3	3 m (option)
5	5 m (option)

Ⓕ Switch quantity

R	1 on rod side
H	1 on head side
D	2
T	3

Ⓖ Option

		Max. ambient temp.	Instantaneous max. temp.
J	Bellows	100°C	200°C
L	Bellows	250°C	400°C
F	With push-in fitting (straight)		
FE	With push-in fitting (elbow)		
M	Piston rod material (stainless steel) *8		
P6	Copper and PTFE free		

Ⓗ Accessory

I	Rod eye
Y	Rod clevis (pin and split washer pin included)
B2	Clevis bracket (pin and snap ring included)

⚠ Precautions for model No. selection

*1 : One side foot (LS) has the max. stroke of 50 mm.
*2 : For the min. stroke with switch and the max. and min. strokes with bellows, refer to page 154.
*3 : The compatible tube O.D. of F (with push-in fitting (straight)) and FE (with push-in fitting (elbow)) is ø6.
*4 : The instantaneous max. temperature is the temperature when sparks and cutting chips, etc., instantaneously contact the bellows.
*5 : Refer to Ending Page 85 for custom specifications of rod end form.
*6 : Refer to page 84 for combination of variations/options.
*7 : Up to three switches can be installed. If four or more switches are required, switch mounting brackets for the extra switches must be prepared separately.
*8 : For 20 or 25 bore size, the rod is stainless steel as standard and the rod nut is zinc chromate. If a stainless steel rod nut is necessary, select the "M" option code.

[Example of model No.]

CMK2-D-00-20-100-T0H-R-JI

Model: Medium bore size cylinder, double acting/double rod

Ⓐ Mounting : Basic
Ⓑ Bore size : ø20 mm
Ⓒ Port thread : Rc thread
Ⓓ Stroke :100 mm
Ⓔ Switch model No. : Reed T0H switch, lead wire 1 m
Ⓕ Switch quantity : 1 on rod side
Ⓖ Option : Bellows, max. ambient temp. 100°C, instantaneous max. temp. 200°C
Ⓗ Accessory : Rod eye

How to order switch

● Switch body + mounting bracket set

CMK2 - T0H - 20

Bore size (Item Ⓑ on page 156)

Switch model No. (Item Ⓔ on page 156)

● Switch body only

SW - T0H

Switch model No. (Item Ⓔ on page 156)

● Mounting bracket set

CMK2 - T - 20

Bore size (Item Ⓑ on page 156)

Mounting bracket

How to order mounting bracket

Bore size (mm) / Mounting bracket	ø20	ø25	ø32	ø40
Basic (00) *3	M1-00-20	M1-00-30	M1-00-30	M1-00-30
Axial foot (LB/LS)	M1-LB-20	M1-LB-30	M1-LB-30	M1-LB-30
Flange (FA)	M1-FA-20	M1-FA-30	M1-FA-30	M1-FA-30
Trunnion (TA)	M1-TA-20	M1-TA-30	M1-TA-30	M1-TA-40

*1: Regarding mounting brackets, mounting nuts and toothed washers are supplied with the axial foot and flange. The trunnion includes mounting nuts.
2: For axial foot (two-sided), 2 sets of “M1-LB-” in the table above are required.
*3: Mounting nut, toothed washer only. Although 1 set is included with the basic of the product (00), use this when needed.

Internal structure and parts list

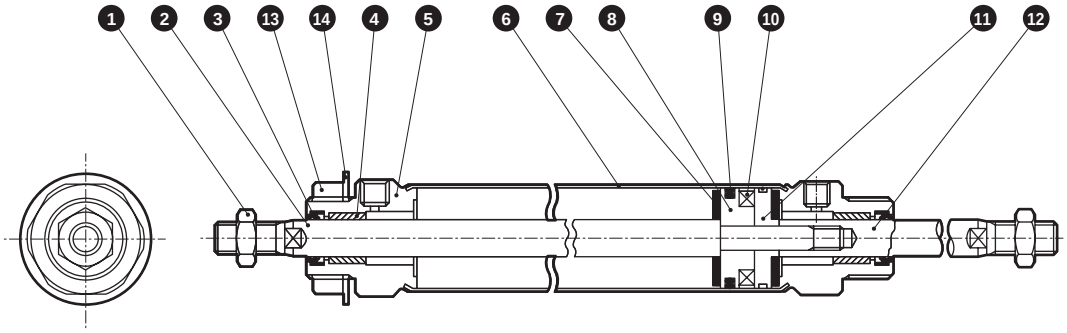

Cannot be disassembled

● Note: This product is caulked and cannot be disassembled.

No.	Part name	Material	Remarks
1	Rod nut	Steel	Zinc chromate
2	Piston rod A	ø20, ø25: Stainless steel ø32, ø40: Carbon steel	Industrial chrome plating
3	Rod packing	Nitrile rubber	
4	Bush	ø20: Dry bearing ø25, ø32, ø40: Copper-based	*1
5	Rod cover	Aluminum alloy	
6	Cylinder tube	Stainless steel	
7	Cushion rubber	Urethane rubber	
8	Piston A	Aluminum alloy	
9	Piston packing	Nitrile rubber	
10	Magnet	Plastic	
11	Piston B	Aluminum alloy	
12	Piston rod B	ø20, ø25: Stainless steel ø32, ø40: Carbon steel	Industrial chrome plating
13	Nut	Steel	Zinc chromate
14	Toothed washer	Steel	Zinc chromate

*1: Oleoresin bearing for copper and PTFE free.

Dimensions

● Basic (00)

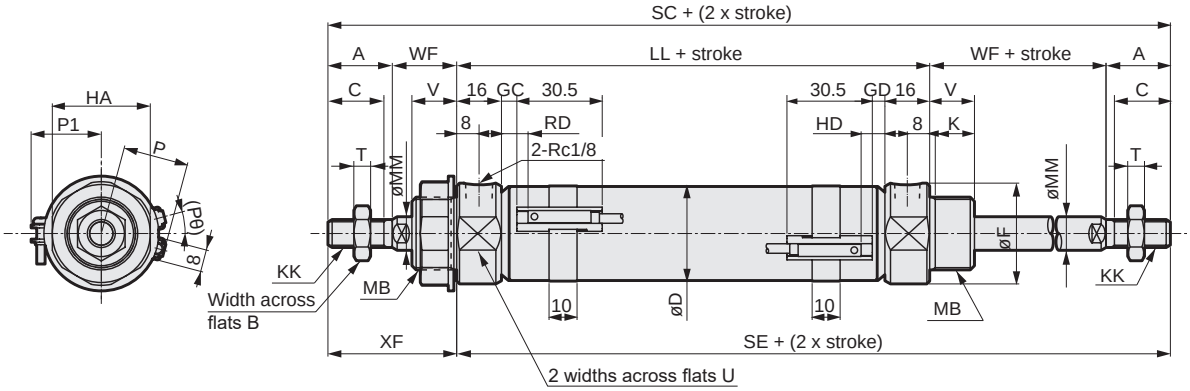

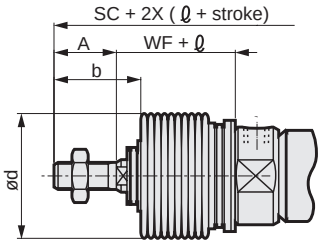

[With bellows]

1 : Refer to page 198 for HD, RD and protruding dimensions of T1, T8* and 2-color LED switches.
*2 : For the ℓ dimension, round up below the decimal point.
*3 : The positions for the left and right widths across flats are unspecified.

RD: Rod side max. sensitivity position
HD: Head side max. sensitivity position

Code / Bore size (mm)	A	B	C	D	F	HA	K	KK	LL	MB	MM	T	U	V	WF	XF	SC	SE	With switch T0, T5, T2, T3 GC	With switch T0, T5, T2, T3 GD
ø20	20	13	18	21.4	28	26	12	M 8x1.0	66	M18x1.5	10	5	24	14	24	44	154	110	4	3
ø25	23	17	20	26.4	32	35	14	M10x1.25	69	M26x1.5	12	6	30	16	23	46	161	115	5.5	4.5
ø32	23	17	20	33.6	36	35	14	M10x1.25	69	M26x1.5	12	6	34	16	23	46	161	115	5.5	4.5
ø40	25	19	22	41.6	45	35	14	M12x1.5	73	M26x1.5	14	7	43	16	23	48	169	121	7.5	6.5

Code / Bore size (mm)			T2W, T3W				P	P1	(Pθ)°	With bellows b	With bellows d	With bellows ℓ
	RD	HD	GC	GD	RD	HD						
ø20	8	7	6	5	10	9	17.3	19.5	22	30	30	(Stroke/3) + 6
ø25	9.5	8.5	7.5	6.5	11.5	10.5	19.8	22.0	18	32	46	(Stroke/3.25) + 7
ø32	9.5	8.5	7.5	6.5	11.5	10.5	24.3	25.5	15	32	46	(Stroke/3.25) + 7
ø40	11.5	10.5	9.5	8.5	13.5	12.5	28.3	29.5	12	34	46	(Stroke/3.25) + 7

* Dimensions of other mountings are the same as those of the standard. Refer to pages 92 to 97.
* For the dimensions of the accessories, refer to page 98.

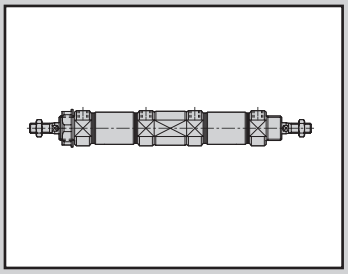

Medium bore size cylinder
double acting/back to back

CMK2-B Series

● Bore size: ø20/ø25/ø32/ø40

JIS symbol ● Double acting cylinder back to back

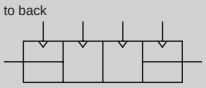

RoHS CAD

Specifications

Item		CMK2-B			
Bore size	mm	ø20	ø25	ø32	ø40
Actuation		Double acting/back to back			
Working fluid		Compressed air			
Max. working pressure	MPa	1.0 (≈150 psi, 10 bar)			
Min. working pressure	MPa	0.1 (≈15 psi, 1 bar)			
Proof pressure	MPa	1.6 (≈230 psi, 16 bar)			
Ambient temperature	°C	-10 (14°F) to 60 (140°F) (no freezing)			
Port size		Rc 1/8			
Stroke tolerance	mm	$^{+2.0}_{0}$ (Up to 200), $^{+2.4}_{0}$ (More than 200)			
Working piston speed	mm/s	50 to 500			
Cushion		Rubber cushion			
Lubrication		Not required (use turbine oil class 1 ISO VG32 if necessary for lubrication)			
Allowable absorbed energy	J	0.166	0.308	0.424	0.639

Stroke

Bore size (mm)	Standard stroke (mm)	Max. stroke (mm)		Min. stroke (mm)	
		Without bellows	With bellows	Without bellows Bellows "L"	Bellows "J"
ø20	25/50/75/100/150/200/250/300	750	650	5	25
ø25					
ø32					
ø40					

*1: The custom stroke is available in 1 mm increments.
*2: Contact CKD when stroke shorter than 25 mm is required for "J" bellows.

Min. stroke with switch

(Unit: mm)

Switch quantity	1					2					3				
	Proximity			Reed		Proximity			Reed		Proximity			Reed	
Bore size (mm)	T2, T3	T2W, T3W	T1, T*Y*	T0, T5	T8	T2, T3	T2W, T3W	T1, T*Y*	T0, T5	T8	T2, T3	T2W, T3W	T1, T*Y*	T0, T5	T8
ø20	10					25	30	35	25	35	50	55	55	50	55
ø25	10					25	30	35	25	35	50	55	55	50	55
ø32	10					25	30	35	25	35	50	55	55	50	55
ø40	10					25	30	35	25	35	50	55	55	50	55

*1: Up to 3 switches can be mounted.

Switch specifications

● 1-color/2-color LED

Item	2-wire proximity	2-wire proximity			3-wire proximity				2-wire reed						
	T1H/T1V	T2H/T2V/ T2JH/T2JV	T2YH/ T2YV	T2WH/ T2WV	T3H/ T3V	T3PH/ T3PV	T3YH/ T3YV	T3WH/ T3WV	T0H/T0V		T5H/T5V		T8H/T8V		
Applications	For programming controller, relay, compact solenoid valve	Dedicated for programmable controller			For programmable controller, relay				For programmable controller, relay		For programmable controller, relay (no lamp), serial		For programmable controller, relay		
Output method	-				NPN output	PNP output	NPN output	NPN output	-						
Pwr. supp. V.	-				10 to 28 VDC				-						
Load voltage	85 to 265 VAC	10 to 30 VDC		24 VDC ±10%	30 VDC or less				12/24 VDC	100/110 VAC	5/12/24 VDC	100/110 VAC	12/24 VDC	110 VAC	220 VAC
Load current	5 to 100 mA	5 to 20 mA (*3)			100 mA or less		50 mA or less		5 to 50 mA	7 to 20 mA	50 mA or less	20 mA or less	5 to 50 mA	7 to 20 mA	7 to 10 mA
Indicator	LED (Lit when ON)	LED (Lit when ON)	Red/green LED (Lit when ON)	Red/green LED (Lit when ON)	LED (Lit when ON)	Yellow LED (Lit when ON)	Red/green LED (Lit when ON)	Red/green LED (Lit when ON)	LED (Lit when ON)		No indicator lamp		LED (Lit when ON)		
Leakage current	≤ 1 mA at 100 VAC, ≤ 2 mA at 200 VAC	1 mA or less			10 μA or less				0 mA						
Weight g	1 m:33 3 m:87 5 m:142	1 m:18 3 m:49 5 m:80	1 m:33 3 m:87 5 m:142	1 m:18 3 m:49 5 m:80	1 m:18 3 m:49 5 m:80		1 m:33 3 m:87 5 m:142	1 m:18 3 m:49 5 m:80	1 m:18 3 m:49 5 m:80				1 m:33 3 m:87 5 m:142		

*1: Refer to Ending Page 1 for detailed switch specifications and dimensions.
*2: Switches other than the above models, such as switches with connectors, are also available. Refer to Ending Page 1.
*3: The max. load current is 20 mA at 25°C. The current is lower than 20 mA if the operating ambient temperature around the switch is higher than 25˚C. (5 to 10 mA at 60°C)

Cylinder weight

(Unit: kg)

Item/mounting / Bore size (mm)	Product weight when stroke (S) = 0 mm			Additional weight			Switch weight (per 1 pc.)	Switch rail + band weight	Additional weight per S = 10 mm
	Basic (00)	Axial foot (LB)	Flange (FA/FB)	Basic (00)	Axial foot (LB)	Flange (FA)			
ø20	0.17	0.32	0.23	0.03	0.18	0.09	Refer to the weight in the switch specifications.	0.005	0.01
ø25	0.26	0.52	0.41	0.03	0.29	0.18		0.005	0.01
ø32	0.30	0.56	0.45	0.05	0.31	0.20		0.009	0.02
ø40	0.48	0.74	0.63	0.10	0.36	0.25		0.009	0.02

(Example) Product weight of CMK2-B-FA-32-50-T0H-D-50-TOH-R
(S_1 S_2)

[S_1 weight]
Product weight when S = 0 mm..... 0.45kg
Additional weight when S = 50 mm.....Additional weight when S = 10 mm 0.02 x $\frac{\text{Product stroke (50)}}{10}$ =0.10 kg
Weight of 2 switches..... 0.036 kg
Weight of switch rail + 2 bands..... 0.018 kg
Weight of S_1.....0.45 kg + 0.1kg + 0.036 kg + 0.018 kg = 0.604 kg

[S_2 weight]
Product weight when S = 0 mm..... 0.45kg
Additional weight when S = 50 mm.....Additional weight when S = 10 mm 0.02 x $\frac{\text{Product stroke (50)}}{10}$ =0.10 kg
Weight of 2 switches..... 0.036 kg
Weight of switch rail + 2 bands..... 0.018 kg
Weight of S_2 .....0.45 kg + 0.10kg + 0.036 kg + 0.018 kg = 0.604 kg
Product weight (S_1 weight + S_2 weight + additional weight).....
….0.604 kg + 0.604 kg + 0.20 kg=1.408 kg

Theoretical thrust table

(Unit: N)

Bore size (mm)	Operating direction	Working pressure MPa										
		0.1	0.15	0.2	0.3	0.4	0.5	0.6	0.7	0.8	0.9	1.0
ø20	Push	31.4	47.1	62.8	94.2	$1.26x10^2$	$1.57x10^2$	$1.88x10^2$	$2.20x10^2$	$2.51x10^2$	$2.83x10^2$	$3.14x10^2$
	Pull	23.6	35.3	47.1	70.7	94.2	$1.18x10^2$	$1.41x10^2$	$1.65x10^2$	$1.88x10^2$	$2.12x10^2$	$2.36x10^2$
ø25	Push	49.1	73.6	98.2	$1.47x10^2$	$1.96x10^2$	$2.45x10^2$	$2.95x10^2$	$3.44x10^2$	$3.93x10^2$	$4.42x10^2$	$4.91x10^2$
	Pull	37.8	56.7	75.6	$1.13x10^2$	$1.51x10^2$	$1.89x10^2$	$2.27x10^2$	$2.64x10^2$	$3.02x10^2$	$3.40x10^2$	$3.78x10^2$
ø32	Push	80.4	$1.21x10^2$	$1.61x10^2$	$2.41x10^2$	$3.22x10^2$	$4.02x10^2$	$4.83x10^2$	$5.63x10^2$	$6.43x10^2$	$7.24x10^2$	$8.04x10^2$
	Pull	69.1	$1.04x10^2$	$1.38x10^2$	$2.07x10^2$	$2.76x10^2$	$3.46x10^2$	$4.15x10^2$	$4.84x10^2$	$5.53x10^2$	$6.22x10^2$	$6.91x10^2$
ø40	Push	$1.26x10^2$	$1.88x10^2$	$2.51x10^2$	$3.77x10^2$	$5.03x10^2$	$6.28x10^2$	$7.54x10^2$	$8.80x10^2$	$1.01x10^3$	$1.13x10^3$	$1.26x10^3$
	Pull	$1.10x10^2$	$1.65x10^2$	$2.21x10^2$	$3.31x10^2$	$4.41x10^2$	$5.51x10^2$	$6.62x10^2$	$7.72x10^2$	$8.82x10^2$	$9.92x10^2$	$1.10x10^3$

SCP*3
CMK2
CMA2
SCM
SCG
SCA2
SCS2
CKV2
CAV2/ COVP/N2
SSD2
SSG
SSD
CAT
MDC2
MVC
SMG
MSD/ MSDG
FC*
STK
SRL3
SRG3
SRM3
SRT3
MRL2
MRG2
SM-25
ShkAbs
FJ
FK
Spd Contr
Ending

How to order

No switch (built-in magnet for switch)

CMK2-B - 00 - 20 ( ) - 25 —— 50 —— J I

With switch (built-in magnet for switch)

CMK2-B - 00 - 20 ( ) - 25 - T0H - D - 50 - T0H - R - J I

Cylinder 1 stroke S1 — Cylinder 2 stroke S2

Cylinder 1 — Cylinder 2

A Mounting B Bore size C Port thread D Stroke D Stroke E Switch model No. E Switch model No. F Switch quantity *7 F Switch quantity G Option *2 *3 H Accessory

Code	Description
A Mounting	
00	Basic
LB	Axial foot (Both sides)
FA	Rod side flange
B Bore size (mm)	
20	ø20 *8
25	ø25 *8
32	ø32
40	ø40
C Port thread	
Blank	Rc thread
NN	NPT thread (made-to-order product)
GN	G thread (made-to-order product)

D Stroke (mm)

Bore size	Stroke *1	Custom stroke
ø20	5 to 750	In 1 mm increments
ø25	5 to 750	
ø32	5 to 750	
ø40	5 to 750	

E Switch model No.

Axial lead wire	Radial lead wire	Contact	Voltage AC	Voltage DC	Indicator	Lead wire
T0H*	T0V*	Reed	●	●	1-color LED	2-wire
T5H*	T5V*	Reed	●	●	No indicator lamp	2-wire
T8H*	T8V*	Reed	●	●	1-color LED	2-wire
T1H*	T1V*	Proximity	●		1-color LED	2-wire
T2H*	T2V*	Proximity		●	1-color LED	2-wire
T3H*	T3V*	Proximity		●	1-color LED	3-wire
T3PH*	T3PV*	Proximity		●	1-color LED	3-wire
T2WH*	T2WV*	Proximity		●	2-color LED	2-wire
T2YH*	T2YV*	Proximity		●	2-color LED	2-wire
T3WH*	T3WV*	Proximity		●	2-color LED	3-wire
T3YH*	T3YV*	Proximity		●	2-color LED	3-wire
T2JH*	T2JV*	Proximity		●	1-color LED off-delay	2-wire

*** Lead wire length**

Blank	1 m (standard)
3	3 m (option)
5	5 m (option)

F Switch quantity

R	1 on rod side
H	1 on head side
D	2
T	3

G Option

		Max. ambient temp.	Instantaneous max. temp.
J	Bellows	100°C	200°C
L	Bellows	250°C	400°C
F	With push-in fitting (straight)		
FE	With push-in fitting (elbow)		
M	Piston rod material (stainless steel) *8		
P6	Copper and PTFE free		

H Accessory

I	Rod eye
Y	Rod clevis (pin and split washer pin included)

Precautions for model No. selection

*1 : For the min. stroke with switch and the max. and min. strokes with bellows, refer to page 160.
*2 : The compatible tube O.D. of F (with push-in fitting (straight)) and FE (with push-in fitting (elbow)) is ø6.
*3 : The instantaneous max. temperature is the temperature when sparks and cutting chips, etc., instantaneously contact the bellows.
*4 : Refer to Ending Page 85 for custom specifications of rod end form.
*5 : Refer to page 84 for combination of variations/ options.
*6 : As a spacer is used for port adjustment in the back to back, the X and M dimensions include 0 to 1.5 mm tolerance.
*7 : Up to three switches can be installed. If four or more switches are required, switch mounting brackets for the extra switches must be prepared separately.
*8 : For 20 or 25 bore size, the rod is stainless steel as standard and the rod nut is zinc chromate. If a stainless steel rod nut is necessary, select the "M" option code.

[Example of model No.]

CMK2-B-00-20-25-T0H-D-50-T0H-R-JI

Model: Medium bore size cylinder, double acting/back to back

A Mounting : Basic
B Bore size : ø20 mm
C Port thread : Rc thread
D Stroke (S1) : 25 mm
E Switch model No. (S1) : Reed T0H switch Lead wire 1 m
F Switch quantity (S1) : 2
D Stroke (S2) : 50 mm
E Switch model No. (S2) : Reed T0H switch, lead wire 1 m
F Switch quantity (S2) : 1 on rod side
G Option : Bellows, max. ambient temp. 100°C, instantaneous max. temp. 200°C
H Accessory : Rod eye

1st stage stroke	25 mm	(S1)
+ 2nd stage stroke	50 mm	(S2)
Total stroke	75 mm	S1 + S2

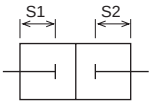

How to order switch

● Switch body + mounting bracket set

CMK2 - T0H - 20

Bore size (Item B on page 162)

Switch model No. (Item E on page 162)

● Switch body only

SW - T0H

Switch model No. (Item E on page 162)

● Mounting bracket set

CMK2 - T - 20

Bore size (Item B on page 162)

Mounting bracket

How to order mounting bracket

Bore size (mm) / Mounting bracket	ø20	ø25	ø32	ø40
Basic (00) *3	M1-00-20	M1-00-30	M1-00-30	M1-00-30
Axial foot (LB)	M1-LB-20	M1-LB-30	M1-LB-30	M1-LB-30
Flange (FA)	M1-FA-20	M1-FA-30	M1-FA-30	M1-FA-30

*1: All mounting brackets are supplied with mounting nuts and toothed washers.
2: For axial foot (two-sided), 2 sets of “M1-LB-” in the table above are required.
*3: Mounting nut, toothed washer only. Although 1 set is included with the basic of the product (00), use this when needed.

Internal structure and parts list

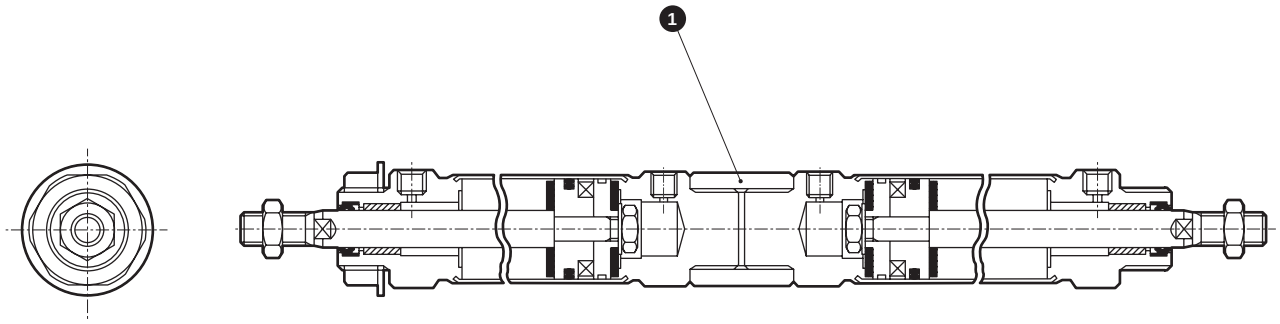

● Note: This product is caulked and cannot be disassembled.

Cannot be disassembled

No.	Part name	Material	Remarks
1	Adaptor	Aluminum alloy	

Applications

Three positions are available when the same strokes are combined.

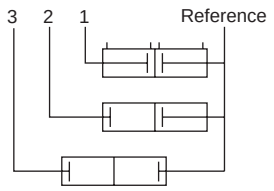

Four positions are available when different strokes are combined.

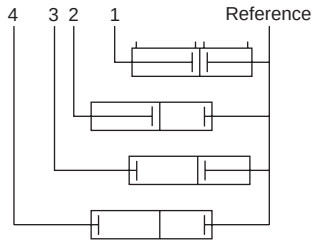

Dimensions

● Basic (00)

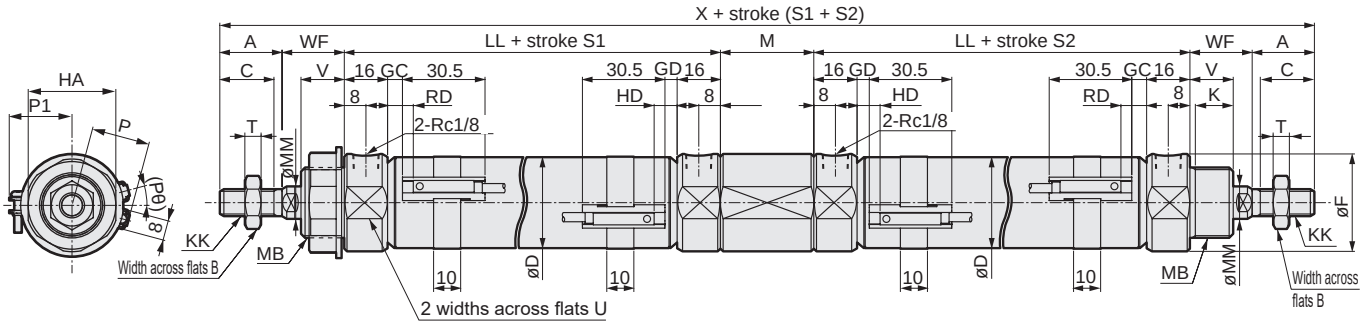

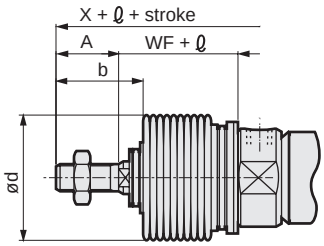

[With bellows]

RD: Rod side max. sensitivity position
HD: Head side max. sensitivity position

1 : Refer to page 198 for HD, RD and protruding dimensions of T1, T8* and 2-color LED switches.
*2 : For the ℓ dimension, round up below the decimal point.

Code	Basic (00) Basic dimensions																
Bore size (mm)	A	B	C	D	F	HA	K	KK	LL	M	MB	MM	T	U	V	WF	X
ø20	20	13	18	21.4	28	26	12	M 8x1.0	66	29 to 30.5	M18x1.5	10	5	24	14	24	249 to 250.5
ø25	23	17	20	26.4	32	35	14	M10x1.25	69	33 to 34.5	M26x1.5	12	6	30	16	23	263 to 264.5
ø32	23	17	20	33.6	36	35	14	M10x1.25	69	33 to 34.5	M26x1.5	12	6	34	16	23	263 to 264.5
ø40	25	19	22	41.6	45	35	14	M12x1.5	73	33 to 34.5	M26x1.5	14	7	43	16	23	275 to 276.5

Code	With switch											With bellows			
	T0, T5, T2, T3				T2W, T3W				P	P1	(Pθ)°	b	d	ℓ	
Bore size (mm)	GC	GD	RD	HD	GC	GD	RD	HD							
ø20	4	3	8	7	6	5	10	9	17.3	19.5	22	30	30	(Stroke/3) + 6	
ø25	5.5	4.5	9.5	8.5	7.5	6.5	11.5	10.5	19.8	22.0	18	32	46	(Stroke/3.25) + 7	
ø32	5.5	4.5	9.5	8.5	7.5	6.5	11.5	10.5	24.3	25.5	15	32	46	(Stroke/3.25) + 7	
ø40	7.5	6.5	11.5	10.5	9.5	8.5	13.5	12.5	28.3	29.5	12	34	46	(Stroke/3.25) + 7	

Note: As a spacer is used for port adjustment in the back to back, the X and M dimensions include 0 to 1.5 mm tolerance.

* Dimensions of other mountings are the same as those of the standard. Refer to pages 92 to 97.
* For the dimensions of the accessories, refer to page 98.

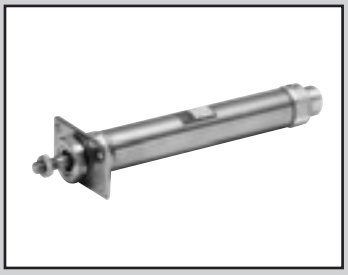

Medium bore size cylinder
double acting/rotation-stop

CMK2-M Series

● Bore size: ø20/ø25/ø32/ø40

JIS symbol ● Double acting, rotation-stop cylinder single rod

RoHS CAD

Specifications

Item	CMK2-M			
Bore size mm	ø20	ø25	ø32	ø40
Actuation	Double acting/rotation-stop			
Working fluid	Compressed air			
Max. working pressure MPa	1.0 (≈150 psi, 10 bar)			
Min. working pressure MPa	0.1 (≈15 psi, 1 bar)			
Proof pressure MPa	1.6 (≈230 psi, 16 bar)			
Ambient temperature °C	-10 (14°F) to 60 (140°F) (no freezing)			
Port size	Rc 1/8			
Stroke tolerance	$^{+2.0}_{0}$ (Up to 200), $^{+2.4}_{0}$ (More than 200)			
Working piston speed mm/s	50 to 500			
Cushion	Rubber cushion			
Lubrication	Not required (use turbine oil class 1 ISO VG32 if necessary for lubrication)			
Non-rotating accuracy (Note) °	±1.5			±1.0
Allowable absorbed energy J	0.166	0.308	0.424	0.639

Note: Value when stroke is 0 mm (except for piston rod deflection)

Stroke

Bore size (mm)	Standard stroke (mm)	Max. stroke (mm)		Min. stroke (mm)	
		Without bellows	With bellows	Without bellows Bellows "L"	Bellows "J"
ø20	25/50/75/100/ 150/200/250/ 300	750	650	5	25
ø25					
ø32					
ø40					

*1: The custom stroke is available in 1 mm increments.
*2: One side foot (LS) has the max. stroke of 50 mm.
*3: Contact CKD when stroke shorter than 25 mm is required for "J" bellows.

Min. stroke with switch

(Unit: mm)

Switch quantity	1					2					3				
	Proximity			Reed		Proximity			Reed		Proximity			Reed	
Bore size (mm)	T2, T3	T2W, T3W	T1, T*Y*	T0, T5	T8	T2, T3	T2W, T3W	T1, T*Y*	T0, T5	T8	T2, T3	T2W, T3W	T1, T*Y*	T0, T5	T8
ø20	10					25	30	35	25	35	50	55	55	50	55
ø25	10					25	30	35	25	35	50	55	55	50	55
ø32	10					25	30	35	25	35	50	55	55	50	55
ø40	10					25	30	35	25	35	50	55	55	50	55

*1: Up to 3 switches can be mounted.

Switch specifications

● 1-color/2-color LED

Item	2-wire proximity	2-wire proximity			3-wire proximity				2-wire reed						
	T1H/T1V	T2H/T2V/ T2JH/T2JV	T2YH/ T2YV	T2WH/ T2WV	T3H/ T3V	T3PH/ T3PV	T3YH/ T3YV	T3WH/ T3WV	T0H/T0V		T5H/T5V		T8H/T8V		
Applications	For programming controller, relay, compact solenoid valve	Dedicated for programmable controller			For programmable controller, relay				For programmable controller, relay		For programmable controller, relay (no lamp), serial		For programmable controller, relay		
Output method	-				NPN output	PNP output	NPN output	NPN output	-						
Pwr. supp. V.	-				10 to 28 VDC				-						
Load voltage	85 to 265 VAC	10 to 30 VDC		24 VDC ±10%	30 VDC or less				12/24 VDC	100/110 VAC	5/12/24 VDC	100/110 VAC	12/24 VDC	110 VAC	220 VAC
Load current	5 to 100 mA	5 to 20 mA (*3)			100 mA or less		50 mA or less		5 to 50 mA	7 to 20 mA	50 mA or less	20 mA or less	5 to 50 mA	7 to 20 mA	7 to 10 mA
Indicator	LED (Lit when ON)	LED (Lit when ON)	Red/green LED (Lit when ON)	Red/green LED (Lit when ON)	LED (Lit when ON)	Yellow LED (Lit when ON)	Red/green LED (Lit when ON)	Red/green LED (Lit when ON)	LED (Lit when ON)		No indicator lamp		LED (Lit when ON)		
Leakage current	≤ 1 mA at 100 VAC, ≤ 2 mA at 200 VAC	1 mA or less			10 μA or less				0 mA						
Weight g	1 m:33 3 m:87 5 m:142	1 m:18 3 m:49 5 m:80	1 m:33 3 m:87 5 m:142	1 m:18 3 m:49 5 m:80	1 m:18 3 m:49 5 m:80		1 m:33 3 m:87 5 m:142	1 m:18 3 m:49 5 m:80	1 m:18 3 m:49 5 m:80				1 m:33 3 m:87 5 m:142		

*1: Refer to Ending Page 1 for detailed switch specifications and dimensions.
*2: Switches other than the above models, such as switches with connectors, are also available. Refer to Ending Page 1.
*3: The max. load current is 20 mA at 25°C. The current is lower than 20 mA if the operating ambient temperature around the switch is higher than 25˚C. (5 to 10 mA at 60°C)

Cylinder weight

(Unit: kg)

Item/mounting / Bore size (mm)	Product weight when stroke (S) = 00mm								Switch weight (per 1 pc.)	Switch rail + band weight	Additional weight per S = 10 mm
	Basic (00)	Axial foot (LB)	Axial foot (LS)	Flange (FA/FB)	Eye bracket (CA)	Clevis (CC)	Clevis bracket (CB)	Trunnion (TA/TB)			
ø20	0.17	0.32	0.25	0.23	0.32	0.18	0.32	0.22	Refer to the weight in the switch specifications.	0.005	0.01
ø25	0.26	0.52	0.39	0.41	0.50	0.26	0.50	0.36		0.005	0.01
ø32	0.30	0.56	0.43	0.45	0.54	0.30	0.54	0.40		0.009	0.02
ø40	0.48	0.74	0.61	0.63	0.72	0.50	0.72	0.64		0.009	0.02

(Example) Product weight of CMK2-M-FA-32-50-T0H-D

Product weight when S = 00mm ....0.45 kg
Additional weight when S = 50mm .....Additional weight when S = 10 mm $0.02 \times \frac{\text{Product stroke (50)}}{10} = 0.10$ kg
Weight of 2 switches .....0.036 kg
Weight of switch rail + 2 bands .....0.018 kg
Product weight .....0.45kg + 0.1 kg + 0.036 kg + 0.018 kg = 0.604kg

Theoretical thrust table

(Unit: N)

Bore size (mm)	Operating direction	Working pressure MPa										
		0.1	0.15	0.2	0.3	0.4	0.5	0.6	0.7	0.8	0.9	1.0
ø20	Push	31.4	47.1	62.8	94.2	1.26×10^2	1.57×10^2	1.88×10^2	2.20×10^2	2.51×10^2	2.83×10^2	3.14×10^2
	Pull	23.6	35.3	47.1	70.7	94.2	1.18×10^2	1.41×10^2	1.65×10^2	1.88×10^2	2.12×10^2	2.36×10^2
ø25	Push	49.1	73.6	98.2	1.47×10^2	1.96×10^2	2.45×10^2	2.95×10^2	3.44×10^2	3.93×10^2	4.42×10^2	4.91×10^2
	Pull	37.8	56.7	75.6	1.13×10^2	1.51×10^2	1.89×10^2	2.27×10^2	2.64×10^2	3.02×10^2	3.40×10^2	3.78×10^2
ø32	Push	80.4	1.21×10^2	1.61×10^2	2.41×10^2	3.22×10^2	4.02×10^2	4.83×10^2	5.63×10^2	6.43×10^2	7.24×10^2	8.04×10^2
	Pull	69.1	1.04×10^2	1.38×10^2	2.07×10^2	2.76×10^2	3.46×10^2	4.15×10^2	4.84×10^2	5.53×10^2	6.22×10^2	6.91×10^2
ø40	Push	1.26×10^2	1.88×10^2	2.51×10^2	3.77×10^2	5.03×10^2	6.28×10^2	7.54×10^2	8.80×10^2	1.01×10^3	1.13×10^3	1.26×10^3
	Pull	1.10×10^2	1.65×10^2	2.21×10^2	3.31×10^2	4.41×10^2	5.51×10^2	6.62×10^2	7.72×10^2	8.82×10^2	9.92×10^2	1.10×10^3

How to order

No switch (built-in magnet for switch)

CMK2-M - 00 - 20 ( ) - 100 ——— V I

With switch (built-in magnet for switch)

CMK2-M - 00 - 20 ( ) - 100 - T0H - R - V I

Ⓐ Mounting *1

Ⓑ Bore size

Ⓒ Port thread

Ⓓ Stroke

Ⓔ Switch model No.

Ⓕ Switch quantity *8

Ⓖ Option *3, *4

Ⓗ Accessory *5

Code	Description
Ⓐ Mounting	
00	Basic
LB	Axial foot (Both sides)
LS	Axial foot (One side)
FA	Rod side flange
FB	Head side flange
CA	Eye bracket
CC	Eye bracket integrated
CC1	Eye bracket, bush pressfit
CB	Clevis bracket (pin and split washer pin included)
TA	Rod side trunnion
TB	Head side trunnion

Ⓑ Bore size (mm)

20	ø20	*9
25	ø25	*9
32	ø32	
40	ø40	

Ⓒ Port thread

Blank	Rc thread
NN	NPT thread (made-to-order product)
GN	G thread (made-to-order product)

Ⓓ Stroke (mm)

Bore size	Stroke *2	Custom stroke
ø20	**5 to 750**	**In 1 mm increments**
ø25	**5 to 750**	
ø32	**5 to 750**	
ø40	**5 to 750**	

Ⓔ Switch model No.

Axial lead wire	Radial lead wire	Contact	Voltage AC	Voltage DC	Indicator	Lead wire
T0H*	**T0V***	Reed	●	●	1-color LED	2-wire
T5H*	**T5V***	Reed	●	●	No indicator lamp	2-wire
T8H*	**T8V***	Reed	●	●	1-color LED	2-wire
T1H*	**T1V***	Proximity	●		1-color LED	2-wire
T2H*	**T2V***	Proximity		●	1-color LED	2-wire
T3H*	**T3V***	Proximity		●	1-color LED	3-wire
T3PH*	**T3PV***	Proximity		●	1-color LED	3-wire
T2WH*	**T2WV***	Proximity		●	2-color LED	2-wire
T2YH*	**T2YV***	Proximity		●	2-color LED	2-wire
T3WH*	**T3WV***	Proximity		●	2-color LED	3-wire
T3YH*	**T3YV***	Proximity		●	2-color LED	3-wire
T2JH*	**T2JV***	Proximity		●	1-color LED off-delay	2-wire

*** Lead wire length**

Blank	1 m (standard)
3	3 m (option)
5	5 m (option)

Ⓕ Switch quantity

R	1 on rod side
H	1 on head side
D	2
T	3

Ⓖ Option

		Max. ambient temp.	Instantaneous max. temp.
J	Bellows	100°C	200°C
L	Bellows	250°C	400°C
F	With push-in fitting (straight)		
FE	With push-in fitting (elbow)		
V	Boss cutoff		
M	Piston rod material (stainless steel) *9		

Ⓗ Accessory

I	Rod eye
Y	Rod clevis (pin and split washer pin included)
B2	Clevis bracket (pin and snap ring included)

⚠ Precautions for model No. selection

*1 : One side foot (LS) has the max. stroke of 50 mm.
*2 : For the min. stroke with switch and the max. and min. strokes with bellows, refer to page 166.
*3 : The compatible tube O.D. of F (with push-in fitting (straight)) and FE (with push-in fitting (elbow)) is ø6.
*4 : The instantaneous max. temperature is the temperature when sparks and cutting chips, etc., instantaneously contact the bellows.
*5 : "I" and "Y" cannot be selected together.
*6 : Refer to Ending Page 85 for custom specifications of rod end form.
*7 : Refer to page 84 for combination of variations/options.
*8 : Up to three switches can be installed. If four or more switches are required, switch mounting brackets for the extra switches must be prepared separately.
*9 : For 20 or 25 bore size, the rod is stainless steel as standard and the rod nut is zinc chromate. If a stainless steel rod nut is necessary, select the "M" option code.

[Example of model No.]

CMK2-M-00-20-100-T0H-R-VI

Model: Medium bore size cylinder, double acting/rotation-stop

Ⓐ Mounting	: Basic
Ⓑ Bore size	: ø20 mm
Ⓒ Port thread	: Rc thread
Ⓓ Stroke	: 100 mm
Ⓔ Switch model No.	: Reed T0H switch, lead wire 1 m
Ⓕ Switch quantity	: 1 on rod side
Ⓖ Option	: Boss cutoff
Ⓗ Accessory	: Rod eye

How to order switch

● Switch body + mounting bracket set

CMK2 - T0H - 20

Bore size (Item Ⓑ on page 168)

Switch model No. (Item Ⓔ on page 168)

● Switch body only

SW - T0H

Switch model No. (Item Ⓔ on page 168)

● Mounting bracket set

CMK2 - T - 20

Bore size (Item Ⓑ on page 168)

Mounting bracket

How to order mounting bracket

Bore size (mm) / Mounting bracket	ø20	ø25	ø32	ø40
Basic (00) *3	M1-00-20	M1-00-30	M1-00-30	M1-00-30
Axial foot (LB/LS)	M1-LB-20	M1-LB-30	M1-LB-30	M1-LB-30
Flange (FA/FB)	M1-FA-20	M1-FA-30	M1-FA-30	M1-FA-30
Trunnion (TA)	M1-TA-20	M1-TA-30	M1-TA-30	M1-TA-40
Eye bracket (CA)	M1-CA-20	M1-CA-30	M1-CA-30	M1-CA-30
Clevis bracket (CB)	M1-CB-20	M1-CB-30	M1-CB-30	M1-CB-30

*1 : Regarding mounting brackets, mounting nuts and toothed washers are supplied with the axial foot and flange. The trunnion includes mounting nuts.
2 : For axial foot (two-sided), 2 sets of “M1-LB-” in the table above are required.
*3 : Mounting nut, toothed washer only. Although 1 set is included with the basic of the product (00), use this when needed.

SCP*3
CMK2
CMA2
SCM
SCG
SCA2
SCS2
CKV2
CAV2/COVP/N2
SSD2
SSG
SSD
CAT
MDC2
MVC
SMG
MSD/MSDG
FC*
STK
SRL3
SRG3
SRM3
SRT3
MRL2
MRG2
SM-25
ShkAbs
FJ
FK
Spd Contr
Ending

Internal structure and parts list

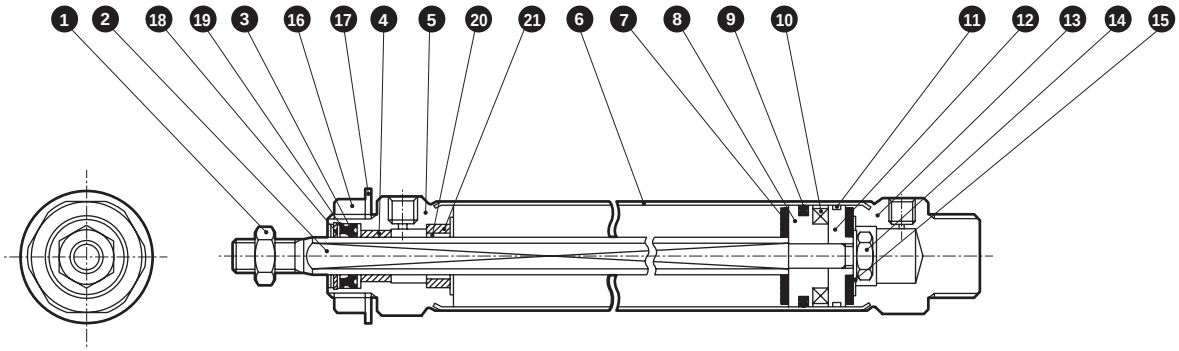

Cannot be disassembled

● Note: This product is caulked and cannot be disassembled.

No.	Part name	Material	Remarks
1	Rod nut	Steel	Zinc chromate
2	Piston rod	Stainless steel	
3	Rod packing	Nitrile rubber	
4	Bush	ø20: Dry bearing ø25, ø32, ø40: Copper-based	
5	Rod cover	Aluminum alloy	
6	Cylinder tube	Stainless steel	
7	Cushion rubber	Urethane rubber	
8	Piston A	Aluminum alloy	
9	Piston packing	Nitrile rubber	
10	Magnet	Plastic	
11	Wear ring	Polyacetal	
12	Piston B	Aluminum alloy	
13	Head cover	Aluminum alloy	
14	Hexagon nut	Steel	Zinc chromate
15	Spacer	Steel	Zinc chromate
16	Nut	Steel	Zinc chromate
17	Toothed washer	Steel	Zinc chromate
18	Round R snap ring	Steel	Zinc phosphate
19	Packing holder	Steel	Zinc chromate
20	Rotation-stop bush	Copper-based oil impregnated alloy	
21	Taper pin	Stainless steel	

Material of mounting bracket

Mounting	Material
LB/LS	Steel
FA/FB	Steel
TA/TB	Steel
CA	Steel
CB	Steel

● Note : Mounting bracket will be shipped with the product.
However, if the product is supplied with bellows and the indicated bracket is LB, FA, or TA, it will be shipped assembled.

Dimensions

● Basic (00)

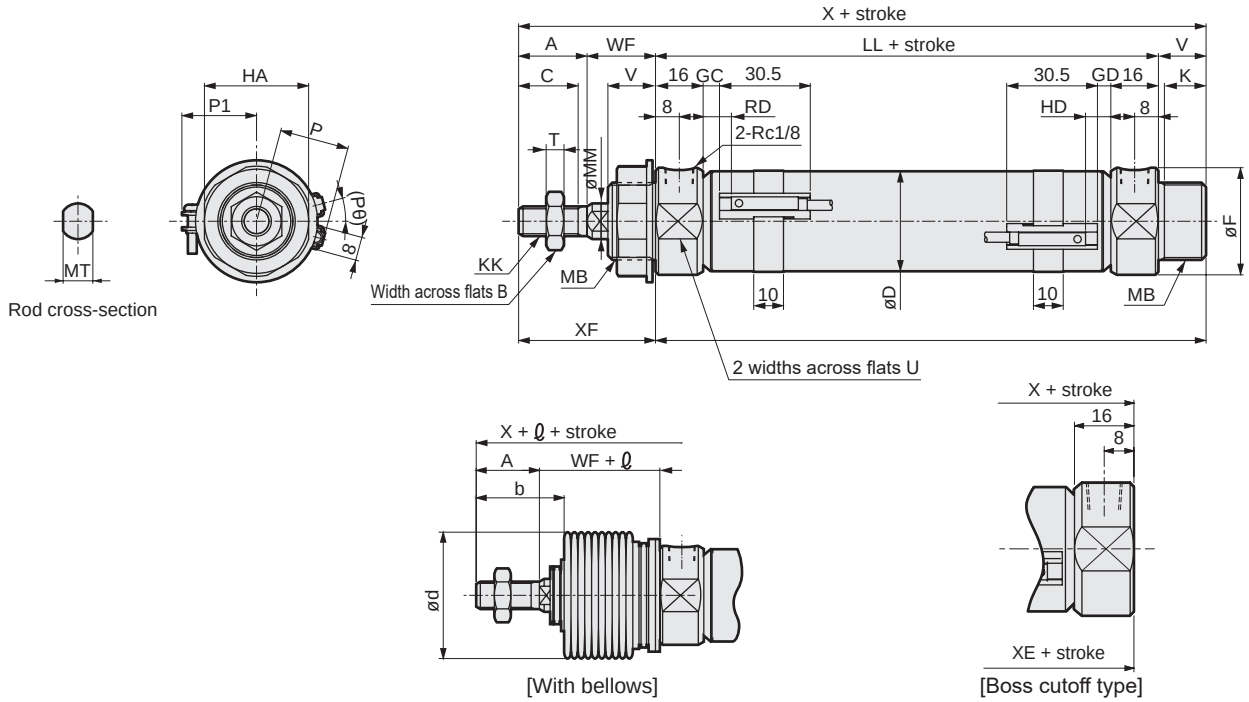

RD: Rod side max. sensitivity position
HD: Head side max. sensitivity position

1 : Refer to page 198 for HD, RD and protruding dimensions of T1, T8* and 2-color LED switches.
*2 : For the ℓ dimension, round up below the decimal point.

Code / Bore size (mm)	A	B	C	D	F	HA	K	KK	LL	MB	MM	MT	T	U	V	WF	X	XE	XF
ø20	20	13	18	21.4	28	26	12	M 8x1.0	66	M18x1.5	10	8	5	24	14	24	124	80	44
ø25	23	17	20	26.4	32	35	14	M10x1.25	69	M26x1.5	12	10	6	30	16	23	131	85	46
ø32	23	17	20	33.6	36	35	14	M10x1.25	69	M26x1.5	12	10	6	34	16	23	131	85	46
ø40	25	19	22	41.6	45	35	14	M12x1.5	73	M26x1.5	14	12	7	43	16	23	137	89	48

Code	With switch											With bellows			Boss cutoff type	
	T0, T5, T2, T3				T2W, T3W				P	P1	(Pθ)°	b	d	ℓ	X	XE
Bore size (mm)	GC	GD	RD	HD	GC	GD	RD	HD								
ø20	4	3	8	7	6	5	10	9	17.3	19.5	22	30	30	(Stroke/3) + 6	110	66
ø25	5.5	4.5	9.5	8.5	7.5	6.5	11.5	10.5	19.8	22.0	18	32	46	(Stroke/3.25) + 7	115	69
ø32	5.5	4.5	9.5	8.5	7.5	6.5	11.5	10.5	24.3	25.5	15	32	46	(Stroke/3.25) + 7	115	69
ø40	7.5	6.5	11.5	10.5	9.5	8.5	13.5	12.5	28.3	29.5	12	34	46	(Stroke/3.25) + 7	121	73

* Dimensions of other mountings are the same as those of the standard. Refer to pages 92 to 97.
* For the dimensions of the accessories, refer to page 98.

Medium bore size cylinder Double acting/built-in speed controller

CMK2-Z Series

● Bore size: ø20/ø25/ø32/ø40

RoHS CAD

Specifications

Item		CMK2-Z			
Bore size	mm	ø20	ø25	ø32	ø40
Actuation		Double acting/built-in speed controller			
Working fluid		Compressed air			
Max. working pressure	MPa	1.0 (≈150 psi, 10 bar)			
Min. working pressure	MPa	0.1 (≈15 psi, 1 bar)			
Proof pressure	MPa	1.6 (≈230 psi, 16 bar)			
Ambient temperature	°C	-10 (14°F) to 60 (140°F) (no freezing)			
Port size		Rc 1/8			
Stroke tolerance	mm	$^{+2.0}_{0}$ (Up to 200), $^{+2.4}_{0}$ (More than 200)			
Working piston speed	mm/s	50 to 300			
Cushion		Rubber cushion			
Lubrication		Not required (use turbine oil class 1 ISO VG32 if necessary for lubrication)			
Allowable absorbed energy	J	0.166	0.308	0.424	0.639

Stroke

Bore size (mm)	Standard stroke (mm)	Max. stroke (mm)		Min. stroke (mm)	
		Without bellows	With bellows	Without bellows Bellows "L"	Bellows "J"
ø20	25/50/75/100/150/200/250/300	750	650	5	25
ø25					
ø32					
ø40					

*1: The custom stroke is available in 1 mm increments.
*2: One side foot (LS) has the max. stroke of 50 mm.
*3: Contact CKD when stroke shorter than 25 mm is required for "J" bellows.

Min. stroke with switch

(Unit: mm)

Switch quantity	1					2					3				
	Proximity			Reed		Proximity			Reed		Proximity			Reed	
Bore size (mm)	T2, T3	T2W, T3W	T1, T*Y*	T0, T5	T8	T2, T3	T2W, T3W	T1, T*Y*	T0, T5	T8	T2, T3	T2W, T3W	T1, T*Y*	T0, T5	T8
ø20	10					25	30	35	25	35	50	55	55	50	55
ø25	10					25	30	35	25	35	50	55	55	50	55
ø32	10					25	30	35	25	35	50	55	55	50	55
ø40	10					25	30	35	25	35	50	55	55	50	55

*1: Up to 3 switches can be mounted.

Switch specifications

● 1-color/2-color LED

Item	2-wire proximity	2-wire proximity			3-wire proximity				2-wire reed						
	T1H/T1V	T2H/T2V/ T2JH/T2JV	T2YH/ T2YV	T2WH/ T2WV	T3H/ T3V	T3PH/ T3PV	T3YH/ T3YV	T3WH/ T3WV	T0H/T0V	T5H/T5V		T8H/T8V			
Applications	For programming controller, relay, compact solenoid valve	Dedicated for programmable controller			For programmable controller, relay				For programmable controller, relay	For programmable controller, relay (no lamp), serial		For programmable controller, relay			
Output method	-				NPN output	PNP output	NPN output	NPN output	-						
Pwr. supp. V.	-				10 to 28 VDC				-						
Load voltage	85 to 265 VAC	10 to 30 VDC		24 VDC ±10%	30 VDC or less				12/24 VDC	100/110 VAC	5/12/24 VDC	100/110 VAC	12/24 VDC	110 VAC	220 VAC
Load current	5 to 100 mA	5 to 20 mA (*3)			100 mA or less		50 mA or less		5 to 50 mA	7 to 20 mA	50 mA or less	20 mA or less	5 to 50 mA	7 to 20 mA	7 to 10 mA
Indicator	LED (Lit when ON)	LED (Lit when ON)	Red/green LED (Lit when ON)	Red/green LED (Lit when ON)	LED (Lit when ON)	Yellow LED (Lit when ON)	Red/green LED (Lit when ON)	Red/green LED (Lit when ON)	LED (Lit when ON)		No indicator lamp		LED (Lit when ON)		
Leakage current	≤ 1 mA at 100 VAC, ≤ 2 mA at 200 VAC	1 mA or less			10 μA or less				0 mA						
Weight g	1 m:33 3 m:87 5 m:142	1 m:18 3 m:49 5 m:80	1 m:33 3 m:87 5 m:142	1 m:18 3 m:49 5 m:80	1 m:18 3 m:49 5 m:80		1 m:33 3 m:87 5 m:142	1 m:18 3 m:49 5 m:80	1 m:18 3 m:49 5 m:80				1 m:33 3 m:87 5 m:142		

*1: Refer to Ending Page 1 for detailed switch specifications and dimensions.
*2: Switches other than the above models, such as switches with connectors, are also available. Refer to Ending Page 1.
*3: The max. load current is 20 mA at 25°C. The current is lower than 20 mA if the operating ambient temperature around the switch is higher than 25˚C. (5 to 10 mA at 60°C)

Cylinder weight

(Unit: kg)

Item/mounting / Bore size (mm)	Product weight when stroke (S) = 0 mm								Switch weight (per 1 pc.)	Switch rail + band weight	Additional weight per S = 10 mm
	Basic (00)	Axial foot (LB)	Axial foot (LS)	Flange (FA/FB)	Eye bracket (CA)	Clevis (CC)	Clevis bracket (CB)	Trunnion (TA/TB)			
ø20	0.18	0.33	0.26	0.24	0.33	0.19	0.33	0.23	Refer to the weight in the switch specifications.	0.005	0.01
ø25	0.28	0.54	0.41	0.43	0.52	0.28	0.52	0.38		0.005	0.01
ø32	0.32	0.58	0.45	0.47	0.56	0.32	0.56	0.42		0.009	0.02
ø40	0.51	0.77	0.64	0.66	0.75	0.53	0.75	0.67		0.009	0.02

(Example) Product weight of CMK2-Z-FA-32-50-T0H-D

Product weight when S = 0 mm...0.47 kg
Additional weight when S = 50mm .....Additional weight when S = 10mm 0.02 x $\frac{\text{Product stroke (50)}}{10}$ = 0.10 kg
Weight of 2 switches .....0.036 kg
Weight of switch rail + 2 bands ...0.018 kg
Product weight.....0.47 kg + 0.1 kg + 0.036 kg + 0.018 kg = 0.624 kg

Theoretical thrust table

(Unit: N)

Bore size (mm)	Operating direction	Working pressure MPa										
		0.1	0.15	0.2	0.3	0.4	0.5	0.6	0.7	0.8	0.9	1.0
ø20	Push	31.4	47.1	62.8	94.2	1.26×10^2	1.57×10^2	1.88×10^2	2.20×10^2	2.51×10^2	2.83×10^2	3.14×10^2
	Pull	23.6	35.3	47.1	70.7	94.2	1.18×10^2	1.41×10^2	1.65×10^2	1.88×10^2	2.12×10^2	2.36×10^2
ø25	Push	49.1	73.6	98.2	1.47×10^2	1.96×10^2	2.45×10^2	2.95×10^2	3.44×10^2	3.93×10^2	4.42×10^2	4.91×10^2
	Pull	37.8	56.7	75.6	1.13×10^2	1.51×10^2	1.89×10^2	2.27×10^2	2.64×10^2	3.02×10^2	3.40×10^2	3.78×10^2
ø32	Push	80.4	1.21×10^2	1.61×10^2	2.41×10^2	3.22×10^2	4.02×10^2	4.83×10^2	5.63×10^2	6.43×10^2	7.24×10^2	8.04×10^2
	Pull	69.1	1.04×10^2	1.38×10^2	2.07×10^2	2.76×10^2	3.46×10^2	4.15×10^2	4.84×10^2	5.53×10^2	6.22×10^2	6.91×10^2
ø40	Push	1.26×10^2	1.88×10^2	2.51×10^2	3.77×10^2	5.03×10^2	6.28×10^2	7.54×10^2	8.80×10^2	1.01×10^3	1.13×10^3	1.26×10^3
	Pull	1.10×10^2	1.65×10^2	2.21×10^2	3.31×10^2	4.41×10^2	5.51×10^2	6.62×10^2	7.72×10^2	8.82×10^2	9.92×10^2	1.10×10^3

SCP*3
CMK2
CMA2
SCM
SCG
SCA2
SCS2
CKV2
CAV2/ COVP/N2
SSD2
SSG
SSD
CAT
MDC2
MVC
SMG
MSD/ MSDG
FC*
STK
SRL3
SRG3
SRM3
SRT3
MRL2
MRG2
SM-25
ShkAbs
FJ
FK
Spd Contr
Ending

How to order

No switch (built-in magnet for switch)

CMK2-Z - 00 - 20 ( ) - 100 ——— V Y

With switch (built-in magnet for switch)

CMK2-Z - 00 - 20 ( ) - 100 - T0H - R - V Y

Ⓐ Mounting *1

Ⓑ Bore size

Ⓒ Port thread

Ⓓ Stroke

Ⓔ Switch model No.

Ⓕ Switch quantity *8

Ⓖ Option *3, *4

Ⓗ Accessory *5

Code	Description
Ⓐ Mounting	
00	Basic
LB	Axial foot (Both sides)
LS	Axial foot (One side)
FA	Rod side flange
FB	Head side flange
CA	Eye bracket
CC	Eye bracket integrated
CC1	Eye bracket, bush pressfit
CB	Clevis bracket (pin and split washer pin included)
TA	Rod side trunnion
TB	Head side trunnion

Ⓑ Bore size (mm)		
20	ø20	*9
25	ø25	*9
32	ø32	
40	ø40	

Ⓒ Port thread	
Blank	Rc thread
NN	NPT thread (made-to-order product)
GN	G thread (made-to-order product)

Ⓓ Stroke (mm)

Bore size	Stroke *2	Bore size
ø20	**5 to 750**	**In 1 mm increments**
ø25	**5 to 750**	
ø32	**5 to 750**	
ø40	**5 to 750**	

Ⓔ Switch model No.

Axial lead wire	Radial lead wire	Contact	Voltage AC	Voltage DC	Indicator	Lead wire
T0H*	**T0V***	Reed	●	●	1-color LED	2-wire
T5H*	**T5V***		●	●	No indicator lamp	
T8H*	**T8V***		●	●	1-color LED	
T1H*	**T1V***	Proximity	●		1-color LED	2-wire
T2H*	**T2V***			●		
T3H*	**T3V***			●		3-wire
T3PH*	**T3PV***			●	1-color LED	
T2WH*	**T2WV***			●	2-color LED	2-wire
T2YH*	**T2YV***			●		
T3WH*	**T3WV***			●		3-wire
T3YH*	**T3YV***			●		
T2JH*	**T2JV***			●	1-color LED off-delay	2-wire

*** Lead wire length**	
Blank	1 m (standard)
3	3 m (option)
5	5 m (option)

Ⓕ Switch quantity	
R	1 on rod side
H	1 on head side
D	2
T	3

Ⓖ Option

		Max. ambient temp.	Instantaneous max. temp.
J	Bellows	100°C	200°C
L	Bellows	250°C	400°C
F	With push-in fitting (straight)		
FE	With push-in fitting (elbow)		
M	Piston rod material (stainless steel) *9		
V	Boss cutoff		
P6	Copper and PTFE free (made-to-order product)		

Ⓗ Accessory	
I	Rod eye
Y	Rod clevis (pin and split washer pin included)
B2	Clevis bracket (pin and snap ring included)

⚠ Precautions for model No. selection

*1 : One side foot (LS) has the max. stroke of 50 mm.
*2 : For the min. stroke with switch and the max. and min. strokes with bellows, refer to page 172.
*3 : The compatible tube O.D. of F (with push-in fitting (straight)) and FE (with push-in fitting (elbow)) is ø6.
*4 : The instantaneous max. temperature is the temperature when sparks, cutting chips, etc., instantaneously contact the bellows.
*5 : "I" and "Y" cannot be selected together.
*6 : Refer to Ending Page 85 for custom specifications of rod end form.
*7 : Refer to page 84 for combination of variations/ options.
*8 : Up to three switches can be installed. If four or more switches are required, switch mounting brackets for the extra switches must be prepared separately.
*9 : For 20 or 25 bore size, the rod is stainless steel as standard and the rod nut is zinc chromate. If a stainless steel rod nut is necessary, select the "M" option code.

[Example of model No.]

CMK2-Z-00-20-100-T0H-R-VY

Model: Medium bore size cylinder, double acting/built-in speed controller

Ⓐ Mounting : Basic
Ⓑ Bore size : ø20 mm
Ⓒ Port thread : Rc thread
Ⓓ Stroke : 100 mm
Ⓔ Switch model No. : Reed T0H switch, lead wire 1 m
Ⓕ Switch quantity : 1 on rod side
Ⓖ Option : Boss cutoff
Ⓗ Accessory : Rod clevis

How to order switch

● Switch body + mounting bracket set

CMK2 - T0H - 20

Bore size (Item Ⓑ on page 174)

Switch model No. (Item Ⓔ on page 174)

● Switch body only

SW - T0H

Switch model No. (Item Ⓔ on page 174)

● Mounting bracket set

CMK2 - T - 20

Bore size (Item Ⓑ on page 174)

Mounting bracket

How to order mounting bracket

Bore size (mm) / Mounting bracket	ø20	ø25	ø32	ø40
Basic (00) *3	M1-00-20	M1-00-30	M1-00-30	M1-00-30
Axial foot (LB/LS)	M1-LB-20	M1-LB-30	M1-LB-30	M1-LB-30
Flange (FA/FB)	M1-FA-20	M1-FA-30	M1-FA-30	M1-FA-30
Trunnion (TA/TB)	M1-TA-20	M1-TA-30	M1-TA-30	M1-TA-40
Eye bracket (CA)	M1-CA-20	M1-CA-30	M1-CA-30	M1-CA-30
Clevis bracket (CB)	M1-CB-20	M1-CB-30	M1-CB-30	M1-CB-30

*1: Regarding mounting brackets, mounting nuts and toothed washers are supplied with the axial foot and flange. The trunnion includes mounting nuts.
2: For axial foot (two-sided), 2 sets of “M1-LB-” in the table above are required.
*3: Mounting nut, toothed washer only. Although 1 set is included with the basic of the product (00), use this when needed.

Internal structure and parts list

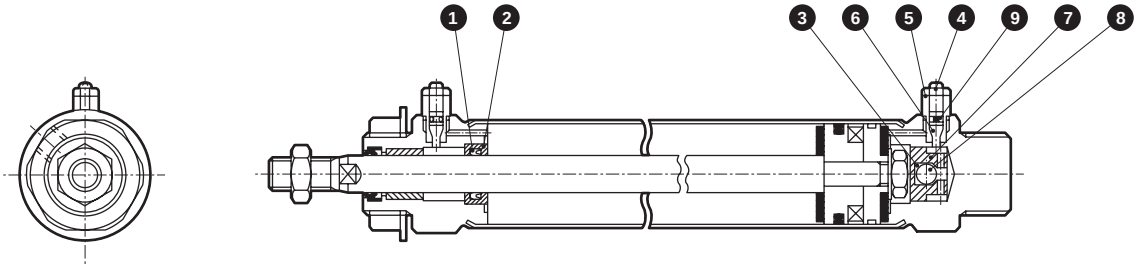

Cannot be disassembled

● Note: This product is caulked and cannot be disassembled.

No.	Part name	Material	Remarks
1	Check packing	Nitrile rubber	
2	Packing adaptor	Carbon steel	Chromate
3	Check ball holder	Steel	Zinc chromate
4	Hexagon nut	Steel	Zinc chromate
5	Needle holder	Steel	Zinc chromate
6	Needle	Steel	Zinc chromate
7	Check ball retainer	Carbon steel	Black finish
8	Urethane ball	Urethane rubber	
9	Needle gasket	Nitrile rubber	

Dimensions

● Basic (00)

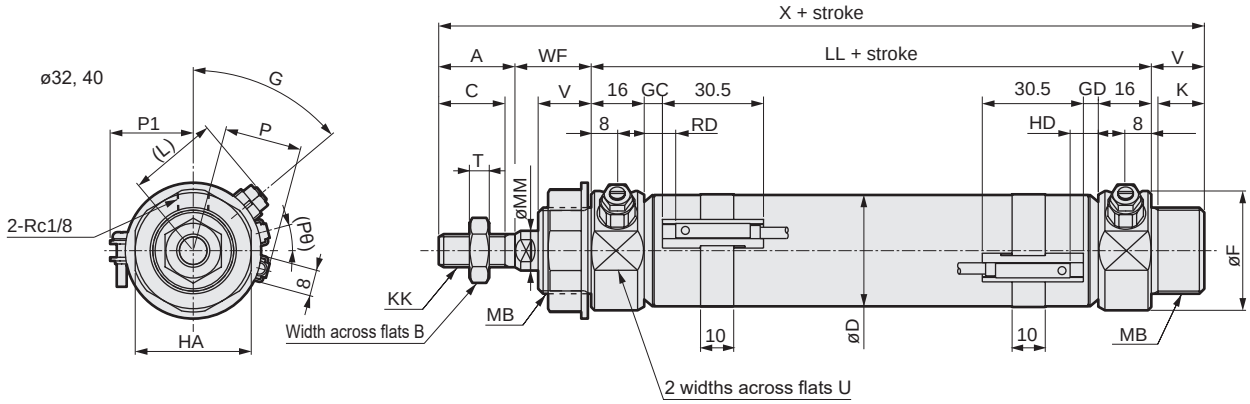

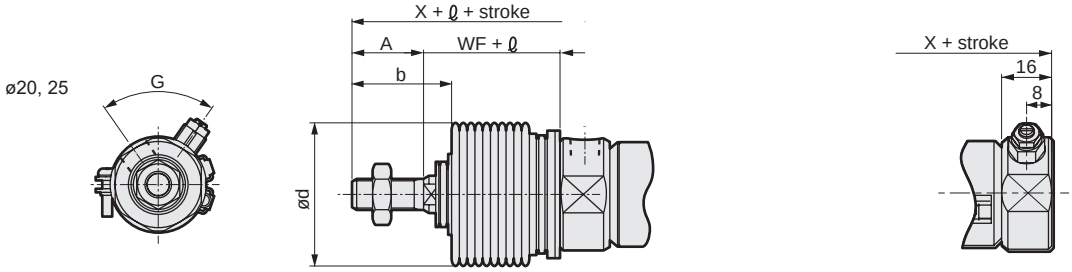

[With bellows] [Boss cutoff]

1 : Refer to page 198 for HD, RD and protruding dimensions of T1, T8* and 2-color LED switches.
*2 : For the ℓ dimension, round up below the decimal point.

RD: Rod side max. sensitivity position
HD: Head side max. sensitivity position

Code	Basic (00) Basic dimensions																	
Bore size (mm)	A	B	C	D	F	G	HA	K	KK	L	LL	MB	MM	T	U	V	WF	X
ø20	20	13	18	21.4	28	70°	26	12	M 8x1.0	23	66	M18x1.5	10	5	24	14	24	124
ø25	23	17	20	26.4	32	60°	35	14	M10x1.25	26	69	M26x1.5	12	6	30	16	23	131
ø32	23	17	20	33.6	36	50°	35	14	M10x1.25	27	69	M26x1.5	12	6	34	16	23	131
ø40	25	19	22	41.6	45	50°	35	14	M12x1.5	31	73	M26x1.5	14	7	43	16	23	137

Code	With switch											With bellows			Boss cutoff
	T0, T5, T2, T3				T2W, T3W				P	P1	(Pθ)°	b	d	ℓ	X
Bore size (mm)	GC	GD	RD	HD	GC	GD	RD	HD							
ø20	4	3	8	7	6	5	10	9	17.3	19.5	22	30	30	(Stroke/3) + 6	110
ø25	5.5	4.5	9.5	8.5	7.5	6.5	11.5	10.5	19.8	22.0	18	32	46	(Stroke/3.25) + 7	115
ø32	5.5	4.5	9.5	8.5	7.5	6.5	11.5	10.5	24.3	25.5	15	32	46	(Stroke/3.25) + 7	115
ø40	7.5	6.5	11.5	10.5	9.5	8.5	13.5	12.5	28.3	29.5	12	34	46	(Stroke/3.25) + 7	121

* Dimensions of other mountings are the same as those of the standard. Refer to pages 92 to 97.
* For the dimensions of the accessories, refer to page 98.

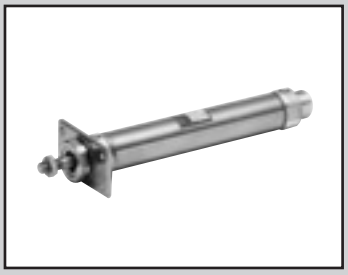

Medium bore size cylinder
double acting/low hydraulic

CMK2-H Series

● Bore size: ø20/ø25/ø32/ø40

JIS symbol ● Double acting cylinder single rod

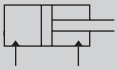

RoHS CAD

Specifications

Item		CMK2-H			
Bore size	mm	ø20	ø25	ø32	ø40
Actuation		Double acting/low hydraulic			
Working fluid		Hydraulic fluid			
Max. working pressure	MPa	1.0 (≈150 psi, 10 bar)			
Min. working pressure	MPa	0.15 (≈22 psi, 1.5 bar)			
Proof pressure	MPa	1.6 (≈230 psi, 16 bar)			
Ambient temperature	°C	5 (41°F) to 50 (122°F)			
Port size		Rc 1/8			
Stroke tolerance	mm	$^{+2.0}_{0}$(Up to 200), $^{+2.4}_{0}$(More than 200)			
Working piston speed	mm/s	5 to 300			
Cushion		Rubber cushion			
Lubrication		Not required			
Allowable absorbed energy	J	0.166	0.308	0.424	0.639

● The product weight, thrust and dimensions are the same as those of CMK2 (standard).

Stroke

Bore size (mm)	Standard stroke (mm)	Max. stroke (mm)		Min. stroke (mm)	
		Without bellows	With bellows	No bellows Bellows "L"	Bellows "J"
ø20	25/50/75/100/150/200/250/300	750	650	5	25
ø25					
ø32					
ø40					

*1: The custom stroke is available in 1 mm increments.
*2: One side foot (LS) has the max. stroke of 50 mm.
*3: Contact CKD when stroke shorter than 25 mm is required for "J" bellows.

Min. stroke with switch

(Unit: mm)

Switch quantity	1					2					3				
	Proximity			Reed		Proximity			Reed		Proximity			Reed	
Bore size (mm)	T2, T3	T2W, T3W	T1, T*Y*	T0, T5	T8	T2, T3	T2W, T3W	T1, T*Y*	T0, T5	T8	T2, T3	T2W, T3W	T1, T*Y*	T0, T5	T8
ø20	10					25	30	35	25	35	50	55	55	50	55
ø25	10					25	30	35	25	35	50	55	55	50	55
ø32	10					25	30	35	25	35	50	55	55	50	55
ø40	10					25	30	35	25	35	50	55	55	50	55

*1: Up to 3 switches can be mounted.

Switch specifications

● 1-color/2-color LED

Item	2-wire proximity	2-wire proximity			3-wire proximity				2-wire reed						
	T1H/T1V	T2H/T2V/ T2JH/T2JV	T2YH/ T2YV	T2WH/ T2WV	T3H/ T3V	T3PH/ T3PV	T3YH/ T3YV	T3WH/ T3WV	T0H/T0V	T5H/T5V		T8H/T8V			
Applications	For programming controller relay, compact solenoid valve	Dedicated for programmable controller			For programmable controller, relay				For programmable controller, relay	For programmable controller, relay (no lamp), serial		For programmable controller, relay			
Output method	-				NPN output	PNP output	NPN output	NPN output	-						
Pwr. supp. V.	-				10 to 28 VDC				-						
Load voltage	85 to 265 VAC	10 to 30 VDC		24 VDC ±10%	30 VDC or less				12/24 VDC	100/110 VAC	5/12/24 VDC	100/110 VAC	12/24 VDC	110 VAC	220 VAC
Load current	5 to 100 mA	5 to 20 mA (*3)			100 mA or less		50 mA or less		5 to 50 mA	7 to 20 mA	50 mA or less	20 mA or less	5 to 50 mA	7 to 20 mA	7 to 10 mA
Indicator	LED (Lit when ON)	LED (Lit when ON)	Red/green LED (Lit when ON)	Red/green LED (Lit when ON)	LED (Lit when ON)	Yellow LED (Lit when ON)	Red/green LED (Lit when ON)	Red/green LED (Lit when ON)	LED (Lit when ON)		No indicator lamp		LED (Lit when ON)		
Leakage current	≤ 1 mA at 100 VAC, ≤ 2 mA at 200 VAC	1 mA or less			10 μA or less				0 mA						
Weight g	1 m:33 3 m:87 5 m:142	1 m:18 3 m:49 5 m:80	1 m:33 3 m:87 5 m:142	1 m:18 3 m:49 5 m:80	1 m:18 3 m:49 5 m:80		1 m:33 3 m:87 5 m:142	1 m:18 3 m:49 5 m:80	1 m:18 3 m:49 5 m:80				1 m:33 3 m:87 5 m:142		

*1: Refer to Ending Page 1 for detailed switch specifications and dimensions.
*2: Switches other than the above models, such as switches with connectors, are also available. Refer to Ending Page 1.
*3: The max. load current is 20 mA at 25°C. The current is lower than 20 mA if the operating ambient temperature around the switch is higher than 25˚C. (5 to 10 mA at 60°C)

Cylinder weight

(Unit: kg)

Item/mounting / Bore size (mm)	Product weight when stroke (S) = 0 mm								Switch weight (per 1 pc.)	Switch rail + band weight	Additional weight per S = 10 mm
	Basic (00)	Axial foot (LB)	Axial foot (LS)	Flange (FA/FB)	Eye bracket (CA)	Clevis (CC)	Clevis bracket (CB)	Trunnion (TA/TB)			
ø20	0.17	0.32	0.25	0.23	0.32	0.18	0.32	0.22	Refer to the weight in the switch specifications.	0.005	0.01
ø25	0.26	0.52	0.39	0.41	0.50	0.26	0.50	0.36		0.005	0.01
ø32	0.30	0.56	0.43	0.45	0.54	0.30	0.54	0.40		0.009	0.02
ø40	0.48	0.74	0.61	0.63	0.72	0.50	0.72	0.64		0.009	0.02

(Example) Product weight of CMK2-H-FA-32-50-T0H-D

Product weight when S = 0 mm....0.45 kg
Additional weight when S = 50mm ....Additional weight when S = 10 mm $0.02 \times \frac{\text{Product stroke (50)}}{10} = 0.10$ kg
Weight of 2 switches .....0.036 kg
Weight of switch rail + 2 bands ....0.018 kg
Product weight .....0.45 kg+0.1 kg+0.036 kg+0.018 kg=0.604 kg

Theoretical thrust table

(Unit: N)

Bore size (mm)	Operating direction	Working pressure MPa									
		0.15	0.2	0.3	0.4	0.5	0.6	0.7	0.8	0.9	1.0
ø20	Push	47.1	62.8	94.2	1.26×10^2	1.57×10^2	1.88×10^2	2.20×10^2	2.51×10^2	2.83×10^2	3.14×10^2
	Pull	35.3	47.1	70.7	94.2	1.18×10^2	1.41×10^2	1.65×10^2	1.88×10^2	2.12×10^2	2.36×10^2
ø25	Push	73.6	98.2	1.47×10^2	1.96×10^2	2.45×10^2	2.95×10^2	3.44×10^2	3.93×10^2	4.42×10^2	4.91×10^2
	Pull	56.7	75.6	1.13×10^2	1.51×10^2	1.89×10^2	2.27×10^2	2.64×10^2	3.02×10^2	3.40×10^2	3.78×10^2
ø32	Push	1.21×10^2	1.61×10^2	2.41×10^2	3.22×10^2	4.02×10^2	4.83×10^2	5.63×10^2	6.43×10^2	7.24×10^2	8.04×10^2
	Pull	1.04×10^2	1.38×10^2	2.07×10^2	2.76×10^2	3.46×10^2	4.15×10^2	4.84×10^2	5.53×10^2	6.22×10^2	6.91×10^2
ø40	Push	1.88×10^2	2.51×10^2	3.77×10^2	5.03×10^2	6.28×10^2	7.54×10^2	8.80×10^2	1.01×10^3	1.13×10^3	1.26×10^3
	Pull	1.65×10^2	2.21×10^2	3.31×10^2	4.41×10^2	5.51×10^2	6.62×10^2	7.72×10^2	8.82×10^2	9.92×10^2	1.10×10^3

SCP*3
CMK2
CMA2
SCM
SCG
SCA2
SCS2
CKV2
CAV2/COVP/N2
SSD2
SSG
SSD
CAT
MDC2
MVC
SMG
MSD/MSDG
FC*
STK
SRL3
SRG3
SRM3
SRT3
MRL2
MRG2
SM-25
ShkAbs
FJ
FK
Spd Contr
Ending

How to order

No switch (built-in magnet for switch)

CMK2-H - 00 - 20 ( ) - 100 ——— V I

With switch (built-in magnet for switch)

CMK2-H - 00 - 20 ( ) - 100 - T0H - R - V I

Ⓐ Mounting *1

Ⓑ Bore size

Ⓒ Port thread

Ⓓ Stroke

Ⓔ Switch model No.

Ⓕ Switch quantity *7

Ⓖ Option *3

Ⓗ Accessory *4

Code	Description
Ⓐ Mounting	
00	Basic
LB	Axial foot (Both sides)
LS	Axial foot (One side)
FA	Rod side flange
FB	Head side flange
CA	Eye bracket
CC	Eye bracket integrated
CC1	Eye bracket, bush pressfit
CB	Clevis bracket (pin and split washer pin included)
TA	Rod side trunnion
TB	Head side trunnion

Ⓑ Bore size (mm)

20	ø20	*8
25	ø25	*8
32	ø32	
40	ø40	

Ⓒ Port thread

Blank	Rc thread
NN	NPT thread (made-to-order product)
GN	G thread (made-to-order product)

Ⓓ Stroke (mm)

Bore size	Stroke *2	Custom stroke
ø20	**5 to 750**	**In 1 mm increments**
ø25	**5 to 750**	
ø32	**5 to 750**	
ø40	**5 to 750**	

Ⓔ Switch model No.

Axial lead wire	Radial lead wire	Contact	Voltage AC	Voltage DC	Indicator	Lead wire
T0H*	**T0V***	Reed	●	●	1-color LED	2-wire
T5H*	**T5V***	Reed	●	●	No indicator lamp	2-wire
T8H*	**T8V***	Reed	●	●	1-color LED	2-wire
T1H*	**T1V***	Proximity	●		1-color LED	2-wire
T2H*	**T2V***	Proximity		●	1-color LED	2-wire
T3H*	**T3V***	Proximity		●	1-color LED	3-wire
T3PH*	**T3PV***	Proximity		●	1-color LED	3-wire
T2WH*	**T2WV***	Proximity		●	2-color LED	2-wire
T2YH*	**T2YV***	Proximity		●	2-color LED	2-wire
T3WH*	**T3WV***	Proximity		●	2-color LED	3-wire
T3YH*	**T3YV***	Proximity		●	2-color LED	3-wire
T2JH*	**T2JV***	Proximity		●	1-color LED off-delay	2-wire

*** Lead wire length**

Blank	1 m (standard)
3	3 m (option)
5	5 m (option)

Ⓕ Switch quantity

R	1 on rod side
H	1 on head side
D	2
T	3

Ⓖ Option

		Max. ambient temp.	Instantaneous max. temp.
J	Bellows	100°C	200°C
L	Bellows	250°C	400°C
M	Piston rod material (stainless steel)		*8
V	Boss cutoff		
P6	Copper and PTFE free		

Ⓗ Accessory

I	Rod eye
Y	Rod clevis (pin and split washer pin included)
B2	Clevis bracket (pin and snap ring included)

⚠ Precautions for model No. selection

*1 : One side foot (LS) has the max. stroke of 50 mm.
*2 : For the min. stroke with switch and the max. and min. strokes with bellows, refer to page 178.
*3 : The instantaneous max. temperature is the temperature when sparks and cutting chips, etc., instantaneously contact the bellows.
*4 : "I" and "Y" cannot be selected together.
*5 : Refer to Ending Page 85 for custom specifications of rod end form.
*6 : Refer to page 84 for combination of variations/options.
*7 : Up to three switches can be installed. If four or more switches are required, switch mounting brackets for the extra switches must be prepared separately.
*8 : For 20 or 25 bore size, the rod is stainless steel as standard and the rod nut is zinc chromate. If a stainless steel rod nut is necessary, select the "M" option code.

[Example of model No.]

CMK2-H-00-20-100-T0H-R-VI

Model: Medium bore size cylinder, double acting/low hydraulic

Ⓐ Mounting	: Basic
Ⓑ Bore size	: ø20 mm
Ⓒ Port thread	: Rc thread
Ⓓ Stroke	: 100 mm
Ⓔ Switch model No.	: Reed T0H switch, lead wire 1 m
Ⓕ Switch quantity	: 1 on rod side
Ⓖ Option	: Boss cutoff
Ⓗ Accessory	: Rod eye

How to order switch

● Switch body + mounting bracket set

CMK2 - T0H - 20

Bore size (Item Ⓑ on page 180)

Switch model No. (Item Ⓔ on page 180)

● Switch body only

SW - T0H

Switch model No. (Item Ⓔ on page 180)

● Mounting bracket set

CMK2 - T - 20

Bore size (Item Ⓔ on page 180)

Mounting bracket

How to order mounting bracket

Bore size (mm) / Mounting bracket	ø20	ø25	ø32	ø40
Basic (00) *3	M1-00-20	M1-00-30	M1-00-30	M1-00-30
Axial foot (LB/LS)	M1-LB-20	M1-LB-30	M1-LB-30	M1-LB-30
Flange (FA/FB)	M1-FA-20	M1-FA-30	M1-FA-30	M1-FA-30
Trunnion (TA/TB)	M1-TA-20	M1-TA-30	M1-TA-30	M1-TA-40
Eye bracket (CA)	M1-CA-20	M1-CA-30	M1-CA-30	M1-CA-30
Clevis bracket (CB)	M1-CB-20	M1-CB-30	M1-CB-30	M1-CB-30

*1: Regarding mounting brackets, mounting nuts and toothed washers are supplied with the axial foot and flange. The trunnion includes mounting nuts.
2: For axial foot (two-sided), 2 sets of “M1-LB-” in the table above are required.
*3: Mounting nut, toothed washer only. Although 1 set is included with the basic of the product (00), use this when needed.

Internal structure

Same as standard. Refer to page 90.

Dimensions

Same as standard. Refer to pages 91 to 97.

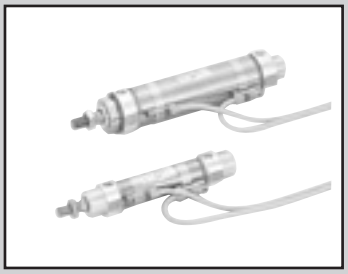

Medium bore size cylinder, double acting/coolant proof

CMK2-G2/G3 Series

● Bore size: ø20/ø25/ø32/ø40

JIS symbol

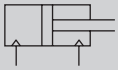

Specifications

Item	CMK2-G2/G3			
Bore size mm	ø 20	ø 25	ø 32	ø 40
Actuation	Double acting/coolant proof			
Working fluid	Compressed air			
Max. working pressure MPa	1.0 (≈150 psi, 10 bar)			
Min. working pressure MPa	0.15 (≈22 psi, 1.5 bar)			
Proof pressure MPa	1.6 (≈230 psi, 16 bar)			
Ambient temperature °C	-10 (14°F) to 60 (140°F) (no freezing)			
Port size	Rc1/8			
Stroke tolerance mm	$^{+2.0}_{0}$ (0 to 200) $^{+2.4}_{0}$ (More than 200)			
Working piston speed mm/s	50 to 500			
Cushion	Rubber cushion			
Lubrication	Not required (use turbine oil class 1 ISO VG32 if necessary for lubrication)			
Allowable absorbed energy J	0.166	0.308	0.424	0.639

Stroke

Bore size (mm)	Standard stroke (mm)	Max. stroke (mm)		Min. stroke (mm)		Min. stroke with switch (mm)
		Without bellows	With bellows	Without bellows	With bellows	
ø 20,ø 25, ø 32,ø 40	25, 50, 75, 100, 150, 200, 250, 300	750	Not supported	5	Not supported	25

*1: The custom stroke is available in 1 mm increments.
*2: One side type (LS) has the max. stroke of 50 mm.

Switch specifications

Type/model No.	Proximity switch specifications	
Item	T2YLH/T2YLV	T3YLH/T3YLV
Applications	Dedicated for programmable controller	Programmable controller, relay
Output method	-	NPN output
Power supply voltage	-	10 to 28 VDC
Load voltage/current	10 to 30 VDC, 5 to 20 mA *3	30 VDC or less, 50 mA or less
Indicator	Red/green LED (Lit when ON)	
Leakage current	1mA or less	10 μA or less
Shock resistance	980 m / S^2	
Weight g	1 m:33 3 m:87 5 m:142	

*1: Refer to Ending Page 1 for detailed switch specifications and dimensions.
*2: Switches with connectors are also available. Refer to Ending Page 1.
*3: The max. load current is 20 mA at 25°C. The current is lower than 20 mA if the operating ambient temperature around the switch is higher than 25˚C. (5 to 10 mA at 60°C)

Cylinder weight

(Unit: kg)

Item/mounting / Bore size (mm)	Product weight when stroke (S) = 0 mm								Switch weight (per 1 pc.)	Switch rail + band weight	Additional weight per S = 10 mm
	Basic (00)	Axial foot (LB)	Axial foot (LS)	Flange (FA/FB)	Eye bracket (CA)	Clevis (CC)	Clevis bracket (CB)	Trunnion (TA/TB)			
ø20	0.21	0.36	0.29	0.27	0.36	0.22	0.36	0.26	Refer to the weight in the switch specifications.	0.005	0.01
ø25	0.27	0.53	0.40	0.42	0.51	0.27	0.51	0.37		0.005	0.01
ø32	0.31	0.57	0.44	0.46	0.55	0.31	0.55	0.41		0.009	0.02
ø40	0.49	0.75	0.62	0.64	0.73	0.51	0.73	0.65		0.009	0.02

(Example) Product weight of CMK2-G2-FA-32-50-T2YL-D

Product weight when S = 0 mm ... 0.45 kg
Additional weight when S = 50mm ..... Additional weight when S = 10 mm $0.02 \times \frac{\text{Product stroke (50)}}{10} = 0.10$ kg
Weight of 2 switches ..... 0.062 kg
Weight of switch rail + 2 bands .... 0.018 kg
Product weight ..... 0.45 kg+0.1 kg+0.062 kg+0.018 kg=0.63 kgn

Theoretical thrust table

(Unit: N)

Bore size (mm)	Operating direction	Working pressure MPa									
		0.15	0.2	0.3	0.4	0.5	0.6	0.7	0.8	0.9	1.0
ø20	Push	47.1	62.8	94.2	1.26×10^2	1.57×10^2	1.88×10^2	2.20×10^2	2.51×10^2	2.83×10^2	3.14×10^2
	Pull	35.3	47.1	70.7	94.2	1.18×10^2	1.41×10^2	1.65×10^2	1.88×10^2	2.12×10^2	2.36×10^2
ø25	Push	73.6	98.2	1.47×10^2	1.96×10^2	2.45×10^2	2.95×10^2	3.44×10^2	3.93×10^2	4.42×10^2	4.91×10^2
	Pull	56.7	75.6	1.13×10^2	1.51×10^2	1.89×10^2	2.27×10^2	2.64×10^2	3.02×10^2	3.40×10^2	3.78×10^2
ø32	Push	1.21×10^2	1.61×10^2	2.41×10^2	3.22×10^2	4.02×10^2	4.83×10^2	5.63×10^2	6.43×10^2	7.24×10^2	8.04×10^2
	Pull	1.04×10^2	1.38×10^2	2.07×10^2	2.76×10^2	3.46×10^2	4.15×10^2	4.84×10^2	5.53×10^2	6.22×10^2	6.91×10^2
ø40	Push	1.88×10^2	2.51×10^2	3.77×10^2	5.03×10^2	6.28×10^2	7.54×10^2	8.80×10^2	1.01×10^3	1.13×10^3	1.26×10^3
	Pull	1.65×10^2	2.21×10^2	3.31×10^2	4.41×10^2	5.51×10^2	6.62×10^2	7.72×10^2	8.82×10^2	9.92×10^2	1.10×10^3

How to order

No switch (built-in magnet for switch)

CMK2 - G2 - 00 - 20 ( ) - 100 ———— Y

With switch (built-in magnet for switch)

CMK2 - G2 - 00 - 20 ( ) - 100 - T2YLH - R - Y

Ⓐ Degree of protection level

Ⓑ Mounting *1

Ⓒ Bore size

Ⓓ Port thread

Ⓔ Stroke

Ⓕ Switch model No.
* indicates the lead wire length.

Ⓖ Switch quantity *5

Ⓗ Accessory *3

Code	Description
Ⓐ Degree of protection level	
G2	Coolant proof scraper + packing NBR
G3	Coolant proof scraper + packing FKM
Ⓑ Mounting	
00	Basic
LB	Axial foot (Both sides)
LS	Axial foot (One side)
FA	Rod side flange
FB	Head side flange
CA	Eye bracket
CC	Eye bracket integrated
CC1	Eye bracket bush pressfit
CB	Clevis bracket (pin and split washer pin included)
TA	Rod side trunnion
TB	Head side trunnion
Ⓒ Bore size (mm)	
20	ø20
25	ø25
32	ø32
40	ø40
Ⓓ Port thread	
Blank	Rc thread
NN	NPT thread (made-to-order product)
GN	G thread (made-to-order product)

Ⓔ Stroke (mm)

Bore size	Stroke *2	Custom stroke
ø20	**5 to 750**	**In 1 mm increments**
ø25	**5 to 750**	
ø32	**5 to 750**	
ø40	**5 to 750**	

Ⓕ Switch model No.

Axial lead wire	Radial lead wire	Contact	Voltage	Indicator	Lead wire
T2YLH*	**T2YLV***	Proximity	DC	2-color	2-wire
T3YLH*	**T3YLV***			LED	3-wire

*** Lead wire length**	
Blank	1 m (standard)
3	3 m (option)
5	5 m (option)

Ⓖ Switch quantity	
R	1 on rod side
H	1 on head side
D	2
T	3

Ⓗ Accessory	
I	Rod eye
Y	Rod clevis (pin and split washer pin included)
B2	Clevis bracket (pin and snap ring included)

⚠ Precautions for model No. selection

*1 : One side foot (LS) has the max. stroke of 50 mm.
*2 : Refer to page 182 for the min. stroke with switch.
*3 : "I" and "Y" cannot be selected together.
*4 : Refer to page 84 for combinations of variations/options.
*5 : Up to three switches can be installed. If four or more switches are required, switch mounting brackets for the extra switches must be prepared separately.

[Example of model No.]

CMK2-G2-FA-32-100-T2YLH-R-Y

Model: Medium bore size cylinder

Ⓐ Degree of protection level : Coolant proof scraper + packing NBR
Ⓑ Mounting : Rod side flange
Ⓒ Bore size : ø32 mm
Ⓓ Port thread : Rc thread
Ⓔ Stroke : 100 mm
Ⓕ Switch model No. : Proximity switch T2YLH, lead wire 1 m
Ⓖ Switch quantity : 1 on rod side
Ⓗ Accessory : Rod clevis

How to order switch

● Switch body + mounting bracket set

CMK2 - T2YLH - 20

- 20 → Bore size (Item Ⓒ on page 184)
- T2YLH → Switch model No. (Item Ⓕ on page 184)

● Mounting bracket set

CMK2 - T - 20

- 20 → Bore size (Item Ⓒ on page 184)
- T → Mounting bracket

● Switch body only

SW - T2YLH

- T2YLH → Switch model No. (Item Ⓕ on page 184)

How to order mounting bracket

Bore size (mm) / Mounting bracket	ø20	ø25	ø32	ø40
Basic (00) *4	M1-00-20	M1-00-30	M1-00-30	M1-00-30
Axial foot (LB/LS)	M1-LB-20	M1-LB-30	M1-LB-30	M1-LB-30 CMK2-G2-40-LS (LB rod side)
Flange (FA/FB)	M1-FA-20	M1-FA-30	M1-FA-30	CMK2-G2-40-FA(FA) M1-FA-30(FB)
Trunnion (TA/TB)	M1-TA-20	M1-TA-30	M1-TA-30	CMK2-G2-40-TA(TA) M1-TA-40(TB)
Eye bracket (CA)	M1-CA-20	M1-CA-30	M1-CA-30	M1-CA-30
Clevis bracket (CB)	M1-CB-20	M1-CB-30	M1-CB-30	M1-CB-30

*1: The rod cover nut, LS bracket (LB rod side), FA bracket and TA bracket for ø40 bore size are not the standard.
*2: Regarding mounting brackets, mounting nuts and toothed washers are supplied with the axial foot and flange. The trunnion includes mounting nuts.
3: For axial foot (two-sided), 2 sets of "M1-LB-" in the table above are required.
*4: Mounting nut, toothed washer only. Although 1 set is included with the basic of the product (00), use this when needed.

SCP*3
CMK2
CMA2
SCM
SCG
SCA2
SCS2
CKV2
CAV2/COVP/N2
SSD2
SSG
SSD
CAT
MDC2
MVC
SMG
MSD/MSDG
FC*
STK
SRL3
SRG3
SRM3
SRT3
MRL2
MRG2
SM-25
ShkAbs
FJ
FK
Spd Contr
Ending

Internal structure and parts list

● Degree of protection: Packing NBR

CMK2-G2

● Degree of protection: Packing FKM

CMK2-G3

ø20

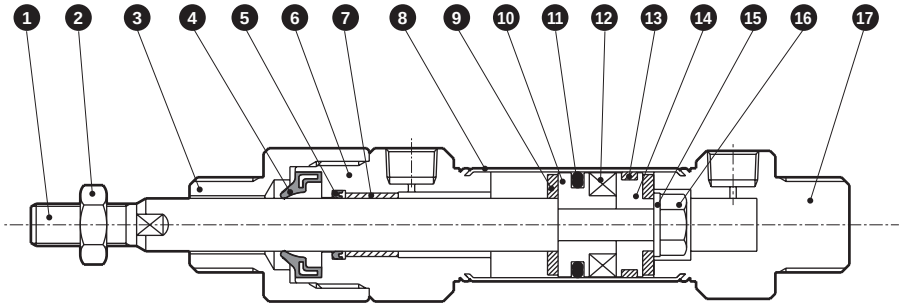

ø25/ø32/ø40

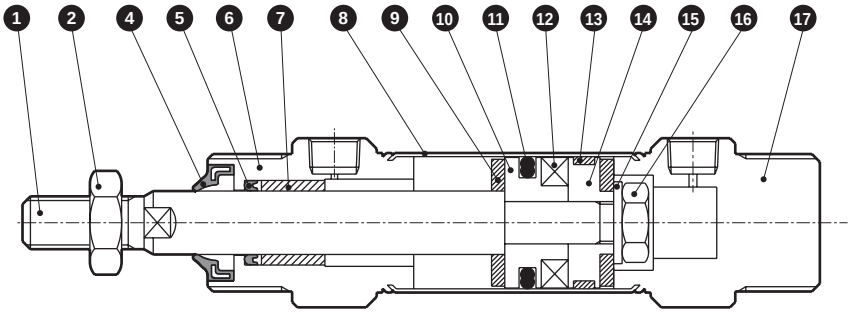

Cannot be disassembled

Note: This product is caulked and cannot be disassembled.

No.	Part name		Material	Remarks	No.	Part name		Material	Remarks
1	Piston rod		Stainless steel	Industrial chrome plating	9	Cushion rubber		Urethane rubber	
2	Hexagon nut		Stainless steel		10	Piston A		Aluminum alloy	Chromate treatment
3	Adaptor		Aluminum alloy	Chromate treatment	11	Piston packing	G2	Nitrile rubber	
4	Scraper	G2	Nitrile rubber				G3	Fluoro rubber	
		G3	Fluoro rubber		12	Magnet		Plastic	
5	Rod packing	G2	Nitrile rubber		13	Wear ring		Polyacetal	
		G3	Fluoro rubber		14	Piston B		Aluminum alloy	Chromate treatment
6	Rod cover		Aluminum alloy	Chromate treatment	15	Spacer		Steel	Zinc chromate treatment
7	Bush		ø20: DU dry bearing ø25, ø32, ø40: Copper-based		16	Hexagon nut		Steel	Zinc chromate treatment
					17	Head cover		Aluminum alloy	Chromate treatment
8	Cylinder tube		Stainless steel						

Dimensions

● Basic (00) ø20

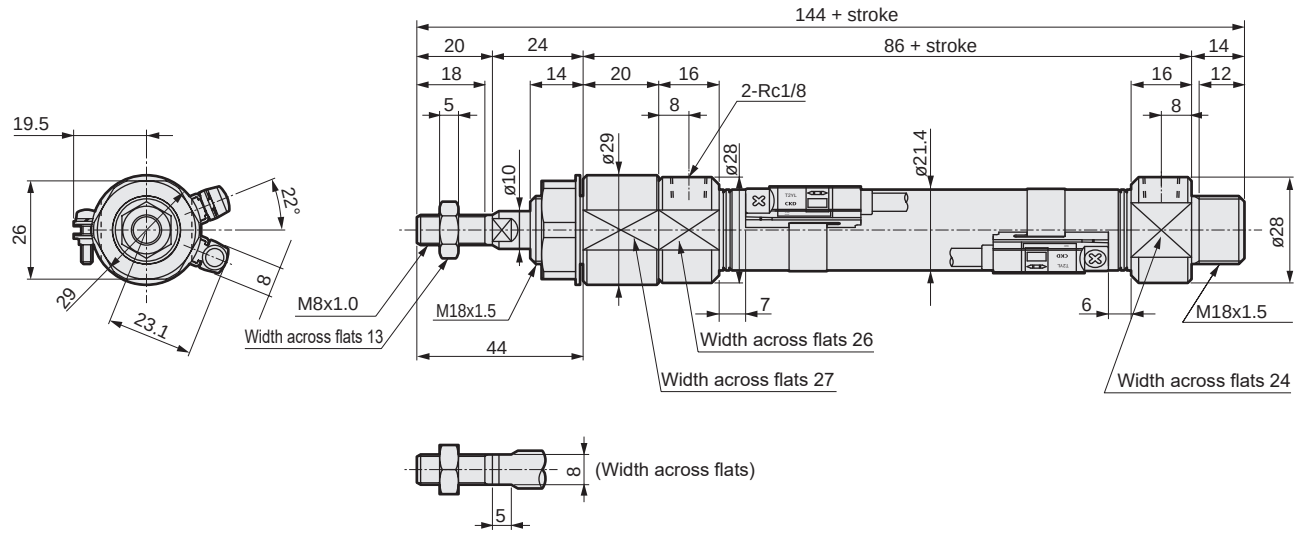

* Position unspecified for adapter width across flats.

● Basic (00) ø25/ø32/ø40

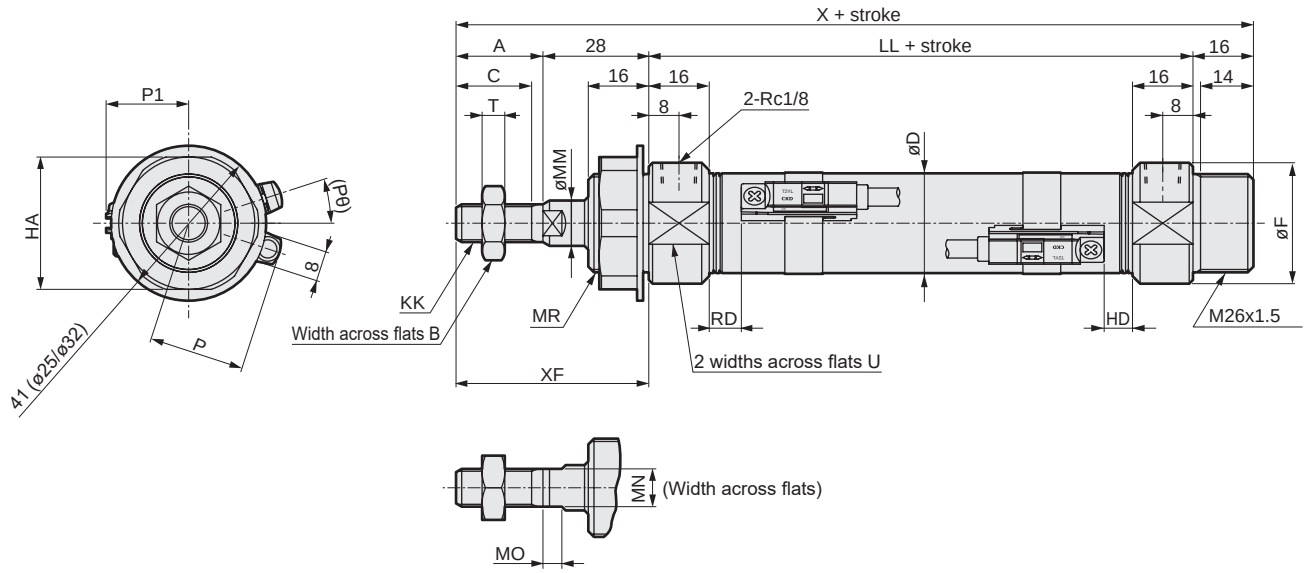

*1: Toothed washer is not supplied with ø40.

Code	Basic (00) Basic dimensions															
Bore size (mm)	A	B	C	D	F	HA	KK	LL	MM	MN	MO	MR	T	U	X	XF
ø25	23	17	20	26.4	32	35	M10x1.25	69	12	10	5	M26x1.5	6	30	136	51
ø32	23	17	20	33.6	36	35	M10x1.25	69	12	10	5	M26x1.5	6	34	136	51
ø40	25	19	22	41.6	45	38	M12x1.5	73	14	12	6	M30x1.5	7	43	142	53

Code	With switch				
Bore size (mm)	RD	HD	P	(Pθ)°	P1
ø25	8.5	7.5	25.6	18	22.0
ø32	8.5	7.5	30.1	15	25.5
ø40	10.5	9.5	34.1	12	29.5

* For the dimensions of the accessories, refer to page 98.

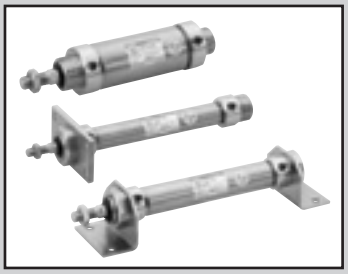

Small bore size cylinder double acting/exterior 100% stainless steel/water resistant

CMK2-JG2/JG3 Series

● Bore size: ø20/ø25/ø32/ø40

JIS symbol

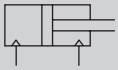

RoHS

Specifications

1 MPa ≈ 145.0 psi, 1 MPa = 10 bar

Item	CMK2-JG2/JG3			
Bore size mm	ø20	ø25	ø32	ø40
Actuation	Double acting/water resistant			
Working fluid	Compressed air			
Max. working pressure MPa	1.0 (≈145 psi, 10 bar)			
Min. working pressure MPa	0.15 (≈22 psi, 2 bar)			
Proof pressure MPa	1.6 (≈232 psi, 16 bar)			
Ambient temperature °C	-10 (14°F) to 60 (140°F) (no freezing)			
Port size	Rc 1/8			
Stroke tolerance mm	$^{+2.0}_{0}$ (0 to 200) $^{+2.4}_{0}$ (More than 200)			
Working piston speed mm/s	50 to 500			
Cushion	Rubber cushion			
Lubrication	Not required (use turbine oil class 1 ISO VG32 if necessary for lubrication)			
Allowable absorbed energy J	0.166	0.308	0.424	0.639

Stroke

Bore size (mm)	Standard stroke (mm)	Max. stroke (mm)	Min. stroke (mm)	Min. stroke with switch (mm)
ø20, ø25, ø32, ø40	25, 50, 75, 100, 150, 200, 250, 300	750	5	25

*1: The custom stroke is available in 1 mm increments.
*2: One side foot (LS) has maximum stroke of 50 mm.

Switch specifications

Type/model No.	Proximity switch specifications	
Item	T2YLH/T2YLV	T3YLH/T3YLV
Applications	Dedicated for programmable controller	Programmable controller, relay
Output method	–	NPN output
Power supply voltage	–	10 to 28 VDC
Load voltage/current	10 to 30 VDC, 5 to 20 mA *2	30 VDC or less, 50 mA or less
Indicator	Red/green LED (Lit when ON)	
Leakage current	1 mA or less	10 μA or less
Impact resistance	980 m/S^2	
Weight g	1 m: 33 3 m: 87 5 m: 142	

*1: Refer to Ending Page 1 for detailed switch specifications and dimensions.
*2: Switches with connectors are also available. Refer to Ending Page 1.
*3 : Max. load current: 20 mA at 25˚C. The current is lower than 20 mA if the operating ambient temperature around the switch is higher than 25˚C. (5 to 10 mA at 60°C)

Cylinder weight

(Unit: kg)

Item/mounting / Bore size (mm)	Product weight when stroke (S) = 0 mm					Switch weight (per 1 pc)	Switch rail + Band weight	Additional weight per S = 10 mm
	Basic (00)	Axial foot (LB)	Axial foot (LS)	Flange (FA, FB)	Eye bracket (CC)			
ø20	0.31	0.57	0.44	0.46	0.37	Refer to the weight in the switch specifications.	0.005	0.01
ø25	0.32	0.58	0.45	0.47	0.39		0.005	0.01
ø32	0.43	0.69	0.56	0.58	0.55		0.009	0.02
ø40	0.65	0.91	0.78	0.80	0.90		0.009	0.02

(Example) Product weight of CMK2-JG2-FA-32-50-T2YL-D

Product weight when S = 0 mm … 0.56 kg
Additional weight when S = 50 mm … Additional weight when S = 10 mm 0.02 x $\frac{\text{Product stroke (50)}}{10}$ = 0.10 kg
Weight of 2 switches …… 0.062 kg
Weight of switch rail + 2 bands … 0.018 kg
Product weight …… 0.56 kg + 0.1 kg + 0.062 kg + 0.018 kg = 0.74 kg

Theoretical thrust table

(Unit: N)

Bore size (mm)	Operating direction	Working pressure MPa									
		0.15	0.2	0.3	0.4	0.5	0.6	0.7	0.8	0.9	1.0
ø20	Push	47.1	62.8	94.2	1.26×10^2	1.57×10^2	1.88×10^2	2.20×10^2	2.51×10^2	2.83×10^2	3.14×10^2
	Pull	35.3	47.1	70.7	94.2	1.18×10^2	1.41×10^2	1.65×10^2	1.88×10^2	2.12×10^2	2.36×10^2
ø25	Push	73.6	98.2	1.47×10^2	1.96×10^2	2.45×10^2	2.95×10^2	3.44×10^2	3.93×10^2	4.42×10^2	4.91×10^2
	Pull	56.7	75.6	1.13×10^2	1.51×10^2	1.89×10^2	2.27×10^2	2.64×10^2	3.02×10^2	3.40×10^2	3.78×10^2
ø32	Push	1.21×10^2	1.61×10^2	2.41×10^2	3.22×10^2	4.02×10^2	4.83×10^2	5.63×10^2	6.43×10^2	7.24×10^2	8.04×10^2
	Pull	1.04×10^2	1.38×10^2	2.07×10^2	2.76×10^2	3.46×10^2	4.15×10^2	4.84×10^2	5.53×10^2	6.22×10^2	6.91×10^2
ø40	Push	1.88×10^2	2.51×10^2	3.77×10^2	5.03×10^2	6.28×10^2	7.54×10^2	8.80×10^2	1.01×10^3	1.13×10^3	1.26×10^3
	Pull	1.65×10^2	2.21×10^2	3.31×10^2	4.41×10^2	5.51×10^2	6.62×10^2	7.72×10^2	8.82×10^2	9.92×10^2	1.10×10^3

How to order

No switch

CMK2 - JG2 - 00 - 20 - 50 ———— ○

With switch

CMK2 - JG2 - 00 - 20 - 50 - T2YL - R - FP1 Y

Ⓐ Variation

Ⓑ Mounting *1

Ⓒ Bore size

Ⓓ Stroke

Ⓔ Switch model No.
* indicates the lead wire length.

Ⓕ Switch quantity *3

Ⓖ Option

Ⓗ Accessory *4

Code	Description
Ⓐ Variation	
JG2	Exterior 100% stainless steel + water resistant scraper + packing NBR
JG3	Exterior 100% stainless steel + water resistant scraper + packing FKM
Ⓑ Mounting	
00	Basic
LB	Axial foot (Both sides)
LS	Axial foot (One side)
FA	Rod side flange
FB	Head side flange
CC	Eye bracket integrated
Ⓒ Bore size (mm)	
20	ø20
25	ø25
32	ø32
40	ø40

Ⓓ Stroke (mm)

Bore size	Stroke *2	Custom stroke
ø20	5 to 750	In 1 mm increments
ø25	5 to 750	
ø32	5 to 750	
ø40	5 to 750	

Ⓔ Switch model No.

Lead wire Straight	Lead wire Radial	Contact	Voltage	Indicator	Lead wire
T2YLH*	T2YLV*	Proximity	DC	2-color	2-wire
T3YLH*	T3YLV*			LED	3-wire

* Lead wire length	
Blank	1 m (standard)
3	3 m (option)
5	5 m (option)

Ⓕ Switch quantity	
R	1 on rod side
H	1 on head side
D	2
T	3

Ⓖ Option	
Blank	Standard
FP1	Food-grade (NSF H1) grease
V	Boss cutoff

Ⓗ Accessory	
I	Rod eye
Y	Rod clevis (pin and snap ring included)

⚠ Precautions for model No. selection

*1: One side foot (LS) has maximum stroke of 50 mm.
*2: Refer to page 1 for min. stroke with switch.
*3: Up to three switches can be installed. If four or more switches are required, switch mounting brackets for the extra switches must be prepared separately.
*4: "I" and "Y" cannot be selected together.

[Example of model No.]

CMK2-JG2-CC-32-50-T2YLH-D-FP1Y

Model: Small bore size cylinder

Ⓐ Variation : Exterior 100% stainless steel + water resistant scraper + packing NBR
Ⓑ Mounting format : Eye bracket integrated
Ⓒ Bore size : ø32
Ⓓ Stroke : 50 mm
Ⓔ Switch model No. : Proximity switch T2YLH, lead wire 1 m
Ⓕ Switch quantity : 2 pcs. included
Ⓖ Option : Food grade grease specification
Ⓗ Accessory : Rod clevis

How to order switch

● Switch body + mounting bracket set

CMK2 - T2YLH - 20

- 20 → Bore size (Item Ⓒ on the previous page)
- T2YLH → Switch model No. (Item Ⓔ on the previous page)

● Mounting bracket set

CMK2 - T - 20

- 20 → Bore size (Item Ⓒ on the previous page)
- T → Mounting bracket

● Switch body only

SW - T2YLH

- T2YLH → Switch model No. (Item Ⓔ on the previous page)

How to order mounting brackets

Bore size (mm) / Mounting bracket	ø20	ø25	ø32	ø40
Axial foot (LB, LS)	CMK2-JG2-20-LS	CMK2-JG2-20-LS	CMK2-JG2-20-LS	CMK2-JG2-40-LS CMK2-JG2-20-LS (LB head side)
Flange (FA, FB)	CMK2-JG2-20-FA	CMK2-JG2-20-FA	CMK2-JG2-20-FA	CMK2-JG2-20-FA (for FB) CMK2-JG2-40-FA (for FA)

*1: For mounting brackets, mounting nuts are included with the axial foot and flange.
2: For axial foot (LB), two sets of the above "CMK2-JG2--LS" are required.

Internal structure and parts list

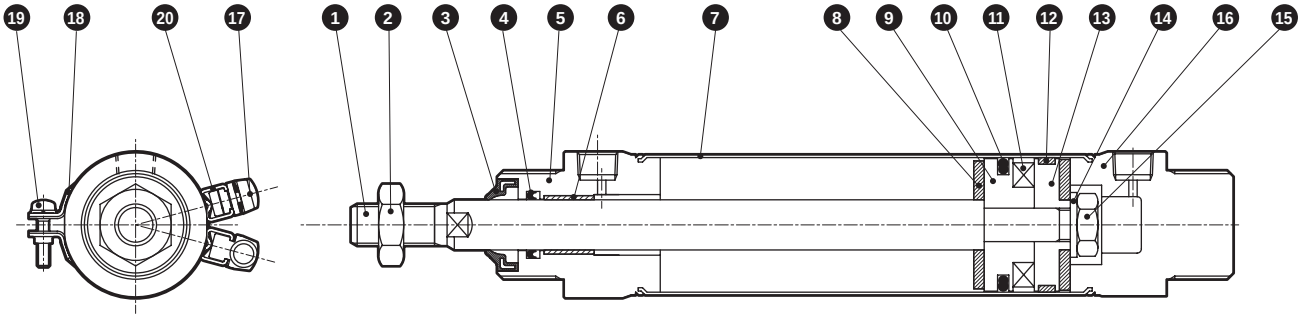

Cannot be disassembled

Note: This product is caulked and cannot be disassembled.

No.	Part name		Material	Remarks
1	Piston rod		Stainless steel	
2	Rod nut		Stainless steel	
3	Scraper	JG2	Nitrile rubber	
		JG3	Fluoro rubber	
4	Rod Packing	JG2	Nitrile rubber	
		JG3	Fluoro rubber	
5	Rod cover		Stainless steel	
6	Bush		Dry bearing	
7	Cylinder tube		Stainless steel	
8	Cushion rubber		Urethane rubber	
9	Piston A		Aluminum alloy	

No.	Part name		Material	Remarks
10	Piston Packing	JG2	Nitrile rubber	
		JG3	Fluoro rubber	
11	Magnet		–	
12	Wear ring		Resin	
13	Piston B		Aluminum alloy	
14	Spacer		Steel	Zinc chromate
15	Hexagon nut		Steel	Zinc chromate
16	Head cover		Stainless steel	
17	Switch		–	With switch only
18	Band		Stainless steel	With switch only
19	Pan head machine screw		Stainless steel	With switch only
20	Switch rail		Stainless steel	With switch only

Material of mounting bracket

Mounting	Material
LB/LS	Stainless steel
FA/FB	Stainless steel

● Note: Mounting bracket will be shipped with the product.

Dimensions

● Basic (00)

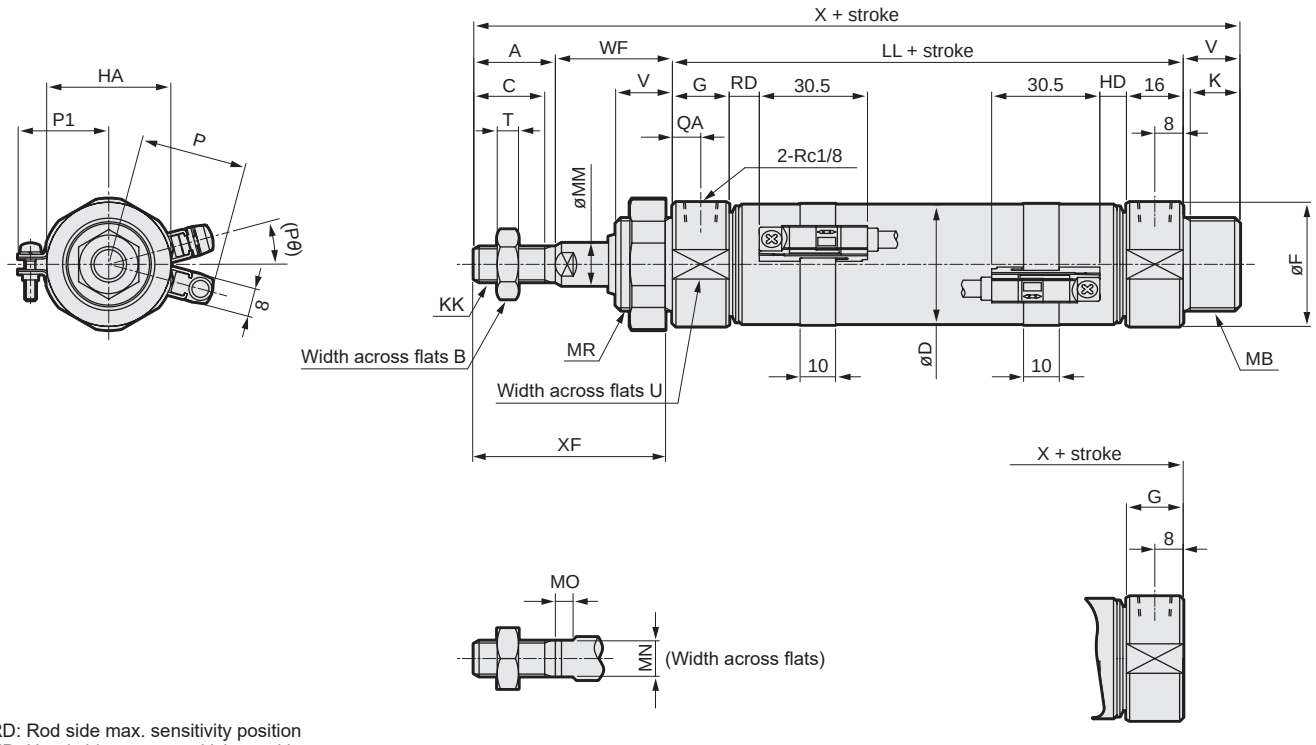

RD: Rod side max. sensitivity position
HD: Head side max. sensitivity position

Code	Basic (00) Basic dimensions																
Bore size (mm)	A	B	C	D	F	G	QA	HA	K	KK	LL	MR	MB	MM	MN	MO	T
ø20	20	13	18	21.4	30	16	8	35	14	M8x1.0	66	M26x1.5	M26x1.5	10	8	5	5
ø25	23	17	20	26.4	32	16	8	35	14	M10x1.25	69	M26x1.5	M26x1.5	12	10	5	6
ø32	23	17	20	33.6	36	16	8	35	14	M10x1.25	69	M26x1.5	M26x1.5	12	10	5	6
ø40	25	19	22	41.6	45	16	8	38	14	M12x1.5	73	M30x1.5	M26x1.5	14	12	6	7

Code						With switch					Boss cutoff type
Bore size (mm)	U	V	WF	X	XF	RD	HD	P	P1	(Pθ)°	X
ø20	28	16	28	130	48	7	6	23.1	19.5	22	114
ø25	30	16	28	136	51	8.5	7.5	25.6	22	18	120
ø32	34	16	28	136	51	8.5	7.5	30.1	25.5	15	120
ø40	43	16	28	142	53	10.5	9.5	34.1	29.5	12	126

SCP*3
CMK2
CMA2
SCM
SCG
SCA2
SCS2
CKV2
CAV2/COVP/N2
SSD2
SSG
SSD
CAT
MDC2
MVC
SMG
MSD/MSDG
FC*
STK
SRL3
SRG3
SRM3
SRT3
MRL2
MRG2
SM-25
ShkAbs
FJ
FK
Spd Contr
Ending

Dimensions

● Axial foot (LB)

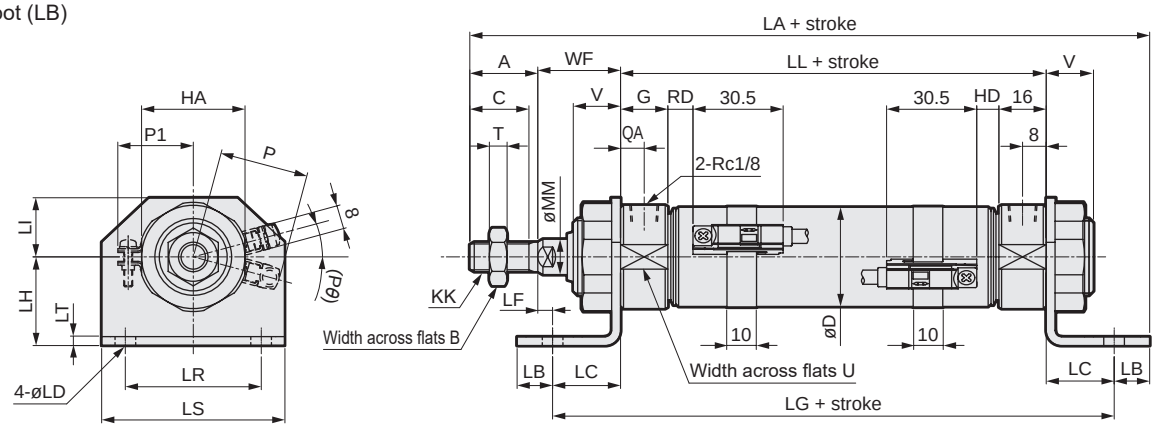

Code	Axial foot (LB) Basic dimensions														Mounting dimensions				
Bore size (mm)	A	B	C	D	G	QA	HA	KK	LL	MM	T	U	V	WF	LA	LB	LC	LD	LF
ø20	20	13	18	21.4	16	8	35	M8x1.0	66	10	5	28	16	28	149	12	23	7	5
ø25	23	17	20	26.4	16	8	35	M10x1.25	69	12	6	30	16	28	155	12	23	7	5
ø32	23	17	20	33.6	16	8	35	M10x1.25	69	12	6	34	16	28	155	12	23	7	5
ø40	25	19	22	41.6	16	8	38	M12x1.5	73	14	7	43	16	28	161	12	23	7	5

Code							With switch				
Bore size (mm)	LG	LH	LI	LR	LS	LT	RD	HD	P	P1	(Pθ)°
ø20	112	30	20	46	62	3	7	6	23.1	19.5	22
ø25	115	30	20	46	62	3	8.5	7.5	25.6	22	18
ø32	115	30	20	46	62	3	8.5	7.5	30.1	25.5	15
ø40	119	30	20	46	62	3	10.5	9.5	34.1	29.5	12

● Axial foot (one side) (LS)

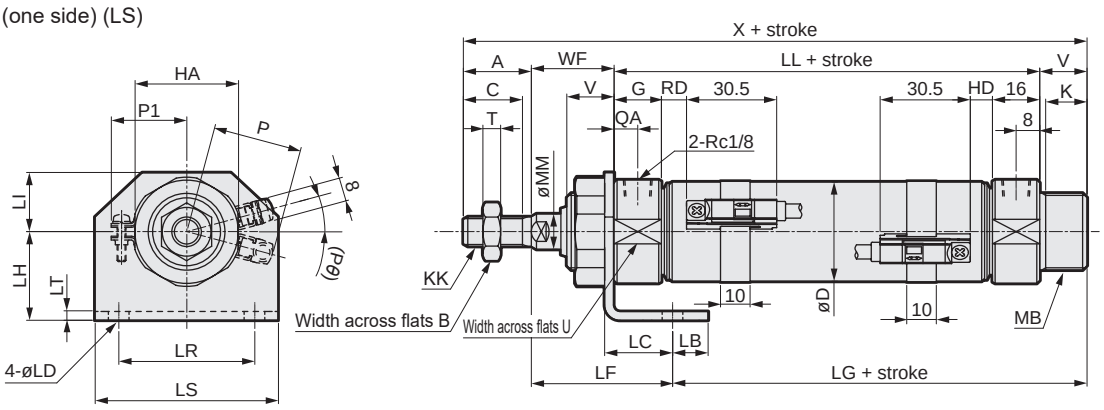

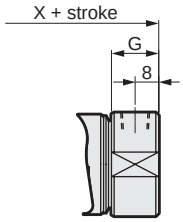

*1: Max. stroke: 50.

Code	Axial foot (LS) Basic dimensions																
Bore size (mm)	A	B	C	D	G	QA	HA	K	KK	LL	MB	MM	T	U	V	WF	X
ø20	20	13	18	21.4	16	8	35	14	M8x1.0	66	M26x1.5	10	5	28	16	28	130
ø25	23	17	20	26.4	16	8	35	14	M10x1.25	69	M26x1.5	12	6	30	16	28	136
ø32	23	17	20	33.6	16	8	35	14	M10x1.25	69	M26x1.5	12	6	34	16	28	136
ø40	25	19	22	41.6	16	8	38	14	M12x1.5	73	M26x1.5	14	7	43	16	28	142

Code	Mounting dimensions										With switch					Boss cutoff type	
Bore size (mm)	LB	LC	LD	LF	LG	LH	LI	LR	LS	LT	RD	HD	P	P1	(Pθ)°	X	LG
ø20	12	23	7	48	62	30	20	46	62	3	7	6	23.1	19.5	22	114	46
ø25	12	23	7	48	65	30	20	46	62	3	8.5	7.5	25.6	22	18	120	49
ø32	12	23	7	48	65	30	20	46	62	3	8.5	7.5	30.1	25.5	15	120	49
ø40	12	23	7	48	69	30	20	46	62	3	10.5	9.5	34.1	29.5	12	126	53

Dimensions

● Rod side flange (FA)

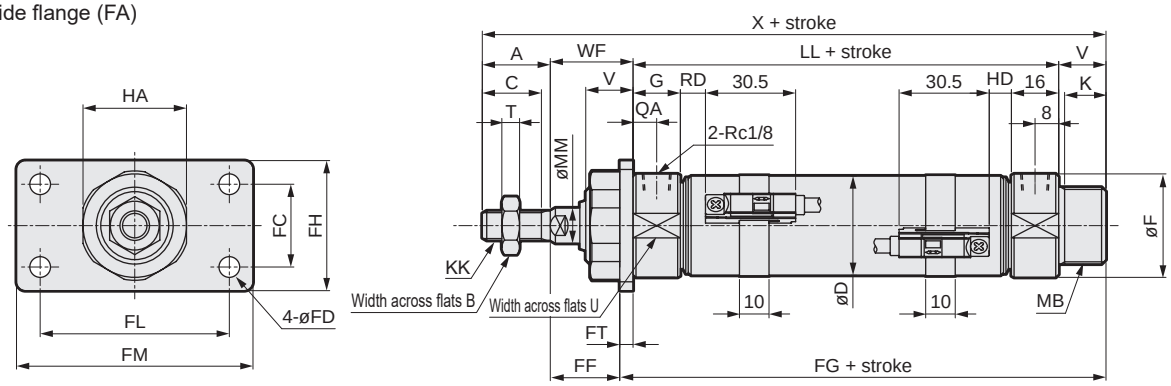

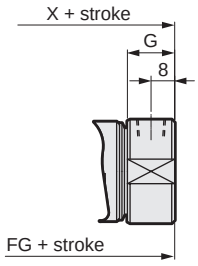

Code	Rod side flange (FA) Basic dimensions																	
Bore size (mm)	A	B	C	D	F	G	QA	HA	K	KK	LL	MB	MM	T	U	V	WF	X
ø20	20	13	18	21.4	30	16	8	35	14	M8x1.0	66	M26x1.5	10	5	28	16	28	130
ø25	23	17	20	26.4	32	16	8	35	14	M10x1.25	69	M26x1.5	12	6	30	16	28	136
ø32	23	17	20	33.6	36	16	8	35	14	M10x1.25	69	M26x1.5	12	6	34	16	28	136
ø40	25	19	22	41.6	45	16	8	38	14	M12x1.5	73	M26x1.5	14	7	43	16	28	142

Code	Mounting dimensions								With switch					Boss cutoff type	
Bore size (mm)	FC	FD	FF	FG	FH	FL	FM	FT	RD	HD	P	P1	(Pθ)°	X	FG
ø20	28	7	23	87	44	64	80	5	7	6	23.1	19.5	22	114	71
ø25	28	7	23	90	44	64	80	5	8.5	7.5	25.6	22	18	120	74
ø32	28	7	23	90	44	64	80	5	8.5	7.5	30.1	25.5	15	120	74
ø40	28	7	23	94	44	64	80	5	10.5	9.5	34.1	29.5	12	126	78

● Head side flange (FB)

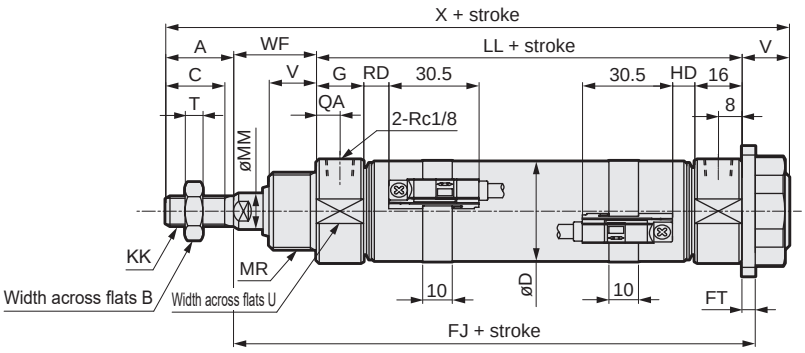

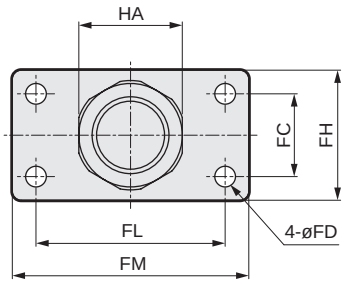

Code	Head side flange (FB) Basic dimensions																
Bore size (mm)	A	B	C	D	G	QA	HA	K	KK	LL	MR	MM	T	U	V	WF	X
ø20	20	13	18	21.4	16	8	35	14	M8x1.0	66	M26x1.5	10	5	28	16	28	130
ø25	23	17	20	26.4	16	8	35	14	M10x1.25	69	M26x1.5	12	6	30	16	28	136
ø32	23	17	20	33.6	16	8	35	14	M10x1.25	69	M26x1.5	12	6	34	16	28	136
ø40	25	19	22	41.6	16	8	38	14	M12x1.5	73	M30x1.5	14	7	43	16	28	142

Code	Mounting dimensions							With switch				
Bore size (mm)	FC	FD	FH	FJ	FL	FM	FT	RD	HD	P	P1	(Pθ)°
ø20	28	7	44	99	64	80	5	7	6	23.1	19.5	22
ø25	28	7	44	102	64	80	5	8.5	7.5	25.6	22	18
ø32	28	7	44	102	64	80	5	8.5	7.5	30.1	25.5	15
ø40	28	7	44	106	64	80	5	10.5	9.5	34.1	29.5	12

SCP*3
CMK2
CMA2
SCM
SCG
SCA2
SCS2
CKV2
CAV2/COVP/N2
SSD2
SSG
SSD
CAT
MDC2
MVC
SMG
MSD/MSDG
FC*
STK
SRL3
SRG3
SRM3
SRT3
MRL2
MRG2
SM-25
ShkAbs
FJ
FK
Spd Contr
Ending

Dimensions

● Eye bracket integrated (CC)

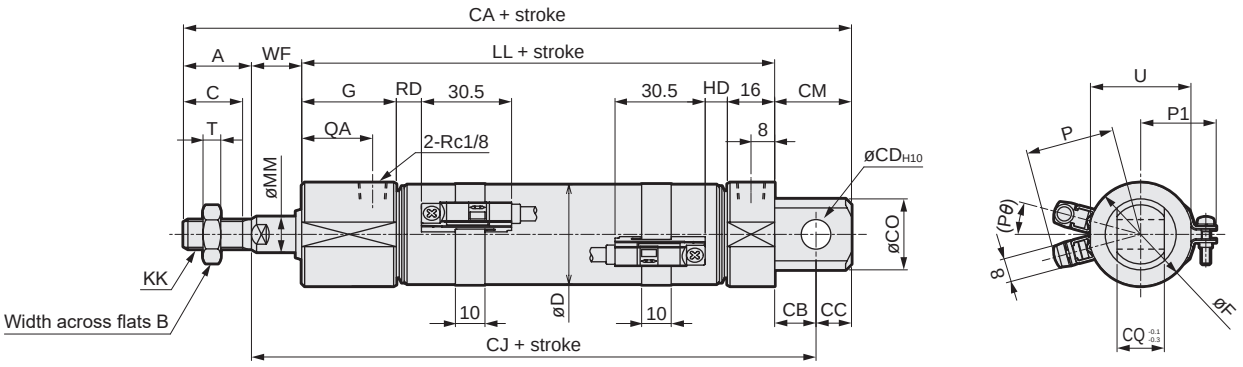

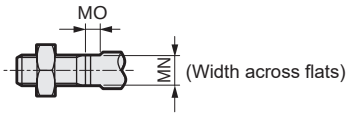

Code	Eye bracket integrated (CC) Basic dimensions													Mounting dimensions					
Bore size (mm)	A	B	C	D	F	G	QA	KK	LL	MM	T	U	WF	CA	CB	CC	CD	CJ	CM
ø20	20	13	18	21.4	30	32	24	M8x1.0	82	10	5	28	12	135	12	9	8	106	21
ø25	23	17	20	26.4	32	32	24	M10x1.25	85	12	6	30	12	141	12	9	8	109	21
ø32	23	17	20	33.6	36	32	24	M10x1.25	85	12	6	34	12	146	14	12	10	111	26
ø40	25	19	22	41.6	45	32	24	M12x1.5	89	14	7	43	12	156	16	14	12	117	30

Code			With switch				
Bore size (mm)	CO	CQ	RD	HD	P	P1	(Pθ)°
ø20	22	16	7	6	23.1	19.5	22
ø25	24	16	8.5	7.5	25.6	22	18
ø32	24	16	8.5	7.5	30.1	25.5	15
ø40	30	20	10.5	9.5	34.1	29.5	12

Accessory dimensions

● Rod eye (I)

Material: Stainless steel

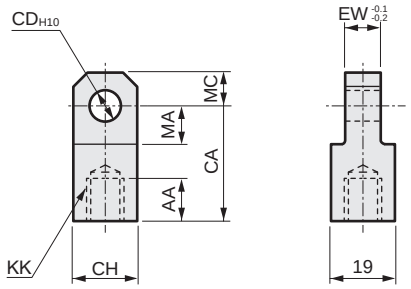

Model No.	Applicable bore size (mm)	AA	CA	CD	CH	EW	KK	MA	MC	Weight (g)
M1-I-20S	20	14	30	10	19	8	M8x1.0	13	10	60
M1-I-30S	25 / 32	14	36	12	25	10	M10x1.25	16	12	106
M1-I-40S	40	14	36	12	25	10	M12x1.5	16	12	100

● Rod clevis (Y)

Material: Stainless steel

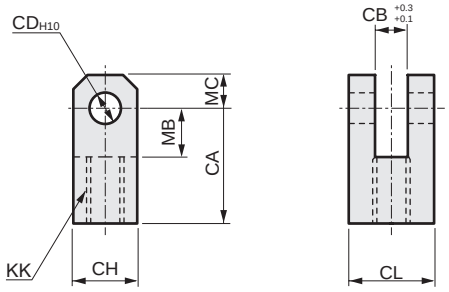

Model No.	Applicable bore size (mm)	CA	CB	CD	CH	CL	KK	MB	MC	Weight (g)
M1-Y-20S	20	30	8	10	19	19	M8x1.0	13	10	99
M1-Y-30S	25 / 32	36	10	12	25	25	M10x1.25	16	12	197
M1-Y-40S	40	36	10	12	25	25	M12x1.5	16	12	193

Note: A pin and split washer pin are included.

● Rod clevis pin (P)

Material: Stainless steel

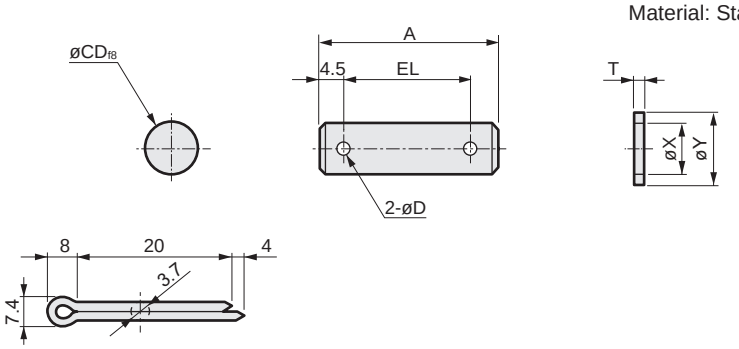

Model No.	Applicable bore size (mm)	A	D	CD	EL	T	X	Y	Weight (g)
M1-P-20S	20	37	4	10	28	1.6	10.5	18	29
M1-P-30S	25/32/40	46	4	12	37	2.3	12.5	22	50

Note: A pin and split washer pin for rod clevis use are included with the product.

CMK2 Series common dimensions (T1*, T8*, 2-color LED, with switch)

● CMK2-**-**-T$^{2}_{3}$YH/V

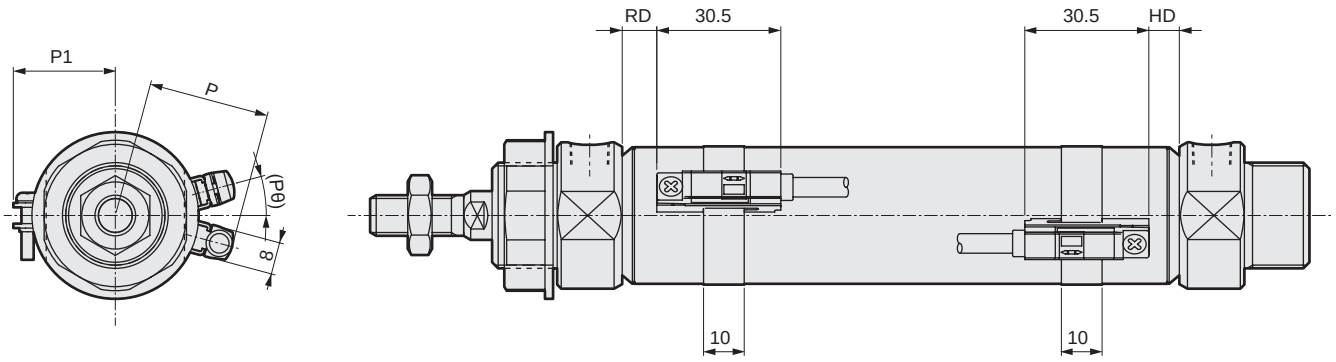

2-color LED switch mounting dimensions

Code / Bore size (mm)	1-color LED (T1, T8) 2-color LED (T Y)$^{2}_{3}$							
	RD *1		HD *2		P		P1	(Pθ)°
	T1, T$^{2}_{3}$Y	T8	T1, T$^{2}_{3}$Y	T8	T1	T$^{2}_{3}$Y, T8		
ø20	7.0	2.0	6.0	1	28.5	23.1	19.5	22
ø25	8.5	3.5	7.5	2.5	31.0	25.6	22.0	18
ø32	8.5	3.5	7.5	2.5	35.5	30.1	25.5	15
ø40	10.5	5.5	9.5	4.5	39.5	34.1	29.5	12

*1: RD dimension of CMK2-S is shown in Table 1 below.
*2: HD dimension of CMK2-SR is shown in Table 2 below.

Table 1

Code / Bore size (mm)	RD													
	T1, T$^{2}_{3}$Y							T8						
	25 or less	Over 25 to 50	Over 50 to 100	Over 100 to 150	Over 150 to 200	Over 200 to 250	Over 250 to 300	25 or less	Over 25 to 50	Over 50 to 100	Over 100 to 150	Over 150 to 200	Over 200 to 250	Over 250 to 300
ø20	32.0	34.0	61.0	88.0	115.0	142.0	169.0	27.0	29.0	56.0	83.0	110.0	137.0	164.0
ø25	33.5	38.5	68.5	98.5	128.5	158.5	188.5	28.5	33.5	63.5	93.5	123.5	153.5	183.5
ø32	33.5	38.5	68.5	98.5	128.5	158.5	188.5	28.5	33.5	63.5	93.5	123.5	153.5	183.5
ø40	35.5	40.5	70.5	100.5	130.5	160.5	190.5	30.5	35.5	65.5	65.5	125.5	155.5	185.5

Table 2

Code / Bore size (mm)	HD													
	T1, T$^{2}_{3}$Y							T8						
	25 or less	Over 25 to 50	Over 50 to 100	Over 100 to 150	Over 150 to 200	Over 200 to 250	Over 250 to 300	25 or less	Over 25 to 50	Over 50 to 100	Over 100 to 150	Over 150 to 200	Over 200 to 250	Over 250 to 300
ø20	31.0	33.0	60.0	87.0	114.0	141.0	168.0	26.0	28.0	55.0	82.0	109.0	136.0	163.0
ø25	32.5	37.5	67.5	97.5	127.5	157.5	187.5	27.5	32.5	62.5	92.5	122.5	152.5	182.5
ø32	32.5	37.5	67.5	97.5	127.5	157.5	187.5	27.5	32.5	62.5	92.5	122.5	152.5	182.5
ø40	34.5	39.5	69.5	99.5	129.5	159.5	189.5	29.5	34.5	64.5	94.5	124.5	154.5	184.5

Dimensions with options

● Boss cutoff (V)

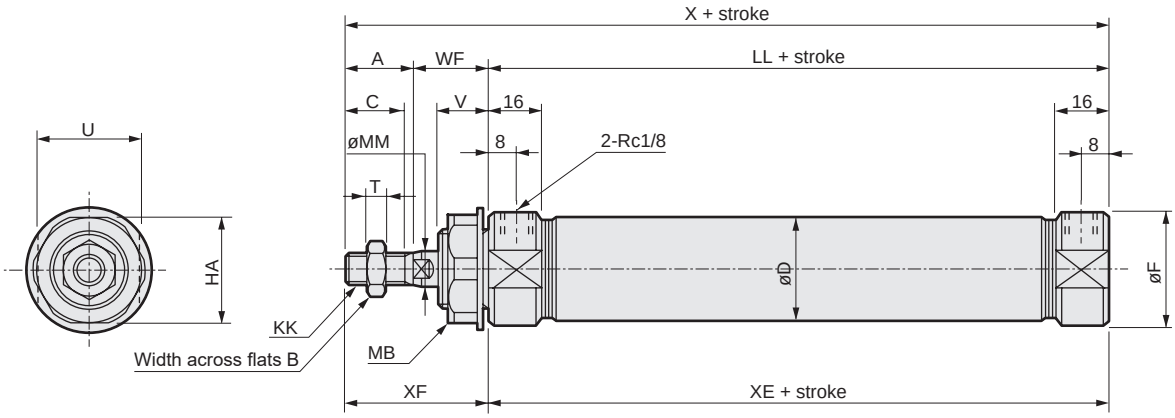

Note: Dimensions of other mountings are the same as those of the standard. Refer to pages 91 to 97. (Mountable, mounting: 00, LS, FA, TA)

Code	Basic (00) Basic dimensions																
Bore size (mm)	A	B	C	D	F	HA	KK	LL	MB	MM	T	U	V	WF	X	XE	XF
ø20	20	13	18	21.4	28	26	M 8x1.0	66	M18x1.5	10	5	24	14	24	110	66	44
ø25	23	17	20	26.4	32	35	M10x1.25	69	M26x1.5	12	6	30	16	23	115	69	46
ø32	23	17	20	33.6	36	35	M10x1.25	69	M26x1.5	12	6	34	16	23	115	69	46
ø40	25	19	22	41.6	45	35	M12x1.5	73	M26x1.5	14	7	43	16	23	121	73	48

● With push-in fitting (-F)

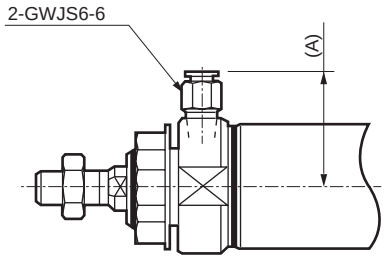

● With push-in fitting (-FE)

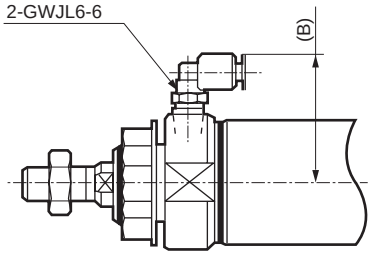

Code / Bore size (mm)	A	B
ø20	30.5	34.5
ø25	32.5	36.5
ø32	34.5	38.5
ø40	39	43

Pneumatic components

Safety Precautions

Be sure to read this section before use.
Refer to Intro Page 73 for general information of the cylinder, and to Intro Page 80 for general information of the cylinder switch.

Product-specific cautions: Medium bore size cylinder CMK2 Series

Design/selection

1. Fine speed CMK2-F

CAUTION

- Use without lubrication.
  - Applying lubrication may cause changes in characteristics.
- Assemble the speed controller near the cylinder.
  - When installed at a distant place from the cylinder, the adjustment becomes unstable.
  - Use the SC-M3/M5, SC3W, SCD-M3/M5 or SC3U Series speed controller.
- In general, the speed is stabler at higher air pressure and lower load factor.
  - Use at a 50% or less load factor.
- Stable speed control is achieved with a meter-out circuit.
  - When fine speed activation is performed with operating direction PUSH for the single rod cylinder, the popping out phenomenon occurs when operation starts if the load resistance is low. For countermeasures, use the ⓑ, ⓒ or ⓓ circuits. Note that circuit ⓓ is most stable.

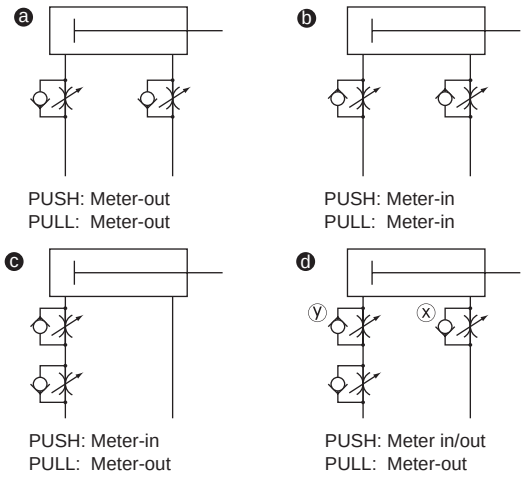

Speed adjustment method for PUSH operation of ⓓ circuit:
1. Set the speed with the speed controller x.
2. Restrict the speed with the speed controller y until there is no popping out.
3. Check the speed again.

(*1) When comparing ⓑ, ⓒ and ⓓ, the ⓓ circuit is the most stable.

(*2) For vertical mounting, combine the cylinder with a meter-out circuit, as it will fall under its own weight when a meter-in circuit is used.

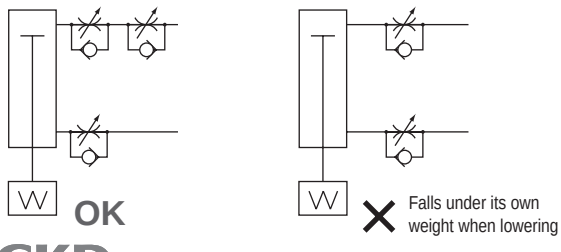

(*3) Use the circuit shown in the figure below for the serial connection of the speed controllers.

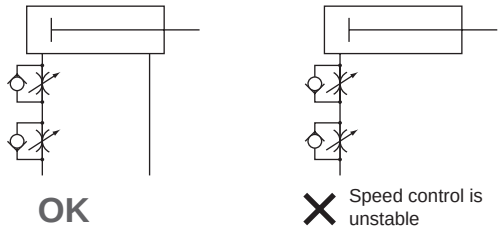

(Guidelines for pop-out generation)
Popping out occurs in the following cases.
· Thrust > Resistance

* Resistance: Thrust caused by residual pressure on the exhaust side (in the fine speed, suction pressure = residual pressure) + { When using horizontally: frictional force caused by load / When using vertically: load self-weight }

- Do not apply a lateral load to the cylinder. Also install the sliding guide so that it is not twisted.
  - With a lateral load, operation will become unstable.
- Avoid using this product where vibration is present.
  - The product will be adversely affected by vibration and operation will become unstable.

2. Coolant proof CMK2-G2/G3

CAUTION

- Do not apply an eccentric load to the piston rod. The service life of the scraper or bearing could be shortened.
- If the piston rod is not exposed to splattered coolant or water, use the G or G1 Series.
  In the case that the G2 or G3 Series are not exposed to splattering of coolant or water, the lubrication of the piston rod will run out and the service life will be shortened.
- Mount a speed controller on the cylinder.
  - Mount a speed controller on the cylinder.
    Use each cylinder within the applicable working piston speed range.

3. Position locking CMK2-Q

WARNING

- If pressure is supplied to port Ⓐ when both ports are not pressurized and the piston is locked, the lock may not be released or the piston rod may suddenly pop out just after the lock is released. This can be extremely hazardous. To release the lock mechanism, make sure to supply pressure to port Ⓑ. Check that load is not applied to the lock mechanism.

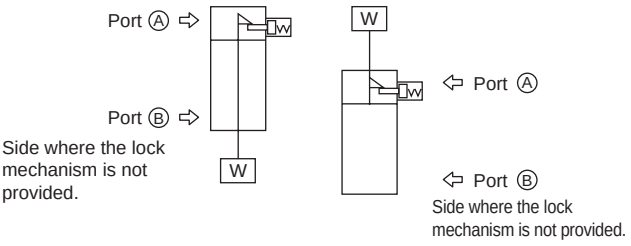

- For usage where the drop rate is increased using the quick exhaust valve, the lock may not release normally because the cylinder body starts operating before the lock pin.
  For the position locking cylinder, do not use the quick exhaust valve.
- Do not use 3-position solenoid valves.
  Do not use the cylinder in combination with 3-position (especially closed center metal seal) solenoid valves. If the port at the side where the lock mechanism is provided is pressurized, the lock cannot be engaged. Even if it is locked once, the air leaked from the solenoid valve may enter the cylinder, and the lock may be released after a certain period of time.

⚠ CAUTION

- Cylinder load factor must be 50% or less.
  - If the load factor is high, the lock may not be released, or the lock section may be damaged.
- Do not use multiple synchronized cylinders.
  Do not use in such a way that 1 workpiece is moved by synchronizing 2 or more position locking cylinders. Lock release may fail for one of the cylinders.

4. Low hydraulic CMK2-H

⚠ CAUTION

- This product is a pneumatic cylinder which enables the use of hydraulic fluid as its working fluid.
  Not compliant with JIS standards on activation and leak inspection for hydraulic cylinders.

5. Exterior 100% stainless steel/water resistant (CMK2-JG2/JG3)

⚠ CAUTION

- Use only after carefully confirming component structural materials (only exterior parts are stainless steel), valve structure, working fluids, and compatibility with the working environment.
- The cylinder bearings contain a minute amount of mineral oil. Within the product specifications range, it is processed so as not to discharge, but carefully consider the installation location.
- Do not apply eccentric load to the piston rod. The service life of the scraper or bearing could be shortened.
- Mount the speed controller on the cylinder.
  - Mount the speed controller on the cylinder.
    Use each cylinder within the applicable working piston speed range.
- If not exposed to splashes of water, the piston rod lubrication will run out, shortening the service life.

Mounting, installation and adjustment

1. Common

⚠ CAUTION

- Do not rotate the cover.
  - If the cover is turned when mounting the cylinder or screwing the pipe fitting into the port, damage from the cover connection could occur.

2. Single acting CMK2-S/SR

⚠ CAUTION

- Do not leave in a pressurized state.
  If it is left pressurized for long periods, the piston rod may not return due to spring load when the pressure is released.

3. Stroke adjustable CMK2-P/R

⚠ CAUTION

- Securely lock the adjustable stroke bolt with the lock nut.
- Observe steps (1) to (5) when adjusting the stroke.
  If adjustments are not made this way, the seal washer will be damaged after one or two adjustments.

■ [Adjustable stroke procedure]

(1) First loosen the lock nut as shown in Fig. 1.

(2) Second, remove the seal washer from the head cover by hand, and make a state as shown in Fig. 2.

(3) Turn the angle adjustment bolt, nut and seal washer together as shown in Fig. 3, and adjust the stroke. Check that the rubber section of the seal washer does not bite into the thread part.

(4) After adjusting the stroke, move the seal washer near the head cover by hand as shown in Fig. 4.

(5) Tighten with the lock nut as shown in Fig. 5. Check that the rubber section of the seal washer does not bite into the thread part.

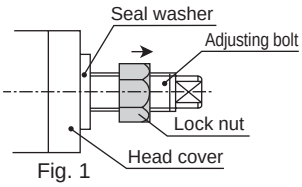

Fig. 1

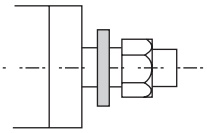
Fig. 2

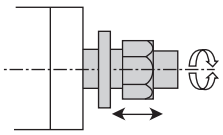
Fig. 3

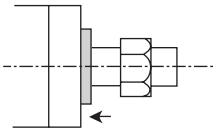
Fig. 4

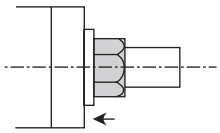
Fig. 5

■ After adjusting the stroke, securely tighten the lock nut with the tightening torque in Table 1. Ensure that the lock nut does not loosen and cause external leakage in the course of usage.

Table 1 Tightening torque

Unit: Nm

Bore size	CMK2-P (push)	CMK2-R (pull)
ø20	15.8	11.9
ø25	33.4	37
ø32	33.4	37
ø40	55.8	37

■ Because a seal washer is used for sealing the stud bolt, the sealing cannot withstand frequent usage.

■ If the stroke is adjusted, the cushion cannot function.

4. Heat resistance CMK2-T

⚠CAUTION

■ Magnet is not built in.

5. Rubber-air cushioned CMK2-*C

⚠CAUTION

■ Note that, structurally, the stroke end position cannot be retained if air supply is cut off.
When detecting the stroke end by switch, set the switch position with pneumatic pressure applied, as otherwise the position may be out of the detection range.

6. Position locking CMK2-Q

⚠CAUTION

■ The lock mechanism functions at the stroke end, so that if the stopper is engaged during the stroke by the external stopper, the lock mechanism may not work and the piston could fall. When setting a load, make sure to check that the lock mechanism functions before installing the product.

■ Supply pressure equal to or higher than the min. working pressure to the port on the lock mechanism side for each model.

■ When the piping at the side where the lock mechanism is provided is long and thin, or when the speed controller is far away from the cylinder port, note that it takes time to engage the lock. Clogging in the silencer mounted on the EXH. port of the solenoid valve may also cause the same result.

7. Fine speed CMK2-F

⚠CAUTION

■ Perform adjustment such as centering so that a lateral load is not applied to the cylinder.
Adjust and install the sliding guide so that it is not twisted.

■ When the load or the resistance fluctuates, operation becomes unstable.

■ With a large difference between static friction and kinematic friction of the guide, operation becomes unstable.

8. Rotation-stop CMK2-M

⚠CAUTION

■ Do not use the product so as to apply rotation torque to the piston rod.
The bushing for the rotation lock may deform and significantly shorten the service life.

■ When fixing a workpiece onto the tip of the piston rod, retract the piston rod to the stroke end and apply a wrench to the section protruding from the rod's parallel section. Tighten so that torque is not applied to the cylinder body.

9. Exterior 100% stainless steel/water resistant (CMK2-JG2/JG3)

⚠CAUTION

■ Apply grease when using the pin to prevent seizing.

Use/maintenance

1. Common (with T-switch)

⚠CAUTION

■ When moving the switch position to the stroke direction

● The 1-color LED switch can be fine-tuned by ±3 mm from the default. If the adjusting range exceeds ±3 mm, or when fine-tuning the 2-color LED switch, move the band position.

● Loosen the switch fixing screw, shift the switch along the rail, then tighten at the specified position.
When using T2, T3, T0, or T5, use a flathead screwdriver (clockwork screwdriver, precision screwdriver, etc.) with a grip diameter of 5 to 6 mm, a 2.4 mm or smaller tip, and a thickness of 0.3 mm or less to tighten the screws with a tightening torque of 0.1 to 0.2 N·m.
When using T1, T*C, T2J, T2Y, T3Y, or T8, tighten the screw with a tightening torque of 0.5 to 0.7 N·m.

- The switch bracket rail has a marking 4 mm from the rail end. Use as a guide to the mounting position when replacing the switch.
  Switch rail markings are set to the default switch max. sensitivity position.
  The max. sensitivity position will change when the switch is changed or when the band is moved. Adjust the position accordingly in this case.

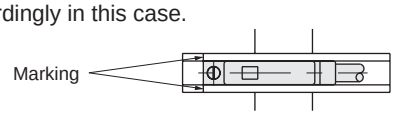

■ When moving the switch position to the circumferential direction

- Loosen the band fixing screw, shift the switch rail in the circumferential direction, then tighten at the specified position. Tightening torque is 0.6 to 0.8N·m.

■ Shifting the band position

- Loosen the band fixing screw, shift the switch rail and band along the cylinder tube, and tighten at the specified position. Tightening torque is 0.6 to 0.8N·m.

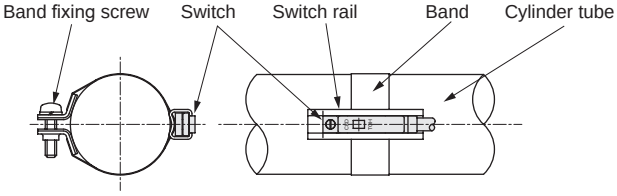

2. Rubber-air cushioned CMK2-*C

⚠ CAUTION

■ Do not rapidly discharge air from the cylinder after performing low speed operation outside the catalog specifications range. (Example: Removing piping or coupler, etc.)
Otherwise the rubber-air cushion may fall. Especially when the air pressure is high, this becomes more likely. Therefore, be careful.

3. Position locking CMK2-Q

⚠ WARNING

■ For safety purposes, prevent the load from falling under its own weight during maintenance.

■ When stopping the piston with an external buffer device (shock absorber, etc.), adjust it so that there is no bound.
If the piston bounds at the stroke end, the sleeve and stopper piston will collide strongly and may result in damage of the locking mechanism.
Inspect the piston once or twice a year to make sure there is no damage to the retainer caused by this phenomenon.

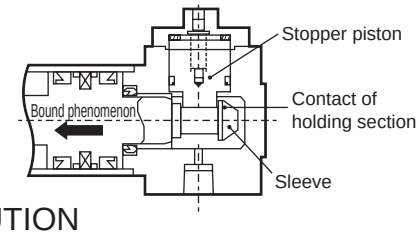

⚠ CAUTION

■ Because this cylinder is non-disassembly, do not apply excessive force to the end cover or tube.
If a back pressure is applied to the lock mechanism side, the lock may be released. Use a discrete solenoid valve for brake release, or use an individual exhaust manifold.

■ After the lock mechanism is manually operated, make sure to return the manual override to the original state before use. Do not perform manual operation except for adjustment, as it is dangerous.

■ When mounting or adjusting the cylinder, release the lock.
If mounting work, etc., is done while the lock is engaged, the lock part may be damaged.

■ Use the speed controller with meter-out control.
If the meter-in control is used, the lock may not be released.

■ At the side where the lock mechanism is attached, be sure to use the cylinder from the stroke end.
If the cylinder piston does not reach the stroke end, the lock may not be engaged or the lock may not be released.

■ Manual override non-locking release method
By screwing the hexagon socket head cap screw into the stopper piston and pulling the bolt 4 mm with force of 20 N or more, the stopper piston moves and the lock is released. (When horizontally installed with no load or with the opposite side port pressurized). When the screw is released, the internal spring causes the stopper piston to return. When it fits into the piston rod groove, the piston is locked.

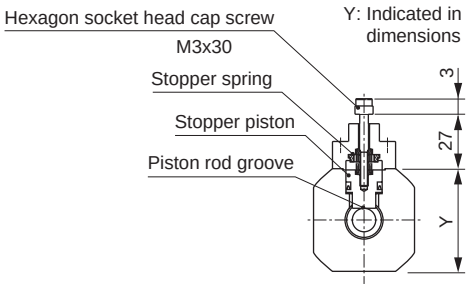

■ Manual override locking release method
By rotating the round nut leftward (counterclockwise), the stopper piston moves and the lock is released.
Rotating the round nut to the right (clockwise) to set it in the locked position causes the stopper piston to return. When it fits into the piston rod groove, the piston is locked.

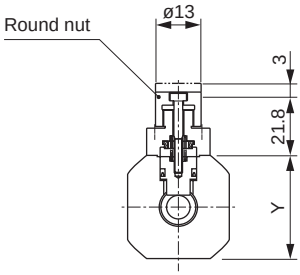

4. Exterior 100% stainless steel/water resistant (CMK2-JG2/JG3)

⚠ CAUTION

■ It is recommended to minimize cleaning of the sliding section and to apply grease after cleaning.
If water splattering is temporary, periodically apply grease.
Contact CKD for details on maintenance greases.

■ After installation, check for leaks from pipes, for proper wire connections and that the product is installed correctly.

■ Do not use the product as footing or place any heavy objects on top of the product.

■ If the product has been out of use for one month or more, perform a test run before starting actual operation.

CMA2

Medium bore size cylinder

ø20/ø30/ø40

Standard

Overview

Medium bore size (ø20 to ø40) series of general purpose cylinders that can be disassembled.

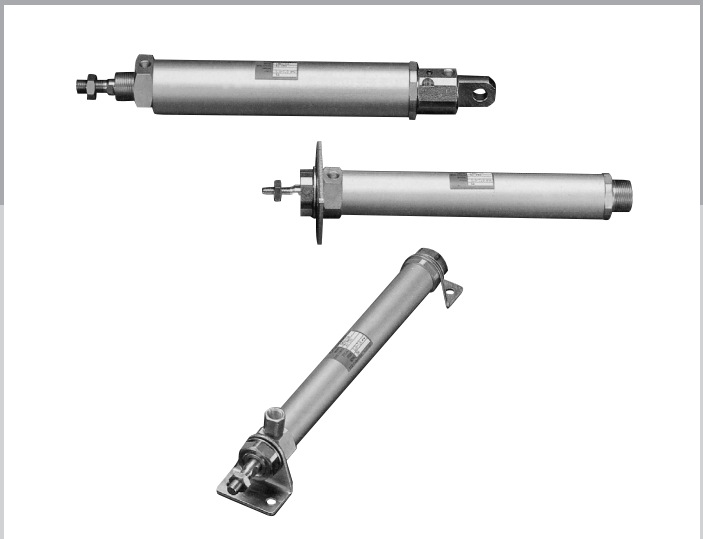

CONTENTS

Series variation	206
● Double acting/single rod (CMA2)	208
● Double acting/direct (CMA2-E)	222
CMA2 Series common accessory dimensions	221

The cylinder switches T2YH, T2YV, T3YH, and T3YV are scheduled for end of production at the end of December 2023.

⚠ For your safety, refer to precautions for general cylinders on Intro Page 73 and precautions for cylinder switches on Intro Page 80.

Series variation

Micro cylinder CMA2 series

Variation	Model No. JIS symbol	Bore size (mm)	Standard stroke (mm)								Min. stroke (mm)	Max. stroke (mm)	Available stroke (mm)
			25	50	75	100	150	200	250	300			
Double acting/ single rod	CMA2	ø20 ø30 ø40	●	●	●	●	●	●	●	●	1	700	1000 1200 1500
Double acting/ direct	CMA2-E	ø20/ø30/ø40	●	●	●	●	●	●	●	●	1	700	700

●: Standard, ◎: Option, ○: Made to order, ■: Not available

	Custom stroke (per mm)	Mounting									Option					Accessory			Switch	Page
		Basic	Axial foot Two sides	Axial foot One side	Rod side flange	Head side flange	Eye bracket	Clevis bracket	Rod side trunnion	Head side trunnion	Bellows (100°C)	Bellows (250°C)	Piston rod material change	Same port position	Copper and PTFE free	Rod eye	Rod clevis	Clevis bracket		
		00	LB	LS	FA	FB	CA	CB	TA	TB	J	L	M	P	P6	I	Y	B2		
	1	●	●	●	●	●	●	●	●	●	◎	◎	◎	◎	◎	◎	◎	◎	◎	208
	1			●	●								◎			◎	◎	◎	◎	222

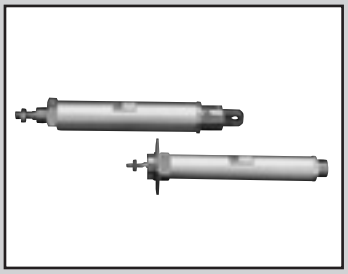

Medium bore size cylinder
Standard single rod

CMA2 Series

● Bore size: ø20/ø30/ø40

JIS symbol ● Double acting cylinder single rod

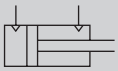

RoHS CAD

Specifications

Item	CMA2		
Bore size mm	ø20	ø30	ø40
Actuation	Double acting		
Working fluid	Compressed air		
Max. working pressure MPa	0.7 (≈100 psi, 7 bar)		
Min. working pressure MPa	0.1 (≈15 psi, 1 bar)		
Proof pressure MPa	1.05 (≈150 psi, 10.5 bar)		
Ambient temperature °C	-10 (14°F) to 60 (140°F) (no freezing)		
Port size	Rc1/8		
Stroke tolerance mm	$^{+1.0}_{0}$(to 200), $^{+1.2}_{0}$(to 1000)		
Working piston speed mm/s	50 to 500		
Cushion	None		
Lubrication	Not required (use turbine oil class 1 ISO VG32 if necessary for lubrication)		
Allowable absorbed energy J	0.024	0.05	0.093

Note: This product cannot absorb high energy generated by an external load. We recommend using an external shock absorber.

Stroke

Bore size (mm)	Standard stroke (mm)	Max. stroke (mm)	Available stroke (mm)	Min. stroke (mm)
ø20	25/50/75/100	700	1000	1
ø30	150/200/250		1200	
ø40	300		1500	

*1 : The custom stroke is available in 1 mm increments.
*2 : One side foot (LS) has the max. stroke of 50 mm.
*3 : The stroke will be 25 mm and over with bellows "J". Contact CKD when stroke is shorter than 25 mm.
*4 : The min. working pressure of the cylinder must be less than 50% of working pressure in order to be effective in preventing the popping out. Refer to Ending Page 69.

Min. stroke with switch

Switch model No.	1	2	3
T0, T5, T2, T3	10	27	51
T2W, T3W	10	31	55
T2Y, T3Y, T1	10	25	49
T8	10	23	47

Switch specifications

● 1-color/2-color LED

Item	2-wire proximity	2-wire proximity			3-wire proximity				2-wire reed						
	T1H/T1V	T2H/T2V/ T2JH/T2JV	T2YH/ T2YV	T2WH/ T2WV	T3H/ T3V	T3PH/ T3PV	T3YH/ T3YV	T3WH/ T3WV	T0H/T0V		T5H/T5V		T8H/T8V		
Applications	For programming controller, relay, compact solenoid valve	Dedicated for programmable controller			For programmable controller, relay				For programmable controller, relay		For programmable controller, relay (no lamp), serial		For programmable controller, relay		
Output method	-				NPN output	PNP output	NPN output	NPN output	-						
Pwr. supp. V.	-				10 to 28 VDC				-						
Load voltage	85 to 265 VAC	10 to 30 VDC		24 VDC ±10%	30 VDC or less				12/24 VDC	100/110 VAC	5/12/24 VDC	100/110 VAC	12/24 VDC	110 VAC	220 VAC
Load current	5 to 100 mA	5 to 20 mA (*3)			100 mA or less		50 mA or less		5 to 50 mA	7 to 20 mA	50 mA or less	20 mA or less	5 to 50 mA	7 to 20 mA	7 to 10 mA
Indicator	LED (Lit when ON)	LED (Lit when ON)	Red/green LED (Lit when ON)	Red/green LED (Lit when ON)	LED (Lit when ON)	Yellow LED (Lit when ON)	Red/green LED (Lit when ON)	Red/green LED (Lit when ON)	LED (Lit when ON)		No indicator lamp		LED (Lit when ON)		
Leakage current	≤ 1 mA at 100 VAC, ≤ 2 mA at 200 VAC	1 mA or less			10 μA or less				0 mA						
Weight g	1 m:33 3 m:87 5 m:142	1 m:18 3 m:49 5 m:80	1 m:33 3 m:87 5 m:142	1 m:18 3 m:49 5 m:80	1 m:18 3 m:49 5 m:80		1 m:33 3 m:87 5 m:142	1 m:18 3 m:49 5 m:80	1 m:18 3 m:49 5 m:80				1 m:33 3 m:87 5 m:142		

*1: Refer to Ending Page 1 for detailed switch specifications and dimensions.
*2: Switches other than the above models, such as switches with connectors, are also available. Refer to Ending Page 1.
*3: The max. load current is 20 mA at 25°C. The current is lower than 20 mA if the operating ambient temperature around the switch is higher than 25˚C. (5 to 10 mA at 60°C)

Cylinder weight

(Unit: kg)

Item/mounting / Bore size (mm)	Product weight when stroke (S) = 0 mm					Weight per switch		Additional weight per S = 10 mm
						T		
	Basic (00)	Axial foot (LB)	Flange (FA)	Clevis (CA)	Trunnion (TA/TB)	Refer to the weight in the switch specifications.	Switch rail + Band weight	
ø20	0.14	0.29	0.20	0.27	0.19		0.005	0.01
ø30	0.29	0.55	0.44	0.50	0.39		0.005	0.014
ø40	0.47	0.73	0.62	0.69	0.67		0.009	0.02

(Example) Product weight of CMA2-FA-30-50-TOH-D
- Product weight when S = 0 mm..... 0.44kg
- Additional weight when S = 50 mm ..... Additional weight when S = 10 mm 0.014 x $\frac{\text{Product stroke (50)}}{10}$ = 0.07 kg
- Weight of 2 switches..... 0.036 kg
- Product weight ..... 0.44 kg + 0.07 kg +0.036 kg = 0.546 kg

Theoretical thrust table

(Unit: N)

Bore size (mm)	Operating direction	Working pressure MPa							
		0.1	0.15	0.2	0.3	0.4	0.5	0.6	0.7
ø20	Push	31.4	47.1	62.8	94.2	$1.26x10^2$	$1.57x10^2$	$1.88x10^2$	$2.20x10^2$
	Pull	23.6	35.3	47.1	70.7	94.2	$1.18x10^2$	$1.41x10^2$	$1.65x10^2$
ø30	Push	70.7	$1.06x10^2$	$1.41x10^2$	$2.12x10^2$	$2.83x10^2$	$3.53x10^2$	$4.24x10^2$	$4.95x10^2$
	Pull	59.4	89.1	$1.19x10^2$	$1.78x10^2$	$2.38x10^2$	$2.97x10^2$	$3.56x10^2$	$4.16x10^2$
ø40	Push	$1.26x10^2$	$1.88x10^2$	$2.51x10^2$	$3.77x10^2$	$5.03x10^2$	$6.28x10^2$	$7.54x10^2$	$8.80x10^2$
	Pull	$1.10x10^2$	$1.65x10^2$	$2.21x10^2$	$3.31x10^2$	$4.41x10^2$	$5.51x10^2$	$6.62x10^2$	$7.72x10^2$

SCP*3
CMK2
CMA2
SCM
SCG
SCA2
SCS2
CKV2
CAV2/COVP/N2
SSD2
SSG
SSD
CAT
MDC2
MVC
SMG
MSD/MSDG
FC*
STK
SRL3
SRG3
SRM3
SRT3
MRL2
MRG2
SM-25
ShkAbs
FJ
FK
Spd Contr
Ending

How to order

No switch (built-in magnet for switch)

CMA2 - FA - 20 - 50 ——— P I

With switch (built-in magnet for switch)

CMA2 - FA - 20 - 50 - T0H - R - P I

Ⓐ Mounting *1

Ⓑ Bore size

Ⓒ Stroke

Ⓓ Switch model No.

Ⓔ Switch quantity

Ⓕ Option *3, *4

Ⓖ Accessory *5

Code	Description
Ⓐ Mounting	
00	Basic
LB	Axial foot (Both sides)
LS	Axial foot (One side)
FA	Rod side flange
FB	Head side flange
CA	Eye bracket
CB	Clevis bracket (pin and washer included)
TA	Rod side trunnion
TB	Head side trunnion

Ⓑ Bore size (mm)

20	ø20
30	ø30
40	ø40

Ⓒ Stroke (mm)

Bore size	Stroke *2	Available stroke	Custom stroke
ø20	**1 to 700**	**1000**	**In 1 mm increments**
ø30	**1 to 700**	**1200**	
ø40	**1 to 700**	**1500**	

Ⓓ Switch model No.

Refer to the switch model No. table on the following page.

*** Lead wire length**

Blank	1 m (standard)
3	3 m (option)
5	5 m (option)

Ⓔ Switch quantity

R	1 on rod side
H	1 on head side
D	2
T	3

Ⓕ Option

		Max. ambient temp.	Instantaneous max. temp.
J	Bellows	100°C	200°C
L	Bellows	250°C	400°C
M	Piston rod material (stainless steel)		
P	Same port position		
P6	Copper and PTFE free		

Ⓖ Accessory

I	Rod eye
Y	Rod clevis (with pin and washer included)
B2	Clevis bracket (pin and snap ring included)

⚠ Precautions for model No. selection

*1 : One side foot (LS) has the max. stroke of 50 mm.
*2 : Refer to page 208 for the min. stroke with switch.
*3 : The stroke will be 25 mm and over with bellows "J". Contact CKD when stroke is shorter than 25 mm.
*4 : The instantaneous max. temperature is the temperature when sparks, cutting chips, etc., instantaneously contact the bellows.
*5 : "I" and "Y" cannot be selected together.

[Example of model No.]

CMA2-FA-20-50-T0H-R-PI

Model: Medium bore size cylinder/double acting/single rod

Ⓐ Mounting	: Rod side flange
Ⓑ Bore size	: ø20 mm
Ⓒ Stroke	: 50 mm
Ⓓ Switch model No.	: Reed T0H switch, lead wire 1m
Ⓔ Switch quantity	: 1 on rod side
Ⓕ Option	: Same port position
Ⓖ Accessory	: Rod eye

[D] Switch model No.

T-switch						
Axial lead wire	Radial lead wire	Contact	Voltage AC	Voltage DC	Indicator	Lead wire
TOH*	TOV*	Reed	●	●	1-color LED	2-wire
T5H*	T5V*	Reed	●	●	No indicator lamp	2-wire
T8H*	T8V*	Reed	●	●	1-color LED	2-wire
T1H*	T1V*	Proximity	●		1-color LED	2-wire
T2H*	T2V*	Proximity		●	1-color LED	2-wire
T3H*	T3V*	Proximity		●	1-color LED	3-wire
T3PH*	T3PV*	Proximity		●	1-color LED	3-wire
T2WH*	T2WV*	Proximity		●	2-color LED	2-wire
T2YH*	T2YV*	Proximity		●	2-color LED	2-wire
T3WH*	T3WV*	Proximity		●	2-color LED	3-wire
T3YH*	T3YV*	Proximity		●	2-color LED	3-wire
T2JH*	T2JV*	Proximity		●	Off-delay	2-wire

How to order switch

[T-switch]

● Switch body + mounting bracket set

CMA2 - T0H - 40

- 40 → Bore size (Item Ⓑ on page 210)
- T0H → Switch model No. (Item Ⓓ)

● Switch body only

SW - T0H

- T0H → Switch model No. (Item Ⓓ)

● Mounting bracket set

CMA2 - T - 40

- 40 → Bore size (Item Ⓑ on page 210)
- T → Mounting bracket

How to order mounting bracket

Bore size (mm) / Mounting bracket	ø20	ø30	ø40
Basic (00) *3	M1-00-20	M1-00-30	M1-00-30
Axial foot (LB/LS)	M1-LB-20	M1-LB-30	M1-LB-30
Flange (FA/FB)	M1-FA-20	M1-FA-30	M1-FA-30
Eye bracket (CA)	M1-CA-20	M1-CA-30	M1-CA-30
Clevis bracket (CB)	M1-CB-20	M1-CB-30	M1-CB-30
Trunnion (TA/TB)	M1-TA-20	M1-TA-30	M1-TA-40

*1 : The mounting bracket model numbers above include tightening nut, toothed washer and parallel pin set.
2 : For axial foot (two-sided), 2 sets of “MI-LB-” are required.
*3 : Mounting nut, toothed washer only. Although 1 set is included with the basic of the product (00), use this when needed.

Internal structure and parts list

●ø20

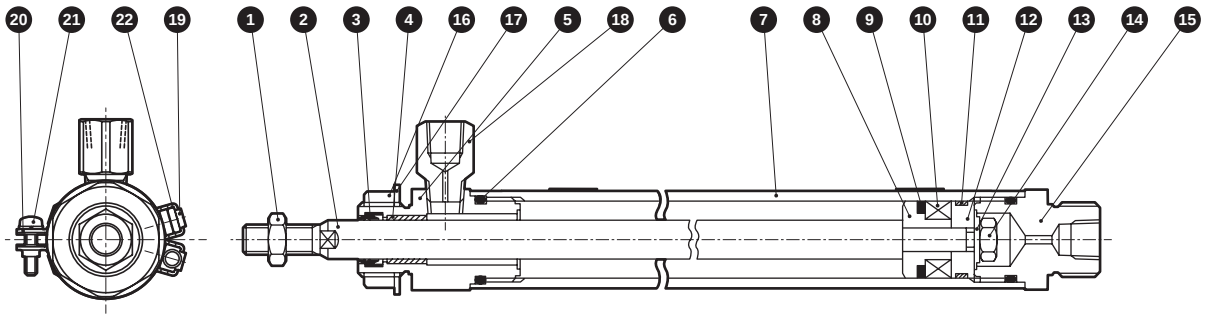

● ø30/ø40

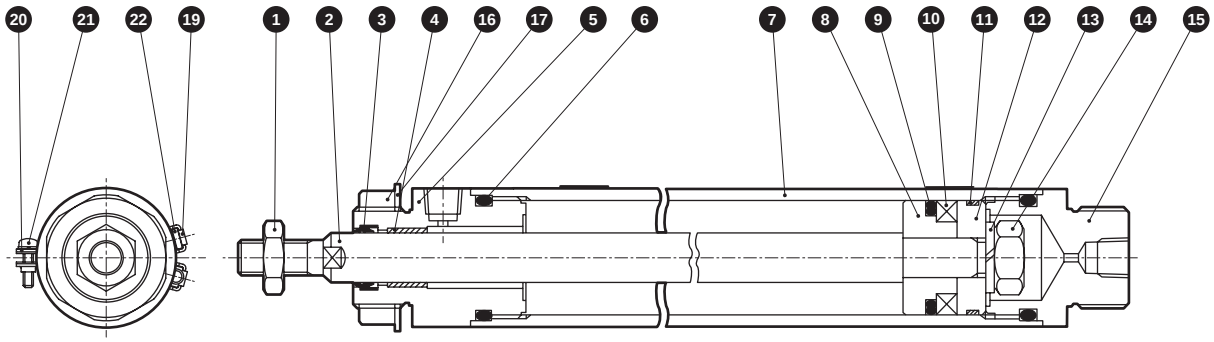

No.	Part name	Material	Remarks	No.	Part name	Material	Remarks
1	Rod nut	Steel	Zinc chromate	12	Piston B	Aluminum alloy	
2	Piston rod	ø20/ø30 Stainless steel ø40 Carbon steel	Industrial chrome plating	13	Spring washer	Steel	Zinc chromate
				14	Hexagon nut	Steel	Zinc chromate
3	Rod packing	Nitrile rubber		15	Head cover	Aluminum alloy	Chromate
4	Bush	Dry bearing	*1	16	Nut	Steel	Zinc chromate
5	Rod cover	Aluminum alloy	Chromate	17	Toothed washer	Steel	Zinc chromate
6	Cylinder gasket	Nitrile rubber		18	Port nipple	Copper alloy	*2
7	Cylinder tube	Aluminum alloy	Hard alumite	With switch			
8	Piston A	Aluminum alloy		19	Switch body		
9	Piston packing	Nitrile rubber		20	Band	Stainless steel	
10	Magnet	Plastic		21	Pan head machine screw	Stainless steel	
11	Wear ring	Polyacetal resin		22	Switch rail	Stainless steel	

*1 : Oleoresin bearing for copper and PTFE free.
*2 : The copper alloy port nipple of copper and PTFE free is nickel plated.

Repair parts list

Bore size (mm)	Kit No.	Repair parts No.
ø20	CMA2-20K	③ ⑥ ⑨ ⑪
ø30	CMA2-30K	
ø40	CMA2-40K	

Material of mounting bracket

Mounting	Material
LB/LS	Steel
FA/FB	Steel
TA/TB	Steel
CA/CB	Steel

● Note: Mounting bracket will be shipped with the product.
However, if the product is supplied with bellows and the mounting bracket is LB, FA, or TA, it will be attached to the product.

dimensions

● Basic (00)

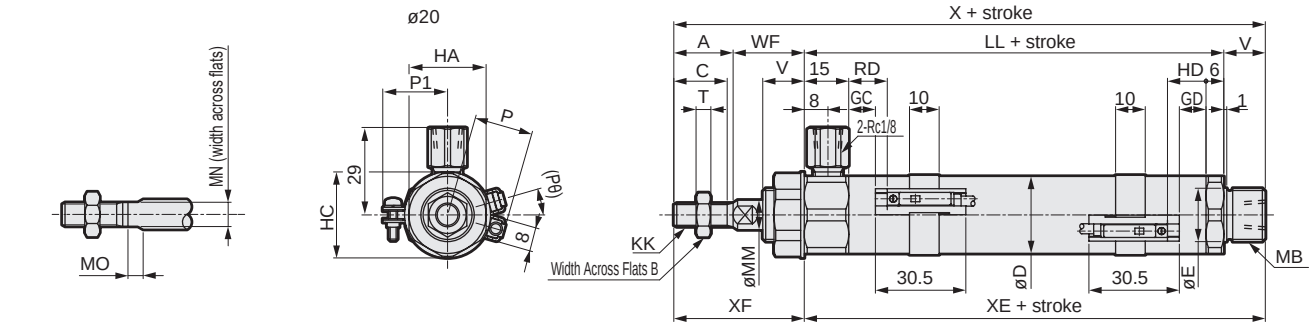

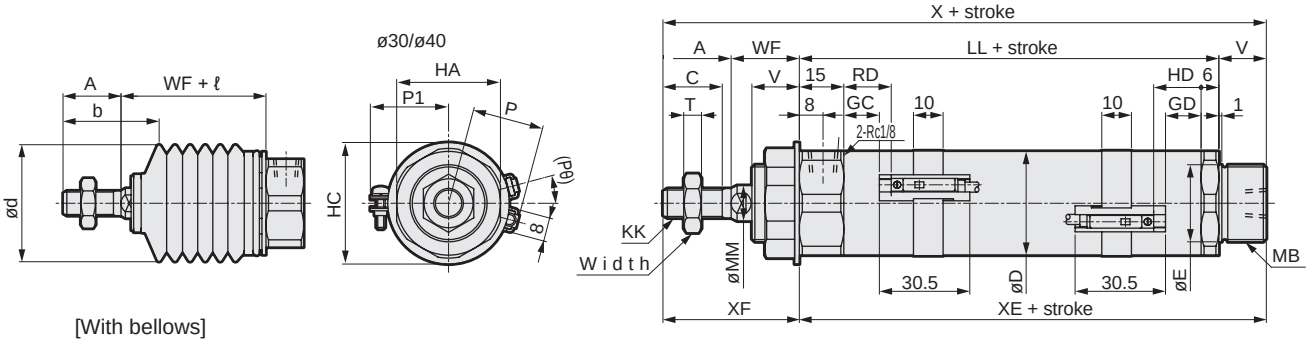

[With bellows]

*1: A port nipple is included with the rod cover of ø20.
*2: For the ℓ dimension, round up below the decimal point.
***3: Refer to page 220 for HD, RD, and protruding dimensions of T1*, T8* and 2-color LED switches.**
***4: For the dimensions of the accessories, refer to page 221.**

RD: Rod side max. sensitivity position
HD: Head side max. sensitivity position

Code	Basic (00) Basic dimensions																		
Bore size (mm)	A	B	C	D	E	HA	HC	KK	LL	MB	MN	MO	MM	T	V	WF	X	XE	XF
ø20	20	13	18	25	18	26	29	M 8 x 1	66	M 18 x 1.5	8	5	10	5	14	24	124	80	44
ø30	23	17	20	35	26	35	41	M 10 x 1.25	72	M 26 x 1.5	10	5	12	6	16	23	134	88	46
ø40	25	19	22	45	26	35	41	M 12 x 1.5	74	M 26 x 1.5	12	6	14	7	16	23	138	90	48

Code	With switch											With bellows				
	T0,T5,T2,T3				T2W,T3W				P	P1	(Pθ)°	A	WF	b	d	ℓ
Bore size (mm)	GC	GD	RD	HD	GC	GD	RD	HD								
ø20	9	9	13	13	11	11	15	15	19.5	21	19	20	24	32	30	(stroke/3) + 6
ø30	12	12	16	16	14	14	18	18	24.5	26	15	23	23	38	46	(stroke/3.25) + 7
ø40	13	13	17	17	15	15	19	19	29.5	31	12	25	23	40	46	(stroke/3.25) + 7

SCP*3
CMK2
CMA2
SCM
SCG
SCA2
SCS2
CKV2
CAV2/ COVP/N2
SSD2
SSG
SSD
CAT
MDC2
MVC
SMG
MSD/ MSDG
FC*
STK
SRL3
SRG3
SRM3
SRT3
MRL2
MRG2
SM-25
ShkAbs
FJ
FK
Spd Contr
Ending

Dimensions

● Axial foot (LB)

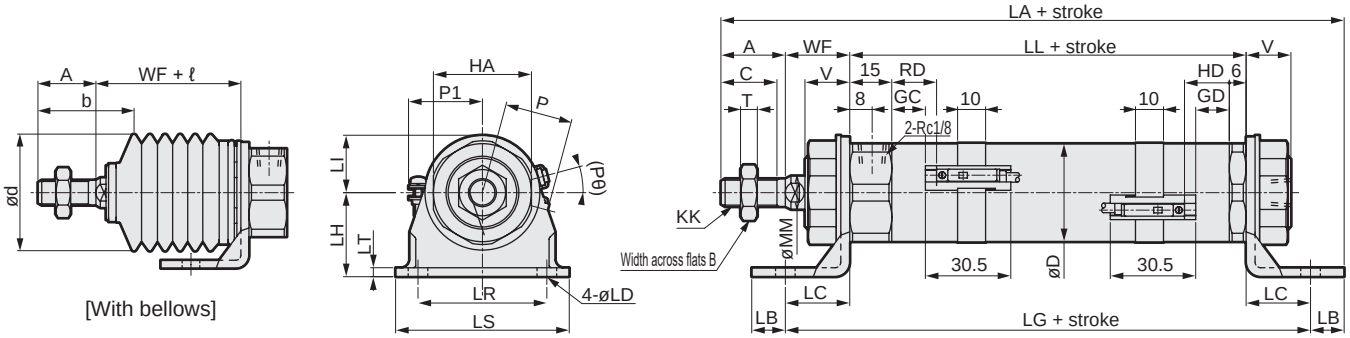

*1 : For the width across flats of the rod, refer to the dimensions of the basic (00).
*2 : A port nipple is included with the rod cover of ø20.
*3 : For the ℓ dimension, round up below the decimal point.
4 : Refer to page 220 for HD, RD, and protruding dimensions of T1, T8* and 2-color LED switches.
*5 : For the dimensions of the accessories, refer to page 221.

Code	Axial foot LB basic dimensions											Mounting dimensions									
Bore size (mm)	A	B	C	D	HA	KK	LL	MM	T	V	WF	LA	LB	LC	LD	LG	LH	LI	LR	LS	LT
ø20	20	13	18	25	26	M8x1	66	10	5	14	24	138	10	18	6	102	25	15	30	44	3.2
ø30	23	17	20	35	35	M10x1.25	72	12	6	16	23	153	12	23	7	118	30	20	46	62	3.2
ø40	25	19	22	45	35	M12x1.5	74	14	7	16	23	157	12	23	7	120	30	20	46	62	3.2

Code	With switch											With bellows					
	T0, T5, T2, T3				T2W, T3W				P	P1	(Pθ)°	A	WF	b	d	ℓ	
Bore size (mm)	GC	GD	RD	HD	GC	GD	RD	HD									
ø20	9	9	13	13	11	11	15	15	19.5	21	19	20	24	32	30	(Stroke/3) + 6	
ø30	12	12	16	16	14	14	18	18	24.5	26	15	23	23	38	46	(Stroke/3.25) + 7	
ø40	13	13	17	17	15	15	19	19	29.5	31	12	25	23	40	46	(Stroke/3.25) + 7	

● Axial foot (single) (LS)

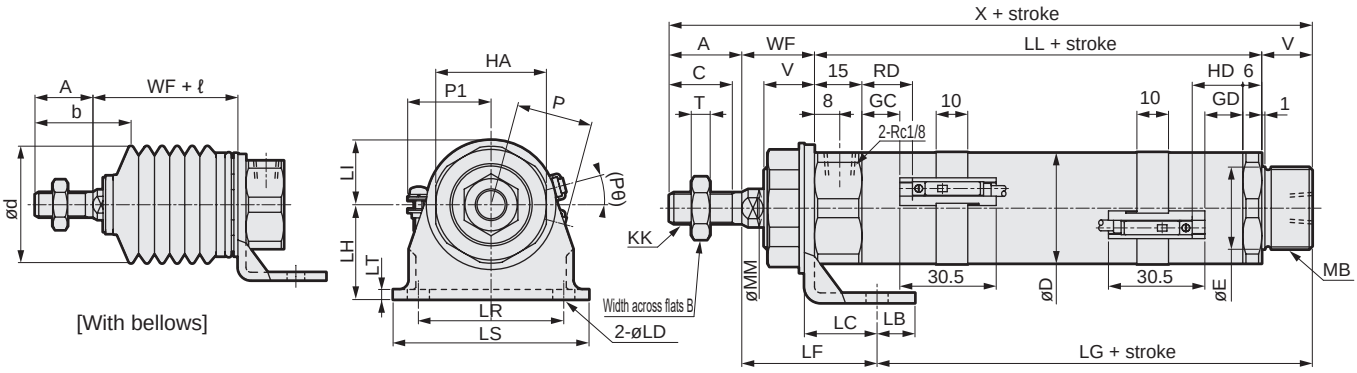

*1 : Max. stroke: 50.
*2 : For the width across flats of the rod, refer to the dimensions of the basic (00).
*3 : A port nipple is included with the rod cover of ø20.
*4 : For the ℓ dimension, round up below the decimal point.
5 : Refer to page 220 for HD, RD, and protruding dimensions of T1, T8* and 2-color LED switches.
*6 : For the dimensions of the accessories, refer to page 221.

Code	Axial foot (one side) (LS) Basic dimensions														Mounting dimensions					
Bore size (mm)	A	B	C	D	E	HA	KK	LL	MB	MM	T	V	WF	X	LB	LC	LD	LF	LG	LH
ø20	20	13	18	25	18	26	M8x1	66	M18x1.5	10	5	14	24	124	10	18	6	38.8	65.2	25
ø30	23	17	20	35	26	35	M10x1.25	72	M26x1.5	12	6	16	23	134	12	23	7	42.8	68.2	30
ø40	25	19	22	45	26	35	M12x1.5	74	M26x1.5	14	7	16	23	138	12	23	7	42.8	70.2	30

Code					With switch											With bellows				
					T0, T5, T2, T3				T2W, T3W				P	P1	(Pθ)°	A	WF	b	d	ℓ
Bore size (mm)	LI	LR	LS	LT	GC	GD	RD	HD	GC	GD	RD	HD								
ø20	15	30	44	3.2	9	9	13	13	11	11	15	15	19.5	21	19	20	24	32	30	(Stroke/3) + 6
ø30	20	46	62	3.2	12	12	16	16	14	14	18	18	24.5	26	15	23	23	38	46	(Stroke/3.25) + 7
ø40	20	46	62	3.2	13	13	17	17	15	15	19	19	29.5	31	12	25	23	40	46	(Stroke/3.25) + 7

Dimensions

● Rod side flange (FA)

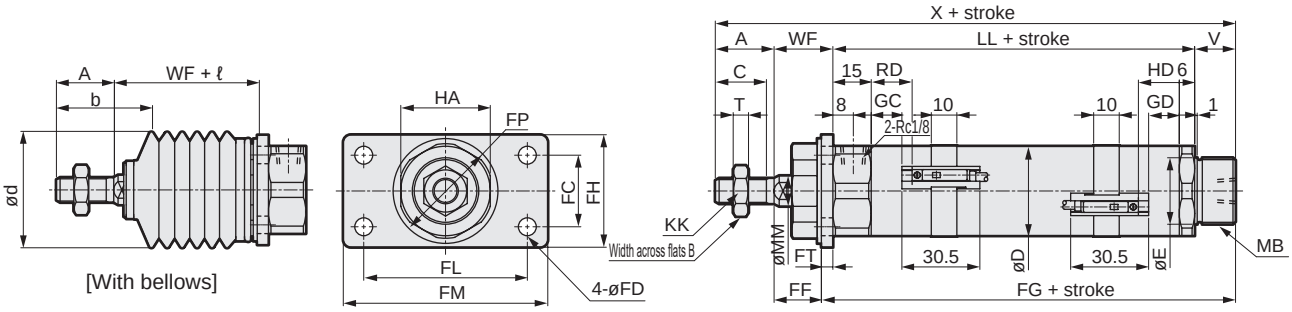

*1 : For the width across flats of the rod, refer to the dimensions of the basic (00).
*2 : A port nipple is included with the rod cover of ø20.
*3 : For the ℓ dimension, round up below the decimal point.
4 : Refer to page 220 for HD, RD, and protruding dimensions of T1, T8* and 2-color LED switches.
*5 : For the dimensions of the accessories, refer to page 221.

Code	Rod side flange (FA) Basic dimensions														Mounting dimensions				
Bore size (mm)	A	B	C	D	E	HA	KK	LL	MB	MM	T	V	WF	X	FC	FD	FF	FG	FH
ø20	20	13	18	25	18	26	M8x1	66	M18x1.5	10	5	14	24	124	20	6	20.8	83.2	34
ø30	23	17	20	35	26	35	M10x1.25	72	M26x1.5	12	6	16	23	134	28	7	18.5	92.5	44
ø40	25	19	22	45	26	35	M12x1.5	74	M26x1.5	14	7	16	23	138	28	7	18.5	94.5	44

Code					With switch								With bellows				
					T0, T5, T2, T3				T2W, T3W								
Bore size (mm)	FL	FM	FP	FT	GC	GD	RD	HD	GC	GD	RD	HD	A	WF	b	d	ℓ
ø20	40	54	29	3.2	9	9	13	13	11	11	15	15	20	24	32	30	(Stroke/3) + 6
ø30	64	80	41	4.5	12	12	16	16	14	14	18	18	23	23	38	46	(Stroke/3.25) + 7
ø40	64	80	41	4.5	13	13	17	17	15	15	19	19	25	23	40	46	(Stroke/3.25) + 7

● Head side flange (FB)

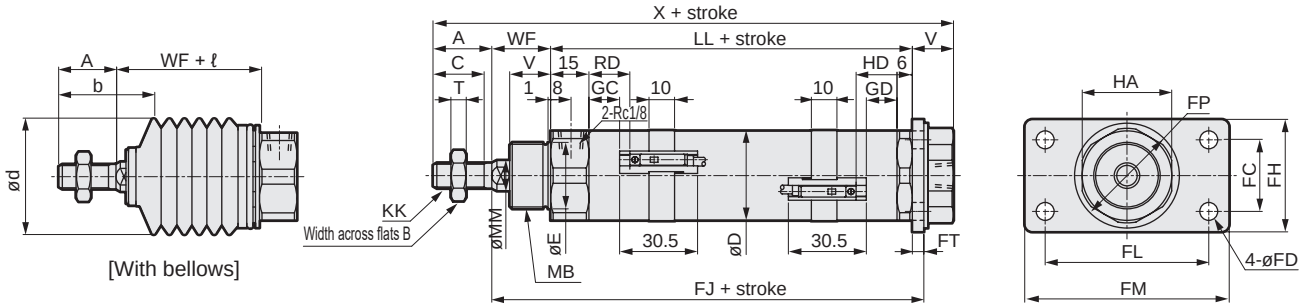

*1 : For the width across flats of the rod, refer to the dimensions of the basic (00).
*2 : A port nipple is included with the rod cover of ø20.
*3 : For the ℓ dimension, round up below the decimal point.
4 : Refer to page 220 for HD, RD, and protruding dimensions of T1, T8* and 2-color LED switches.
*5 : For the dimensions of the accessories, refer to page 221.

Code	Head side flange (FB) Basic dimensions														Mounting dimensions				
Bore size (mm)	A	B	C	D	E	HA	KK	LL	MB	MM	T	V	WF	X	FC	FD	FH	FJ	FL
ø20	20	13	18	25	18	26	M8x1	66	M18x1.5	10	5	14	24	124	20	6	34	93.2	40
ø30	23	17	20	35	26	35	M10x1.25	72	M26x1.5	12	6	16	23	134	28	7	44	99.5	64
ø40	25	19	22	45	26	35	M12x1.5	74	M26x1.5	14	7	16	23	138	28	7	44	101.5	64

Code				With switch								With bellows					
				T0, T5, T2, T3				T2W, T3W									
Bore size (mm)	FM	FP	FT	GC	GD	RD	HD	GC	GD	RD	HD	A	WF	b	d	ℓ	
ø20	54	29	3.2	9	9	13	13	11	11	15	15	20	24	32	30	(Stroke/3) + 6	
ø30	80	41	4.5	12	12	16	16	14	14	18	18	23	23	38	46	(Stroke/3.25) + 7	
ø40	80	41	4.5	13	13	17	17	15	15	19	19	25	23	40	46	(Stroke/3.25) + 7	

Dimensions

● Rod side trunnion (TA)

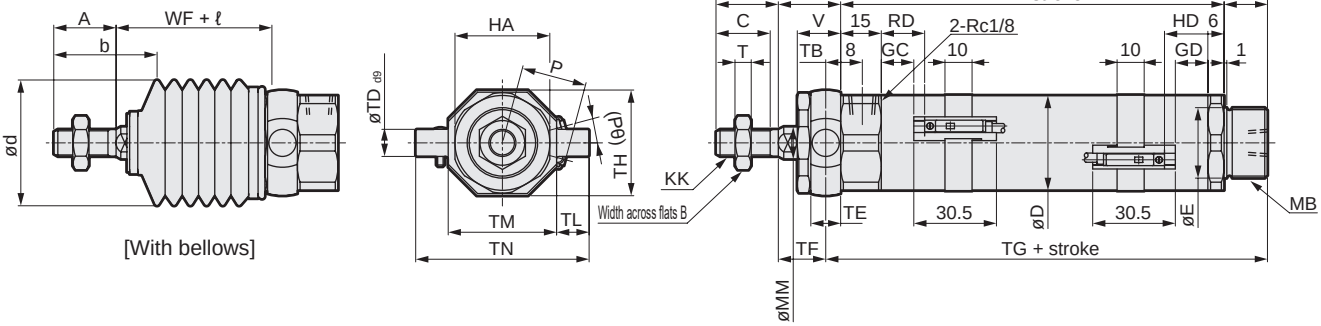

*1 : For the width across flats of the rod, refer to the dimensions of the basic (00).
*2 : A port nipple is included with the rod cover of ø20.
*3 : For the ℓ dimension, round up below the decimal point.
4 : Refer to page 220 for HD, RD, and protruding dimensions of T1, T8* and 2-color LED switches.
*5 : For the dimensions of the accessories, refer to page 221.

Code	Rod side trunnion (TA) Basic dimensions														Mounting dimensions					
Bore size (mm)	A	B	C	D	E	HA	KK	LL	MB	MM	T	V	WF	X	TB	TD	TE	TF	TG	TH
ø20	20	13	18	25	18	26	M8x1.0	66	M18x1.5	10	5	14	24	124	4.5	8	9	19.5	84.5	29.5
ø30	23	17	20	35	26	35	M10x1.25	72	M26x1.5	12	6	16	23	134	5.5	10	11	17.5	93.5	39
ø40	25	19	22	45	26	35	M12x1.5	74	M26x1.5	14	7	16	23	138	5.5	10	11	17.5	95.5	44

Code				With switch										With bellows				
				T0, T5, T2, T3				T2W, T3W										
Bore size (mm)	TL	TM	TN	GC	GD	RD	HD	GC	GD	RD	HD	P	(Pθ)°	A	WF	b	d	ℓ
ø20	8	30	46	9	9	13	13	11	11	15	15	19.5	19	20	24	32	30	(Stroke/3) + 6
ø30	12	40	64	12	12	16	16	14	14	18	18	24.5	15	23	23	38	46	(Stroke/3.25) + 7
ø40	9.5	53	72	13	13	17	17	15	15	19	19	29.5	12	25	23	40	46	(Stroke/3.25) + 7

● Rod side trunnion (TA) with bracket (option code B2)

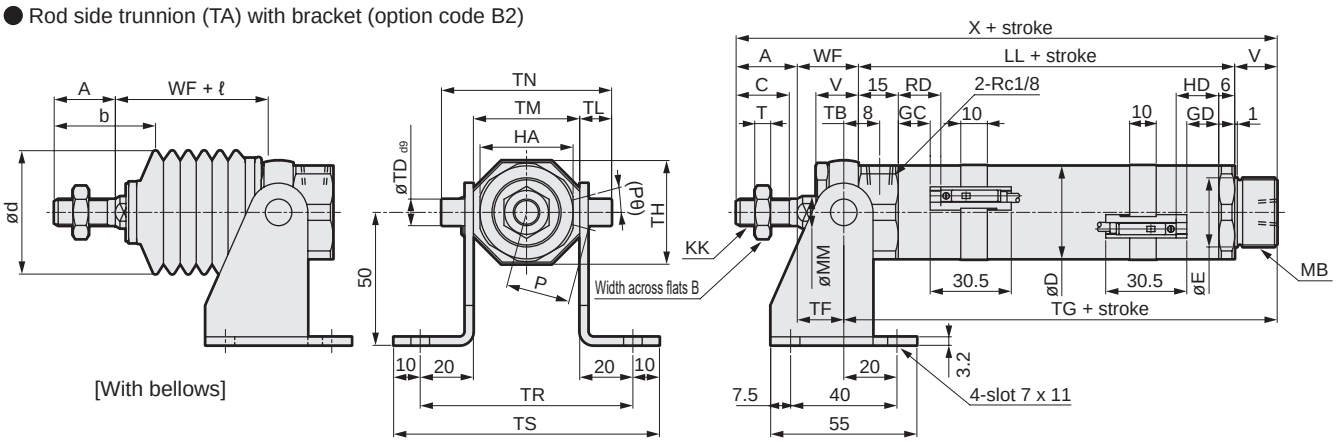

*1 : For the width across flats of the rod, refer to the dimensions of the basic (00).
*2 : A port nipple is included with the rod cover of ø20.
*3 : For the ℓ dimension, round up below the decimal point.
4 : Refer to page 220 for HD, RD, and protruding dimensions of T1, T8* and 2-color LED switches.
*5 : For the dimensions of the accessories, refer to page 221.

Code	Rod side trunnion (TA) with bracket (option code B2) Basic dimensions													Mounting dimensions					
Bore size (mm)	A	B	C	D	HA	KK	LL	MB	MM	T	V	WF	X	TB	TD	TF	TG	TH	TL
ø20	20	13	18	25	26	M8x1.0	66	M18x1.5	10	5	14	24	124	4.5	8	19.5	84.5	29.5	8
ø30	23	17	20	35	35	M10x1.25	72	M26x1.5	12	6	16	23	134	5.5	10	17.5	93.5	39	12
ø40	25	19	22	45	35	M12x1.5	74	M26x1.5	14	7	16	23	138	5.5	10	17.5	95.5	44	9.5

Code					With switch										With bellows				
					T0, T5, T2, T3				T2W, T3W										
Bore size (mm)	TM	TN	TR	TS	GC	GD	RD	HD	GC	GD	RD	HD	P	(Pθ)°	A	WF	b	d	ℓ
ø20	30	46	70	90	9	9	13	13	11	11	15	15	19.5	19	20	24	32	30	(Stroke/3) + 6
ø30	40	64	80	100	12	12	16	16	14	14	18	18	24.5	15	23	23	38	46	(Stroke/3.25) + 7
ø40	53	72	93	113	13	13	17	17	15	15	19	19	29.5	12	25	23	40	46	(Stroke/3.25) + 7

Dimensions

● Head side trunnion (TB)

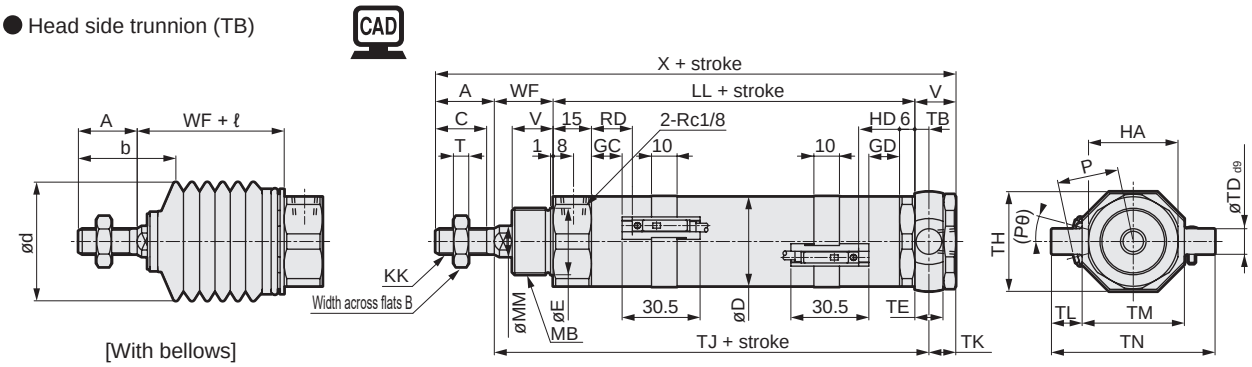

*1 : For the width across flats of the rod, refer to the dimensions of the basic (00).
*2 : A port nipple is included with the rod cover of ø20.
*3 : For the ℓ dimension, round up below the decimal point.
4 : Refer to page 220 for HD, RD, and protruding dimensions of T1, T8* and 2-color LED switches.
*5 : For the dimensions of the accessories, refer to page 221.

Code	Head side trunnion (TB) Basic dimensions														Mounting dimensions				
Bore size (mm)	A	B	C	D	E	HA	KK	LL	MB	MM	T	V	WF	X	TB	TD	TE	TH	TJ
ø20	20	13	18	25	18	26	M8x1.0	66	M18x1.5	10	5	14	24	124	4.5	8	9	29.5	94.5
ø30	23	17	20	35	26	35	M10x1.25	72	M26x1.5	12	6	16	23	134	5.5	10	11	39	100.5
ø40	25	19	22	45	26	35	M12x1.5	74	M26x1.5	14	7	16	23	138	5.5	10	11	44	102.5

Code					With switch										With bellows				
					T0, T5, T2, T3				T2W, T3W										
Bore size (mm)	TK	TL	TM	TN	GC	GD	RD	HD	GC	GD	RD	HD	P	(Pθ)°	A	WF	b	d	ℓ
ø20	9.5	8	30	46	9	9	13	13	11	11	15	15	19.5	19	20	24	32	30	(Stroke/3) + 6
ø30	10.5	12	40	64	12	12	16	16	14	14	18	18	24.5	15	23	23	38	46	(Stroke/3.25) + 7
ø40	10.5	9.5	53	72	13	13	17	17	15	15	19	19	29.5	12	25	23	40	46	(Stroke/3.25) + 7

● Head side trunnion (TB) with bracket (option code B2)

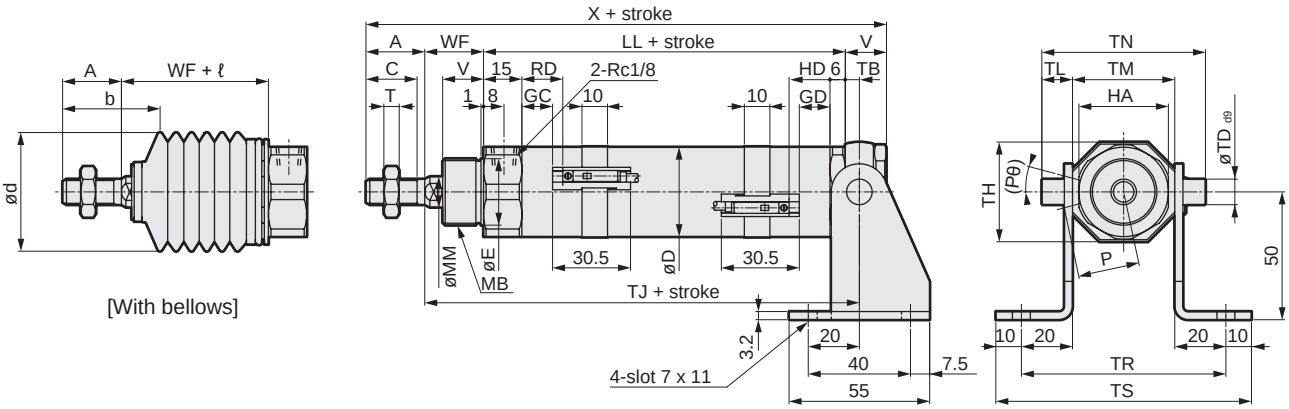

*1 : For the width across flats of the rod, refer to the dimensions of the basic (00).
*2 : A port nipple is included with the rod cover of ø20.
*3 : For the ℓ dimension, round up below the decimal point.
4 : Refer to page 220 for HD, RD, and protruding dimensions of T1, T8* and 2-color LED switches.
*5 : For the dimensions of the accessories, refer to page 221.

Code	Head side trunnion (TB) with bracket (option code B2) Basic dimensions													Mounting dimensions					
Bore size (mm)	A	B	C	D	HA	KK	LL	MB	MM	T	V	WF	X	TB	TD	TH	TJ	TL	TM
ø20	20	13	18	25	26	M8x1.0	66	M18x1.5	10	5	14	24	124	4.5	8	29.5	94.5	8	30
ø30	23	17	20	35	35	M10x1.25	72	M26x1.5	12	6	16	23	134	5.5	10	39	100.5	12	40
ø40	25	19	22	45	35	M12x1.5	74	M26x1.5	14	7	16	23	138	5.5	10	44	102.5	9.5	53

Code				With switch										With bellows				
				T0, T5, T2, T3				T2W, T3W										
Bore size (mm)	TN	TR	TS	GC	GD	RD	HD	GC	GD	RD	HD	P	(Pθ)°	A	WF	b	d	ℓ
ø20	46	70	90	9	9	13	13	11	11	15	15	19.5	19	20	24	32	30	(Stroke/3) + 6
ø30	64	80	100	12	12	16	16	14	14	18	18	24.5	15	23	23	38	46	(Stroke/3.25) + 7
ø40	72	93	113	13	13	17	17	15	15	19	19	29.5	12	25	23	40	46	(Stroke/3.25) + 7

Dimensions

● Eye bracket (CA)

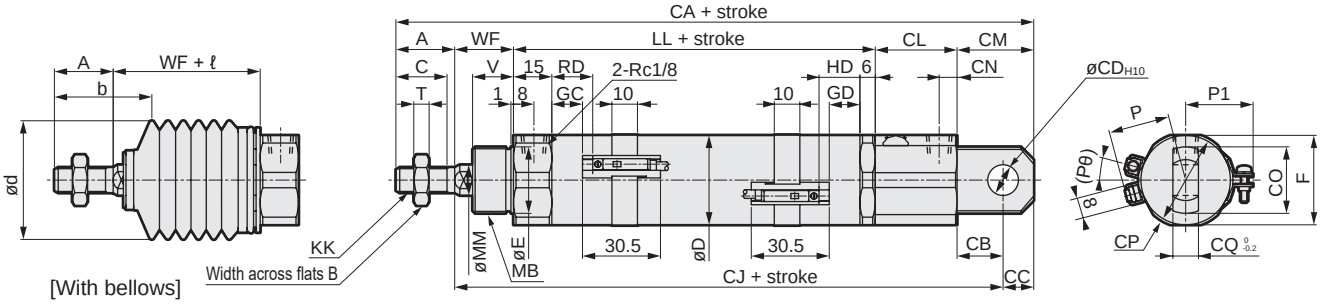

*1 : For the width across flats of the rod, refer to the dimensions of the basic (00).
*2 : A port nipple is included with the rod cover of ø20.
*3 : For the ℓ dimension, round up below the decimal point.
4 : Refer to page 220 for HD, RD, and protruding dimensions of T1, T8* and 2-color LED switches.
*5 : For the dimensions of the accessories, refer to page 221.

Code	Eye bracket (CA) Basic dimensions													Mounting dimensions							
Bore size (mm)	A	B	C	D	E	F	KK	LL	MB	MM	T	V	WF	CA	CB	CC	CD	CJ	CL	CM	CN
ø20	20	13	18	25	18	26	M8x1.0	66	M18x1.5	10	5	14	24	165	14	10	10	135	31	24	8
ø30	23	17	20	35	26	35	M10x1.25	72	M26x1.5	12	6	16	23	180	18	12	12	145	32	30	7
ø40	25	19	22	45	26	35	M12x1.5	74	M26x1.5	14	7	16	23	184	18	12	12	147	32	30	7

Code				With switch											With bellows				
				T0, T5, T2, T3				T2W, T3W											
Bore size (mm)	CO	CP	CQ	GC	GD	RD	HD	GC	GD	RD	HD	P	P1	(Pθ)°	A	WF	b	d	ℓ
ø20	22	28	8	9	9	13	13	11	11	15	15	19.5	21	19	20	24	32	30	(Stroke/3) + 6
ø30	26	37	10	12	12	16	16	14	14	18	18	24.5	26	15	23	23	38	46	(Stroke/3.25) + 7
ø40	26	37	10	13	13	17	17	15	15	19	19	29.5	31	12	25	23	40	46	(Stroke/3.25) + 7

● Eye bracket (CA) with bracket (option code B2)

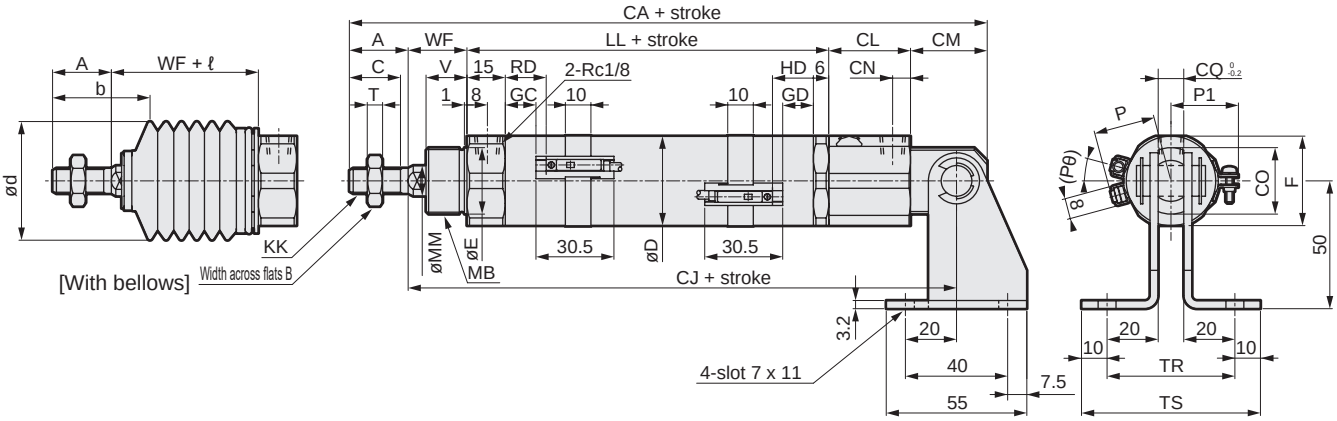

*1 : For the width across flats of the rod, refer to the dimensions of the basic (00).
*2 : A port nipple is included with the rod cover of ø20.
*3 : For the ℓ dimension, round up below the decimal point.
4 : Refer to page 220 for HD, RD, and protruding dimensions of T1, T8* and 2-color LED switches.
*5 : For the dimensions of the accessories, refer to page 221.

Code	Eye bracket (CA) with bracket (option code B2) Basic dimensions												Mounting dimensions						
Bore size (mm)	A	B	C	D	F	KK	LL	MB	MM	T	V	WF	CA	CJ	CL	CM	CN	CO	CQ
ø20	20	13	18	25	26	M8x1.0	66	M18x1.5	10	5	14	24	165	135	31	24	8	22	8
ø30	23	17	20	35	35	M10x1.25	72	M26x1.5	12	6	16	23	180	145	32	30	7	26	10
ø40	25	19	22	45	35	M12x1.5	74	M26x1.5	14	7	16	23	184	147	32	30	7	26	10

Code			With switch											With bellows				
			T0, T5, T2, T3				T2W, T3W											
Bore size (mm)	TR	TS	GC	GD	RD	HD	GC	GD	RD	HD	P	P1	(Pθ)°	A	WF	b	d	ℓ
ø20	48	68	9	9	13	13	11	11	15	15	19.5	21	19	20	24	32	30	(Stroke/3) + 6
ø30	50	70	12	12	16	16	14	14	18	18	24.5	26	15	23	23	38	46	(Stroke/3.25) + 7
ø40	50	70	13	13	17	17	15	15	19	19	29.5	31	12	25	23	40	46	(Stroke/3.25) + 7

Dimensions

● Clevis bracket (CB)

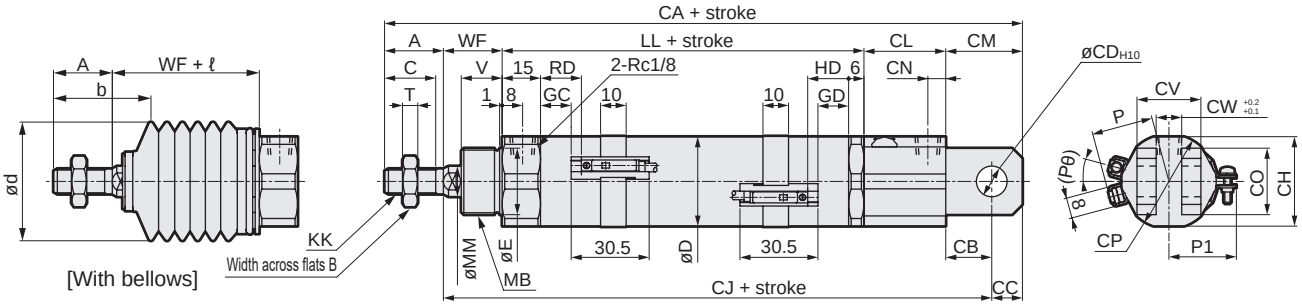

*1 : For the width across flats of the rod, refer to the dimensions of the basic (00).
*2 : A port nipple is included with the rod cover of ø20.
*3 : For the ℓ dimension, round up below the decimal point.
4 : Refer to page 220 for HD, RD, and protruding dimensions of T1, T8* and 2-color LED switches.
*5 : For the dimensions of the accessories, refer to page 221.

Code	Clevis bracket (CB) Basic dimensions												Mounting dimensions								
Bore size (mm)	A	B	C	D	E	KK	LL	MB	MM	T	V	WF	CA	CB	CC	CD	CH	CJ	CL	CM	CN
ø20	20	13	18	25	18	M8x1.0	66	M18x1.5	10	5	14	24	165	14	10	10	26	135	31	24	8
ø30	23	17	20	35	26	M10x1.25	72	M26x1.5	12	6	16	23	180	18	12	12	35	145	32	30	7
ø40	25	19	22	45	26	M12x1.5	74	M26x1.5	14	7	16	23	184	18	12	12	35	147	32	30	7

Code					With switch											With bellows				
					T0, T5, T2, T3				T2W, T3W											
Bore size (mm)	CO	CP	CV	CW	GC	GD	RD	HD	GC	GD	RD	HD	P	P1	(Pθ)°	A	WF	b	d	ℓ
ø20	22	28	19	8	9	9	13	13	11	11	15	15	19.5	21	19	20	24	32	30	(Stroke/3) + 6
ø30	26	37	25	10	12	12	16	16	14	14	18	18	24.5	26	15	23	23	38	46	(Stroke/3.25) + 7
ø40	26	37	25	10	13	13	17	17	15	15	19	19	29.5	31	12	25	23	40	46	(Stroke/3.25) + 7

● Same port position (P)

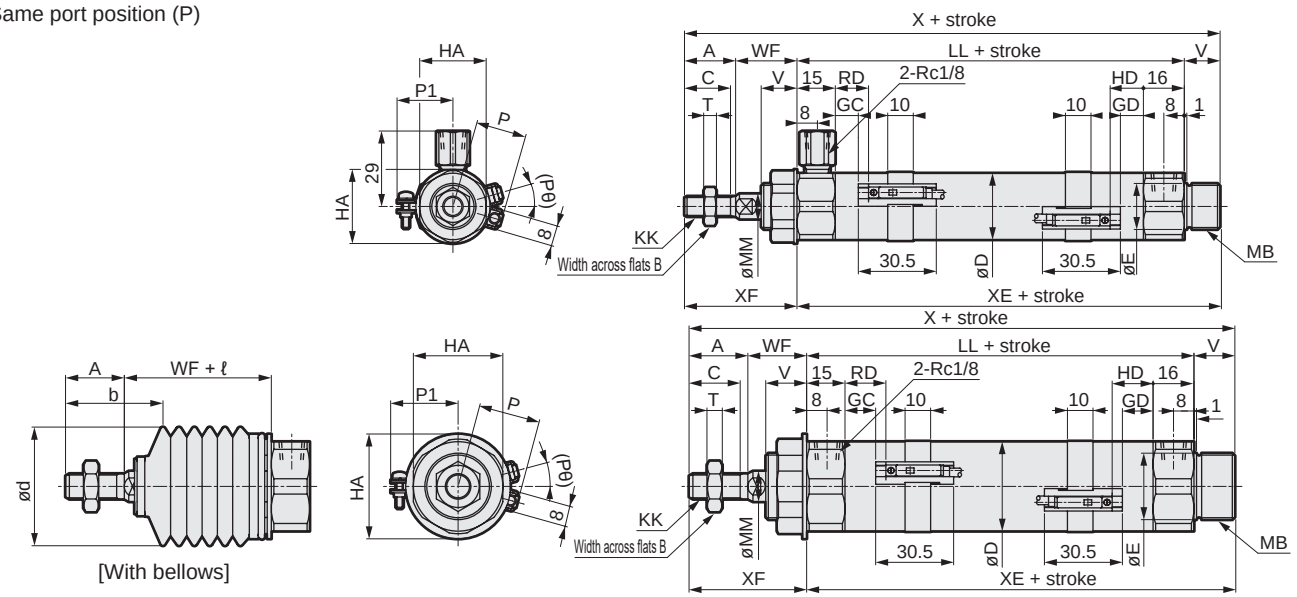

*1 : A port nipple is included with the rod cover of ø20.
*2 : For the width across flats of the rod, refer to the dimensions of the basic (00).
*3 : For the ℓ dimension, round up below the decimal point.
4 : Refer to page 220 for HD, RD, and protruding dimensions of T1, T8* and 2-color LED switches.
*5 : For the dimensions of the accessories, refer to page 221.

Code	Basic (00) Basic dimensions																
Bore size (mm)	A	B	C	D	E	HA	HC	KK	LL	MB	MM	T	V	WF	X	XE	XF
ø20	20	13	18	25	18	26	29	M8x1.0	76	M18x1.5	10	5	14	24	134	90	44
ø30	23	17	20	35	26	35	41	M10x1.25	82	M26x1.5	12	6	16	23	144	98	46
ø40	25	19	22	45	26	35	41	M12x1.5	84	M26x1.5	14	7	16	23	148	100	48

Code	With switch											With bellows				
	T0, T5, T2, T3				T2W, T3W											
Bore size (mm)	GC	GD	RD	HD	GC	GD	RD	HD	P	P1	(Pθ)°	A	WF	b	d	ℓ
ø20	9	9	13	13	11	11	15	15	19.5	21	19	20	24	32	30	(Stroke/3) + 6
ø30	12	12	16	16	14	14	18	18	24.5	26	15	23	23	38	46	(Stroke/3.25) + 7
ø40	13	13	17	17	15	15	19	19	29.5	31	12	25	23	40	46	(Stroke/3.25) + 7

SCP*3
CMK2
CMA2
SCM
SCG
SCA2
SCS2
CKV2
CAV2/COVP/N2
SSD2
SSG
SSD
CAT
MDC2
MVC
SMG
MSD/MSDG
FC*
STK
SRL3
SRG3
SRM3
SRT3
MRL2
MRG2
SM-25
ShkAbs
FJ
FK
Spd Contr
Ending

CMA2 Series common dimensions (2-color LED, off-delay, with T1* and T8* switches)

● CMA2-20 to 40 (2-color LED, off-delay, T1* switch: T2YH/V, T3YH/V, T2JH/V, T1H/V)

· Stroke of less than 33 mm

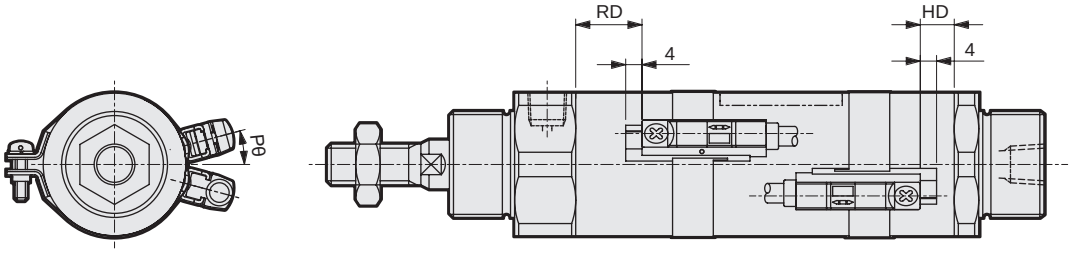

· Stroke of 33 mm and over

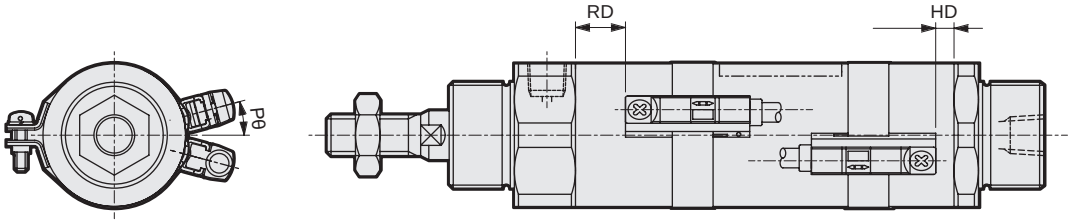

Mounting dimensions of 2-color LED, off-delay and T1* switch

Code / Bore size (mm)	RD	HD	(Pθ)°
ø20	12	12	9
ø30	15	15	15
ø40	16	16	12

● CMA2-20 to 40 (T8 switch: T8*H/V)

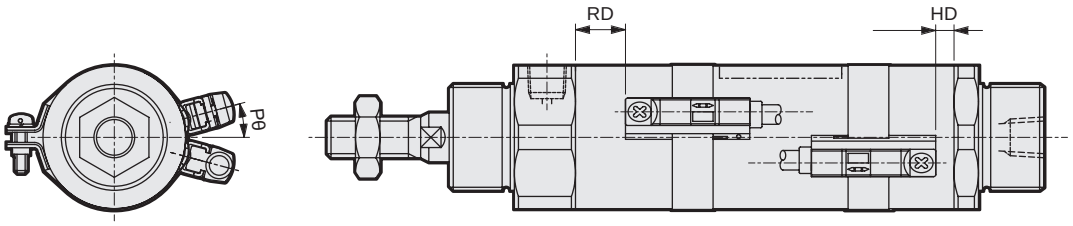

T8* Switch mounting dimensions

Code / Bore size (mm)	RD	HD	(Pθ)°
ø20	7	7	19
ø30	10	10	15
ø40	11	11	12

CMA2 Series common accessory dimensions

CAD

● Rod eye (I)

Material: Steel
Zinc chromate treatment

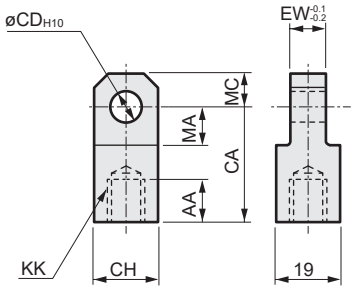

Model No.	Applicable bore size (mm)	AA	CA	CD	CH	EW	KK	MA	MC	Weight (g)
M1-I-20	20	14	30	10	19	8	M8x1.0	13	10	60
M1-I-30	30	14	36	12	25	10	M10x1.25	16	12	106
M1-I-40	40	14	36	12	25	10	M12x1.5	16	12	100

● Rod clevis (Y)

Material: Steel
Zinc chromate treatment

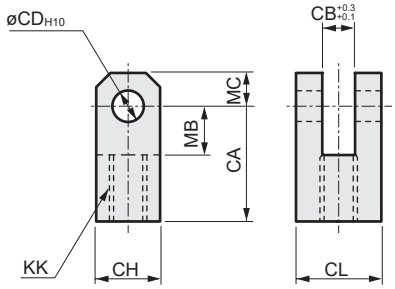

Note: A pin and washer are included.

Model No.	Applicable bore size (mm)	CA	CB	CD	CH	CL	KK	MB	MC	Weight (g)
M1-Y-20	20	30	8	10	19	19	M8x1.0	13	10	99
M1-Y-30	30	36	10	12	25	25	M10x1.25	16	12	197
M1-Y-40	40	36	10	12	25	25	M12x1.5	16	12	193

● Clevis bracket (B2)

Material: Steel
Zinc chromate treatment

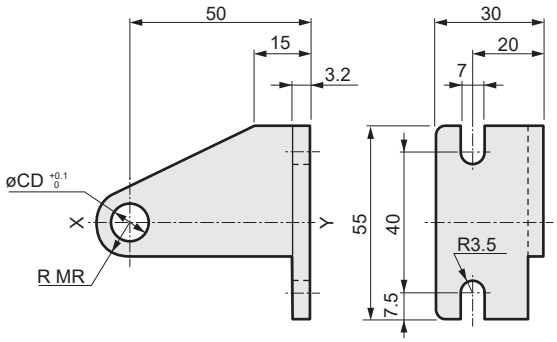

Model No.	Compatible model	Applicable bore size (mm)	CD	MR	Weight (g)
M1-B2-30-CA	CMA2-CA Clevis	20	10	11	158
M1-B2-40-CA		30/40	12	11	162
M1-B2-20-TA	CMA2-TA/TB Trunnion	20	8	8	132
M1-B2-30-TA		30/40	10	11	142

*1: One pair is composed of two pieces with XY symmetry.
*2: The model No. above includes snap ring and pin. (However, the pin and snap rings are not attached with the trunnion.)

● Rod clevis pin (P)

Material: Steel
Zinc chromate treatment

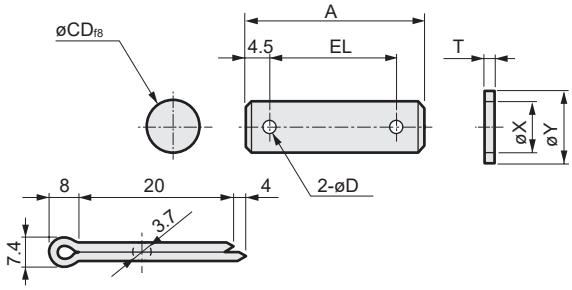

Model No.	Applicable bore size (mm)	A	D	CD	EL	T	X	Y	Weight (g)
M1-P-20	20	37	4	10	28	1.6	10.5	18	29
M1-P-30	30/40	46	4	12	37	2.5	12.5	22	50

Note: A pin and a washer for rod clevis use are included with the product.

● Clevis bracket pin (P2)

Material: Steel
Zinc chromate treatment

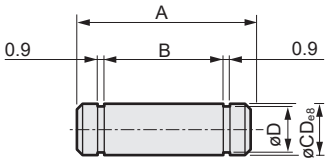

Model No.	Applicable bore size (mm)	A	B	CD	D	Applicable snap ring	Weight (g)
M1-P2-20	20	25	20	10	9	E9	16
M1-P2-30	30/40	27	22	12	9	E9	24

Note: A pin and snap ring for bracket use are included with the product.
(However, the pin and snap rings are not attached with the trunnion.)

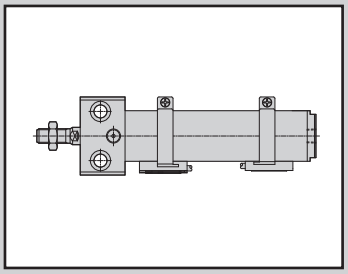

Medium bore size cylinder
Double acting/direct mounting

CMA2-E Series

● Bore size: ø20/ø30/ø40

JIS symbol ● Double acting cylinder single rod

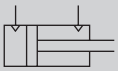

RoHS CAD

Specifications

Item	CMA2-E		
Bore size mm	ø20	ø30	ø40
Actuation	Double acting		
Working fluid	Compressed air		
Max. working pressure MPa	0.7 (≈100 psi, 7 bar)		
Min. working pressure MPa	0.1 (≈15 psi, 1 bar)		
Proof pressure MPa	1.0 (≈150 psi, 10 bar)		
Ambient temperature °C	-10 (14°F) to 60 (140°F) (no freezing)		
Port size	Rc1/8		
Stroke tolerance mm	$^{+1.0}_{0}$ (to 200), $^{+1.2}_{0}$ (to 700)		
Working piston speed mm/s	50 to 500		
Cushion	None		
Lubrication	Not required (use turbine oil class 1 ISO VG32 if necessary for lubrication)		
Allowable absorbed energy J	0.024	0.05	0.093

Stroke

Bore size (mm)	Standard stroke (mm)	Max. stroke (mm)	Min. stroke (mm)
ø20	25, 50, 75, 100, 150, 200, 250, 300	700	1
ø30			
ø40			

*1: The custom stroke is available in 1 mm increments.

Min. stroke with switch (T-switch)

Switch model No.	1	2	3
T0, T5, T2, T3	10	27	51
T2W, T3W	10	31	55
T2Y, T3Y, T1	10	25	49
T8	10	23	47

Switch specifications

● 1-color/2-color LED

Item	2-wire proximity	2-wire proximity			3-wire proximity				2-wire reed						
	T1H/T1V	T2H/T2V/ T2JH/T2JV	T2YH/ T2YV	T2WH/ T2WV	T3H/ T3V	T3PH/ T3PV	T3YH/ T3YV	T3WH/ T3WV	T0H/T0V		T5H/T5V		T8H/T8V		
Applications	For programming controller, relay, compact solenoid valve	Dedicated for programmable controller			For programmable controller, relay				For programmable controller, relay		For programmable controller, relay (no lamp), serial		For programmable controller, relay		
Output method	-				NPN output	PNP output	NPN output	NPN output	-						
Pwr. supp. V.	-				10 to 28 VDC				-						
Load voltage	85 to 265 VAC	10 to 30 VDC		24 VDC ±10%	30 VDC or less				12/24 VDC	100/110 VAC	5/12/24 VDC	100/110 VAC	12/24 VDC	110 VAC	220 VAC
Load current	5 to 100 mA	5 to 20 mA (*3)			100 mA or less		50 mA or less		5 to 50 mA	7 to 20 mA	50 mA or less	20 mA or less	5 to 50 mA	7 to 20 mA	7 to 10 mA
Indicator	LED (Lit when ON)	LED (Lit when ON)	Red/green LED (Lit when ON)	Red/green LED (Lit when ON)	LED (Lit when ON)	Yellow LED (Lit when ON)	Red/green LED (Lit when ON)	Red/green LED (Lit when ON)	LED (Lit when ON)		No indicator lamp		LED (Lit when ON)		
Leakage current	≤ 1 mA at 100 VAC, ≤ 2 mA at 200 VAC	1 mA or less			10 μA or less				0 mA						
Weight g	1 m:33 3 m:87 5 m:142	1 m:18 3 m:49 5 m:80	1 m:33 3 m:87 5 m :142	1 m:18 3 m:49 5 m:80	1 m:18 3 m:49 5 m:80		1 m:33 3 m:87 5 m :142	1 m:18 3 m:49 5 m:80	1 m:18 3 m:49 5 m:80				1 m :33 3 m :87 5 m :142		

*1: Refer to Ending Page 1 for detailed switch specifications and dimensions.
*2: Switches other than the above models, such as switches with connectors, are also available. Refer to Ending Page 1.
*3: The max. load current is 20 mA at 25°C. The current is lower than 20 mA if the operating ambient temperature around the switch is higher than 25˚C. (5 to 10 mA at 60°C)

Cylinder weight

(Unit: kg)

Item/mounting / Bore size (mm)	Product weight when stroke (S) = 0 mm: Side foot (LS)	Product weight when stroke (S) = 0 mm: Flange (FA)	Weight per switch T	Weight per switch T: Switch rail + band weight	Additional weight per S = 10 mm
ø20	0.18	0.16	Refer to the weight in the switch specifications.	0.005	0.01
ø30	0.36	0.31		0.005	0.014
ø40	0.61	0.51		0.009	0.02

(Example) Product weight of CMA2-E-FA-30-50-TOH-D
- Product weight when S = 0 mm..... 0.31kg
- Additional weight when S = 50 mm ..... Additional weight when S = 10 mm 0.014 x $\frac{\text{Product stroke (50)}}{10}$ = 0.07 kg
- Weight of 2 switches..... 0.036 kg
- Product weight..... 0.31kg + 0.07 kg +0.036 kg = 0.416kg

Theoretical thrust table

(Unit: N)

Bore size (mm)	Operating direction	Working pressure MPa 0.1	0.15	0.2	0.3	0.4	0.5	0.6	0.7
ø20	Push	31.4	47.1	62.8	94.2	1.26×10^2	1.57×10^2	1.88×10^2	2.20×10^2
	Pull	23.6	35.3	47.1	70.7	94.2	1.18×10^2	1.41×10^2	1.65×10^2
ø30	Push	70.7	1.06×10^2	1.41×10^2	2.12×10^2	2.83×10^2	3.53×10^2	4.24×10^2	4.95×10^2
	Pull	59.4	89.1	1.19×10^2	1.78×10^2	2.38×10^2	2.97×10^2	3.56×10^2	4.16×10^2
ø40	Push	1.26×10^2	1.88×10^2	2.51×10^2	3.77×10^2	5.03×10^2	6.28×10^2	7.54×10^2	8.80×10^2
	Pull	1.10×10^2	1.65×10^2	2.21×10^2	3.31×10^2	4.41×10^2	5.51×10^2	6.62×10^2	7.72×10^2

SCP*3
CMK2
CMA2
SCM
SCG
SCA2
SCS2
CKV2
CAV2/COVP/N2
SSD2
SSG
SSD
CAT
MDC2
MVC
SMG
MSD/MSDG
FC*
STK
SRL3
SRG3
SRM3
SRT3
MRL2
MRG2
SM-25
ShkAbs
FJ
FK
Spd Contr
Ending

How to order

No switch (built-in magnet for switch)

CMA2-E - FA - 20 - 25 ———— M I

With switch (built-in magnet for switch)

CMA2-E - FA - 20 - 25 - T0H - R - M I

Ⓐ Mounting

Ⓑ Bore size

Ⓒ Stroke

■ The custom stroke is available in 1 mm increments.

Ⓓ Switch model No.

Ⓔ Switch quantity

Ⓕ Option

Ⓖ Accessory *2

Code	Description
Ⓐ Mounting	
LS	Side foot mounting
FA	Flange mounting

Ⓑ Bore size (mm)	
20	ø20
30	ø30
40	ø40

Ⓒ Stroke (mm)

Bore size	Stroke *1	Custom stroke
ø20	**1 to 700**	**In 1 mm increments**
ø30	**1 to 700**	
ø40	**1 to 700**	

Ⓓ Switch model No.

Refer to the switch model No. table on the following page.

*** Lead wire length**	
Blank	1 m (standard)
3	3 m (option)
5	5 m (option)

Ⓔ Switch quantity	
R	1 on rod side
H	1 on head side
D	2
T	3

Ⓕ Option	
M	Piston rod material (stainless steel)

Ⓖ Accessory	
I	Rod eye
Y	Rod clevis (with pin and washer included)

⚠ Precautions for model No. selection

*1: Refer to page 222 for the min. stroke with switch.
*2: "I" and "Y" cannot be selected together.

[Example of model No.]

CMA2-E-FA-20-25-T0H-R-MY

Model: Medium bore size cylinder, double acting/direct mounting

Ⓐ Mounting	: Flange mounting
Ⓑ Bore size	: ø20 mm
Ⓒ Stroke	: 25 mm
Ⓓ Switch model No.	: Reed T0H switch, lead wire 1m
Ⓔ Switch quantity	: 1 on rod side
Ⓕ Option	: Piston rod material change
Ⓖ Accessory	: Rod clevis

[D] Switch model No.

T-switch						
Axial lead wire	Radial lead wire	Contact	Voltage AC	Voltage DC	Indicator	Lead wire
TOH*	TOV*	Reed	●	●	1-color LED	2-wire
T5H*	T5V*	Reed	●	●	No indicator lamp	2-wire
T8H*	T8V*	Reed	●	●	1-color LED	2-wire
T1H*	T1V*	Proximity	●		1-color LED	2-wire
T2H*	T2V*	Proximity		●	1-color LED	2-wire
T3H*	T3V*	Proximity		●	1-color LED	3-wire
T3PH*	T3PV*	Proximity		●	1-color LED	3-wire
T2WH*	T2WV*	Proximity		●	2-color LED	2-wire
T2YH*	T2YV*	Proximity		●	2-color LED	2-wire
T3WH*	T3WV*	Proximity		●	2-color LED	3-wire
T3YH*	T3YV*	Proximity		●	2-color LED	3-wire
T2JH*	T2JV*	Proximity		●	Off-delay	2-wire

How to order switch

[T-switch]

● Switch body + mounting bracket set

CMA2 - T0H - 40

- 40: Bore size (Item Ⓑ on page 224)
- T0H: Switch model No. (Item Ⓓ)

● Switch body only

SW - T0H

- T0H: Switch model No. (Item Ⓓ)

● Mounting bracket set

CMA2 - T - 40

- 40: Bore size (Item Ⓑ on page 224)
- T: Mounting bracket

Internal structure

Same as standard. Refer to page 212.

SCP*3
CMK2
CMA2
SCM
SCG
SCA2
SCS2
CKV2
CAV2/ COVP/N2
SSD2
SSG
SSD
CAT
MDC2
MVC
SMG
MSD/ MSDG
FC*
STK
SRL3
SRG3
SRM3
SRT3
MRL2
MRG2
SM-25
ShkAbs
FJ
FK
Spd Contr
Ending

Dimensions

● Side foot mounting (LS)

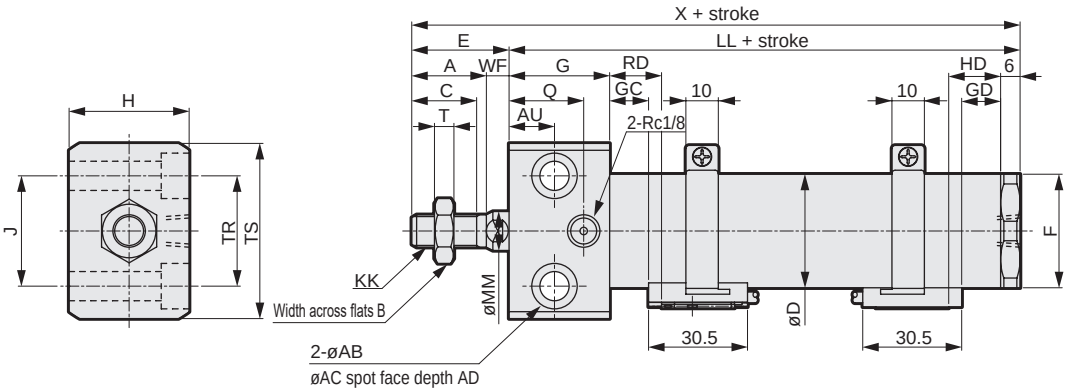

RD: Rod side max. sensitivity position
HD: Head side max. sensitivity position

1: Refer to page 220 for HD, RD, and protruding dimensions of T1, T8* and 2-color LED switches.

Code / Bore size (mm)	A	AB	AC	AD	AU	B	C	D	E	F	G	H	J	KK	LL	MM	Q	T	TR	TS
ø20	20	6.6	11	6.5	9.5	13	18	25	31	26	28	28	22	M8x1.0	79	10	20	5	22	38
ø30	23	9	14	8.6	14	17	20	35	30	35	31	37	30	M10x1.25	88	12	23	6	34	54
ø40	25	11	17.5	10.8	15	19	22	45	31	46	32	48	41	M12x1.5	91	14	24	7	46	68

Code / Bore size (mm)	WF	X	With switch										
			T0, T5, T2, T3				T2W, T3W				P	P1	(Pθ)°
			GC	GD	RD	HD	GC	GD	RD	HD			
ø20	11	110	9	9	13	13	11	11	15	15	19.5	21	19
ø30	7	118	12	12	16	16	14	14	18	18	24.5	26	15
ø40	6	112	13	13	17	17	15	15	19	19	29.5	31	12

● Flange mounting (FA)

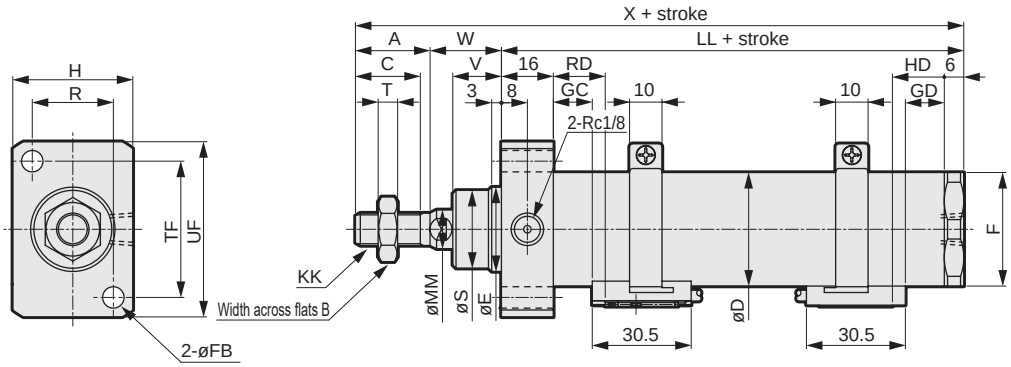

RD: Rod side max. sensitivity position
HD: Head side max. sensitivity position

1: Refer to page 220 for HD, RD, and protruding dimensions of T1, T8* and 2-color LED switches.

Code / Bore size (mm)	A	B	C	D	E	F	FB	H	KK	LL	MM	R	S	T	TF	UF	V	W
ø20	20	13	18	25	18	26	5.5	28	M8x1.0	67	10	19	17	5	29	38	12	23
ø30	23	17	20	35	26	35	6.6	37	M10x1.25	73	12	25	24	6	42	54	15	22
ø40	25	19	22	45	26	46	9	48	M12x1.5	75	14	32	24	7	52	68	16	22

Code / Bore size (mm)	X	With switch										
		T0, T5, T2, T3				T2W, T3W				P	P1	(Pθ)°
		GC	GD	RD	HD	GC	GD	RD	HD			
ø20	110	9	9	13	13	11	11	15	15	19.5	21	19
ø30	118	12	12	16	16	14	14	18	18	24.5	26	15
ø40	112	13	13	17	17	15	15	19	19	29.5	31	12

* For the dimensions of the accessories, refer to page 221.

SCM

Round shaped cylinder

Standard

ø20/ø25/ø32/ø40/
ø50/ø63/ø80/ø100

Overview

Medium bore size (ø20 to ø100) series of general purpose cylinders that have a slim body and a wide variety of bore sizes and variations. The series is the smallest in the standard cylinders.

Features

Slim body
Simple and functional design

Easy cushion needle adjustment
A knob has been attached to the cushion needle for easy adjustment.

Easy mounting
Better workability has been enabled by mounting with four bolts using a general tool.

Selectable switch mounting style

Band method

· Switch mounting position is clear at a glance
Thanks to the marking on the switch rail for mounting it at the max. sensitivity position, the time for position setting of switch during maintenance can be reduced significantly. (Limited to detection of stroke end. Excluding 2-color LED and strong magnetic field proof)

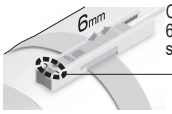

Capable of fine adjustment up to 6 mm in the direction of the stroke for the band & rail method.

Marking of switch mounting position

· Capable of free rotation of switch
Just by loosening the fixing screw, the switch rail can be rotated freely to the circumference direction without changing the position of the band fixing section. Thus, mounting switches and adjusting positions on site will be easy.

· Fixing screw fallout prevention
The rubber for preventing slip is attached inside the band.
The screws will not fall out even if loosened.

Fixed rail

· Rail with integrated switch
A miniature switch has been encased in the switch rail. A lead wire can also be stored in the same rail. Moving and mounting the cylinder switch can be completed by simply adjusting the screw.

CONTENTS

Series variation	228
Variation and option combination selection table	230
● Double acting/single rod (SCM)	232
● Single acting/push (SCM-X)	254
● Single acting/pull (SCM-Y)	260
● Double acting/stroke adjustable/push (SCM-P)	266
● Double acting/stroke adjustable/pull (SCM-R)	272
● Double acting/heat resistant (SCM-T)	278
● Double acting/position locking (SCM-Q)	282
● Double acting/fine speed (SCM-F)	292
● Double acting/low speed (SCM-O)	298
● Double acting/low friction (SCM-U)	302
● Double acting/double rod (SCM-D)	308
● Double acting/back to back (SCM-B)	316
● Double acting/2-stage (SCM-W)	322
● Double acting/tandem (SCM-W4)	328
● Double acting/rotation-stop (SCM-M)	334
● Double acting/direct mounting foot (SCM-LD)	340
SCM Series common accessory dimensions	252
⚠ Safety precautions	346

The cylinder switches T2YH, T2YV, T3YH, and T3YV are scheduled for end of production at the end of December 2023.

Series variation

Round shaped cylinder SCM Series

Variation	Model No. / JIS symbol	Bore size (mm)	Standard stroke (mm) 25	50	75	100	125	150	200	250	300	Min. stroke (mm)	Max. stroke (mm)	Custom stroke (per mm)	Basic 00
Double acting/ single rod	SCM	ø20/ø25/ø32	●	●	●	●	●	●	●	●	●	10	1000	1	●
		ø40/ø50/ø63	●	●	●	●	●	●	●	●	●		1500		●
		ø80/ø100	●	●	●	●	●	●	●	●	●		1500		●
Single acting/push	SCM-X	ø20/ø25/ø32/ø40	●	●	●	●	●	●	●			5	200	1	●
Single acting/pull	SCM-Y	ø20/ø25/ø32/ø40	●	●	●	●	●	●	●			5	200	1	●
Double acting/stroke adjustable (push)	SCM-P	ø20/ø25/ø32	●	●	●	●	●	●	●	●	●	10	600	1	●
		ø40/ø50/ø63	●	●	●	●	●	●	●	●	●		600		●
Double acting/stroke adjustable (pull)	SCM-R	ø20/ø25/ø32	●	●	●	●	●	●	●	●	●	10	1000	1	●
		ø40/ø50/ø63	●	●	●	●	●	●	●	●	●		1500		●
Double acting/ heat resistant	SCM-T	ø20/ø25/ø32/ø40	●	●	●	●	●	●	●	●	●	10	1000	1	●
		ø50/ø63	●	●	●	●	●	●	●	●	●		1500		●
		ø80/ø100	●	●	●	●	●	●	●	●	●		1500		●
Double acting/ position locking	SCM-Q	ø20/ø25/ø32	●	●	●	●	●	●	●	●	●	10	1000	1	●
		ø40/ø50/ø63	●	●	●	●	●	●	●	●	●		1500		●
		ø80/ø100	●	●	●	●	●	●	●	●	●		1500		●
Double acting/fine speed	SCM-F	ø20/ø25/ø32/ø40	●	●	●	●	●	●	●	●	●	5	500	1	●
Double acting/ low speed	SCM-O	ø20/ø25/ø32	●	●	●	●	●	●	●	●	●	10	1000	1	●
		ø40/ø50/ø63	●	●	●	●	●	●	●	●	●		1500		●
		ø80/ø100	●	●	●	●	●	●	●	●	●		1500		●
Double acting/ low friction	SCM-U	ø20/ø25/ø32	●	●	●	●	●	●	●	●	●	10	1000	1	●
		ø40/ø50/ø63											1500		●
		ø80/ø100											1500		●
Double acting/ double rod	SCM-D	ø20/ø25/ø32	●	●	●	●	●	●	●	●	●	10	600	1	●
		ø40/ø50/ø63	●	●	●	●	●	●	●	●	●		600		●
		ø80/ø100	●	●	●	●	●	●	●	●	●		600		●
Double acting/ back to back	SCM-B	ø20/ø25/ø32	●	●	●	●	●	●	●	●	●	10	500	1	●
		ø40/ø50/ø63	●	●	●	●	●	●	●	●	●		750		●
Double acting/2-stage	SCM-W (Indicator	ø20/ø25/ø32	●	●	●	●	●	●	●	●	●	10	600	1	●
		ø40/ø50/ø63	●	●	●	●	●	●	●	●	●		600		●
Double acting/ tandem	SCM-W4 (Indicator	ø20/ø25/ø32	●	●	●	●	●	●	●	●	●	10	600	1	●
		ø40/ø50/ø63	●	●	●	●	●	●	●	●	●		600		●
Double acting/ rotation-stop	SCM-M	ø20/ø25/ø32	●	●	●	●	●	●	●	●	●	10	600	1	●
		ø40/ø50/ø63	●	●	●	●	●	●	●	●	●		600		●
Double acting/direct mounting foot	SCM-LD	ø20/ø25/ø32/ø40/ø50/ø63	●	●	●	●	●	●	●	●	●	10	300	1	

●: Standard, ◎: Option, ○: Made to order, ▒: Not available

Mounting							Cushion				Option					Accessory					
Axial foot	Rod side flange	Head side flange	Eye bracket	Clevis bracket	Rod side trunnion	Head side trunnion	With two-sided air cushion	Rod side air cushion	Head side air cushion	With two-sided rubber cushion	Bellows (100°C)	Bellows (250°C)	Switch rail included at shipment	Piston rod material change	Copper and PTFE free	Rod eye	Rod clevis	Eye bracket	Clevis bracket	Switch	Page
LB	FA	FB	CA	CB	TA	TB	B	R	H	D	J	L	Q	M	P6	I	Y	B1	B2		
●	●	●	●		●	●	●	●	●	●	◎	◎	◎	◎	◎	◎	◎		◎	◎	232
●	●	●	●		●	●	●	●	●	●	◎	◎	◎	◎	◎	◎	◎		◎		
●	●	●		●			●	●	●	●	◎	◎	◎	◎	◎	◎	◎	◎			
●	●	●	●		●	●				●	◎	◎	◎	◎	◎	◎	◎		◎	◎	254
●	●	●	●		●	●				●	◎	◎	◎	◎	◎	◎	◎		◎	◎	260
●	●				●	●				●	◎	◎	◎	◎	◎	◎	◎		◎	◎	266
●	●				●	●				●	◎	◎	◎	◎	◎	◎	◎		◎		
●	●				●	●				●	◎	◎	◎	◎	◎	◎	◎		◎	◎	272
●	●				●	●				●	◎	◎	◎	◎	◎	◎	◎		◎		
●	●	●	●		●	●				●		◎		◎		◎	◎		◎		278
●	●	●	●		●	●	●	●	●			◎		◎		◎	◎		◎		
●	●	●		●			●	●	●			◎		◎		◎	◎	○			
●	●	●	●		●[1]	●[2]	●	●	●				◎	○	○	◎	◎		◎	◎	282
●	●	●	●		●[1]	●[2]	●	●	●				◎	○	○	◎	◎		◎		
●	●	●		●			●	●	●				◎	○	○	◎	◎	○			
●	●	●	●		●	●				●			◎	◎		◎	◎		◎	◎	292
●	●	●	●		●	●				●	◎	◎	◎	◎		◎	◎		◎	◎	298
●	●	●	●		●	●				●	◎	◎	◎	◎		◎	◎		◎		
●	●	●		●						●	◎	◎	◎	◎		◎	◎	○			
●	●	●	●		●	●				●			◎	◎		◎	◎		◎	◎	302
●	●	●	●		●	●				●			◎	◎		◎	◎		◎		
●	●	●		●						●			◎	◎		◎	◎	○			
●	●				●		●	●	●	●	◎	◎	◎	◎	◎	◎	◎		◎	◎	308
●	●				●		●	●	●	●	◎	◎	◎	◎	◎	◎	◎		◎		
●	●						●	●	●	●	◎	◎	◎	◎	◎	◎	◎				
●	●	●			●	●				●	◎	◎	◎	◎	◎	◎	◎		◎	◎	316
●	●	●			●	●				●	◎	◎	◎	◎	◎	◎	◎		◎		
●	●	●	●		●	●				●	◎	◎	◎	◎	◎	◎	◎		◎	◎	322
●	●	●	●		●	●				●	◎	◎	◎	◎	◎	◎	◎		◎		
●	●	●	●		●	●				●	◎	◎	◎	◎	◎	◎	◎		◎	◎	328
●	●	●	●		●	●				●	◎	◎	◎	◎	◎	◎	◎		◎		
●	●	●	●		●	●				●	◎	◎	◎			◎	◎		◎	◎	334
●	●	●	●		●	●				●	◎	◎	◎			◎	◎		◎		
										●			◎	◎	○	◎	◎			◎	340

*1: "TA" head side trunnion is not available for the head-side position locking.
*2: "TB" rod side trunnion is not available for the rod-side position locking.

Variation and option combination selection table

◎: Option
○: Available (made-to-order product)
△: Available depending on conditions (Contact CKD.)
×: Not available

Category		Category	Variation																Port thread			Option							
			Double acting basic	Single acting push	Single acting pull	Double acting double rod	Back to back	Two-stage	Tandem	Stroke adjustable push	Stroke adjustable pull	Rotation-stop	With air cushion	Heat resistance (120°C)	Low speed	Position locking	Low friction		NPT	G		Nylon tarpaulin with bellows	Silicone rubber with bellows	Piston rod material stainless steel	Specify piston rod end form	Copper and PTFE free	Clean-room specifications (exhaust port)	Clean-room specifications (vacuum treatment)	Switch rail included at shipment
			None	X	Y	D	B	W	W4	P	R	M	B, R, H	T	O	Q	U		N	G		J	L	M	N*	P6	P7	P71	Q
Variation	Double acting basic	Blank											◎						○	○		◎	◎	◎	○	◎	◎	◎	◎
	Single acting push	X			×	×	○	×	×	×	○	△	×	△	×	×	×		○	○		◎	◎	◎	○	◎	×	×	◎
	Single acting pull	Y				×	○	×	×	×	×	△	×	△	×	×	×		○	○		◎	◎	◎	○	◎	×	×	◎
	Double acting double rod	D					×	×	×	×	×	*2	○	○	×	○	×		○	○		◎	◎	◎	○	◎	○	○	◎
	Back to back	B						×	×	×	×	△	△	○	○	×	×		○	○		◎	◎	◎	○	◎	○	○	◎
	Two-stage	W							×	×	×	○	×	○	×	×	×		○	○		◎	◎	◎	○	◎	△	△	◎
	Tandem	W4								×	×	○	×	×	×	×	×		○	○		◎	◎	◎	○	◎	△	△	◎
	Stroke adjustable push	P									×	○	×	△	×	×	×		○	○		◎	◎	◎	○	◎	×	×	◎
	Stroke adjustable pull	R										○	×	△	○	△	×		○	○		◎	◎	◎	○	◎	×	×	◎
	Rotation-stop	M											△	×	×	△	×		○	○		◎	◎	△	○	×	×	×	◎
	With air cushion	B, R, H												*4	×	◎	×		*1	*1		◎	◎	◎	○	◎	×	×	◎
	Heat resistant (120°C)	T													×	×	×		○	○		×	◎	◎	○	×	×	×	
	Low speed	O														△	×		○	○		◎	◎	◎	○	×	×	×	◎
	Position locking	Q															×		*3	*3		△	△	◎	○	○	◎	◎	◎
	Low friction	U																	○	○		×	×	◎	○	×	×	×	◎
Port thread	NPT	N																				○	○	○	○	○	○	○	○
	G	G																				○	○	○	○	○	○	○	○
Option	Nylon tarpaulin with bellows	J																					×	○	○	○	×	×	○
	Silicone rubber with bellows	L																						○	○	○	×	×	○
	Piston rod material stainless steel	M																							○	○	○	○	○
	Specify piston rod end form	N*																								○	○	○	○
	Copper and PTFE free	P6																									×	×	○
	Clean-room specifications (exhaust port)	P7																											○
	Clean-room specifications (vacuum treatment)	P71																											○
	Switch rail included at shipment	Q																											
Accessory	Cylinder switch	Listed separately	◎	◎	◎	◎	◎	◎	◎	◎	◎	◎	◎	×	◎	◎	◎		○	○		◎	◎	◎	○	◎	○	○	◎
	Rod eye	I	◎	◎	◎	◎	◎	◎	◎	◎	◎	◎	◎	◎	◎	◎	◎		○	○		◎	◎	◎	○	◎	×	×	◎
	Rod clevis	Y	◎	◎	◎	◎	◎	◎	◎	◎	◎	◎	◎	◎	◎	◎	◎		○	○		◎	◎	◎	○	◎	×	×	◎
	Eye bracket *5	B1	◎	×	×	×	×	×	×	×	×	×	×	◎	◎	◎	◎		○	○		◎	◎	◎	○	◎	×	×	◎
	Clevis bracket *6	B2	◎	◎	◎	◎	◎	◎	◎	◎	◎	◎	◎	◎	◎	◎	◎		○	○		◎	◎	◎	○	◎	×	×	◎

*1: ø20/ø25 are not available for the type with air cushion.
*2: Rotation-stop is only on one side.
*3: ø20/ø25 are not available.
*4: ø20 to ø32 are not available.
*5: ø80/ø100 only
*6: ø20 to ø63 only

[Example of model No.]

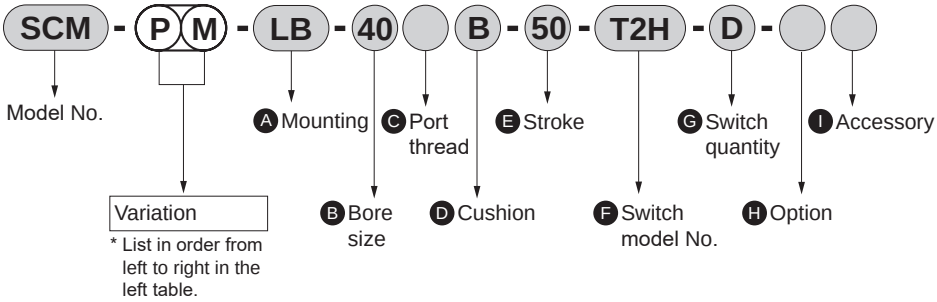

Model No.: Round shaped cylinder

● Variation: Adjustable stroke (push-out)/rotation-stop

A	Mounting	: Axial foot
B	Bore size	: ø40 mm
C	Port thread	: Rc thread
D	Cushion	: With two-sided air cushion
E	Stroke	: 50 mm
F	Switch model No.	: Proximity T2H switch, lead wire 1 m
G	Switch quantity	: 2
H	Option	: None
I	Accessory	: None

*1: The back to back includes two cylinders. Specify the model No. as below when ordering variation.
For S1 variations only, insert the variation code before the stroke of S1.
(Example) SCM-B-32-O25-50: Only S1 is the low speed.
For S2 variations only, insert the variation code before the stroke of S2.
(Example) SCM-B-32-25-O50: Only S2 is the low speed.
When ordering the same variation for S1 and S2, insert the variation code before the tube bore size.
(Example) SCM-BO-32-25-50: Both S1 and S2 are the low speed.

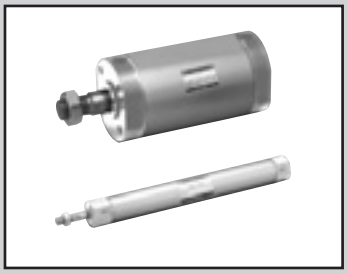

Round shaped cylinder Double acting/single rod

SCM Series

● Bore size: ø20/ø25/ø32/ø40/ ø50/ø63/ø80/ø100

JIS symbol

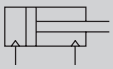

RoHS CAD

Specifications

Item		SCM							
Bore size mm		ø20	ø25	ø32	ø40	ø50	ø63	ø80	ø100
Actuation		Double acting							
Working fluid		Compressed air							
Max. working pressure MPa		1.0 (≈150 psi, 10 bar)							
Min. working pressure MPa		0.1 (≈15 psi, 1 bar)				0.05 (≈7.3 psi, 0.5 bar)			
Proof pressure MPa		1.6 (≈230 psi, 16 bar)							
Ambient temperature °C		-10 (14°F) to 60 (140°F) (no freezing)							
Port size	With rubber cushion	Rc1/8				Rc1/4		Rc3/8	Rc1/2
	With air cushion	M5		Rc1/8		Rc1/4		Rc3/8	Rc1/2
Stroke tolerance mm	With rubber cushion	+1.4 0 (to 1000)			+1.4 0 (to 1500)	+2.3 0 (to 1000),		+2.7 0 (to 1500)	
	With air cushion	+1.4 0 (to 1000)			+1.4 0 (to 1500)	+1.4 0 (to 1000),		+1.8 0 (to 1500)	
Working piston speed mm/s		30 to 1000 (Operate within the allowable absorbed energy.)							
Cushion		Either rubber cushion or air cushion can be selected.							
Effective air cushion length mm		8.1	8.1	8.6	8.6	13.4	13.4	15.4	15.4
Lubrication		Not required (use turbine oil ISO VG32 if necessary for lubrication)							
Allowable absorbed energy J	With rubber cushion	0.1	0.2	0.5	0.9	1.6	1.6	3.3	5.8
	With air cushion	0.8	1.2	2.5	3.7	8.0	14.4	25.4	45.6
	Without cushion	-	-	-	-	0.057	0.057	0.112	0.153

*1: The values of allowable absorbed energy for "No cushion" are the allowable absorbed energy on the non-specified side when an air cushion is selected for the other side ("R"→ Head side, "H"→ Rod side).
*2: Without any cushion, this product cannot absorb large energy generated by an external load. Provide a shock absorber on the outside.

Stroke

Bore size (mm)	Standard stroke (mm)	Max. stroke (mm)	Min. stroke (mm)
ø 20	25, 50, 75, 100, 125, 150, 200, 250, 300	1000	10
ø 25			
ø 32			
ø 40		1500	
ø 50			
ø 63			
ø 80			
ø100			

*1: The custom stroke is available in 1 mm increments.

Number of installed switches and min. stroke (mm)

● Switch mounting method: Rail

Switch quantity	1				2			3				4				5			
Bore size (mm)	Proximity			Reed	Proximity		Reed	Proximity			Reed	Proximity			Reed	Proximity			Reed
	T2, T3	T2W, T3W	T*Y*		T2, T3	T*Y*		T2, T3	T2W, T3W	T*Y*		T2, T3	T2W, T3W	T*Y*		T2, T3	T2W, T3W	T*Y*	
ø20	10				25			50	70	70	55	55	70	70	55	75	110	110	90
ø25	10				25			50	70	70	55	55	70	70	55	75	110	110	90
ø32	10				25			50	70	70	55	55	70	70	55	75	110	110	90
ø40	10				25			50	70	70	55	55	70	70	55	75	110	110	90
ø50	10				25			50	65	65	55	55	65	65	55	75	110	110	90
ø63	10				25			50	65	65	55	55	65	65	55	75	110	110	90
ø80	10				25			50	65	65	55	55	65	65	55	75	110	110	90
ø100	10				25			50	65	65	55	55	65	65	55	75	110	110	90

*1: For types with one switch, when the stroke is between 10 and 24 mm, the trunnion mounting is not available since the switch rail mounting position is different. Refer to page 345 for mounting position.

● Switch mounting: Band

Switch quantity	1				2				3				4				5			
Bore size (mm)	Proximity			Reed	Proximity			Reed	Proximity			Reed	Proximity			Reed	Proximity			Reed
	T2, T3	T2W, T3W	T*Y*		T0, T5 T2, T3	T2W, T3W	T*Y*		T0, T5 T2, T3	T2W, T3W	T*Y*		T0, T5 T2, T3	T2W, T3W	T*Y*		T0, T5 T2, T3	T2W, T3W	T*Y*	
ø20	10				25	30	35	25	50	55	55	50	70	75	80	70	95	100	100	95
ø25	10				25	30	35	25	50	55	55	50	70	75	80	70	95	100	100	95
ø32	10				25	30	35	25	50	55	55	50	70	75	80	70	95	100	100	95
ø40	10				25	30	35	25	50	55	55	50	70	75	80	70	95	100	100	95
ø50	10				25	30	35	25	50	55	55	50	70	75	80	70	95	100	100	95
ø63	10				25	30	35	25	50	55	55	50	70	75	80	70	95	100	100	95
ø83	10				25	30	35	25	50	55	55	50	70	75	80	70	95	100	100	95
ø100	10				25	30	35	25	50	55	55	50	70	75	80	70	95	100	100	95

Switch specifications

● 1-color/2-color LED

Item	2-wire proximity	2-wire proximity			3-wire proximity				2-wire reed							2-wire proximity
	T1H/ T1V	T2H/T2V/ T2JH/T2JV	T2YH/ T2YV	T2WH/ T2WV	T3H/ T3V	T3PH/ T3PV	T3YH/ T3YV	T3WH/ T3WV	T0H/T0V		T5H/T5V		T8H/T8V			T2YD (*4) T2YDT
Applications	For programming controller, relay, compact solenoid valve	Dedicated for programmable controller			For programmable controller, relay				For programmable controller, relay		For programmable controller, relay (no lamp), serial		For programmable controller, relay			Dedicated for programmable controller
Output method	-				NPN output	PNP output	NPN output	NPN output	-							
Pwr. supp. V.	-				10 to 28 VDC				-							
Load voltage	85 to 265 VAC	10 to 30 VDC		24 VDC ±10%	30 VDC or less				12/24 VDC	100/110 VAC	5/12/24 VDC	100/110 VAC	12/24 VDC	110 VAC	220 VAC	24 VDC ±10%
Load current	5 to 100 mA	5 to 20 mA (*3)			100 mA or less		50 mA or less		5 to 50 mA	7 to 20 mA	50 mA or less	20 mA or less	5 to 50 mA	7 to 20 mA	7 to 10 mA	5 to 20 mA
Indicator	LED (Lit when ON)	LED (Lit when ON)	Red/green LED (Lit when ON)	Red/green LED (Lit when ON)	LED (Lit when ON)	Yellow LED (Lit when ON)	Red/green LED (Lit when ON)	Red/green LED (Lit when ON)	LED (Lit when ON)		No indicator lamp		LED (Lit when ON)			Red/green LED (Lit when ON)
Leakage current	≤ 1 mA at 100 VAC, ≤ 2 mA at 200 VAC	1 mA or less			10 μA or less				0 mA							1 mA or less
Weight g	1 m:33 3 m:87 5 m:142	1 m:18 3 m:49 5 m:80	1 m:33 3 m:87 5 m:142	1 m:18 3 m:49 5 m:80	1 m:18 3 m:49 5 m:80		1 m:33 3 m:87 5 m:142	1 m:18 3 m:49 5 m:80	1 m:18 3 m:49 5 m:80				1 m:33 3 m:87 5 m:142			1 m:61 3 m:166 5 m:272

*1: Refer to Ending Page 1 for detailed switch specifications and dimensions.
*2: Switches other than the above models, such as switches with connectors, are also available. Refer to Ending Page 1.
*3: Max. load current: 20 mA at 25°C. The current is lower than 20 mA if the operating ambient temperature around the switch is higher than 25°C. (5 to 10 mA at 60°C)
*4: Switch for AC magnetic field (T2YD/T2YDT) cannot be used in DC magnetic field.

Cylinder weight

(Unit: kg)

Item/mounting / Bore size (mm)	Product weight when stroke (S) = 0 mm					Switch weight (per 1 pc)	Additional weight per S = 10 mm	Additional weight per S = 10 mm (With switch rail)	Band weight per switch
	Basic (00)	Axial foot (LB)	Flange (FA/FB)	Clevis	Trunnion (TA/TB)				
ø 20	0.10	0.21	0.13	0.15	0.11	Refer to the weight in the switch specifications.	0.01	0.012	0.007
ø 25	0.17	0.30	0.21	0.25	0.19		0.014	0.016	0.007
ø 32	0.26	0.42	0.32	0.41	0.29		0.018	0.02	0.007
ø 40	0.41	0.63	0.49	0.64	0.46		0.03	0.032	0.007
ø 50	0.77	1.25	1.11	1.17	0.91		0.044	0.046	0.008
ø 63	1.07	1.79	1.57	1.75	1.21		0.052	0.054	0.009
ø 80	2.04	3.00	2.75	2.75	-		0.07	0.072	0.010
ø100	3.17	4.92	4.52	4.45	-		0.098	0.10	0.010

(Example) Product weight of SCM-LB-40B-100-T2H-D
- Product weight when S = 0 mm.....0.63 kg
- Additional weight when S = 100 mm .....0.032 x $\frac{100}{10}$ = 0.32 kg
- Weight of 2 switches.....0.018 x 2 = 0.036 kg
- Product weight.....0.63 + 0.32 + 0.036 = 0.986 kg

Theoretical thrust table

(Unit: N)

Bore size (mm)	Operating direction	Working pressure MPa											
		0.05	0.1	0.15	0.2	0.3	0.4	0.5	0.6	0.7	0.8	0.9	1.0
ø20	Push	–	31.4	47.1	62.8	94.2	$1.26x10^2$	$1.57x10^2$	$1.88x10^2$	$2.20x10^2$	$2.51x10^2$	$2.83x10^2$	$3.14x10^2$
	Pull	–	26.4	39.6	52.8	79.2	$1.06x10^2$	$1.32x10^2$	$1.58x10^2$	$1.85x10^2$	$2.11x10^2$	$2.38x10^2$	$2.64x10^2$
ø25	Push	–	49.1	73.6	98.2	$1.47x10^2$	$1.96x10^2$	$2.45x10^2$	$2.95x10^2$	$3.44x10^2$	$3.93x10^2$	$4.42x10^2$	$4.91x10^2$
	Pull	–	41.2	61.9	82.5	$1.24x10^2$	$1.65x10^2$	$2.06x10^2$	$2.47x10^2$	$2.89x10^2$	$3.30x10^2$	$3.71x10^2$	$4.12x10^2$
ø32	Push	–	80.4	$1.21x10^2$	$1.61x10^2$	$2.41x10^2$	$3.22x10^2$	$4.02x10^2$	$4.83x10^2$	$5.63x10^2$	$6.43x10^2$	$7.24x10^2$	$8.04x10^2$
	Pull	–	69.1	$1.04x10^2$	$1.38x10^2$	$2.07x10^2$	$2.76x10^2$	$3.46x10^2$	$4.15x10^2$	$4.84x10^2$	$5.53x10^2$	$6.22x10^2$	$6.91x10^2$
ø40	Push	–	$1.26x10^2$	$1.88x10^2$	$2.51x10^2$	$3.77x10^2$	$5.03x10^2$	$6.28x10^2$	$7.54x10^2$	$8.80x10^2$	$1.01x10^3$	$1.13x10^3$	$1.26x10^3$
	Pull	–	$1.06x10^2$	$1.58x10^2$	$2.11x10^2$	$3.17x10^2$	$4.22x10^2$	$5.28x10^2$	$6.33x10^2$	$7.39x10^2$	$8.44x10^2$	$9.50x10^2$	$1.06x10^3$
ø50	Push	98.0	$1.96x10^2$	$2.95x10^2$	$3.93x10^2$	$5.89x10^2$	$7.85x10^2$	$9.82x10^2$	$1.18x10^3$	$1.37x10^3$	$1.57x10^3$	$1.77x10^3$	$1.96x10^3$
	Pull	82.5	$1.65x10^2$	$2.47x10^2$	$3.30x10^2$	$4.95x10^2$	$6.60x10^2$	$8.25x10^2$	$9.90x10^2$	$1.15x10^3$	$1.32x10^3$	$1.48x10^3$	$1.65x10^3$
ø63	Push	$1.56x10^2$	$3.12x10^2$	$4.68x10^2$	$6.23x10^2$	$9.35x10^2$	$1.25x10^3$	$1.56x10^3$	$1.87x10^3$	$2.18x10^3$	$2.49x10^3$	$2.81x10^3$	$3.12x10^3$
	Pull	$2.40x10^2$	$2.80x10^2$	$4.20x10^2$	$5.61x10^2$	$8.41x10^2$	$1.12x10^3$	$1.40x10^3$	$1.68x10^3$	$1.96x10^3$	$2.24x10^3$	$2.52x10^3$	$2.80x10^3$
ø80	Push	$2.51x10^2$	$5.03x10^2$	$7.54x10^2$	$1.01x10^3$	$1.51x10^3$	$2.01x10^3$	$2.51x10^3$	$3.02x10^3$	$3.52x10^3$	$4.02x10^3$	$4.52x10^3$	$5.03x10^3$
	Pull	$2.27x10^2$	$4.54x10^2$	$6.80x10^2$	$9.07x10^2$	$1.36x10^3$	$1.81x10^3$	$2.27x10^3$	$2.72x10^3$	$3.17x10^3$	$3.63x10^3$	$4.08x10^3$	$4.54x10^3$
ø100	Push	$3.92x10^2$	$7.85x10^2$	$1.18x10^3$	$1.57x10^3$	$2.36x10^3$	$3.14x10^3$	$3.93x10^3$	$4.71x10^3$	$5.50x10^3$	$6.28x10^3$	$7.07x10^3$	$7.85x10^3$
	Pull	$3.57x10^2$	$7.15x10^2$	$1.07x10^3$	$1.43x10^3$	$2.14x10^3$	$2.86x10^3$	$3.57x10^3$	$4.29x10^3$	$5.00x10^3$	$5.72x10^3$	$6.43x10^3$	$7.15x10^3$

SCP*3
CMK2
CMA2
SCM
SCG
SCA2
SCS2
CKV2
CAV2/COVP/N2
SSD2
SSG
SSD
CAT
MDC2
MVC
SMG
MSD/MSDG
FC*
STK
SRL3
SRG3
SRM3
SRT3
MRL2
MRG2
SM-25
ShkAbs
FJ
FK
Spd Contr
Ending

How to order

No switch (built-in magnet for switch)

SCM - LB - 40 ( ) B - 100 ——— J I

With switch (built-in magnet for switch)

SCM - LB - 40 ( ) B - 100 - T2H - D - ( ) J I

- Ⓐ Mounting *1
- Ⓑ Bore size
- Ⓒ Port thread
- Ⓓ Cushion
- Ⓔ Stroke
- Ⓕ Switch model No. *4 *5
- Ⓖ Switch quantity
- Ⓗ Switch mounting
- Ⓘ Option *2 *6 *8
- Ⓙ Accessory *9

Code	Description

Ⓐ Mounting

	Bore size (ø)	20	25	32	40	50	63	80	100
00	Basic	●	●	●	●	●	●	●	●
LB	Axial foot	●	●	●	●	●	●	●	●
FA	Rod side flange	●	●	●	●	●	●	●	●
FB	Head side flange	●	●	●	●	●	●	●	●
CA	Eye bracket	●	●	●	●	●	●		
CB	Clevis bracket (pin and snap ring incl.)							●	●
TA	Rod side trunnion	●	●	●	●	●	●		
TB	Head side trunnion	●	●	●	●	●	●		

Ⓑ Bore size (mm)

20	ø20
25	ø25
32	ø32
40	ø40
50	ø50
63	ø63
80	ø80
100	ø100

Ⓒ Port thread

Blank	Rc thread
N	NPT thread (made-to-order product) With air cushion: ø32 and over
G	G thread (made-to-order product) With air cushion: ø32 and over

Ⓓ Cushion

B	With two-sided air cushion
R	Rod side air cushioned
H	Head side air cushioned
D	With two-sided rubber cushion

Ⓔ Stroke (mm)

Bore size	Stroke *2	Custom stroke
ø20 to ø32	10 to 1000	In 1 mm increments
ø40 to ø100	10 to 1500	

Ⓕ Switch model No.

Axial lead wire	Radial lead wire	Contact	Voltage AC	Voltage DC	Indicator	Lead wire
T0H*	T0V*	Reed	●	●	1-color LED	2-wire
T5H*	T5V*	Reed	●	●	No indicator lamp	2-wire
T8H*	T8V*	Reed	●	●	1-color LED	2-wire
T1H*	T1V*	Proximity	●		1-color LED	2-wire
T2H*	T2V*	Proximity		●	1-color LED	2-wire
T3H*	T3V*	Proximity		●	1-color LED	3-wire
T3PH*	T3PV*	Proximity		●	1-color LED	3-wire
T2WH*	T2WV*	Proximity		●	2-color LED	2-wire
T2YH*	T2YV*	Proximity		●	2-color LED	2-wire
T3WH*	T3WV*	Proximity		●	2-color LED	3-wire
T3YH*	T3YV*	Proximity		●	2-color LED	3-wire
T2YD*	-	Proximity		●	2-color LED for AC magnetic field	2-wire
T2YDT*	-	Proximity		●	2-color LED for AC magnetic field	2-wire
T2JH*	T2JV*	Proximity		●	1-color LED off-delay	2-wire

*** Lead wire length**

Blank	1 m (standard)
3	3 m (option)
5	5 m (option)

Ⓖ Switch quantity

R	1 on rod side
H	1 on head side
D	2
T	3
4	4 (when there are more than 4 switches, indicate switch quantity.)

Ⓗ Switch mounting

Blank	Rail method
Z	Band method

Ⓘ Option

		Max. ambient temp.	Instantaneous max. temp.
J	Bellows	100°C	200°C
L	Bellows	250°C	400°C
Q	Switch rail included at shipment		
M	Piston rod material (stainless steel)		
P6	Copper and PTFE free		

Ⓙ Accessory

	Bore size (ø)	20	25	32	40	50	63	80	100
I	Rod eye	●	●	●	●	●	●	●	●
Y	Rod clevis (pin and snap ring included)	●	●	●	●	●	●	●	●
B1	Eye bracket							●	●
B2	Clevis bracket	●	●	●	●	●	●		

Precautions for model No. selection

*1 : Mounting bracket will be shipped with the product.
*2 : If the product is supplied with bellows and the mounting bracket is LB, FA, or TA, it will be shipped assembled.
*3 : Refer to page 232 for the number of installed switches and the min. stroke.
*4 : Switches other than Ⓕ Switch model No. are also available. (Made to order) Refer to Ending Page 16 for details.
*5 : T8H/V switches cannot be mounted when the bore size is from ø20 to ø40 and the switch mounting style is the rail.
*6 : The instantaneous max. temperature is the temperature when sparks, cutting chips, etc., instantaneously contact the bellows.
*7 : Refer to Ending Page 85 for custom specifications of rod end form.
*8 : "Q" (switch rail enclosed at shipment) is not available for the "Z" switch mounting.
*9 : "I" and "Y" cannot be selected together.
*10 : Switches are shipped with the product. Contact CKD if assembling before shipment is necessary.

[Example of model No.]

SCM-LB-40B-100-T2H-D-JI

Model: Round shaped cylinder, double acting

Ⓐ Mounting	: Axial foot
Ⓑ Bore size	: ø40 mm
Ⓒ Port thread	: Rc thread
Ⓓ Cushion	: With two-sided air cushion
Ⓔ Stroke	: 100 mm
Ⓕ Switch model No.	: Proximity T2H switch, lead wire 1 m
Ⓖ Switch Quantity	: 2 pcs. included
Ⓗ Switch mounting	: Rail
Ⓘ Option	: Bellows material for max. ambient temperature 100°C
Ⓙ Accessory	: Rod eye

How to order switch

[Switch mounting: Rail]

● Switch body + mounting rail set

SCM - T0H* - D - 40 - 100

- T0H*: Switch model No. (Item Ⓕ on page 234)
- D: Switch quantity (Item Ⓖ on page 234)
- 40: Bore size (Item Ⓑ on page 234)
- 100: Stroke (*1) (Item Ⓔ on page 234)

● Mounting rail only

SCM - T - 40 - 100

- T: Mounting rail
- 40: Bore size (Item Ⓑ on page 234)
- 100: Stroke (*1) (Item Ⓔ on page 234) (*2)

*1: Indicate X if the stroke exceeds 300 mm.
If exceeding 300 mm, a short rail (with 100 mm switch adjustment length) will be included per switch.
*2: If indicating X when ordering mounting rails only, order the same number of rails as that of applicable switches.

[Switch mounting: Band]

● Switch body + mounting bracket set + band

SCM - T2H* - 40 - Z

- T2H*: Switch model No. (Item Ⓕ on page 234)
- 40: Bore size (Item Ⓑ on page 234)

● Mounting bracket set + band

SCM - Z - 40

- 40: Bore size (Item Ⓑ on page 234)

[Switch body only]

SW - T0H*

- T0H*: Switch model No. (Item Ⓕ on page 234)

Clean-room specifications

(Catalog No. CB-033SA)

● Anti-dust generation structure for use in cleanrooms

SCM -……- **P7***

SCM -……- **P5***

Specifications for rechargeable battery

(Catalog No. CC-1226A)

● Design compatible with rechargeable battery manufacturing process

SCM -…- **P4***

* Contact CKD for details.

How to order mounting bracket

Bore size (mm) / Mounting bracket	ø20	ø25	ø32	ø40	ø50	ø63	ø80	ø100
Foot (LB)	SCM-LB-20	SCM-LB-25	SCM-LB-32	SCM-LB-40	SCM-LB-50	SCM-LB-63	SCM-LB-80	SCM-LB-100
Flange (FA/FB)	SCM-FA-20	SCM-FA-25	SCM-FA-32	SCM-FA-40	SCM-FA-50	SCM-FA-63	SCM-FA-80	SCM-FA-100
Eye bracket (CA)	SCM-CA-20	SCM-CA-25	SCM-CA-32	SCM-CA-40	SCM-CA-50	SCM-CA-63	-	-
Clevis bracket (CB)	-	-	-	-	-	-	SCM-CB-80	SCM-CB-100
Trunnion (TA/TB)	SCM-TA-20	SCM-TA-25	SCM-TA-32	SCM-TA-40	SCM-TA-50	SCM-TA-63	-	-

*1: All mounting brackets are supplied with mounting bolts.
*2: The foot mounting bracket is provided as 2 pcs./set.

Material of mounting bracket

Mounting	Material
LB	Steel
FA/FB	Aluminum *2
TA/TB	Steel
CA	Steel
CB	Cast iron

*1: Mounting bracket will be shipped with the product.
However, it will be attached to the product if the product is the type with bellows and LB, FA, or TA mounting bracket, SCM-P with LB, FB or TB mounting bracket, or SCM-R with LB, FB or TB mounting bracket.
*2: The ø50 to ø100 material is steel.

SCP*3
CMK2
CMA2
SCM
SCG
SCA2
SCS2
CKV2
CAV2/COVP/N2
SSD2
SSG
SSD
CAT
MDC2
MVC
SMG
MSD/MSDG
FC*
STK
SRL3
SRG3
SRM3
SRT3
MRL2
MRG2
SM-25
ShkAbs
FJ
FK
Spd Contr
Ending

Internal structure and parts list (with rubber cushion)

● ø20 to ø40

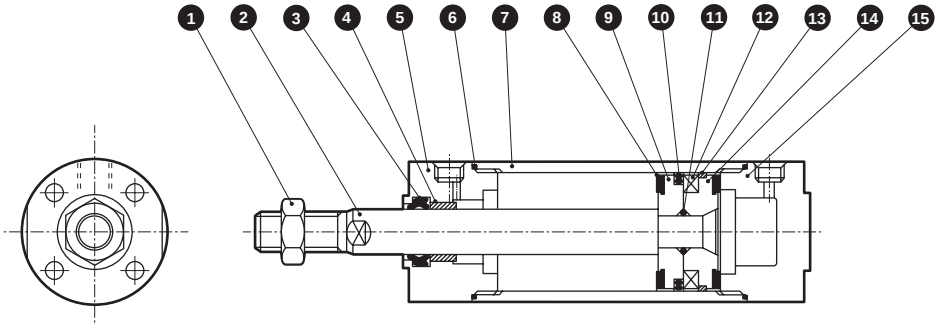

● ø50 to ø100

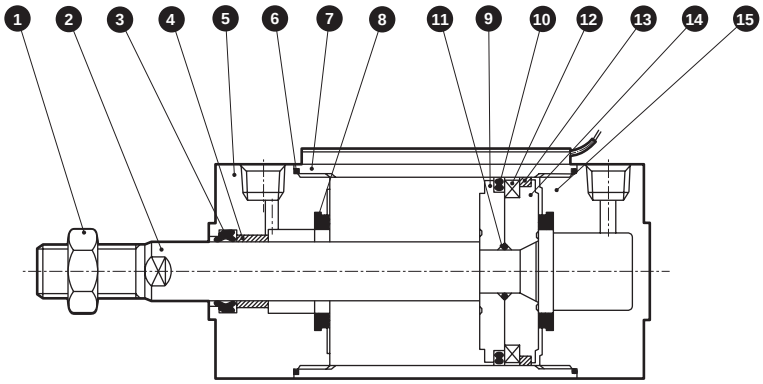

No.	Part name	Material	Remarks	No.	Part name	Material	Remarks
1	Rod nut	Steel	Nickeling	9	Piston R	ø20 to ø40: Aluminum alloy ø50 to ø100: Aluminum alloy die-casting	
2	Piston rod	ø20, ø25: Stainless steel ø32 to ø100: Steel	Industrial chrome plating	10	Piston packing	Nitrile rubber	
3	Rod packing	Nitrile rubber		11	Piston gasket	Nitrile rubber	
4	Bush	Oil impregnated bearing alloy *1		12	Magnet	Plastic	
5	Rod cover	Aluminum alloy	Hard alumite	13	Wear ring	Polyacetal resin	
6	Cylinder gasket	Nitrile rubber		14	Piston H	ø20 to ø40: Aluminum alloy ø50 to ø100: Aluminum alloy die-casting	
7	Cylinder tube	Aluminum alloy	Hard alumite				
8	Cushion rubber	Urethane rubber		15	Head cover	Aluminum alloy	Hard alumite

*1: Oil-impregnated cast iron bearing for copper and PTFE free.

Repair parts list

With rubber cushion

Bore size (mm)	Kit No.	Repair parts No.
ø 20	SCM-20DK	3 6 8 10 13
ø 25	SCM-25DK	
ø 32	SCM-32DK	
ø 40	SCM-40DK	
ø 50	SCM-50DK	
ø 63	SCM-63DK	
ø 80	SCM-80DK	
ø100	SCM-100DK	

*1: Specify the kit No. when placing an order.

Internal structure and parts list (with air cushion)

● ø20 to ø40

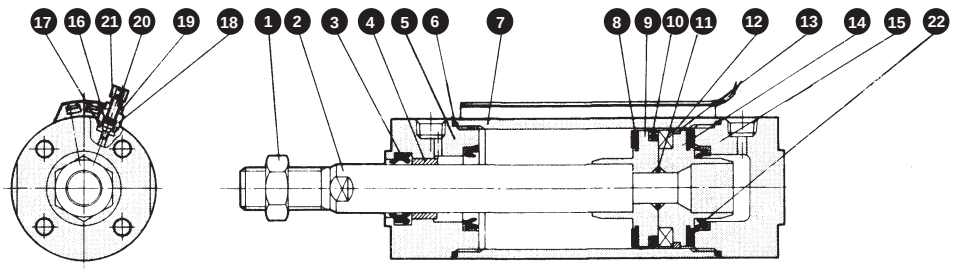

● ø50 to ø100

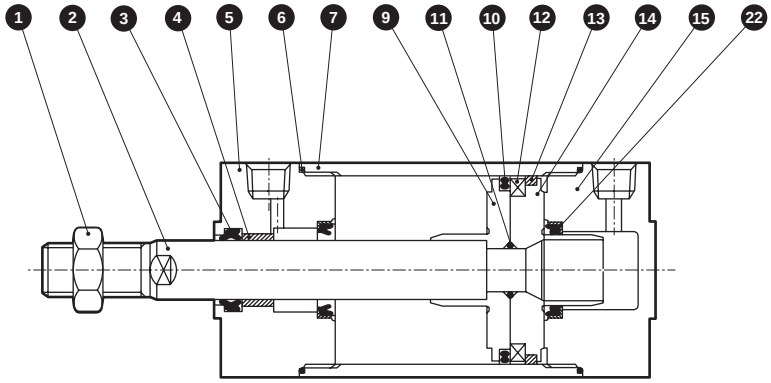

No.	Part name	Material	Remarks	No.	Part name	Material	Remarks
1	Rod nut	Steel	Nickeling	12	Magnet	Plastic	
2	Piston rod	ø20, ø25: Stainless steel ø32 to ø100: Steel	Industrial chrome plating	13	Wear ring	Polyacetal resin	
3	Rod packing	Nitrile rubber		14	Piston H	ø20 to ø40: Aluminum alloy ø50 to ø100: Aluminum alloy die-casting	
4	Bush	Oil impregnated bearing alloy *1		15	Head cover	Aluminum alloy	Hard alumite
5	Rod cover	Aluminum alloy	Hard alumite	16	Needle gasket	Nitrile rubber	
6	Cylinder gasket	Nitrile rubber		17	Holder gasket	Nitrile rubber	
7	Cylinder tube	Aluminum alloy	Hard alumite	18	Needle holder	Aluminum alloy	
8	Cushion rubber	Urethane rubber		19	Lock nut	Steel	Nickeling
9	Piston R	20 to ø40: Aluminum alloy ø50 to ø100: Aluminum alloy die-casting		20	Needle	Stainless steel	
				21	Knob	Aluminum alloy	Chromate
10	Piston packing	Nitrile rubber		22	Cushion packing	Nitrile rubber/steel	
11	Piston gasket	Nitrile rubber					

*1: Oil-impregnated cast iron bearing for copper and PTFE free.

Repair parts list

With air cushion

Bore size (mm)	Kit No.	Repair parts No.
ø 20	SCM-20BK	*2 3 6 8 10 13 16 17 22
ø 25	SCM-25BK	
ø 32	SCM-32BK	
ø 40	SCM-40BK	
ø 50	SCM-50BK	
ø 63	SCM-63BK	
ø 80	SCM-80BK	
ø100	SCM-100BK	

*1: Specify the kit No. when placing an order.
*2: 8 is not supplied with ø50 to ø100.

SCP*3
CMK2
CMA2
SCM
SCG
SCA2
SCS2
CKV2
CAV2/COVP/N2
SSD2
SSG
SSD
CAT
MDC2
MVC
SMG
MSD/MSDG
FC*
STK
SRL3
SRG3
SRM3
SRT3
MRL2
MRG2
SM-25
ShkAbs
FJ
FK
Spd Contr
Ending

dimensions CAD

● Basic (00) ø20 to ø100
[With rubber cushion]

• Switch mounting: Rail

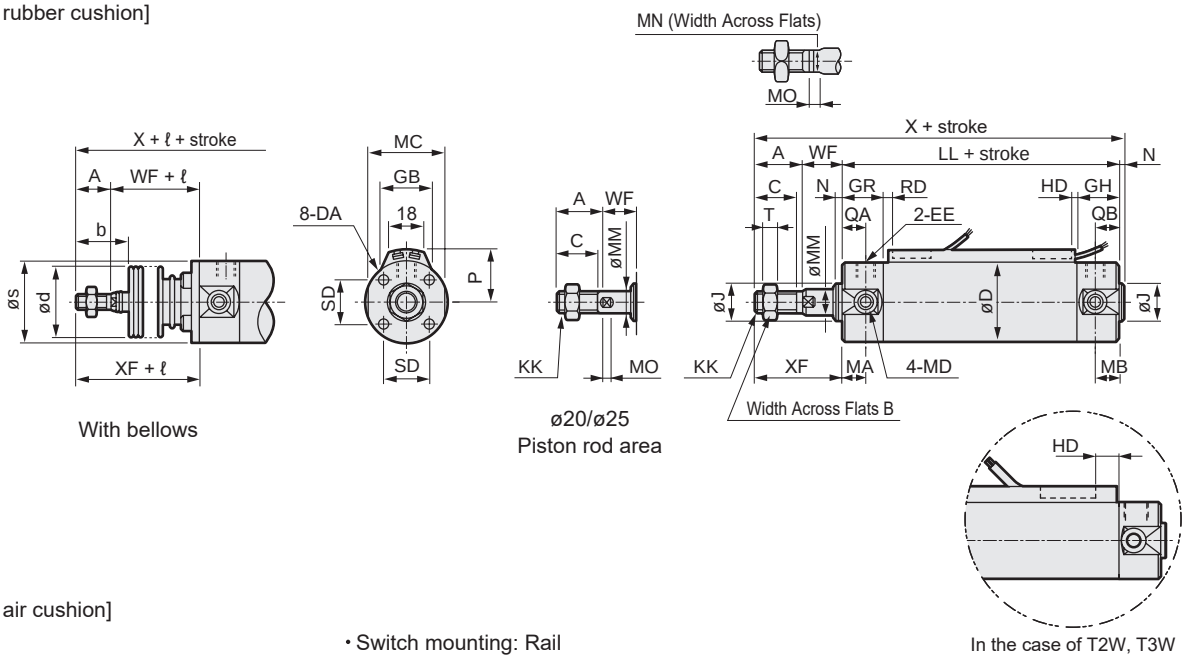

With bellows

ø20/ø25
Piston rod area

In the case of T2W, T3W

[With air cushion]

• Switch mounting: Rail

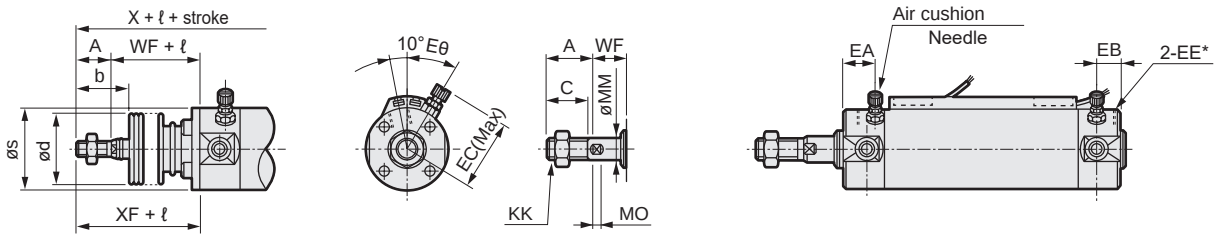

With bellows

ø20/ø25
Piston rod area

1: Piping port (EE) of ø20 and ø25 is different. Refer to the dimensions (EE) of the type with air cushion.
***2: Refer to page 345 for RD, HD and protruding dimensions of the 2-color LED, off-delay, AC magnetic field proof, T1H/V and T8H/V switches.**
***3: For the dimensions of the accessories, refer to pages 252 and 253.**

Code	Basic (00) Basic dimensions																					
Bore size (mm)	A	B	C	D	DA	EE (Note)	GH	GR	J	KK	LL	MA	MB	MC	MD	MM	MN	MO	N	QA	QB	SD
ø 20	18	13	16	26	M4 depth 6.5	Rc1/8	17	19	12	M8	69	11	11	24	M5	8	6	4	2	12	10	14
ø 25	22	17	20	31	M5 depth 6.5	Rc1/8	17	19	14	M10×1.25	69	11	11	29	M6	10	8	5	2	12	10	16.5
ø 32	22	17	20	38	M5 depth 7.5	Rc1/8	17	19	18	M10×1.25	71	11	10	36	M8	12	10	5.5	2	12	10	20
ø 40	30	22	27	47	M6 depth 12	Rc1/8	19	20	25	M14×1.5	78	12	10	44	M10	16	14	6	2	13	12	26
ø 50	35	27	32	58	M8 depth 16	Rc1/4	22	25	30	M18×1.5	90	13	12	55	M12	20	17	8	2	15	12	32
ø 63	35	27	32	72	M10 depth 16	Rc1/4	22	25	32	M18×1.5	90	13	12	69	M14	20	17	8	2	15	12	38
ø 80	40	32	37	89	M10 depth 22	Rc3/8	28	28	40	M22×1.5	108	–	–	80	–	25	22	11	3	15	15	50
ø100	40	41	37	110	M12 depth 22	Rc1/2	28	28	50	M26×1.5	108	–	–	100	–	30	27	13	3	15	15	60

Code					With bellows				With air cushion					Switch mounting: Rail								
Bore size (mm)	T	WF	X	XF	b	d	s	ℓ	EA	EB	EC	EE* (Note)	Eθ	P	GB	HD			RD			
																T0/T5	T2/T2R T3/T3P	T2W T3W	T0/T5	T2/T2R T3/T3P	T2W T3W
ø 20	5	17	106	35	30	30	25.7	(stroke/3) + 18.5	14	12	27	M5	30°	19.5	23	3.0	6.5	8.5	7.5	7.5	9.5
ø25	6	18	111	40	35	30	30.7	(stroke/3) + 20.5	14	12	29.5	M5	30°	22	24.4	2.0	5.5	7.5	8.5	8.5	10.5
ø32	6	18	113	40	31.5	35	37.7	(stroke/3) + 19	14	12	32.8	Rc1/8	25°	25.5	25	3.0	6.5	8.5	9.5	9.5	11.5
ø40	8	20	130	50	40	35	46.7	(stroke/3) + 18.5	15	14	36.6	Rc1/8	20°	30	25.7	5.0	8.5	10.5	11.5	11.5	13.5
ø50	11	23	150	58	46	40	57.7	(stroke/3.6) + 18.5	18.5	15.5	43	Rc1/4	20°	35.5	26.2	7.5	11.0	13.0	13.0	13.0	15.0
ø63	11	23	150	58	46	40	71.7	(stroke/3.6) + 18.5	18.5	15.5	50	Rc1/4	20°	42.5	26.5	7.5	11.0	13.0	13.0	13.0	15.0
ø80	13	31	182	71	55	50	88.7	(stroke/4.3) + 14.5	20	20	58.5	Rc3/8	20°	51	26.7	9.5	13.0	15.0	20.0	20.0	22.0
ø100	16	31	182	71	56	60	109.7	(stroke/4.5) + 21	20	20	69	Rc1/2	20°	61.5	26.7	10.0	13.5	15.5	19.5	19.5	21.5

Dimensions

● Basic (00) ø20 to ø100
[With rubber cushion]

· Switch mounting: Band

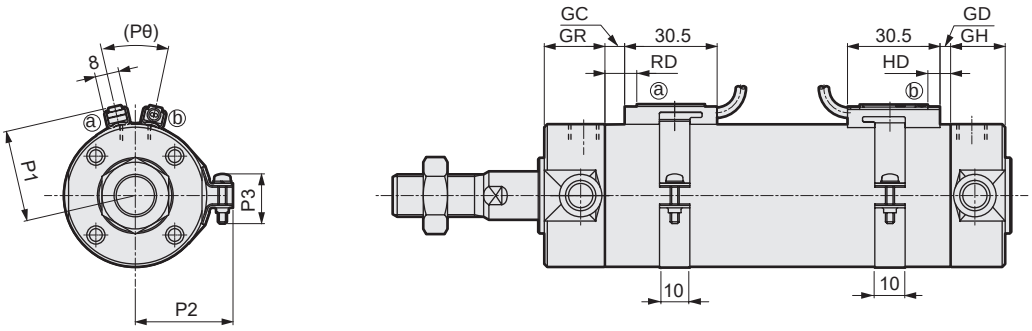

[With air cushion]

· Switch mounting: Band

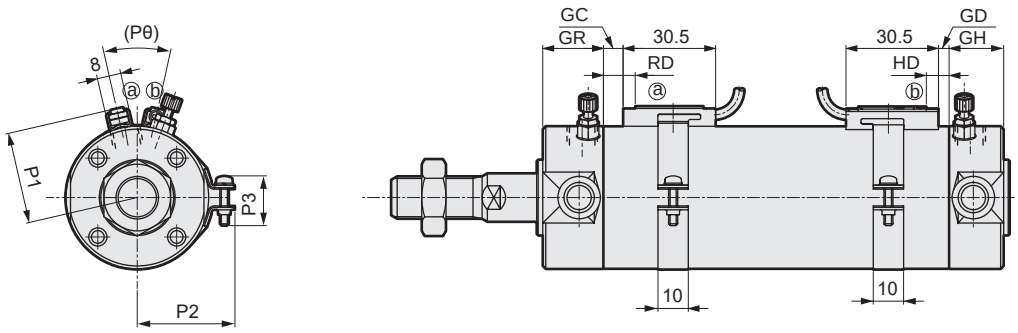

*1: Refer to page 345 for RD, HD and protruding dimensions of the 2-color LED, off-delay, AC magnetic field proof, T1H/V and T8H/V switches.
*2: For the dimensions of the accessories, refer to pages 252 and 253.

Code	Switch mounting: Band																	
Bore size (mm)	GD			GC			GH	GR	HD			RD			P1	P2	P3	Pθ
	T0/T5	T2, T3	T2W T3W	T0/T5	T2, T3	T2W T3W			T0/T5	T2, T3	T2W T3W	T0/T5	T2, T3	T2W T3W				
ø 20	2.5	2.5	4.5	3.5	3.5	5.5	17	19	6.5	6.5	8.5	7.5	7.5	9.5	19.6	21.5	14	(38°)
ø 25	1.5	1.5	3.5	4.5	4.5	6.5	17	19	5.5	5.5	7.5	8.5	8.5	10.5	22.1	23.9	14	(34°)
ø 32	2.5	2.5	4.5	5.5	5.5	7.5	17	19	6.5	6.5	8.5	9.5	9.5	11.5	25.6	27.6	16	(30°)
ø 40	4.5	4.5	6.5	7.5	7.5	9.5	19	20	8.5	8.5	10.5	11.5	11.5	13.5	30.2	32.1	16	(26°)
ø 50	7.0	7.0	9.0	9.0	9.0	11.0	22	25	11.0	11.0	13.0	13.0	13.0	15.0	35.7	37.4	16	(22°)
ø 63	7.0	7.0	9.0	9.0	9.0	11.0	22	25	11.0	11.0	13.0	13.0	13.0	15.0	42.7	44.4	16	(20°)
ø 80	9.0	9.0	11.0	16.0	16.0	18.0	28	28	13.0	13.0	15.0	20.0	20.0	22.0	51.2	53.0	16	(16°)
ø100	9.5	9.5	11.5	15.5	15.5	17.5	28	28	13.5	13.5	15.5	19.5	19.5	21.5	61.7	63.5	16	(16°)

SCP*3
CMK2
CMA2
SCM
SCG
SCA2
SCS2
CKV2
CAV2/COVP/N2
SSD2
SSG
SSD
CAT
MDC2
MVC
SMG
MSD/MSDG
FC*
STK
SRL3
SRG3
SRM3
SRT3
MRL2
MRG2
SM-25
ShkAbs
FJ
FK
Spd Contr
Ending

dimensions

● Axial foot (LB)

• Switch mounting: Rail

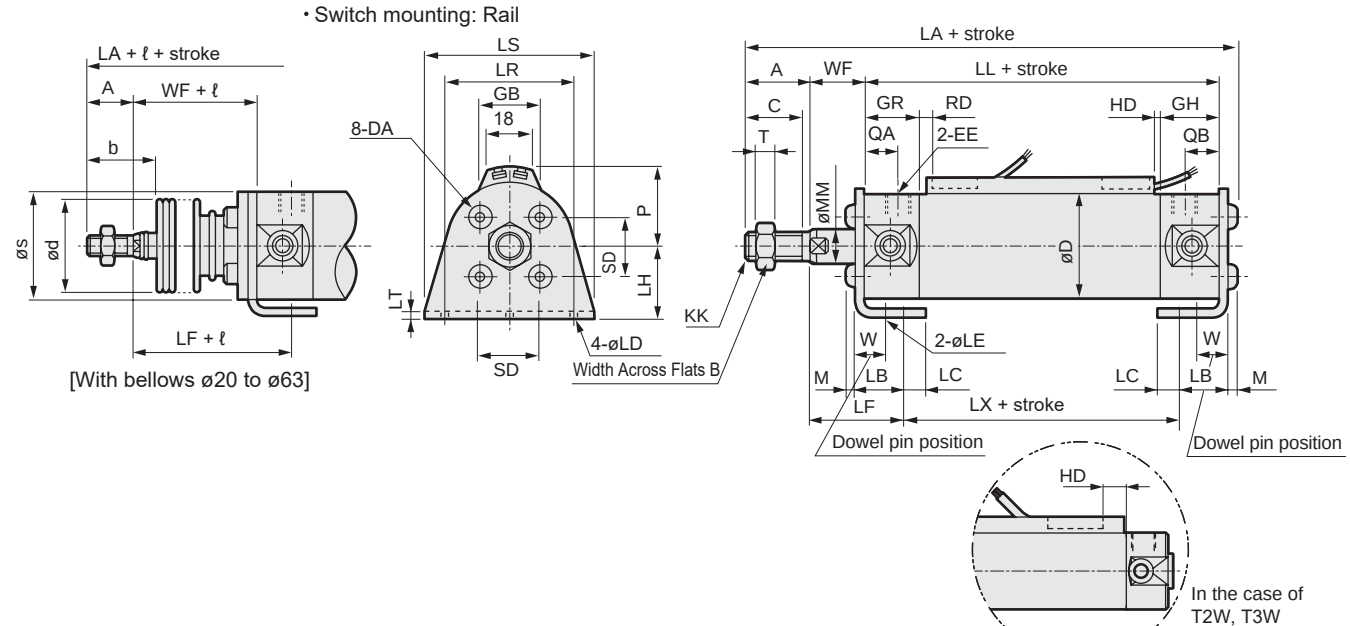

• Switch mounting: Band

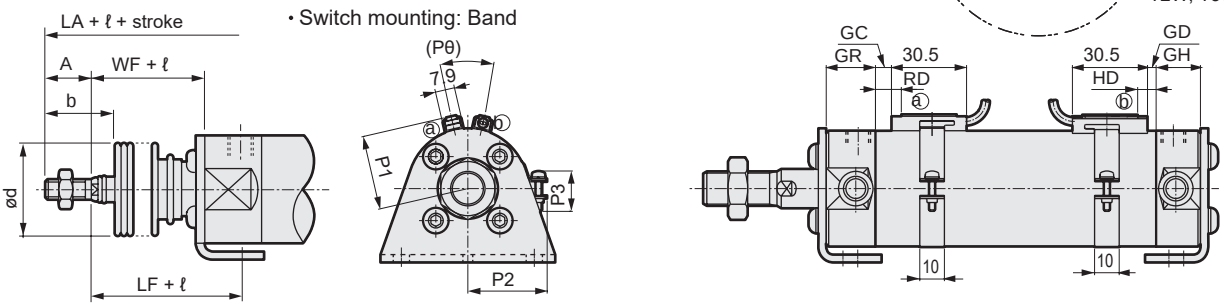

Code	Axial foot (LB) Basic dimensions																						
Bore size (mm)	A	B	C	D	DA	EE (*1)	GH	GR	KK	LA	LB	LC	LD	LE	LF	LH	LL	LR	LS	LT	LX	M	MM
ø 20	18	13	16	26	M4	Rc1/8	17	19	M8	109.8	15.1	7.1	5.7	4	28.9	20	69	32	44	3.2	45.2	2.6	8
ø25	22	17	20	31	M5	Rc1/8	17	19	M 10 x 1.25	115.6	15.1	7.1	5.7	4	29.9	22	69	36	49	3.2	45.2	3.4	10
ø32	22	17	20	38	M5	Rc1/8	17	19	M 10 x 1.25	117.6	16.1	8.1	6.8	4	30.9	25	71	44	58	3.2	45.2	3.4	12
ø40	30	22	27	47	M6	Rc1/8	19	20	M 14 x 1.5	135.2	16.6	9.1	6.8	4	33.4	30	78	54	71	3.2	51.2	4	16
ø50	35	27	32	58	M8	Rc1/4	22	25	M 18 x 1.5	157.5	22	11	9	5	40.5	40	90	66	86	4.5	55	5	20
ø63	35	27	32	72	M10	Rc1/4	22	25	M 18 x 1.5	157.5	22	13	11	5	40.5	45	90	82	106	4.5	55	5	20
ø80	40	32	37	89	M10	Rc3/8	28	28	M 22 x 1.5	189.5	28.5	14	11	6	55	55	108	100	125	4.5	60	6	25
ø100	40	41	37	110	M12	Rc1/2	28	28	M 26 x 1.5	192	30	16	14	6	55	65	108	120	150	6	60	7	30

Code							With bellows				Switch mounting: Rail								Switch mounting: Band					
Bore size (mm)	QA	QB	SD	T	W	WF	b	d	s	ℓ	P	GB	HD			RD			GD			GC		
													T0/T5	T2/T2R T3/T3P	T2W T3W	T0/T5	T2/T2R T3/T3P	T2W T3W	T0/T5	T2,T3	T2W T3W	T0/T5	T2,T3	T2W T3W
ø 20	12	10	14	5	10	17	30	30	25.7	(Stroke/3) + 18.5	19.5	23	3.0	6.5	8.5	7.5	7.5	9.5	2.5	2.5	4.5	3.5	3.5	5.5
ø 25	12	10	16.5	6	10	18	35	30	30.7	(Stroke/3) + 20.5	22	24.4	2.0	5.5	7.5	8.5	8.5	10.5	1.5	1.5	3.5	4.5	4.5	6.5
ø 32	12	10	20	6	10	18	31.5	35	37.7	(Stroke/3) + 19	25.5	25	3.0	6.5	8.5	9.5	9.5	11.5	2.5	2.5	4.5	5.5	5.5	7.5
ø 40	13	12	26	8	10	20	40	35	46.7	(Stroke/3) + 18.5	30	25.7	5.0	8.5	10.5	11.5	11.5	13.5	4.5	4.5	6.5	7.5	7.5	9.5
ø 50	15	12	32	11	17.5	23	46	40	57.7	(Stroke/3.6) + 18.5	35.5	26.2	7.5	11.0	13.0	13.0	13.0	15.0	7.0	7.0	9.0	9.0	9.0	11.0
ø 63	15	12	38	11	17.5	23	46	40	71.7	(Stroke/3.6) + 18.5	42.5	26.5	7.5	11.0	13.0	13.0	13.0	15.0	7.0	7.0	9.0	9.0	9.0	11.0
ø 80	15	15	50	13	20	31	55	50	–	(Stroke/4.3) + 14.5	51	26.7	9.5	13.0	15.0	20.0	20.0	22.0	9.0	9.0	11.0	16.0	16.0	18.0
ø100	15	15	60	16	20	31	56	60	–	(Stroke/4.5) + 21	61.5	26.7	10.0	13.5	15.5	19.5	19.5	21.5	9.5	9.5	11.5	15.5	15.5	17.5

Code										
Bore size (mm)	HD			RD			P1	P2	P3	Pθ
	T0/T5	T2,T3	T2W T3W	T0/T5	T2,T3	T2W T3W				
ø 20	6.5	6.5	8.5	7.5	7.5	9.5	19.6	21.5	14	(38°)
ø25	5.5	5.5	7.5	8.5	8.5	10.5	22.1	23.9	14	(34°)
ø32	6.5	6.5	8.5	9.5	9.5	11.5	25.6	27.6	16	(30°)
ø40	8.5	8.5	10.5	11.5	11.5	13.5	30.2	32.1	16	(26°)
ø50	11.0	11.0	13.0	13.0	13.0	15.0	35.7	37.4	16	(22°)
ø63	11.0	11.0	13.0	13.0	13.0	15.0	42.7	44.4	16	(20°)
ø80	13.0	13.0	15.0	20.0	20.0	22.0	51.2	53.0	16	(16°)
ø100	13.5	13.5	15.5	19.5	19.5	21.5	61.7	63.5	16	(16°)

***1: Needle relational dimensions and port sizes of the type with air cushion are the same as those of the basic. Refer to pages 238 and 239. (Those of ø20/ø25 are different from the basic.)**

***2: Refer to page 345 for RD, HD and protruding dimensions of the 2-color LED, off-delay, AC magnetic field proof, T1H/V and T8H/V switches.**

***3: For the dimensions of the accessories, refer to pages 252 and 253.**

dimensions

● Rod side flange (FA)

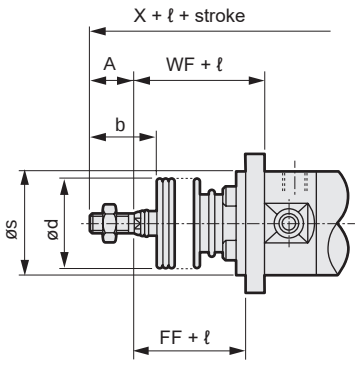

[With bellows ø20 to ø63]

• Switch mounting: Rail

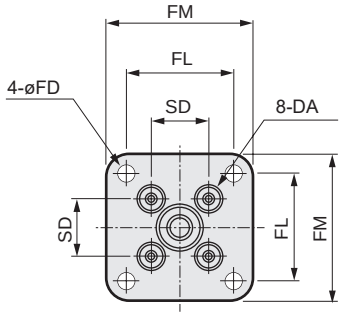

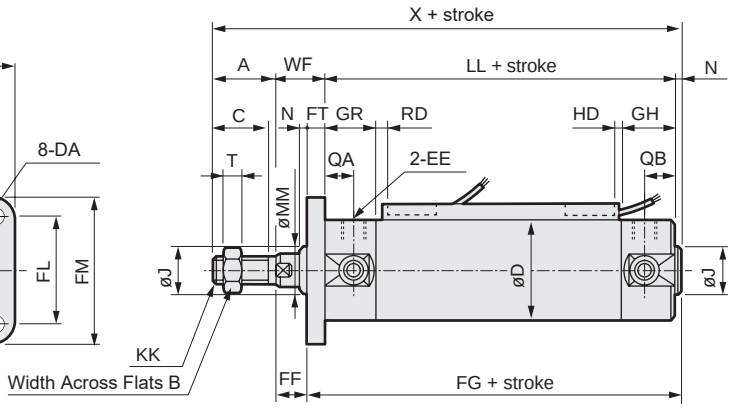

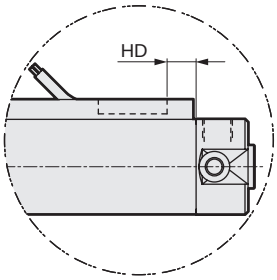

In the case of T2W, T3W

• Switch mounting: Band

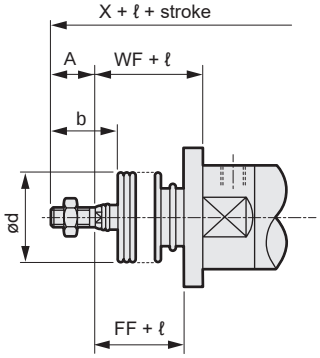

[With bellows ø80/ø100]

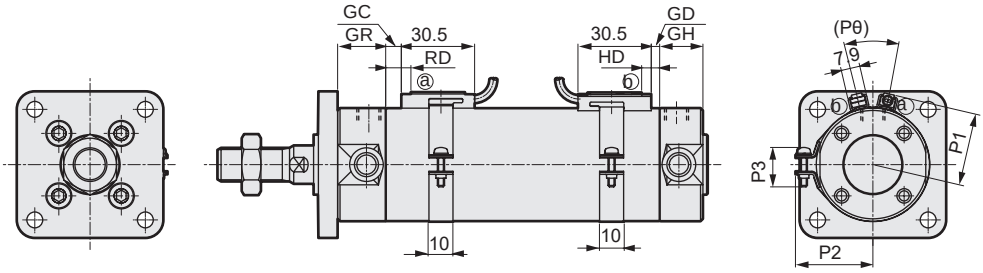

***1: Needle relational dimensions and port sizes of the type with air cushion are the same as those of the basic. Refer to pages 238 and 239. (Those of ø20/ø25 are different from the basic.)**
***2: Refer to page 345 for RD, HD and protruding dimensions of the 2-color LED, off-delay, AC magnetic field proof, T1H/V and T8H/V switches.**
***3: For the dimensions of the accessories, refer to pages 252 and 253.**

Code / Bore size (mm)	Rod side flange (FA) Basic dimensions																							
	A	B	C	D	DA	EE (*1)	FD	FF	FG	FL	FM	FT	GH	GR	J	KK	LL	MM	N	QA	QB	SD	T	WF	X
ø 20	18	13	16	26	M4	Rc1/8	5.5	11	77	28	40	6	17	19	12	M8	69	8	2	12	10	14	5	17	106
ø25	22	17	20	31	M5	Rc1/8	5.5	11	78	32	44	7	17	19	14	M 10 x 1.25	69	10	2	12	10	16.5	6	18	111
ø32	22	17	20	38	M5	Rc1/8	6.6	11	80	38	53	7	17	19	18	M 10 x 1.25	71	12	2	12	10	20	6	18	113
ø40	30	22	27	47	M6	Rc1/8	6.6	12	88	46	61	8	19	20	25	M 14 x 1.5	78	16	2	13	12	26	8	20	130
ø50	35	27	32	58	M8	Rc1/4	9	14	101	58	76	9	22	25	30	M 18 x 1.5	90	20	2	15	12	32	11	23	150
ø63	35	27	32	72	M10	Rc1/4	11	14	101	70	92	9	22	25	32	M 18 x 1.5	90	20	2	15	12	38	11	23	150
ø80	40	32	37	89	M10	Rc3/8	11	20	122	82	104	11	28	28	40	M 22 x 1.5	108	25	3	15	15	50	13	31	182
ø100	40	41	37	110	M12	Rc1/2	13	17	125	100	128	14	28	28	50	M 26 x 1.5	108	30	3	15	15	60	16	31	182

Code / Bore size (mm)	With bellows				Switch mounting: Rail						Switch mounting: Band															
					HD			RD			GD			GC			HD			RD			P1	P2	P3	Pθ
	b	d	s	ℓ	T0/T5	T2/T2R T3/T3P	T2W T3W	T0/T5	T2/T2R T3/T3P	T2W T3W	T0/T5	T2,T3	T2W T3W	T0/T5	T2,T3	T2W T3W	T0/T5	T2,T3	T2W T3W	T0/T5	T2,T3	T2W T3W				
ø 20	30	30	25.7	(stroke/3)+18.5	3.0	6.5	8.5	7.5	7.5	9.5	2.5	2.5	4.5	3.5	3.5	5.5	6.5	6.5	8.5	7.5	7.5	9.5	19.6	21.5	14	(38)
ø25	35	30	30.7	(stroke/3) + 20.5	2.0	5.5	7.5	8.5	8.5	10.5	1.5	1.5	3.5	4.5	4.5	6.5	5.5	5.5	7.5	8.5	8.5	10.5	22.1	23.9	14	(34)
ø32	31.5	35	37.7	(stroke/3) + 19	3.0	6.5	8.5	9.5	9.5	11.5	2.5	2.5	4.5	5.5	5.5	7.5	6.5	6.5	8.5	9.5	9.5	11.5	25.6	27.6	16	(30)
ø40	40	35	46.7	(stroke/3) + 18.5	5.0	8.5	10.5	11.5	11.5	13.5	4.5	4.5	6.5	7.5	7.5	9.5	8.5	8.5	10.5	11.5	11.5	13.5	30.2	32.1	16	(26)
ø50	46	40	57.7	(stroke/3.6) + 18.5	7.5	11.0	13.0	13.0	13.0	15.0	7.0	7.0	9.0	9.0	9.0	11.0	11.0	11.0	13.0	13.0	13.0	15.0	35.7	37.4	16	(22)
ø63	46	40	71.7	(stroke/3.6) + 18.5	7.5	11.0	13.0	13.0	13.0	15.0	7.0	7.0	9.0	9.0	9.0	11.0	11.0	11.0	13.0	13.0	13.0	15.0	42.7	44.4	16	(20)
ø80	55	50	-	(stroke/4.3) + 14.5	9.5	13.0	15.0	20.0	20.0	22.0	9.0	9.0	11.0	16.0	16.0	18.0	13.0	13.0	15.0	20.0	20.0	22.0	51.2	53.0	16	(16)
ø100	56	60	-	(stroke/4.5) + 21	10.0	13.5	15.5	19.5	19.5	21.5	9.5	9.5	11.5	15.5	15.5	17.5	13.5	13.5	15.5	19.5	19.5	21.5	61.7	63.5	16	(16)

SCP*3
CMK2
CMA2
SCM
SCG
SCA2
SCS2
CKV2
CAV2/ COVP/N2
SSD2
SSG
SSD
CAT
MDC2
MVC
SMG
MSD/ MSDG
FC*
STK
SRL3
SRG3
SRM3
SRT3
MRL2
MRG2
SM-25
ShkAbs
FJ
FK
Spd Contr
Ending

dimensions CAD

● Head side flange FB

• Switch mounting: Rail

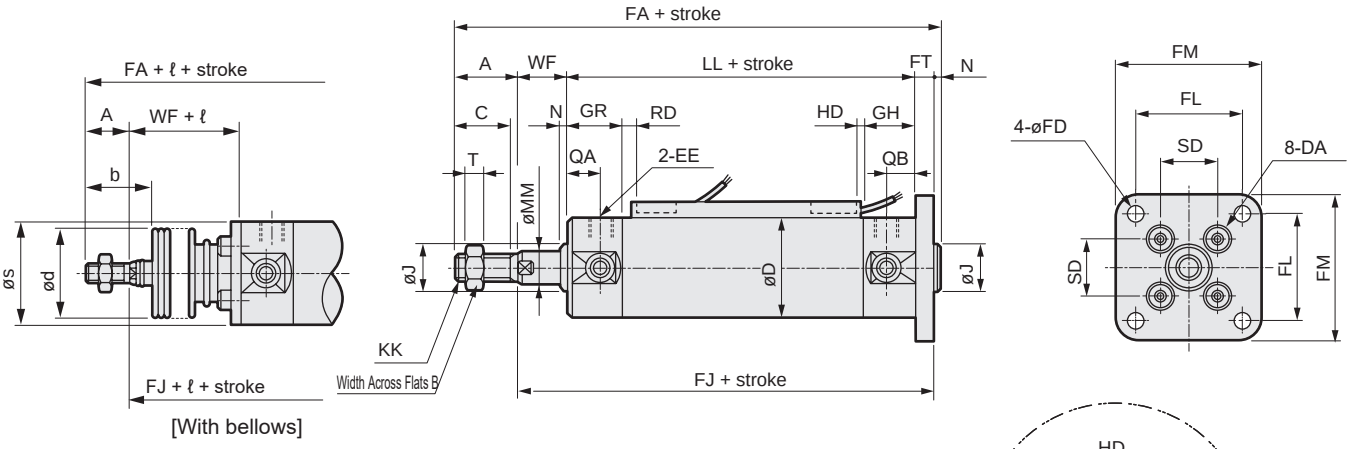

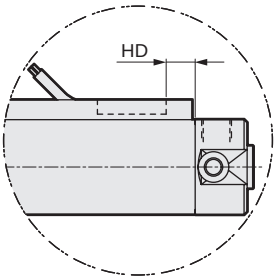

In the case of T2W, T3W

• Switch mounting: Band

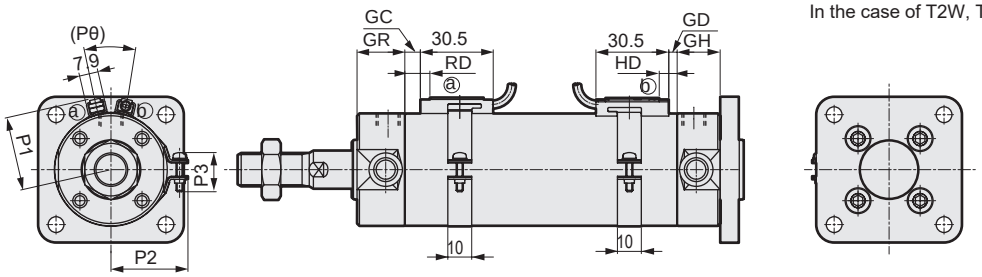

***1: Needle relational dimensions and port sizes of the type with air cushion are the same as those of the basic. Refer to pages 238 and 239. (Those of ø20/ø25 are different from the basic.)**
***2: Refer to page 345 for RD, HD and protruding dimensions of the 2-color LED, off-delay, AC magnetic field proof, T1H/V and T8H/V switches.**
***3: For the dimensions of the accessories, refer to pages 252 and 253.**

Code / Bore size (mm)	Rod side flange (FB) Basic dimensions																								
	A	B	C	D	DA	EE (*1)	FA	FD	FJ	FL	FM	FT	GH	GR	J	KK	LL	MM	N	QA	QB	SD	T	WF	b
ø 20	18	13	16	26	M4	Rc1/8	112	5.5	92	28	40	6	17	19	12	M8	69	8	2	12	10	14	5	17	30
ø 25	22	17	20	31	M5	Rc1/8	118	5.5	94	32	44	7	17	19	14	M10×1.25	69	10	2	12	10	16.5	6	18	35
ø 32	22	17	20	38	M5	Rc1/8	120	6.6	96	38	53	7	17	19	18	M10×1.25	71	12	2	12	10	20	6	18	31.5
ø 40	30	22	27	47	M6	Rc1/8	138	6.6	106	46	61	8	19	20	25	M14×1.5	78	16	2	13	12	26	8	20	40
ø 50	35	27	32	58	M8	Rc1/4	159	9	122	58	76	9	22	25	30	M18×1.5	90	20	2	15	12	32	11	23	46
ø 63	35	27	32	72	M10	Rc1/4	159	11	122	70	92	9	22	25	32	M18×1.5	90	20	2	15	12	38	11	23	46
ø 80	40	32	37	89	M10	Rc3/8	193	11	150	82	104	11	28	28	40	M22×1.5	108	25	3	15	15	50	13	31	55
ø100	40	41	37	110	M12	Rc1/2	196	13	153	100	128	14	28	28	50	M26×1.5	108	30	3	15	15	60	16	31	56

Code / Bore size (mm)	With bellows			Switch mounting: Rail						Switch mounting: Band															
	d	s	ℓ	HD			RD			GD			GC			HD			RD			P1	P2	P3	Pθ
				T0/T5	T2/T2R T3/T3P	T2W T3W	T0/T5	T2/T2R T3/T3P	T2W T3W	T0/T5	T2,T3	T2W T3W	T0/T5	T2,T3	T2W T3W	T0/T5	T2,T3	T2W T3W	T0/T5	T2,T3	T2W T3W				
ø 20	30	25.7	(stroke/3) + 18.5	3.0	6.5	8.5	7.5	7.5	9.5	2.5	2.5	4.5	3.5	3.5	5.5	6.5	6.5	8.5	7.5	7.5	9.5	19.6	21.5	14	(38)
ø25	30	30.7	(stroke/3) + 20.5	2.0	5.5	7.5	8.5	8.5	10.5	1.5	1.5	3.5	4.5	4.5	6.5	5.5	5.5	7.5	8.5	8.5	10.5	22.1	23.9	14	(34)
ø32	35	37.7	(stroke/3) + 19	3.0	6.5	8.5	9.5	9.5	11.5	2.5	2.5	4.5	5.5	5.5	7.5	6.5	6.5	8.5	9.5	9.5	11.5	25.6	27.6	16	(30)
ø40	35	46.7	(stroke/3) + 18.5	5.0	8.5	10.5	11.5	11.5	13.5	4.5	4.5	6.5	7.5	7.5	9.5	8.5	8.5	10.5	11.5	11.5	13.5	30.2	32.1	16	(26)
ø50	40	57.7	(stroke/3.6) + 18.5	7.5	11.0	13.0	13.0	13.0	15.0	7.0	7.0	9.0	9.0	9.0	11.0	11.0	11.0	13.0	13.0	13.0	15.0	35.7	37.4	16	(22)
ø63	40	71.7	(stroke/3.6) + 18.5	7.5	11.0	13.0	13.0	13.0	15.0	7.0	7.0	9.0	9.0	9.0	11.0	11.0	11.0	13.0	13.0	13.0	15.0	42.7	44.4	16	(20)
ø80	50	88.7	(stroke/4.3) + 14.5	9.5	13.0	15.0	20.0	20.0	22.0	9.0	9.0	11.0	16.0	16.0	18.0	13.0	13.0	15.0	20.0	20.0	22.0	51.2	53.0	16	(16)
ø100	60	109.7	(stroke/4.5) + 21	10.0	13.5	15.5	19.5	19.5	21.5	9.5	9.5	11.5	15.5	15.5	17.5	13.5	13.5	15.5	19.5	19.5	21.5	61.7	63.5	16	(16)

MEMO

SCP*3
CMK2
CMA2
SCM
SCG
SCA2
SCS2
CKV2
CAV2/COVP/N2
SSD2
SSG
SSD
CAT
MDC2
MVC
SMG
MSD/MSDG
FC*
STK
SRL3
SRG3
SRM3
SRT3
MRL2
MRG2
SM-25
ShkAbs
FJ
FK
Spd Contr
Ending

Dimensions (ø20 to ø63)

CAD

● Eye bracket (CA)

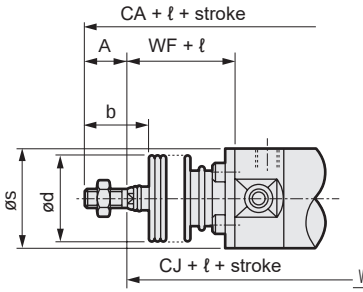

[With bellows]

• Switch mounting: Rail

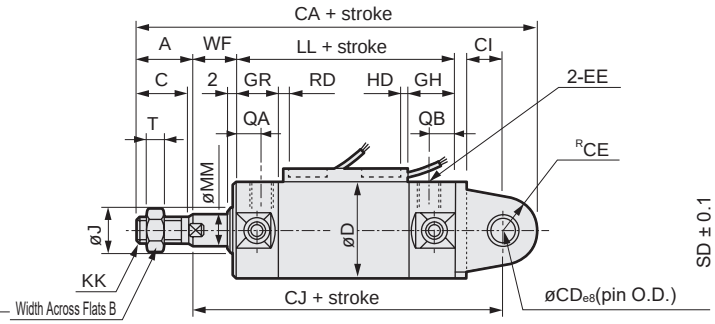

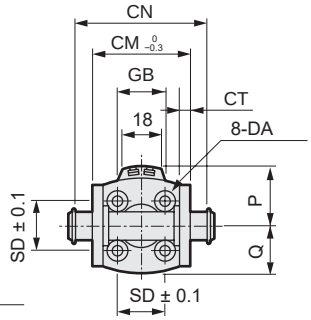

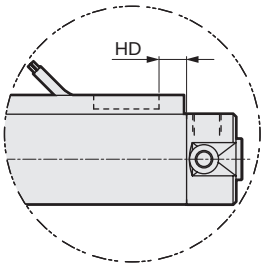

In the case of T2W, T3W

• Switch mounting: Band

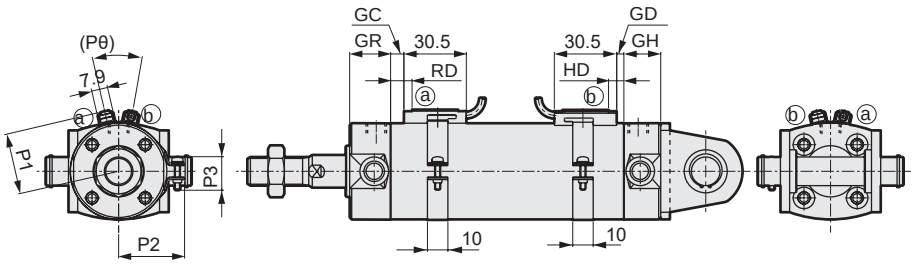

Code	Eye bracket (CA) Basic dimensions																					
Bore size (mm)	A	B	C	CA	CD	CE	CT	CI	CJ	CM	CN	D	DA	EE (*1)	GH	GR	J	KK	LL	MM	Q
ø20	18	13	16	129	8	11	3.2	10.8	100	29	38.6	26	M4	Rc1/8	17	19	12	M8	69	8	13
ø25	22	17	20	138	10	13	3.2	12.8	103	33	42.6	31	M5	Rc1/8	17	19	14	M10×1.25	69	10	15.5
ø32	22	17	20	145.5	12	15	4.5	15.5	108.5	40	54	38	M5	Rc1/8	17	19	18	M10×1.25	71	12	19
ø40	30	22	27	167.5	14	18	4.5	17.5	119.5	49	65	47	M6	Rc1/8	19	20	25	M14×1.5	78	16	23.5
ø50	35	27	32	192.5	16	20	6	19	137.5	60	79.6	58	M8	Rc1/4	22	25	30	M18×1.5	90	20	29
ø63	35	27	32	199.5	18	22	8	22	142.5	74	97.8	72	M10	Rc1/4	22	25	32	M18×1.5	90	20	36

Code						With bellows				Switch mounting: Rail									Switch mounting: Band					
Bore size (mm)	QA	QB	SD	T	WF	b	d	s	ℓ	P	GB	HD			RD			GD			GC		
												T0/T5	T2/T2R T3/T3P	T2W T3W	T0/T5	T2/T2R T3/T3P	T2W T3W	T0/T5	T2, T3	T2W T3W	T0/T5	T2, T3	T2W T3W
ø20	12	10	14	5	17	30	30	25.7	(Stroke/3) + 18.5	19.5	23	3.0	6.5	8.5	7.5	7.5	9.5	2.5	2.5	4.5	3.5	3.5	5.5
ø25	12	10	16.5	6	18	35	30	30.7	(Stroke/3) + 20.5	22	24.4	2.0	5.5	7.5	8.5	8.5	10.5	1.5	1.5	3.5	4.5	4.5	6.5
ø32	12	10	20	6	18	31.5	35	37.7	(Stroke/3) + 19	25.5	25	3.0	6.5	8.5	9.5	9.5	11.5	2.5	2.5	4.5	5.5	5.5	7.5
ø40	13	12	26	8	20	40	35	46.7	(Stroke/3) + 18.5	30	25.7	5.0	8.5	10.5	11.5	11.5	13.5	4.5	4.5	6.5	7.5	7.5	9.5
ø50	15	12	32	11	23	46	40	57.7	(Stroke/3.6) + 18.5	35.5	26.2	7.5	11.0	13.0	13.0	13.0	15.0	7.0	7.0	9.0	9.0	9.0	11.0
ø63	15	12	38	11	23	46	40	71.7	(Stroke/3.6) + 18.5	42.5	26.5	7.5	11.0	13.0	13.0	13.0	15.0	7.0	7.0	9.0	9.0	9.0	11.0

Code	Switch mounting: Band									
Bore size (mm)	HD			RD			P1	P2	P3	Pθ
	T0/T5	T2,T3	T2W T3W	T0/T5	T2,T3	T2W T3W				
ø20	6.5	6.5	8.5	7.5	7.5	9.5	19.6	21.5	14	(38)
ø25	5.5	5.5	7.5	8.5	8.5	10.5	22.1	23.9	14	(34)
ø32	6.5	6.5	8.5	9.5	9.5	11.5	25.6	27.6	16	(30)
ø40	8.5	8.5	10.5	11.5	11.5	13.5	30.2	32.1	16	(26)
ø50	11.0	11.0	13.0	13.0	13.0	15.0	35.7	37.4	16	(22)
ø63	11.0	11.0	13.0	13.0	13.0	15.0	42.7	44.4	16	(20)

***1: Needle relational dimensions and port sizes of the type with air cushion are the same as those of the basic. Refer to pages 238 and 239. (Those of ø20/ø25 are different from the basic.)**
***2: Refer to page 345 for RD, HD and protruding dimensions of the 2-color LED, off-delay, AC magnetic field proof, T1H/V and T8H/V switches.**
***3: For the dimensions of the accessories, refer to pages 252 and 253.**

Dimensions (ø20 to ø63)

CAD

● Eye bracket (CA) with bracket (option code B2)

• Switch mounting: Rail

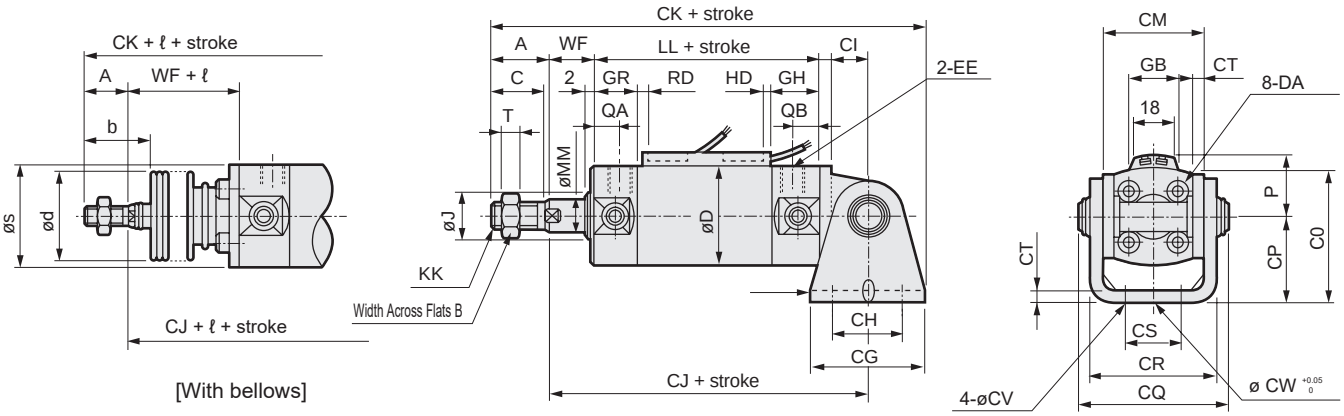

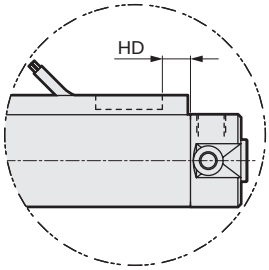

In the case of T2W, T3W

• Switch mounting: Band

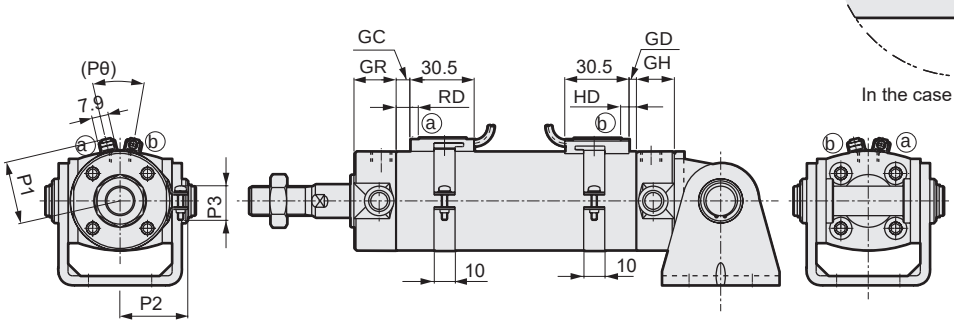

Code	Eye bracket (CA) with bracket (option code B2) Basic dimensions																							
Bore size (mm)	A	B	C	CG	CH	CI	CJ	CK	CM	CO	CP	CQ	CR	CS	CT	CV	CW	D	DA	EE (*1)	GH	GR	J	KK
ø20	18	13	16	42	28	10.8	100	139	29	38	25	43.4	35.8	16	3.2	5.5	10	26	M4	Rc1/8	17	19	12	M8
ø25	22	17	20	42	28	12.8	103	146	33	45.5	30	48	39.8	20	3.2	5.5	10	31	M5	Rc1/8	17	19	14	M 10 x 1.25
ø32	22	17	20	48	28	15.5	108.5	154.5	40	54	35	59.4	49.4	22	4.5	6.6	10	38	M5	Rc1/8	17	19	18	M 10 x 1.25
ø40	30	22	27	56	30	17.5	119.5	177.5	49	63.5	40	71.4	58.4	30	4.5	6.6	10	47	M6	Rc1/8	19	20	25	M 14 x 1.5
ø50	35	27	32	64	36	19	137.5	204.5	60	79	50	86	72.4	36	6	9	20	58	M8	Rc1/4	22	25	30	M 18 x 1.5
ø63	35	27	32	74	46	22	142.5	214.5	74	96	60	105.4	90.4	46	8	11	20	72	M10	Rc1/4	22	25	32	M 18 x 1.5

Code							With bellows				Switch mounting: Rail									Switch mounting: Band					
Bore size (mm)	LL	MM	QA	QB	T	WF	b	d	s	ℓ	P	GB	HD			RD				GD			GC		
													T0/T5	T2/T2R T3/T3P	T2W T3W	T0/T5	T2/T2R T3/T3P	T2W T3W	T0/T5	T2, T3	T2W T3W	T0/T5	T2, T3	T2W T3W
ø20	69	8	12	10	5	17	30	30	25.7	(Stroke/3) + 18.5	19.5	23	3.0	6.5	8.5	7.5	7.5	9.5	2.5	2.5	4.5	3.5	3.5	5.5
ø25	69	10	12	10	6	18	35	30	30.7	(Stroke/3) + 20.5	22	24.4	2.0	5.5	7.5	8.5	8.5	10.5	1.5	1.5	3.5	4.5	4.5	6.5
ø32	71	12	12	10	6	18	31.5	35	37.7	(Stroke/3) + 19	25.5	25	3.0	6.5	8.5	9.5	9.5	11.5	2.5	2.5	4.5	5.5	5.5	7.5
ø40	78	16	13	12	8	20	40	35	46.7	(Stroke/3) + 18.5	30	25.7	5.0	8.5	10.5	11.5	11.5	13.5	4.5	4.5	6.5	7.5	7.5	9.5
ø50	90	20	15	12	11	23	46	40	57.7	(Stroke/3.6) + 18.5	35.5	26.2	7.5	11.0	13.0	13.0	13.0	15.0	7.0	7.0	9.0	9.0	9.0	11.0
ø63	90	20	15	12	11	23	46	40	71.7	(Stroke/3.6) + 18.5	42.5	26.5	7.5	11.0	13.0	13.0	13.0	15.0	7.0	7.0	9.0	9.0	9.0	11.0

Code	Switch mounting: Band									
Bore size (mm)	HD			RD			P1	P2	P3	Pθ
	T0/T5	T2,T3	T2W T3W	T0/T5	T2,T3	T2W T3W				
ø20	6.5	6.5	8.5	7.5	7.5	9.5	19.6	21.5	14	(38)
ø25	5.5	5.5	7.5	8.5	8.5	10.5	22.1	23.9	14	(34)
ø32	6.5	6.5	8.5	9.5	9.5	11.5	25.6	27.6	16	(30)
ø40	8.5	8.5	10.5	11.5	11.5	13.5	30.2	32.1	16	(26)
ø50	11.0	11.0	13.0	13.0	13.0	15.0	35.7	37.4	16	(22)
ø63	11.0	11.0	13.0	13.0	13.0	15.0	42.7	44.4	16	(20)

***1: Needle relational dimensions and port sizes of the type with air cushion are the same as those of the basic. Refer to pages 238 and 239. (Those of ø20/ø25 are different from the basic.)**
***2: Refer to page 345 for RD, HD and protruding dimensions of the 2-color LED, off-delay, AC magnetic field proof, T1H/V and T8H/V switches.**
***3: For the dimensions of the accessories, refer to pages 252 and 253.**

SCP*3
CMK2
CMA2
SCM
SCG
SCA2
SCS2
CKV2
CAV2/COVP/N2
SSD2
SSG
SSD
CAT
MDC2
MVC
SMG
MSD/MSDG
FC*
STK
SRL3
SRG3
SRM3
SRT3
MRL2
MRG2
SM-25
ShkAbs
FJ
FK
Spd Contr
Ending

Dimensions (ø80 to ø100)

CAD

● Clevis bracket (CB)

· Switch mounting method: Rail

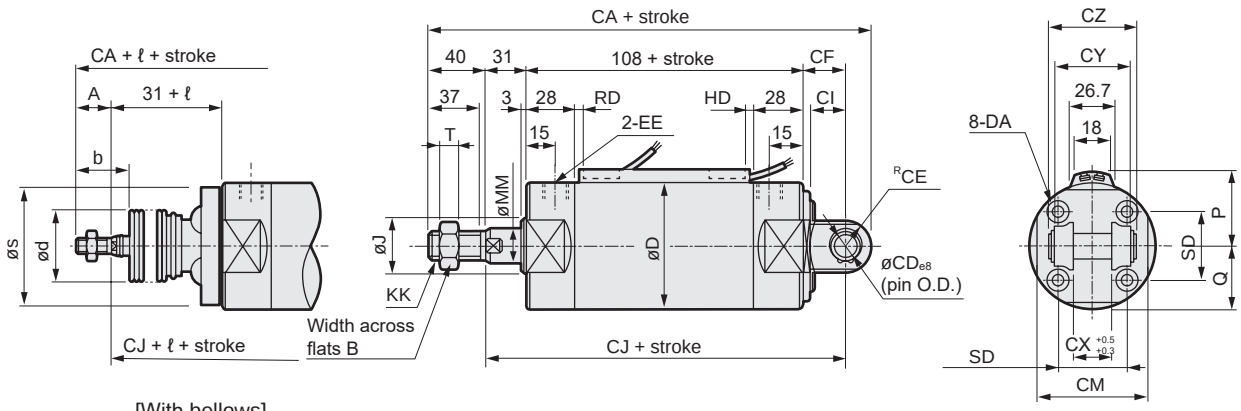

[With bellows]

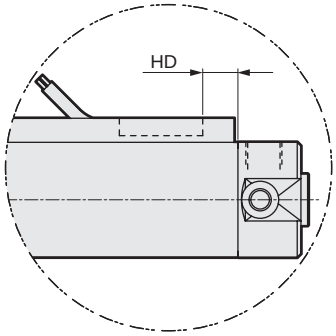

In the case of T2W, T3W

· Switch mounting: Band

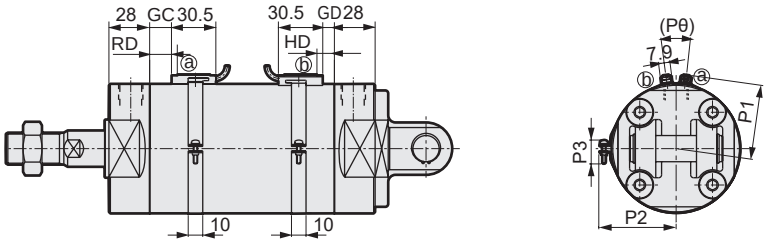

*1: Needle relational dimensions and port sizes of the type with air cushion are the same as those of the basic. Refer to pages 238 and 239.
*2: Refer to page 345 for RD, HD and protruding dimensions of the 2-color LED, off-delay, AC magnetic field proof, T1H/V and T8H/V switches.
*3: For the dimensions of the accessories, refer to pages 252 and 253.

Code / Bore size (mm)	Clevis bracket (CB) Basic dimensions																			
	B	CA	CD	CE	CF	CI	CJ	CM	CX	CY	CZ	D	DA	EE (*1)	J	KK	MM	Q	SD	T
ø80	32	232	18	18	35	25	174	80	28	56	64	89	M10	Rc3/8	40	M22x1.5	25	44.5	50	13
ø100	41	244	22	22	43	31	182	100	32	64	72	110	M12	Rc1/2	50	M26x1.5	30	55	60	16

Code / Bore size (mm)	With bellows				Switch mounting: Rail							Switch mounting: Band					
	b	d	s	ℓ	P	HD			RD			GD			GC		
						T0/T5	T2/T2R T3/T3P	T2W T3W	T0/T5	T2/T2R T3/T3P	T2W T3W	T0/T5	T2, T3	T2W T3W	T0/T5	T2, T3	T2W T3W
ø80	55	50	88.7	(Stroke/4.3) + 14.5	51	9.5	13.0	15.0	20.0	20.0	22.0	9.0	9.0	11.0	16.0	16.0	18.0
ø100	56	60	109.7	(Stroke/4.5) + 21	61.5	10.0	13.5	15.5	19.5	19.5	21.5	9.5	9.5	11.5	15.5	15.5	17.5

Code / Bore size (mm)	HD			RD			P1	P2	P3	Pθ
	T0/T5	T2, T3	T2W T3W	T0/T5	T2, T3	T2W T3W				
ø80	13.0	13.0	15.0	20.0	20.0	22.0	51.2	53.0	16	(16°)
ø100	13.5	13.5	15.5	19.5	19.5	21.5	61.7	63.5	16	(16°)

Dimensions (ø80 to ø100)

● Clevis bracket (CB) with bracket (option code B1)

· Switch mounting method: Rail

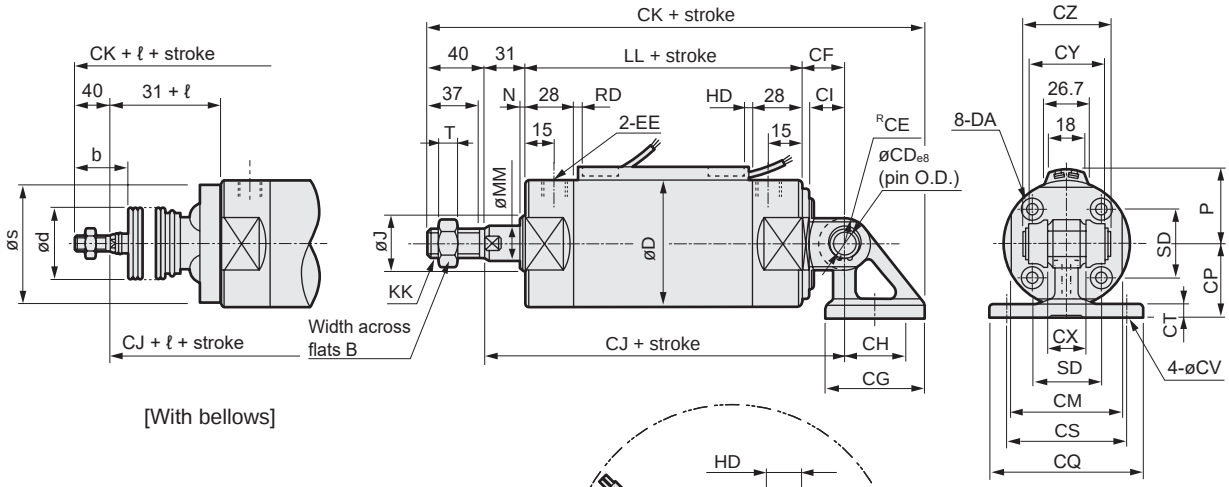

[With bellows]

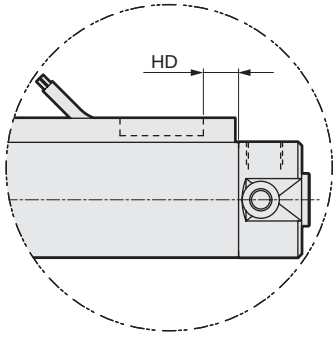

In the case of T2W, T3W

· Switch mounting: Band

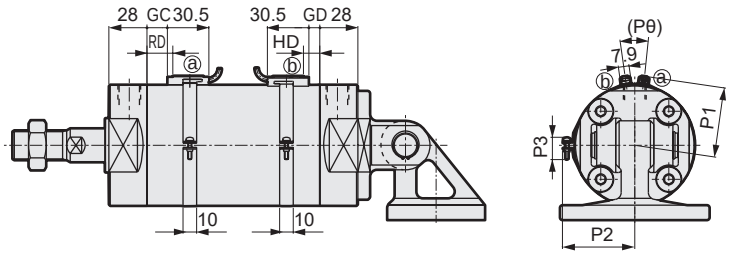

*1: Needle relational dimensions and port sizes of the type with air cushion are the same as those of the basic. Refer to pages 238 and 239.
*2: Refer to page 345 for RD, HD and protruding dimensions of the 2-color LED, off-delay, AC magnetic field proof, T1H/V and T8H/V switches.
*3: For the dimensions of the accessories, refer to pages 252 and 253.

Code	Clevis bracket (CB) with bracket (option code B1) Basic dimensions																						
Bore size (mm)	B	CD	CE	CF	CG	CH	CI	CJ	CK	CM	CP	CQ	CS	CT	CV	CX	CY	CZ	D	DA	EE (*1)	J	KK
ø80	32	18	18	35	72	45	25	174	272.5	80	55	110	85	11	11	28	56	64	89	M10	Rc3/8	40	M22x1.5
ø100	41	22	22	43	93	60	31	182	298.5	100	65	130	100	12	13.5	32	64	72	110	M12	Rc1/2	50	M26x1.5

Code						With bellows				Switch mounting: Rail							Switch mounting: Band		
Bore size (mm)	LL	MM	N	SD	T	b	d	s	ℓ	P	HD			RD			GD		
											T0/T5	T2/T2R T3/T3P	T2W T3W	T0/T5	T2/T2R T3/T3P	T2W T3W	T0/T5	T2, T3	T2W T3W
ø80	108	25	3	50	13	55	50	88.7	(Stroke/4.3) + 14.5	51	9.5	13.0	15.0	20.0	20.0	22.0	9.0	9.0	11.0
ø100	108	30	3	60	16	56	60	109.7	(Stroke/4.5) + 21	61.5	10.0	13.5	15.5	19.5	19.5	21.5	9.5	9.5	11.5

Code													
Bore size (mm)	GC			HD			RD			P1	P2	P3	Pθ
	T0/T5	T2, T3	T2W T3W	T0/T5	T2, T3	T2W T3W	T0/T5	T2, T3	T2W T3W				
ø80	16.0	16.0	18.0	13.0	13.0	15.0	20.0	20.0	22.0	51.2	53.0	16	(16°)
ø100	15.5	15.5	17.5	13.5	13.5	15.5	19.5	19.5	21.5	61.7	63.5	16	(16°)

SCP*3
CMK2
CMA2
SCM
SCG
SCA2
SCS2
CKV2
CAV2/COVP/N2
SSD2
SSG
SSD
CAT
MDC2
MVC
SMG
MSD/MSDG
FC*
STK
SRL3
SRG3
SRM3
SRT3
MRL2
MRG2
SM-25
ShkAbs
FJ
FK
Spd Contr
Ending

Dimensions (ø20 to ø63)

CAD

● Rod side trunnion (TA)

• Switch mounting: Rail

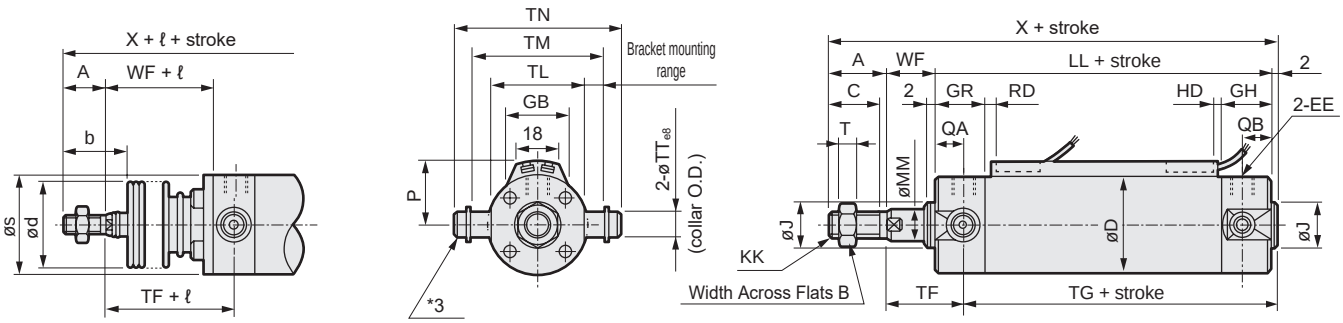

[With bellows]

• Switch mounting: Band

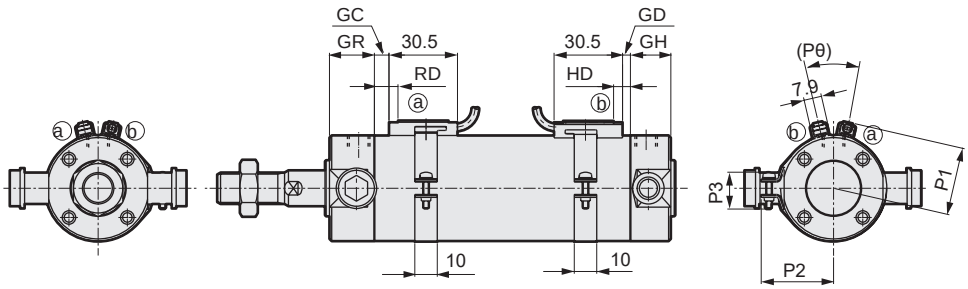

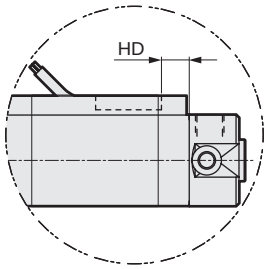

In the case of T2W, T3W

***1: Needle relational dimensions and port sizes of the type with air cushion are the same as those of the basic. Refer to pages 238 and 239. (Those of ø20/ø25 are different from the basic.)**

***2: Refer to page 345 for RD, HD and protruding dimensions of the 2-color LED, off-delay, AC magnetic field proof, T1H/V and T8H/V switches.**

*3: Composed of a collar, plain washer and hexagon socket head cap screw.

***4: For the dimensions of the accessories, refer to pages 252 and 253.**

Code	Rod side trunnion (TA) Basic dimensions																
Bore size (mm)	A	B	C	D	EE (*1)	GH	GR	J	KK	LL	MM	QA	QB	T	TF	TG	TL
ø20	18	13	16	26	Rc1/8	17	19	12	M8	69	8	12	10	5	28	60	28
ø25	22	17	20	31	Rc1/8	17	19	14	M10×1.25	69	10	12	10	6	29	60	33
ø32	22	17	20	38	Rc1/8	17	19	18	M10×1.25	71	12	12	10	6	29	62	40
ø40	30	22	27	47	Rc1/8	19	20	25	M14×1.5	78	16	13	12	8	32	68	49
ø50	35	27	32	58	Rc1/4	22	25	30	M18×1.5	90	20	15	12	11	36	79	60
ø63	35	27	32	72	Rc1/4	22	25	32	M18×1.5	90	20	15	12	11	36	79	74

Code						With bellows				Switch mounting: Rail							
Bore size (mm)	TM	TN	TT	WF	X	b	d	s	ℓ	P	GB	HD			RD		
												T0/T5	T2/T2R T3/T3P	T2W T3W	T0/T5	T2/T2R T3/T3P	T2W T3W
ø20	39	47.6	8	17	106	30	30	25.7	(stroke/3) + 18.5	19.5	23	3.0	6.5	8.5	7.5	7.5	9.5
ø25	43	53	10	18	111	35	30	30.7	(stroke/3) + 20.5	22	24.4	2.0	5.5	7.5	8.5	8.5	10.5
ø32	54.5	67.7	12	18	113	31.5	35	37.7	(stroke/3) + 19	25.5	25	3.0	6.5	8.5	9.5	9.5	11.5
ø40	65.9	81.1	14	20	130	40	35	46.7	(stroke/3) + 18.5	30	25.7	5.0	8.5	10.5	11.5	11.5	13.5
ø50	80	98.6	16	23	150	46	40	57.7	(stroke/3.6) + 18.5	35.5	26.2	7.5	11.0	13.0	13.0	13.0	15.0
ø63	98	119.2	18	23	150	46	40	71.7	(stroke/3.6) + 18.5	42.5	26.5	7.5	11.0	13.0	13.0	13.0	15.0

Code	Switch mounting: Band															
Bore size (mm)	GD			GC			HD			RD			P1	P2	P3	Pθ
	T0/T5	T2,T3	T2W T3W	T0/T5	T2,T3	T2W T3W	T0/T5	T2,T3	T2W T3W	T0/T5	T2,T3	T2W T3W				
ø20	2.5	2.5	4.5	3.5	3.5	5.5	6.5	6.5	8.5	7.5	7.5	9.5	19.6	21.5	14	(38°)
ø25	1.5	1.5	3.5	4.5	4.5	6.5	5.5	5.5	7.5	8.5	8.5	10.5	22.1	23.9	14	(34°)
ø32	2.5	2.5	4.5	5.5	5.5	7.5	6.5	6.5	8.5	9.5	9.5	11.5	25.6	27.6	16	(30°)
ø40	4.5	4.5	6.5	7.5	7.5	9.5	8.5	8.5	10.5	11.5	11.5	13.5	30.2	32.1	16	(26°)
ø50	7.0	7.0	9.0	9.0	9.0	11.0	11.0	11.0	13.0	13.0	13.0	15.0	35.7	37.4	16	(22°)
ø63	7.0	7.0	9.0	9.0	9.0	11.0	11.0	11.0	13.0	13.0	13.0	15.0	42.7	44.4	16	(20°)

Dimensions (ø20 to ø63)

CAD

● Rod side trunnion (TA) with bracket (option code B2)

• Switch mounting: Rail

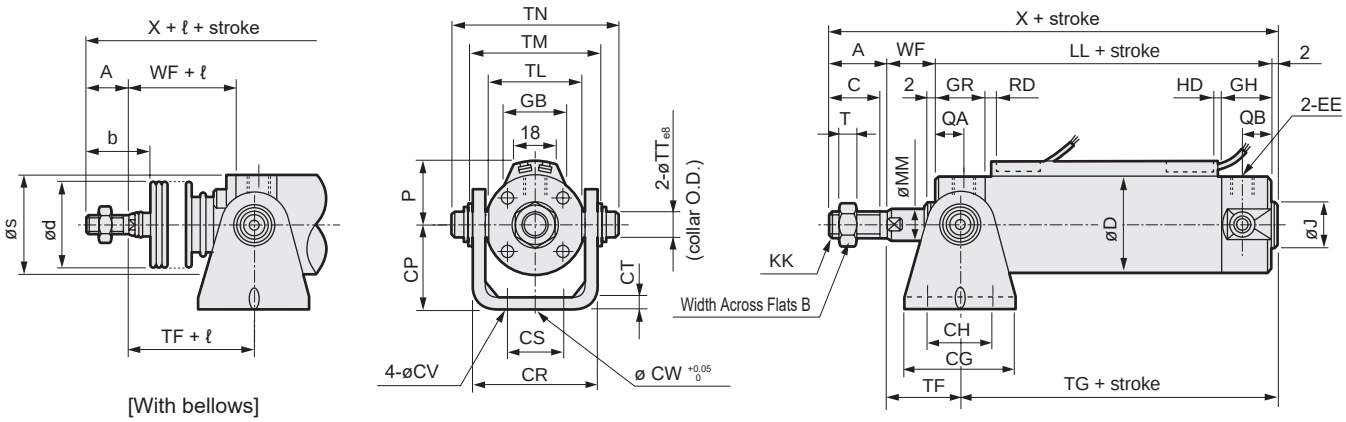

• Switch mounting: Band

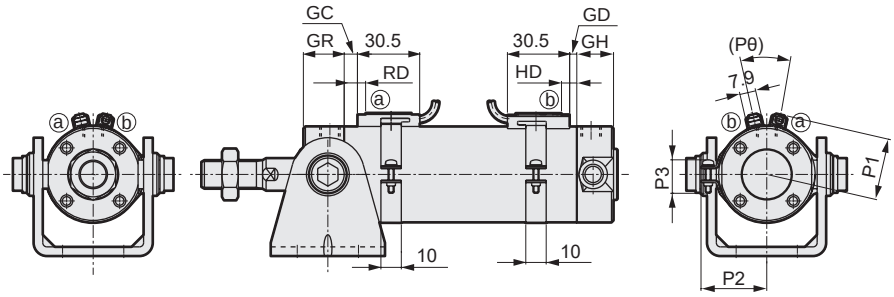

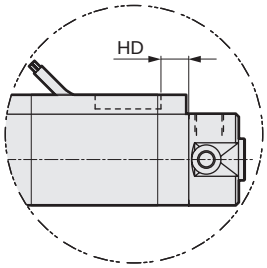

In the case of T2W, T3W

***1: Needle relational dimensions and port sizes of the type with air cushion are the same as those of the basic. Refer to pages 238 and 239. (Those of ø20/ø25 are different from the basic.)**
***2: Refer to page 345 for RD, HD and protruding dimensions of the 2-color LED, off-delay, AC magnetic field proof, T1H/V and T8H/V switches.**
***3: For the dimensions of the accessories, refer to pages 252 and 253.**

Code / Bore size (mm)	Rod side trunnion (TA) with bracket (option code B2) Basic dimensions																					
	A	B	C	CG	CH	CP	CR	CS	CT	CV	CW	D	EE (*1)	GH	GR	J	KK	LL	MM	QA	QB
ø20	18	13	16	42	28	25	35.8	16	3.2	5.5	10	26	Rc1/8	17	19	12	M8	69	8	12	10
ø25	22	17	20	42	28	30	39.8	20	3.2	5.5	10	31	Rc1/8	17	19	14	M 10 x 1.25	69	10	12	10
ø32	22	17	20	48	28	35	49.4	22	4.5	6.6	10	38	Rc1/8	17	19	18	M 10 x 1.25	71	12	12	10
ø40	30	22	27	56	30	40	58.4	30	4.5	6.6	10	47	Rc1/8	19	20	25	M 14 x 1.5	78	16	13	12
ø50	35	27	32	64	36	50	72.4	36	6	9	20	58	Rc1/4	22	25	30	M 18 x 1.5	90	20	15	12
ø63	35	27	32	74	46	60	90.4	46	8	11	20	72	Rc1/4	22	25	32	M 18 x 1.5	90	20	15	12

Code / Bore size (mm)										With bellows				Switch mounting: Rail								
	T	TF	TG	TL	TM	TN	TT	WF	X	b	d	s	ℓ	P	GB	HD			RD			
																T0/T5	T2/T2R T3/T3P	T2W T3W	T0/T5	T2/T2R T3/T3P	T2W T3W
ø20	5	28	60	28	39	47.6	8	17	106	30	30	25.7	(Stroke/3) + 18.5	19.5	23	3.0	6.5	8.5	7.5	7.5	9.5
ø25	6	29	60	33	43	53	10	18	111	35	30	30.7	(Stroke/3) + 20.5	22	24.4	2.0	5.5	7.5	8.5	8.5	10.5
ø32	6	29	62	40	54.5	67.7	12	18	113	31.5	35	37.7	(Stroke/3) + 19	25.5	25	3.0	6.5	8.5	9.5	9.5	11.5
ø40	8	32	68	49	65.9	81.1	14	20	130	40	35	46.7	(Stroke/3) + 18.5	30	25.7	5.0	8.5	10.5	11.5	11.5	13.5
ø50	11	36	79	60	80	98.6	16	23	150	46	40	57.7	(Stroke/3.6) + 18.5	35.5	26.2	7.5	11.0	13.0	13.0	13.0	15.0
ø63	11	36	79	74	98	119.2	18	23	150	46	40	71.7	(Stroke/3.6) + 18.5	42.5	26.5	7.5	11.0	13.0	13.0	13.0	15.0

Code / Bore size (mm)	Switch mounting: Band															
	GD			GC			HD			RD			P1	P2	P3	Pθ
	T0/T5	T2,T3	T2W T3W	T0/T5	T2,T3	T2W T3W	T0/T5	T2,T3	T2W T3W	T0/T5	T2,T3	T2W T3W				
ø20	2.5	2.5	4.5	3.5	3.5	5.5	6.5	6.5	8.5	7.5	7.5	9.5	19.6	21.5	14	(38)
ø25	1.5	1.5	3.5	4.5	4.5	6.5	5.5	5.5	7.5	8.5	8.5	10.5	22.1	23.9	14	(34)
ø32	2.5	2.5	4.5	5.5	5.5	7.5	6.5	6.5	8.5	9.5	9.5	11.5	25.6	27.6	16	(30)
ø40	4.5	4.5	6.5	7.5	7.5	9.5	8.5	8.5	10.5	11.5	11.5	13.5	30.2	32.1	16	(26)
ø50	7.0	7.0	9.0	9.0	9.0	11.0	11.0	11.0	13.0	13.0	13.0	15.0	35.7	37.4	16	(22)
ø63	7.0	7.0	9.0	9.0	9.0	11.0	11.0	11.0	13.0	13.0	13.0	15.0	42.7	44.4	16	(20)

SCP*3
CMK2
CMA2
SCM
SCG
SCA2
SCS2
CKV2
CAV2/ COVP/N2
SSD2
SSG
SSD
CAT
MDC2
MVC
SMG
MSD/ MSDG
FC*
STK
SRL3
SRG3
SRM3
SRT3
MRL2
MRG2
SM-25
ShkAbs
FJ
FK
Spd Contr
Ending

Dimensions (ø20 to ø63)

CAD

● Head side trunnion (TB)

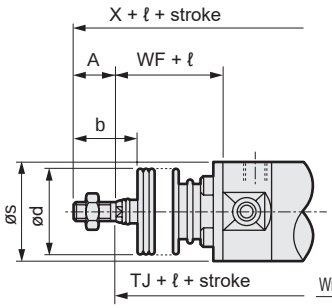

[With bellows]

• Switch mounting: Rail

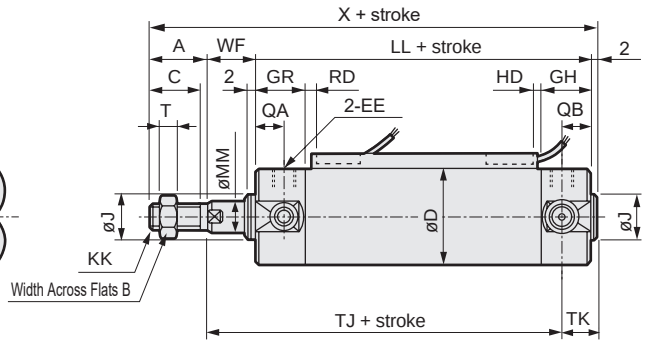

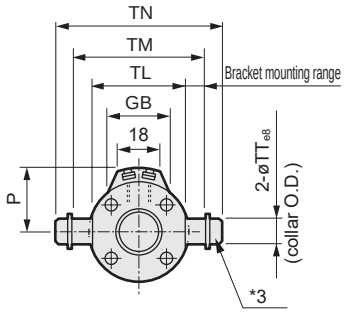

• Switch mounting: Band

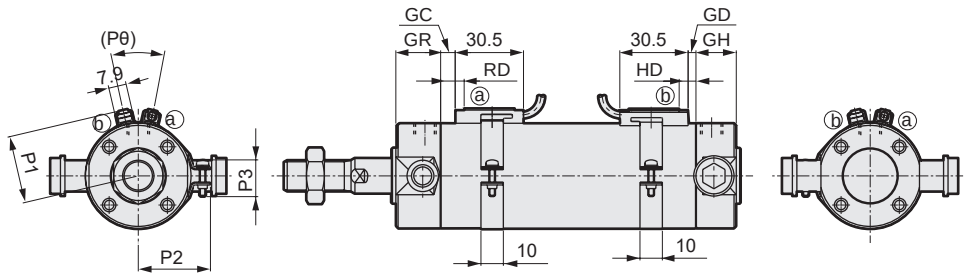

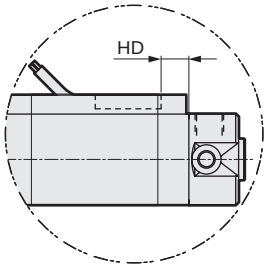

In the case of T2W, T3W

***1: Needle relational dimensions and port sizes of the type with air cushion are the same as those of the basic. Refer to pages 238 and 239. (Those of ø20/ø25 are different from the basic.)**

***2: Refer to page 345 for RD, HD and protruding dimensions of the 2-color LED, off-delay, AC magnetic field proof, T1H/V and T8H/V switches.**

*3: Composed of a collar, plain washer and hexagon socket head cap screw.

***4: For the dimensions of the accessories, refer to pages 252 and 253.**

Code / Bore size (mm)	Head side trunnion (TB) Basic dimensions																					
	A	B	C	D	EE (*1)	GH	GR	J	KK	LL	MM	QA	QB	T	TJ	TK	TL	TM	TN	TT	WF	X
ø20	18	13	16	26	Rc1/8	17	19	12	M8	69	8	12	10	5	75	13	28	39	47.6	8	17	106
ø25	22	17	20	31	Rc1/8	17	19	14	M 10 x 1.25	69	10	12	10	6	76	13	33	43	53	10	18	111
ø32	22	17	20	38	Rc1/8	17	19	18	M 10 x 1.25	71	12	12	10	6	79	12	40	54.5	67.7	12	18	113
ø40	30	22	27	47	Rc1/8	19	20	25	M 14 x 1.5	78	16	13	12	8	88	12	49	65.9	81.1	14	20	130
ø50	35	27	32	58	Rc1/4	22	25	30	M 18 x 1.5	90	20	15	12	11	101	14	60	80	98.6	16	23	150
ø63	35	27	32	72	Rc1/4	22	25	32	M 18 x 1.5	90	20	15	12	11	101	14	74	98	119.2	18	23	150

Code / Bore size (mm)	With bellows				Switch mounting: Rail									Switch mounting: Band					
	b	d	s	ℓ	P	GB	HD			RD				GD			GC		
							T0/T5	T2/T2R T3/T3P	T2W T3W	T0/T5	T2/T2R T3/T3P	T2W T3W		T0/T5	T2, T3	T2W T3W	T0/T5	T2, T3	T2W T3W
ø20	30	30	25.7	(Stroke/3) + 18.5	19.5	23	3.0	6.5	8.5	7.5	7.5	9.5		2.5	2.5	4.5	3.5	3.5	5.5
ø25	35	30	30.7	(Stroke/3) + 20.5	22	24.4	2.0	5.5	7.5	8.5	8.5	10.5		1.5	1.5	3.5	4.5	4.5	6.5
ø32	31.5	35	37.7	(Stroke/3) + 19	25.5	25	3.0	6.5	8.5	9.5	9.5	11.5		2.5	2.5	4.5	5.5	5.5	7.5
ø40	40	35	46.7	(Stroke/3) + 18.5	30	25.7	5.0	8.5	10.5	11.5	11.5	13.5		4.5	4.5	6.5	7.5	7.5	9.5
ø50	46	40	57.7	(Stroke/3.6) + 18.5	35.5	26.2	7.5	11.0	13.0	13.0	13.0	15.0		7.0	7.0	9.0	9.0	9.0	11.0
ø63	46	40	71.7	(Stroke/3.6) + 18.5	42.5	26.5	7.5	11.0	13.0	13.0	13.0	15.0		7.0	7.0	9.0	9.0	9.0	11.0

Code / Bore size (mm)	HD			RD			P1	P2	P3	Pθ
	T0/T5	T2,T3	T2W T3W	T0/T5	T2,T3	T2W T3W				
ø20	6.5	6.5	8.5	7.5	7.5	9.5	19.6	21.5	14	(38)
ø25	5.5	5.5	7.5	8.5	8.5	10.5	22.1	23.9	14	(34)
ø32	6.5	6.5	8.5	9.5	9.5	11.5	25.6	27.6	16	(30)
ø40	8.5	8.5	10.5	11.5	11.5	13.5	30.2	32.1	16	(26)
ø50	11.0	11.0	13.0	13.0	13.0	15.0	35.7	37.4	16	(22)
ø63	11.0	11.0	13.0	13.0	13.0	15.0	42.7	44.4	16	(20)

Dimensions (ø20 to ø63)

CAD

● Head side trunnion (TB) with bracket (option code B2)

• Switch mounting: Rail

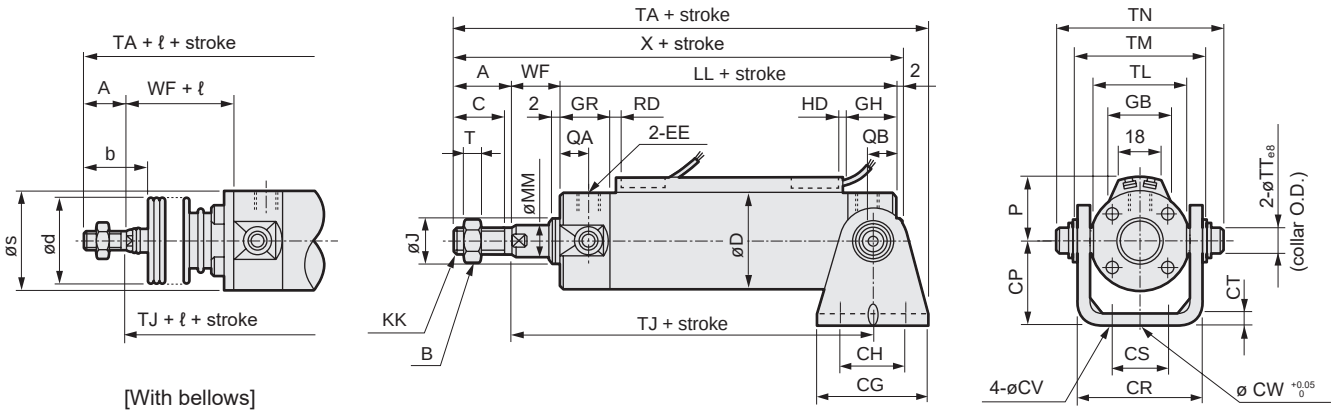

• Switch mounting: Band

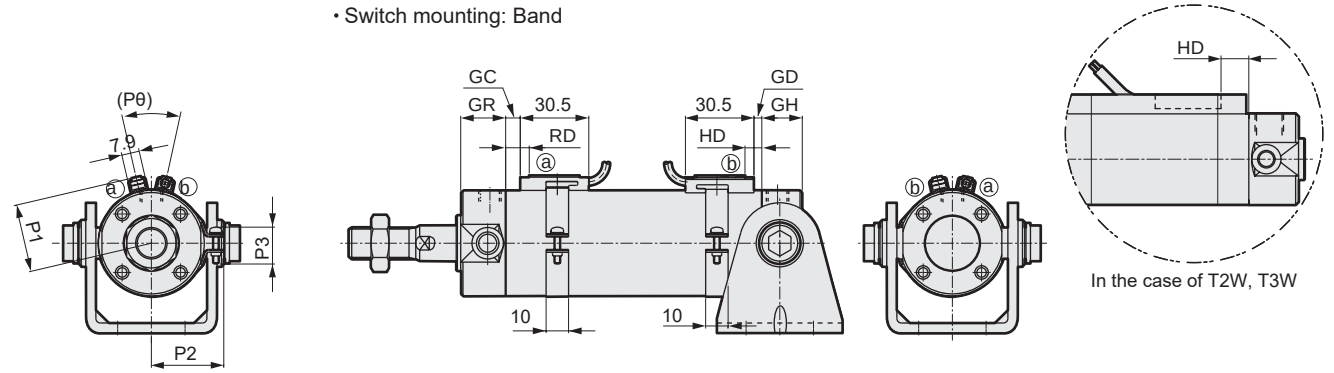

***1: Needle relational dimensions and port sizes of the type with air cushion are the same as those of the basic. Refer to pages 238 and 239. (Those of ø20/ø25 are different from the basic.)**
***2: Refer to page 345 for RD, HD and protruding dimensions of the 2-color LED, off-delay, AC magnetic field proof, T1H/V and T8H/V switches.**
***3: For the dimensions of the accessories, refer to pages 252 and 253.**

Code	Head side trunnion (TB) with bracket (option code B2) Basic dimensions																					
Bore size (mm)	A	B	C	CG	CH	CP	CR	CS	CT	CV	CW	D	EE (*1)	GH	GR	J	KK	LL	MM	QA	QB
ø20	18	13	16	42	28	25	35.8	16	3.2	5.5	10	26	Rc1/8	17	19	12	M8	69	8	12	10
ø25	22	17	20	42	28	30	39.8	20	3.2	5.5	10	31	Rc1/8	17	19	14	M 10 x 1.25	69	10	12	10
ø32	22	17	20	48	28	35	49.4	22	4.5	6.6	10	38	Rc1/8	17	19	18	M 10 x 1.25	71	12	12	10
ø40	30	22	27	56	30	40	58.4	30	4.5	6.6	10	47	Rc1/8	19	20	25	M 14 x 1.5	78	16	13	12
ø50	35	27	32	64	36	50	72.4	36	6	9	20	58	Rc1/4	22	25	30	M 18 x 1.5	90	20	15	12
ø63	35	27	32	74	46	60	90.4	46	8	11	20	72	Rc1/4	22	25	32	M 18 x 1.5	90	20	15	12

Code										With bellows				Switch mounting: Rail								
Bore size (mm)	T	TA	TJ	TL	TM	TN	TT	WF	X	b	d	s	ℓ	P	GB	HD			RD			
																T0/T5	T2/T2R T3/T3P	T2W T3W	T0/T5	T2/T2R T3/T3P	T2W T3W
ø20	5	114	75	28	39	47.6	8	17	106	30	30	25.7	(Stroke/3) + 18.5	19.5	23	3.0	6.5	8.5	7.5	7.5	9.5
ø25	6	119	76	33	43	53	10	18	111	35	30	30.7	(Stroke/3) + 20.5	22	24.4	2.0	5.5	7.5	8.5	8.5	10.5
ø32	6	125	79	40	54.5	67.7	12	18	113	31.5	35	37.7	(Stroke/3) + 19	25.5	25	3.0	6.5	8.5	9.5	9.5	11.5
ø40	8	146	88	49	65.9	81.1	14	20	130	40	35	46.7	(Stroke/3) + 18.5	30	25.7	5.0	8.5	10.5	11.5	11.5	13.5
ø50	11	168	101	60	80	98.6	16	23	150	46	40	57.7	(Stroke/3.6) + 18.5	35.5	26.2	7.5	11.0	13.0	13.0	13.0	15.0
ø63	11	173	101	74	98	119.2	18	23	150	46	40	71.7	(Stroke/3.6) + 18.5	42.5	26.5	7.5	11.0	13.0	13.0	13.0	15.0

Code	Switch mounting: Band															
Bore size (mm)	GD			GC			HD			RD			P1	P2	P3	Pθ
	T0/T5	T2,T3	T2W T3W	T0/T5	T2,T3	T2W T3W	T0/T5	T2,T3	T2W T3W			T2W T3W				
ø20	2.5	2.5	4.5	3.5	3.5	5.5	6.5	6.5	8.5	7.5	7.5	9.5	19.6	21.5	14	(38)
ø25	1.5	1.5	3.5	4.5	4.5	6.5	5.5	5.5	7.5	8.5	8.5	10.5	22.1	23.9	14	(34)
ø32	2.5	2.5	4.5	5.5	5.5	7.5	6.5	6.5	8.5	9.5	9.5	11.5	25.6	27.6	16	(30)
ø40	4.5	4.5	6.5	7.5	7.5	9.5	8.5	8.5	10.5	11.5	11.5	13.5	30.2	32.1	16	(26)
ø50	7.0	7.0	9.0	9.0	9.0	11.0	11.0	11.0	13.0	13.0	13.0	15.0	35.7	37.4	16	(22)
ø63	7.0	7.0	9.0	9.0	9.0	11.0	11.0	11.0	13.0	13.0	13.0	15.0	42.7	44.4	16	(20)

Accessory dimensions

CAD

● Rod eye

● SCM-I-ø20 to ø32

Material: Steel
Chromate treatment

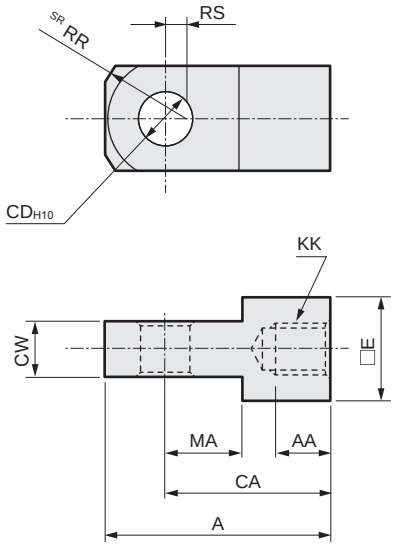

● SCM-I-ø40 to ø100

Material: Cast iron
Painted

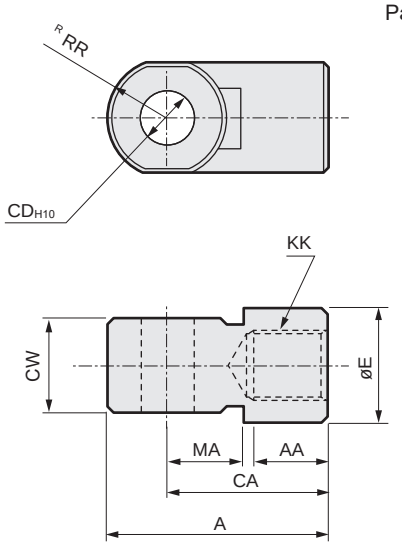

Model No.	Applicable bore size (mm)	A	AA	CA	CD	CW	E	KK	MA	RR	RS	Weight (g)
SCM-I-20	20	34	8.5	25	8	$8^{-0.2}_{-0.4}$	16	M8	11.5	13.4	3.1	39
SCM-I-25	25, 32	41	10.5	30	10	$10^{-0.2}_{-0.4}$	20	M10x1.25	14	17.1	4.5	72
SCM-I-40	40	42	14	30	10	$18^{-0.3}_{-0.5}$	22	M14x1.5	14	12	-	152
SCM-I-50	50, 63	56	18	40	14	$22^{-0.3}_{-0.5}$	28	M18x1.5	20	16	-	158
SCM-I-80	80	71	21	50	18	$28^{-0.3}_{-0.5}$	38	M22x1.5	27	21	-	395
SCM-I-100	100	79	21	55	22	$32^{-0.3}_{-0.5}$	44	M26x1.5	31	24	-	564

● Rod clevis

● SCM-Y-ø20 to ø32

Material: Steel
Chromate treatment

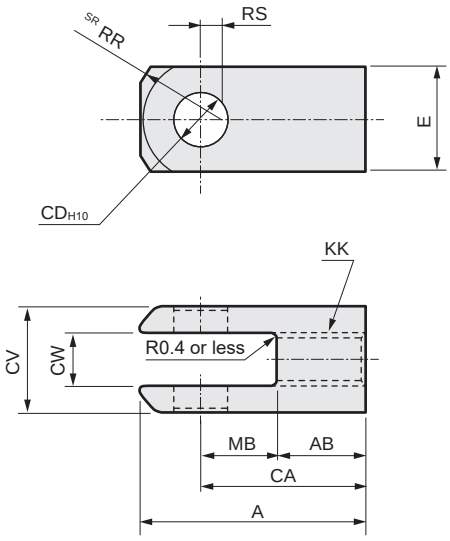

● SCM-Y-ø40 to ø100

Material: Cast iron
Painted

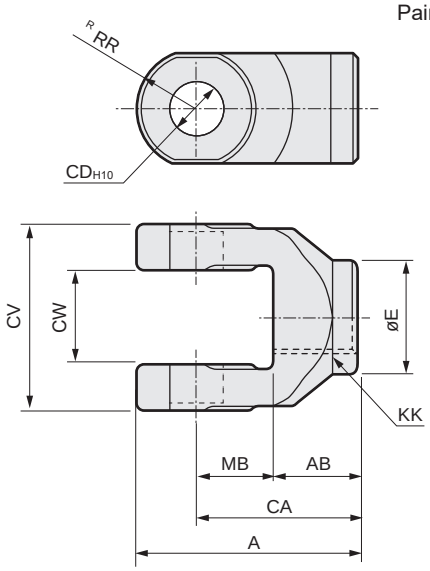

Model No.	Applicable bore size (mm)	A	AB	CA	CD	CV	CW	E	KK	MB	RR	RS	Applicable pin No.	Weight (g)
SCM-Y-20	20	34	13.5	25	8	16	$8^{+0.4}_{+0.2}$	16	M8	11.5	13.4	3.1	SCM-P-20	46
SCM-Y-25	25, 32	41	16	30	10	20	$10^{+0.4}_{+0.2}$	20	M10x1.25	14	17.1	4.5	SCM-P-25	85
SCM-Y-40	40	42	16	30	10	36	$18^{+0.5}_{+0.3}$	22	M14x1.5	14	12	-	SCM-P-40	122
SCM-Y-50	50, 63	56	20	40	14	44	$22^{+0.5}_{+0.3}$	28	M18x1.5	20	16	-	SCM-P-50	258
SCM-Y-80	80	71	23	50	18	56	$28^{+0.5}_{+0.3}$	38	M22x1.5	27	21	-	SCM-P-80	590
SCM-Y-100	100	79	24	55	22	64	$32^{+0.5}_{+0.3}$	44	M26x1.5	31	24	-	SCM-P-100	909

Note: A pin and a snap ring are included.

Accessory dimensions

● Pin for clevis

Material: Steel
Chromate treatment

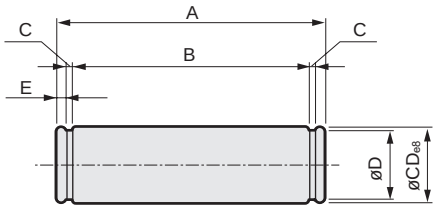

Model No.	Bore size (mm)	A	B	C	CD	D	E	Shaft snap ring	Weight (g)
SCM-P1-20	20	43.4	38.6	0.9	8	7.6	1.5	C for shaft 8	17
SCM-P1-25	25	48	42.6	1.15	10	9.6	1.6	C for shaft 10	30
SCM-P1-32	32	59.4	54	1.15	12	11.5	1.6	C for shaft 12	52
SCM-P1-40	40	71.4	65	1.15	14	13.4	2.1	C for shaft 14	85
SCM-P1-50	50	86	79.6	1.15	16	15.2	2.1	C for shaft 16	133
SCM-P1-63	63	105.4	97.8	1.35	18	17	2.5	C for shaft 18	207

*1: A pin and a snap ring are attached to the eye bracket and clevis bracket.
*2: For bore sizes ø80 and ø100, the dimension is the same as the pin for rod eye.

● Rod eye pin

Material: Steel
Chromate treatment

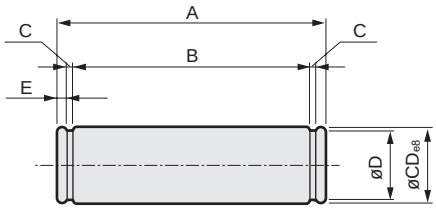

Model No.	Bore size (mm)	A	B	C	CD	D	E	Shaft snap ring	Weight (g)
SCM-P-20	20	21	16.2	0.9	8	7.6	1.5	C for shaft 8	9
SCM-P-25	25, 32	25.6	20.2	1.15	10	9.6	1.6	C for shaft 10	16
SCM-P-40	40	41.6	36.2	1.15	10	9.6	1.6	C for shaft 10	26
SCM-P-50	50, 63	50.6	44.2	1.15	14	13.4	2.1	C for shaft 14	60
SCM-P-80	80	64	56.2	1.35	18	17	2.6	C for shaft 18	126
SCM-P-100	100	72	64.2	1.35	22	21	2.6	C for shaft 22	213

Note: A pin and a snap ring are included with the rod clevis.

● No.2 bracket

● Clevis bracket (B2)
SCM-B2-ø20 to ø63

Material: Steel
Chromate treatment

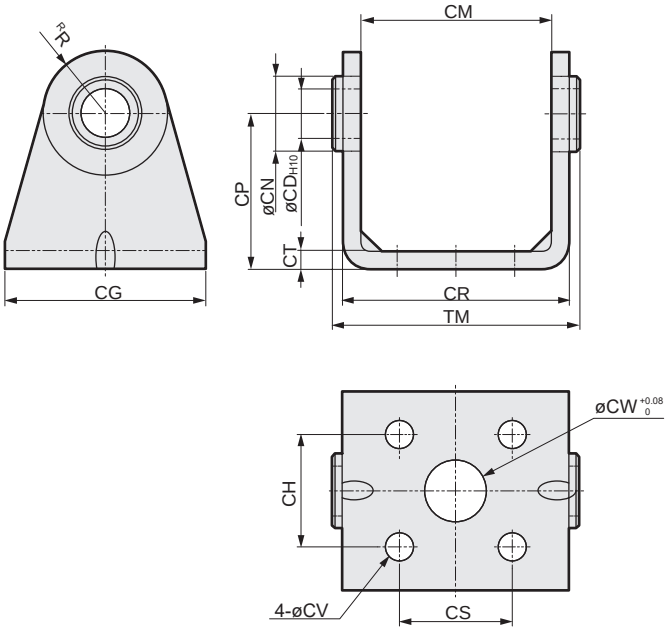

● Eye bracket (B1)
SCM-B1-ø80 to ø100

Material: Cast iron
Painted

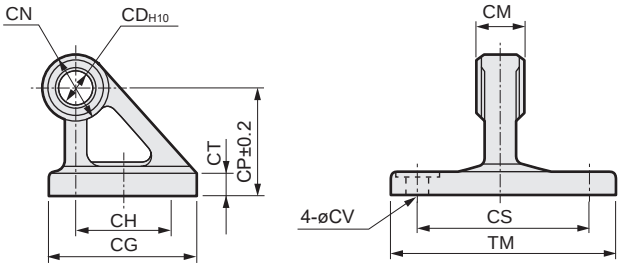

Model No.	Applicable bore size (mm)	CD	CG	CH	CM	CN	CP	CR	CS	CT	CV	CW	R	TM	Weight (g)
SCM-B2-20	20	8	42	28	$29^{+0.4}_{+0.1}$	13	25	35.8	16	3.2	5.5	10	11	38	72
SCM-B2-25	25	10	42	28	$33^{+0.4}_{+0.1}$	15	30	39.8	20	3.2	5.5	10	13	42	90
SCM-B2-32	32	12	48	28	$40^{+0.5}_{+0.1}$	17	35	49.4	22	4.5	6.6	10	15	53.4	166
SCM-B2-40	40	14	56	30	$49^{+0.5}_{+0.1}$	21	40	58.4	30	4.5	6.6	10	18	64.4	239
SCM-B2-50	50	16	64	36	$60^{+0.5}_{+0.1}$	24	50	72.4	36	6	9	20	20	78.8	417
SCM-B2-63	63	18	74	46	$74^{+0.7}_{+0.1}$	26	60	90.4	46	7.5	11	20	22	96.6	754
SCM-B1-80	80	18	72	45	$28^{-0.1}_{-0.3}$	36	55	-	85	11	11	-	-	110	1000
SCM-B1-100	100	22	93	60	$32^{-0.1}_{-0.3}$	50	65	-	100	12	13.5	-	-	130	1735

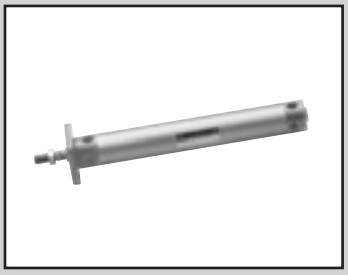

Round shaped cylinder
Single acting/push

SCM-X Series

● Bore size: ø20/ø25/ø32/ø40

JIS symbol

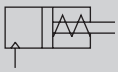

RoHS CAD

Specifications

Item	SCM-X			
Bore size mm	ø20	ø25	ø32	ø40
Actuation	Single acting/push			
Working fluid	Compressed air			
Max. working pressure MPa	1.0 (≈150 psi, 10 bar)			
Min. working pressure MPa	0.2 (≈29 psi, 2 bar)			
Proof pressure MPa	1.6 (≈230 psi, 16 bar)			
Ambient temperature °C	-10 (14°F) to 60 (140°F) (no freezing)			
Port size	Rc1/8			
Stroke tolerance mm	+2.0 0			
Working piston speed mm/s	50 to 1000 (Operate within the allowable absorbed energy.)			
Cushion	Rubber cushion			
Lubrication	Not required (use turbine oil ISO VG32 if necessary for lubrication)			
Allowable absorbed energy J	0.1	0.2	0.5	0.9

Note: Do not leave the single acting cylinder pressurized for a long time. If it is left pressurized for long periods, the piston rod may not return due to spring load when the pressure is released.

Stroke

Bore size (mm)	Standard stroke (mm)	Max. stroke (mm)	Min. stroke (mm)
ø20	25, 50, 75 100, 125 150, 200	200	5
ø25			
ø32			
ø40			

*1: The custom stroke is available in 1 mm increments.

Spring load

(Unit: N)

Bore size (mm)	At stroke of 0 mm	At full stroke operation
ø20	11.8	38
ø25	12.5	40.2
ø32	24.3	54.9
ø40	28.4	100

Number of installed switches and min. stroke (mm)

● Switch mounting method: Rail

Switch quantity / Bore size (mm)	1				2			3				4				5			
	Proximity			Reed	Proximity		Reed	Proximity			Reed	Proximity			Reed	Proximity			Reed
	T2, T3	T2W, T3W	T*Y*		T2, T3	T*Y*		T2, T3	T2W, T3W	T*Y*		T2, T3	T2W, T3W	T*Y*		T2, T3	T2W, T3W	T*Y*	
ø20	10				25			50	70	70	55	55	70	70	55	75	110	110	90
ø25	10				25			50	70	70	55	55	70	70	55	75	110	110	90
ø32	10				25			50	70	70	55	55	70	70	55	75	110	110	90
ø40	10				25			50	70	70	55	55	70	70	55	75	110	110	90

● Switch mounting: Band

Switch quantity / Bore size (mm)	1				2				3				4				5			
	Proximity			Reed	Proximity			Reed	Proximity			Reed	Proximity			Reed	Proximity			Reed
	T2, T3	T2W, T3W	T*Y*		T2, T3	T2W, T3W	T*Y*		T2, T3	T2W, T3W	T*Y*		T2, T3	T2W, T3W	T*Y*		T2, T3	T2W, T3W	T*Y*	
ø20	10				25	30	35	25	50	55	55	50	75	75	80	70	95	100	100	95
ø25	10				25	30	35	25	50	55	55	50	75	75	80	70	95	100	100	95
ø32	10				25	30	35	25	50	55	55	50	75	75	80	70	95	100	100	95
ø40	10				25	30	35	25	50	55	55	50	75	75	80	70	95	100	100	95

*1: For types with one switch, when the stroke is between 10 and 24 mm, the trunnion mounting is not available since the switch rail mounting position is different. Refer to page 345 for mounting position.

Switch specifications

● 1-color/2-color LED

Item	2-wire proximity	2-wire proximity			3-wire proximity				2-wire reed							2-wire proximity
	T1H/ T1V	T2H/T2V/ T2JH/T2JV	T2YH/ T2YV	T2WH/ T2WV	T3H/ T3V	T3PH/ T3PV	T3YH/ T3YV	T3WH/ T3WV	T0H/T0V		T5H/T5V		T8H/T8V			T2YD (*4) T2YDT
Applications	For programming controller, relay, compact solenoid valve	Dedicated for programmable controller			For programmable controller, relay				For programmable controller, relay		For programmable controller, relay (no lamp), serial		For programmable controller, relay			Dedicated for programmable controller
Output method	-				NPN output	PNP output	NPN output	NPN output	-							
Pwr. supp. V.	-				10 to 28 VDC				-							
Load voltage	85 to 265 VAC	10 to 30 VDC		24 VDC ±10%	30 VDC or less				12/24 VDC	100/110 VAC	5/12/24 VDC	100/110 VAC	12/24 VDC	110 VAC	220 VAC	24 VDC ±10%
Load current	5 to 100 mA	5 to 20 mA (*3)			100 mA or less		50 mA or less		5 to 50 mA	7 to 20 mA	50 mA or less	20 mA or less	5 to 50 mA	7 to 20 mA	7 to 10 mA	5 to 20 mA
Indicator	LED (Lit when ON)	LED (Lit when ON)	Red/green LED (Lit when ON)	Red/green LED (Lit when ON)	LED (Lit when ON)	Yellow LED (Lit when ON)	Red/green LED (Lit when ON)	Red/green LED (Lit when ON)	LED (Lit when ON)		No indicator lamp		LED (Lit when ON)			Red/green LED (Lit when ON)
Leakage current	≤ 1 mA at 100 VAC, ≤ 2 mA at 200 VAC	1 mA or less			10 μA or less				0 mA							1 mA or less
Weight g	1 m:33 3 m:87 5 m:142	1 m:18 3 m:49 5 m:80	1 m:33 3 m:87 5 m:142	1 m:18 3 m:49 5 m:80	1 m:18 3 m:49 5 m:80		1 m:33 3 m:87 5 m:142	1 m:18 3 m:49 5 m:80	1 m:18 3 m:49 5 m:80				1 m:33 3 m:87 5 m:142			1 m:61 3 m:166 5 m:272

*1: Refer to Ending Page 1 for detailed switch specifications and dimensions.
*2: Switches other than the above models, such as switches with connectors, are also available. Refer to Ending Page 1.
*3: Max. load current: 20 mA at 25°C. The current is lower than 20 mA if the operating ambient temperature around the switch is higher than 25°C. (5 to 10 mA at 60°C)
*4: Switch for AC magnetic field (T2YD/T2YDT) cannot be used in DC magnetic field.

Cylinder weight

● Stroke: 5 to 50 (Unit: kg)

Item/mounting / Bore size	Product weight when stroke (S) = 0 mm					Switch weight (per 1 pc)	Additional weight per S = 10 mm	Added weight /S = 10 mm (with rail)	Band weight per switch
	Basic	Axial foot	Flange	Clevis	Trunnion				
ø20	0.15	0.26	0.18	0.20	0.16	Refer to the weight in the switch specifications.	0.010	0.012	0.007
ø25	0.24	0.37	0.28	0.32	0.26		0.014	0.016	0.007
ø32	0.36	0.52	0.42	0.51	0.39		0.018	0.020	0.007
ø40	0.59	0.81	0.67	0.82	0.64		0.030	0.032	0.007

● Stroke: 51 to 100 (Unit: kg)

Item/mounting / Bore size	Product weight when stroke (S) = 0 mm					Switch weight (per 1 pc)	Additional weight per S = 10 mm	Added weight /S = 10 mm (with rail)	Band weight per switch
	Basic	Axial foot	Flange	Clevis	Trunnion				
ø20	0.19	0.30	0.22	0.24	0.20	Refer to the weight in the switch specifications.	0.010	0.012	0.007
ø25	0.32	0.45	0.36	0.40	0.34		0.014	0.016	0.007
ø32	0.46	0.62	0.52	0.61	0.49		0.018	0.020	0.007
ø40	0.76	0.98	0.84	0.99	0.81		0.030	0.032	0.007

● Stroke: 101 to 150 (Unit: kg)

Item/mounting / Bore size	Product weight when stroke (S) = 0 mm					Switch weight (per 1 pc)	Additional weight per S = 10 mm	Added weight /S = 10 mm (with rail)	Band weight per switch
	Basic	Axial foot	Flange	Clevis	Trunnion				
ø20	0.24	0.35	0.27	0.29	0.25	Refer to the weight in the switch specifications.	0.010	0.012	0.007
ø25	0.39	0.52	0.43	0.47	0.41		0.014	0.016	0.007
ø32	0.55	0.71	0.61	0.70	0.58		0.018	0.020	0.007
ø40	0.94	1.16	1.02	1.17	0.99		0.030	0.032	0.007

● Stroke: 151 to 200 (Unit: kg)

Item/mounting / Bore size	Product weight when stroke (S) = 0 mm					Switch weight (per 1 pc)	Additional weight per S = 10 mm	Added weight /S = 10 mm (with rail)	Band weight per switch
	Basic	Axial foot	Flange	Clevis	Trunnion				
ø20	0.29	0.40	0.32	0.34	0.30	Refer to the weight in the switch specifications.	0.010	0.012	0.007
ø25	0.46	0.59	0.50	0.54	0.48		0.014	0.016	0.007
ø32	0.65	0.81	0.71	0.80	0.68		0.018	0.020	0.007
ø40	1.11	1.33	1.19	1.34	1.16		0.030	0.032	0.007

(Example) Product weight of SCM-X-LB-40D-100-T2H-D
- Product weight when S = 0 mm ····· 0.98 kg
- Additional weight when S = 100 mm ····· 0.032x $\frac{100}{10}$ =0.32 kg
- Weight of 2 switches ····· 0.036 kg
- Product weight ····· 0.98 kg + 0.32 kg + 0.036 kg=1.336 kg

SCP*3
CMK2
CMA2
SCM
SCG
SCA2
SCS2
CKV2
CAV2/COVP/N2
SSD2
SSG
SSD
CAT
MDC2
MVC
SMG
MSD/MSDG
FC*
STK
SRL3
SRG3
SRM3
SRT3
MRL2
MRG2
SM-25
ShkAbs
FJ
FK
Spd Contr
Ending

How to order

No switch (built-in magnet for switch)

SCM-X - LB - 40 ◯ D - 100 ——— J I

With switch (built-in magnet for switch)

SCM-X - LB - 40 ◯ D - 100 - T0H - D - ◯ J I

Ⓐ Mounting *1

Ⓑ Bore size

Ⓒ Port thread

Ⓓ Cushion

Ⓔ Stroke

Ⓕ Switch model No. *3 *4

Ⓖ Switch quantity *5

Ⓗ Switch mounting

Ⓘ Option *5, *7

Ⓙ Accessory *8

Code	Description
Ⓐ Mounting	
00	Basic
LB	Axial foot
FA	Rod side flange
FB	Head side flange
CA	Eye bracket
TA	Rod side trunnion
TB	Head side trunnion

Ⓑ Bore size (mm)

20	ø20
25	ø25
32	ø32
40	ø40

Ⓒ Port thread

Blank	Rc thread
N	NPT thread (made-to-order product)
G	G thread (made-to-order product)

Ⓓ Cushion

D	With two-sided rubber cushion

Ⓔ Stroke (mm)

Bore size	Stroke *2	Custom stroke
ø20 to ø40	5 to 200	In 1 mm increments

Ⓕ Switch model No.

Axial lead wire	Radial lead wire	Contact	Voltage AC	Voltage DC	Indicator	Lead wire
T0H*	T0V*	Reed	●	●	1-color LED	2-wire
T5H*	T5V*	Reed	●	●	No indicator lamp	2-wire
T8H*	T8V*	Reed	●	●	1-color LED	2-wire
T1H*	T1V*	Proximity	●		1-color LED	2-wire
T2H*	T2V*	Proximity		●	1-color LED	2-wire
T3H*	T3V*	Proximity		●	1-color LED	3-wire
T3PH*	T3PV*	Proximity		●	1-color LED	3-wire
T2WH*	T2WV*	Proximity		●	2-color LED	2-wire
T2YH*	T2YV*	Proximity		●	2-color LED	2-wire
T3WH*	T3WY*	Proximity		●	2-color LED	3-wire
T3YH*	T3YV*	Proximity		●	2-color LED	3-wire
T2YD*	-	Proximity		●	2-color LED AC magnetic field	2-wire
T2YDT*	-	Proximity		●	2-color LED AC magnetic field	2-wire
T2JH*	T2JV*	Proximity		●	1-color LED off-delay	2-wire

*** Lead wire length**

Blank	1 m (standard)
3	3 m (option)
5	5 m (option)

Ⓖ Switch quantity

R	1 on rod side
H	1 on head side
D	2
T	3
4	4 (when there are more than 4 switches, indicate switch quantity.)

Ⓗ Switch mounting

Blank	Rail method
Z	Band method

Ⓘ Option

		Max. ambient temp.	Instantaneous max. temp.
J	Bellows material	100°C	200°C
L	Bellows material	250°C	400°C
Q	Switch rail included at shipment		
M	Piston rod material (stainless steel)		
P6	Copper and PTFE free		

Ⓙ Accessory

I	Rod eye
Y	Rod clevis (pin and snap ring included)
B2	Clevis bracket

⚠ Precautions for model No. selection

*1 : Mounting bracket will be shipped with the product.
*2 : Refer to page 254 for the number of installed switches and the min. stroke.
*3 : Switches other than Ⓕ Switch model No. are also available. (Made to order) Refer to Ending Page 1 for details.
*4 : T8H/V switches cannot be mounted when the switch mounting style is the rail.
*5 : The instantaneous max. temperature is the temperature when sparks, cutting chips, etc., instantaneously contact the bellows.
*6 : Refer to Ending Page 85 for custom specifications of rod end form.
*7 : "Q" (switch rail enclosed at shipment) is not available for the "Z" switch mounting.
*8 : "I" and "Y" cannot be selected together.
*9 : Switches are shipped with the product. Contact CKD if assembling before shipment is necessary.

[Example of model No.]

SCM-X-LB-40D-100-T0H-D-JI

Model: Round shaped cylinder, single acting/push

Ⓐ Mounting	: Axial foot
Ⓑ Bore size	: ø40 mm
Ⓒ Port thread	: Rc thread
Ⓓ Cushion	: With two-sided rubber cushion
Ⓔ Stroke	:100 mm
Ⓕ Switch model No.	: Proximity T0H switch, lead wire 1 m
Ⓖ Switch quantity	: 2
Ⓗ Switch mounting	: Rail
Ⓘ Option	: Bellows material/max. ambient temperature 100°C
Ⓙ Accessory	: Rod eye

How to order switch

[Switch mounting: Rail]

● Switch body + mounting rail set

SCM - T0H - D - 40 - 100

- T0H: Switch model No. (Item Ⓕ on page 256)
- D: Switch quantity (Item Ⓖ on page 256)
- 40: Bore size (Item Ⓑ on page 256)
- 100: Stroke (*1) (Item Ⓔ on page 256)

● Mounting rail only

SCM - T - 40 - 100

- T: Mounting rail
- 40: Bore size (Item Ⓑ on page 256)
- 100: Stroke (*2) (*1) (Item Ⓔ on page 256)

*1: Indicate X if the stroke exceeds 300 mm.
If exceeding 300 mm, a short rail (with 100 mm switch adjustment length) will be included per switch.
*2: If indicating X when ordering mounting rails only, order the same number of rails as that of applicable switches.

[Switch mounting: Band]

● Switch body + mounting bracket set + band

SCM - T2H* - 40 - Z

- T2H*: Switch model No. (Item Ⓕ on page 256)
- 40: Bore size (Item Ⓑ on page 256)

● Mounting bracket set + band

SCM - Z - 40

- 40: Bore size (Item Ⓑ on page 256)

[Switch body only]

SW - T0H

- T0H: Switch model No. (Item Ⓕ on page 256)

How to order mounting bracket

Bore size (mm) / Mounting bracket	ø20	ø25	ø32	ø40
Foot (LB)	SCM-LB-20	SCM-LB-25	SCM-LB-32	SCM-LB-40
Flange (FA/FB)	SCM-FA-20	SCM-FA-25	SCM-FA-32	SCM-FA-40
Eye bracket (CA)	SCM-CA-20	SCM-CA-25	SCM-CA-32	SCM-CA-40
Trunnion (TA/TB)	SCM-TA-20	SCM-TA-25	SCM-TA-32	SCM-TA-40

*1: All mounting brackets are supplied with mounting bolts.
*2: The foot mounting bracket is provided as 2 pcs./set.

Theoretical thrust table

(Unit: N)

Bore size (mm)	Working pressure MPa								
	0.2	0.3	0.4	0.5	0.6	0.7	0.8	0.9	1.0
ø20	25	56	88	1.19×10^2	1.50×10^2	1.82×10^2	2.13×10^2	2.45×10^2	2.76×10^2
ø25	58	1.07×10^2	1.56×10^2	2.05×10^2	2.54×10^2	3.03×10^2	3.52×10^2	4.02×10^2	4.51×10^2
ø32	1.06×10^2	1.86×10^2	2.67×10^2	3.47×10^2	4.28×10^2	5.08×10^2	5.88×10^2	6.69×10^2	7.49×10^2
ø40	1.51×10^2	2.77×10^2	4.03×10^2	5.28×10^2	6.54×10^2	7.80×10^2	9.05×10^2	1.03×10^3	1.16×10^3

Note: The load above indicates thrust excluding the spring force at the push end.

Internal structure and parts list

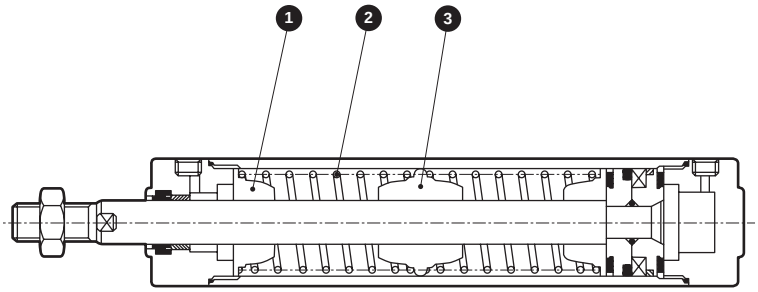

No.	Part name	Material	Remarks
1	Spring holder A	Aluminum alloy	
2	Coil spring	Piano wire	Electrodeposition
3	Spring holder B	Aluminum alloy	

Parts other than the above are the same as the double acting.

Repair parts list

Numbering of repair parts follows that in the internal structure of the SCM Series (page 236).

Bore size (mm)	Kit No.	Repair parts No.
ø20	SCM-X-20DK	3 6 8 10 13
ø25	SCM-X-25DK	
ø32	SCM-X-32DK	
ø40	SCM-X-40DK	

dimensions

● Single acting push

• Switch mounting: Rail

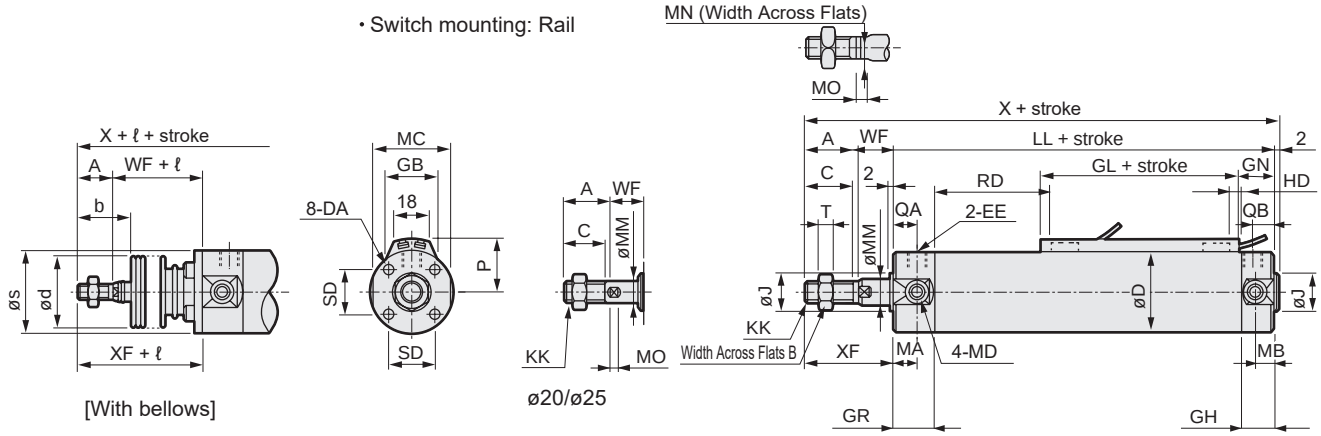

[With bellows]

• Switch mounting: Band

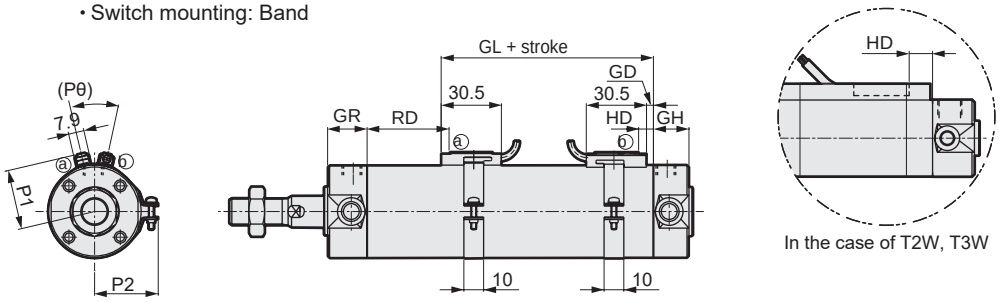

In the case of T2W, T3W

***1: For RD, HD and protruding dimensions of the 2-color LED, off-delay, AC magnetic field proof, T1H/V and T8H/V switches, Page 345.**

Code / Bore size (mm)	Basic (00) Basic dimensions										LL															
	A	B	C	D	DA	EE	GR	GH	J	KK	5 to 50ST	51 to 100	101 to 150	151 to 200	MA	MB	MC	MD	MM	MN	MO	QA	QB	SD	T	WF
ø20	18	13	16	26	M4 depth 6.5	Rc1/8	19	17	12	M8	96	123	150	177	11	11	24	M5	8	6	4	12	10	14	5	17
ø25	22	17	20	31	M5 depth 6.5	Rc1/8	19	17	14	M 10 x 1.25	99	129	159	189	11	11	29	M6	10	8	5	12	10	16.5	6	18
ø32	22	17	20	38	M5 depth 7.5	Rc1/8	19	17	18	M 10 x 1.25	101	131	161	191	11	10	36	M8	12	10	5.5	12	10	20	6	18
ø40	30	22	27	47	M6 depth 12	Rc1/8	20	19	25	M 14 x 1.5	108	138	168	198	12	10	44	M10	16	14	6	13	12	26	8	20

Code / Bore size (mm)	X				XF	With bellows				Switch mounting: Rail															
														HD			RD								
																	T0/T5				T2,T3				
	5 to 50ST	51 to 100	101 to 150	151 to 200		b	d	s	ℓ	P	GB	GN	GL	T0/T5	T2 T3	T2W T3W	5 to 50	Over 50 to 100	Over 100 to 150	Over 150 to 200	5 to 50	Over 50 to 100	Over 100 to 150	Over 150 to 200
ø20	133	160	187	214	35	30	30	25.7	(stroke/3) + 18.5	19.5	23	18.5	30	4	7	9.5	33.5	60.5	87.5	114.5	34.5	61.5	88.5	115.5
ø25	141	171	201	231	40	35	30	30.7	(stroke/3) + 20.5	22	24.4	18.5	30	3	6	8.5	37.5	67.5	97.5	127.5	38.5	68.5	98.5	128.5
ø32	143	173	203	233	40	31.5	35	37.7	(stroke/3) + 19	25.5	25	18.5	32	4	7	9.5	38.5	68.5	98.5	128.5	39.5	69.5	99.5	129.5
ø40	160	190	220	250	50	40	35	46.7	(stroke/3) + 18.5	30	25.7	20.5	36	6	9	11.5	40.5	70.5	100.5	130.5	41.5	71.5	101.5	131.5

Code / Bore size (mm)	Switch mounting: Band																										
					GL		HD			RD																
	T2W,T3W									T0/T5				T2,T3				T2W,T3W								
	5 to 50	Over 50 to 100	Over 100 to 150	Over 150 to 200	T0/T5	T2/T3 T2W/T3W	T0/T5	T2 T3	T2W T3W	5 to 50	Over 50 to 100	Over 100 to 150	Over 150 to 200	5 to 50	Over 50 to 100	Over 100 to 150	Over 150 to 200	5 to 50	Over 50 to 100	Over 100 to 150	Over 150 to 200	GD	P1	P2	P3	Pθ
ø20	35.5	62.5	89.5	116.5	30.5	29.5	5.5	6.5	9.5	33.5	60.5	87.5	14.5	34.5	61.5	88.5	115.5	35.5	62.5	89.5	116.5	1.5	19.6	21.5	14	(38)°
ø25	39.5	69.5	99.5	129.5	29.5	28.5	4.5	5.5	8.5	37.5	67.5	97.5	127.5	38.5	68.5	98.5	128.5	39.5	69.5	99.5	129.5	0.5	22.1	23.9	14	(34)°
ø32	40.5	70.5	100.5	130.5	30.5	29.5	5.5	6.5	9.5	38.5	68.5	98.5	128.5	39.5	69.5	99.5	129.5	40.5	70.5	100.5	130.5	1.5	25.6	27.6	16	(30)°
ø40	42.5	72.5	102.5	132.5	32.5	31.5	7.5	8.5	11.5	40.5	70.5	100.5	130.5	41.5	71.5	101.5	131.5	42.5	72.5	102.5	132.5	3.5	30.2	32.1	16	(26)°

*Installation dimensions other than X and LL mounting are the same as those of SCM (double acting). Pages 240 to 251.
* For the dimensions of the accessories, refer to pages 252 and 253.

Round shaped cylinder
Single acting/pull

SCM-Y Series

● Bore size: ø20/ø25/ø32/ø40

JIS symbol

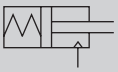

RoHS CAD

Specifications

Item	SCM-Y			
Bore size mm	ø20	ø25	ø32	ø40
Actuation	Single acting/pull			
Working fluid	Compressed air			
Max. working pressure MPa	1.0 (≈150 psi, 10 bar)			
Min. working pressure MPa	0.2 (≈29 psi, 2 bar)			
Proof pressure MPa	1.6 (≈230 psi, 16 bar)			
Ambient temperature °C	-10 (14°F) to 60 (140°F) (no freezing)			
Port size	Rc1/8			
Stroke tolerance mm	+2.0 0			
Working piston speed mm/s	50 to 1000 (Operate within the allowable absorbed energy.)			
Cushion	Rubber cushion			
Lubrication	Not required (use turbine oil ISO VG32 if necessary for lubrication)			
Allowable absorbed energy J	0.1	0.2	0.5	0.9

Note: Do not leave the single acting cylinder pressurized for a long time. If it is left pressurized for long periods, the piston rod may not return due to spring load when the pressure is released.

Stroke

Bore size (mm)	Standard stroke (mm)	Max. stroke (mm)	Min. stroke (mm)
ø20	25, 50, 75 100, 125 150, 200	200	5
ø25			
ø32			
ø40			

*1: The custom stroke is available in 1 mm increments.

Spring load

(Unit: N)

Bore size (mm)	When stroke length = 0	At full stroke operation
ø20	11.8	38
ø25	12.5	40.2
ø32	24.3	54.9
ø40	28.4	100

Number of installed switches and min. stroke (mm)

● Switch mounting method: Rail

Switch quantity	1				2				3				4				5			
Bore size (mm)	Proximity			Reed	Proximity			Reed	Proximity			Reed	Proximity			Reed	Proximity			Reed
	T2, T3	T2W, T3W	T*Y*		T2, T3	T2W, T3W	T*Y*		T2, T3	T2W, T3W	T*Y*		T2, T3	T2W, T3W	T*Y*		T2, T3	T2W, T3W	T*Y*	
ø20	10				25				50	70	70	55	55	70	70	55	75	110	110	90
ø25	10				25				50	70	70	55	55	70	70	55	75	110	110	90
ø32	10				25				50	70	70	55	55	70	70	55	75	110	110	90
ø40	10				25				50	70	70	55	55	70	70	55	75	110	110	90

● Switch mounting: Band

Switch quantity	1				2				3				4				5			
Bore size (mm)	Proximity			Reed	Proximity			Reed	Proximity			Reed	Proximity			Reed	Proximity			Reed
	T2, T3	T2W, T3W	T*Y*		T2, T3	T2W, T3W	T*Y*		T2, T3	T2W, T3W	T*Y*		T2, T3	T2W, T3W	T*Y*		T2, T3	T2W, T3W	T*Y*	
ø20	10				25	30	35	25	50	55	55	50	75	75	80	70	95	100	100	95
ø25	10				25	30	35	25	50	55	55	50	75	75	80	70	95	100	100	95
ø32	10				25	30	35	25	50	55	55	50	75	75	80	70	95	100	100	95
ø40	10				25	30	35	25	50	55	55	50	75	75	80	70	95	100	100	95

*1: For types with one switch, when the stroke is between 10 and 24 mm, the trunnion mounting is not available since the switch rail mounting position is different. Refer to page 345 for mounting position.

Switch specifications

● 1-color/2-color LED

Item	2-wire proximity	2-wire proximity			3-wire proximity				2-wire reed							2-wire proximity
	T1H/ T1V	T2H/T2V/ T2JH/T2JV	T2YH/ T2YV	T2WH/ T2WV	T3H/ T3V	T3PH/ T3PV	T3YH/ T3YV	T3WH/ T3WV	T0H/T0V		T5H/T5V		T8H/T8V			T2YD (*4) T2YDT
Applications	For programming controller, relay, compact solenoid valve	Dedicated for programmable controller			For programmable controller, relay				For programmable controller, relay		For programmable controller, relay (no lamp), serial		For programmable controller, relay			Dedicated for programmable controller
Output method	-				NPN output	PNP output	NPN output	NPN output	-							
Pwr. supp. V.	-				10 to 28 VDC				-							
Load voltage	85 to 265 VAC	10 to 30 VDC		24 VDC ±10%	30 VDC or less				12/24 VDC	100/110 VAC	5/12/24 VDC	100/110 VAC	12/24 VDC	110 VAC	220 VAC	24 VDC ±10%
Load current	5 to 100 mA	5 to 20 mA (*3)			100 mA or less		50 mA or less		5 to 50 mA	7 to 20 mA	≤50 mA	≤20 mA	5 to 50 mA	7 to 20 mA	7 to 10 mA	5 to 20 mA
	LED (Lit when ON)	LED (Lit when ON)	Red/green LED (Lit when ON)	Red/green LED (Lit when ON)	LED (Lit when ON)	Yellow LED (Lit when ON)	Red/green LED (Lit when ON)	Red/green LED (Lit when ON)	LED (Lit when ON)		No indicator lamp		LED (Lit when ON)			Red/green LED (Lit when ON)
Leakage current	≤ 1 mA at 100 VAC, ≤ 2 mA at 200 VAC	1 mA or less			10 μA or less				0 mA							1 mA or less
Weight g	1 m:33 3 m:87 5 m:142	1 m:18 3 m:49 5 m:80	1 m:33 3 m:87 5 m:142	1 m:18 3 m:49 5 m:80	1 m:18 3 m:49 5 m:80		1 m:33 3 m:87 5 m:142	1 m:18 3 m:49 5 m:80	1 m:18 3 m:49 5 m:80				1 m:33 3 m:87 5 m:142			1 m:61 3 m:166 5 m:272

*1: Refer to Ending Page 1 for detailed switch specifications and dimensions.
*2: Switches other than the above models, such as switches with connectors, are also available. Refer to Ending Page 1.
*3: Max. load current: 20 mA at 25°C. The current is lower than 20 mA if the operating ambient temperature around the switch is higher than 25˚C. (5 to 10 mA at 60°C)
*4: Switch for AC magnetic field (T2YD/T2YDT) cannot be used in DC magnetic field.

Cylinder weight

● Stroke 5 to 50 (Unit: kg)

Item/mounting / Bore size	Product weight when stroke (S) = 0 mm: Basic	Axial foot	Flange	Clevis	Trunnion	Switch weight (per 1 pc)	Additional weight per S = 10 mm	Additional weight per S = 10 mm (with rail)	Band weight per switch
ø20	0.14	0.25	0.17	0.19	0.15	Refer to the weight in the switch specifications.	0.010	0.012	0.007
ø25	0.22	0.35	0.26	0.30	0.24		0.014	0.016	0.007
ø32	0.33	0.49	0.39	0.48	0.36		0.018	0.020	0.007
ø40	0.54	0.76	0.62	0.77	0.59		0.030	0.032	0.007

● Stroke 51 to 100 (Unit: kg)

Item/mounting / Bore size	Product weight when stroke (S) = 0 mm: Basic	Axial foot	Flange	Clevis	Trunnion	Switch weight (per 1 pc)	Additional weight per S = 10 mm	Additional weight per S = 10 mm (with rail)	Band weight per switch
ø20	0.17	0.28	0.20	0.22	0.18	Refer to the weight in the switch specifications.	0.010	0.012	0.007
ø25	0.28	0.41	0.32	0.36	0.30		0.014	0.016	0.007
ø32	0.40	0.56	0.46	0.55	0.43		0.018	0.020	0.007
ø40	0.67	0.89	0.75	0.90	0.72		0.030	0.032	0.007

● Stroke 101 to 150 (Unit: kg)

Item/mounting / Bore size	Product weight when stroke (S) = 0 mm: Basic	Axial foot	Flange	Clevis	Trunnion	Switch weight (per 1 pc)	Additional weight per S = 10 mm	Additional weight per S = 10 mm (with rail)	Band weight per switch
ø20	0.21	0.32	0.24	0.26	0.22	Refer to the weight in the switch specifications.	0.010	0.012	0.007
ø25	0.33	0.46	0.37	0.41	0.35		0.014	0.016	0.007
ø32	0.47	0.63	0.53	0.62	0.50		0.018	0.020	0.007
ø40	0.80	1.02	0.88	1.03	0.85		0.030	0.032	0.007

● Stroke 151 to 200 (Unit: kg)

Item/mounting / Bore size	Product weight when stroke (S) = 0 mm: Basic	Axial foot	Flange	Clevis	Trunnion	Switch weight (per 1 pc)	Additional weight per S = 10 mm	Additional weight per S = 10 mm (with rail)	Band weight per switch
ø20	0.24	0.35	0.27	0.29	0.25	Refer to the weight in the switch specifications.	0.010	0.012	0.007
ø25	0.39	0.52	0.43	0.47	0.41		0.014	0.016	0.007
ø32	0.54	0.70	0.60	0.69	0.57		0.018	0.020	0.007
ø40	0.92	1.14	1.00	1.15	0.97		0.030	0.032	0.007

(Example) Product weight of SCM-Y-LB-40D-100-T2H-D
- Product weight when S = 0 mm ····· 0.89 kg
- Additional weight when S = 100 mm ····· $0.032 \times \frac{100}{10} = 0.32$ kg
- Weight of 2 switches ····· 0.036 kg
- Product weight ····· 0.89 kg + 0.32 kg + 0.036 kg=1.246 kg

SCP*3
CMK2
CMA2
SCM
SCG
SCA2
SCS2
CKV2
CAV2/COVP/N2
SSD2
SSG
SSD
CAT
MDC2
MVC
SMG
MSD/MSDG
FC*
STK
SRL3
SRG3
SRM3
SRT3
MRL2
MRG2
SM-25
ShkAbs
FJ
FK
Spd Contr
Ending

How to order

No switch (built-in magnet for switch)

SCM-Y - LB - 40 ◯ D - 100 ——— J I

With switch (built-in magnet for switch)

SCM-Y - LB - 40 ◯ D - 100 - T0H - D - ◯ J I

Ⓐ Mounting *1

Ⓑ Bore size

Ⓒ Port thread

Ⓓ Cushion

Ⓔ Stroke

Ⓕ Switch model No. *3 *4

Ⓖ Switch quantity

Ⓗ Switch mounting

Ⓘ Option *5, *7

Ⓙ Accessory *8

Code	Description
Ⓐ Mounting	
00	Basic
LB	Axial foot
FA	Rod side flange
FB	Head side flange
CA	Eye bracket
TA	Rod side trunnion
TB	Head side trunnion
Ⓑ Bore size (mm)	
20	ø20
25	ø25
32	ø32
40	ø40
Ⓒ Port thread	
Blank	Rc thread
N	NPT thread (made-to-order product)
G	G thread (made-to-order product)
Ⓓ Cushion	
D	With two-sided rubber cushion

Ⓔ Stroke (mm)

Bore size	Stroke *2	Custom stroke
ø20 to ø40	5 to 200	In 1 mm increments

Ⓕ Switch model No.

Axial lead wire	Radial lead wire	Contact	Voltage AC	Voltage DC	Indicator	Lead wire
T0H*	T0V*	Reed	●	●	1-color LED	2-wire
T5H*	T5V*	Reed	●	●	No indicator lamp	2-wire
T8H*	T8V*	Reed	●	●	1-color LED	2-wire
T1H*	T1V*	Proximity	●		1-color LED	2-wire
T2H*	T2V*	Proximity		●	1-color LED	2-wire
T3H*	T3V*	Proximity		●	1-color LED	3-wire
T3PH*	T3PV*	Proximity		●	1-color LED	3-wire
T2WH*	T2WV*	Proximity		●	2-color LED	2-wire
T2YH*	T2YV*	Proximity		●	2-color LED	2-wire
T3WH*	T3WV*	Proximity		●	2-color LED	3-wire
T3YH*	T3YV*	Proximity		●	2-color LED	3-wire
T2YD*	-	Proximity		●	2-color LED for AC magnetic field	2-wire
T2YDT*	-	Proximity		●	2-color LED for AC magnetic field	2-wire
T2JH*	T2JV*	Proximity		●	1-color LED off-delay	2-wire

*** Lead wire length**

Blank	1 m (standard)
3	3 m (option)
5	5 m (option)

Ⓖ Switch quantity

R	1 on rod side
H	1 on head side
D	2
T	3
4	4 (when there are more than 4 switches, indicate switch quantity.)

Ⓗ Switch mounting

Blank	Rail method
Z	Band method

Ⓘ Option

		Max. ambient temp.	Instantaneous max. temp.
J	Bellows material	100°C	200°C
L	Bellows material	250°C	400°C
Q	Switch rail included at shipment		
M	Piston rod material (stainless steel)		
P6	Copper and PTFE free		

Ⓙ Accessory

I	Rod eye
Y	Rod clevis (pin and snap ring included)
B2	Clevis bracket

⚠ Precautions for model No. selection

*1 : Mounting bracket will be shipped with the product.
*2 : Refer to page 260 for the number of installed switches and the min. stroke.
*3 : Switches other than Ⓕ Switch model No. are also available. (Made to order) Refer to Ending Page 1 for details.
*4 : T8H/V switches cannot be mounted when the switch mounting style is the rail.
*5 : The instantaneous max. temperature is the temperature when sparks, cutting chips, etc., instantaneously contact the bellows.
*6 : Refer to Ending Page 85 for custom specifications of rod end form.
*7 : "Q" (switch rail enclosed at shipment) is not available for the "Z" switch mounting.
*8 : "I" and "Y" cannot be selected together.
*9 : Switches are shipped with the product. Contact CKD if assembling before shipment is necessary.

[Example of model No.]

SCM-Y-LB-40D-100-T0H-D-JI

Model: Round shaped cylinder, single acting/pull

Ⓐ Mounting	: Axial foot
Ⓑ Bore size	: ø40 mm
Ⓒ Port thread	: Rc thread
Ⓓ Cushion	: With two-sided rubber cushion
Ⓔ Stroke	:100 mm
Ⓕ Switch model No.	: Reed T0H switch, lead wire 1 m
Ⓖ Switch quantity	: 2
Ⓗ Switch mounting	: Rail
Ⓘ Option	: Bellows material/max. ambient temperature 100°C
Ⓙ Accessory	: Rod eye

How to order mounting bracket

Bore size (mm) / Mounting bracket	ø20	ø25	ø32	ø40
Foot (LB)	SCM-LB-20	SCM-LB-25	SCM-LB-32	SCM-LB-40
Flange (FA/FB)	SCM-FA-20	SCM-FA-25	SCM-FA-32	SCM-FA-40
Eye bracket (CA)	SCM-CA-20	SCM-CA-25	SCM-CA-32	SCM-CA-40
Trunnion (TA/TB)	SCM-TA-20	SCM-TA-25	SCM-TA-32	SCM-TA-40

*1: All mounting brackets are supplied with mounting bolts.
*2: The foot mounting bracket is provided as 2 pcs./set.

How to order switch

[Switch mounting: Rail]

● Switch body + mounting rail set

SCM - T0H - D - 40 - 100

- T0H: Switch model No. (Item Ⓕ on page 262)
- D: Switch quantity (Item Ⓖ on page 262)
- 40: Bore size (Item Ⓑ on page 262)
- 100: Stroke (Item Ⓔ on page 262) (*1)

● Mounting rail only

SCM - T - 40 - 100

- T: Mounting rail
- 40: Bore size (Item Ⓑ on page 262)
- 100: Stroke (Item Ⓔ on page 262) (*1) (*2)

*1: Indicate X if the stroke exceeds 300 mm.
If exceeding 300 mm, a short rail (with 100 mm switch adjustment length) will be included per switch.
*2: If indicating X when ordering mounting rails only, order the same number of rails as that of applicable switches.

[Switch mounting: Band]

● Switch body + mounting bracket set + band

SCM - T2H* - 40 - Z

- T2H*: Switch model No. (Item Ⓕ on page 262)
- 40: Bore size (Item Ⓑ on page 262)

● Mounting bracket set + band

SCM - Z - 40

- 40: Bore size (Item Ⓑ on page 262)

[Switch body only]

SW - T0H

- T0H: Switch model No. (Item Ⓕ on page 262)

Theoretical thrust table

(Unit: N)

Bore size (mm)	Working pressure MPa								
	0.2	0.3	0.4	0.5	0.6	0.7	0.8	0.9	1.0
ø20	15	41	68	94	$1.20x10^2$	$1.47x10^2$	$1.73x10^2$	$2.00x10^2$	$2.26x10^2$
ø25	42	84	$1.25x10^2$	$1.66x10^2$	$2.07x10^2$	$2.48x10^2$	$2.90x10^2$	$3.31x10^2$	$3.72x10^2$
ø32	83	$1.52x10^2$	$2.22x10^2$	$2.91x10^2$	$3.60x10^2$	$4.29x10^2$	$4.98x10^2$	$5.67x10^2$	$6.36x10^2$
ø40	$1.11x10^2$	$2.17x10^2$	$3.22x10^2$	$4.28x10^2$	$5.33x10^2$	$6.39x10^2$	$7.44x10^2$	$8.50x10^2$	$9.56x10^2$

Note: The load above indicates thrust excluding the spring force at the pull end.

Internal structure and parts list

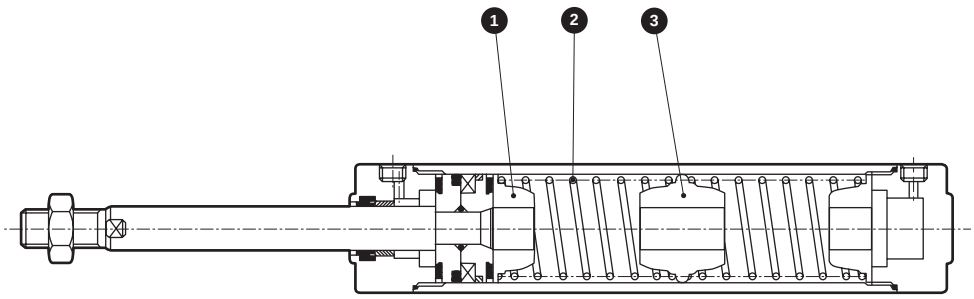

No.	Part name	Material	Remarks
1	Spring holder A	Aluminum alloy	
2	Coil spring	Piano wire	Electrodeposition
3	Spring holder B	Aluminum alloy	

Parts other than the above are the same as the double acting.

Repair parts list

Numbering of repair parts follows that in the internal structure of the SCM Series (page 236).

Bore size (mm)	Kit No.	Repair parts No.
ø20	SCM-Y-20DK	3 6 8 10 13
ø25	SCM-Y-25DK	
ø32	SCM-Y-32DK	
ø40	SCM-Y-40DK	

SCP*3
CMK2
CMA2
SCM
SCG
SCA2
SCS2
CKV2
CAV2/COVP/N2
SSD2
SSG
SSD
CAT
MDC2
MVC
SMG
MSD/MSDG
FC*
STK
SRL3
SRG3
SRM3
SRT3
MRL2
MRG2
SM-25
ShkAbs
FJ
FK
Spd Contr
Ending

dimensions

CAD

● Single acting pull (00)

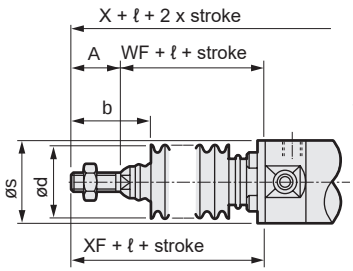

With bellows

• Switch mounting: Rail

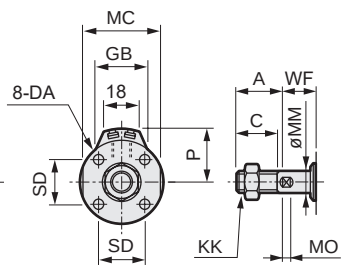

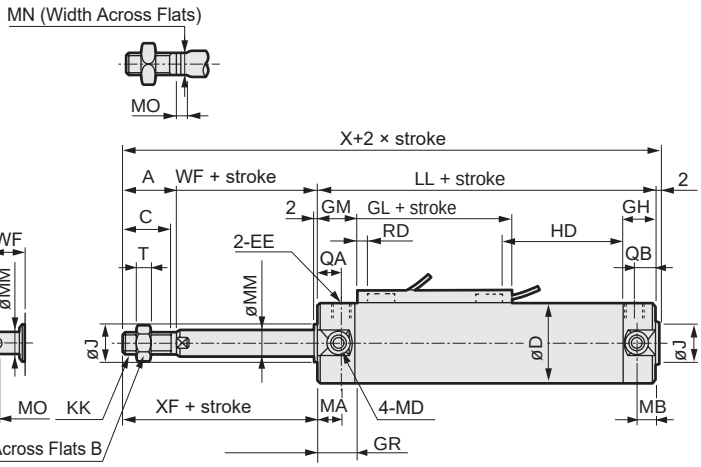

ø20/ø25

• Switch mounting: Band

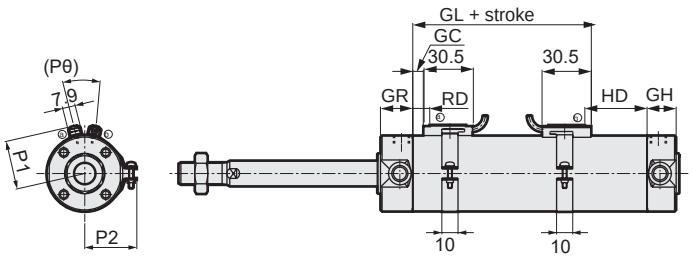

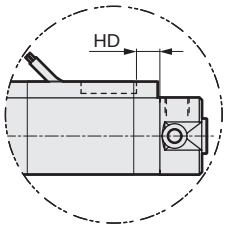

In the case of T2W, T3W

***1: Refer to page 345 for RD, HD and protruding dimensions of the 2-color LED, off-delay, AC magnetic field proof, T1H/V and T8H/V switches.**

Code	Basic (00) Basic dimensions										LL									
Bore size (mm)	A	B	C	D	DA	EE	GR	GH	J	KK	5 to 50	Over 50 to 100	Over 100 to 150	Over 150 to 200	MA	MB	MC	MD	MM	MN
ø20	18	13	16	26	M4 depth 6.5	Rc1/8	19	17	12	M8	96	123	150	177	11	11	24	M5	8	6
ø25	22	17	20	31	M5 depth 6.5	Rc1/8	19	17	14	M 10 x 1.25	99	129	159	189	11	11	29	M6	10	8
ø32	22	17	20	38	M5 depth 7.5	Rc1/8	19	17	18	M 10 x 1.25	101	131	161	191	11	10	36	M8	12	10
ø40	30	22	27	47	M6 depth 12	Rc1/8	20	19	25	M 14 x 1.5	108	138	168	198	12	10	44	M10	16	14

Code												With bellows				Switch mounting: Rail			
Bore size (mm)	MO	QA	QB	SD	T	WF	X 5 to 50	X Over 50 to 100	X Over 100 to 150	X Over 150 to 200	XF	b	d	s	ℓ	GM	GL	P	GB
ø20	4	12	10	14	5	17	133	160	187	214	35	30	30	25.7	(stroke/3) + 18.5	20.5	30	19.5	23
ø25	5	12	10	16.5	6	18	141	171	201	231	40	35	30	30.7	(stroke/3) + 20.5	20.5	30	22	24.4
ø32	5.5	12	10	20	6	18	143	173	203	233	40	31.5	35	37.7	(stroke/3) + 19	20.5	32	25.5	25
ø40	6	13	12	26	8	20	160	190	220	250	50	40	35	46.7	(stroke/3) + 18.5	21.5	36	30	25.7

Code																Switch mounting: Band			
Bore size (mm)	HD T0/T5 5 to 50	HD T0/T5 Over 50 to 100	HD T0/T5 Over 100 to 150	HD T0/T5 Over 150 to 200	HD T2,T3 5 to 50	HD T2,T3 Over 50 to 100	HD T2,T3 Over 100 to 150	HD T2,T3 Over 150 to 200	HD T2W,T3W 5 to 50	HD T2W,T3W Over 50 to 100	HD T2W,T3W Over 100 to 150	HD T2W,T3W Over 150 to 200	RD T0/T5	RD T2 T3	RD T2W T3W	HD T0/T5 5 to 50	HD T0/T5 Over 50 to 100	HD T0/T5 Over 100 to 150	HD T0/T5 Over 150 to 200
ø20	31.0	58.0	85.0	112.0	34.0	61.0	88.0	115.0	36.5	63.5	90.5	117.5	5	6	7	32.5	59.5	86.5	113.5
ø25	33.0	63.0	93.0	123.0	36.0	66.0	96.0	126.0	38.5	68.5	98.5	128.5	6	7	8	34.5	64.5	94.5	124.5
ø32	34.0	64.0	94.0	124.0	37.0	67.0	97.0	127.0	39.5	69.5	99.5	129.5	7	8	9	35.5	65.5	95.5	125.5
ø40	36.0	66.0	96.0	126.0	39.0	69.0	99.0	129.0	41.5	71.5	101.5	131.5	9	10	11	37.5	67.5	97.5	127.5

Code																			
Bore size (mm)	T2,T3 5 to 50	T2,T3 Over 50 to 100	T2,T3 Over 100 to 150	T2,T3 Over 150 to 200	T2W,T3W 5 to 50	T2W,T3W Over 50 to 100	T2W,T3W Over 100 to 150	T2W,T3W Over 150 to 200	RD T0/T5	RD T2 T3	RD T2W T3W	GC	P1	P2	P3	Pθ
ø20	33.5	60.5	87.5	114.5	36.5	63.5	90.5	117.5	6.5	7.5	7	2.5	19.6	21.5	14	(38°)
ø25	35.5	65.5	95.5	125.5	38.5	68.5	98.5	128.5	7.5	8.5	8	3.5	22.1	23.9	14	(34°)
ø32	36.5	66.5	96.5	126.5	39.5	69.5	99.5	129.5	8.5	9.5	9	4.5	25.6	27.6	16	(30°)
ø40	38.5	68.5	98.5	128.5	41.5	71.5	101.5	131.5	10.5	11.5	11	6.5	30.2	32.1	16	(26°)

* Installation dimensions other than X and LL mounting are the same as those of SCM (double acting). Pages 240 to 251.
* For the dimensions of the accessories, refer to pages 252 and 253.

MEMO

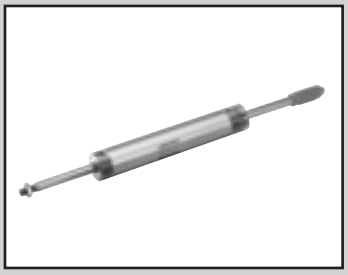

Round shaped cylinder/
Double acting/stroke adjustable/push

SCM-P Series

● Bore size:ø20/ø25/ø32/ø40/ø50/ø63

JIS symbol

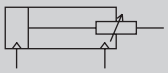

RoHS CAD

Specifications

Item	SCM-P					
Bore size mm	ø20	ø25	ø32	ø40	ø50	ø63
Actuation	Double acting/stroke adjustable (push)					
Working fluid	Compressed air					
Max. working pressure MPa	1.0 (≈150 psi, 10 bar)					
Min. working pressure MPa	0.15 (≈22 psi, 1.5 bar)				0.1 (≈15 psi, 1 bar)	
Proof pressure MPa	1.6 (≈230 psi, 16 bar)					
Ambient temperature °C	-10 (14°F) to 60 (140°F) (no freezing)					
Port size	Rc1/8				Rc1/4	
Stroke tolerance mm	+1.4 0				+2.3 0	
Working piston speed mm/s	30 to 1000 (Operate within the allowable absorbed energy.)					
Cushion	Rubber cushion					
Lubrication	Not required (use turbine oil ISO VG32 if necessary for lubrication)					
Adjustable stroke range mm	25, 50					
Allowable absorbed energy J	0.1	0.2	0.5	0.9	1.6	1.6

Stroke

Bore size (mm)	Standard stroke (mm)	Max. stroke (mm)	Min. stroke (mm)
ø20	25, 50, 75 100, 125, 150 200, 250, 300	600	10
ø25			
ø32			
ø40			
ø50			
ø63			

*1: The custom stroke is available in 1 mm increments.

Number of installed switches and min. stroke (mm)

● Switch mounting method: Rail

Switch quantity	1				2				3				4				5			
Bore size (mm)	Proximity			Reed	Proximity			Reed	Proximity			Reed	Proximity			Reed	Proximity			Reed
	T2, T3	T2W, T3W	T*Y*		T2, T3	T2W, T3W	T*Y*		T2, T3	T2W, T3W	T*Y*		T2, T3	T2W, T3W	T*Y*		T2, T3	T2W, T3W	T*Y*	
ø20	10				25				50	70	70	55	55	70	70	55	75	110	110	90
ø25	10				25				50	70	70	55	55	70	70	55	75	110	110	90
ø32	10				25				50	70	70	55	55	70	70	55	75	110	110	90
ø40	10				25				50	70	70	55	55	70	70	55	75	110	110	90
ø50	10				25				50	65	65	55	55	65	65	55	75	110	110	90
ø63	10				25				50	65	65	55	55	65	65	55	75	110	110	90

● Switch mounting: Band

Switch quantity	1				2				3				4				5			
Bore size (mm)	Proximity			Reed	Proximity			Reed	Proximity			Reed	Proximity			Reed	Proximity			Reed
	T2, T3	T2W, T3W	T*Y*		T2, T3	T2W, T3W	T*Y*		T2, T3	T2W, T3W	T*Y*		T2, T3	T2W, T3W	T*Y*		T2, T3	T2W, T3W	T*Y*	
ø20	10				25	30	35	25	50	55	55	50	75	75	80	70	95	100	100	95
ø25	10				25	30	35	25	50	55	55	50	75	75	80	70	95	100	100	95
ø32	10				25	30	35	25	50	55	55	50	75	75	80	70	95	100	100	95
ø40	10				25	30	35	25	50	55	55	50	75	75	80	70	95	100	100	95
ø50	10				25	30	35	25	50	55	55	50	75	75	80	70	95	100	100	95
ø63	10				25	30	35	25	50	55	55	50	75	75	80	70	95	100	100	95

*1: For types with one switch, when the stroke is between 10 and 24 mm, the trunnion mounting is not available since the switch rail mounting position is different. Refer to page 345 for mounting position.

Switch specifications

● 1-color/2-color LED

Item	2-wire proximity	2-wire proximity			3-wire proximity				2-wire reed							2-wire proximity
	T1H/ T1V	T2H/T2V/ T2JH/T2JV	T2YH/ T2YV	T2WH/ T2WV	T3H/ T3V	T3PH/ T3PV	T3YH/ T3YV	T3WH/ T3WV	T0H/T0V		T5H/T5V		T8H/T8V			T2YD (*4) T2YDT
Applications	For programming controller, relay, compact solenoid valve	Dedicated for programmable controller			For programmable controller, relay				For programmable controller, relay		For programmable controller, relay (no lamp), serial		For programmable controller, relay			Dedicated for programmable controller
Output method	-				NPN output	PNP output	NPN output	NPN output	-							
Pwr. supp. V.	-				10 to 28 VDC				-							
Load voltage	85 to 265 VAC	10 to 30 VDC		24 VDC ±10%	30 VDC or less				12/24 VDC	100/110 VAC	5/12/24 VDC	100/110 VAC	12/24 VDC	110 VAC	220 VAC	24 VDC ±10%
Load current	5 to 100 mA	5 to 20 mA (*3)			100 mA or less		50 mA or less		5 to 50 mA	7 to 20 mA	50 mA or less	20 mA or less	5 to 50 mA	7 to 20 mA	7 to 10 mA	5 to 20 mA
Indicator	LED (Lit when ON)	LED (Lit when ON)	Red/green LED (Lit when ON)	Red/green LED (Lit when ON)	LED (Lit when ON)	Yellow LED (Lit when ON)	Red/green LED (Lit when ON)	Red/green LED (Lit when ON)	LED (Lit when ON)		No indicator lamp		LED (Lit when ON)			Red/green LED (Lit when ON)
Leakage current	≤ 1 mA at 100 VAC, ≤ 2 mA at 200 VAC	1 mA or less			10 μA or less				0 mA							1 mA or less
Weight g	1 m:33 3 m:87 5 m:142	1 m:18 3 m:49 5 m:80	1 m:33 3 m:87 5 m:142	1 m:18 3 m:49 5 m:80	1 m:18 3 m:49 5 m:80		1 m:33 3 m:87 5 m:142	1 m:18 3 m:49 5 m:80	1 m:18 3 m:49 5 m:80				1 m:33 3 m:87 5 m:142			1 m:61 3 m:166 5 m:272

*1: Refer to Ending Page 1 for detailed switch specifications and dimensions.
*2: Switches other than the above models, such as switches with connectors, are also available. Refer to Ending Page 1.
*3: Max. load current: 20 mA at 25°C. The current is lower than 20 mA if the operating ambient temperature around the switch is higher than 25°C. (5 to 10 mA at 60°C)
*4: Switch for AC magnetic field (T2YD/T2YDT) cannot be used in DC magnetic field.

Cylinder weight

(Unit: kg)

Item/mounting / Bore size (mm)	Adjustable stroke range	Product weight when stroke (S) = 0 mm: Basic	Axial foot	Flange	Trunnion	Switch weight (per 1 pc)	Additional weight per S = 10 mm	Added weight /S = 10 mm (with rail)	Band weight per switch
ø20	25	0.18	0.29	0.26	0.19	Refer to the weight in the switch specifications.	0.010	0.012	0.007
	50	0.21	0.31	0.29	0.22				
ø25	25	0.33	0.44	0.43	0.35		0.014	0.016	0.007
	50	0.37	0.48	0.47	0.39				
ø32	25	0.50	0.64	0.64	0.53		0.018	0.020	0.007
	50	0.56	0.71	0.70	0.59				
ø40	25	0.93	1.12	1.13	0.98		0.030	0.032	0.007
	50	1.03	1.22	1.23	1.08				
ø50	25	1.71	2.12	2.05	1.85		0.044	0.046	0.008
	50	1.90	2.31	2.24	2.04				
ø63	25	2.25	2.87	2.75	2.39		0.052	0.054	0.009
	50	2.44	3.06	2.94	2.58				

(Example) Product weight of SCM-P-LB-40D-100-50-T2H-D
- Product weight when S = 0 mm..... 1.22 kg
- Additional weight when S = 100 mm ..... $0.032 \times \frac{100}{10} = 0.32$ kg
- Weight of 2 switches..... 0.036 kg
- Product weight..... 1.22 kg + 0.32 kg + 0.036 kg=1.576 kg

Theoretical thrust table

(Unit: N)

Bore size (mm)	Operating direction	Working pressure MPa: 0.1	0.15	0.2	0.3	0.4	0.5	0.6	0.7	0.8	0.9	1.0
ø20	Push/Pull	-	39.6	52.8	79.2	1.06×10^2	1.32×10^2	1.58×10^2	1.85×10^2	2.11×10^2	2.38×10^2	2.64×10^2
ø25	Push/Pull	-	61.9	82.5	1.24×10^2	1.65×10^2	2.06×10^2	2.47×10^2	2.89×10^2	3.30×10^2	3.71×10^2	4.12×10^2
ø32	Push/Pull	-	1.04×10^2	1.38×10^2	2.07×10^2	2.76×10^2	3.46×10^2	4.15×10^2	4.84×10^2	5.53×10^2	6.22×10^2	6.91×10^2
ø40	Push/Pull	-	1.58×10^2	2.11×10^2	3.17×10^2	4.22×10^2	5.28×10^2	6.33×10^2	7.39×10^2	8.44×10^2	9.50×10^2	1.06×10^3
ø50	Push/Pull	1.65×10^2	2.47×10^2	3.30×10^2	4.95×10^2	6.60×10^2	8.25×10^2	9.90×10^2	1.15×10^3	1.32×10^3	1.48×10^3	1.65×10^3
ø63	Push/Pull	2.80×10^2	4.20×10^2	5.61×10^2	8.41×10^2	1.12×10^3	1.40×10^3	1.68×10^3	1.96×10^3	2.24×10^3	2.52×10^3	2.80×10^3

SCP*3
CMK2
CMA2
SCM
SCG
SCA2
SCS2
CKV2
CAV2/ COVP/N2
SSD2
SSG
SSD
CAT
MDC2
MVC
SMG
MSD/ MSDG
FC*
STK
SRL3
SRG3
SRM3
SRT3
MRL2
MRG2
SM-25
ShkAbs
FJ
FK
Spd Contr
Ending

How to order

No switch (built-in magnet for switch)

SCM-P - LB - 40 ◯ D - 100 - 25 ——— J I

With switch (built-in magnet for switch)

SCM-P - LB - 40 ◯ D - 100 - 25 - T0H - D - ◯ J I

Ⓐ Mounting *1
Ⓑ Bore size
Ⓒ Port thread
Ⓓ Cushion
Ⓔ Stroke
Ⓕ Adjustable stroke range
Ⓖ Switch model No. *3 *4
Ⓗ Switch quantity
Ⓘ Switch mounting
Ⓙ Option *5, *7
Ⓚ Accessory *8

Code	Description
Ⓐ Mounting	
00	Basic
LB	Axial foot
FA	Rod side flange
TA	Rod side trunnion
TB	Head side trunnion

Ⓑ Bore size (mm)	
20	ø20
25	ø25
32	ø32
40	ø40
50	ø50
63	ø63

Ⓒ Port thread	
Blank	Rc thread
N	NPT thread (made-to-order product)
G	G thread (made-to-order product)

Ⓓ Cushion	
D	With two-sided rubber cushion

Ⓔ Stroke (mm)

Bore size	Stroke *2	Custom stroke
ø20 to ø63	**10 to 600**	**In 1 mm increments**

Ⓕ Adjustable stroke range (mm)	
25	25
50	50

Ⓖ Switch model No.

Axial lead wire	Radial lead wire	Contact	Voltage AC	Voltage DC	Indicator	Lead wire
T0H*	**T0V***	Reed	●	●	1-color LED	2-wire
T5H*	**T5V***	Reed	●	●	No indicator lamp	2-wire
T8H*	**T8V***	Reed	●	●	1-color LED	2-wire
T1H*	**T1V***	Proximity	●		1-color LED	2-wire
T2H*	**T2V***	Proximity		●	1-color LED	2-wire
T3H*	**T3V***	Proximity		●	1-color LED	3-wire
T3PH*	**T3PV***	Proximity		●	1-color LED	3-wire
T2WH*	**T2WV***	Proximity		●	2-color LED	2-wire
T2YH*	**T2YV***	Proximity		●	2-color LED	2-wire
T3WH*	**T3WV***	Proximity		●	2-color LED	3-wire
T3YH*	**T3YV***	Proximity		●	2-color LED	3-wire
T2YD*	**-**	Proximity		●	2-color LED AC magnetic field	2-wire
T2YDT*	**-**	Proximity		●	2-color LED AC magnetic field	2-wire
T2JH*	**T2JV***	Proximity		●	1-color LED off-delay	2-wire

*** Lead wire length**	
Blank	1 m (standard)
3	3 m (option)
5	5 m (option)

Ⓗ Switch quantity	
R	1 on rod side
H	1 on head side
D	2
T	3
4	4 (when there are more than 4 switches, indicate switch quantity.)

Ⓘ Switch mounting	
Blank	Rail method
Z	Band method

Ⓙ Option

		Max. ambient temp.	Instantaneous max. temp.
J	Bellows	100°C	200°C
L	Bellows	250°C	400°C
Q	Switch rail included at shipment		
M	Piston rod material (stainless steel)		
P6	Copper and PTFE free		

Ⓚ Accessory	
I	Rod eye
Y	Rod clevis (pin and snap ring included)
B2	Clevis bracket

⚠ Precautions for model No. selection

*1 : A mounting bracket will be shipped with the product if LB, FB or TB is selected. FA/TA is shipped with the product.
*2 : Refer to page 266 for the number of installed switches and the min. stroke.
*3 : Switches other than Ⓖ Switch model No. are also available. (Made to order) Refer to Ending Page 1 for details.
*4 : T8H/V switches cannot be mounted when the bore size is from ø20 to ø40 and the switch mounting style is the rail.
*5 : The instantaneous max. temperature is the temperature when sparks, cutting chips, etc., instantaneously contact the bellows.
*6 : Refer to Ending Page 85 for custom specifications of rod end form.
*7 : "Q" (switch rail enclosed at shipment) is not available for the "Z" switch mounting.
*8 : "I" and "Y" cannot be selected together.
*9 : Switches are shipped with the product. Contact CKD if assembling before shipment is necessary.

[Example of model No.]

SCM-P-LB-40D-100-25-T0H-D-JI

Model: Round shaped cylinder, double acting/stroke adjustable (push)

Ⓐ Mounting	: Axial foot
Ⓑ Bore size	: ø40 mm
Ⓒ Port thread	: Rc thread
Ⓓ Cushion	: With two-sided rubber cushion
Ⓔ Stroke	: 100 mm
Ⓕ Adjustable stroke range	: 25 mm
Ⓖ Switch model No.	: Reed T0H switch, lead wire 1m
Ⓗ Switch quantity	: 2
Ⓘ Switch mounting	: Rail method
Ⓙ Option	: Bellows material for max. ambient temperature 100°C
Ⓚ Accessory	: Rod eye

How to order switch

[Switch mounting: Rail]

● Switch body + mounting rail set

SCM - T0H - D - 40 - 100

- T0H: Switch model No. (Item Ⓖ on page 268)
- D: Switch quantity (Item Ⓗ on page 268)
- 40: Bore size (Item Ⓑ on page 268)
- 100: Stroke (Item Ⓔ on page 268) (*1)

● Mounting rail only

SCM - T - 40 - 100

- T: Mounting rail
- 40: Bore size (Item Ⓑ on page 268)
- 100: Stroke (Item Ⓔ on page 268) (*1) (*2)

*1: Indicate X if the stroke exceeds 300 mm.
If exceeding 300 mm, a short rail (with 100 mm switch adjustment length) will be included per switch.
*2: If indicating X when ordering mounting rails only, order the same number of rails as that of applicable switches.

[Switch mounting: Band]

● Switch body + mounting bracket set + band

SCM - T2H* - 40 - Z

- T2H*: Switch model No. (Item Ⓖ on page 268)
- 40: Bore size (Item Ⓑ on page 268)

● Mounting bracket set + band

SCM - Z - 40

- 40: Bore size (Item Ⓑ on page 268)

[Switch body only]

SW - T0H

- T0H: Switch model No. (Item Ⓖ on page 268)

How to order mounting bracket

Bore size (mm) / Mounting bracket	ø20	ø25	ø32	ø40	ø50	ø63
Foot (LB)	SCM-LB-20	SCM-LB-25	SCM-LB-32	SCM-LB-40	SCM-LB-50	SCM-LB-63
Flange (FA/FB)	SCM-FA-20	SCM-FA-25	SCM-FA-32	SCM-FA-40	SCM-FA-50	SCM-FA-63
Trunnion (TA/TB)	SCM-TA-20	SCM-TA-25	SCM-TA-32	SCM-TA-40	SCM-TA-50	SCM-TA-63

*1: All mounting brackets are supplied with mounting bolts.
*2: The foot mounting bracket is provided as 2 pcs./set.

Internal structure and parts list

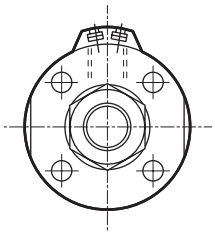

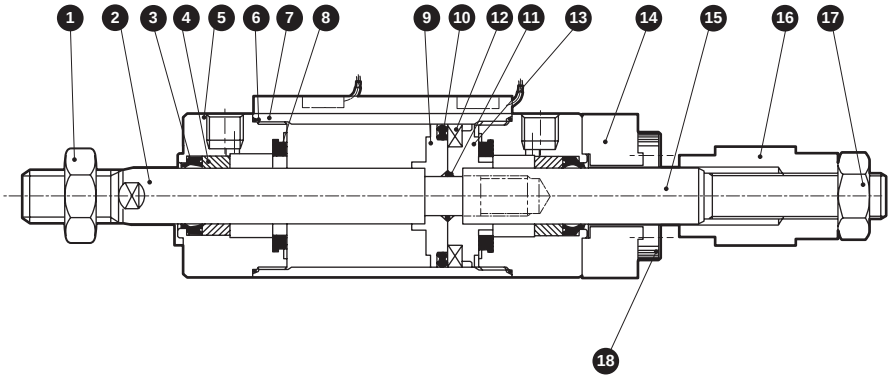

No.	Part name	Material	Remarks
1	Rod nut	Steel	Nickeling
2	Piston rod R	ø20, ø25: Stainless steel ø32 to ø63: Steel	Industrial chrome plating
3	Rod packing	Nitrile rubber	
4	Bush	Oil impregnated bearing alloy *1	
5	Rod cover	Aluminum alloy	Hard alumite
6	Cylinder gasket	Nitrile rubber	
7	Cylinder tube	Aluminum alloy	Hard alumite
8	Cushion rubber	Urethane rubber	
9	Piston R	ø20 to ø40: Aluminum alloy ø50, ø63: Aluminum alloy die-casting	
10	Piston packing	Nitrile rubber	
11	Piston gasket	Nitrile rubber	
12	Magnet	Plastic	
13	Piston H	ø20 to ø40: Aluminum alloy ø50, ø63: Aluminum alloy die-casting	
14	Cover	Steel	Zinc chromate
15	Piston rod H	Steel	Industrial chrome plating
16	Stopper	Steel	Zinc chromate
17	Hexagon nut	Steel	Nickeling
18	Hex socket screw	Alloy steel	Black finish

*1: Oil-impregnated cast iron bearing for copper and PTFE free.

Repair parts list

Bore size (mm)	Kit No.	Repair parts No.
ø20	SCM-D-20DK	3 6 8 10
ø25	SCM-D-25DK	
ø32	SCM-D-32DK	
ø40	SCM-D-40DK	
ø50	SCM-D-50DK	
ø63	SCM-D-63DK	

*1: Specify the kit No. when placing an order.

Dimensions

● Double acting/adjustable stroke (push) • Switch mounting: Rail

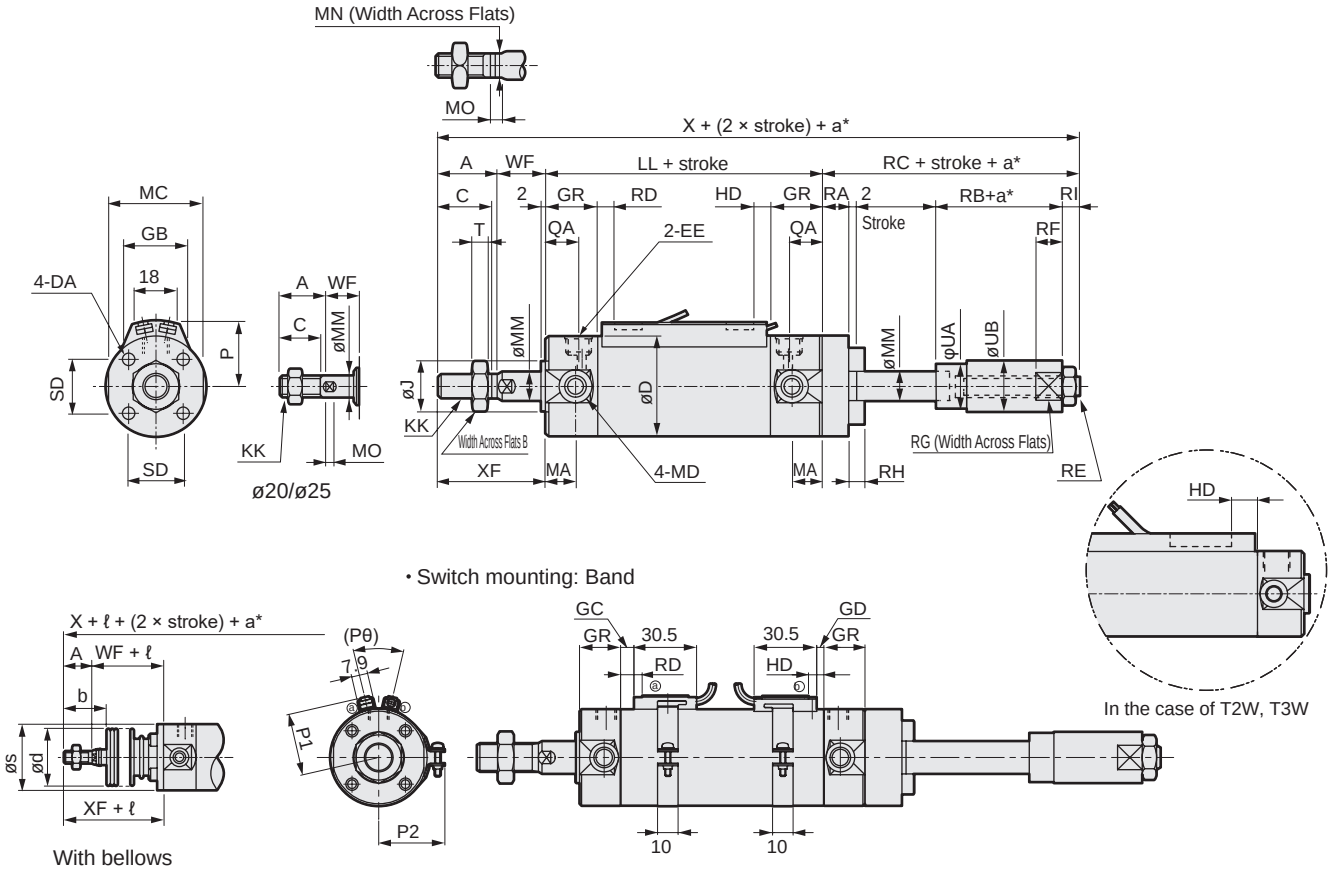

* a: Adjustable stroke.

***1: Refer to page 345 for RD, HD and protruding dimensions of the 2-color LED, off-delay, AC magnetic field proof, T1H/V and T8H/V switches.**

Code	Basic (00) Basic dimensions																				
Bore size (mm)	A	B	C	D	DA	EE	GR	J	KK	LL	MA	MC	MD	MM	MN	MO	QA	SD	T	WF	X	XF
ø20	18	13	16	26	M4 depth 6.5	Rc1/8	19	12	M8	71	11	24	M5	8	6	4	12	14	5	17	141	35
ø25	22	17	20	31	M5 depth 6.5	Rc1/8	19	14	M 10 x 1.25	71	11	29	M6	10	8	5	12	16.5	6	18	152	40
ø32	22	17	20	38	M5 depth 7.5	Rc1/8	19	18	M 10 x 1.25	73	11	36	M8	12	10	5.5	12	20	6	18	154	40
ø40	30	22	27	47	M6 depth 12	Rc1/8	20	25	M 14 x 1.5	79	12	44	M10	16	14	6	13	26	8	20	188	50
ø50	35	27	32	58	M8 depth 16	Rc1/4	25	30	M 18 x 1.5	93	13	55	M12	20	17	8	15	32	11	23	217	58
ø63	35	27	32	72	M10 depth 16	Rc1/4	25	32	M 18 x 1.5	93	13	69	M14	20	17	8	15	38	11	23	217	58

Code											With bellows				Switch mounting: Rail					
Bore size (mm)	RA	RB	RC	RE	RI	RF	RG	RH	UA	UB	b	d	s	ℓ	P	GB	HD T0/T5	HD T2/T2R T3/T3P	HD T2W T3W	RD T0/T5
ø20	8	19	35	M6	6	7	10	4	11.5	12	30	30	25.7	(stroke/3) + 18.5	19.5	23	3.0	6.5	8.5	7.5
ø25	10	22	41	M8	7	9	14	5	13.5	16	35	30	30.7	(stroke/3) + 20.5	22	24.4	2.0	5.5	7.5	8.5
ø32	10	22	41	M8	7	10	17	5	17.5	20	31.5	35	37.7	(stroke/3) + 19	25.5	25	3.0	6.5	8.5	9.5
ø40	18	30	59	M 12 x 1.5	9	12	22	6	24	25	40	35	46.7	(stroke/3) + 18.5	30	25.7	5.0	8.5	10.5	11.5
ø50	20	32	66	M 16 x 1.5	12	15	30	8	29	35	46	40	57.7	(stroke/3.6) + 18.5	35.5	26.2	7.5	11.0	13.0	13.0
ø63	20	32	66	M 16 x 1.5	12	15	30	10	29	35	46	40	71.7	(stroke/3.6) + 18.5	42.5	26.5	7.5	11.0	13.0	13.0

Code			Switch mounting: Band															
Bore size (mm)	RD T2/T2R T3/T3P	RD T2W T3W	GD T0/T5	GD T2,T3	GD T2W T3W	GC T0/T5	GC T2,T3	GC T2W T3W	HD T0/T5	HD T2,T3	HD T2W T3W	RD T0/T5	RD T2,T3	RD T2W T3W	P1	P2	P3	Pθ
ø20	7.5	9.5	2.5	2.5	4.5	3.5	3.5	5.5	6.5	6.5	8.5	7.5	7.5	9.5	19.6	21.5	14	(38°)
ø25	8.5	10.5	1.5	1.5	3.5	4.5	4.5	6.5	5.5	5.5	7.5	8.5	8.5	10.5	22.1	23.9	14	(34°)
ø32	9.5	11.5	2.5	2.5	4.5	5.5	5.5	7.5	6.5	6.5	8.5	9.5	9.5	11.5	25.6	27.6	16	(30°)
ø40	11.5	13.5	4.5	4.5	6.5	7.5	7.5	9.5	8.5	8.5	10.5	11.5	11.5	13.5	30.2	32.1	16	(26°)
ø50	13.0	15.0	7.0	7.0	9.0	9.0	9.0	11.0	11.0	11.0	13.0	13.0	13.0	15.0	35.7	37.4	16	(22°)
ø63	13.0	15.0	7.0	7.0	9.0	9.0	9.0	11.0	11.0	11.0	13.0	13.0	13.0	15.0	42.7	44.4	16	(20°)

* Installation dimensions of the mounting are the same as those of SCM (double acting). Refer to pages 240 to 251.
* For the dimensions of the accessories, refer to pages 252 and 253.

Round shaped cylinder/
Double acting/stroke adjustable/pull

SCM-R Series

● Bore size:ø20/ø25/ø32/ø40/ø50/ø63

JIS symbol

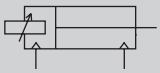

RoHS CAD

Specifications

Item	SCM-R					
Bore size mm	ø20	ø25	ø32	ø40	ø50	ø63
Actuation	Double acting/stroke adjustable (pull)					
Working fluid	Compressed air					
Max. working pressure MPa	1.0 (≈150 psi, 10 bar)					
Min. working pressure MPa	0.1 (≈15 psi, 1 bar)				0.05 (≈7.3 psi, 0.5 bar)	
Proof pressure MPa	1.6 (≈230 psi, 16 bar)					
Ambient temperature °C	-10 (14°F) to 60 (140°F) (no freezing)					
Port size	Rc1/8				Rc1/4	
Stroke tolerance mm	$^{+1.4}_{0}$ (to 1000)			$^{+1.4}_{0}$ (to 1500)	$^{+2.3}_{0}$(to 1000), $^{+2.7}_{0}$(to 1500)	
Working piston speed mm/s	30 to 1000 (Operate within the allowable absorbed energy.)					
Cushion	Rubber cushion					
Lubrication	Not required (use turbine oil ISO VG32 if necessary for lubrication)					
Adjustable stroke range mm	25, 50					
Allowable absorbed energy J	0.1	0.2	0.5	0.9	1.6	1.6

Stroke

Bore size (mm)	Standard stroke (mm)	Max. stroke (mm)	Min. stroke (mm)
ø20	25, 50, 75 100, 125, 150 200, 250, 300	1000	10
ø25			
ø32			
ø40		1500	
ø50			
ø63			

*1: The custom stroke is available in 1 mm increments.
*2: Stroke of more than 600 mm will be made to order. Contact CKD for details.

Number of installed switches and min. stroke (mm)

● Switch mounting method: Rail

Switch quantity	1				2				3				4				5			
Bore size (mm)	Proximity			Reed	Proximity			Reed	Proximity			Reed	Proximity			Reed	Proximity			Reed
	T2, T3	T2W, T3W	T*Y*		T2, T3	T2W, T3W	T*Y*		T2, T3	T2W, T3W	T*Y*		T2, T3	T2W, T3W	T*Y*		T2, T3	T2W, T3W	T*Y*	
ø20	10				25				50	70	70	55	55	70	70	55	75	110	110	90
ø25	10				25				50	70	70	55	55	70	70	55	75	110	110	90
ø32	10				25				50	70	70	55	55	70	70	55	75	110	110	90
ø40	10				25				50	70	70	55	55	70	70	55	75	110	110	90
ø50	10				25				50	65	65	55	55	65	65	55	75	110	110	90
ø63	10				25				50	65	65	55	55	65	65	55	75	110	110	90

● Switch mounting: Band

Switch quantity	1				2				3				4				5			
Bore size (mm)	Proximity			Reed	Proximity			Reed	Proximity			Reed	Proximity			Reed	Proximity			Reed
	T2, T3	T2W, T3W	T*Y*		T2, T3	T2W, T3W	T*Y*		T2, T3	T2W, T3W	T*Y*		T2, T3	T2W, T3W	T*Y*		T2, T3	T2W, T3W	T*Y*	
ø20	10				25	30	35	25	50	55	55	50	75	75	80	70	95	100	100	95
ø25	10				25	30	35	25	50	55	55	50	75	75	80	70	95	100	100	95
ø32	10				25	30	35	25	50	55	55	50	75	75	80	70	95	100	100	95
ø40	10				25	30	35	25	50	55	55	50	75	75	80	70	95	100	100	95
ø50	10				25	30	35	25	50	55	55	50	75	75	80	70	95	100	100	95
ø63	10				25	30	35	25	50	55	55	50	75	75	80	70	95	100	100	95

*1: For types with one switch, when the stroke is between 10 and 24 mm, the trunnion mounting is not available since the switch rail mounting position is different. Refer to page 345 for mounting position.

Switch specifications

● 1-color/2-color LED

Item	2-wire proximity	2-wire proximity			3-wire proximity				2-wire reed							2-wire proximity
	T1H/ T1V	T2H/T2V/ T2JH/T2JV	T2YH/ T2YV	T2WH/ T2WV	T3H/ T3V	T3PH/ T3PV	T3YH/ T3YV	T3WH/ T3WV	T0H/T0V		T5H/T5V		T8H/T8V			T2YD (*4) T2YDT
Applications	For programming controller, relay, compact solenoid valve	Dedicated for programmable controller			For programmable controller, relay				For programmable controller, relay		For programmable controller, relay (no lamp), serial		For programmable controller, relay			Dedicated for programmable controller
Output method	-				NPN output	PNP output	NPN output	NPN output	-							
Pwr. supp. V.	-				10 to 28 VDC				-							
Load voltage	85 to 265 VAC	10 to 30 VDC		24 VDC ±10%	30 VDC or less				12/24 VDC	100/110 VAC	5/12/24 VDC	100/110 VAC	12/24 VDC	110 VAC	220 VAC	24 VDC ±10%
Load current	5 to 100 mA	5 to 20 mA (*3)			100 mA or less		50 mA or less		5 to 50 mA	7 to 20 mA	50 mA or less	20 mA or less	5 to 50 mA	7 to 20 mA	7 to 10 mA	5 to 20 mA
Indicator	LED (Lit when ON)	LED (Lit when ON)	Red/green LED (Lit when ON)	Red/green LED (Lit when ON)	LED (Lit when ON)	Yellow LED (Lit when ON)	Red/green LED (Lit when ON)	Red/green LED (Lit when ON)	LED (Lit when ON)		No indicator lamp		LED (Lit when ON)			Red/green LED (Lit when ON)
Leakage current	≤ 1 mA at 100 VAC, ≤ 2 mA at 200 VAC	1 mA or less			10 μA or less				0 mA							1 mA or less
Weight g	1 m:33 3 m:87 5 m:142	1 m:18 3 m:49 5 m:80	1 m:33 3 m:87 5 m:142	1 m:18 3 m:49 5 m:80	1 m:18 3 m:49 5 m:80		1 m:33 3 m:87 5 m:142	1 m:18 3 m:49 5 m:80	1 m:18 3 m:49 5 m:80				1 m:33 3 m:87 5 m:142			1 m:61 3 m:166 5 m:272

*1: Refer to Ending Page 1 for detailed switch specifications and dimensions.
*2: Switches other than the above models, such as switches with connectors, are also available. Refer to Ending Page 1.
*3: Max. load current: 20 mA at 25°C. The current is lower than 20 mA if the operating ambient temperature around the switch is higher than 25˚C. (5 to 10 mA at 60°C)
*4: Switch for AC magnetic field (T2YD/T2YDT) cannot be used in DC magnetic field.

Cylinder weight

(Unit: kg)

Item/mounting / Bore size (mm)	Adjustable stroke range	Product weight when stroke (S) = 0 mm: Basic	Axial foot	Flange	Trunnion	Switch weight (per 1 pc)	Additional weight per S = 10 mm	Added weight /S = 10 mm (with rail)	Band weight per switch
ø20	25	0.14	0.25	0.17	0.15	Refer to the weight in the switch specifications.	0.010	0.012	0.007
	50	0.15	0.25	0.18	0.16				
ø25	25	0.25	0.36	0.29	0.27		0.014	0.016	0.007
	50	0.26	0.37	0.30	0.28				
ø32	25	0.37	0.52	0.43	0.40		0.018	0.020	0.007
	50	0.38	0.52	0.44	0.41				
ø40	25	0.70	0.89	0.78	0.75		0.030	0.032	0.007
	50	0.72	0.91	0.80	0.77				
ø50	25	1.30	1.71	1.64	1.44		0.044	0.046	0.008
	50	1.33	1.75	1.67	1.47				
ø63	25	1.83	2.45	2.33	1.97		0.052	0.054	0.009
	50	1.86	2.48	2.36	2.00				

(Example) Product weight of SCM-R-LB-40D-100-25-T2H-D
- Product weight when S = 0 mm..... 0.89 kg
- Additional weight when S = 100 mm ..... $0.032 \times \frac{100}{10}$ = 0.32 kg
- Weight of 2 switches..... 0.036 kg
- Product weight..... 0.89 kg + 0.32 kg + 0.036 kg = 1.246 kg

Theoretical thrust table

(Unit: N)

Bore size (mm)	Operating direction	Working pressure MPa: 0.05	0.1	0.15	0.2	0.3	0.4	0.5	0.6	0.7	0.8	0.9	1.0
ø20	Push	-	31.4	47.1	62.8	94.2	1.26×10^2	1.57×10^2	1.88×10^2	2.20×10^2	2.51×10^2	2.83×10^2	3.14×10^2
	Pull	-	26.4	39.6	52.8	79.2	1.06×10^2	1.32×10^2	1.58×10^2	1.85×10^2	2.11×10^2	2.38×10^2	2.64×10^2
ø25	Push	-	49.1	73.6	98.2	1.47×10^2	1.96×10^2	2.45×10^2	2.95×10^2	3.44×10^2	3.93×10^2	4.42×10^2	4.91×10^2
	Pull	-	41.2	61.9	82.5	1.24×10^2	1.65×10^2	2.06×10^2	2.47×10^2	2.89×10^2	3.30×10^2	3.71×10^2	4.12×10^2
ø32	Push	-	80.4	1.21×10^2	1.61×10^2	2.41×10^2	3.22×10^2	4.02×10^2	4.83×10^2	5.63×10^2	6.43×10^2	7.24×10^2	8.04×10^2
	Pull	-	69.1	1.04×10^2	1.38×10^2	2.07×10^2	2.76×10^2	3.46×10^2	4.15×10^2	4.84×10^2	5.53×10^2	6.22×10^2	6.91×10^2
ø40	Push	-	1.26×10^2	1.88×10^2	2.51×10^2	3.77×10^2	5.03×10^2	6.28×10^2	7.54×10^2	8.80×10^2	1.01×10^3	1.13×10^3	1.26×10^3
	Pull	-	1.06×10^2	1.58×10^2	2.11×10^2	3.17×10^2	4.22×10^2	5.28×10^2	6.33×10^2	7.39×10^2	8.44×10^2	9.50×10^2	1.06×10^3
ø50	Push	98.0	1.96×10^2	2.95×10^2	3.93×10^2	5.89×10^2	7.85×10^2	9.82×10^2	1.18×10^3	1.37×10^3	1.57×10^3	1.77×10^3	1.96×10^3
	Pull	82.5	1.65×10^2	2.47×10^2	3.30×10^2	4.95×10^2	6.60×10^2	8.25×10^2	9.90×10^2	1.15×10^3	1.32×10^3	1.48×10^3	1.65×10^3
ø63	Push	1.56×10^2	3.12×10^2	4.68×10^2	6.23×10^2	9.35×10^2	1.25×10^3	1.56×10^3	1.87×10^3	2.18×10^3	2.49×10^3	2.81×10^3	3.12×10^3
	Pull	2.40×10^2	2.80×10^2	4.20×10^2	5.61×10^2	8.41×10^2	1.12×10^3	1.40×10^3	1.68×10^3	1.96×10^3	2.24×10^3	2.52×10^3	2.80×10^3

SCP*3
CMK2
CMA2
SCM
SCG
SCA2
SCS2
CKV2
CAV2/COVP/N2
SSD2
SSG
SSD
CAT
MDC2
MVC
SMG
MSD/MSDG
FC*
STK
SRL3
SRG3
SRM3
SRT3
MRL2
MRG2
SM-25
ShkAbs
FJ
FK
Spd Contr
Ending

How to order

No switch (built-in magnet for switch)

SCM-R - LB - 40 ◯ D - 100 - 25 ——— J I

With switch (built-in magnet for switch)

SCM-R - LB - 40 ◯ D - 100 - 25 - T0H - D - ◯ J I

- Ⓐ Mounting *1
- Ⓑ Bore size
- Ⓒ Port thread
- Ⓓ Cushion
- Ⓔ Stroke
- Ⓕ Adjustable stroke range
- Ⓖ Switch model No. *3 *4
- Ⓗ Switch quantity
- Ⓘ Switch mounting
- Ⓙ Option *5 *7
- Ⓚ Accessory *8

Code	Description
Ⓐ Mounting	
00	Basic
LB	Axial foot
FA	Rod side flange
TA	Rod side trunnion
TB	Head side trunnion
Ⓑ Bore size (mm)	
20	ø20
25	ø25
32	ø32
40	ø40
50	ø50
63	ø63
Ⓒ Port thread	
Blank	Rc thread
N	NPT thread (made-to-order product)
G	G thread (made-to-order product)
Ⓓ Cushion	
D	With two-sided rubber cushion

Ⓔ Stroke (mm)

Bore size	Stroke *2	Custom stroke
ø20 to ø32	**10 to 1000**	**In 1 mm increments**
ø40 to ø63	**10 to 1500**	

Ⓕ Adjustable stroke range (mm)	
25	25
50	50

Ⓖ Switch model No.

Axial lead wire	Radial lead wire	Contact	Voltage AC	Voltage DC	Indicator	Lead wire
T0H*	**T0V***	Reed	●	●	1-color LED	2-wire
T5H*	**T5V***	Reed	●	●	No indicator lamp	2-wire
T8H*	**T8V***	Reed	●	●	1-color LED	2-wire
T1H*	**T1V***	Proximity	●		1-color LED	2-wire
T2H*	**T2V***	Proximity		●	1-color LED	2-wire
T3H*	**T3V***	Proximity		●	1-color LED	3-wire
T3PH*	**T3PV***	Proximity		●	1-color LED	3-wire
T2WH*	**T2WV***	Proximity		●	2-color LED	2-wire
T2YH*	**T2YV***	Proximity		●	2-color LED	2-wire
T3WH*	**T3WV***	Proximity		●	2-color LED	3-wire
T3YH*	**T3YV***	Proximity		●	2-color LED	3-wire
T2YD*	**-**	Proximity		●	2-color LED AC magnetic field	2-wire
T2YDT*	**-**	Proximity		●	2-color LED AC magnetic field	2-wire
T2JH*	**T2JV***	Proximity		●	1-color LED off-delay	2-wire

*** Lead wire length**	
Blank	1 m (standard)
3	3 m (option)
5	5 m (option)
Ⓗ Switch quantity	
R	1 on rod side
H	1 on head side
D	2
T	3
4	4 (when there are more than 4 switches, indicate switch quantity.)
Ⓘ Switch mounting	
Blank	Rail method
Z	Band method

Ⓙ Option

		Max. ambient temp.	Instantaneous max. temp.
J	Bellows	100°C	200°C
L	Bellows	250°C	400°C
Q	Switch rail included at shipment		
M	Piston rod material (stainless steel)		
P6	Copper and PTFE free		

Ⓚ Accessory	
I	Rod eye
Y	Rod clevis (pin and snap ring included)
B2	Clevis bracket

⚠ Precautions for model No. selection

*1 : A mounting bracket will be shipped with the product if LB, FB or TB is selected. FA/TA is shipped with the product.
*2 : Refer to page 272 for the number of installed switches and the min. stroke.
*3 : Switches other than Ⓖ Switch model No. are also available. (Made to order) Refer to Ending Page 1 for details.
*4 : T8H/V switches cannot be mounted when the bore size is from ø20 to ø40 and the switch mounting style is the rail.
*5 : The instantaneous max. temperature is the temperature when sparks, cutting chips, etc., instantaneously contact the bellows.
*6 : Refer to Ending Page 85 for custom specifications of rod end form.
*7 : "Q" (switch rail enclosed at shipment) is not available for the "Z" switch mounting.
*8 : "I" and "Y" cannot be selected together.
*9 : Switches are shipped with the product. Contact CKD if assembling before shipment is necessary.

[Example of model No.]

SCM-R-LB-40D-100-25-T0H-D-JI

Model: Round shaped cylinder, double acting/stroke adjustable (pull)

Ⓐ Mounting	: Axial foot
Ⓑ Bore size	: ø40 mm
Ⓒ Port thread	: Rc thread
Ⓓ Cushion	: With two-sided rubber cushion
Ⓔ Stroke	:100 mm
Ⓕ Adjustable stroke range	: 25 mm
Ⓖ Switch model No.	: Reed T0H switch, lead wire 1 m
Ⓗ Switch quantity	: 2
Ⓘ Switch mounting	: Rail method
Ⓙ Option	: Bellows material for max. ambient temperature 100°C
Ⓚ Accessory	: Rod eye

How to order switch

[Switch mounting: Rail]

● Switch body + mounting rail set

SCM - T0H - D - 40 - 100

- T0H: Switch model No. (Item Ⓖ on page 274)
- D: Switch quantity (Item Ⓗ on page 274)
- 40: Bore size (Item Ⓑ on page 274)
- 100: Stroke (Item Ⓔ on page 274) (*1)

● Mounting rail only

SCM - T - 40 - 100

- T: Mounting rail
- 40: Bore size (Item Ⓑ on page 274)
- 100: Stroke (Item Ⓔ on page 274) (*1) (*2)

*1: Indicate X if the stroke exceeds 300 mm.
If exceeding 300 mm, a short rail (with 100 mm switch adjustment length) will be included per switch.
*2: If indicating X when ordering mounting rails only, order the same number of rails as that of applicable switches.

[Switch mounting: Band]

● Switch body + mounting bracket set + band

SCM - T2H* - 40 - Z

- T2H*: Switch model No. (Item Ⓖ on page 274)
- 40: Bore size (Item Ⓑ on page 274)

● Mounting bracket set + band

SCM - Z - 40

- 40: Bore size (Item Ⓑ on page 274)

[Switch body only]

SW - T0H

- T0H: Switch model No. (Item Ⓖ on page 274)

How to order mounting bracket

Bore size (mm) / Mounting bracket	ø20	ø25	ø32	ø40	ø50	ø63
Foot (LB)	SCM-LB-20	SCM-LB-25	SCM-LB-32	SCM-LB-40	SCM-LB-50	SCM-LB-63
Flange (FA/FB)	SCM-FA-20	SCM-FA-25	SCM-FA-32	SCM-FA-40	SCM-FA-50	SCM-FA-63
Trunnion (TA/TB)	SCM-TA-20	SCM-TA-25	SCM-TA-32	SCM-TA-40	SCM-TA-50	SCM-TA-63

*1: All mounting brackets are supplied with mounting bolts.
*2: The foot mounting bracket is provided as 2 pcs./set.

SCP*3
CMK2
CMA2
SCM
SCG
SCA2
SCS2
CKV2
CAV2/COVP/N2
SSD2
SSG
SSD
CAT
MDC2
MVC
SMG
MSD/MSDG
FC*
STK
SRL3
SRG3
SRM3
SRT3
MRL2
MRG2
SM-25
ShkAbs
FJ
FK
Spd Contr
Ending

Internal structure and parts list

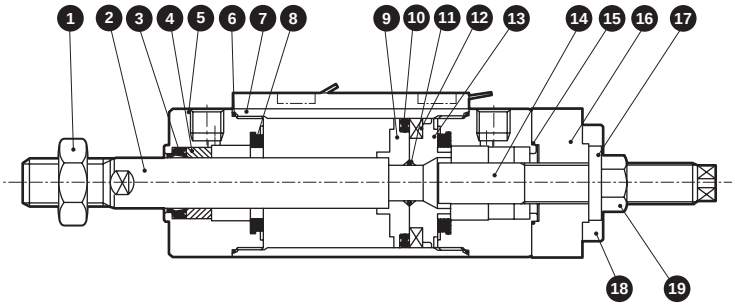

No.	Part name	Material	Remarks	No.	Part name	Material	Remarks
1	Rod nut	Steel	Nickeling	10	Piston packing	Nitrile rubber	
2	Piston rod	Steel	Industrial chrome plating	11	Piston gasket	Nitrile rubber	
3	Rod packing	Nitrile rubber		12	Magnet	Plastic	
4	Bush	Oil impregnated bearing alloy *1		13	Piston H	ø20 to ø40: Aluminum alloy ø50, ø63: Aluminum alloy die-casting	
5	Rod cover	Aluminum alloy	Hard alumite	14	Bolt	Steel	Zinc chromate
6	Cylinder gasket	Nitrile rubber		15	Gasket	Nitrile rubber	
7	Cylinder tube	Aluminum alloy	Hard alumite	16	Cover	Steel	Zinc chromate
8	Cushion rubber	Urethane rubber		17	Die thread	Steel + nitrile rubber	
9	Piston R	ø20 to ø40: Aluminum alloy ø50, ø63: Aluminum alloy die-casting		18	Hex socket screw	Alloy steel	Black finish
				19	Hexagon nut	Steel	Nickeling

*1: Oil-impregnated cast iron bearing for copper and PTFE free.

Repair parts list

Bore size (mm)	Kit No.	Repair parts No.
ø20	SCM-R-20DK	3 6 10 15 17
ø25	SCM-R-25DK	
ø32	SCM-R-32DK	
ø40	SCM-R-40DK	
ø50	SCM-R-50DK	
ø63	SCM-R-63DK	

*1: Specify the kit No. when placing an order.

dimensions

● Double acting/adjustable stroke (pull)

• Switch mounting: Rail

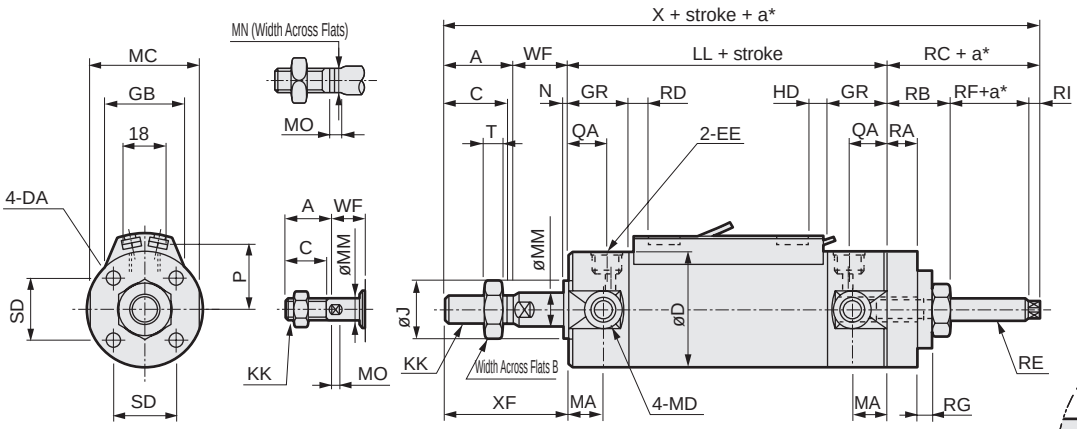

ø20/ø25

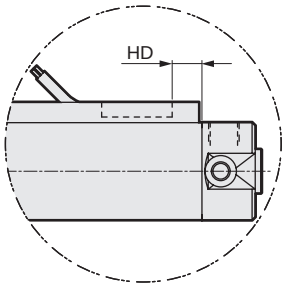

In the case of T2W, T3W

• Switch mounting: Band

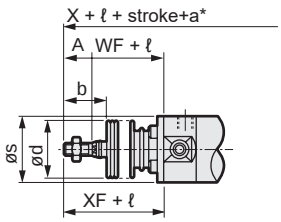

With bellows

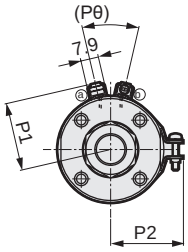

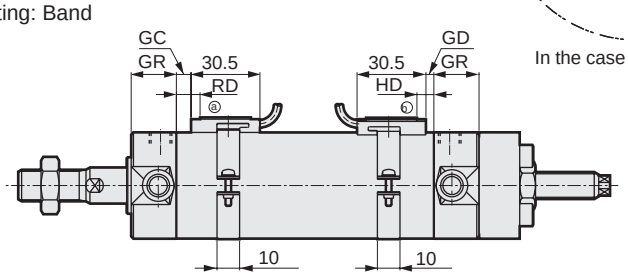

* a indicates adjustable stroke

***1: Refer to page 345 for RD, HD and protruding dimensions of the 2-color LED, off-delay, AC magnetic field proof, T1H/V and T8H/V switches.**

Code / Bore size (mm)	Basic (00) Basic dimensions																				
	A	B	C	D	DA	EE	GR	J	KK	LL	MA	MC	MD	MM	MN	MO	N	QA	SD	T	WF	X
ø20	18	13	16	26	M4 depth 6.5	Rc1/8	19	12	M8	71	11	24	M5	8	6	4	2	12	14	5	17	128.5
ø25	22	17	20	31	M5 depth 6.5	Rc1/8	19	14	M 10 x 1.25	71	11	29	M6	10	8	5	2	12	16.5	6	18	141
ø32	22	17	20	38	M5 depth 7.5	Rc1/8	19	18	M 10 x 1.25	73	11	36	M8	12	10	5.5	2	12	20	6	18	140
ø40	30	22	27	47	M6 depth 12	Rc1/8	20	25	M 14 x 1.5	79	12	44	M10	16	14	6	2	13	26	8	20	169
ø50	35	27	32	58	M8 depth 16	Rc1/4	25	30	M 18 x 1.5	93	13	55	M12	20	17	8	2	15	32	11	23	198
ø63	35	27	32	72	M10 depth 16	Rc1/4	25	32	M 18 x 1.5	93	13	69	M14	20	17	8	2	15	38	11	23	198

Code / Bore size (mm)									With bellows				Switch mounting: Rail							
	XF	RA	RB	RC	RE	RI	RF	RG	b	d	s	ℓ	P	GB	HD			RD		
															T0/T5	T2/T2R T3/T3P	T2W T3W	T0/T5	T2/T2R T3/T3P	T2W T3W
ø20	35	8	16	22.5	M6	4	2.5	4	30	30	25.7	(stroke/3) + 18.5	19.5	23	3.0	6.5	8.5	7.5	7.5	9.5
ø25	40	10	20	30	M8	4	6	5	35	30	30.7	(stroke/3) + 20.5	22	24.4	2.0	5.5	7.5	8.5	8.5	10.5
ø32	40	10	20	27	M8	4	3	5	31.5	35	37.7	(stroke/3) + 19	25.5	25	3.0	6.5	8.5	9.5	9.5	11.5
ø40	50	18	32	40	M 12 x 1.5	5	3	6	40	35	46.7	(stroke/3) + 18.5	30	25.7	5.0	8.5	10.5	11.5	11.5	13.5
ø50	58	20	37	47	M 16 x 1.5	7	3	8	46	40	57.7	(stroke/3.6) + 18.5	35.5	26.2	7.5	11.0	13.0	13.0	13.0	15.0
ø63	58	20	37	47	M 16 x 1.5	7	3	10	46	40	71.7	(stroke/3.6) + 18.5	42.5	26.5	7.5	11.0	13.0	13.0	13.0	15.0

Code / Bore size (mm)	Switch mounting: Band															
	GC			GD			HD			RD			P1	P2	P3	Pθ
	T0/T5	T2,T3	T2W T3W	T0/T5	T2,T3	T2W T3W	T0/T5	T2,T3	T2W T3W	T0/T5	T2,T3	T2W T3W				
ø20	3.5	3.5	5.5	2.5	2.5	4.5	6.5	6.5	8.5	7.5	7.5	9.5	19.6	21.5	14	(38°)
ø25	4.5	4.5	6.5	1.5	1.5	3.5	5.5	5.5	7.5	8.5	8.5	10.5	22.1	23.9	14	(34°)
ø32	5.5	5.5	7.5	2.5	2.5	4.5	6.5	6.5	8.5	9.5	9.5	11.5	25.6	27.6	16	(30°)
ø40	7.5	7.5	9.5	4.5	4.5	6.5	8.5	8.5	10.5	11.5	11.5	13.5	30.2	32.1	16	(26°)
ø50	9.0	9.0	11.0	7.0	7.0	9.0	11.0	11.0	13.0	13.0	13.0	15.0	35.7	37.4	16	(22°)
ø63	9.0	9.0	11.0	7.0	7.0	9.0	11.0	11.0	13.0	13.0	13.0	15.0	42.7	44.4	16	(20°)

* Installation dimensions of the mounting are the same as those of SCM (double acting). Refer to pages 240 to 251.
* For the dimensions of the accessories, refer to pages 252 and 253.

Round shaped cylinder Double acting/heat resistant

SCM-T Series

● Bore size: ø20/ø25/ø32/ø40
ø50/ø63/ø80/ø100

JIS symbol

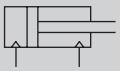

RoHS CAD

Specifications

Item		SCM-T							
Bore size	mm	ø20	ø25	ø32	ø40	ø50	ø63	ø80	ø100
Actuation		Double acting/heat resistant							
Working fluid		Compressed air							
Max. working pressure	MPa	1.0 (≈150 psi, 10 bar)							
Min. working pressure	MPa	0.1 (≈15 psi, 1 bar)				0.05 (≈7.3 psi, 0.5 bar)			
Proof pressure	MPa	1.6 (≈230 psi, 16 bar)							
Ambient temperature	°C	5 (41°F) to 120 (248°F)							
Port size		Rc1/8				Rc1/4		Rc3/8	Rc1/2
Stroke tolerance	mm	$^{+1.8}_{0}$ (to 1000)			$^{+1.8}_{0}$ (to 1500)	$^{+1.4}_{0}$ (to 1000), $^{+1.8}_{0}$ (to 1500)			
Working piston speed	mm/s	30 to 1000 (Operate within the allowable absorbed energy.)							
Cushion		Rubber cushion				Air cushion			
Lubrication	*1	Not available							
Allowable	With rubber cushion	0.1	0.2	0.5	0.9	—	—	—	—
absorbed	With air cushion	—	—	—	—	8.0	14.4	25.4	45.6
energy J	Without cushion	—	—	—	—	0.057	0.057	0.112	0.153

*1 : Periodically apply additional heat-resistant grease.
*2: For absorbed energy of the type without cushion, refer to Ending Page 68.
*3 : The values of allowable absorbed energy for “No cushion” are the allowable absorbed energy on the non-specified side when an air cushion is selected for the other side (“R”→ Head side, “H”→ Rod side).
*4 : Without any cushion, this product cannot absorb large energy generated by an external load. Provide a shock absorber on the outside.

Stroke

Bore size (mm)	Standard stroke (mm)	Max. stroke (mm)	Min. stroke (mm)
ø20	25, 50, 75 100, 125, 150 200, 250, 300	1000	10
ø25			
ø32			
ø40		1500	
ø50			
ø63			
ø80			
ø100			

*1: The custom stroke is available in 1 mm increments.

Cylinder weight

(Unit: kg)

Item/mounting / Bore size	Product weight when stroke (S) = 0 mm					Additional weight per S = 10 mm
	Basic	Axial foot	Flange	Clevis	Trunnion	
ø20	0.10	0.21	0.13	0.15	0.11	0.010
ø25	0.17	0.30	0.21	0.25	0.19	0.014
ø32	0.25	0.41	0.31	0.40	0.28	0.018
ø40	0.40	0.62	0.48	0.63	0.45	0.030
ø50	0.75	1.23	1.09	1.15	0.89	0.044
ø63	1.05	1.77	1.55	1.73	1.19	0.052
ø80	2.02	2.98	2.73	2.73	-	0.070
ø100	3.14	4.89	4.49	4.42	-	0.098

(Example) Product weight of SCM-T-LB-40-100
- Product weight when S = 0 mm..... 0.62 kg
- Additional weight when S = 100 mm ..... 0.030x $\frac{100}{10}$=0.30 kg
- Product weight..... 0.62 kg + 0.30 kg =0.92 kg

Theoretical thrust table

(Unit: N)

Bore size (mm)	Operating direction	Working pressure MPa											
		0.05	0.1	0.15	0.2	0.3	0.4	0.5	0.6	0.7	0.8	0.9	1.0
ø20	Push	–	31.4	47.1	62.8	94.2	$1.26x10^2$	$1.57x10^2$	$1.88x10^2$	$2.20x10^2$	$2.51x10^2$	$2.83x10^2$	$3.14x10^2$
	Pull	–	26.4	39.6	52.8	79.2	$1.06x10^2$	$1.32x10^2$	$1.58x10^2$	$1.85x10^2$	$2.11x10^2$	$2.38x10^2$	$2.64x10^2$
ø25	Push	–	49.1	73.6	98.2	$1.47x10^2$	$1.96x10^2$	$2.45x10^2$	$2.95x10^2$	$3.44x10^2$	$3.93x10^2$	$4.42x10^2$	$4.91x10^2$
	Pull	–	41.2	61.9	82.5	$1.24x10^2$	$1.65x10^2$	$2.06x10^2$	$2.47x10^2$	$2.89x10^2$	$3.30x10^2$	$3.71x10^2$	$4.12x10^2$
ø32	Push	–	80.4	$1.21x10^2$	$1.61x10^2$	$2.41x10^2$	$3.22x10^2$	$4.02x10^2$	$4.83x10^2$	$5.63x10^2$	$6.43x10^2$	$7.24x10^2$	$8.04x10^2$
	Pull	–	69.1	$1.04x10^2$	$1.38x10^2$	$2.07x10^2$	$2.76x10^2$	$3.46x10^2$	$4.15x10^2$	$4.84x10^2$	$5.53x10^2$	$6.22x10^2$	$6.91x10^2$
ø40	Push	–	$1.26x10^2$	$1.88x10^2$	$2.51x10^2$	$3.77x10^2$	$5.03x10^2$	$6.28x10^2$	$7.54x10^2$	$8.80x10^2$	$1.01x10^3$	$1.13x10^3$	$1.26x10^3$
	Pull	–	$1.06x10^2$	$1.58x10^2$	$2.11x10^2$	$3.17x10^2$	$4.22x10^2$	$5.28x10^2$	$6.33x10^2$	$7.39x10^2$	$8.44x10^2$	$9.50x10^2$	$1.06x10^3$
ø50	Push	98.0	$1.96x10^2$	$2.95x10^2$	$3.93x10^2$	$5.89x10^2$	$7.85x10^2$	$9.82x10^2$	$1.18x10^3$	$1.37x10^3$	$1.57x10^3$	$1.77x10^3$	$1.96x10^3$
	Pull	82.5	$1.65x10^2$	$2.47x10^2$	$3.30x10^2$	$4.95x10^2$	$6.60x10^2$	$8.25x10^2$	$9.90x10^2$	$1.15x10^3$	$1.32x10^3$	$1.48x10^3$	$1.65x10^3$
ø63	Push	$1.56x10^2$	$3.12x10^2$	$4.68x10^2$	$6.23x10^2$	$9.35x10^2$	$1.25x10^3$	$1.56x10^3$	$1.87x10^3$	$2.18x10^3$	$2.49x10^3$	$2.81x10^3$	$3.12x10^3$
	Pull	$2.40x10^2$	$2.80x10^2$	$4.20x10^2$	$5.61x10^2$	$8.41x10^2$	$1.12x10^3$	$1.40x10^3$	$1.68x10^3$	$1.96x10^3$	$2.24x10^3$	$2.52x10^3$	$2.80x10^3$
ø80	Push	$2.51x10^2$	$5.03x10^2$	$7.54x10^2$	$1.01x10^3$	$1.51x10^3$	$2.01x10^3$	$2.51x10^3$	$3.02x10^3$	$3.52x10^3$	$4.02x10^3$	$4.52x10^3$	$5.03x10^3$
	Pull	$2.27x10^2$	$4.54x10^2$	$6.80x10^2$	$9.07x10^2$	$1.36x10^3$	$1.81x10^3$	$2.27x10^3$	$2.72x10^3$	$3.17x10^3$	$3.63x10^3$	$4.08x10^3$	$4.54x10^3$
ø100	Push	$3.92x10^2$	$7.85x10^2$	$1.18x10^3$	$1.57x10^3$	$2.36x10^3$	$3.14x10^3$	$3.93x10^3$	$4.71x10^3$	$5.50x10^3$	$6.28x10^3$	$7.07x10^3$	$7.85x10^3$
	Pull	$3.57x10^2$	$7.15x10^2$	$1.07x10^3$	$1.43x10^3$	$2.14x10^3$	$2.86x10^3$	$3.57x10^3$	$4.29x10^3$	$5.00x10^3$	$5.72x10^3$	$6.43x10^3$	$7.15x10^3$

Dimensions

The same dimensions as those of the standard single rod. Refer to pages 238 to 251.

How to order

No switch

SCM-T - LB - 40 ◯ D - 100 - L I

- Ⓐ Mounting *1
- Ⓑ Bore size
- Ⓒ Port thread
- Ⓓ Cushion *2
- Ⓔ Stroke
- Ⓕ Option
- Ⓖ Accessory *3, *4

Code	Description								
Ⓐ Mounting									
Bore size (ø)		20	25	32	40	50	63	80	100
00	Basic	●	●	●	●	●	●	●	●
LB	Axial foot	●	●	●	●	●	●	●	●
FA	Rod side flange	●	●	●	●	●	●	●	●
FB	Head side flange	●	●	●	●	●	●	●	●
CA	Eye bracket	●	●	●	●	●	●		
CB	Clevis bracket (pin and snap ring included)							●	●
TA	Rod side trunnion	●	●	●	●	●	●		
TB	Head side trunnion	●	●	●	●	●	●		

Ⓑ Bore size (mm)	
20	ø20
25	ø25
32	ø32
40	ø40
50	ø50
63	ø63
80	ø80
100	ø100

Ⓒ Port thread	
Blank	Rc thread
N	NPT thread (made-to-order product) With air cushion: ø32 and over
G	G thread (made-to-order product) With air cushion: ø32 and over

Ⓓ Cushion									
Bore size (ø)		20	25	32	40	50	63	80	100
B	With two-sided air cushion					●	●	●	●
R	Rod side air cushioned					●	●	●	●
H	Head side air cushioned					●	●	●	●
D	With two-sided rubber cushion	●	●	●	●				

Ⓔ Stroke (mm)		
Bore size	**Stroke**	**Custom stroke**
ø20 to ø32	**10 to 1000**	**In 1 mm increments**
ø40 to ø100	**10 to 1500**	

Ⓕ Option			
		Max. ambient temp.	Instantaneous max. temp.
L	Bellows material: Silicone rubber glass cloth	250°C	400°C
M	Piston rod material (stainless steel)		

Ⓖ Accessory									
Bore size (ø)		20	25	32	40	50	63	80	100
I	Rod eye	●	●	●	●	●	●	●	●
Y	Rod clevis (pin and snap ring included)	●	●	●	●	●	●	●	●
B1	Eye bracket							●	●
B2	Clevis bracket	●	●	●	●	●	●		

⚠ Precautions for model No. selection

*1 : Mounting bracket will be shipped with the product.
*2 : B/R/H are not available for ø20 to ø40.
Only D is available.
D is not available for ø50 to ø100.
Only B/R/H are available.
*3 : Refer to Ending Page 85 for custom specifications of rod end form.
*4 : "I" and "Y" cannot be selected together.

[Example of model No.]

SCM-T-LB-40D-100-LI

Model: Round shaped cylinder, double acting/heat resistant

- Ⓐ Mounting : Axial foot
- Ⓑ Bore size : ø40 mm
- Ⓒ Port thread : Rc thread
- Ⓓ Cushion : With two-sided rubber cushion
- Ⓔ Stroke :100 mm
- Ⓕ Option : Bellows material for max. ambient temperature 250°C
- Ⓖ Accessory : Rod eye

How to order mounting bracket

Bore size (mm) / Mounting bracket	ø20	ø25	ø32	ø40	ø50	ø63	ø80	ø100
Foot (LB)	SCM-LB-20	SCM-LB-25	SCM-LB-32	SCM-LB-40	SCM-LB-50	SCM-LB-63	SCM-LB-80	SCM-LB-100
Flange (FA/FB)	SCM-FA-20	SCM-FA-25	SCM-FA-32	SCM-FA-40	SCM-FA-50	SCM-FA-63	SCM-FA-80	SCM-FA-100
Eye bracket (CA)	SCM-CA-20	SCM-CA-25	SCM-CA-32	SCM-CA-40	SCM-CA-50	SCM-CA-63	-	-
Clevis bracket (CB)	-	-	-	-	-	-	SCM-CB-80	SCM-CB-100
Trunnion (TA/TB)	SCM-TA-20	SCM-TA-25	SCM-TA-32	SCM-TA-40	SCM-TA-50	SCM-TA-63	-	-

*1: All mounting brackets are supplied with mounting bolts.
*2: The foot mounting bracket is provided as 2 pcs./set.

Internal structure and parts list

● ø20 to ø40 (with rubber cushion)

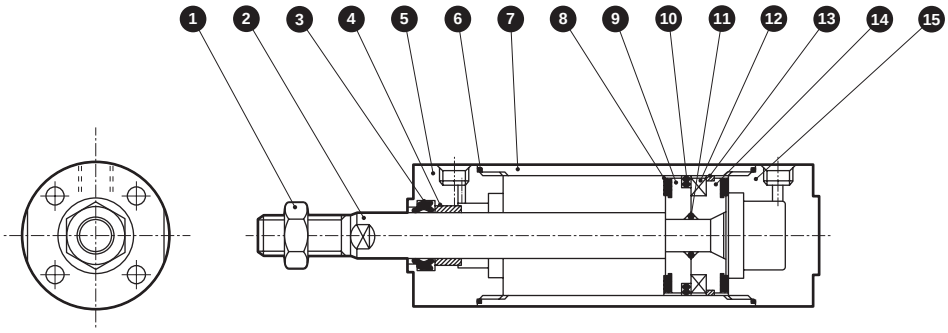

● ø50 to ø100 (with air cushion)

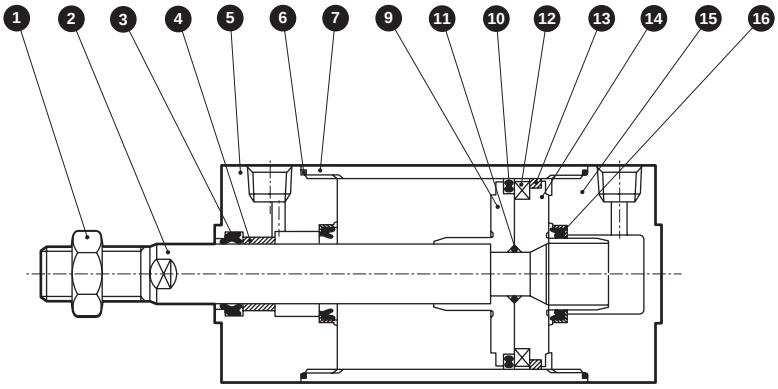

No.	Part name	Material	Remarks	No.	Part name	Material	Remarks
1	Rod nut	Steel	Nickeling	10	Piston packing	Fluoro rubber	
2	Piston rod	ø20, ø25: Stainless steel ø32 to ø100: Steel	Industrial chrome plating	11	Piston gasket	Fluoro rubber	
3	Rod packing	Fluoro rubber		12	Piston ring	ø20 to ø32: Aluminum alloy ø40 to ø100: Steel	ø40 to ø100: Zinc chromate
4	Bush	Oil impregnated bearing alloy		13	Wear ring	Special resin	
5	Rod cover	Aluminum alloy	Hard alumite	14	Piston H	ø20 to ø40: Aluminum alloy ø50 to ø100: Aluminum alloy die-casting	
6	Cylinder gasket	Fluoro rubber					
7	Cylinder tube	Aluminum alloy	Hard alumite	15	Head cover	Aluminum alloy	Hard alumite
8	Cushion rubber	Fluoro rubber		16	Cushion packing	Fluoro rubber/steel	
9	Piston R	ø20 to ø40: Aluminum alloy ø50 to ø100: Aluminum alloy die-casting					

Repair parts list

Bore size (mm)	Kit No.	Repair parts No.
ø20	SCM-T-20K	3 6 8 10 13
ø25	SCM-T-25K	
ø32	SCM-T-32K	
ø40	SCM-T-40K	
ø50	SCM-T-50K	3 6 10 13 16
ø63	SCM-T-63K	
ø80	SCM-T-80K	
ø100	SCM-T-100K	

*1: Specify the kit No. when placing an order.

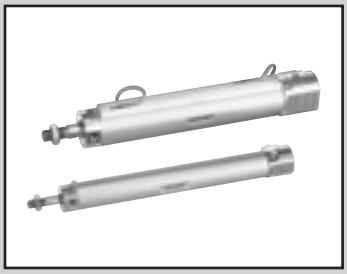

Round shaped cylinder Double acting/position locking

SCM-Q Series

● Bore size: ø20/ø25/ø32/ø40
ø50/ø63/ø80/ø100

JIS symbol

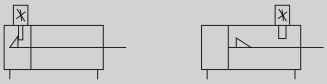

RoHS CAD

Specifications

Item		SCM-Q							
Bore size	mm	ø20	ø25	ø32	ø40	ø50	ø63	ø80	ø100
Actuation		Double acting/position locking							
Working fluid		Compressed air							
Max. working pressure	MPa	1.0 (≈150 psi, 10 bar)							
Min. working pressure	MPa	0.15 (≈22 psi, 1.5 bar)				0.1 (≈15 psi, 1 bar)			
Proof pressure	MPa	1.6 (≈230 psi, 16 bar)							
Ambient temperature	°C	-10 (14°F) to 60 (140°F) (no freezing)							
Port size		M5		Rc1/8		Rc1/4		Rc3/8	Rc1/2
Stroke tolerance	mm	$^{+1.4}_{0}$ (to 1000)			$^{+1.4}_{0}$ (to 1500)	$^{+1.4}_{0}$ (to 1000), $^{+1.8}_{0}$ (to 1500)			
Working piston speed	mm/s	30 to 500 (Operate within the allowable absorbed energy.)							
Cushion		Air cushion							
Effective air cushion length	mm	8.1	8.1	8.6	8.6	13.4	13.4	15.4	15.4
Lubrication		Not required (use turbine oil ISO VG32 if necessary for lubrication)							
Position locking mechanism		Head side or rod side							
Holding force	N	Max. thrust x 0.7							
Allowable absorbed energy J	Cushioned	0.8	1.2	2.5	3.7	8.0	14.4	25.4	45.6
	Without cushion	-	-	-	-	0.057	0.057	0.112	0.153

*1: The values of allowable absorbed energy for "No cushion" are the allowable absorbed energy on the non-specified side when an air cushion is selected for the other side ("R" → Head side, "H" → Rod side).
*2: Without any cushion, this product cannot absorb large energy generated by an external load.
Provide a shock absorber on the outside.

Stroke

Bore size (mm)	Standard stroke (mm)	Max. stroke (mm)	Min. stroke (mm)
ø20	25/50/75/ 100/125/150/ 200/250/300	1000	10
ø25			
ø32			
ø40		1500	
ø50			
ø63			
ø80			
ø100			

*1: The custom stroke is available in 1 mm increments.

Number of installed switches and min. stroke (mm)

● Switch mounting method: Rail

Switch quantity	1				2				3				4				5			
Bore size (mm)	Proximity			Reed	Proximity			Reed	Proximity			Reed	Proximity			Reed	Proximity			Reed
	T2, T3	T2W, T3W	T*Y*		T2, T3	T2W, T3W	T*Y*		T2, T3	T2W, T3W	T*Y*		T2, T3	T2W, T3W	T*Y*		T2, T3	T2W, T3W	T*Y*	
ø20	10				25				50	70	70	55	55	70	70	55	75	110	110	90
ø25	10				25				50	70	70	55	55	70	70	55	75	110	110	90
ø32	10				25				50	70	70	55	55	70	70	55	75	110	110	90
ø40	10				25				50	70	70	55	55	70	70	55	75	110	110	90
ø50	10				25				50	65	65	55	55	65	65	55	75	110	110	90
ø63	10				25				50	65	65	55	55	65	65	55	75	110	110	90
ø80	10				25				50	65	65	55	55	65	65	55	75	110	110	90
ø100	10				25				50	65	65	55	55	65	65	55	75	110	110	90

● Switch mounting: Band

Switch quantity	1				2				3				4				5			
Bore size (mm)	Proximity			Reed	Proximity			Reed	Proximity			Reed	Proximity			Reed	Proximity			Reed
	T2, T3	T2W, T3W	T*Y*		T2, T3	T2W, T3W	T*Y*		T2, T3	T2W, T3W	T*Y*		T2, T3	T2W, T3W	T*Y*		T2, T3	T2W, T3W	T*Y*	
ø20	10				25	30	35	25	50	55	55	50	75	75	80	70	95	100	100	95
ø25	10				25	30	35	25	50	55	55	50	75	75	80	70	95	100	100	95
ø32	10				25	30	35	25	50	55	55	50	75	75	80	70	95	100	100	95
ø40	10				25	30	35	25	50	55	55	50	75	75	80	70	95	100	100	95
ø50	10				25	30	35	25	50	55	55	50	75	75	80	70	95	100	100	95
ø63	10				25	30	35	25	50	55	55	50	75	75	80	70	95	100	100	95
ø83	10				25	30	35	25	50	55	55	50	75	75	80	70	95	100	100	95
ø100	10				25	30	35	25	50	55	55	50	75	75	80	70	95	100	100	95

*1: For types with one switch, when the stroke is between 10 and 24 mm, the trunnion mounting is not available since the switch rail mounting position is different. Refer to page 345 for mounting position.

Switch specifications

● 1-color/2-color LED

Item	2-wire proximity	2-wire proximity			3-wire proximity				2-wire reed							2-wire proximity
	T1H/T1V	T2H/T2V/ T2JH/T2JV	T2YH/ T2YV	T2WH/ T2WV	T3H/ T3V	T3PH/ T3PV	T3YH/ T3YV	T3WH/ T3WV	T0H/T0V		T5H/T5V		T8H/T8V			T2YD (*4) T2YDT
Applications	For programming controller, relay, compact solenoid valve	Dedicated for programmable controller			For programmable controller, relay				For programmable controller, relay		For programmable controller, relay (no lamp), serial		For programmable controller, relay			For programmable controller
Output method	-				NPN output	PNP output	NPN output	NPN output	-							
Pwr. supp. V.	-				10 to 28 VDC				-							
Load voltage	85 to 265 VAC	10 to 30 VDC		24 VDC ±10%	30 VDC or less				12/24 VDC	100/110 VAC	5/12/24 VDC	100/110 VAC	12/24 VDC	110 VAC	220 VAC	24 VDC ±10%
Load current	5 to 100 mA	5 to 20 mA (*3)			100 mA or less		50 mA or less		5 to 50 mA	7 to 20 mA	50 mA or less	20 mA or less	5 to 50 mA	7 to 20 mA	7 to 10 mA	5 to 20 mA
Indicator	LED (Lit when ON)	LED (Lit when ON)	Red/green LED (Lit when ON)	Red/green LED (Lit when ON)	LED (Lit when ON)	Yellow LED (Lit when ON)	Red/green LED (Lit when ON)	Red/green LED (Lit when ON)	LED (Lit when ON)		No indicator lamp		LED (Lit when ON)			Red/green LED (Lit when ON)
Leakage current	≤ 1 mA at 100 VAC, ≤ 2 mA at 200 VAC	1 mA or less			10 μA or less				0 mA							1 mA or less
Weight g	1 m:33 3 m:87 5 m:142	1 m:18 3 m:49 5 m:80	1 m:33 3 m:87 5 m:142	1 m:18 3 m:49 5 m:80	1 m:18 3 m:49 5 m:80		1 m:33 3 m:87 5 m:142	1 m:18 3 m:49 5 m:80	1 m:18 3 m:49 5 m:80				1 m:33 3 m:87 5 m:142			1 m:61 3 m:166 5 m:272

*1: Refer to Ending Page 1 for detailed switch specifications and dimensions.
*2: Switches other than the above models, such as switches with connectors, are also available. Refer to Ending Page 1.
*3: Max. load current: 20 mA at 25°C. The current is lower than 20 mA if the operating ambient temperature around the switch is higher than 25°C. (5 to 10 mA at 60°C)
*4: Switch for AC magnetic field (T2YD/T2YDT) cannot be used in DC magnetic field.

Cylinder weight

● With rod side position locking (R)

(Unit: kg)

Item/mounting / Bore size (mm)	Product weight when stroke (S) = 0 mm					Switch weight (per 1 pc)	Additional weight per S = 10 mm	Additional weight per S = 10 mm (with rail)	Band weight per switch
	Basic	Axial foot	Flange	Clevis	Trunnion				
ø20	0.15	0.26	0.18	0.20	0.16	Refer to the weight in the switch specifications.	0.010	0.012	0.007
ø25	0.24	0.37	0.28	0.32	0.26		0.014	0.016	0.007
ø32	0.32	0.48	0.38	0.47	0.35		0.018	0.020	0.007
ø40	0.64	0.86	0.72	0.87	0.69		0.030	0.032	0.007
ø50	1.09	1.57	1.43	1.49	1.23		0.044	0.046	0.008
ø63	1.49	2.21	1.99	2.17	1.63		0.052	0.054	0.009
ø80	2.67	3.63	3.38	3.38	-		0.070	0.072	0.010
ø100	4.15	5.90	5.50	5.43	-		0.098	0.100	0.010

● With head side position locking (H)

(Unit: kg)

Item/mounting / Bore size (mm)	Product weight when stroke (S) = 0 mm					Switch weight (per 1 pc)	Additional weight per S = 10 mm	Additional weight per S = 10 mm (with rail)	Band weight per switch
	Basic	Axial foot	Flange	Clevis	Trunnion				
ø20	0.15	0.26	0.18	0.20	0.16	Refer to the weight in the switch specifications.	0.010	0.012	0.007
ø25	0.24	0.37	0.28	0.32	0.26		0.014	0.016	0.007
ø32	0.35	0.51	0.41	0.50	0.38		0.018	0.020	0.007
ø40	0.69	0.91	0.77	0.92	0.74		0.030	0.032	0.007
ø50	1.19	1.67	1.53	1.59	1.33		0.044	0.046	0.008
ø63	1.60	2.32	2.10	2.28	1.74		0.052	0.054	0.009
ø80	2.86	3.82	3.57	3.57	-		0.070	0.072	0.010
ø100	4.30	6.05	5.65	5.58	-		0.098	0.100	0.010

(Example) Product weight of SCM-Q-LB-40B-100-R-T2H-D
- Product weight when S = 0 mm..... 0.86 kg
- Additional weight when S = 100 mm ..... 0.032x $\frac{100}{10}$=0.32 kg
- Weight of 2 switches..... 0.036 kg
- Product weight..... 0.86 kg + 0.32 kg + 0.036 kg=1.216 kg

Theoretical thrust table

(Unit: N)

Bore size (mm)	Operating direction	Working pressure MPa										
		0.1	0.15	0.2	0.3	0.4	0.5	0.6	0.7	0.8	0.9	1.0
ø20	Push	-	47.1	62.8	94.2	1.26×10^2	1.57×10^2	1.88×10^2	2.20×10^2	2.51×10^2	2.83×10^2	3.14×10^2
	Pull	-	39.6	52.8	79.2	1.06×10^2	1.32×10^2	1.58×10^2	1.85×10^2	2.11×10^2	2.38×10^2	2.64×10^2
ø25	Push	-	73.6	98.2	1.47×10^2	1.96×10^2	2.45×10^2	2.95×10^2	3.44×10^2	3.93×10^2	4.42×10^2	4.91×10^2
	Pull	-	61.9	82.5	1.24×10^2	1.65×10^2	2.06×10^2	2.47×10^2	2.89×10^2	3.30×10^2	3.71×10^2	4.12×10^2
ø32	Push	-	1.21×10^2	1.61×10^2	2.41×10^2	3.22×10^2	4.02×10^2	4.83×10^2	5.63×10^2	6.43×10^2	7.24×10^2	8.04×10^2
	Pull	-	1.04×10^2	1.38×10^2	2.07×10^2	2.76×10^2	3.46×10^2	4.15×10^2	4.84×10^2	5.53×10^2	6.22×10^2	6.91×10^2
ø40	Push	-	1.88×10^2	2.51×10^2	3.77×10^2	5.03×10^2	6.28×10^2	7.54×10^2	8.80×10^2	1.01×10^3	1.13×10^3	1.26×10^3
	Pull	-	1.58×10^2	2.11×10^2	3.17×10^2	4.22×10^2	5.28×10^2	6.33×10^2	7.39×10^2	8.44×10^2	9.50×10^2	1.06×10^3
ø50	Push	1.96×10^2	2.95×10^2	3.93×10^2	5.89×10^2	7.85×10^2	9.82×10^2	1.18×10^3	1.37×10^3	1.57×10^3	1.77×10^3	1.96×10^3
	Pull	1.65×10^2	2.47×10^2	3.30×10^2	4.95×10^2	6.60×10^2	8.25×10^2	9.90×10^2	1.15×10^3	1.32×10^3	1.48×10^3	1.65×10^3
ø63	Push	3.12×10^2	4.68×10^2	6.23×10^2	9.35×10^2	1.25×10^3	1.56×10^3	1.87×10^3	2.18×10^3	2.49×10^3	2.81×10^3	3.12×10^3
	Pull	2.80×10^2	4.20×10^2	5.61×10^2	8.41×10^2	1.12×10^3	1.40×10^3	1.68×10^3	1.96×10^3	2.24×10^3	2.52×10^3	2.80×10^3
ø80	Push	5.03×10^2	7.54×10^2	1.01×10^3	1.51×10^3	2.01×10^3	2.51×10^3	3.02×10^3	3.52×10^3	4.02×10^3	4.52×10^3	5.03×10^3
	Pull	4.54×10^2	6.80×10^2	9.07×10^2	1.36×10^3	1.81×10^3	2.27×10^3	2.72×10^3	3.17×10^3	3.63×10^3	4.08×10^3	4.54×10^3
ø100	Push	7.85×10^2	1.18×10^3	1.57×10^3	2.36×10^3	3.14×10^3	3.93×10^3	4.71×10^3	5.50×10^3	6.28×10^3	7.07×10^3	7.85×10^3
	Pull	7.15×10^2	1.07×10^3	1.43×10^3	2.14×10^3	2.86×10^3	3.57×10^3	4.29×10^3	5.00×10^3	5.72×10^3	6.43×10^3	7.15×10^3

⚠ Be sure to read "Safety precautions" 3. Position locking **SCM-Q** (pages 347, 349 and 350) before use.

SCP*3
CMK2
CMA2
SCM
SCG
SCA2
SCS2
CKV2
CAV2/COVP/N2
SSD2
SSG
SSD
CAT
MDC2
MVC
SMG
MSD/MSDG
FC*
STK
SRL3
SRG3
SRM3
SRT3
MRL2
MRG2
SM-25
ShkAbs
FJ
FK
Spd Contr
Ending

How to order

No switch (built-in magnet for switch)

SCM-Q - LB - 40 ◯ B - 100 - R ———— Q I

With switch (built-in magnet for switch)

SCM-Q - LB - 40 ◯ B - 100 - R - T2H - D - ◯ Q I

Ⓐ Mounting *1, *2

Ⓑ Bore size

Ⓒ Port thread

Ⓓ Cushion

Ⓔ Stroke

Ⓕ Position locking mechanism

Ⓖ Switch model No. *4 *5

Ⓗ Switch quantity

Ⓘ Switch Installation method

Ⓙ Option *7

Ⓚ Accessory *8

Code	Description

Ⓐ Mounting

	Bore size (ø)	20	25	32	40	50	63	80	100
00	Basic	●	●	●	●	●	●	●	●
LB	Axial foot	●	●	●	●	●	●	●	●
FA	Rod side flange	●	●	●	●	●	●	●	●
FB	Head side flange	●	●	●	●	●	●	●	●
CA	Eye bracket	●	●	●	●	●	●		
CB	Clevis bracket (pin and snap ring incl.)							●	●
TA	Rod side trunnion (Rod side position locking N/A)	●	●	●	●	●	●		
TB	Head side trunnion (head side position locking N/A)	●	●	●	●	●	●		

Ⓑ Bore size (mm)

20	ø20
25	ø25
32	ø32
40	ø40
50	ø50
63	ø63
80	ø80
100	ø100

Ⓒ Port thread

Blank	Rc thread
N	NPT thread (made-to-order product) ø32 and over
G	G thread (made-to-order product) ø32 and over

Ⓓ Cushion

B	With two-sided air cushion
R	Rod side air cushioned
H	Head side air cushioned

Ⓔ Stroke (mm)

Bore size	Stroke *2	Custom stroke
ø20 to ø32	10 to 1000	In 1 mm increments
ø40 to ø100	10 to 1500	

Ⓕ Position locking mechanism

R	With rod side position locking
H	With head side position locking

Ⓖ Switch model No.

Axial lead wire	Radial lead wire	Contact	Voltage AC	Voltage DC	Indicator	Lead wire
T0H*	T0V*	Reed	●	●	1-color LED	2-wire
T5H*	T5V*	Reed	●	●	No indicator lamp	2-wire
T8H*	T8V*	Reed	●	●	1-color LED	2-wire
T1H*	T1V*	Proximity	●		1-color LED	2-wire
T2H*	T2V*	Proximity		●	1-color LED	2-wire
T3H*	T3V*	Proximity		●	1-color LED	3-wire
T3PH*	T3PV*	Proximity		●	1-color LED	3-wire
T2WH*	T2WV*	Proximity		●	2-color LED	2-wire
T2YH*	T2YV*	Proximity		●	2-color LED	2-wire
T3WH*	T3WV*	Proximity		●	2-color LED	3-wire
T3YH*	T3YV*	Proximity		●	2-color LED	3-wire
T2YD*	-	Proximity		●	2-color LED AC magnetic field	2-wire
T2YDT*	-	Proximity		●	2-color LED AC magnetic field	2-wire
T2JH*	T2JV*	Proximity		●	1-color LED off-delay	2-wire

*** Lead wire length**

Blank	1 m (standard)
3	3 m (option)
5	5 m (option)

Ⓗ Switch quantity

R	1 on rod side
H	1 on head side
D	2
T	3
4	4 (when there are more than 4 switches, indicate switch quantity.)

Ⓘ Switch mounting

Blank	Rail method
Z	Band method

Ⓙ Option

Q	Switch rail included at shipment
P6	Copper and PTFE free (made-to-order product)

Ⓚ Accessory

	Bore size (ø)	20	25	32	40	50	63	80	100
I	Rod eye	●	●	●	●	●	●	●	●
Y	Rod clevis (pin and snap ring included)	●	●	●	●	●	●	●	●
B1	Eye bracket							●	●
B2	Clevis bracket	●	●	●	●	●	●		

⚠ Precautions for model No. selection

*1 : Mounting bracket will be shipped with the product.
*2 : When the mounting is LB, the cylinder cannot be mounted on the frame if a bracket is already attached to the cylinder. Refer to Safety precautions for details.
*3 : Refer to page 282 for the number of installed switches and the min. stroke.
*4 : Switches other than Ⓖ Switch model No. are also available. (Made to order) Refer to Ending Page 1 for details.
*5 : T8H/V switches cannot be mounted when the bore size is from ø20 to ø40 and the switch mounting style is the rail.
*6 : Refer to Ending Page 85 for custom specifications of rod end form.
*7 : "Q" (switch rail enclosed at shipment) is not available for the "Z" switch mounting.
*8 : "I" and "Y" cannot be selected together.
*9 : Switches are shipped with the product. Contact CKD if assembling before shipment is necessary.

[Example of model No.]

SCM-Q-LB-40B-100-R-T2H-D-QI

Model: Round shaped cylinder, position locking

Ⓐ Mounting	: Axial foot
Ⓑ Bore size	: ø40 mm
Ⓒ Port thread	: Rc thread
Ⓓ Cushion	: With two-sided air cushion
Ⓔ Stroke	:100 mm
Ⓕ Position locking mechanism	: With rod side position locking
Ⓖ Switch model No.	: Proximity T2H switch, lead wire 1 m
Ⓗ Switch quantity	: 2
Ⓘ Switch mounting	: Rail
Ⓙ Option	: Switch rail included at shipment
Ⓚ Accessory	: Rod eye

How to order switch

[Switch mounting: Rail]

● Switch body + mounting rail set

SCM - T0H - D - 40 - 100

- T0H: Switch model No. (Item Ⓖ on page 284)
- D: Switch quantity (Item Ⓗ on page 284)
- 40: Bore size (Item Ⓑ on page 284)
- 100: Stroke (Item Ⓔ on page 284) (*1)

● Mounting rail only

SCM - T - 40 - 100

- T: Mounting rail
- 40: Bore size (Item Ⓑ on page 284)
- 100: Stroke (Item Ⓔ on page 284) (*1) (*2)

[Switch mounting: Band]

● Switch body + mounting bracket set + band

SCM - T2H* - 40 - Z

- T2H*: Switch model No. (Item Ⓖ on page 284)
- 40: Bore size (Item Ⓑ on page 284)

● Mounting bracket set + band

SCM - Z - 40

- 40: Bore size (Item Ⓑ on page 284)

[Switch body only]

SW - T0H

- T0H: Switch model No. (Item Ⓖ on page 284)

*1: Indicate X if the stroke exceeds 300 mm.
If exceeding 300 mm, a short rail (with 100 mm switch adjustment length) will be included per switch.
*2: If indicating X when ordering mounting rails only, order the same number of rails as that of applicable switches.

How to order mounting bracket

Bore size (mm) / Mounting bracket	ø20	ø25	ø32	ø40	ø50	ø63	ø80	ø100
Foot (LB)	SCM-LB-20	SCM-LB-25	SCM-LB-32	SCM-LB-40	SCM-LB-50	SCM-LB-63	SCM-LB-80	SCM-LB-100
Flange (FA/FB)	SCM-FA-20	SCM-FA-25	SCM-FA-32	SCM-FA-40	SCM-FA-50	SCM-FA-63	SCM-FA-80	SCM-FA-100
Eye bracket (CA)	SCM-CA-20	SCM-CA-25	SCM-CA-32	SCM-CA-40	SCM-CA-50	SCM-CA-63	———	———
Clevis bracket (CB)	———	———	———	———	———	———	SCM-CB-80	SCM-CB-100
Trunnion (TA/TB)	SCM-TA-20	SCM-TA-25	SCM-TA-32	SCM-TA-40	SCM-TA-50	SCM-TA-63	———	———

*1: All mounting brackets are supplied with mounting bolts.
*2: The foot mounting bracket is provided as 2 pcs./set.

Clean-room specifications (Catalog No. CB-033SA)

● Anti-dust generation structure for use in cleanrooms

SCM-Q-……- **P7***

SCM-Q-……- **P5***

Specifications for rechargeable battery (Catalog No. CC-1226A)

● Design compatible with rechargeable battery manufacturing process

SCM-Q-…- **P4***

* Contact CKD for details.

Operational explanation

● When locked
When the piston ① of the cylinder moves toward the stroke end, the stopper piston ③ is pushed up along the slope of the sleeve ②.

When the cylinder piston comes to the stroke end and the sleeve groove Ⓐ reaches the stopper piston position, the stopper piston is pushed down by the spring ④ and fits into the groove, completing the lock action.

● When unlocked
When pressure is supplied to the port, the stopper piston pushes up the spring and slips out of the sleeve groove, releasing the lock.

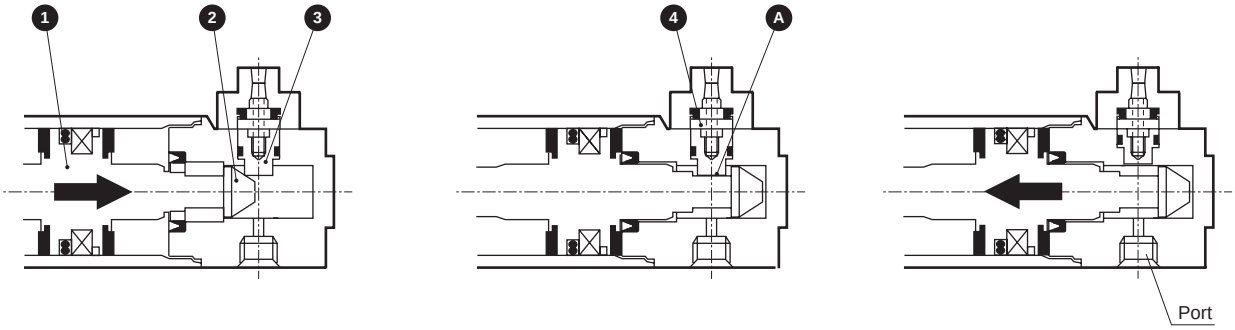

Internal structure and parts list

● SCM-Q (rod side position locking)

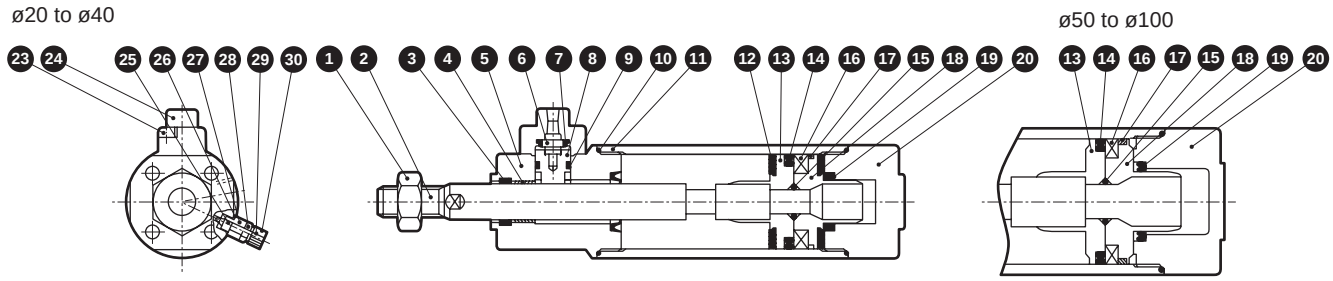

● SCM-Q (head side position locking)

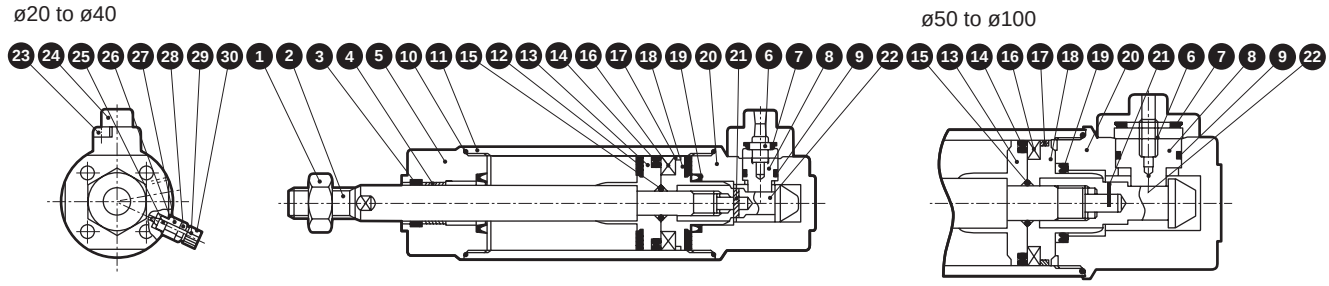

No.	Part name	Material	Remarks	No.	Part name	Material	Remarks
1	Rod nut	Steel	Nickeling	16	Magnet	Plastic	
2	Piston rod	ø20, ø25: Stainless steel ø32 to ø100: Steel	Industrial chrome plating	17	Wear ring	Polyacetal resin	
3	Rod packing	Nitrile rubber		18	Piston H	ø20 to ø40: Aluminum alloy ø50 to ø100: Aluminum alloy die-casting	
4	Bush	Oil impregnated bearing alloy		19	Cushion packing	Nitrile rubber/steel	
5	Rod cover	Aluminum alloy	Hard alumite	20	Head cover	Aluminum alloy	Hard alumite
6	Spring	Steel		21	Spring pin	Steel	
7	Cushion rubber (B)	Urethane rubber		22	Sleeve	Steel	Nitriding
8	Stopper piston	Steel	Nitriding	23	Hex socket screw	Alloy steel	Black finish
9	Piston packing (B)	Nitrile rubber		24	Stopper cover	Aluminum alloy	Chromate
10	Cylinder gasket	Nitrile rubber		25	Needle gasket	Nitrile rubber	
11	Cylinder tube	Aluminum alloy	Hard alumite	26	Holder gasket	Nitrile rubber	
12	Cushion rubber (A)	Urethane rubber		27	Needle holder	Aluminum alloy	
13	Piston R	ø20 to ø40: Aluminum alloy ø50 to ø100: Aluminum alloy die-casting		28	Lock nut	Steel	Nickeling
				29	Needle	Stainless steel	
14	Piston packing (A)	Nitrile rubber		30	Knob	Aluminum alloy	Chromate
15	Piston gasket	Nitrile rubber					

Repair parts list

Bore size (mm)	Kit No.	Repair parts No.
ø20	SCM-Q-20BK	
ø25	SCM-Q-25BK	
ø32	SCM-Q-32BK	
ø40	SCM-Q-40BK	3 7 9 10 12
ø50	SCM-Q-50BK	14 17 19 25 26
ø63	SCM-Q-63BK	
ø80	SCM-Q-80BK	
ø100	SCM-Q-100BK	

Note: Specify the kit No. when placing an order.

SCP*3
CMK2
CMA2
SCM
SCG
SCA2
SCS2
CKV2
CAV2/ COVP/N2
SSD2
SSG
SSD
CAT
MDC2
MVC
SMG
MSD/ MSDG
FC*
STK
SRL3
SRG3
SRM3
SRT3
MRL2
MRG2
SM-25
ShkAbs
FJ
FK
Spd Contr
Ending

Dimensions (ø20 to ø32)

CAD

● Basic (00)
(With rod side position locking)

• Switch mounting: Rail

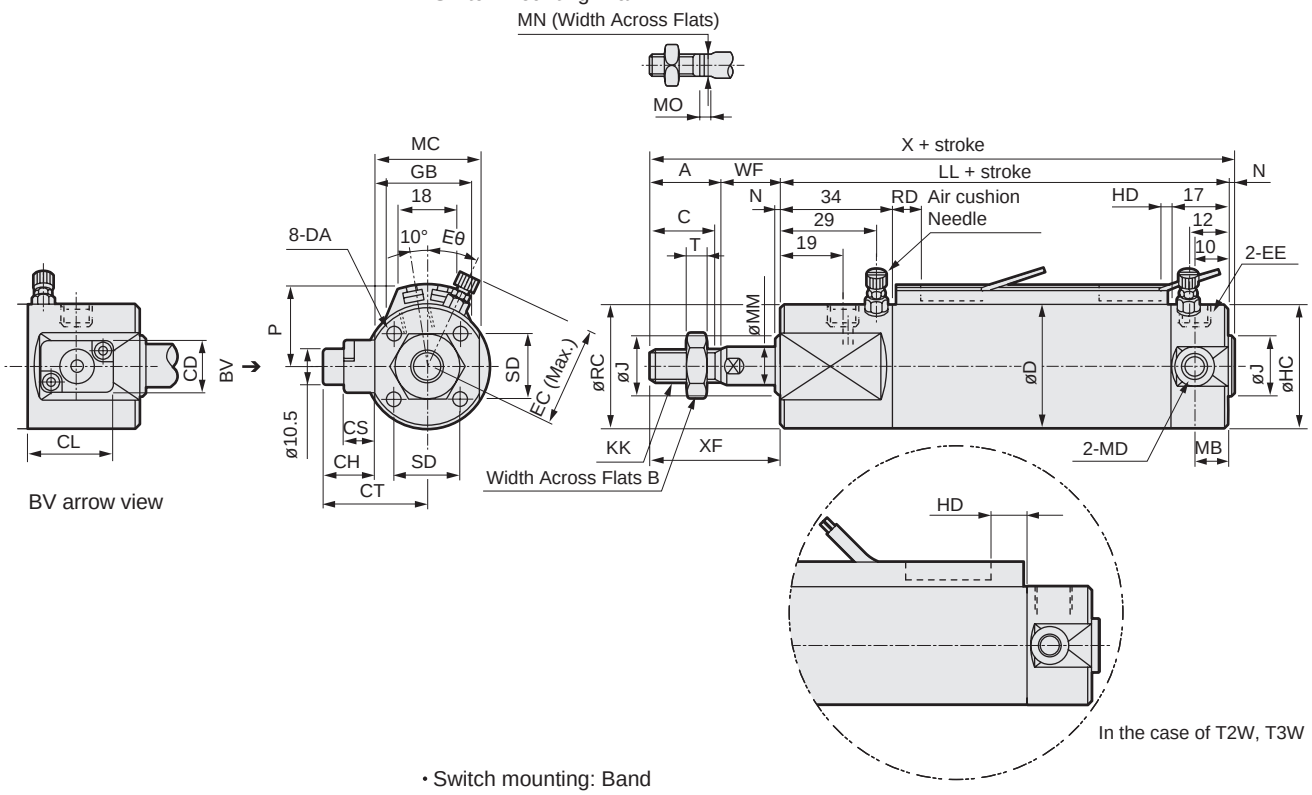

• Switch mounting: Band

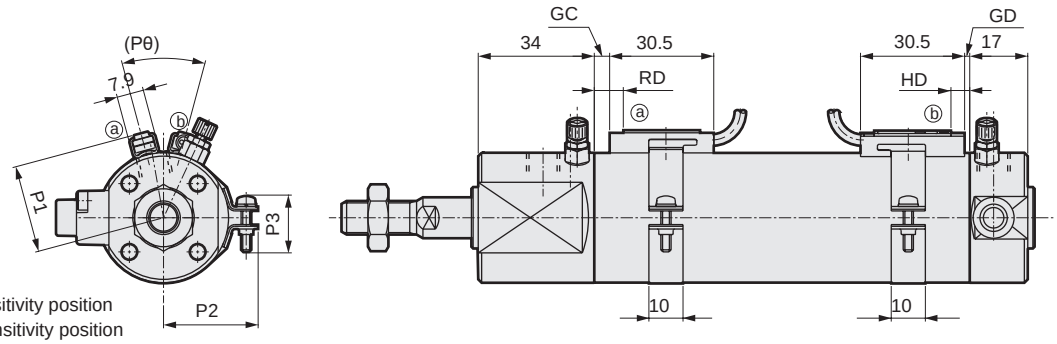

RD: Rod side max. sensitivity position
HD: Head side max. sensitivity position

*1: When the mounting type is LB, the cylinder cannot be mounted on the frame if a bracket is already attached to the cylinder. Refer to Safety precautions for details.
***2: Refer to page 345 for RD, HD and protruding dimensions of the 2-color LED, off-delay, AC magnetic field proof, T1H/V and T8H/V switches.**

Code	Basic (00) Basic dimensions																					
Bore size (mm)	A	B	C	CD	CH	CL	CS	CT	D	DA	EC	EE	Eθ	HC	J	KK	LL	MB	MC	MD	MM	MO
ø20	18	13	16	16	15.5	22	9.5	28	26	M4 depth 6.5	27	M5	30°	26	12	M8	84	11	25	M5	8	4
ø25	22	17	20	16	15.5	22	9.5	31	31	M5 depth 6.5	29.5	M5	30°	31	14	M 10 x 1.25	84	11	31	M6	10	5
ø32	22	17	20	16	15.5	22	9.5	31.5	38	M5 depth 7.5	32.8	Rc1/8	25°	38	18	M 10 x 1.25	86	10	32	M8	12	5.5

Code									Switch mounting: Rail									Switch mounting: Band					
Bore size (mm)	MN	N	RC	SD	T	WF	X	XF	P	GB	HD			RD			GC			GD		
											T0/T5	T2/T2R T3/T3P	T2W T3W	T0/T5	T2/T2R T3/T3P	T2W T3W	T0/T5	T2,T3	T2W T3W	T0/T5	T2,T3	T2W T3W
ø20	6	2	30	14	5	17	121	35	19.5	23	3.0	6.5	8.5	7.5	7.5	9.5	3.5	3.5	5.5	2.5	2.5	4.5
ø25	8	2	35	16.5	6	18	126	40	22	24.4	2.0	5.5	7.5	8.5	8.5	10.5	4.5	4.5	6.5	1.5	1.5	3.5
ø32	10	2	38	20	6	18	128	40	25.5	25	3.0	6.5	8.5	9.5	9.5	11.5	5.5	5.5	7.5	2.5	2.5	4.5

Code									
Bore size (mm)	HD			RD			P1	P2	P3	Pθ
	T0/T5	T2,T3	T2W T3W	T0/T5	T2,T3	T2W T3W				
ø20	6.5	6.5	8.5	7.5	7.5	9.5	19.6	21.5	14	(38°)
ø25	5.5	5.5	7.5	8.5	8.5	10.5	22.1	23.9	14	(34°)
ø32	6.5	6.5	8.5	9.5	9.5	11.5	25.6	27.6	16	(30°)

* Installation dimensions of the mounting are the same as those of SCM (double acting). Refer to pages 240 to 251.
* For the dimensions of the accessories, refer to pages 252 and 253.

Dimensions (ø20 to ø32)

CAD

● Basic (00)
(With head side position locking)

• Switch mounting: Rail

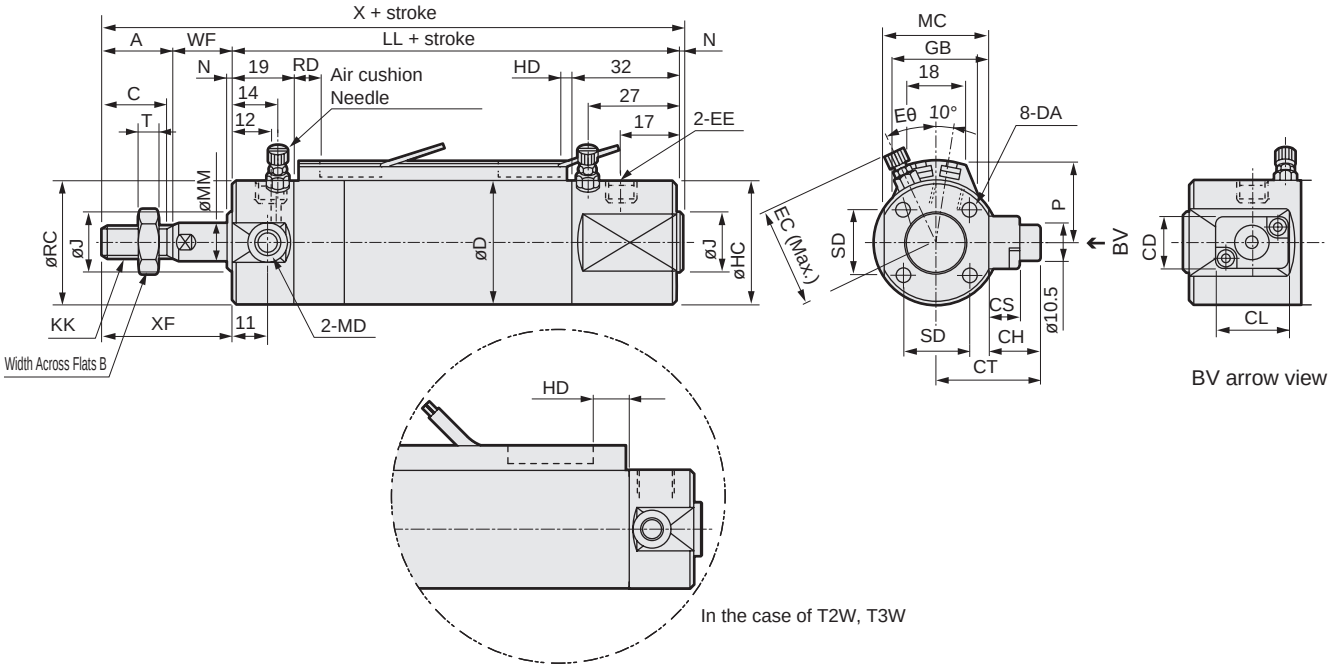

• Switch mounting: Band

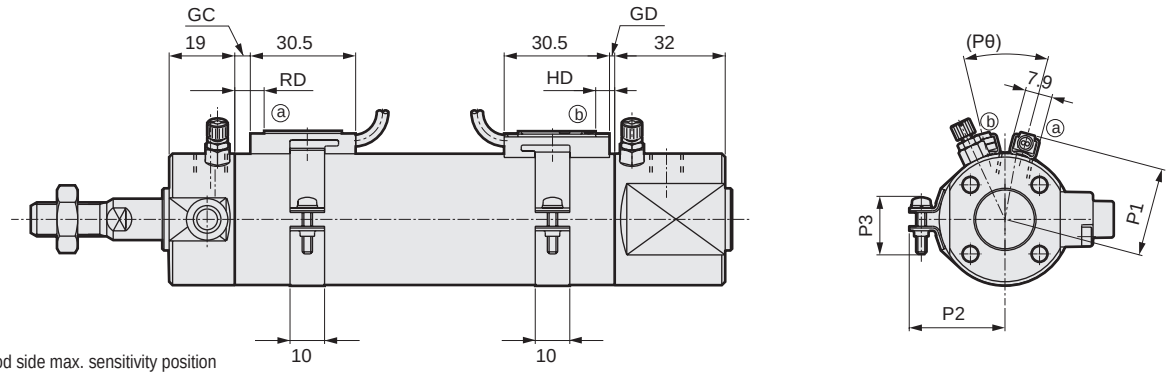

RD: Rod side max. sensitivity position
HD: Head side max. sensitivity position

*1: When the mounting type is LB, the cylinder cannot be mounted on the frame if a bracket is already attached to the cylinder. Refer to Safety precautions for details.
***2: Refer to page 345 for RD, HD and protruding dimensions of the 2-color LED, off-delay, AC magnetic field proof, T1H/V and T8H/V switches.**

Code	Basic (00) Basic dimensions																					
Bore size (mm)	A	B	C	CD	CH	CL	CS	CT	D	DA	EC	EE	Eθ	HC	J	KK	LL	MC	MD	MM	MO	MN
ø20	18	13	16	16	15.5	22	9.5	28	26	M4 depth 6.5	27	M5	30°	30	12	M8	84	25	M5	8	4	6
ø25	22	17	20	16	15.5	22	9.5	31	31	M5 depth 6.5	29.5	M5	30°	35	14	M 10 x 1.25	84	31	M6	10	5	8
ø32	22	17	20	16	15.5	22	9.5	31.5	38	M5 depth 7.5	32.8	Rc1/8	25°	38	18	M 10 x 1.25	86	32	M8	12	5.5	10

Code								Switch mounting: Rail									Switch mounting: Band					
Bore size (mm)	N	RC	SD	T	WF	X	XF	P	GB	HD			RD			GC			GD		
										T0/T5	T2/T2R T3/T3P	T2W T3W	T0/T5	T2/T2R T3/T3P	T2W T3W	T0/T5	T2,T3	T2W T3W	T0/T5	T2,T3	T2W T3W
ø20	2	26	14	5	17	121	35	19.5	23	3.0	6.5	8.5	7.5	7.5	9.5	3.5	3.5	5.5	2.5	2.5	4.5
ø25	2	31	16.5	6	18	126	40	22	24.4	2.0	5.5	7.5	8.5	8.5	10.5	4.5	4.5	6.5	1.5	1.5	3.5
ø32	2	38	20	6	18	128	40	25.5	25	3.0	6.5	8.5	9.5	9.5	11.5	5.5	5.5	7.5	2.5	2.5	4.5

Code										
Bore size (mm)	HD			RD			P1	P2	P3	Pθ
	T0/T5	T2,T3	T2W T3W	T0/T5	T2,T3	T2W T3W				
ø20	6.5	6.5	8.5	7.5	7.5	9.5	19.6	21.5	14	(38°)
ø25	5.5	5.5	7.5	8.5	8.5	10.5	22.1	23.9	14	(34°)
ø32	6.5	6.5	8.5	9.5	9.5	11.5	25.6	27.6	16	(30°)

* Installation dimensions of the mounting are the same as those of SCM (double acting). Refer to pages 240 to 251.
* For the dimensions of the accessories, refer to pages 252 and 253.

SCP*3
CMK2
CMA2
SCM
SCG
SCA2
SCS2
CKV2
CAV2/ COVP/N2
SSD2
SSG
SSD
CAT
MDC2
MVC
SMG
MSD/ MSDG
FC*
STK
SRL3
SRG3
SRM3
SRT3
MRL2
MRG2
SM-25
ShkAbs
FJ
FK
Spd Contr
Ending

Dimensions (ø40 to ø100)

CAD

● Basic (00)
(With rod side position locking)

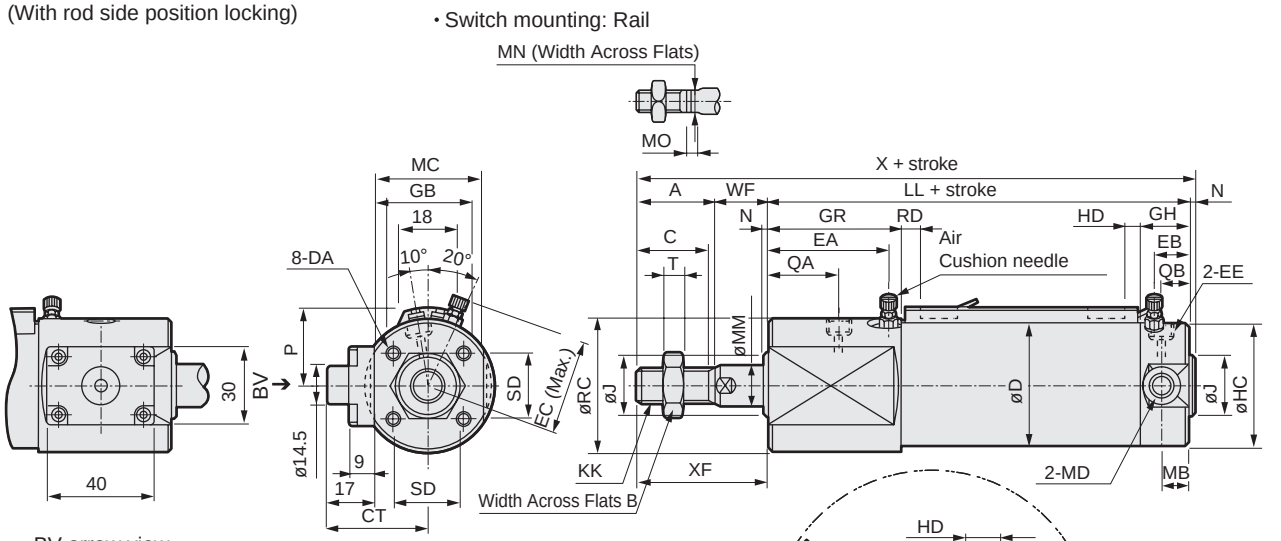

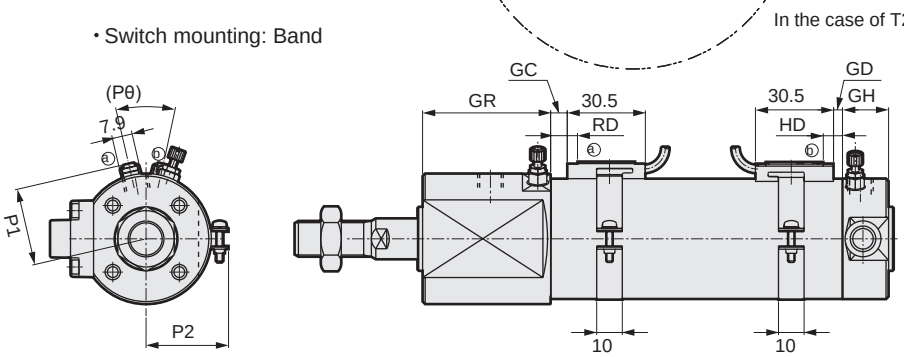

*1: When the mounting type is LB, the cylinder cannot be mounted on the frame if a bracket is already attached to the cylinder. Refer to Safety precautions for details.

***2: Refer to page 345 for RD, HD and protruding dimensions of the 2-color LED, off-delay, AC magnetic field proof, T1H/V and T8H/V switches.**

Code	Basic (00) Basic dimensions																			
Bore size (mm)	A	B	C	CT	D	DA	EA	EB	EC	EE	GH	GR	HC	J	KK	LL	MA	MB	MC	MD
ø40	30	22	27	37.5	47	M6 depth 12	45	14	36.6	Rc1/8	19	50	47	25	M 14 x 1.5	108	12	10	41	M10
ø50	35	27	32	43.5	58	M8 depth 16	48.5	15.5	43	Rc1/4	22	55	58	30	M 18 x 1.5	120	13	12	53	M12
ø63	35	27	32	49.5	72	M10 depth 16	48.5	15.5	50	Rc1/4	22	55	72	32	M 18 x 1.5	120	13	12	65	M14
ø80	40	32	37	57.5	89	M10 depth 22	50	20	58.5	Rc3/8	28	58	89	40	M 22 x 1.5	138	-	-	81	-
ø100	40	41	37	68.5	110	M12 depth 22	50	20	69	Rc1/2	28	58	110	50	M 26 x 1.5	138	-	-	103	-

Code													Switch mounting: Rail				
Bore size (mm)	MM	MO	MN	N	QA	QB	RC	SD	T	WF	X	XF	P	GB	HD T0/T5	HD T2/T2R T3/T3P	HD T2W T3W
ø40	16	6	14	2	26.5	12	51	26	8	20	160	50	30	25.7	5.0	8.5	8.5
ø50	20	8	17	2	30	12	61	32	11	23	180	58	35.5	26.2	7.5	11.0	7.5
ø63	20	8	17	2	30	12	72	38	11	23	180	58	42.5	26.5	7.5	11.0	8.5
ø80	25	11	22	3	31.5	15	89	50	13	31	212	71	51	26.7	9.5	13.0	10.5
ø100	30	13	27	3	31.5	15	110	60	16	31	212	71	61.5	26.7	10.0	13.5	13.0

Code				Switch mounting: Band															
Bore size (mm)	RD T0/T5	RD T2/T2R T3/T3P	RD T2W T3W	GC T0/T5	GC T2,T3	GC T2W T3W	GD T0/T5	GD T2,T3	GD T2W T3W	HD T0/T5	HD T2,T3	HD T2W T3W	RD T0/T5	RD T2,T3	RD T2W T3W	P1	P2	P3	Pθ
ø40	11.5	11.5	9.5	7.5	7.5	5.5	4.5	4.5	4.5	8.5	8.5	8.5	11.5	11.5	9.5	30.2	32.1	14	(26°)
ø50	13.0	13.0	10.5	9.0	9.0	6.5	7.0	7.0	3.5	11.0	11.0	7.5	13.0	13.0	10.5	35.7	37.4	14	(22°)
ø63	13.0	13.0	11.5	9.0	9.0	7.5	7.0	7.0	4.5	11.0	11.0	8.5	13.0	13.0	11.5	42.7	44.4	16	(20°)
ø80	20.0	20.0	13.5	16.0	16.0	9.5	9.0	9.0	6.5	13.0	13.0	10.5	20.0	20.0	13.5	51.2	53.0	16	(16°)
ø100	19.5	19.5	15.0	15.5	15.5	11.0	9.5	9.5	9.0	13.5	13.5	13.0	19.5	19.5	15.0	61.7	63.5	16	(16°)

* Installation dimensions of the mounting are the same as those of SCM (double acting). Refer to pages 240 to 251.
* For the dimensions of the accessories, refer to pages 252 and 253.

Dimensions (ø40 to ø100)

CAD

● Basic (00)
(With head side position locking)

· Switch mounting method: Rail

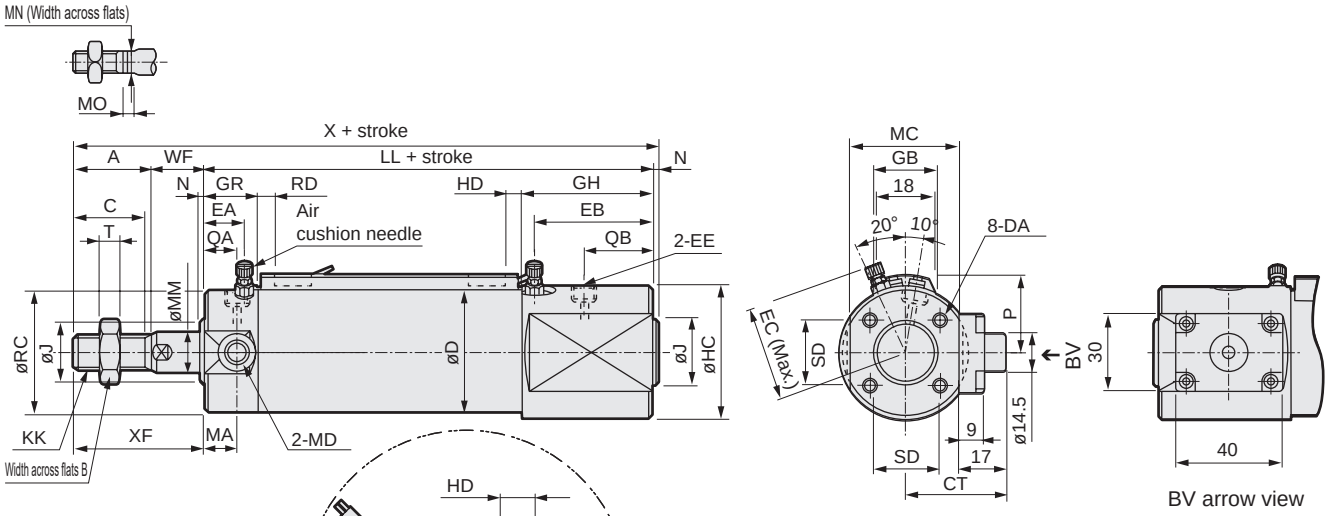

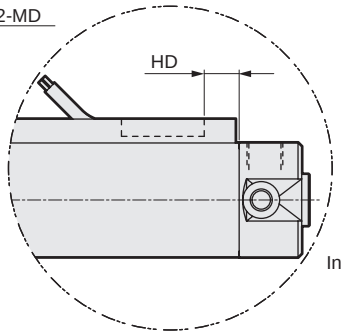

In the case of T2W, T3W

· Switch mounting: Band

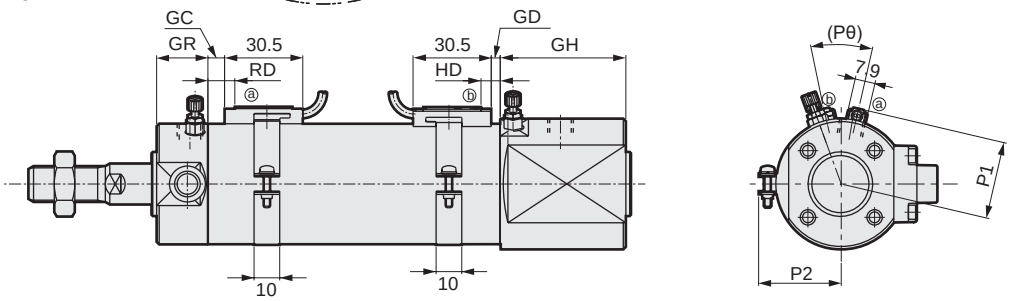

*1 : When the mounting is LB, the cylinder cannot be mounted on the frame if a bracket is already attached to the cylinder. Refer to Safety precautions for details.
*2 : Refer to page 345 for RD, HD and protruding dimensions of the 2-color LED, off-delay, AC magnetic field proof, T1H/V and T8H/V switches.

Code	Basic (00) Basic dimensions																			
Bore size (mm)	A	B	C	CT	D	DA	EA	EB	EC	EE	GH	GR	HC	J	KK	LL	MA	MB	MC	MD
ø40	30	22	27	37.5	47	M6 depth 12	15	44	36.6	Rc1/8	49	20	51	25	M14x1.5	108	12	10	41	M10
ø50	35	27	32	43.5	58	M8 depth 16	18.5	45.5	43	Rc1/4	52	25	61	30	M18x1.5	120	13	12	53	M12
ø63	35	27	32	49.5	72	M10 depth 16	18.5	45.5	50	Rc1/4	52	25	72	32	M18x1.5	120	13	12	65	M14
ø80	40	32	37	57.5	89	M10 depth 22	20	50	58.5	Rc3/8	58	28	89	40	M22x1.5	138	-	-	81	-
ø100	40	41	37	68.5	110	M12 depth 22	20	50	69	Rc1/2	58	28	110	50	M26x1.5	138	-	-	103	-

Code													Switch mounting: Rail							
Bore size (mm)	MM	MO	MN	N	QA	QB	RC	SD	T	WF	X	XF	P	GB	HD			RD		
															T0/T5	T2/T2R T3/T3P	T2W T3W	T0/T5	T2/T2R T3/T3P	T2W T3W
ø40	16	6	14	2	13	25.5	47	26	8	20	160	50	30	25.7	5.0	8.5	8.5	11.5	11.5	9.5
ø50	20	8	17	2	15	27	58	32	11	23	180	58	35.5	26.2	7.5	11.0	7.5	13.0	13.0	10.5
ø63	20	8	17	2	15	27	72	38	11	23	180	58	42.5	26.5	7.5	11.0	8.5	13.0	13.0	11.5
ø80	25	11	22	3	15	31.5	89	50	13	31	212	71	51	26.7	9.5	13.0	10.5	20.0	20.0	13.5
ø100	30	13	27	3	15	31.5	110	60	16	31	212	71	61.5	26.7	10.0	13.5	13.0	19.5	19.5	15.0

Code	Switch mounting: Band															
Bore size (mm)	GC			GD			HD			RD			P1	P2	P3	Pθ
	T0/T5	T2, T3	T2W T3W	T0/T5	T2, T3	T2W T3W	T0/T5	T2, T3	T2W T3W	T0/T5	T2, T3	T2W T3W				
ø40	7.5	7.5	5.5	4.5	4.5	4.5	8.5	8.5	8.5	11.5	11.5	9.5	30.2	32.1	14	(26°)
ø50	9.0	9.0	6.5	7.0	7.0	3.5	11.0	11.0	7.5	13.0	13.0	10.5	35.7	37.4	14	(22°)
ø63	9.0	9.0	7.5	7.0	7.0	4.5	11.0	11.0	8.5	13.0	13.0	11.5	42.7	44.4	16	(20°)
ø80	16.0	16.0	9.5	9.0	9.0	6.5	13.0	13.0	10.5	20.0	20.0	13.5	51.2	53.0	16	(16°)
ø100	15.5	15.5	11.0	9.5	9.5	9.0	13.5	13.5	13.0	19.5	19.5	15.0	61.7	63.5	16	(16°)

* Installation dimensions of the mounting are the same as those of SCM (double acting). Refer to pages 240 to 251.
* For the dimensions of the accessories, refer to pages 252 and 253.

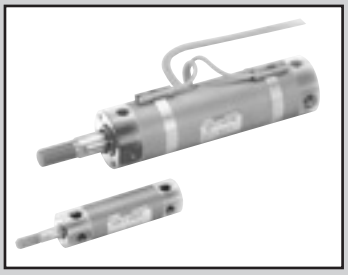

Round shaped cylinder Double acting/fine speed

SCM-F Series

● Bore size: ø20/ø25/ø32/ø40

JIS symbol 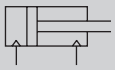

RoHS CAD

Specifications

Item	SCM			
Bore size mm	ø20	ø25	ø32	ø40
Actuation	Double acting/fine speed			
Working fluid	Compressed air			
Max. working pressure MPa	1.0 (≈150 psi, 10 bar)			
Min. working pressure MPa	0.1 (≈15 psi, 1 bar)			
Proof pressure MPa	1.6 (≈230 psi, 16 bar)			
Ambient temperature °C	-10 (14°F) to 60 (140°F) (no freezing)			
Port size	Rc1/8			
Stroke tolerance mm	+1.4 0			
Working piston speed mm/s	1 to 200 (Operate within the allowable absorbed energy.)			
Cushion	Rubber cushion			
Lubrication	Not available			
Allowable absorbed energy J	0.1	0.2	0.5	0.9

Stroke

Bore size (mm)	Standard stroke (mm)	Max. stroke (mm)	Min. stroke (mm)
ø20	25, 50, 75, 100, 125, 150, 200, 250, 300	500	10
ø25			
ø32			
ø40			

*1: The custom stroke is available in 1 mm increments.

Number of installed switches and min. stroke (mm)

● Switch mounting: Rail

Switch quantity	1				2				3				4				5			
Bore size (mm)	Proximity			Reed	Proximity			Reed	Proximity			Reed	Proximity			Reed	Proximity			Reed
	T2, T3	T2W, T3W	T*Y*		T2, T3	T2W, T3W	T*Y*		T2, T3	T2W, T3W	T*Y*		T2, T3	T2W, T3W	T*Y*		T2, T3	T2W, T3W	T*Y*	
ø20	10				25				50	70	70	55	55	70	70	55	75	110	110	90
ø25	10				25				50	70	70	55	55	70	70	55	75	110	110	90
ø32	10				25				50	70	70	55	55	70	70	55	75	110	110	90
ø40	10				25				50	70	70	55	55	70	70	55	75	110	110	90

*1: For types with one switch, when the stroke is between 10 and 24 mm, the trunnion mounting is not available since the switch rail mounting position is different. Refer to page 345 for mounting position.

● Switch mounting: Band

Switch quantity	1				2				3				4				5			
Bore size (mm)	Proximity			Reed	Proximity			Reed	Proximity			Reed	Proximity			Reed	Proximity			Reed
	T2, T3	T2W, T3W	T*Y*		T2, T3	T2W, T3W	T*Y*		T2, T3	T2W, T3W	T*Y*		T2, T3	T2W, T3W	T*Y*		T2, T3	T2W, T3W	T*Y*	
ø20	10				25	30	35	25	50	55	55	50	75	75	80	70	95	100	100	95
ø25	10				25	30	35	25	50	55	55	50	75	75	80	70	95	100	100	95
ø32	10				25	30	35	25	50	55	55	50	75	75	80	70	95	100	100	95
ø40	10				25	30	35	25	50	55	55	50	75	75	80	70	95	100	100	95

Switch specifications

● 1-color/2-color LED

Item	2-wire proximity	2-wire proximity			3-wire proximity				2-wire reed							2-wire proximity
	T1H/ T1V	T2H/T2V/ T2JH/T2JV	T2YH/ T2YV	T2WH/ T2WV	T3H/ T3V	T3PH/ T3PV	T3YH/ T3YV	T3WH/ T3WV	T0H/T0V		T5H/T5V		T8H/T8V			T2YD (*4) T2YDT
Applications	For programming controller, relay, compact solenoid valve	Dedicated for programmable controller			For programmable controller, relay				For programmable controller, relay		For programmable controller, relay (no lamp), serial		For programmable controller, relay			Dedicated for programmable controller
Output method	-				NPN output	PNP output	NPN output	NPN output	-							
Pwr. supp. V.	-				10 to 28 VDC				-							
Load voltage	85 to 265 VAC	10 to 30 VDC		24 VDC ±10%	30 VDC or less				12/24 VDC	100/110 VAC	5/12/24 VDC	100/110 VAC	12/24 VDC	110 VAC	220 VAC	24 VDC ±10%
Load current	5 to 100 mA	5 to 20 mA (*3)			100 mA or less		50 mA or less		5 to 50 mA	7 to 20 mA	50 mA or less	20 mA or less	5 to 50 mA	7 to 20 mA	7 to 10 mA	5 to 20 mA
Indicator	LED (Lit when ON)	LED (Lit when ON)	Red/green LED (Lit when ON)	Red/green LED (Lit when ON)	LED (Lit when ON)	Yellow LED (Lit when ON)	Red/green LED (Lit when ON)	Red/green LED (Lit when ON)	LED (Lit when ON)		No indicator lamp		LED (Lit when ON)			Red/green LED (Lit when ON)
Leakage current	≤ 1 mA at 100 VAC, ≤ 2 mA at 200 VAC	1 mA or less			10 μA or less				0 mA							1 mA or less
Weight g	1 m:33 3 m:87 5 m:142	1 m:18 3 m:49 5 m:80	1 m:33 3 m:87 5 m:142	1 m:18 3 m:49 5 m:80	1 m:18 3 m:49 5 m:80		1 m:33 3 m:87 5 m:142	1 m:18 3 m:49 5 m:80	1 m:18 3 m:49 5 m:80				1 m:33 3 m:87 5 m:142			1 m:61 3 m:166 5 m:272

*1: Refer to Ending Page 1 for detailed switch specifications and dimensions.
*2: Switches other than the above models, such as switches with connectors, are also available. Refer to Ending Page 1.
*3: Max. load current: 20 mA at 25°C. The current is lower than 20 mA if the operating ambient temperature around the switch is higher than 25˚C. (5 to 10 mA at 60°C)
*4: Switch for AC magnetic field (T2YD/T2YDT) cannot be used in DC magnetic field.

Cylinder weight

(Unit: kg)

Item/mounting / Bore size (mm)	Product weight when stroke (S) = 0 mm: Basic (00)	Axial foot (LB)	Flange (FA/FB)	Clevis	Trunnion (TA/TB)	Switch weight (per 1 pc)	Additional weight per S = 10 mm	Additional weight per S = 10 mm (With switch rail)	Band weight per switch
ø 20	0.10	0.21	0.13	0.15	0.11	Refer to the weight in the switch specifications.	0.01	0.012	0.007
ø 25	0.17	0.30	0.21	0.25	0.19		0.014	0.016	0.007
ø 32	0.26	0.42	0.32	0.41	0.29		0.018	0.02	0.007
ø 40	0.41	0.63	0.49	0.64	0.46		0.03	0.032	0.007

(Example) Product weight of SCM-F-LB-40B-100-T2H-D

- Product weight when S = 0 mm ····· 0.63 kg
- Additional weight when S = 100 mm ····· 0.032x $\frac{100}{10}$=0.32 kg
- Weight of 2 switches ····· 0.018x2=0.036 kg
- Product weight ····· 0.63 kg + 0.32 kg + 0.036 kg=0.986 kg

Theoretical thrust table

(Unit: N)

Bore size (mm)	Operating direction	Working pressure MPa: 0.1	0.15	0.2	0.3	0.4	0.5	0.6	0.7	0.8	0.9	1.0
ø20	Push	31.4	47.1	62.8	94.2	$1.26x10^2$	$1.57x10^2$	$1.88x10^2$	$2.20x10^2$	$2.51x10^2$	$2.83x10^2$	$3.14x10^2$
	Pull	26.4	39.6	52.8	79.2	$1.06x10^2$	$1.32x10^2$	$1.58x10^2$	$1.85x10^2$	$2.11x10^2$	$2.38x10^2$	$2.64x10^2$
ø25	Push	49.1	73.6	98.2	$1.47x10^2$	$1.96x10^2$	$2.45x10^2$	$2.95x10^2$	$3.44x10^2$	$3.93x10^2$	$4.42x10^2$	$4.91x10^2$
	Pull	41.2	61.9	82.5	$1.24x10^2$	$1.65x10^2$	$2.06x10^2$	$2.47x10^2$	$2.89x10^2$	$3.30x10^2$	$3.71x10^2$	$4.12x10^2$
ø32	Push	80.4	$1.21x10^2$	$1.61x10^2$	$2.41x10^2$	$3.22x10^2$	$4.02x10^2$	$4.83x10^2$	$5.63x10^2$	$6.43x10^2$	$7.24x10^2$	$8.04x10^2$
	Pull	69.1	$1.04x10^2$	$1.38x10^2$	$2.07x10^2$	$2.76x10^2$	$3.46x10^2$	$4.15x10^2$	$4.84x10^2$	$5.53x10^2$	$6.22x10^2$	$6.91x10^2$
ø40	Push	$1.26x10^2$	$1.88x10^2$	$2.51x10^2$	$3.77x10^2$	$5.03x10^2$	$6.28x10^2$	$7.54x10^2$	$8.80x10^2$	$1.01x10^3$	$1.13x10^3$	$1.26x10^3$
	Pull	$1.06x10^2$	$1.58x10^2$	$2.11x10^2$	$3.17x10^2$	$4.22x10^2$	$5.28x10^2$	$6.33x10^2$	$7.39x10^2$	$8.44x10^2$	$9.50x10^2$	$1.06x10^3$

Dimensions

Same as SCM Series (double acting/single rod). Refer to pages 240 to 251.

SCP*3
CMK2
CMA2
SCM
SCG
SCA2
SCS2
CKV2
CAV2/COVP/N2
SSD2
SSG
SSD
CAT
MDC2
MVC
SMG
MSD/MSDG
FC*
STK
SRL3
SRG3
SRM3
SRT3
MRL2
MRG2
SM-25
ShkAbs
FJ
FK
Spd Contr
Ending

How to order

No switch (built-in magnet for switch)

SCM-F - LB - 40 ◯ D - 100 ——— M I

With switch (built-in magnet for switch)

SCM-F - LB - 40 ◯ D - 100 - T2H - D - Z M I

Model No. Ⓐ Mounting *1 Ⓑ Bore size Ⓒ Port thread Ⓓ Cushion Ⓔ Stroke Ⓕ Switch model No. *3 *4 Ⓖ Switch quantity Ⓗ Switch mounting *6 Ⓘ Option Ⓙ Accessory *6

Code	Description
Ⓐ Mounting	
00	Basic
LB	Axial foot
FA	Rod side flange
FB	Head side flange
CA	Eye bracket
TA	Rod side trunnion
TB	Head side trunnion

Ⓑ Bore size (mm)

20	ø20
25	ø25
32	ø32
40	ø40

Ⓒ Port thread

Blank	Rc thread
N	NPT thread (made-to-order product)
G	G thread (made-to-order product)

Ⓓ Cushion

D	With two-sided rubber cushion

Ⓔ Stroke (mm)

Bore size	Stroke *2	Custom stroke
ø20 to ø40	10 to 500	In 1 mm increments

Ⓕ Switch model No.

Axial lead wire	Radial lead wire	Contact	Voltage AC	Voltage DC	Indicator	Lead wire
T0H*	T0V*	Reed	●	●	1-color LED	2-wire
T5H*	T5V*	Reed	●	●	No indicator lamp	2-wire
T8H*	T8V*	Reed	●	●	1-color LED	2-wire
T1H*	T1V*	Proximity	●		1-color LED	2-wire
T2H*	T2V*	Proximity		●	1-color LED	2-wire
T3H*	T3V*	Proximity		●	1-color LED	3-wire
T3PH*	T3PV*	Proximity		●	1-color LED	3-wire
T2WH*	T2WV*	Proximity		●	2-color LED	2-wire
T2YH*	T2YV*	Proximity		●	2-color LED	2-wire
T3WH*	T3WV*	Proximity		●	2-color LED	3-wire
T3YH*	T3YV*	Proximity		●	2-color LED	3-wire
T2YD*	-	Proximity		●	2-color LED AC magnetic field	2-wire
T2YDT*	-	Proximity		●	2-color LED AC magnetic field	2-wire
T2JH*	T2JV*	Proximity		●	1-color LED off-delay	2-wire

*** Lead wire length**

Blank	1 m (standard)
3	3 m (option)
5	5 m (option)

Ⓖ Switch quantity

R	1 on rod side
H	1 on head side
D	2
T	3
4	4 (when there are more than 4 switches, indicate switch quantity.)

Ⓗ Switch mounting

Blank	Rail method
Z	Band method

Ⓘ Option

Q	Switch rail included at shipment
M	Piston rod material (stainless steel)

Ⓙ Accessory

I	Rod eye
Y	Rod clevis
B2	Clevis bracket

⚠ Precautions for model No. selection

*1 : Mounting bracket will be shipped with the product.
*2 : Refer to page 292 for the number of installed switches and the min. stroke.
*3 : Switches other than Ⓕ Switch model No. are also available. (Made to order) Refer to Ending Page 1 for details.
*4 : T8H/V switches cannot be mounted when the switch mounting style is the rail.
*5 : Refer to Ending Page 85 for custom specifications of rod end form.
*6 : "Q" (switch rail enclosed at shipment) is not available for the "Z" switch mounting.
*7 : I and Y cannot be selected at the same time.
*8 : Switches are shipped with the product. Contact CKD if assembling before shipment is necessary.

[Example of model No.]

SCM-F-LB-40D-100-T2H-D-ZMI

Model: Round shaped cylinder, double acting

Ⓐ Mounting : Axial foot
Ⓑ Bore size : ø40 mm
Ⓒ Port thread : Rc thread
Ⓓ Cushion : With two-sided rubber cushion
Ⓔ Stroke : 100 mm
Ⓕ Switch model No. : Proximity T2H switch, lead wire 1 m
Ⓖ Switch quantity : 2
Ⓗ Switch mounting : Band
Ⓘ Option : Piston rod material (stainless steel)
Ⓙ Accessory : Rod eye

How to order switch

[Switch mounting: Rail]

● Switch body + mounting rail set

SCM - T0H* - D - 40 - 100

- T0H*: Switch model No. (Item Ⓕ on page 294)
- D: Switch quantity (Item Ⓖ on page 294)
- 40: Bore size (Item Ⓑ on page 294)
- 100: Stroke (*1) (Item Ⓔ on page 294)

● Mounting rail only

SCM - T - 40 - 100

- T: Mounting rail
- 40: Bore size (Item Ⓑ on page 294)
- 100: Stroke (*1) (Item Ⓔ on page 294) (*2)

[Switch mounting: Band]

● Switch body + mounting bracket set + band

SCM - T2H* - 40 - Z

- T2H*: Switch model No. (Item Ⓕ on page 294)
- 40: Bore size (Item Ⓑ on page 294)

● Mounting bracket set + band

SCM - Z - 40

- 40: Bore size (Item Ⓑ on page 294)

[Switch body only]

SW - T0H*

- T0H*: Switch model No. (Item Ⓕ on page 294)

*1: Indicate X if the stroke exceeds 300 mm.
If exceeding 300 mm, a short rail (with 100 mm switch adjustment length) will be included per switch.
*2: If indicating X when ordering mounting rails only, order the same number of rails as that of applicable switches.

How to order mounting bracket

Bore size (mm) / Mounting bracket	ø20	ø25	ø32	ø40
Foot (LB)	SCM-LB-20	SCM-LB-25	SCM-LB-32	SCM-LB-40
Flange (FA/FB)	SCM-FA-20	SCM-FA-25	SCM-FA-32	SCM-FA-40
Eye bracket (CA)	SCM-CA-20	SCM-CA-25	SCM-CA-32	SCM-CA-40
Clevis bracket (CB)	-	-	-	-
Trunnion (TA/TB)	SCM-TA-20	SCM-TA-25	SCM-TA-32	SCM-TA-40

*1: All mounting brackets are supplied with mounting bolts.

SCP*3
CMK2
CMA2
SCM
SCG
SCA2
SCS2
CKV2
CAV2/COVP/N2
SSD2
SSG
SSD
CAT
MDC2
MVC
SMG
MSD/MSDG
FC*
STK
SRL3
SRG3
SRM3
SRT3
MRL2
MRG2
SM-25
ShkAbs
FJ
FK
Spd Contr
Ending

Measurement data

Measuring method

SSD-F-16-30

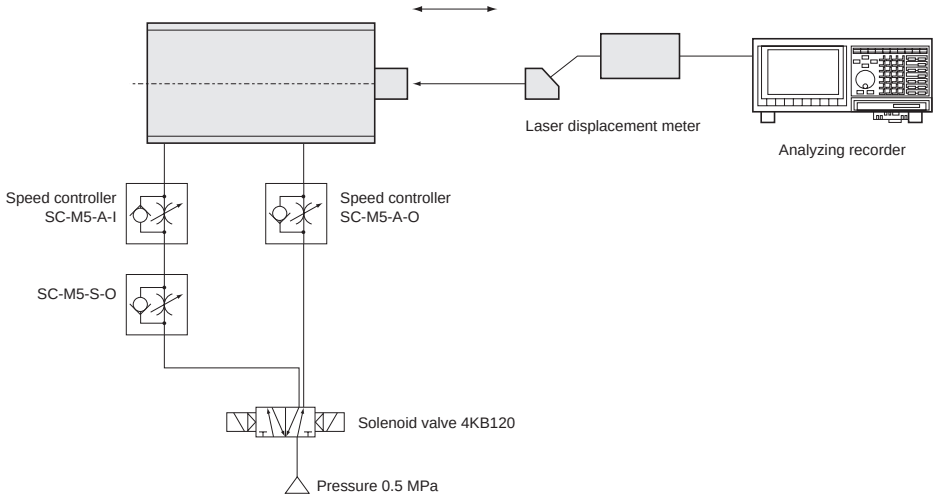

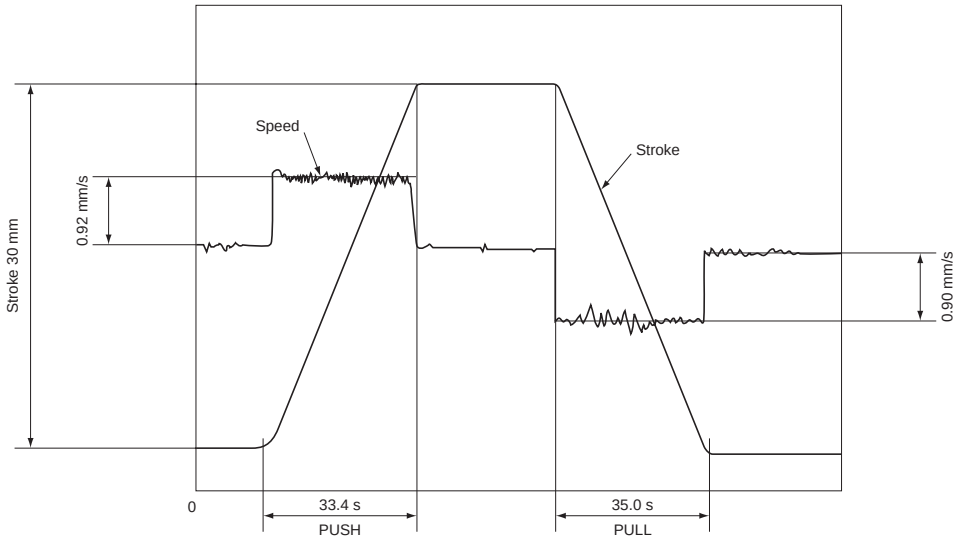

MEMO

Round shaped cylinder Double acting/low speed

SCM-O Series

● Bore size: ø20/ø25/ø32/ø40
ø50/ø63/ø80/ø100

JIS symbol

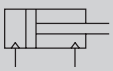

RoHS CAD

Specifications

Item	SCM-O							
Bore size mm	ø20	ø25	ø32	ø40	ø50	ø63	ø80	ø100
Actuation	Double acting/low speed							
Working fluid	Compressed air							
Max. working pressure MPa	1.0 (≈150 psi, 10 bar)							
Min. working pressure MPa	0.1 (≈15 psi, 1 bar)				0.05 (≈7.3 psi, 0.5 bar)			
Proof pressure MPa	1.6 (≈230 psi, 16 bar)							
Ambient temperature °C	-10 (14°F) to 60 (140°F) (no freezing)							
Port size	Rc1/8				Rc1/4		Rc3/8	Rc1/2
Stroke tolerance mm	$^{+1.4}_{0}$ (to 1000)			$^{+1.4}_{0}$ (to 1500)	$^{+2.3}_{0}$ (to 1000), $^{+2.7}_{0}$ (to 1500)			
Working piston speed mm/s	10 to 200 (Operate within the allowable absorbed energy.)							
Cushion	Rubber cushion							
Lubrication	Not available							
Allowable absorbed energy J	0.11	0.2	0.53	0.91	1.6	1.6	3.3	5.8

Stroke

Bore size (mm)	Standard stroke (mm)	Max. stroke (mm)	Min. stroke (mm)
ø20	25, 50, 75 100, 125, 150 200, 250, 300	1000	10
ø25			
ø32			
ø40		1500	
ø50			
ø63			

*1: The custom stroke is available in 1 mm increments.

Number of installed switches and min. stroke (mm)

● Switch mounting: Rail

Switch quantity	1				2				3				4				5			
Bore size (mm)	Proximity			Reed	Proximity			Reed	Proximity			Reed	Proximity			Reed	Proximity			Reed
	T2, T3	T2W, T3W	T*Y*		T2, T3	T2W, T3W	T*Y*		T2, T3	T2W, T3W	T*Y*		T2, T3	T2W, T3W	T*Y*		T2, T3	T2W, T3W	T*Y*	
ø20	10				25				50	70	70	55	55	70	70	55	75	110	110	90
ø25	10				25				50	70	70	55	55	70	70	55	75	110	110	90
ø32	10				25				50	70	70	55	55	70	70	55	75	110	110	90
ø40	10				25				50	70	70	55	55	70	70	55	75	110	110	90
ø50	10				25				50	65	65	55	55	65	65	55	75	110	110	90
ø63	10				25				50	65	65	55	55	65	65	55	75	110	110	90
ø80	10				25				50	65	65	55	55	65	65	55	75	110	110	90
ø100	10				25				50	65	65	55	55	65	65	55	75	110	110	90

● Switch mounting: Band

Switch quantity	1				2				3				4				5			
Bore size (mm)	Proximity			Reed	Proximity			Reed	Proximity			Reed	Proximity			Reed	Proximity			Reed
	T2, T3	T2W, T3W	T*Y*		T2, T3	T2W, T3W	T*Y*		T2, T3	T2W, T3W	T*Y*		T2, T3	T2W, T3W	T*Y*		T2, T3	T2W, T3W	T*Y*	
ø20	10				25	30	35	25	50	55	55	50	75	75	80	70	95	100	100	95
ø25	10				25	30	35	25	50	55	55	50	75	75	80	70	95	100	100	95
ø32	10				25	30	35	25	50	55	55	50	75	75	80	70	95	100	100	95
ø40	10				25	30	35	25	50	55	55	50	75	75	80	70	95	100	100	95
ø50	10				25	30	35	25	50	55	55	50	75	75	80	70	95	100	100	95
ø63	10				25	30	35	25	50	55	55	50	75	75	80	70	95	100	100	95
ø83	10				25	30	35	25	50	55	55	50	75	75	80	70	95	100	100	95
ø100	10				25	30	35	25	50	55	55	50	75	75	80	70	95	100	100	95

*1: For types with one switch, when the stroke is between 10 and 24 mm, the trunnion mounting is not available since the switch rail mounting position is different. Refer to page 345 for mounting position.

Switch specifications

● 1-color/2-color LED

Item	2-wire proximity				3-wire proximity				2-wire reed							2-wire proximity
	T1H/ T1V	T2H/T2V/ T2JH/T2JV	T2YH/ T2YV	T2WH/ T2WV	T3H/ T3V	T3PH/ T3PV	T3YH/ T3YV	T3WH/ T3WV	T0H/T0V		T5H/T5V		T8H/T8V			T2YD (*4) T2YDT
Applications	For programming controller, relay, compact solenoid valve	Dedicated for programmable controller			For programmable controller, relay				For programmable controller, relay		For programmable controller, relay (no lamp), serial		For programmable controller, relay			Dedicated for programmable controller
Output method	-				NPN output	PNP output	NPN output	NPN output	-							
Pwr. supp. V.	-				10 to 28 VDC				-							
Load voltage	85 to 265 VAC	10 to 30 VDC		24 VDC ±10%	30 VDC or less				12/24 VDC	100/110 VAC	5/12/24 VDC	100/110 VAC	12/24 VDC	110 VAC	220 VAC	24 VDC ±10%
Load current	5 to 100 mA	5 to 20 mA (*3)			100 mA or less		50 mA or less		5 to 50 mA	7 to 20 mA	50 mA or less	20 mA or less	5 to 50 mA	7 to 20 mA	7 to 10 mA	5 to 20 mA
Indicator	LED (Lit when ON)	LED (Lit when ON)	Red/green LED (Lit when ON)	Red/green LED (Lit when ON)	LED (Lit when ON)	Yellow LED (Lit when ON)	Red/green LED (Lit when ON)	Red/green LED (Lit when ON)	LED (Lit when ON)		No indicator lamp		LED (Lit when ON)			Red/green LED (Lit when ON)
Leakage current	≤ 1 mA at 100 VAC, ≤ 2 mA at 200 VAC	1 mA or less			10 μA or less				0 mA							1 mA or less
Weight g	1 m:33 3 m:87 5 m:142	1 m:18 3 m:49 5 m:80	1 m:33 3 m:87 5 m:142	1 m:18 3 m:49 5 m:80	1 m:18 3 m:49 5 m:80		1 m:33 3 m:87 5 m:142	1 m:18 3 m:49 5 m:80	1 m:18 3 m:49 5 m:80				1 m:33 3 m:87 5 m:142			1 m:61 3 m:166 5 m:272

*1: Refer to Ending Page 1 for detailed switch specifications and dimensions.
*2: Switches other than the above models, such as switches with connectors, are also available. Refer to Ending Page 1.
*3: Max. load current: 20 mA at 25°C. The current is lower than 20 mA if the operating ambient temperature around the switch is higher than 25˚C. (5 to 10 mA at 60°C)
*4: Switch for AC magnetic field (T2YD/T2YDT) cannot be used in DC magnetic field.

Cylinder weight

(Unit: kg)

Item/mounting / Bore size (mm)	Product weight when stroke (S) = 0 mm					Switch weight (per 1 pc)	Additional weight per S = 10 mm	Additional weight per S = 10 mm (With switch rail)	Band weight per switch
	Basic (00)	Axial foot (LB)	Flange (FA/FB)	Clevis	Trunnion (TA/TB)				
ø20	0.10	0.21	0.13	0.15	0.11	Refer to the weight in the switch specifications.	0.01	0.012	0.007
ø25	0.17	0.30	0.21	0.25	0.19		0.014	0.016	0.007
ø32	0.26	0.42	0.32	0.41	0.29		0.018	0.02	0.007
ø40	0.41	0.63	0.49	0.64	0.46		0.03	0.032	0.007
ø50	0.77	1.25	1.11	1.17	0.91		0.044	0.046	0.008
ø63	1.07	1.79	1.57	1.75	1.21		0.052	0.054	0.009
ø80	2.04	3.00	2.75	2.75	-		0.07	0.072	0.010
ø100	3.17	4.92	4.52	4.45	-		0.098	0.10	0.010

(Example) Product weight of SCM-O-LB-40D-100-T2H-D
- Product weight when S = 0 mm ····· 0.63 kg
- Additional weight when S = 100 mm ····· $0.032 \times \frac{100}{10} = 0.32$ kg
- Weight of 2 switches ····· 0.036 kg
- Product weight ····· 0.63 kg+0.32 kg+0.036=0.986 kg

Theoretical thrust table

(Unit: N)

Bore size (mm)	Operating direction	Working pressure MPa											
		0.05	0.1	0.15	0.2	0.3	0.4	0.5	0.6	0.7	0.8	0.9	1.0
ø20	Push	–	31.4	47.1	62.8	94.2	1.26×10^2	1.57×10^2	1.88×10^2	2.20×10^2	2.51×10^2	2.83×10^2	3.14×10^2
	Pull	–	26.4	39.6	52.8	79.2	1.06×10^2	1.32×10^2	1.58×10^2	1.85×10^2	2.11×10^2	2.38×10^2	2.64×10^2
ø25	Push	–	49.1	73.6	98.2	1.47×10^2	1.96×10^2	2.45×10^2	2.95×10^2	3.44×10^2	3.93×10^2	4.42×10^2	4.91×10^2
	Pull	–	41.2	61.9	82.5	1.24×10^2	1.65×10^2	2.06×10^2	2.47×10^2	2.89×10^2	3.30×10^2	3.71×10^2	4.12×10^2
ø32	Push	–	80.4	1.21×10^2	1.61×10^2	2.41×10^2	3.22×10^2	4.02×10^2	4.83×10^2	5.63×10^2	6.43×10^2	7.24×10^2	8.04×10^2
	Pull	–	69.1	1.04×10^2	1.38×10^2	2.07×10^2	2.76×10^2	3.46×10^2	4.15×10^2	4.84×10^2	5.53×10^2	6.22×10^2	6.91×10^2
ø40	Push	–	1.26×10^2	1.88×10^2	2.51×10^2	3.77×10^2	5.03×10^2	6.28×10^2	7.54×10^2	8.80×10^2	1.01×10^3	1.13×10^3	1.26×10^3
	Pull	–	1.06×10^2	1.58×10^2	2.11×10^2	3.17×10^2	4.22×10^2	5.28×10^2	6.33×10^2	7.39×10^2	8.44×10^2	9.50×10^2	1.06×10^3
ø50	Push	98.0	1.96×10^2	2.95×10^2	3.93×10^2	5.89×10^2	7.85×10^2	9.82×10^2	1.18×10^3	1.37×10^3	1.57×10^3	1.77×10^3	1.96×10^3
	Pull	82.5	1.65×10^2	2.47×10^2	3.30×10^2	4.95×10^2	6.60×10^2	8.25×10^2	9.90×10^2	1.15×10^3	1.32×10^3	1.48×10^3	1.65×10^3
ø63	Push	1.56×10^2	3.12×10^2	4.68×10^2	6.23×10^2	9.35×10^2	1.25×10^3	1.56×10^3	1.87×10^3	2.18×10^3	2.49×10^3	2.81×10^3	3.12×10^3
	Pull	2.40×10^2	2.80×10^2	4.20×10^2	5.61×10^2	8.41×10^2	1.12×10^3	1.40×10^3	1.68×10^3	1.96×10^3	2.24×10^3	2.52×10^3	2.80×10^3
ø80	Push	2.51×10^2	5.03×10^2	7.54×10^2	1.01×10^3	1.51×10^3	2.01×10^3	2.51×10^3	3.02×10^3	3.52×10^3	4.02×10^3	4.52×10^3	5.03×10^3
	Pull	2.27×10^2	4.54×10^2	6.80×10^2	9.07×10^2	1.36×10^3	1.81×10^3	2.27×10^3	2.72×10^3	3.17×10^3	3.63×10^3	4.08×10^3	4.54×10^3
ø100	Push	3.92×10^2	7.85×10^2	1.18×10^3	1.57×10^3	2.36×10^3	3.14×10^3	3.93×10^3	4.71×10^3	5.50×10^3	6.28×10^3	7.07×10^3	7.85×10^3
	Pull	3.57×10^2	7.15×10^2	1.07×10^3	1.43×10^3	2.14×10^3	2.86×10^3	3.57×10^3	4.29×10^3	5.00×10^3	5.72×10^3	6.43×10^3	7.15×10^3

How to order

No switch (built-in magnet for switch)

SCM-O - LB - 40 ( ) D - 100 ——— J I

With switch (built-in magnet for switch)

SCM-O - LB - 40 ( ) D - 100 - T2H - D - ( ) J I

- Ⓐ Mounting *1
- Ⓑ Bore size
- Ⓒ Port thread
- Ⓓ Cushion
- Ⓔ Stroke
- Ⓕ Switch model No. *4 *5
- Ⓖ Switch quantity
- Ⓗ Switch mounting
- Ⓘ Option *2 *6 *8
- Ⓙ Accessory *9

Code	Description								
Ⓐ Mounting									
	Bore size (ø)	20	25	32	40	50	63	80	100
00	Basic	●	●	●	●	●	●	●	●
LB	Axial foot	●	●	●	●	●	●	●	●
FA	Rod side flange	●	●	●	●	●	●	●	●
FB	Head side flange	●	●	●	●	●	●	●	●
CA	Eye bracket	●	●	●	●	●	●		
CB	Clevis bracket (pin and snap ring incl.)							●	●
TA	Rod side trunnion	●	●	●	●	●	●		
TB	Head side trunnion	●	●	●	●	●	●		

Ⓑ Bore size (mm)	
20	ø20
25	ø25
32	ø32
40	ø40
50	ø50
63	ø63
80	ø80
100	ø100

Ⓒ Port thread	
Blank	Rc thread
N	NPT thread (made-to-order product)
G	G thread (made-to-order product)

Ⓓ Cushion	
D	With two-sided rubber cushion

Ⓔ Stroke (mm)

Bore size	Stroke *2	Custom stroke
ø20 to ø32	10 to 1000	In 1 mm increments
ø40 to ø100	10 to 1500	

Ⓕ Switch model No.

Axial lead wire	Radial lead wire	Contact	Voltage AC	Voltage DC	Indicator	Lead wire
T0H*	T0V*	Reed	●	●	1-color LED	2-wire
T5H*	T5V*	Reed	●	●	No indicator lamp	2-wire
T8H*	T8V*	Reed	●	●	1-color LED	2-wire
T1H*	T1V*	Proximity	●		1-color LED	2-wire
T2H*	T2V*	Proximity		●	1-color LED	2-wire
T3H*	T3V*	Proximity		●	1-color LED	3-wire
T3PH*	T3PV*	Proximity		●	1-color LED	3-wire
T2WH*	T2WV*	Proximity		●	2-color LED	2-wire
T2YH*	T2YV*	Proximity		●	2-color LED	2-wire
T3WH*	T3WV*	Proximity		●	2-color LED	3-wire
T3YH*	T3YV*	Proximity		●	2-color LED	3-wire
T2YD*	-	Proximity		●	2-color LED AC magnetic field	2-wire
T2YDT*	-	Proximity		●	2-color LED AC magnetic field	2-wire
T2JH*	T2JV*	Proximity		●	1-color LED off-delay	2-wire

*** Lead wire length**	
Blank	1 m (standard)
3	3 m (option)
5	5 m (option)

Ⓖ Switch quantity	
R	1 on rod side
H	1 on head side
D	2
T	3
4	4 (when there are more than 4 switches, indicate switch quantity.)

Ⓗ Switch mounting	
Blank	Rail method
Z	Band method

Ⓘ Option

		Max. ambient temp.	Instantaneous max. temp.
J	Bellows	100°C	200°C
L	Bellows	250°C	400°C
Q	Switch rail included at shipment		
M	Piston rod material (stainless steel)		

Ⓙ Accessory

Bore size (ø)		20	25	32	40	50	63	80	100
I	Rod eye	●	●	●	●	●	●	●	●
Y	Rod clevis (pin and snap ring included)	●	●	●	●	●	●	●	●
B1	Eye bracket							●	●
B2	Clevis bracket	●	●	●	●	●	●		

Precautions for model No. selection

*1 : Mounting bracket will be shipped with the product.
*2 : If the product is supplied with bellows and the mounting bracket is LB, FA, or TA, it will be shipped assembled.
*3 : Refer to page 298 for the number of installed switches and the min. stroke.
*4 : Switches other than Ⓕ Switch model No. are also available. (Made to order) Refer to Ending Page 1 for details.
*5 : T8H/V switches cannot be mounted when the bore size is from ø20 to ø40 and the switch mounting style is the rail.
*6 : The instantaneous max. temperature is the temperature when sparks, cutting chips, etc., instantaneously contact the bellows.
*7 : Refer to Ending Page 85 for custom specifications of rod end form.
*8 : "Q" (switch rail enclosed at shipment) is not available for the "Z" switch mounting.
*9 : "I" and "Y" cannot be selected together.
*10 : Switches are shipped with the product. Contact CKD if assembling before shipment is necessary.

[Example of model No.]

SCM-O-LB-40D-100-T2H-D-JI

Ⓐ Mounting	:	Axial foot
Ⓑ Bore size	:	ø40 mm
Ⓒ Port thread	:	Rc thread
Ⓓ Cushion	:	With two-sided rubber cushion
Ⓔ Stroke	:	100 mm
Ⓕ Switch model No.	:	Proximity T2H switch, lead wire 1 m
Ⓖ Switch quantity	:	2
Ⓗ Switch mounting	:	Rail
Ⓘ Option	:	Bellows material for max. ambient temperature 100°C
Ⓙ Accessory	:	Rod eye

How to order switch

[Switch mounting: Rail]

● Switch body + mounting rail set

SCM - T0H - D - 40 - 100

- T0H: Switch model No. (Item Ⓕ on page 300)
- D: Switch quantity (Item Ⓖ on page 300)
- 40: Bore size (Item Ⓑ on page 300)
- 100: Stroke (*1) (Item Ⓔ on page 300)

● Mounting rail only

SCM - T - 40 - 100

- T: Mounting rail
- 40: Bore size (Item Ⓑ on page 300)
- 100: Stroke (*2) (*1) (Item Ⓔ on page 300)

*1:Indicate X if the stroke exceeds 300 mm. If exceeding 300 mm, a short rail (with 100 mm switch adjustment length) will be included per switch.
*2:If indicating X when ordering mounting rails only, order the same number of rails as that of applicable switches.

[Switch mounting: Band]

● Switch body + mounting bracket set + band

SCM - T2H* - 40 - Z

- T2H*: Switch model No. (Item Ⓕ on page 300)
- 40: Bore size (Item Ⓑ on page 300)

● Mounting bracket set + band

SCM - Z - 40

- 40: Bore size (Item Ⓑ on page 300)

[Switch body only]

SW - T0H

- T0H: Switch model No. (Item Ⓕ on page 300)

How to order mounting bracket

Bore size (mm) / Mounting bracket	ø20	ø25	ø32	ø40	ø50	ø63	ø80	ø100
Foot (LB)	SCM-LB-20	SCM-LB-25	SCM-LB-32	SCM-LB-40	SCM-LB-50	SCM-LB-63	SCM-LB-80	SCM-LB-100
Flange (FA/FB)	SCM-FA-20	SCM-FA-25	SCM-FA-32	SCM-FA-40	SCM-FA-50	SCM-FA-63	SCM-FA-80	SCM-FA-100
Eye bracket (CA)	SCM-CA-20	SCM-CA-25	SCM-CA-32	SCM-CA-40	SCM-CA-50	SCM-CA-63	-	-
Clevis bracket (CB)	-	-	-	-	-	-	SCM-CB-80	SCM-CB-100
Trunnion (TA/TB)	SCM-TA-20	SCM-TA-25	SCM-TA-32	SCM-TA-40	SCM-TA-50	SCM-TA-63	-	-

*1: All mounting brackets are supplied with mounting bolts.
*2: The foot mounting bracket is provided as 2 pcs./set.

Internal structure

Same as standard. Refer to page 236.

Repair parts list

Bore size (mm)	Kit No.	Repair parts No.
ø20	SCM-O-20K	❸ ❻ ❽ ❿ ⓭
ø25	SCM-O-25K	
ø32	SCM-O-32K	
ø40	SCM-O-40K	
ø50	SCM-O-50K	
ø63	SCM-O-63K	
ø80	SCM-O-80K	
ø100	SCM-O-100K	

Dimensions

Same as standard. Refer to pages 238 to 251.

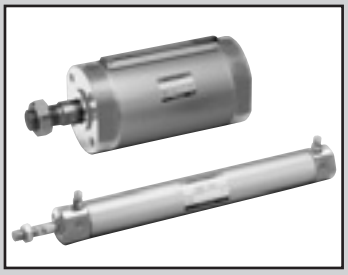

Round shaped cylinder Double acting/low friction

SCM-U Series

● Bore size: ø20/ø25/ø32/ø40/ø50/ø63/ø80/ø100

JIS symbol

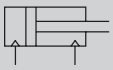

RoHS CAD

Specifications

Item		SCM-U							
Bore size	mm	ø20	ø25	ø32	ø40	ø50	ø63	ø80	ø100
Actuation		Double acting/low friction							
Working fluid		Compressed air							
Max. working pressure	MPa	0.7 (≈100 psi, 7 bar)							
Min. working pressure	MPa	0.03 (≈4.4 psi, 0.3 bar)							
Proof pressure	MPa	1.0 (≈150 psi, 10 bar)							
Ambient temperature	°C	5 (41°F) to 60 (140°F)							
Port size		Rc1/8				Rc1/4		Rc3/8	Rc1/2
Stroke tolerance	mm	$^{+1.4}_{0}$ (to 1000)			$^{+1.4}_{0}$ (to 1500)	$^{+2.3}_{0}$ (to 1000), $^{+2.7}_{0}$ (to 1500)			
Working piston speed	mm/s	10 to 1000 (Operate within the allowable absorbed energy.)							
Cushion		Rubber cushion							
Lubrication		Not available							
Allowable absorbed energy	J	0.1	0.2	0.5	0.9	1.6	1.6	3.3	5.8
Internal leakage rate	ℓ/min	5						8	

Stroke

Bore size (mm)	Standard stroke (mm)	Max. stroke (mm)	Min. stroke (mm)
ø20	25, 50, 75, 100, 125, 150, 200, 250, 300	1000	10
ø25			
ø32			
ø40		1500	
ø50			
ø63			
ø80			
ø100			

*1: The custom stroke is available in 1 mm increments.

Number of installed switches and min. stroke (mm)

● Switch mounting: Rail

Switch quantity	1				2				3				4				5			
Bore size (mm)	Proximity			Reed	Proximity			Reed	Proximity			Reed	Proximity			Reed	Proximity			Reed
	T2, T3	T2W, T3W	T*Y*		T2, T3	T2W, T3W	T*Y*		T2, T3	T2W, T3W	T*Y*		T2, T3	T2W, T3W	T*Y*		T2, T3	T2W, T3W	T*Y*	
ø20	10				25				50	70	70	55	55	70	70	55	75	110	110	90
ø25	10				25				50	70	70	55	55	70	70	55	75	110	110	90
ø32	10				25				50	70	70	55	55	70	70	55	75	110	110	90
ø40	10				25				50	70	70	55	55	70	70	55	75	110	110	90
ø50	10				25				50	65	65	55	55	65	65	55	75	110	110	90
ø63	10				25				50	65	65	55	55	65	65	55	75	110	110	90
ø80	10				25				50	65	65	55	55	65	65	55	75	110	110	90
ø100	10				25				50	65	65	55	55	65	65	55	75	110	110	90

● Switch mounting: Band

Switch quantity	1				2				3				4				5			
Bore size (mm)	Proximity			Reed	Proximity			Reed	Proximity			Reed	Proximity			Reed	Proximity			Reed
	T2, T3	T2W, T3W	T*Y*		T2, T3	T2W, T3W	T*Y*		T2, T3	T2W, T3W	T*Y*		T2, T3	T2W, T3W	T*Y*		T2, T3	T2W, T3W	T*Y*	
ø20	10				25	30	35	25	50	55	55	50	75	75	80	70	95	100	100	95
ø25	10				25	30	35	25	50	55	55	50	75	75	80	70	95	100	100	95
ø32	10				25	30	35	25	50	55	55	50	75	75	80	70	95	100	100	95
ø40	10				25	30	35	25	50	55	55	50	75	75	80	70	95	100	100	95
ø50	10				25	30	35	25	50	55	55	50	75	75	80	70	95	100	100	95
ø63	10				25	30	35	25	50	55	55	50	75	75	80	70	95	100	100	95
ø83	10				25	30	35	25	50	55	55	50	75	75	80	70	95	100	100	95
ø100	10				25	30	35	25	50	55	55	50	75	75	80	70	95	100	100	95

*1: For types with one switch, when the stroke is between 10 and 24 mm, the trunnion mounting is not available since the switch rail mounting position is different. Refer to page 345 for mounting position.

Switch specifications

● 1-color/2-color LED

Item	2-wire proximity	2-wire proximity			3-wire proximity				2-wire reed							2-wire proximity
	T1H/ T1V	T2H/T2V/ T2JH/T2JV	T2YH/ T2YV	T2WH/ T2WV	T3H/ T3V	T3PH/ T3PV	T3YH/ T3YV	T3WH/ T3WV	T0H/T0V		T5H/T5V		T8H/T8V			T2YD (*4) T2YDT
Applications	For programming controller, relay, compact solenoid valve	Dedicated for programmable controller			For programmable controller, relay				For programmable controller, relay		For programmable controller, relay (no lamp), serial		For programmable controller, relay			Dedicated for programmable controller
Output method	-				NPN output	PNP output	NPN output	NPN output	-							
Pwr. supp. V.	-				10 to 28 VDC				-							
Load voltage	85 to 265 VAC	10 to 30 VDC		24 VDC ±10%	30 VDC or less				12/24 VDC	100/110 VAC	5/12/24 VDC	100/110 VAC	12/24 VDC	110 VAC	220 VAC	24 VDC ±10%
Load current	5 to 100 mA	5 to 20 mA (*3)			100 mA or less		50 mA or less		5 to 50 mA	7 to 20 mA	50 mA or less	20 mA or less	5 to 50 mA	7 to 20 mA	7 to 10 mA	5 to 20 mA
Indicator	LED (Lit when ON)	LED (Lit when ON)	Red/green LED (Lit when ON)	Red/green LED (Lit when ON)	LED (Lit when ON)	Yellow LED (Lit when ON)	Red/green LED (Lit when ON)	Red/green LED (Lit when ON)	LED (Lit when ON)		No indicator lamp		LED (Lit when ON)			Red/green LED (Lit when ON)
Leakage current	≤ 1 mA at 100 VAC, ≤ 2 mA at 200 VAC	1 mA or less			10 μA or less				0 mA							1 mA or less
Weight g	1 m:33 3 m:87 5 m:142	1 m:18 3 m:49 5 m:80	1 m:33 3 m:87 5 m:142	1 m:18 3 m:49 5 m:80	1 m:18 3 m:49 5 m:80		1 m:33 3 m:87 5 m:142	1 m:18 3 m:49 5 m:80	1 m:18 3 m:49 5 m:80				1 m:33 3 m:87 5 m:142			1 m:61 3 m:166 5 m:272

*1: Refer to Ending Page 1 for detailed switch specifications and dimensions.
*2: Switches other than the above models, such as switches with connectors, are also available. Refer to Ending Page 1.
*3: Max. load current: 20 mA at 25°C. The current is lower than 20 mA if the operating ambient temperature around the switch is higher than 25˚C. (5 to 10 mA at 60°C)
*4: Switch for AC magnetic field (T2YD/T2YDT) cannot be used in DC magnetic field.

Cylinder weight

(Unit: kg)

Item/mounting / Bore size (mm)	Product weight when stroke (S) = 0 mm: Basic (00)	Axial foot (LB)	Flange (FA/FB)	Clevis	Trunnion (TA/TB)	Switch weight (per 1 pc)	Additional weight per S = 10 mm	Additional weight per S = 10 mm (With switch rail)	Band weight per switch
ø20	0.10	0.21	0.13	0.15	0.11	Refer to the weight in the switch specifications.	0.01	0.012	0.007
ø25	0.17	0.30	0.21	0.25	0.19		0.014	0.016	0.007
ø32	0.26	0.42	0.32	0.41	0.29		0.018	0.02	0.007
ø40	0.41	0.63	0.49	0.64	0.46		0.03	0.032	0.007
ø50	0.77	1.25	1.11	1.17	0.91		0.044	0.046	0.008
ø63	1.07	1.79	1.57	1.75	1.21		0.052	0.054	0.009
ø80	2.04	3.00	2.75	2.75	-		0.07	0.072	0.010
ø100	3.17	4.92	4.52	4.45	-		0.098	0.10	0.010

(Example) Product weight of SCM-U-LB-40D-100-T2H-D
- Product weight when S = 0 mm ····· 0.63 kg
- Additional weight when S = 100 mm ····· $0.032 \times \frac{100}{10} = 0.32$ kg
- Weight of 2 switches ····· 0.036 kg
- Product weight ····· 0.63 kg+0.32 kg+0.036=0.986 kg

Theoretical thrust table

(Unit: N)

Bore size (mm)	Operating direction	Working pressure MPa: 0.03	0.1	0.15	0.2	0.3	0.4	0.5	0.6	0.7
ø20	Push	9.4	31.4	47.1	62.8	94.2	1.26×10^2	1.57×10^2	1.88×10^2	2.20×10^2
	Pull	7.9	26.4	39.6	52.8	79.2	1.06×10^2	1.32×10^2	1.58×10^2	1.85×10^2
ø25	Push	14.7	49.1	73.6	98.2	1.47×10^2	1.96×10^2	2.45×10^2	2.95×10^2	3.44×10^2
	Pull	12.4	41.2	61.9	82.5	1.24×10^2	1.65×10^2	2.06×10^2	2.47×10^2	2.89×10^2
ø32	Push	24.1	80.4	1.21×10^2	1.61×10^2	2.41×10^2	3.22×10^2	4.02×10^2	4.83×10^2	5.63×10^2
	Pull	20.7	69.1	1.04×10^2	1.38×10^2	2.07×10^2	2.76×10^2	3.46×10^2	4.15×10^2	4.84×10^2
ø40	Push	37.7	1.26×10^2	1.88×10^2	2.51×10^2	3.77×10^2	5.03×10^2	6.28×10^2	7.54×10^2	8.80×10^2
	Pull	31.7	1.06×10^2	1.58×10^2	2.11×10^2	3.17×10^2	4.22×10^2	5.28×10^2	6.33×10^2	7.39×10^2
ø50	Push	58.9	1.96×10^2	2.95×10^2	3.93×10^2	5.89×10^2	7.85×10^2	9.82×10^2	1.18×10^3	1.37×10^3
	Pull	49.5	1.65×10^2	2.47×10^2	3.30×10^2	4.95×10^2	6.60×10^2	8.25×10^2	9.90×10^2	1.15×10^3
ø63	Push	93.5	3.12×10^2	4.68×10^2	6.23×10^2	9.35×10^2	1.25×10^3	1.56×10^3	1.87×10^3	2.18×10^3
	Pull	84.1	2.80×10^2	4.20×10^2	5.61×10^2	8.41×10^2	1.12×10^3	1.40×10^3	1.68×10^3	1.96×10^3
ø80	Push	15.1×10^2	5.03×10^2	7.54×10^2	1.01×10^3	1.51×10^3	2.01×10^3	2.51×10^3	3.02×10^3	3.52×10^3
	Pull	13.6×10^2	4.54×10^2	6.80×10^2	9.07×10^2	1.36×10^3	1.81×10^3	2.27×10^3	2.72×10^3	3.17×10^3
ø100	Push	23.6×10^2	7.85×10^2	1.18×10^3	1.57×10^3	2.36×10^3	3.14×10^3	3.93×10^3	4.71×10^3	5.50×10^3
	Pull	21.4×10^2	7.15×10^2	1.07×10^3	1.43×10^3	2.14×10^3	2.86×10^3	3.57×10^3	4.29×10^3	5.00×10^3

How to order

No switch (built-in magnet for switch)

SCM-U - LB - 40 ◯ D - 100 ——— M I

With switch (built-in magnet for switch)

SCM-U - LB - 40 ◯ D - 100 - T2H - D - ◯ M I

Ⓐ Mounting

Rubber cushion

Ⓑ Bore size

Ⓒ Port thread

Ⓓ Stroke

Ⓔ Switch model No. *3 *4

Ⓕ Switch quantity

Ⓖ Switch mounting

Ⓗ Option *6

Ⓘ Accessory *7

Code	Description

Ⓐ Mounting

	Bore size (ø)	20	25	32	40	50	63	80	100
00	Basic	●	●	●	●	●	●	●	●
LB	Axial foot	●	●	●	●	●	●	●	●
FA	Rod side flange	●	●	●	●	●	●	●	●
FB	Head side flange	●	●	●	●	●	●	●	●
CA	Eye bracket	●	●	●	●	●	●		
CB	Clevis bracket (pin and snap ring incl.)							●	●
TA	Rod side trunnion	●	●	●	●	●	●		
TB	Head side trunnion	●	●	●	●	●	●		

Ⓑ Bore size (mm)

20	ø20
25	ø25
32	ø32
40	ø40
50	ø50
63	ø63
80	ø80
100	ø100

Ⓒ Port thread

Blank	Rc thread
N	NPT thread (made-to-order product)
G	G thread (made-to-order product)

Ⓓ Stroke (mm)

Bore size	Stroke *2	Custom stroke
ø20 to ø32	**10 to 1000**	**In 1 mm increments**
ø40 to ø100	**10 to 1500**	

Ⓔ Switch model No.

Axial lead wire	Radial lead wire	Contact	Voltage AC	Voltage DC	Indicator	Lead wire
T0H*	T0V*	Reed	●	●	1-color LED	2-wire
T5H*	T5V*	Reed	●	●	No indicator lamp	2-wire
T8H*	T8V*	Reed	●	●	1-color LED	2-wire
T1H*	T1V*	Proximity	●		1-color LED	2-wire
T2H*	T2V*	Proximity		●	1-color LED	2-wire
T3H*	T3V*	Proximity		●	1-color LED	3-wire
T3PH*	T3PV*	Proximity		●	1-color LED	3-wire
T2WH*	T2WV*	Proximity		●	2-color LED	2-wire
T2YH*	T2YV*	Proximity		●	2-color LED	2-wire
T3WH*	T3WV*	Proximity		●	2-color LED	3-wire
T3YH*	T3YV*	Proximity		●	2-color LED	3-wire
T2YD*	-	Proximity		●	2-color LED for AC magnetic field	2-wire
T2YDT*	-	Proximity		●	2-color LED for AC magnetic field	2-wire
T2JH*	T2JV*	Proximity		●	1-color LED off-delay	2-wire

* Lead wire length

Blank	1 m (standard)
3	3 m (option)
5	5 m (option)

Ⓕ Switch quantity

R	1 on rod side
H	1 on head side
D	2
T	3
4	4 (when there are more than 4 switches, indicate switch quantity.)

Ⓖ Switch mounting

Blank	Rail method
Z	Band method

Ⓗ Option

Q	Switch rail included at shipment
M	Piston rod material (stainless steel)

Ⓘ Accessory

	Bore size (ø)	20	25	32	40	50	63	80	100
I	Rod eye	●	●	●	●	●	●	●	●
Y	Rod clevis (pin and snap ring included)	●	●	●	●	●	●	●	●
B1	Eye bracket							●	●
B2	Clevis bracket	●	●	●	●	●	●		

⚠ Precautions for model No. selection

*1 : Mounting bracket will be shipped with the product.
*2 : Refer to page 302 for the number of installed switches and the min. stroke.
*3 : Switches other than Ⓔ Switch model No. are also available. (Made to order) Refer to Ending Page 1 for details.
*4 : T8H/V switches cannot be mounted when the bore size is from ø20 to ø40 and the switch mounting style is the rail.
*5 : Refer to Ending Page 85 for custom specifications of rod end form.
*6 : "Q" (switch rail enclosed at shipment) is not available for the "Z" switch mounting.
*7 : "I" and "Y" cannot be selected together.
*8 : Switches are shipped with the product. Contact CKD if assembling before shipment is necessary.

[Example of model No.]

SCM-U-LB-40D-100-T2H-D-MI

Model: Round shaped cylinder, double acting/low friction

Ⓐ Mounting	: Axial foot
Ⓑ Bore size	: ø40 mm
Ⓒ Port thread	: Rc thread
Ⓓ Stroke	: 100 mm
Ⓔ Switch model No.	: Proximity T2H switch, lead wire 1 m
Ⓕ Switch quantity	: 2
Ⓖ Switch mounting	: Rail
Ⓗ Option	: Piston rod material/stainless steel
Ⓘ Accessory	: Rod eye

How to order switch

[Switch mounting: Rail]

● Switch body + mounting rail set

SCM - T0H - D - 40 - 100

- T0H: Switch model No. (Item Ⓔ on page 304)
- D: Switch quantity (Item Ⓕ on page 304)
- 40: Bore size (Item Ⓑ on page 304)
- 100: Stroke (*1) (Item Ⓓ on page 304)

● Mounting rail only

SCM - T - 40 - 100

- T: Mounting rail
- 40: Bore size (Item Ⓑ on page 304)
- 100: Stroke (*2) (*1) (Item Ⓓ on page 304)

*1: Indicate X if the stroke exceeds 300 mm.
If exceeding 300 mm, a short rail (with 100 mm switch adjustment length) will be included per switch.
*2: If indicating X when ordering mounting rails only, order the same number of rails as that of applicable switches.

[Switch mounting: Band]

● Switch body + mounting bracket set + band

SCM - T2H* - 40 - Z

- T2H*: Switch model No. (Item Ⓔ on page 304)
- 40: Bore size (Item Ⓑ on page 304)

● Mounting bracket set + band

SCM - Z - 40

- 40: Bore size (Item Ⓑ on page 304)

[Switch body only]

SW - T0H

- T0H: Switch model No. (Item Ⓔ on page 304)

How to order mounting bracket

Bore size (mm) / Mounting bracket	ø20	ø25	ø32	ø40	ø50	ø63	ø80	ø100
Foot (LB)	SCM-LB-20	SCM-LB-25	SCM-LB-32	SCM-LB-40	SCM-LB-50	SCM-LB-63	SCM-LB-80	SCM-LB-100
Flange (FA/FB)	SCM-FA-20	SCM-FA-25	SCM-FA-32	SCM-FA-40	SCM-FA-50	SCM-FA-63	SCM-FA-80	SCM-FA-100
Eye bracket (CA)	SCM-CA-20	SCM-CA-25	SCM-CA-32	SCM-CA-40	SCM-CA-50	SCM-CA-63	-	-
Clevis bracket (CB)	-	-	-	-	-	-	SCM-CB-80	SCM-CB-100
Trunnion (TA/TB)	SCM-TA-20	SCM-TA-25	SCM-TA-32	SCM-TA-40	SCM-TA-50	SCM-TA-63	-	-

*1: All mounting brackets are supplied with mounting bolts.
*2: The foot mounting bracket is provided as 2 pcs./set.

Dimensions

Same as SCM Series (double acting/single rod). Refer to pages 238 to 251.

Sliding resistance

Values are measured under the following conditions. As the values vary with the installation method, pressurizing direction, etc., they are not guaranteed.

(Test conditions)

Cylinder	SCM-U
Mounting direction of cylinder	Vertical
Cylinder speed	10 mm/min (driven by external motor)
Cylinder pressurizing direction	Head side (the rod end is open to atmosphere)

Sliding resistance (ø20 to ø50)

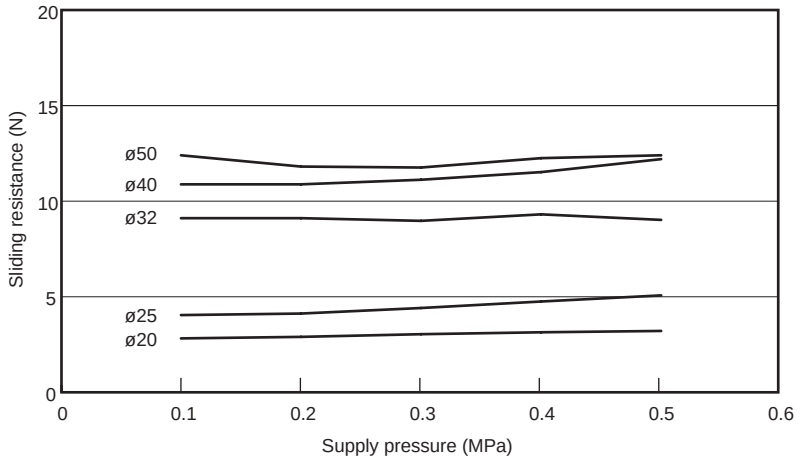

Sliding resistance (ø63 to ø100)

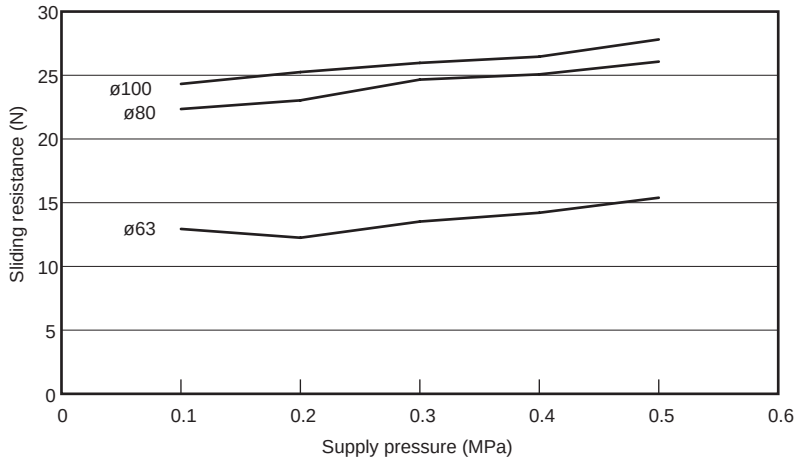

MEMO

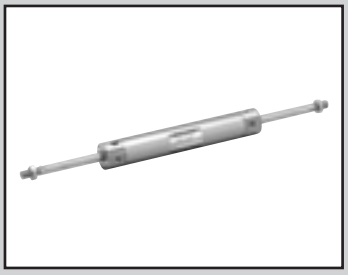

Round shaped cylinder Double acting/double rod

SCM-D Series

● Bore size: ø20/ø25/ø32/ø40
ø50/ø63/ø80/ø100

JIS symbol Double acting cylinder double rod

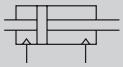

RoHS CAD

Specifications

Item		SCM-D							
Bore size mm		ø20	ø25	ø32	ø40	ø50	ø63	ø80	ø100
Actuation		Double acting/double rod							
Working fluid		Compressed air							
Max. working pressure MPa		1.0 (≈150 psi, 10 bar)							
Min. working pressure MPa		0.15 (≈22 psi, 1.5 bar)				0.1 (≈15 psi, 1 bar)			
Proof pressure MPa		1.6 (≈230 psi, 16 bar)							
Ambient temperature °C		-10 (14°F) to 60 (140°F) (no freezing)							
Port size	With rubber cushion	Rc1/8				Rc1/4	Rc8/3	Rc1/2	
	With air cushion	M5		Rc1/8		Rc1/4	Rc8/3	Rc1/2	
Stroke tolerance mm	With rubber cushion	+1.4 0				+2.3 0 (to 600)			
	With air cushion	+1.4 0				+1.4 0 (to 600)			
Working piston speed mm/s		30 to 1000 (Operate within the allowable absorbed energy.)							
Cushion		Either rubber cushion or air cushion can be selected.							
Effective air cushion length mm		8.1	8.1	8.6	8.6	13.4	13.4	15.4	15.4
Lubrication		Not required (use turbine oil ISO VG32 if necessary for lubrication)							
Allowable absorbed energy J	With rubber cushion	0.1	0.2	0.5	0.9	1.6	1.6	3.3	5.8
	With air cushion	0.8	1.2	2.5	3.7	8.0	14.4	25.4	45.6
	Without cushion	-	-	-	-	0.057	0.057	0.112	0.153

*1: The values of allowable absorbed energy for "No cushion" are the allowable absorbed energy on the non-specified side when an air cushion is selected for the other side ("R" → Head side, "H" → Rod side).
*2: Without any cushion, this product cannot absorb large energy generated by an external load. Provide a shock absorber on the outside.

Stroke

Bore size (mm)	Standard stroke (mm)	Max. stroke (mm)	Min. stroke (mm)
ø20	25, 50, 75, 100, 125, 150, 200, 250, 300	600	10
ø25			
ø32			
ø40			
ø50			
ø63			
ø80			
ø100			

*1: The custom stroke is available in 1 mm increments.

Number of installed switches and min. stroke (mm)

● Switch mounting: Rail

Switch quantity	1				2				3				4				5			
Bore size (mm)	Proximity			Reed	Proximity			Reed	Proximity			Reed	Proximity			Reed	Proximity			Reed
	T2, T3	T2W, T3W	T*Y*		T2, T3	T2W, T3W	T*Y*		T2, T3	T2W, T3W	T*Y*		T2, T3	T2W, T3W	T*Y*		T2, T3	T2W, T3W	T*Y*	
ø20	10				25				50	70	70	55	55	70	70	55	75	110	110	90
ø25	10				25				50	70	70	55	55	70	70	55	75	110	110	90
ø32	10				25				50	70	70	55	55	70	70	55	75	110	110	90
ø40	10				25				50	70	70	55	55	70	70	55	75	110	110	90
ø50	10				25				50	65	65	55	55	65	65	55	75	110	110	90
ø63	10				25				50	65	65	55	55	65	65	55	75	110	110	90
ø80	10				25				50	65	65	55	55	65	65	55	75	110	110	90
ø100	10				25				50	65	65	55	55	65	65	55	75	110	110	90

● Switch mounting: Band

Switch quantity	1				2				3				4				5			
Bore size (mm)	Proximity			Reed	Proximity			Reed	Proximity			Reed	Proximity			Reed	Proximity			Reed
	T2, T3	T2W, T3W	T*Y*		T2, T3	T2W, T3W	T*Y*		T2, T3	T2W, T3W	T*Y*		T2, T3	T2W, T3W	T*Y*		T2, T3	T2W, T3W	T*Y*	
ø20	10				25	30	35	25	50	55	55	50	75	75	80	70	95	100	100	95
ø25	10				25	30	35	25	50	55	55	50	75	75	80	70	95	100	100	95
ø32	10				25	30	35	25	50	55	55	50	75	75	80	70	95	100	100	95
ø40	10				25	30	35	25	50	55	55	50	75	75	80	70	95	100	100	95
ø50	10				25	30	35	25	50	55	55	50	75	75	80	70	95	100	100	95
ø63	10				25	30	35	25	50	55	55	50	75	75	80	70	95	100	100	95
ø83	10				25	30	35	25	50	55	55	50	75	75	80	70	95	100	100	95
ø100	10				25	30	35	25	50	55	55	50	75	75	80	70	95	100	100	95

*1: For types with one switch, when the stroke is between 10 and 24 mm, the trunnion mounting is not available since the switch rail mounting position is different. Refer to page 345 for mounting position.

Switch specifications

● 1-color/2-color LED

Item	2-wire proximity				3-wire proximity				2-wire reed							2-wire proximity
	T1H/ T1V	T2H/T2V/ T2JH/T2JV	T2YH/ T2YV	T2WH/ T2WV	T3H/ T3V	T3PH/ T3PV	T3YH/ T3YV	T3WH/ T3WV	T0H/T0V		T5H/T5V		T8H/T8V			T2YD (*4) T2YDT
Applications	For programming controller, relay, compact solenoid valve	Dedicated for programmable controller			For programmable controller, relay				For programmable controller, relay		For programmable controller, relay (no lamp), serial		For programmable controller, relay			Dedicated for programmable controller
Output method	-				NPN output	PNP output	NPN output	NPN output	-							
Pwr. supp. V.	-				10 to 28 VDC				-							
Load voltage	85 to 265 VAC	10 to 30 VDC		24 VDC ±10%	30 VDC or less				12/24 VDC	100/110 VAC	5/12/24 VDC	100/110 VAC	12/24 VDC	110 VAC	220 VAC	24 VDC ±10%
Load current	5 to 100 mA	5 to 20 mA (*3)			100 mA or less		50 mA or less		5 to 50 mA	7 to 20 mA	50 mA or less	20 mA or less	5 to 50 mA	7 to 20 mA	7 to 10 mA	5 to 20 mA
Indicator	LED (Lit when ON)	LED (Lit when ON)	Red/green LED (Lit when ON)	Red/green LED (Lit when ON)	LED (Lit when ON)	Yellow LED (Lit when ON)	Red/green LED (Lit when ON)	Red/green LED (Lit when ON)	LED (Lit when ON)		No indicator lamp		LED (Lit when ON)			Red/green LED (Lit when ON)
Leakage current	≤ 1 mA at 100 VAC, ≤ 2 mA at 200 VAC	1 mA or less			10 μA or less				0 mA							1 mA or less
Weight g	1 m:33 3 m:87 5 m:142	1 m:18 3 m:49 5 m:80	1 m:33 3 m:87 5 m:142	1 m:18 3 m:49 5 m:80	1 m:18 3 m:49 5 m:80		1 m:33 3 m:87 5 m:142	1 m:18 3 m:49 5 m:80	1 m:18 3 m:49 5 m:80				1 m:33 3 m:87 5 m:142			1 m:61 3 m:166 5 m:272

*1: Refer to Ending Page 1 for detailed switch specifications and dimensions.
*2: Switches other than the above models, such as switches with connectors, are also available. Refer to Ending Page 1.
*3: Max. load current: 20 mA at 25°C. The current is lower than 20 mA if the operating ambient temperature around the switch is higher than 25˚C. (5 to 10 mA at 60°C)
*4: Switch for AC magnetic field (T2YD/T2YDT) cannot be used in DC magnetic field.

Cylinder weight

(Unit: kg)

Item/mounting / Bore size (mm)	Product weight when stroke (S) = 0 mm: Basic (00)	Axial foot (LB)	Flange (FA)	Trunnion (TA)	Switch weight (per 1 pc.)	Per S = 10 mm: Additional weight	Per S = 10 mm: Additional weight (With switch rail)
ø20	0.12	0.23	0.20	0.13	Refer to the weight in the switch specifications.	0.014	0.016
ø25	0.21	0.34	0.31	0.23		0.020	0.22
ø32	0.32	0.48	0.46	0.35		0.026	0.028
ø40	0.52	0.74	0.72	0.57		0.046	0.048
ø50	0.96	1.44	1.30	1.10		0.068	0.070
ø63	1.27	1.99	1.77	1.41		0.076	0.078
ø80	2.41	3.37	3.12	-		0.108	0.110
ø100	3.73	5.48	5.08	-		0.154	0.156

(Example) Product weight of SCM-D-LB-40B-100-T2H-D
- Product weight when S = 0 mm ····· 0.74 km
- Additional weight when S = 100 mm ····· $0.048 \times \frac{100}{10} = 0.48$ kg
- Weight of 2 switches ····· 0.018 x 2 = 0.036 kg
- Product weight ····· 0.74 + 0.48 + 0.036 = 1.256kg

Theoretical thrust table

(Unit: N)

Bore size (mm)	Operating direction	Working pressure MPa: 0.1	0.15	0.2	0.3	0.4	0.5	0.6	0.7	0.8	0.9	1.0
ø20	Push/Pull	-	39.6	52.8	79.2	1.06×10^2	1.32×10^2	1.58×10^2	1.85×10^2	2.11×10^2	2.38×10^2	2.64×10^2
ø25	Push/Pull	-	61.9	82.5	1.24×10^2	1.65×10^2	2.06×10^2	2.47×10^2	2.89×10^2	3.30×10^2	3.71×10^2	4.12×10^2
ø32	Push/Pull	-	1.04×10^2	1.38×10^2	2.07×10^2	2.76×10^2	3.46×10^2	4.15×10^2	4.84×10^2	5.53×10^2	6.22×10^2	6.91×10^2
ø40	Push/Pull	-	1.58×10^2	2.11×10^2	3.17×10^2	4.22×10^2	5.28×10^2	6.33×10^2	7.39×10^2	8.44×10^2	9.50×10^2	1.06×10^3
ø50	Push/Pull	1.65×10^2	2.47×10^2	3.30×10^2	4.95×10^2	6.60×10^2	8.25×10^2	9.90×10^2	1.15×10^3	1.32×10^3	1.48×10^3	1.65×10^3
ø63	Push/Pull	2.80×10^2	4.20×10^2	5.61×10^2	8.41×10^2	1.12×10^3	1.40×10^3	1.68×10^3	1.96×10^3	2.24×10^3	2.52×10^3	2.80×10^3
ø80	Push/Pull	4.54×10^2	6.80×10^2	9.07×10^2	1.36×10^3	1.81×10^3	2.27×10^3	2.72×10^3	3.17×10^3	3.63×10^3	4.08×10^3	4.54×10^3
ø100	Push/Pull	7.15×10^2	1.07×10^3	1.43×10^3	2.14×10^3	2.86×10^3	3.57×10^3	4.29×10^3	5.00×10^3	5.72×10^3	6.43×10^3	7.15×10^3

SCP*3
CMK2
CMA2
SCM
SCG
SCA2
SCS2
CKV2
CAV2/COVP/N2
SSD2
SSG
SSD
CAT
MDC2
MVC
SMG
MSD/MSDG
FC*
STK
SRL3
SRG3
SRM3
SRT3
MRL2
MRG2
SM-25
ShkAbs
FJ
FK
Spd Contr
Ending

How to order

No switch (built-in magnet for switch)

SCM-D - LB - 40 ◯ B - 100 ——— J I

With switch (built-in magnet for switch)

SCM-D - LB - 40 ◯ B - 100 - T2H - D - ◯ J I

Ⓐ Mounting
Ⓑ Bore size
Ⓒ Port thread
Ⓓ Cushion
Ⓔ Stroke
Ⓕ Switch model No. *4 *5
Ⓖ Switch quantity
Ⓗ Switch mounting
Ⓘ Option *2 *6 *8
Ⓙ Accessory

Code	Description

Ⓐ Mounting

	Bore size (ø)	20	25	32	40	50	63	80	100
00	Basic	●	●	●	●	●	●	●	●
LB	Axial foot	●	●	●	●	●	●	●	●
FA	Rod side flange	●	●	●	●	●	●	●	●
TA	Rod side trunnion	●	●	●	●	●	●		

Ⓑ Bore size (mm)

20	ø20
25	ø25
32	ø32
40	ø40
50	ø50
63	ø63
80	ø80
100	ø100

Ⓒ Port thread

Blank	Rc thread
N	NPT thread (made-to-order product)
G	G thread (made-to-order product)

Ⓓ Cushion

B	With two-sided air cushion
R	Rod side air cushioned
H	Head side air cushioned
D	With two-sided rubber cushion

Ⓔ Stroke (mm)

Bore size	Stroke	Custom stroke
ø20 to ø100	10 to 600	In 1 mm increments

Ⓕ Switch model No.

Axial lead wire	Radial lead wire	Contact	Voltage AC	Voltage DC	Indicator	Lead wire
T0H*	T0V*	Reed	●	●	1-color LED	2-wire
T5H*	T5V*	Reed	●	●	No indicator lamp	2-wire
T8H*	T8V*	Reed	●	●	1-color LED	2-wire
T1H*	T1V*	Proximity	●		1-color LED	2-wire
T2H*	T2V*	Proximity		●	1-color LED	2-wire
T3H*	T3V*	Proximity		●	1-color LED	3-wire
T3PH*	T3PV*	Proximity		●	1-color LED	3-wire
T2WH*	T2WV*	Proximity		●	2-color LED	2-wire
T2YH*	T2YV*	Proximity		●	2-color LED	2-wire
T3WH*	T3WV*	Proximity		●	2-color LED	3-wire
T3YH*	T3YV*	Proximity		●	2-color LED	3-wire
T2YD*	-	Proximity		●	2-color LED AC magnetic field	2-wire
T2YDT*	-	Proximity		●	2-color LED AC magnetic field	2-wire
T2JH*	T2JV*	Proximity		●	1-color LED off-delay	2-wire

* Lead wire length

Blank	1 m (standard)
3	3 m (option)
5	5 m (option)

Ⓖ Switch quantity

R	1 on rod side
H	1 on head side
D	2
T	3
4	4 (when there are more than 4 switches, indicate switch quantity.)

Ⓗ Switch mounting

Blank	Rail method
Z	Band method

Ⓘ Option

		Max. ambient temp.	Instantaneous max. temp.
J	Bellows	100°C	200°C
L	Bellows	250°C	400°C
Q	Switch rail included at shipment		
M	Piston rod material (stainless steel)		
P6	Copper and PTFE free		

Ⓙ Accessory

	Bore size (ø)	20	25	32	40	50	63	80	100
I	Rod eye	●	●	●	●	●	●	●	●
Y	Rod clevis (pin and snap ring included)	●	●	●	●	●	●	●	●
B2	Clevis bracket	●	●	●	●	●	●		

⚠ Precautions for model No. selection

*1 : Mounting bracket will be shipped with the product.
*2 : If the product is supplied with bellows and the mounting bracket is LB, FA, or TA, it will be shipped assembled.
*3 : Refer to page 308 for the number of installed switches and the min. stroke.
*4 : Switches other than Ⓕ Switch model No. are also available. (Made to order) Refer to Ending Page 1 for details.
*5 : T8H/V switches cannot be mounted when the bore size is from ø20 to ø40 and the switch mounting style is the rail.
*6 : The instantaneous max. temperature is the temperature when sparks, cutting chips, etc., instantaneously contact the bellows.
*7 : Refer to Ending Page 85 for custom specifications of rod end form.
*8 : "Q" (switch rail enclosed at shipment) is not available for the "Z" switch mounting.
*9 : Switches are shipped with the product. Contact CKD if assembling before shipment is necessary.

[Example of model No.]

SCM-D-LB-40B-100-T2H-D-JI

Model: Round shaped cylinder, double acting/double rod

Ⓐ	Mounting	: Axial foot
Ⓑ	Bore size	: ø40 mm
Ⓒ	Port thread	: Rc thread
Ⓓ	Cushion	: With two-sided air cushion
Ⓔ	Stroke	: 100 mm
Ⓕ	Switch model No.	: Proximity T2H switch, lead wire 1 m
Ⓖ	Switch quantity	: 2
Ⓗ	Switch mounting	: Rail
Ⓘ	Option	: Bellows material for max. ambient temperature 100°C
Ⓙ	Accessory	: Rod eye

How to order switch

[Switch mounting: Rail]

● Switch body + mounting rail set

SCM - T0H - D - 40 - 100

- T0H: Switch model No. (Item Ⓕ on page 310)
- D: Switch quantity (Item Ⓖ on page 310)
- 40: Bore size (Item Ⓑ on page 310)
- 100: Stroke (*1) (Item Ⓔ on page 310)

● Mounting rail only

SCM - T - 40 - 100

- T: Mounting rail
- 40: Bore size (Item Ⓑ on page 310)
- 100: Stroke (*2) (Item Ⓔ on page 310) (*1)

*1: Indicate X if the stroke exceeds 300 mm.
If exceeding 300 mm, a short rail (with 100 mm switch adjustment length) will be included per switch.
*2: If indicating X when ordering mounting rails only, order the same number of rails as that of applicable switches.

[Switch mounting: Band]

● Switch body + mounting bracket set + band

SCM - T2H* - 40 - Z

- T2H*: Switch model No. (Item Ⓕ on page 310)
- 40: Bore size (Item Ⓑ on page 310)

● Mounting bracket set + band

SCM - Z - 40

- 40: Bore size (Item Ⓑ on page 310)

[Switch body only]

SW - T0H

- T0H: Switch model No. (Item Ⓕ on page 310)

How to order mounting bracket

Bore size (mm) / Mounting bracket	ø20	ø25	ø32	ø40	ø50	ø63	ø80	ø100
Foot (LB)	SCM-LB-20	SCM-LB-25	SCM-LB-32	SCM-LB-40	SCM-LB-50	SCM-LB-63	SCM-LB-80	SCM-LB-100
Flange (FA)	SCM-FA-20	SCM-FA-25	SCM-FA-32	SCM-FA-40	SCM-FA-50	SCM-FA-63	SCM-FA-80	SCM-FA-100
Trunnion (TA)	SCM-TA-20	SCM-TA-25	SCM-TA-32	SCM-TA-40	SCM-TA-50	SCM-TA-63	-	-

*1: All mounting brackets are supplied with mounting bolts.
*2: The foot mounting bracket is provided as 2 pcs./set.

SCP*3
CMK2
CMA2
SCM
SCG
SCA2
SCS2
CKV2
CAV2/COVP/N2
SSD2
SSG
SSD
CAT
MDC2
MVC
SMG
MSD/MSDG
FC*
STK
SRL3
SRG3
SRM3
SRT3
MRL2
MRG2
SM-25
ShkAbs
FJ
FK
Spd Contr
Ending

Internal structure and parts list

● With rubber cushion

ø20 to ø40

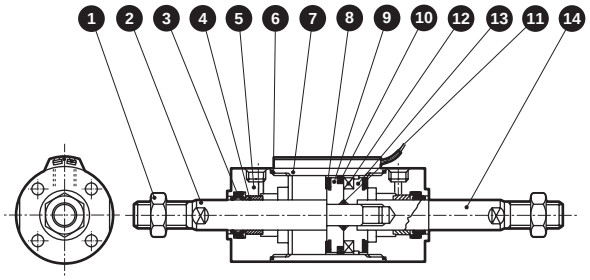

ø50 to ø100

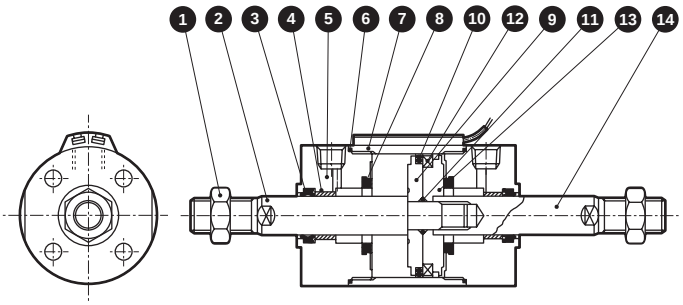

● With air cushion

ø20 to ø40

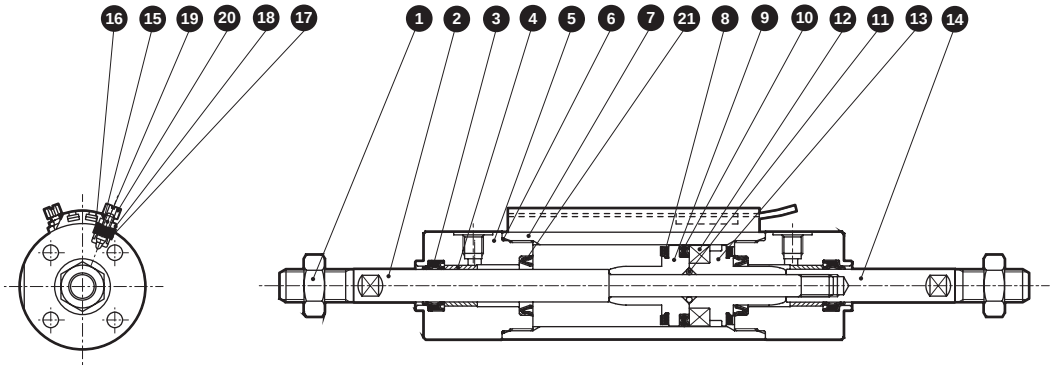

ø50 to ø100

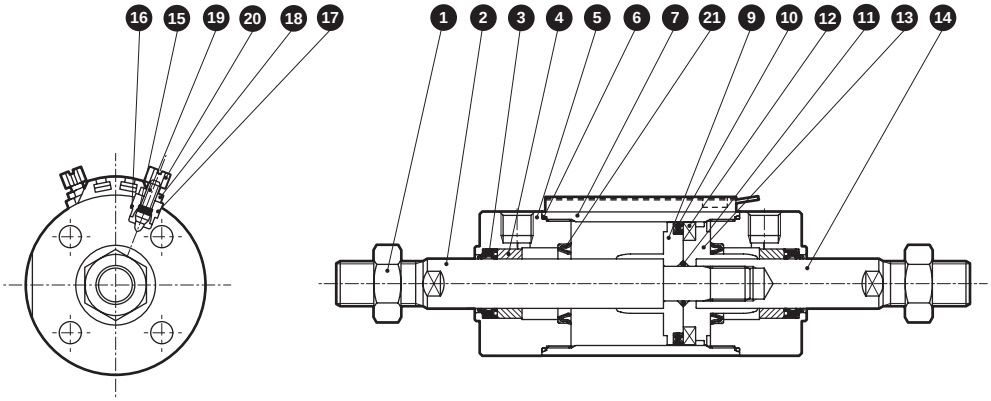

No.	Part name	Material	Remarks	No.	Part name	Material	Remarks
1	Rod nut	Steel	Nickeling	12	Magnet	Plastic	
2	Piston rod A	ø20, ø25: Stainless steel ø32 to ø100: Steel	Industrial chrome plating	13	Piston H	ø20 to ø40: Aluminum alloy ø50 to ø100: Aluminum alloy die-casting	
3	Rod packing	Nitrile rubber		14	Piston rod B	ø20, ø25: Stainless steel ø32 to ø100: Steel	Industrial chrome plating
4	Bush	Oil impregnated bearing alloy *1					
5	Rod cover	Aluminum alloy	Hard alumite	With air cushion			
6	Cylinder gasket	Nitrile rubber		15	Needle gasket	Nitrile rubber	
7	Cylinder tube	Aluminum alloy	Hard alumite	16	Holder gasket	Nitrile rubber	
8	Cushion rubber	Urethane rubber		17	Needle holder	Aluminum alloy	
9	Piston R	ø20 to ø40: Aluminum alloy ø50 to ø100: Aluminum alloy die-casting		18	Lock nut	Steel	Nickeling
				19	Needle	Stainless steel	
10	Piston packing	Nitrile rubber		20	Knob	Aluminum alloy	Chromate
11	Piston gasket	Nitrile rubber		21	Cushion packing	Nitrile rubber/steel	

*1: Oil-impregnated cast iron bearing for copper and PTFE free.

Repair parts list

Note: Specify the kit No. when placing an order.

With rubber cushion

Bore size (mm)	Kit No.	Repair parts No.
ø20	SCM-D-20DK	❸ ❻ ❽ ❿
ø25	SCM-D-25DK	
ø32	SCM-D-32DK	
ø40	SCM-D-40DK	
ø50	SCM-D-50DK	
ø63	SCM-D-63DK	
ø80	SCM-D-80DK	
ø100	SCM-D-100DK	

With air cushion

Bore size (mm)	Kit No.	Repair parts No.
ø20	SCM-D-20BK	*2 ❸ ❻ ❽ ❿ ⓯ ⓰ ㉑
ø25	SCM-D-25BK	
ø32	SCM-D-32BK	
ø40	SCM-D-40BK	
ø50	SCM-D-50BK	
ø63	SCM-D-63BK	
ø80	SCM-D-80BK	
ø100	SCM-D-100BK	

*1: ❸, ❻ and ❿ are the same as those of the type with rubber cushion.
*2: ❽ is not supplied with ø50 to ø100.

SCP*3
CMK2
CMA2
SCM
SCG
SCA2
SCS2
CKV2
CAV2/COVP/N2
SSD2
SSG
SSD
CAT
MDC2
MVC
SMG
MSD/MSDG
FC*
STK
SRL3
SRG3
SRM3
SRT3
MRL2
MRG2
SM-25
ShkAbs
FJ
FK
Spd Contr
Ending

Dimensions CAD

● Double acting double rod (00)
[With rubber cushion]
• Switch mounting: Rail

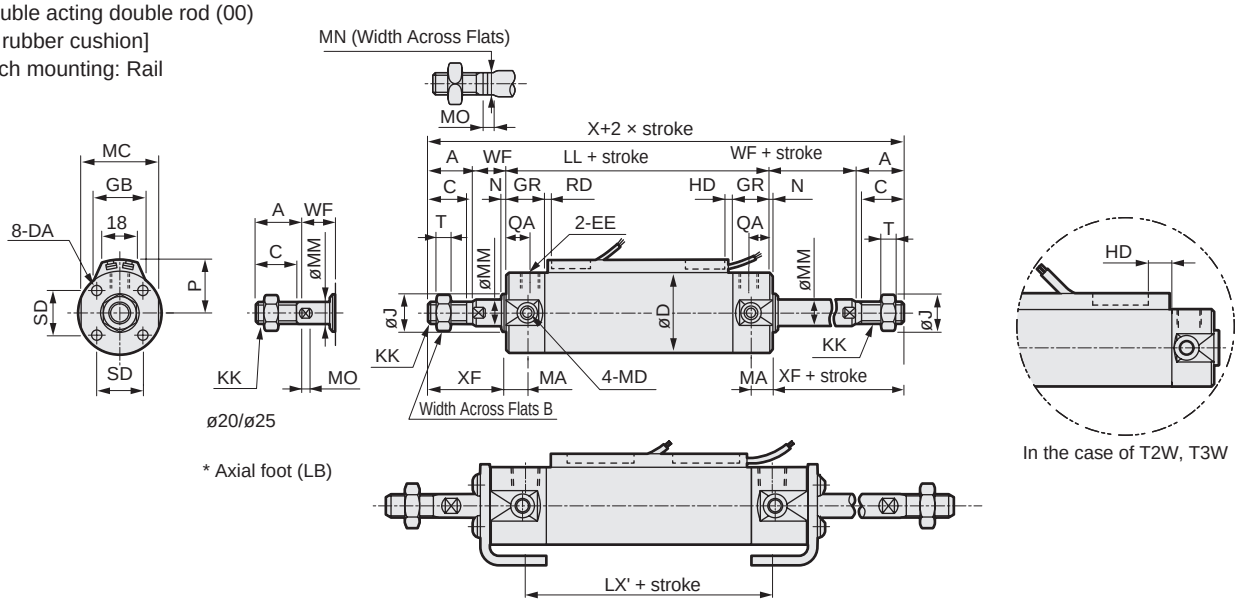

With bellows on both sides

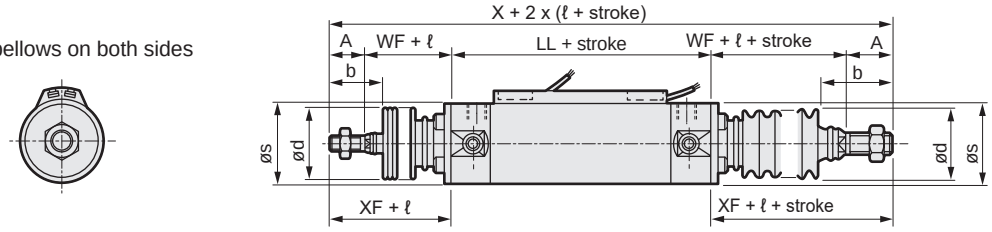

[With air cushion]
• Switch mounting: Rail

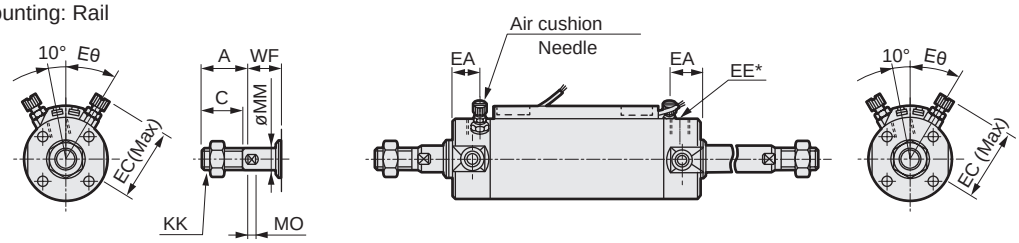

1: Piping port (EE) of ø20 and ø25 is different. Refer to the dimensions (EE) of the type with air cushion.
***2: Needle relational dimensions of the type with air cushion are the same as those of the double acting. Refer to pages 238 and 239.**
*3: The positions for the left and right width across flats are unspecified.
***4: Refer to page 345 for RD, HD and protruding dimensions of the 2-color LED, off-delay, AC magnetic field proof, T1H/V and T8H/V switches.**
***5: For the dimensions of the accessories, refer to pages 252 and 253.**

Code	Basic (00) Basic dimensions																	
Bore size (mm)	A	B	C	D	DA	EE (Note)	GR	J	KK	LL	MA	MC	MD	MM	MN	MO	N	QA	SD
ø20	18	13	16	26	M4 depth 6.5	Rc1/8	19	12	M8	71	11	24	M5	8	6	4	2	12	14
ø25	22	17	20	31	M5 depth 6.5	Rc1/8	19	14	M 10 x 1.25	71	11	29	M6	10	8	5	2	12	16.5
ø32	22	17	20	38	M5 depth 7.5	Rc1/8	19	18	M 10 x 1.25	73	11	36	M8	12	10	5.5	2	12	20
ø40	30	22	27	47	M6 depth 12	Rc1/8	20	25	M 14 x 1.5	79	12	44	M10	16	14	6	2	13	26
ø50	35	27	32	58	M8 depth 16	Rc1/4	25	30	M 18 x 1.5	93	13	55	M12	20	17	8	2	15	32
ø63	35	27	32	72	M10 depth 16	Rc1/4	25	32	M 18 x 1.5	93	13	69	M14	20	17	8	2	15	38
ø80	40	32	37	89	M10 depth 22	Rc3/8	28	40	M 22 x 1.5	108	-	80	-	25	22	11	3	15	50
ø100	40	41	37	110	M12 depth 22	Rc1/2	28	50	M 26 x 1.5	108	-	100	-	30	27	13	3	15	60

Code						With bellows				With air cushion				Switch mounting: Rail								
																HD			RD			
Bore size (mm)	T	WF	X	XF	LX'	b	d	s	ℓ	EA	EC	EE*	Eθ	P	GB	T0/T5	T2/T2R T3/T3P	T2W T3W	T0/T5	T2/T2R T3/T3P	T2W T3W
ø20	5	17	141	35	47.2	30	30	25.7	(stroke/3) + 18.5	14	27	M5	30°	19.5	23	3.0	6.5	8.5	7.5	7.5	9.5
ø25	6	18	151	40	47.2	35	30	30.7	(stroke/3) + 20.5	14	29.5	M5	30°	22	24.4	2.0	5.5	7.5	8.5	8.5	10.5
ø32	6	18	153	40	47.2	31.5	35	37.7	(stroke/3) + 19	14	32.8	Rc1/8	25°	25.5	25	3.0	6.5	8.5	9.5	9.5	11.5
ø40	8	20	179	50	52.2	40	35	46.7	(stroke/3) + 18.5	15	36.6	Rc1/8	20°	30	25.7	5.0	8.5	10.5	11.5	11.5	13.5
ø50	11	23	209	58	58	46	40	57.7	(stroke/3.6) + 18.5	18.5	43	Rc1/4	20°	35.5	26.2	7.5	11.0	13.0	13.0	13.0	15.0
ø63	11	23	209	58	58	46	40	71.7	(stroke/3.6) + 18.5	18.5	50	Rc1/4	20°	42.5	26.5	7.5	11.0	13.0	13.0	13.0	15.0
ø80	13	31	250	71	60	55	50	88.7	(stroke/4.3) + 14.5	20	58.5	Rc3/8	20°	51	26.7	9.5	13.0	15.0	20.0	20.0	22.0
ø100	16	31	250	71	60	56	60	109.7	(stroke/4.5) + 21	20	69	Rc1/2	20°	61.5	26.7	10.0	13.5	15.5	19.5	19.5	21.5

Note: Installation dimensions of the mounting types are the same as those of SCM (double acting). Refer to pages 240 to 251. For axial foot (LB), refer to the figure above.

Dimensions

● Double acting double rod
[With rubber cushion]
· Switch mounting: Band

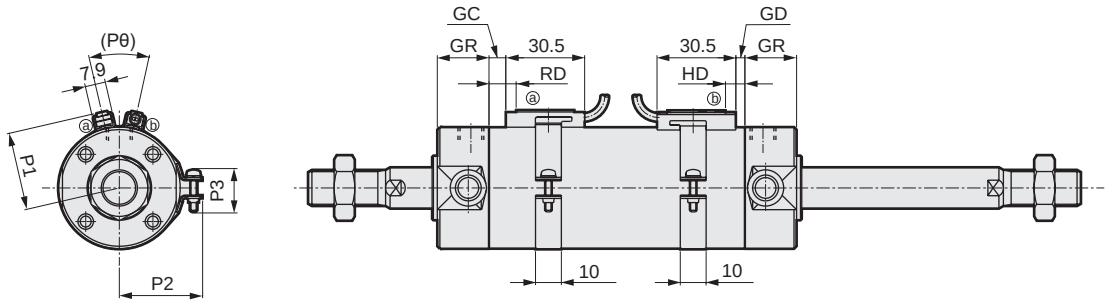

[With air cushion]
· Switch mounting: Band

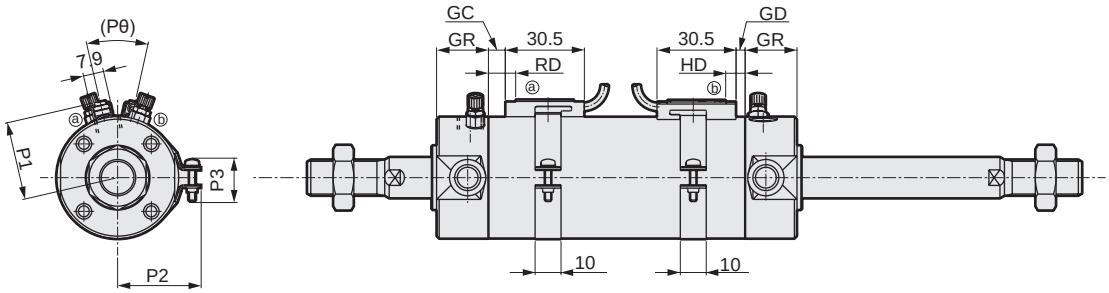

*1 : Needle relational dimensions of the type with air cushion are the same as those of the double acting. Refer to pages 238 and 239.
*2 : The positions for the left and right widths across flats are unspecified.
*3 : Refer to page 345 for RD, HD and protruding dimensions of the 2-color LED, off-delay, AC magnetic field proof, T1H/V and T8H/V switches.

Code	Switch mounting: Band																
Bore size (mm)	GC			GD			GR	HD			RD			P1	P2	P3	Pθ
	T0/T5	T2, T3	T2W T3W	T0/T5	T2, T3	T2W T3W		T0/T5	T2, T3	T2W T3W	T0/T5	T2, T3	T2W T3W				
ø20	3.5	3.5	5.5	2.5	2.5	4.5	19	6.5	6.5	8.5	7.5	7.5	9.5	19.6	21.5	14	(38°)
ø25	4.5	4.5	6.5	1.5	1.5	3.5	19	5.5	5.5	7.5	8.5	8.5	10.5	22.1	23.9	14	(34°)
ø32	5.5	5.5	7.5	2.5	2.5	4.5	19	6.5	6.5	8.5	9.5	9.5	11.5	25.6	27.6	16	(30°)
ø40	7.5	7.5	9.5	4.5	4.5	6.5	20	8.5	8.5	10.5	11.5	11.5	13.5	30.2	32.1	16	(26°)
ø50	9.0	9.0	11.0	7.0	7.0	9.0	25	11.0	11.0	13.0	13.0	13.0	15.0	35.7	37.4	16	(22°)
ø63	9.0	9.0	11.0	7.0	7.0	9.0	25	11.0	11.0	13.0	13.0	13.0	15.0	42.7	44.4	16	(20°)
ø80	16.0	16.0	18.0	9.0	9.0	11.0	28	13.0	13.0	15.0	20.0	20.0	22.0	51.2	53.0	16	(16°)
ø100	15.5	15.5	17.5	9.5	9.5	11.5	28	13.5	13.5	15.5	19.5	19.5	21.5	61.7	63.5	16	(16°)

* For the dimensions of the accessories, refer to pages 252 and 253.

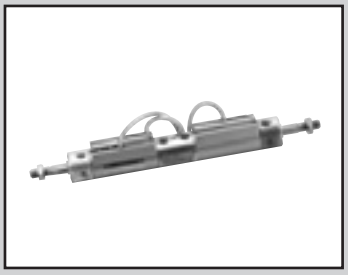

Round shaped cylinder
Double acting/back to back

SCM-B Series

● Bore size:ø20/ø25/ø32/ø40/ø50/ø63

JIS symbol

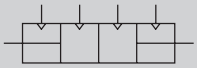

RoHS CAD

Specifications

Item	SCM-B					
Bore size mm	ø20	ø25	ø32	ø40	ø50	ø63
Actuation	Double acting/back to back					
Working fluid	Compressed air					
Max. working pressure MPa	1.0 (≈150 psi, 10 bar)					
Min. working pressure MPa	0.1 (≈15 psi, 1 bar)				0.05 (≈7.3 psi, 0.5 bar)	
Proof pressure MPa	1.6 (≈230 psi, 16 bar)					
Ambient temperature °C	-10 (14°F) to 60 (140°F) (no freezing)					
Port size	Rc1/8				Rc1/4	
Stroke tolerance mm	$^{+1.4}_{0}$ (to 500)			$^{+1.4}_{0}$ (to 750)	$^{+2.3}_{0}$ (to 750)	
Working piston speed mm/s	30 to 1000 (Operate within the allowable absorbed energy.)					
Cushion	Rubber cushion					
Lubrication	Not required (use turbine oil ISO VG32 if necessary for lubrication)					
Allowable absorbed energy J	0.1	0.2	0.5	0.9	1.6	1.6

Stroke

Bore size (mm)	Standard stroke (mm)	Max. stroke (mm)	Min. stroke (mm)
ø20	25, 50, 75 100, 125, 150 200, 250, 300	500	10
ø25			
ø32			
ø40		750	
ø50			
ø63			

*1: The custom stroke is available in 1 mm increments.

Number of installed switches and min. stroke (mm)

● Switch mounting: Rail

Switch quantity	1				2				3				4				5			
Bore size (mm)	Proximity			Reed	Proximity			Reed	Proximity			Reed	Proximity			Reed	Proximity			Reed
	T2, T3	T2W, T3W	T*Y*		T2, T3	T2W, T3W	T*Y*		T2, T3	T2W, T3W	T*Y*		T2, T3	T2W, T3W	T*Y*		T2, T3	T2W, T3W	T*Y*	
ø20	10				25				50	70	70	55	55	70	70	55	75	110	110	90
ø25	10				25				50	70	70	55	55	70	70	55	75	110	110	90
ø32	10				25				50	70	70	55	55	70	70	55	75	110	110	90
ø40	10				25				50	70	70	55	55	70	70	55	75	110	110	90
ø50	10				25				50	65	65	55	55	65	65	55	75	110	110	90
ø63	10				25				50	65	65	55	55	65	65	55	75	110	110	90

● Switch mounting: Band

Switch quantity	1				2				3				4				5			
Bore size (mm)	Proximity			Reed	Proximity			Reed	Proximity			Reed	Proximity			Reed	Proximity			Reed
	T2, T3	T2W, T3W	T*Y*		T2, T3	T2W, T3W	T*Y*		T2, T3	T2W, T3W	T*Y*		T2, T3	T2W, T3W	T*Y*		T2, T3	T2W, T3W	T*Y*	
ø20	10				25	30	35	25	50	55	55	50	75	75	80	70	95	100	100	95
ø25	10				25	30	35	25	50	55	55	50	75	75	80	70	95	100	100	95
ø32	10				25	30	35	25	50	55	55	50	75	75	80	70	95	100	100	95
ø40	10				25	30	35	25	50	55	55	50	75	75	80	70	95	100	100	95
ø50	10				25	30	35	25	50	55	55	50	75	75	80	70	95	100	100	95
ø63	10				25	30	35	25	50	55	55	50	75	75	80	70	95	100	100	95

*1: For types with one switch, when the stroke is between 10 and 24 mm, the trunnion mounting is not available since the switch rail mounting position is different. Refer to page 345 for mounting position.

Switch specifications

● 1-color/2-color LED

Item	2-wire proximity				3-wire proximity				2-wire reed							2-wire proximity
	T1H/ T1V	T2H/T2V/ T2JH/T2JV	T2YH/ T2YV	T2WH/ T2WV	T3H/ T3V	T3PH/ T3PV	T3YH/ T3YV	T3WH/ T3WV	T0H/T0V		T5H/T5V		T8H/T8V			T2YD (*4) T2YDT
Applications	For programming controller, relay, compact solenoid valve	Dedicated for programmable controller			For programmable controller, relay				For programmable controller, relay		For programmable controller, relay (no lamp), serial		For programmable controller, relay			Dedicated for programmable controller
Output method	-				NPN output	PNP output	NPN output	NPN output	-							
Pwr. supp. V.	-				10 to 28 VDC				-							
Load voltage	85 to 265 VAC	10 to 30 VDC		24 VDC ±10%	30 VDC or less				12/24 VDC	100/110 VAC	5/12/24 VDC	100/110 VAC	12/24 VDC	110 VAC	220 VAC	24 VDC ±10%
Load current	5 to 100 mA	5 to 20 mA (*3)			100 mA or less		50 mA or less		5 to 50 mA	7 to 20 mA	50 mA or less	20 mA or less	5 to 50 mA	7 to 20 mA	7 to 10 mA	5 to 20 mA
Indicator	LED (Lit when ON)	LED (Lit when ON)	Red/green LED (Lit when ON)	Red/green LED (Lit when ON)	LED (Lit when ON)	Yellow LED (Lit when ON)	Red/green LED (Lit when ON)	Red/green LED (Lit when ON)	LED (Lit when ON)		No indicator lamp		LED (Lit when ON)			Red/green LED (Lit when ON)
Leakage current	≤ 1 mA at 100 VAC, ≤ 2 mA at 200 VAC	1 mA or less			10 μA or less				0 mA							1 mA or less
Weight g	1 m:33 3 m:87 5 m:142	1 m:18 3 m:49 5 m:80	1 m:33 3 m:87 5 m:142	1 m:18 3 m:49 5 m:80	1 m:18 3 m:49 5 m:80		1 m:33 3 m:87 5 m:142	1 m:18 3 m:49 5 m:80	1 m:18 3 m:49 5 m:80				1 m:33 3 m:87 5 m:142			1 m:61 3 m:166 5 m:272

*1: Refer to Ending Page 1 for detailed switch specifications and dimensions.
*2: Switches other than the above models, such as switches with connectors, are also available. Refer to Ending Page 1.
*3: Max. load current: 20 mA at 25°C. The current is lower than 20 mA if the operating ambient temperature around the switch is higher than 25°C. (5 to 10 mA at 60°C)
*4: Switch for AC magnetic field (T2YD/T2YDT) cannot be used in DC magnetic field.

Cylinder weight

(Unit: kg)

Item/mounting / Bore size (mm)	Weight when stroke (S) = 0 mm	Additional weight				Switch weight (per 1 pc)	Additional weight per S = 10 mm	Additional weight per S = 10 mm (With switch rail)	Band weight per switch
	Basic (00)	Basic	Axial foot	Flange	Trunnion				
ø20	0.10	0.00	0.11	0.03	0.01	Refer to the weight in the switch specifications.	0.01	0.012	0.007
ø25	0.17	0.00	0.13	0.04	0.02		0.014	0.016	0.007
ø32	0.26	0.02	0.18	0.08	0.05		0.018	0.02	0.007
ø40	0.41	0.05	0.27	0.13	0.10		0.03	0.032	0.007
ø50	0.77	0.07	0.55	0.41	0.21		0.044	0.046	0.008
ø63	1.07	0.11	0.83	0.61	0.25		0.052	0.054	0.009

(Example) Product weight of
SCM-B-LB-40D-25-T2H-D-D50-T2H-R

[S1 weight]
Product weight when S = 0 mm·····0.41 kg
Additional weight when S = 25mm·····$0.032 \times \frac{25}{10}$=0.08 kg
Weight of 2 switches ·····0.036 kg
S1 weight ·····0.41 kg+0.08 kg+0.036 kg=0.526 kg

[S2 weight]
Product weight when S = 0 mm···0.41 kg
Additional weight when S = 50mm···$0.032 \times \frac{25}{10}$=0.16 kg
Weight of 1 switches ·····0.018 kg
S2 weight ·····0.63 kg+0.16 kg+0.018 kg=0.588 kg
Product weight (S1 weight + S2 weight + additional weight)···0.526 kg+0.588 kg+0.27 kg=1.384 kg

Theoretical thrust table

(Unit: N)

Bore size (mm)	Operating direction	Working pressure MPa											
		0.05	0.1	0.15	0.2	0.3	0.4	0.5	0.6	0.7	0.8	0.9	1.0
ø20	Push	–	31.4	47.1	62.8	94.2	1.26×10^2	1.57×10^2	1.88×10^2	2.20×10^2	2.51×10^2	2.83×10^2	3.14×10^2
	Pull	–	26.4	39.6	52.8	79.2	1.06×10^2	1.32×10^2	1.58×10^2	1.85×10^2	2.11×10^2	2.38×10^2	2.64×10^2
ø25	Push	–	49.1	73.6	98.2	1.47×10^2	1.96×10^2	2.45×10^2	2.95×10^2	3.44×10^2	3.93×10^2	4.42×10^2	4.91×10^2
	Pull	–	41.2	61.9	82.5	1.24×10^2	1.65×10^2	2.06×10^2	2.47×10^2	2.89×10^2	3.30×10^2	3.71×10^2	4.12×10^2
ø32	Push	–	80.4	1.21×10^2	1.61×10^2	2.41×10^2	3.22×10^2	4.02×10^2	4.83×10^2	5.63×10^2	6.43×10^2	7.24×10^2	8.04×10^2
	Pull	–	69.1	1.04×10^2	1.38×10^2	2.07×10^2	2.76×10^2	3.46×10^2	4.15×10^2	4.84×10^2	5.53×10^2	6.22×10^2	6.91×10^2
ø40	Push	–	1.26×10^2	1.88×10^2	2.51×10^2	3.77×10^2	5.03×10^2	6.28×10^2	7.54×10^2	8.80×10^2	1.01×10^3	1.13×10^3	1.26×10^3
	Pull	–	1.06×10^2	1.58×10^2	2.11×10^2	3.17×10^2	4.22×10^2	5.28×10^2	6.33×10^2	7.39×10^2	8.44×10^2	9.50×10^2	1.06×10^3
ø50	Push	98.0	1.96×10^2	2.95×10^2	3.93×10^2	5.89×10^2	7.85×10^2	9.82×10^2	1.18×10^3	1.37×10^3	1.57×10^3	1.77×10^3	1.96×10^3
	Pull	82.5	1.65×10^2	2.47×10^2	3.30×10^2	4.95×10^2	6.60×10^2	8.25×10^2	9.90×10^2	1.15×10^3	1.32×10^3	1.48×10^3	1.65×10^3
ø63	Push	1.56×10^2	3.12×10^2	4.68×10^2	6.23×10^2	9.35×10^2	1.25×10^3	1.56×10^3	1.87×10^3	2.18×10^3	2.49×10^3	2.81×10^3	3.12×10^3
	Pull	2.40×10^2	2.80×10^2	4.20×10^2	5.61×10^2	8.41×10^2	1.12×10^3	1.40×10^3	1.68×10^3	1.96×10^3	2.24×10^3	2.52×10^3	2.80×10^3

SCP*3
CMK2
CMA2
SCM
SCG
SCA2
SCS2
CKV2
CAV2/ COVP/N2
SSD2
SSG
SSD
CAT
MDC2
MVC
SMG
MSD/ MSDG
FC*
STK
SRL3
SRG3
SRM3
SRT3
MRL2
MRG2
SM-25
ShkAbs
FJ
FK
Spd Contr
Ending

How to order

No switch (built-in magnet for switch)

SCM-B - LB - 40 - ○ D 25 —— ○ D 50 —— J Y

(Cylinder 1 stroke: S_1; Cylinder 2 stroke: S_2)

With switch (built-in magnet for switch)

SCM-B - LB - 40 - ○ D 25 - T0H - D - ○ D 50 - T0H - R - ○ J Y

(Cylinder 1: D 25 - T0H - D; Cylinder 2: D 50 - T0H - R)

Ⓐ Mounting *1

Ⓑ Bore size

Ⓒ Port thread

Ⓓ Cushion

Ⓔ Stroke =S1

Ⓔ Stroke =S2

Ⓕ Switch model No. *4 *3

Ⓖ Switch quantity

Ⓗ Switch mounting

Ⓘ Option *2 *6 *8

Ⓙ Accessory

Cylinder 1 stroke	25 mm	(S1)
+ Cylinder 2 stroke	50 mm	(S2)
Total stroke	75 mm	S1 + S2

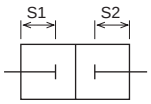

Precautions for model No. selection

*1 : Mounting bracket will be shipped with the product.
*2 : If the product is supplied with bellows and the mounting bracket is LB, FA, or TA, it will be shipped assembled.
*3 : Refer to page 316 for the number of installed switches and the min. stroke.
*4 : Switches other than Ⓕ Switch model No. are also available. (Made to order) Refer to Ending Page 1 for details.
*5 : T8H/V switches cannot be mounted when the bore size is from ø20 to ø40 and the switch mounting style is the rail.
*6 : The instantaneous max. temperature is the temperature when sparks, cutting chips, etc., instantaneously contact the bellows.
*7 : Refer to Ending Page 85 for custom specifications of rod end form.
*8 : "Q" (switch rail enclosed at shipment) is not available for the "Z" switch mounting.
*9 : Switches are shipped with the product. Contact CKD if assembling before shipment is necessary.

[Example of model No.]

SCM-B-LB-40-D25-T0H-D-D50-T0H-R-JY

Model: Round shaped cylinder, double acting/back to back

Ⓐ Mounting	: Axial foot	
Ⓑ Bore size	: ø40 mm	
Ⓒ Port thread	: Rc thread	
Ⓓ Cushion	: With two-sided rubber cushion	Cylinder 1
Ⓔ Stroke	: S1=25 mm	Cylinder 1
Ⓓ Cushion	: With two-sided rubber cushion	Cylinder 2
Ⓔ Stroke	: S2=50 mm	Cylinder 2
Ⓕ Switch model No.	: Reed T0H switch, Lead wire 1 m	
Ⓖ Switch quantity	: Cylinder 1; 2 pieces included, Cylinder 2; 1 on rod side	
Ⓗ Switch mounting	: Rail	
Ⓘ Option	: Bellows material for max. ambient temperature 100°C	
Ⓙ Accessory	: Rod clevis	

Code	Description
Ⓐ Mounting	
00	Basic
LB	Axial foot
FA	Cylinder 1 side flange
FB	Cylinder 2 side flange
TA	Cylinder 1 side trunnion
TB	Cylinder 2 side trunnion

Ⓑ Bore size (mm)

20	ø20
25	ø25
32	ø32
40	ø40
50	ø50
63	ø63

Ⓒ Port thread

Blank	Rc thread
N	NPT thread (made-to-order product)
G	G thread (made-to-order product)

Ⓓ Cushion

D	With two-sided rubber cushion

Ⓔ Stroke (mm)

Bore size	Stroke *2	Custom stroke
ø20 to ø32	10 to 500	In 1 mm increments
ø40 to ø63	10 to 750	

Ⓕ Switch model No.

Axial lead wire	Radial lead wire	Contact	Voltage AC	Voltage DC	Indicator	Lead wire
T0H*	T0V*	Reed	●	●	1-color LED	2-wire
T5H*	T5V*	Reed	●	●	No indicator lamp	2-wire
T8H*	T8V*	Reed	●	●	1-color LED	2-wire
T1H*	T1V*	Proximity	●		1-color LED	2-wire
T2H*	T2V*	Proximity		●	1-color LED	2-wire
T3H*	T3V*	Proximity		●	1-color LED	3-wire
T3PH*	T3PV*	Proximity		●	1-color LED	3-wire
T2WH*	T2WV*	Proximity		●	2-color LED	2-wire
T2YH*	T2YV*	Proximity		●	2-color LED	2-wire
T3WH*	T3WV*	Proximity		●	2-color LED	3-wire
T3YH*	T3YV*	Proximity		●	2-color LED	3-wire
T2YD*	-	Proximity		●	2-color LED AC magnetic field	2-wire
T2YDT*	-	Proximity		●	2-color LED AC magnetic field	2-wire
T2JH*	T2JV*	Proximity		●	1-color LED off-delay	2-wire

*** Lead wire length**

Blank	1 m (standard)
3	3 m (option)
5	5 m (option)

Ⓖ Switch quantity

R	1 on rod side
H	1 on head side
D	2
T	3
4	4 (If > 4 switches, indicate switch quantity.)

Ⓗ Switch mounting

Blank	Rail method
Z	Band method

Ⓘ Option

		Max. ambient temp.	Instantaneous max. temp.
J	Bellows	100°C	200°C
L	Bellows	250°C	400°C
Q	Switch rail included at shipment		
M	Piston rod material (stainless steel)		
P6	Copper and PTFE free		

Ⓙ Accessory

I	Rod eye
Y	Rod clevis (pin and snap ring included)
B2	Clevis bracket

How to order switch

[Switch mounting: Rail]

● Switch body + mounting rail set

SCM - T0H - D - 40 - 100

- T0H: Switch model No. (Item Ⓕ on page 318)
- D: Switch quantity (Item Ⓖ on page 318)
- 40: Bore size (Item Ⓑ on page 318)
- 100: Stroke (*1) (Item Ⓔ on page 318)

[Switch mounting: Band]

● Switch body + mounting bracket set + band

SCM - T2H* - 40 - Z

- T2H*: Switch model No. (Item Ⓕ on page 318)
- 40: Bore size (Item Ⓑ on page 318)

● Mounting rail only

SCM - T - 40 - 100

- T: Mounting rail
- 40: Bore size (Item Ⓑ on page 318)
- 100: Stroke (*2) (*1) (Item Ⓔ on page 318)

● Mounting bracket set + band

SCM - Z - 40

- 40: Bore size (Item Ⓑ on page 318)

*1: Indicate X if the stroke exceeds 300 mm.
If exceeding 300 mm, a short rail (with 100 mm switch adjustment length) will be included per switch.
*2: If indicating X when ordering mounting rails only, order the same number of rails as that of applicable switches.

[Switch body only]

SW - T0H

- T0H: Switch model No. (Item Ⓕ on page 318)

How to order mounting bracket

Bore size (mm) / Mounting bracket	ø20	ø25	ø32	ø40	ø50	ø63
Foot (LB)	SCM-LB-20	SCM-LB-25	SCM-LB-32	SCM-LB-40	SCM-LB-50	SCM-LB-63
Flange (FA)	SCM-FA-20	SCM-FA-25	SCM-FA-32	SCM-FA-40	SCM-FA-50	SCM-FA-63
Trunnion (TA)	SCM-TA-20	SCM-TA-25	SCM-TA-32	SCM-TA-40	SCM-TA-50	SCM-TA-63

*1: All mounting brackets are supplied with mounting bolts.
*2: The foot mounting bracket is provided as 2 pcs./set.

Applications

When the same strokes are combined,
3 positions possible.

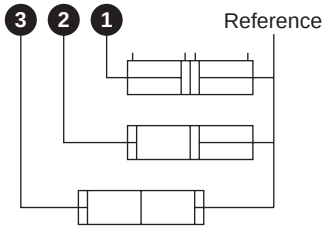

When different strokes are combined,
4 positions possible.

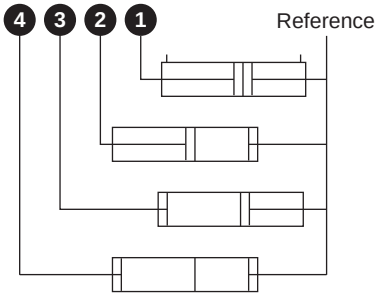

Internal structure and parts list

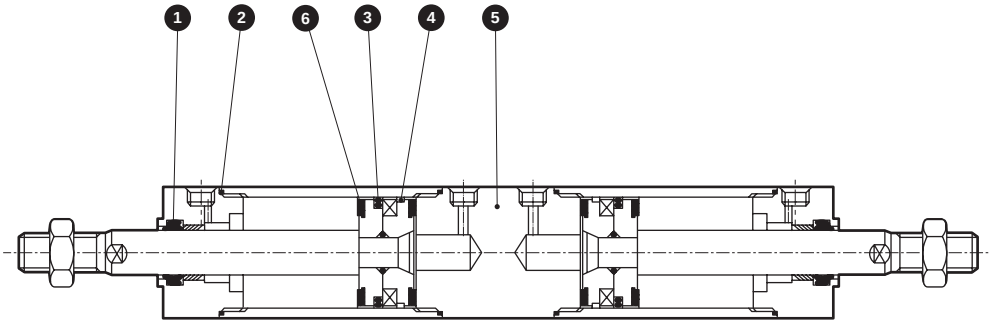

No.	Part name	Material	Remarks	No.	Part name	Material	Remarks
1	Rod packing	Nitrile rubber		4	Wear ring	Polyacetal resin	
2	Cylinder gasket	Nitrile rubber		5	Intermediate cover	Aluminum alloy	Hard alumite
3	Piston packing	Nitrile rubber		6	Cushion rubber	Urethane rubber	

Parts other than the above are the same as the double acting.

Repair parts list

Bore size (mm)	Kit No.	Repair parts No.
ø20	SCM-B-20DK	1 2 3 4 6
ø25	SCM-B-25DK	
ø32	SCM-B-32DK	
ø40	SCM-B-40DK	
ø50	SCM-B-50DK	
ø63	SCM-B-63DK	

dimensions

● Double acting back to back

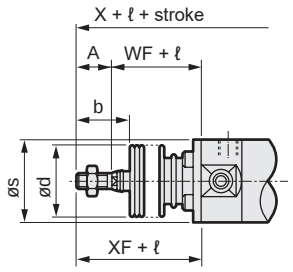

With bellows

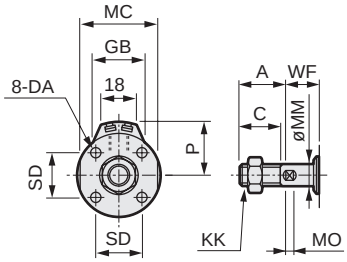

ø20/ø25

• Switch mounting: Rail

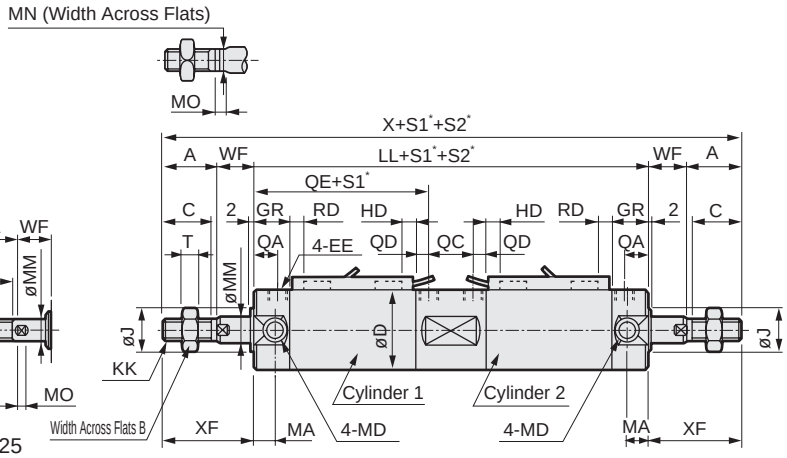

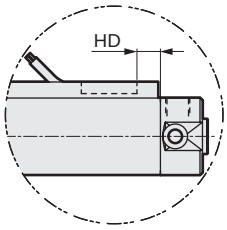

In the case of T2W, T3W

• Switch mounting: Band

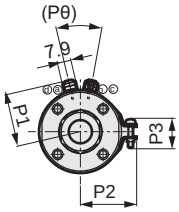

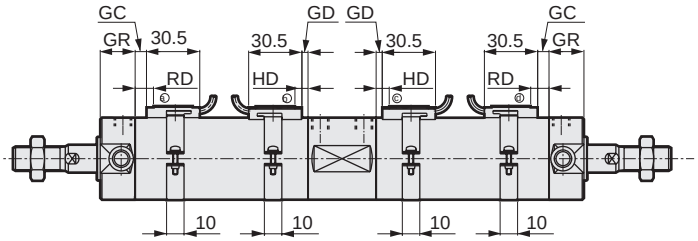

***1: Refer to page 345 for RD, HD and protruding dimensions of the 2-color LED, off-delay, AC magnetic field proof, T1H/V and T8H/V switches.**

* S1 = Cylinder 1 stroke, S2 = Cylinder 2 stroke

Code	Basic (00) Basic dimensions																	
Bore size (mm)	A	B	C	D	DA	EE	GR	J	KK	LL	MA	MC	MD	MM	MN	MO	QA	QC
ø20	18	13	16	26	M4 depth 6.5	Rc1/8	19	12	M8	137	11	24	M5	8	6	4	12	19
ø25	22	17	20	31	M5 depth 6.5	Rc1/8	19	14	M 10 x 1.25	137	11	29	M6	10	8	5	12	19
ø32	22	17	20	38	M5 depth 7.5	Rc1/8	19	18	M 10 x 1.25	143	11	36	M8	12	10	5.5	12	21
ø40	30	22	27	47	M6 depth 12	Rc1/8	20	25	M 14 x 1.5	157	12	44	M10	16	14	6	13	25
ø50	35	27	32	58	M8 depth 16	Rc1/4	25	30	M 18 x 1.5	184	13	55	M12	20	17	8	15	28
ø63	35	27	32	72	M10 depth 16	Rc1/4	25	32	M 18 x 1.5	184	13	69	M14	20	17	8	15	28

Code								With bellows				Switch mounting: Rail							
Bore size (mm)	QD	QE	SD	T	WF	X	XF	b	d	s	ℓ	P	GB	HD			RD		
														T0/T5	T2/T2R T3/T3P	T2W T3W	T0/T5	T2/T2R T3/T3P	T2W T3W
ø20	7	59	14	5	17	207	35	30	30	25.7	(stroke/3) + 18.5	19.5	23	3.0	6.5	8.5	7.5	7.5	9.5
ø25	7	59	16.5	6	18	217	40	35	30	30.7	(stroke/3) + 20.5	22	24.4	2.0	5.5	7.5	8.5	8.5	10.5
ø32	7	61	20	6	18	223	40	31.5	35	37.7	(stroke/3) + 19	25.5	25	3.0	6.5	8.5	9.5	9.5	11.5
ø40	7	66	26	8	20	257	50	40	35	46.7	(stroke/3) + 18.5	30	25.7	5.0	8.5	10.5	11.5	11.5	13.5
ø50	10	78	32	11	23	300	58	46	40	57.7	(stroke/3.6) + 18.5	35.5	26.2	7.5	11.0	13.0	13.0	13.0	15.0
ø63	10	78	38	11	23	300	58	46	40	71.7	(stroke/3.6) + 18.5	42.5	26.5	7.5	11.0	13.0	13.0	13.0	15.0

Code	Switch mounting: Band															
Bore size (mm)	GC			GD			HD			RD			P1	P2	P3	Pθ
	T0/T5	T2,T3	T2W T3W	T0/T5	T2,T3	T2W T3W	T0/T5	T2,T3	T2W T3W	T0/T5	T2,T3	T2W T3W				
ø20	3.5	3.5	5.5	2.5	2.5	4.5	6.5	6.5	8.5	7.5	7.5	9.5	19.6	21.5	14	(38°)
ø25	4.5	4.5	6.5	1.5	1.5	3.5	5.5	5.5	7.5	8.5	8.5	10.5	22.1	23.9	14	(34°)
ø32	5.5	5.5	7.5	2.5	2.5	4.5	6.5	6.5	8.5	9.5	9.5	11.5	25.6	27.6	16	(30°)
ø40	7.5	7.5	9.5	4.5	4.5	6.5	8.5	8.5	10.5	11.5	11.5	13.5	30.2	32.1	16	(26°)
ø50	9.0	9.0	11.0	7.0	7.0	9.0	11.0	11.0	13.0	13.0	13.0	15.0	35.7	37.4	16	(22°)
ø63	9.0	9.0	11.0	7.0	7.0	9.0	11.0	11.0	13.0	13.0	13.0	15.0	42.7	44.4	16	(20°)

* Installation dimensions of the mounting are the same as those of SCM (double acting). Refer to pages 240 to 251.
* For the dimensions of the accessories, refer to pages 252 and 253.

Round shaped cylinder
Double acting/2-stage

SCM-W Series

● Bore size:ø20/ø25/ø32/ø40/ø50/ø63

RoHS CAD

Specifications

Item		SCM-W					
Bore size	mm	ø20	ø25	ø32	ø40	ø50	ø63
Actuation		Double acting/2-stage					
Working fluid		Compressed air					
Max. working pressure	MPa	1.0 (≈150 psi, 10 bar) (*1)					
Min. working pressure	MPa	0.2 (≈29 psi, 2 bar)				0.1 (≈15 psi, 1 bar)	
Proof pressure	MPa	1.6 (≈230 psi, 16 bar)					
Ambient temperature	°C	-10 (14°F) to 60 (140°F) (no freezing)					
Port size		Rc1/8				Rc1/4	
Stroke tolerance mm	S1	±1.4				±2.3	
	S2	+1.4 0				+2.3 0	
Working piston speed	mm/s	50 to 1000 (Operate within the allowable absorbed energy.)					
Cushion		Rubber cushion					
Lubrication		Not required (use turbine oil ISO VG32 if necessary for lubrication)					
Allowable absorbed energy	J	0.1	0.2	0.5	0.9	1.6	1.6

*1: Max. working pressure is 0.5 MPa when S1 and S2 are the same value.

Stroke

Bore size (mm)	Standard stroke (mm)	Max. stroke (mm)	Min. stroke (mm)
ø20	25, 50, 75 100, 125, 150 200, 250, 300	600	10
ø25			
ø32			
ø40			
ø50			
ø63			

*1: The custom stroke is available in 1 mm increments.
*2: The max. stroke of S2 is 200 mm.

Number of installed switches and min. stroke (mm)

● Switch mounting: Rail

Switch quantity / Bore size (mm)	1				2				3				4				5			
	Proximity			Reed	Proximity			Reed	Proximity			Reed	Proximity			Reed	Proximity			Reed
	T2, T3	T2W, T3W	T*Y*		T2, T3	T2W, T3W	T*Y*		T2, T3	T2W, T3W	T*Y*		T2, T3	T2W, T3W	T*Y*		T2, T3	T2W, T3W	T*Y*	
ø20	10				25				50	70	70	55	55	70	70	55	75	110	110	90
ø25	10				25				50	70	70	55	55	70	70	55	75	110	110	90
ø32	10				25				50	70	70	55	55	70	70	55	75	110	110	90
ø40	10				25				50	70	70	55	55	70	70	55	75	110	110	90
ø50	10				25				50	65	65	55	55	65	65	55	75	110	110	90
ø63	10				25				50	65	65	55	55	65	65	55	75	110	110	90

● Switch mounting: Band

Switch quantity / Bore size (mm)	1				2				3				4				5			
	Proximity			Reed	Proximity			Reed	Proximity			Reed	Proximity			Reed	Proximity			Reed
	T2, T3	T2W, T3W	T*Y*		T2, T3	T2W, T3W	T*Y*		T2, T3	T2W, T3W	T*Y*		T2, T3	T2W, T3W	T*Y*		T2, T3	T2W, T3W	T*Y*	
ø20	10				25	30	35	25	50	55	55	50	75	75	80	70	95	100	100	95
ø25	10				25	30	35	25	50	55	55	50	75	75	80	70	95	100	100	95
ø32	10				25	30	35	25	50	55	55	50	75	75	80	70	95	100	100	95
ø40	10				25	30	35	25	50	55	55	50	75	75	80	70	95	100	100	95
ø50	10				25	30	35	25	50	55	55	50	75	75	80	70	95	100	100	95
ø63	10				25	30	35	25	50	55	55	50	75	75	80	70	95	100	100	95

*1: For types with one switch, when the stroke is between 10 and 24 mm, the trunnion mounting is not available since the switch rail mounting position is different. Refer to page 345 for mounting position.

Switch specifications

● 1-color/2-color LED

Item	2-wire proximity				3-wire proximity				2-wire reed							2-wire proximity
	T1H/ T1V	T2H/T2V/ T2JH/T2JV	T2YH/ T2YV	T2WH/ T2WV	T3H/ T3V	T3PH/ T3PV	T3YH/ T3YV	T3WH/ T3WV	T0H/T0V		T5H/T5V		T8H/T8V			T2YD (*4) T2YDT
Applications	For programming controller, relay, compact solenoid valve	Dedicated for programmable controller			For programmable controller, relay				For programmable controller, relay		For programmable controller, relay (no lamp), serial		For programmable controller, relay			Dedicated for programmable controller
Output method	-				NPN output	PNP output	NPN output	NPN output	-							
Pwr. supp. V.	-				10 to 28 VDC				-							
Load voltage	85 to 265 VAC	10 to 30 VDC		24 VDC ±10%	30 VDC or less				12/24 VDC	100/110 VAC	5/12/24 VDC	100/110 VAC	12/24 VDC	110 VAC	220 VAC	24 VDC ±10%
Load current	5 to 100 mA	5 to 20 mA (*3)			100 mA or less		50 mA or less		5 to 50 mA	7 to 20 mA	50 mA or less	20 mA or less	5 to 50 mA	7 to 20 mA	7 to 10 mA	5 to 20 mA
Indicator	LED (Lit when ON)	LED (Lit when ON)	Red/green LED (Lit when ON)	Red/green LED (Lit when ON)	LED (Lit when ON)	Yellow LED (Lit when ON)	Red/green LED (Lit when ON)	Red/green LED (Lit when ON)	LED (Lit when ON)		No indicator lamp		LED (Lit when ON)			Red/green LED (Lit when ON)
Leakage current	≤ 1 mA at 100 VAC, ≤ 2 mA at 200 VAC	1 mA or less			10 μA or less				0 mA							1 mA or less
Weight g	1 m:33 3 m:87 5 m:142	1 m:18 3 m:49 5 m:80	1 m:33 3 m:87 5 m:142	1 m:18 3 m:49 5 m:80	1 m:18 3 m:49 5 m:80		1 m:33 3 m:87 5 m:142	1 m:18 3 m:49 5 m:80	1 m:18 3 m:49 5 m:80				1 m:33 3 m:87 5 m:142			1 m:61 3 m:166 5 m:272

*1: Refer to Ending Page 1 for detailed switch specifications and dimensions.
*2: Switches other than the above models, such as switches with connectors, are also available. Refer to Ending Page 1.
*3: Max. load current: 20 mA at 25°C. The current is lower than 20 mA if the operating ambient temperature around the switch is higher than 25°C. (5 to 10 mA at 60°C)
*4: Switch for AC magnetic field (T2YD/T2YDT) cannot be used in DC magnetic field.

Cylinder weight

(Unit: kg)

Item/mounting / Bore size (mm)	Weight when stroke (S) = 0 mm	Additional weight					Switch weight (per 1 pc)	Additional weight per S = 10 mm	Additional weight per S = 10 mm (With switch rail)	Band weight per switch
	Basic (00)	Basic	Axial foot	Flange	Clevis	Trunnion				
ø20	0.10	-0.01	0.10	0.02	0.04	0.00	Refer to the weight in the switch specifications.	0.01	0.012	0.007
ø25	0.17	-0.02	0.11	0.02	0.06	0.00		0.014	0.016	0.007
ø32	0.26	-0.01	0.15	0.05	0.14	0.02		0.018	0.02	0.007
ø40	0.41	-0.03	0.19	0.05	0.20	0.02		0.03	0.032	0.007
ø50	0.77	-0.06	0.42	0.28	0.34	0.08		0.044	0.046	0.008
ø63	1.07	-0.02	0.70	0.48	0.66	0.12		0.052	0.054	0.009

(Example) Product weight of
SCM-W-LB-40-D100-T2H-D-D25-T2H-R

[S1 weight]
Product weight when S = 0 mm ····· 0.41 kg
Additional weight when S = 100 mm ····· 0.032x $\frac{100}{10}$=0.32 kg
Weight of 2 switches ····· 0.036 kg
S1 weight ····· 0.41 kg+0.32 kg+0.036 kg=0.766 kg

[S2 weight]
Product weight when S = 0 mm ····· 0.41 kg
Additional weight when S = 25mm ····· 0.032x $\frac{25}{10}$=0.08 kg
Weight of 1 switches ····· 0.018 kg
S2 weight ····· 0.41 kg+0.08 kg+0.018 kg=0.508 kg
Product weight (S1 weight + S2 weight + additional weight) ··· 0.766 kg+0.508 kg+0.19 kg=1.464 kg

SCP*3
CMK2
CMA2
SCM
SCG
SCA2
SCS2
CKV2
CAV2/COVP/N2
SSD2
SSG
SSD
CAT
MDC2
MVC
SMG
MSD/MSDG
FC*
STK
SRL3
SRG3
SRM3
SRT3
MRL2
MRG2
SM-25
ShkAbs
FJ
FK
Spd Contr
Ending

How to order

No switch (built-in magnet for switch)

SCM-W - LB - 40 - ○ D 100 ——— ○ D 25 ——— J I

With switch (built-in magnet for switch)

SCM-W - LB - 40 - ○ D 100 - T0H - D - ○ D 25 - T0H - R - ○ J I

S1 Total stroke; S2 1st stage stroke; Cylinder; Cylinder

Ⓐ Mounting *1

Ⓑ Bore size

Ⓒ Port thread — Ⓒ Port thread

Ⓓ Cushion — Ⓓ Cushion

Ⓔ Stroke =S1 — Ⓔ Stroke = S2 *3

Ⓕ Switch model No. *5 *6 — Ⓕ Switch model No.

Ⓖ Switch quantity — Ⓖ Switch quantity

Ⓗ Switch mounting

Ⓘ Option *2 *7 *9

Ⓙ Accessory *10

1st stage stroke	25 mm (S2)
+ 2nd stage stroke	75 mm
Total stroke	100 mm (S1)

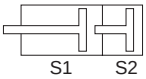

Precautions for model No. selection

*1 : Mounting bracket will be shipped with the product.
*2 : If the product is supplied with bellows and the mounting bracket is LB, FA, or TA, it will be shipped assembled.
*3 : The max. stroke of S2 (1st stage) is 200 mm.
*4 : Refer to page 322 for the number of installed switches and the min. stroke.
*5 : Switches other than Ⓕ Switch model No. are also available. (Made to order) Refer to Ending Page 1 for details.
*6 : T8H/V switches cannot be mounted when the bore size is from ø20 to ø40 and the switch mounting style is the rail.
*7 : The instantaneous max. temperature is the temperature when sparks, cutting chips, etc., instantaneously contact the bellows.
*8 : Refer to Ending Page 85 for custom specifications of rod end form.
*9 : "Q" (switch rail enclosed at shipment) is not available for the "Z" switch mounting.
*10 : "I" and "Y" cannot be selected together.
*11 : Switches are shipped with the product. Contact CKD if assembling before shipment is necessary.

Code	Description
Ⓐ Mounting	
00	Basic
LB	Axial foot
FA	Rod side flange
FB	Head side flange
CA	Eye bracket
TA	Rod side trunnion
TB	Head side trunnion

Ⓑ Bore size (mm)	
20	ø20
25	ø25
32	ø32
40	ø40
50	ø50
63	ø63

Ⓒ Port thread	
Blank	Rc thread
N	NPT thread (made-to-order product)
G	G thread (made-to-order product)

Ⓓ Cushion	
D	With two-sided rubber cushion

Ⓔ Stroke (mm)

Bore size	Stroke *3	Custom stroke
ø20 to ø63	10 to 600	In 1 mm increments

Ⓕ Switch model No.

Axial lead wire	Radial lead wire	Contact	Voltage AC	Voltage DC	Indicator	Lead wire
T0H*	T0V*	Reed	●	●	1-color LED	2-wire
T5H*	T5V*	Reed	●	●	No indicator lamp	2-wire
T8H*	T8V*	Reed	●	●	1-color LED	2-wire
T1H*	T1V*	Proximity	●		1-color LED	2-wire
T2H*	T2V*	Proximity		●	1-color LED	2-wire
T3H*	T3V*	Proximity		●	1-color LED	3-wire
T3PH*	T3PV*	Proximity		●	1-color LED	3-wire
T2WH*	T2WV*	Proximity		●	2-color LED	2-wire
T2YH*	T2YV*	Proximity		●	2-color LED	2-wire
T3WH*	T3WV*	Proximity		●	2-color LED	3-wire
T3YH*	T3YV*	Proximity		●	2-color LED	3-wire
T2YD*	-	Proximity		●	2-color LED for AC magnetic field	2-wire
T2YDT*	-	Proximity		●	2-color LED for AC magnetic field	2-wire
T2JH*	T2JV*	Proximity		●	1-color LED off-delay	2-wire

*** Lead wire length**	
Blank	1 m (standard)
3	3 m (option)
5	5 m (option)

Ⓖ Switch quantity	
R	1 on rod side
H	1 on head side
D	2
T	3
4	4 (when there are more than 4 switches, indicate switch quantity.)

Ⓗ Switch mounting	
Blank	Rail method
Z	Band method

Ⓘ Option

		Max. ambient temp.	Instantaneous max. temp.
J	Bellows	100°C	200°C
L	Bellows	250°C	400°C
Q	Switch rail included at shipment		
M	Piston rod material (stainless steel)		
P6	Copper and PTFE free		

Ⓙ Accessory	
I	Rod eye
Y	Rod clevis (pin and snap ring included)
B2	Clevis bracket

[Example of model No.]

SCM-W-LB-40-D100-T0H-D-D25-T0H-R-JI

Model: Round shaped cylinder, double acting/2-stage

Ⓐ Mounting	:	Axial foot
Ⓑ Bore size	:	ø40 mm
Ⓒ Port thread	:	Rc thread
Ⓓ Cushion	:	With two-sided rubber cushion
Ⓔ Stroke	:	S1=100 mm
Ⓓ Cushion	:	With two-sided rubber cushion
Ⓔ Stroke	:	S2=25 mm
Ⓕ Switch model No.	:	Reed T0H switch, Lead wire 1 m
Ⓖ Switch quantity	:	Cylinder 1; 2 pieces included, Cylinder 2; 1 on rod side
Ⓗ Switch mounting	:	Rail
Ⓘ Option	:	Bellows material for max. ambient temperature at 100°C
Ⓙ Accessory	:	Rod eye

How to order switch

[Switch mounting: Rail]

● Switch body + mounting rail set

SCM - T0H - D - 40 - 100

- T0H: Switch model No. (Item Ⓕ on page 324)
- D: Switch quantity (Item Ⓖ on page 324)
- 40: Bore size (Item Ⓑ on page 324)
- 100: Stroke (*1) (Item Ⓔ on page 324)

● Mounting rail only

SCM - T - 40 - 100

- T: Mounting rail
- 40: Bore size (Item Ⓑ on page 324)
- 100: Stroke (*2) (*1) (Item Ⓔ on page 324)

*1: Indicate X if the stroke exceeds 300 mm.
If exceeding 300 mm, a short rail (with 100 mm switch adjustment length) will be included per switch.
*2: If indicating X when ordering mounting rails only, order the same number of rails as that of applicable switches.

[Switch mounting: Band]

● Switch body + mounting bracket set + band

SCM - T2H* - 40 - Z

- T2H*: Switch model No. (Item Ⓕ on page 324)
- 40: Bore size (Item Ⓑ on page 324)

● Mounting bracket set + band

SCM - Z - 40

- 40: Bore size (Item Ⓑ on page 324)

[Switch body only]

SW - T0H

- T0H: Switch model No. (Item Ⓕ on page 324)

How to order mounting bracket

Bore size (mm) / Mounting bracket	ø20	ø25	ø32	ø40	ø50	ø63
Foot (LB)	SCM-LB-20	SCM-LB-25	SCM-LB-32	SCM-LB-40	SCM-LB-50	SCM-LB-63
Flange (FA/FB)	SCM-FA-20	SCM-FA-25	SCM-FA-32	SCM-FA-40	SCM-FA-50	SCM-FA-63
Eye bracket (CA)	SCM-CA-20	SCM-CA-25	SCM-CA-32	SCM-CA-40	SCM-CA-50	SCM-CA-63
Trunnion (TA/TB)	SCM-TA-20	SCM-TA-25	SCM-TA-32	SCM-TA-40	SCM-TA-50	SCM-TA-63

*1: All mounting brackets are supplied with mounting bolts.
*2: The foot mounting bracket is provided as 2 pcs./set.

SCP*3
CMK2
CMA2
SCM
SCG
SCA2
SCS2
CKV2
CAV2/COVP/N2
SSD2
SSG
SSD
CAT
MDC2
MVC
SMG
MSD/MSDG
FC*
STK
SRL3
SRG3
SRM3
SRT3
MRL2
MRG2
SM-25
ShkAbs
FJ
FK
Spd Contr
Ending

Applications

Pressure setting: P2 > P1

- 1st stage push
  Keeping port 4 pressurized, pressurize port 1.
- 2nd stage push
  Keeping port 1 pressurized, pressurize port 3.

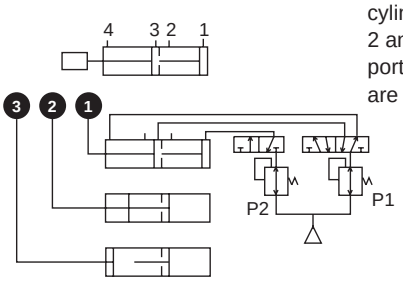

P2 = P1 is allowed depending on the load direction. When using a single acting cylinder with free fall load, ports 2 and 4 in the upper figure and ports 2 and 3 in the lower figure are breathing holes.

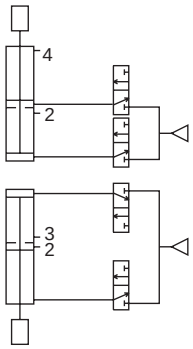

Internal structure and parts list

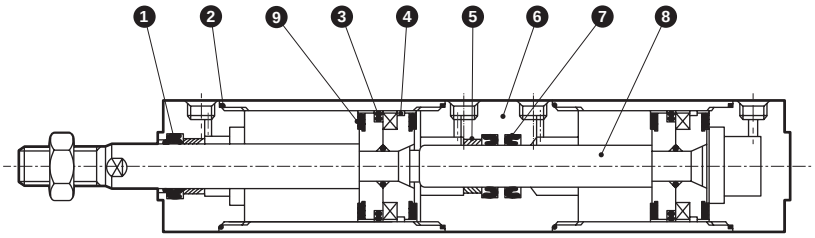

No.	Part name	Material	Remarks	No.	Part name	Material	Remarks
1	Rod packing	Nitrile rubber		6	Intermediate cover	Aluminum alloy	Hard alumite
2	Cylinder gasket	Nitrile rubber		7	Rod packing	Nitrile rubber	
3	Piston packing	Nitrile rubber		8	Piston rod	ø20 to ø25: Stainless steel ø32 to ø63: Steel	Industrial chrome plating
4	Wear ring	Polyacetal resin					
5	Bush	Oil impregnated bearing alloy		9	Cushion rubber	Urethane rubber	

Parts other than the above are the same as the double acting.

Repair parts list

Bore size (mm)	Kit No.	Repair parts No.
ø20	SCM-W-20DK	1 2 3 4 7 9
ø25	SCM-W-25DK	
ø32	SCM-W-32DK	
ø40	SCM-W-40DK	
ø50	SCM-W-50DK	
ø63	SCM-W-63DK	

*1: Specify the kit No. when placing an order.

Dimensions

● Double acting 2-stage

• Switch mounting: Rail

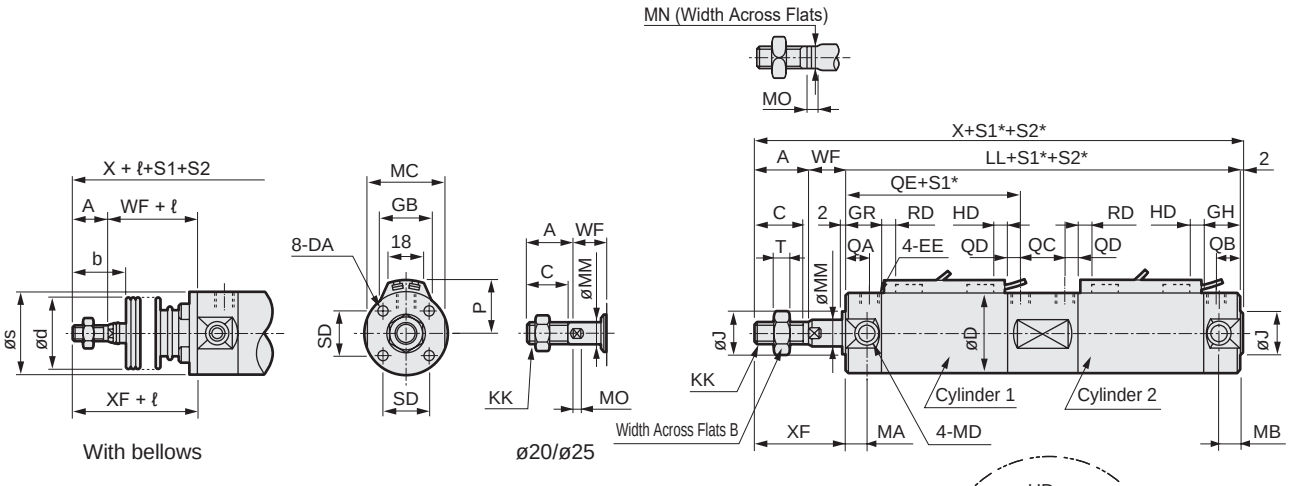

With bellows

ø20/ø25

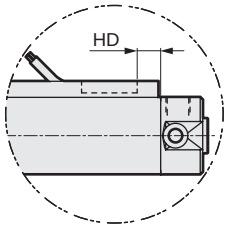

In the case of T2W, T3W

• Switch mounting: Band

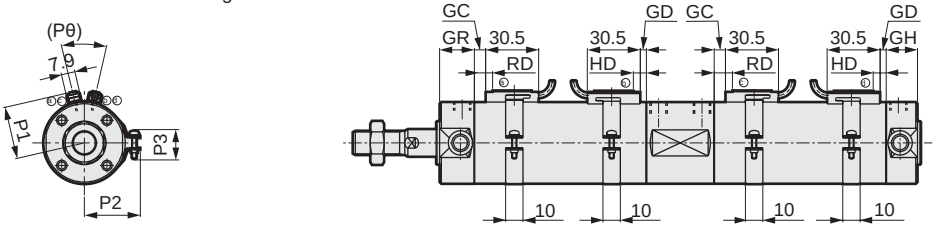

*1: Refer to page 345 for RD, HD and protruding dimensions of the 2-color LED, off-delay, AC magnetic field proof, T1H/V and T8H/V switches.

* S1 = Total stroke, S2 = Cylinder 2 stroke

Code	Basic (00) Basic dimensions																			
Bore size (mm)	A	B	C	D	DA	EE	GH	GR	J	KK	LL	MA	MB	MC	MD	MM	MN	MO	QA	QB
ø20	18	13	16	26	M4 depth 6.5	Rc1/8	17	19	12	M8	135	11	11	24	M5	8	6	4	12	10
ø25	22	17	20	31	M5 depth 6.5	Rc1/8	17	19	14	M 10 x 1.25	135	11	11	29	M6	10	8	5	12	10
ø32	22	17	20	38	M5 depth 7.5	Rc1/8	17	19	18	M 10 x 1.25	141	11	10	36	M8	12	10	5.5	12	10
ø40	30	22	27	47	M6 depth 12	Rc1/8	19	20	25	M 14 x 1.5	156	12	10	44	M10	16	14	6	13	12
ø50	35	27	32	58	M8 depth 16	Rc1/4	22	25	30	M 18 x 1.5	181	13	12	55	M12	20	17	8	15	12
ø63	35	27	32	72	M10 depth 16	Rc1/4	22	25	32	M 18 x 1.5	181	13	12	69	M14	20	17	8	15	12

Code									With bellows				Switch mounting: Rail							
Bore size (mm)	QC	QD	QE	SD	T	WF	X	XF	b	d	s	ℓ	P	GB	HD			RD		
															T0/T5	T2/T2R T3/T3P	T2W T3W	T0/T5	T2/T2R T3/T3P	T2W T3W
ø20	19	7	59	14	5	17	172	35	30	30	25.7	(S1/3) + 18.5	19.5	23	3.0	6.5	8.5	7.5	7.5	9.5
ø25	19	7	59	16.5	6	18	177	40	35	30	30.7	(S1/3)+20.5	22	24.4	2.0	5.5	7.5	8.5	8.5	10.5
ø32	21	7	61	20	6	18	183	40	31.5	35	37.7	(S1/3)+19	25.5	25	3.0	6.5	8.5	9.5	9.5	11.5
ø40	25	7	66	26	8	20	208	50	40	35	46.7	(S1/3) + 18.5	30	25.7	5.0	8.5	10.5	11.5	11.5	13.5
ø50	28	10	78	32	11	23	241	58	46	40	57.7	(S1/3.6)+18.5	35.5	26.2	7.5	11.0	13.0	13.0	13.0	15.0
ø63	28	10	78	38	11	23	241	58	46	40	71.7	(S1/3.6)+18.5	42.5	26.5	7.5	11.0	13.0	13.0	13.0	15.0

Code	Switch mounting: Band															
Bore size (mm)	GC			GD			HD			RD			P1	P2	P3	Pθ
	T0/T5	T2,T3	T2W T3W	T0/T5	T2,T3	T2W T3W	T0/T5	T2,T3	T2W T3W	T0/T5	T2,T3	T2W T3W				
ø20	3.5	3.5	5.5	2.5	2.5	4.5	6.5	6.5	8.5	7.5	7.5	9.5	19.6	21.5	14	(38°)
ø25	4.5	4.5	6.5	1.5	1.5	3.5	5.5	5.5	7.5	8.5	8.5	10.5	22.1	23.9	14	(34°)
ø32	5.5	5.5	7.5	2.5	2.5	4.5	6.5	6.5	8.5	9.5	9.5	11.5	25.6	27.6	16	(30°)
ø40	7.5	7.5	9.5	4.5	4.5	6.5	8.5	8.5	10.5	11.5	11.5	13.5	30.2	32.1	16	(26°)
ø50	9.0	9.0	11.0	7.0	7.0	9.0	11.0	11.0	13.0	13.0	13.0	15.0	35.7	37.4	16	(22°)
ø63	9.0	9.0	11.0	7.0	7.0	9.0	11.0	11.0	13.0	13.0	13.0	15.0	42.7	44.4	16	(20°)

* Installation dimensions of the mounting are the same as those of SCM (double acting). Refer to pages 240 to 251.
* For the dimensions of the accessories, refer to pages 252 and 253.

Round shaped cylinder
Double acting/tandem

SCM-W4 Series

● Bore size:ø20/ø25/ø32/ø40/ø50/ø63

RoHS CAD

Specifications

Item	SCM-W4					
Bore size mm	ø20	ø25	ø32	ø40	ø50	ø63
Actuation	Double acting/tandem					
Working fluid	Compressed air					
Max. working pressure MPa	0.5 (≈73 psi, 5 bar)					
Min. working pressure MPa	0.2 (≈29 psi, 2 bar)				0.1 (≈15 psi, 1 bar)	
Proof pressure MPa	1.6 (≈230 psi, 16 bar)					
Ambient temperature °C	-10 (14°F) to 60 (140°F) (no freezing)					
Port size	Rc1/8				Rc1/4	
Stroke tolerance mm	+1.4 -1.0				+2.3 -1.0	
Working piston speed mm/s	50 to 1000 (Operate within the allowable absorbed energy.)					
Cushion	Rubber cushion					
Lubrication	Not required (use turbine oil ISO VG32 if necessary for lubrication)					
Allowable absorbed energy J	0.1	0.2	0.5	0.9	1.6	1.6

Stroke

Bore size (mm)	Standard stroke (mm)	Max. stroke (mm)	Min. stroke (mm)
ø20	25, 50, 75 100, 125, 150 200, 250, 300	600	10
ø25			
ø32			
ø40			
ø50			
ø63			

*1: The custom stroke is available in 1 mm increments.

Number of installed switches and min. stroke (mm)

● Switch mounting: Rail

Switch quantity	1				2				3				4				5			
Bore size (mm)	Proximity			Reed	Proximity			Reed	Proximity			Reed	Proximity			Reed	Proximity			Reed
	T2, T3	T2W, T3W	T*Y*		T2, T3	T2W, T3W	T*Y*		T2, T3	T2W, T3W	T*Y*		T2, T3	T2W, T3W	T*Y*		T2, T3	T2W, T3W	T*Y*	
ø20	10				25				50	70	70	55	55	70	70	55	75	110	110	90
ø25	10				25				50	70	70	55	55	70	70	55	75	110	110	90
ø32	10				25				50	70	70	55	55	70	70	55	75	110	110	90
ø40	10				25				50	70	70	55	55	70	70	55	75	110	110	90
ø50	10				25				50	65	65	55	55	65	65	55	75	110	110	90
ø63	10				25				50	65	65	55	55	65	65	55	75	110	110	90

● Switch mounting: Band

Switch quantity	1				2				3				4				5			
Bore size (mm)	Proximity			Reed	Proximity			Reed	Proximity			Reed	Proximity			Reed	Proximity			Reed
	T2, T3	T2W, T3W	T*Y*		T2, T3	T2W, T3W	T*Y*		T2, T3	T2W, T3W	T*Y*		T2, T3	T2W, T3W	T*Y*		T2, T3	T2W, T3W	T*Y*	
ø20	10				25	30	35	25	50	55	55	50	75	75	80	70	95	100	100	95
ø25	10				25	30	35	25	50	55	55	50	75	75	80	70	95	100	100	95
ø32	10				25	30	35	25	50	55	55	50	75	75	80	70	95	100	100	95
ø40	10				25	30	35	25	50	55	55	50	75	75	80	70	95	100	100	95
ø50	10				25	30	35	25	50	55	55	50	75	75	80	70	95	100	100	95
ø63	10				25	30	35	25	50	55	55	50	75	75	80	70	95	100	100	95

*1: For types with one switch, when the stroke is between 10 and 24 mm, the trunnion mounting is not available since the switch rail mounting position is different. Refer to page 345 for mounting position.

Switch specifications

● 1-color/2-color LED

Item	2-wire proximity				3-wire proximity				2-wire reed							2-wire proximity
	T1H/ T1V	T2H/T2V/ T2JH/T2JV	T2YH/ T2YV	T2WH/ T2WV	T3H/ T3V	T3PH/ T3PV	T3YH/ T3YV	T3WH/ T3WV	T0H/T0V		T5H/T5V		T8H/T8V			T2YD (*4) T2YDT
Applications	For programming controller, relay, compact solenoid valve	Dedicated for programmable controller			For programmable controller, relay				For programmable controller, relay		For programmable controller, relay (no lamp), serial		For programmable controller, relay			Dedicated for programmable controller
Output method	-				NPN output	PNP output	NPN output	NPN output	-							
Pwr. supp. V.	-				10 to 28 VDC				-							
Load voltage	85 to 265 VAC	10 to 30 VDC		24 VDC ±10%	30 VDC or less				12/24 VDC	100/110 VAC	5/12/24 VDC	100/110 VAC	12/24 VDC	110 VAC	220 VAC	24 VDC ±10%
Load current	5 to 100 mA	5 to 20 mA (*3)			100 mA or less		50 mA or less		5 to 50 mA	7 to 20 mA	50 mA or less	20 mA or less	5 to 50 mA	7 to 20 mA	7 to 10 mA	5 to 20 mA
Indicator	LED (Lit when ON)	LED (Lit when ON)	Red/green LED (Lit when ON)	Red/green LED (Lit when ON)	LED (Lit when ON)	Yellow LED (Lit when ON)	Red/green LED (Lit when ON)	Red/green LED (Lit when ON)	LED (Lit when ON)		No indicator lamp		LED (Lit when ON)			Red/green LED (Lit when ON)
Leakage current	≤ 1 mA at 100 VAC, ≤ 2 mA at 200 VAC	1 mA or less			10 μA or less				0 mA							1 mA or less
Weight g	1 m:33 3 m:87 5 m:142	1 m:18 3 m:49 5 m:80	1 m:33 3 m:87 5 m:142	1 m:18 3 m:49 5 m:80	1 m:18 3 m:49 5 m:80		1 m:33 3 m:87 5 m:142	1 m:18 3 m:49 5 m:80	1 m:18 3 m:49 5 m:80				1 m:33 3 m:87 5 m:142			1 m:61 3 m:166 5 m:272

*1: Refer to Ending Page 1 for detailed switch specifications and dimensions.
*2: Switches other than the above models, such as switches with connectors, are also available. Refer to Ending Page 1.
*3: Max. load current: 20 mA at 25°C. The current is lower than 20 mA if the operating ambient temperature around the switch is higher than 25˚C. (5 to 10 mA at 60°C)
*4: Switch for AC magnetic field (T2YD/T2YDT) cannot be used in DC magnetic field.

Cylinder weight

(Unit: kg)

Item/mounting	Weight when stroke (S) = 0 mm	Additional weight					Switch weight (per 1 pc.)	Added weight /S = 10 mm	Additional weight per S = 10 mm (With switch rail)	Band weight per switch
Bore size (mm)	Basic (00)	Basic	Axial foot	Flange	Clevis	Trunnion				
ø20	0.10	0.00	0.11	0.03	0.05	0.01	Refer to the weight in the switch specifications.	0.01	0.012	0.007
ø25	0.17	-0.01	0.12	0.03	0.07	0.01		0.014	0.016	0.007
ø32	0.26	0.00	0.16	0.06	0.15	0.03		0.018	0.02	0.007
ø40	0.41	-0.01	0.21	0.07	0.22	0.04		0.03	0.032	0.007
ø50	0.77	-0.01	0.47	0.33	0.39	0.13		0.044	0.046	0.008
ø63	1.07	0.02	0.74	0.52	0.70	0.16		0.052	0.054	0.009

(Example) Product weight of SCM-W4-LB-40D-100-T2H-D
- (1) Product weight when S = 0 mm ····· 0.41 kg
- (2) Additional weight when S = 100 mm ····· 0.032 x $\frac{100}{10}$ =0.32 kg
- (3) Weight of 2 switches····· 0.036 kg
- (4) (1) + (2) + (3) should be added ····· 0.41 kg+0.32 kg+0.036 kg=0.766 kg
- Product weight (Double (4) and add additional weight) ·· 0.766 kgx2+0.21 kg=1.742 kg

How to order

No switch (built-in magnet for switch)

SCM-W4 - LB - 40 ( ) D - 100 ——— J I

With switch (built-in magnet for switch)

SCM-W4 - LB - 40 ( ) D - 100 - T0H - D - ( ) J I

Ⓐ Mounting *1

Ⓑ Bore size

Ⓒ Port thread

Ⓓ Cushion

Ⓔ Stroke

Ⓕ Switch model No. *4 *5

Ⓖ Switch quantity

Ⓗ Switch mounting

Ⓘ Option *2 *6 *8

Ⓙ Accessory *9

Code	Description
Ⓐ Mounting	
00	Basic
LB	Axial foot
FA	Rod side flange
FB	Head side flange
CA	Eye bracket
TA	Rod side trunnion
TB	Head side trunnion

Ⓑ Bore size (mm)	
20	ø20
25	ø25
32	ø32
40	ø40
50	ø50
63	ø63

Ⓒ Port thread	
Blank	Rc thread
N	NPT thread (made-to-order product)
G	G thread (made-to-order product)

Ⓓ Cushion	
D	With two-sided rubber cushion

Ⓔ Stroke (mm)

Bore size	Stroke *3	Custom stroke
ø20 to ø63	10 to 600	In 1 mm increments

Ⓕ Switch model No.

Axial lead wire	Radial lead wire	Contact	Voltage AC	Voltage DC	Indicator	Lead wire
T0H*	T0V*	Reed	●	●	1-color LED	2-wire
T5H*	T5V*	Reed	●	●	No indicator lamp	2-wire
T8H*	T8V*	Reed	●	●	1-color LED	2-wire
T1H*	T1V*	Proximity	●		1-color LED	2-wire
T2H*	T2V*	Proximity		●	1-color LED	2-wire
T3H*	T3V*	Proximity		●	1-color LED	3-wire
T3PH*	T3PV*	Proximity		●	1-color LED	3-wire
T2WH*	T2WV*	Proximity		●	2-color LED	2-wire
T2YH*	T2YV*	Proximity		●	2-color LED	2-wire
T3WH*	T3WV*	Proximity		●	2-color LED	3-wire
T3YH*	T3YV*	Proximity		●	2-color LED	3-wire
T2YD*	-	Proximity		●	2-color LED AC magnetic field	2-wire
T2YDT*	-	Proximity		●	2-color LED AC magnetic field	2-wire
T2JH*	T2JV*	Proximity		●	1-color LED off-delay	2-wire

*** Lead wire length**	
Blank	1 m (standard)
3	3 m (option)
5	5 m (option)

Ⓖ Switch quantity	
R	1 on rod side
H	1 on head side
D	2
T	3
4	4 (when there are more than 4 switches, indicate switch quantity.)

Ⓗ Switch mounting	
Blank	Rail method
Z	Band method

Ⓘ Option

		Max. ambient temp.	Instantaneous max. temp.
J	Bellows	100°C	200°C
L	Bellows	250°C	400°C
Q	Switch rail included at shipment		
M	Piston rod material (stainless steel)		
P6	Copper and PTFE free		

Ⓙ Accessory	
I	Rod eye
Y	Rod clevis (pin and snap ring included)
B2	Clevis bracket

⚠ Precautions for model No. selection

*1 : Mounting bracket will be shipped with the product.
*2 : If the product is supplied with bellows and the mounting bracket is LB, FA, or TA, it will be shipped assembled.
*3 : Refer to page 328 for the number of installed switches and the min. stroke.
*4 : Switches other than Ⓕ Switch model No. are also available. (Made to order) Refer to Ending Page 1 for details.
*5 : T8H/V switches cannot be mounted when the bore size is from ø20 to ø40 and the switch mounting style is the rail.
*6 : The instantaneous max. temperature is the temperature when sparks, cutting chips, etc., instantaneously contact the bellows.
*7 : Refer to Ending Page 85 for custom specifications of rod end form.
*8 : "Q" (switch rail enclosed at shipment) is not available for the "Z" switch mounting.
*9 : "I" and "Y" cannot be selected together.
*10 : Switches are shipped with the product. Contact CKD if assembling before shipment is necessary.

[Example of model No.]

SCM-W4-LB-40D-100-T0H-D-JI

Model: Round shaped cylinder, double acting/tandem

Ⓐ Mounting	: Axial foot
Ⓑ Bore size	: ø40 mm
Ⓒ Port thread	: Rc thread
Ⓓ Cushion	: With two-sided rubber cushion
Ⓔ Stroke	: 100 mm
Ⓕ Switch model No.	: Reed T0H switch, lead wire 1 m
Ⓖ Switch quantity	: 2
Ⓗ Switch mounting	: Rail
Ⓘ Option	: Bellows material for max. ambient temperature 100°C
Ⓙ Accessory	: Rod eye

How to order switch

[Switch mounting: Rail]

● Switch body + mounting rail set

SCM - T0H - D - 40 - 100

- T0H: Switch model No. (Item Ⓕ on page 330)
- D: Switch quantity (Item Ⓖ on page 330)
- 40: Bore size (Item Ⓑ on page 330)
- 100: Stroke (*1) (Item Ⓔ on page 330)

● Mounting rail only

SCM - T - 40 - 100

- T: Mounting rail
- 40: Bore size (Item Ⓑ on page 330)
- 100: Stroke (*2) (*1) (Item Ⓔ on page 330)

*1: Indicate X if the stroke exceeds 300 mm.
If exceeding 300 mm, a short rail (with 100 mm switch adjustment length) will be included per switch.
*2: If indicating X when ordering mounting rails only, order the same number of rails as that of applicable switches.

[Switch mounting: Band]

● Switch body + mounting bracket set + band

SCM - T2H* - 40 - Z

- T2H*: Switch model No. (Item Ⓕ on page 330)
- 40: Bore size (Item Ⓑ on page 330)

● Mounting bracket set + band

SCM - Z - 40

- 40: Bore size (Item Ⓑ on page 330)

[Switch body only]

SW - T0H

- T0H: Switch model No. (Item Ⓕ on page 330)

How to order mounting bracket

Bore size (mm) / Mounting bracket	ø20	ø25	ø32	ø40	ø50	ø63
Foot (LB)	SCM-LB-20	SCM-LB-25	SCM-LB-32	SCM-LB-40	SCM-LB-50	SCM-LB-63
Flange (FA/FB)	SCM-FA-20	SCM-FA-25	SCM-FA-32	SCM-FA-40	SCM-FA-50	SCM-FA-63
Eye bracket (CA)	SCM-CA-20	SCM-CA-25	SCM-CA-32	SCM-CA-40	SCM-CA-50	SCM-CA-63
Trunnion (TA/TB)	SCM-TA-20	SCM-TA-25	SCM-TA-32	SCM-TA-40	SCM-TA-50	SCM-TA-63

*1: All mounting brackets are supplied with mounting bolts.
*2: The foot mounting bracket is provided as 2 pcs./set.

Applications

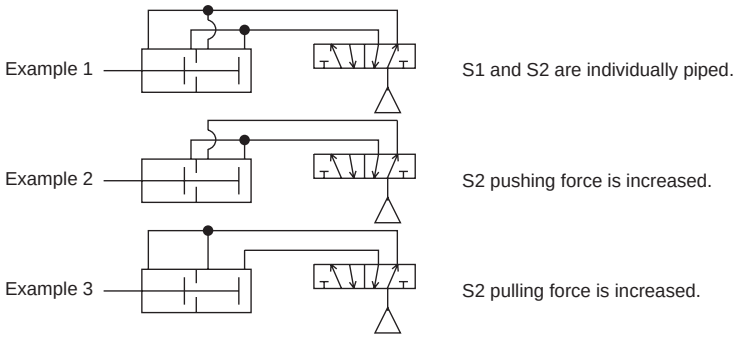

Internal structure and parts list

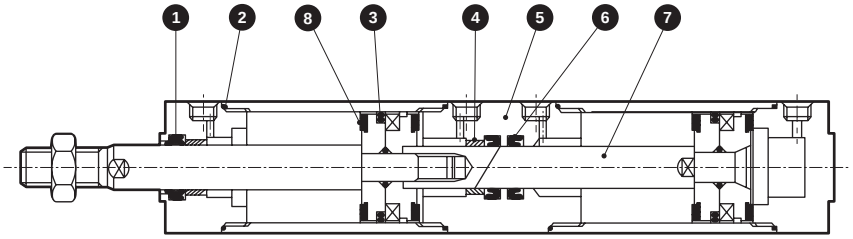

No.	Part name	Material	Remarks
1	Rod packing	Nitrile rubber	
2	Cylinder gasket	Nitrile rubber	
3	Piston packing	Nitrile rubber	
4	Bush	Oil impregnated bearing alloy	
5	Intermediate cover	Aluminum alloy	Hard alumite
6	Rod packing	Nitrile rubber	
7	Piston rod	ø20 to ø25: Stainless steel ø32 to ø63: Steel	Industrial chrome plating
8	Cushion rubber	Urethane rubber	

Parts other than the above are the same as the double acting.

Repair parts list

Bore size (mm)	Kit No.	Repair parts No.
ø20	SCM-W4-20DK	❶❷❸❽
ø25	SCM-W4-25DK	
ø32	SCM-W4-32DK	
ø40	SCM-W4-40DK	
ø50	SCM-W4-50DK	
ø63	SCM-W4-63DK	

*1: Specify the kit No. when placing an order.
*2: ❻Rod packing is not included in the repair parts kit since it is not replaceable.
Two ❽ cushion rubbers are included in the repair parts kit since only two of the four cushion rubbers are replaceable.

Dimensions

● Double acting tandem

• Switch mounting: Rail

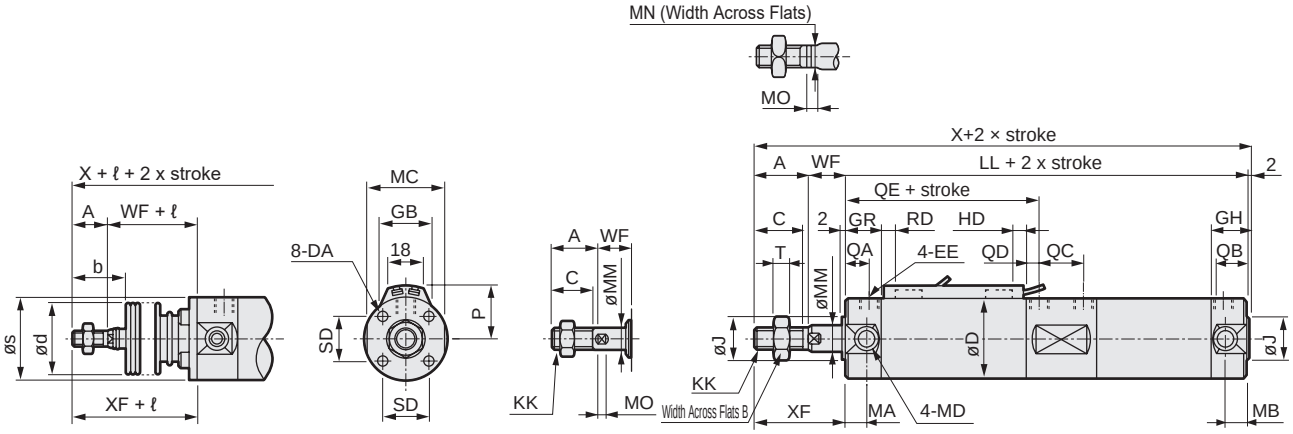

With bellows

ø20/ø25

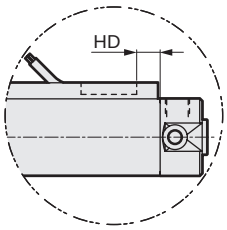

In the case of T2W, T3W

• Switch mounting: Band

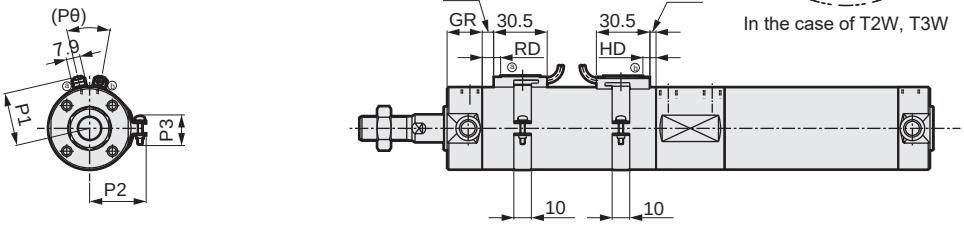

*1: Refer to page 345 for RD, HD and protruding dimensions of the 2-color LED, off-delay, AC magnetic field proof, T1H/V and T8H/V switches.

Code / Bore size (mm)	Basic (00) Basic dimensions																			
	A	B	C	D	DA	EE	GH	GR	J	KK	LL	MA	MB	MC	MD	MM	MN	MO	QA	QB
ø20	18	13	16	26	M4 depth 6.5	Rc1/8	17	19	12	M8	135	11	11	24	M5	8	6	4	12	10
ø25	22	17	20	31	M5 depth 6.5	Rc1/8	17	19	14	M 10 x 1.25	135	11	11	29	M6	10	8	5	12	10
ø32	22	17	20	38	M5 depth 7.5	Rc1/8	17	19	18	M 10 x 1.25	141	11	10	36	M8	12	10	5.5	12	10
ø40	30	22	27	47	M6 depth 12	Rc1/8	19	20	25	M 14 x 1.5	156	12	10	44	M10	16	14	6	13	12
ø50	35	27	32	58	M8 depth 16	Rc1/4	22	25	30	M 18 x 1.5	181	13	12	55	M12	20	17	8	15	12
ø63	35	27	32	72	M10 depth 16	Rc1/4	22	25	32	M 18 x 1.5	181	13	12	69	M14	20	17	8	15	12

Code / Bore size (mm)									With bellows				Switch mounting: Rail							
	QC	QD	QE	SD	T	WF	X	XF	b	d	s	ℓ	P	GB	HD			RD		
															T0/T5	T2/T2R T3/T3P	T2W T3W	T0/T5	T2/T2R T3/T3P	T2W T3W
ø20	19	7	59	14	5	17	172	35	30	30	25.7	(stroke/3) + 18.5	19.5	23	3.0	6.5	8.5	7.5	7.5	9.5
ø25	19	7	59	16.5	6	18	177	40	35	30	30.7	(stroke/3) + 20.5	22	24.4	2.0	5.5	7.5	8.5	8.5	10.5
ø32	21	7	61	20	6	18	183	40	31.5	35	37.7	(stroke/3) + 19	25.5	25	3.0	6.5	8.5	9.5	9.5	11.5
ø40	25	7	66	26	8	20	208	50	40	35	46.7	(stroke/3) + 18.5	30	25.7	5.0	8.5	10.5	11.5	11.5	13.5
ø50	28	10	78	32	11	23	241	58	46	40	57.7	(stroke/3.6) + 18.5	35.5	26.2	7.5	11.0	13.0	13.0	13.0	15.0
ø63	28	10	78	38	11	23	241	58	46	40	71.7	(stroke/3.6) + 18.5	42.5	26.5	7.5	11.0	13.0	13.0	13.0	15.0

Code / Bore size (mm)	Switch mounting: Band															
	GC			GD			HD			RD			P1	P2	P3	Pθ
	T0/T5	T2,T3	T2W T3W	T0/T5	T2,T3	T2W T3W	T0/T5	T2,T3	T2W T3W	T0/T5	T2,T3	T2W T3W				
ø20	3.5	3.5	5.5	2.5	2.5	4.5	6.5	6.5	8.5	7.5	7.5	9.5	19.6	21.5	14	(38°)
ø25	4.5	4.5	6.5	1.5	1.5	3.5	5.5	5.5	7.5	8.5	8.5	10.5	22.1	23.9	14	(34°)
ø32	5.5	5.5	7.5	2.5	2.5	4.5	6.5	6.5	8.5	9.5	9.5	11.5	25.6	27.6	16	(30°)
ø40	7.5	7.5	9.5	4.5	4.5	6.5	8.5	8.5	10.5	11.5	11.5	13.5	30.2	32.1	16	(26°)
ø50	9.0	9.0	11.0	7.0	7.0	9.0	11.0	11.0	13.0	13.0	13.0	15.0	35.7	37.4	16	(22°)
ø63	9.0	9.0	11.0	7.0	7.0	9.0	11.0	11.0	13.0	13.0	13.0	15.0	42.7	44.4	16	(20°)

* Installation dimensions of the mounting are the same as those of SCM (double acting). Refer to pages 240 to 251.
* For the dimensions of the accessories, refer to pages 252 and 253.

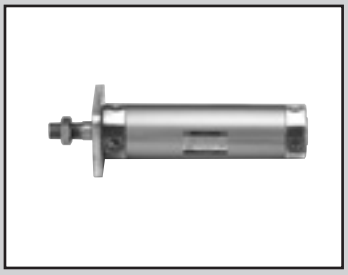

Round shaped cylinder
Double acting/rotation-stop

SCM-M Series

● Bore size:ø20/ø25/ø32/ø40/ø50/ø63

JIS symbol

RoHS CAD

Specifications

1 MPa = 10 bar

Item	SCM-M					
Bore size mm	ø20	ø25	ø32	ø40	ø50	ø63
Actuation	Double acting/rotation-stop					
Working fluid	Compressed air					
Max. working pressure MPa	1.0 (≈150 psi, 10 bar)					
Min. working pressure MPa	0.1 (≈15 psi, 1 bar)					0.05 (≈7.3 psi)
Proof pressure MPa	1.6 (≈230 psi, 16 bar)					
Ambient temperature °C	-10 (14°F) to 60 (140°F) (no freezing)					
Port size	Rc1/8				Rc1/4	
Stroke tolerance mm	+1.4 0				+2.3 0	
Working piston speed mm/s	30 to 1000 (Operate within the allowable absorbed energy.)					
Cushion	Rubber cushion					
Lubrication	Not required (use turbine oil ISO VG32 if necessary for lubrication)					
Non-rotating accuracy °	±1					
Allowable absorbed energy J	0.1	0.2	0.5	0.9	1.6	1.6

Stroke

Bore size (mm)	Standard stroke (mm)	Max. stroke (mm)	Min. stroke (mm)
ø20	25, 50, 75 100, 125, 150 200, 250, 300	600	10
ø25			
ø32			
ø40			
ø50			
ø63			

*1: The custom stroke is available in 1 mm increments.

Number of installed switches and min. stroke (mm)

● Switch mounting: Rail

Switch quantity	1				2				3				4				5			
Bore size (mm)	Proximity			Reed	Proximity			Reed	Proximity			Reed	Proximity			Reed	Proximity			Reed
	T2, T3	T2W, T3W	T*Y*		T2, T3	T2W, T3W	T*Y*		T2, T3	T2W, T3W	T*Y*		T2, T3	T2W, T3W	T*Y*		T2, T3	T2W, T3W	T*Y*	
ø20	10				25				50	70	70	55	55	70	70	55	75	110	110	90
ø25	10				25				50	70	70	55	55	70	70	55	75	110	110	90
ø32	10				25				50	70	70	55	55	70	70	55	75	110	110	90
ø40	10				25				50	70	70	55	55	70	70	55	75	110	110	90
ø50	10				25				50	65	65	55	55	65	65	55	75	110	110	90
ø63	10				25				50	65	65	55	55	65	65	55	75	110	110	90

● Switch mounting: Band

Switch quantity	1				2				3				4				5			
Bore size (mm)	Proximity			Reed	Proximity			Reed	Proximity			Reed	Proximity			Reed	Proximity			Reed
	T2, T3	T2W, T3W	T*Y*		T2, T3	T2W, T3W	T*Y*		T2, T3	T2W, T3W	T*Y*		T2, T3	T2W, T3W	T*Y*		T2, T3	T2W, T3W	T*Y*	
ø20	10				25	30	35	25	50	55	55	50	75	75	80	70	95	100	100	95
ø25	10				25	30	35	25	50	55	55	50	75	75	80	70	95	100	100	95
ø32	10				25	30	35	25	50	55	55	50	75	75	80	70	95	100	100	95
ø40	10				25	30	35	25	50	55	55	50	75	75	80	70	95	100	100	95
ø50	10				25	30	35	25	50	55	55	50	75	75	80	70	95	100	100	95
ø63	10				25	30	35	25	50	55	55	50	75	75	80	70	95	100	100	95

*1: For types with one switch, when the stroke is between 10 and 24 mm, the trunnion mounting is not available since the switch rail mounting position is different. Refer to page 345 for mounting position.

Switch specifications

● 1-color/2-color LED

Item	2-wire proximity				3-wire proximity				2-wire reed							2-wire proximity
	T1H/ T1V	T2H/T2V/ T2JH/T2JV	T2YH/ T2YV	T2WH/ T2WV	T3H/ T3V	T3PH/ T3PV	T3YH/ T3YV	T3WH/ T3WV	T0H/T0V		T5H/T5V		T8H/T8V			T2YD (*4) T2YDT
Applications	For programming controller, relay, compact solenoid valve	Dedicated for programmable controller			For programmable controller, relay				For programmable controller, relay		For programmable controller, relay (no lamp), serial		For programmable controller, relay			Dedicated for programmable controller
Output method	-				NPN output	PNP output	NPN output	NPN output	-							
Pwr. supp. V.	-				10 to 28 VDC				-							
Load voltage	85 to 265 VAC	10 to 30 VDC		24 VDC ±10%	30 VDC or less				12/24 VDC	100/110 VAC	5/12/24 VDC	100/110 VAC	12/24 VDC	110 VAC	220 VAC	24 VDC ±10%
Load current	5 to 100 mA	5 to 20 mA (*3)			100 mA or less		50 mA or less		5 to 50 mA	7 to 20 mA	50 mA or less	20 mA or less	5 to 50 mA	7 to 20 mA	7 to 10 mA	5 to 20 mA
Indicator	LED (Lit when ON)	LED (Lit when ON)	Red/green LED (Lit when ON)	Red/green LED (Lit when ON)	LED (Lit when ON)	Yellow LED (Lit when ON)	Red/green LED (Lit when ON)	Red/green LED (Lit when ON)	LED (Lit when ON)		No indicator lamp		LED (Lit when ON)			Red/green LED (Lit when ON)
Leakage current	≤ 1 mA at 100 VAC, ≤ 2 mA at 200 VAC	1 mA or less			10 μA or less				0 mA							1 mA or less
Weight g	1 m:33 3 m:87 5 m:142	1 m:18 3 m:49 5 m:80	1 m:33 3 m:87 5 m:142	1 m:18 3 m:49 5 m:80	1 m:18 3 m:49 5 m:80		1 m:33 3 m:87 5 m:142	1 m:18 3 m:49 5 m:80	1 m:18 3 m:49 5 m:80				1 m:33 3 m:87 5 m:142			1 m:61 3 m:166 5 m:272

*1: Refer to Ending Page 1 for detailed switch specifications and dimensions.
*2: Switches other than the above models, such as switches with connectors, are also available. Refer to Ending Page 1.
*3: Max. load current: 20 mA at 25°C. The current is lower than 20 mA if the operating ambient temperature around the switch is higher than 25°C. (5 to 10 mA at 60°C)
*4: Switch for AC magnetic field (T2YD/T2YDT) cannot be used in DC magnetic field.

Cylinder weight

(Unit: kg)

Item/mounting / Bore size	Product weight when stroke (S) = 0 mm: Basic	Axial foot	Flange	Clevis	Trunnion	Switch weight (per 1 pc)	Additional weight per S = 10 mm	Additional weight per S = 10 mm (With switch rail)	Band weight per switch
ø20	0.10	0.21	0.13	0.15	0.11	Refer to the weight in the switch specifications.	0.010	0.012	0.007
ø25	0.18	0.31	0.22	0.26	0.20		0.014	0.016	0.007
ø32	0.27	0.43	0.33	0.42	0.30		0.018	0.020	0.007
ø40	0.44	0.66	0.52	0.67	0.49		0.030	0.032	0.007
ø50	0.85	1.33	1.19	1.25	0.99		0.044	0.046	0.008
ø63	1.15	1.87	1.65	1.83	1.29		0.052	0.054	0.009

(Example) Product weight of SCM-M-LB-40D-100-T2H-D
- Product weight when S = 0 mm ····· 0.66 kg
- Additional weight when S = 100 mm ····· $0.032 \times \frac{100}{10} = 0.32$ kg
- Weight of 2 switches ····· 0.036 kg
- Product weight ····· 0.66 kg+0.32 kg+0.036 kg=1.016 kg

Theoretical thrust table

(Unit: N)

Bore size (mm)	Operating direction	Working pressure MPa: 0.05	0.1	0.15	0.2	0.3	0.4	0.5	0.6	0.7	0.8	0.9	1.0
ø20	Push	–	31.4	47.1	62.8	94.2	1.26×10^2	1.57×10^2	1.88×10^2	2.20×10^2	2.51×10^2	2.83×10^2	3.14×10^2
	Pull	–	26.4	39.6	52.8	79.2	1.06×10^2	1.32×10^2	1.58×10^2	1.85×10^2	2.11×10^2	2.38×10^2	2.64×10^2
ø25	Push	–	49.1	73.6	98.2	1.47×10^2	1.96×10^2	2.45×10^2	2.95×10^2	3.44×10^2	3.93×10^2	4.42×10^2	4.91×10^2
	Pull	–	41.2	61.9	82.5	1.24×10^2	1.65×10^2	2.06×10^2	2.47×10^2	2.89×10^2	3.30×10^2	3.71×10^2	4.12×10^2
ø32	Push	–	80.4	1.21×10^2	1.61×10^2	2.41×10^2	3.22×10^2	4.02×10^2	4.83×10^2	5.63×10^2	6.43×10^2	7.24×10^2	8.04×10^2
	Pull	–	69.1	1.04×10^2	1.38×10^2	2.07×10^2	2.76×10^2	3.46×10^2	4.15×10^2	4.84×10^2	5.53×10^2	6.22×10^2	6.91×10^2
ø40	Push	–	1.26×10^2	1.88×10^2	2.51×10^2	3.77×10^2	5.03×10^2	6.28×10^2	7.54×10^2	8.80×10^2	1.01×10^3	1.13×10^3	1.26×10^3
	Pull	–	1.06×10^2	1.58×10^2	2.11×10^2	3.17×10^2	4.22×10^2	5.28×10^2	6.33×10^2	7.39×10^2	8.44×10^2	9.50×10^2	1.06×10^3
ø50	Push	–	1.96×10^2	2.95×10^2	3.93×10^2	5.89×10^2	7.85×10^2	9.82×10^2	1.18×10^3	1.37×10^3	1.57×10^3	1.77×10^3	1.96×10^3
	Pull	–	1.65×10^2	2.47×10^2	3.30×10^2	4.95×10^2	6.60×10^2	8.25×10^2	9.90×10^2	1.15×10^3	1.32×10^3	1.48×10^3	1.65×10^3
ø63	Push	1.56×10^2	3.12×10^2	4.68×10^2	6.23×10^2	9.35×10^2	1.25×10^3	1.56×10^3	1.87×10^3	2.18×10^3	2.49×10^3	2.81×10^3	3.12×10^3
	Pull	2.40×10^2	2.80×10^2	4.20×10^2	5.61×10^2	8.41×10^2	1.12×10^3	1.40×10^3	1.68×10^3	1.96×10^3	2.24×10^3	2.52×10^3	2.80×10^3

SCP*3
CMK2
CMA2
SCM
SCG
SCA2
SCS2
CKV2
CAV2/COVP/N2
SSD2
SSG
SSD
CAT
MDC2
MVC
SMG
MSD/MSDG
FC*
STK
SRL3
SRG3
SRM3
SRT3
MRL2
MRG2
SM-25
ShkAbs
FJ
FK
Spd Contr
Ending

How to order

No switch (built-in magnet for switch)

SCM-M - LB - 40 ( ) D - 100 ——— J I

With switch (built-in magnet for switch)

SCM-M - LB - 40 ( ) D - 100 - T0H - D - ( ) J I

Ⓐ Mounting *1
Ⓑ Bore size
Ⓒ Port thread
Ⓓ Cushion
Ⓔ Stroke
Ⓕ Switch model No. *4 *5
Ⓖ Switch quantity
Ⓗ Switch mounting
Ⓘ Option *2 *6 *7
Ⓙ Accessory *9

Code	Description
Ⓐ Mounting	
00	Basic
LB	Axial foot
FA	Rod side flange
FB	Head side flange
CA	Eye bracket
TA	Rod side trunnion
TB	Head side trunnion
Ⓑ Bore size (mm)	
20	ø20
25	ø25
32	ø32
40	ø40
50	ø50
63	ø63
Ⓒ Port thread	
Blank	Rc thread
N	NPT thread (made-to-order product)
G	G thread (made-to-order product)
Ⓓ Cushion	
D	With two-sided rubber cushion

Ⓔ Stroke (mm)

Bore size	Stroke *2	Custom stroke
ø20 to ø63	10 to 600	In 1 mm increments

Ⓕ Switch model No.

Axial lead wire	Radial lead wire	Contact	Voltage AC	Voltage DC	Indicator	Lead wire
T0H*	T0V*	Reed	●	●	1-color LED	2-wire
T5H*	T5V*	Reed	●	●	No indicator lamp	2-wire
T8H*	T8V*	Reed	●	●	1-color LED	2-wire
T1H*	T1V*	Proximity	●		1-color LED	2-wire
T2H*	T2V*	Proximity		●	1-color LED	2-wire
T3H*	T3V*	Proximity		●	1-color LED	3-wire
T3PH*	T3PV*	Proximity		●	1-color LED	3-wire
T2WH*	T2WV*	Proximity		●	2-color LED	2-wire
T2YH*	T2YV*	Proximity		●	2-color LED	2-wire
T3WH*	T3WV*	Proximity		●	2-color LED	3-wire
T3YH*	T3YV*	Proximity		●	2-color LED	3-wire
T2YD*	-	Proximity		●	2-color LED AC magnetic field	2-wire
T2YDT*	-	Proximity		●	2-color LED AC magnetic field	2-wire
T2JH*	T2JV*	Proximity		●	1-color LED off-delay	2-wire

* Lead wire length	
Blank	1 m (standard)
3	3 m (option)
5	5 m (option)

Ⓖ Switch quantity	
R	1 on rod side
H	1 on head side
D	2
T	3
4	4 (when there are more than 4 switches, indicate switch quantity.)

Ⓗ Switch mounting	
Blank	Rail method
Z	Band method

Ⓘ Option

		Max. ambient temp.	Instantaneous max. temp.
J	Bellows	100°C	200°C
L	Bellows	250°C	400°C
Q	Switch rail included at shipment		

Ⓙ Accessory	
I	Rod eye
Y	Rod clevis (pin and snap ring included)
B2	Clevis bracket

⚠ Precautions for model No. selection

*1 : Mounting bracket will be shipped with the product.
*2 : If the product is supplied with bellows and the mounting bracket is LB, FA, or TA, it will be shipped assembled.
*3 : Refer to page 334 for the number of installed switches and the min. stroke.
*4 : Switches other than Ⓕ Switch model No. are also available. (Made to order) Refer to Ending Page 1 for details.
*5 : T8H/V switches cannot be mounted when the bore size is from ø20 to ø40 and the switch mounting style is the rail.
*6 : The instantaneous max. temperature is the temperature when sparks, cutting chips, etc., instantaneously contact the bellows.
*7 : Refer to Ending Page 85 for custom specifications of rod end form.
*8 : "Q" (switch rail enclosed at shipment) is not available for the "Z" switch mounting.
*9 : "I" and "Y" cannot be selected together.
*10 : Switches are shipped with the product. Contact CKD if assembling before shipment is necessary.

[Example of model No.]

SCM-M-LB-40D-100-T0H-D-JI

Model: Round shaped cylinder, double acting/rotation-stop

Ⓐ Mounting	: Axial foot
Ⓑ Bore size	: ø40 mm
Ⓒ Port thread	: Rc thread
Ⓓ Cushion	: With two-sided rubber cushion
Ⓔ Stroke	: 100 mm
Ⓕ Switch model No.	: Reed T0H switch, lead wire 1 m
Ⓖ Switch quantity	: 2
Ⓗ Switch mounting	: Rail
Ⓘ Option	: Bellows material for max. ambient temperature 100°C
Ⓙ Accessory	: Rod eye

How to order switch

[Switch mounting: Rail]

● Switch body + mounting rail set

SCM - T0H - D - 40 - 100

- T0H: Switch model No. (Item Ⓕ on page 336)
- D: Switch quantity (Item Ⓖ on page 336)
- 40: Bore size (Item Ⓑ on page 336)
- 100: Stroke (*1) (Item Ⓔ on page 336)

● Mounting rail only

SCM - T - 40 - 100

- T: Mounting rail
- 40: Bore size (Item Ⓑ on page 336)
- 100: Stroke (*2) (*1) (Item Ⓔ on page 336)

*1: Indicate X if the stroke exceeds 300 mm.
If exceeding 300 mm, a short rail (with 100 mm switch adjustment length) will be included per switch.
*2: If indicating X when ordering mounting rails only, order the same number of rails as that of applicable switches.

[Switch mounting: Band]

● Switch body + mounting bracket set + band

SCM - T2H* - 40 - Z

- T2H*: Switch model No. (Item Ⓕ on page 336)
- 40: Bore size (Item Ⓑ on page 336)

● Mounting bracket set + band

SCM - Z - 40

- 40: Bore size (Item Ⓑ on page 336)

[Switch body only]

SW - T0H

- T0H: Switch model No. (Item Ⓕ on page 336)

How to order mounting bracket

Bore size (mm) / Mounting bracket	ø20	ø25	ø32	ø40	ø50	ø63
Foot (LB)	SCM-LB-20	SCM-LB-25	SCM-LB-32	SCM-LB-40	SCM-LB-50	SCM-LB-63
Flange (FA/FB)	SCM-FA-20	SCM-FA-25	SCM-FA-32	SCM-FA-40	SCM-FA-50	SCM-FA-63
Eye bracket (CA)	SCM-CA-20	SCM-CA-25	SCM-CA-32	SCM-CA-40	SCM-CA-50	SCM-CA-63
Trunnion (TA/TB)	SCM-TA-20	SCM-TA-25	SCM-TA-32	SCM-TA-40	SCM-TA-50	SCM-TA-63

*1: All mounting brackets are supplied with mounting bolts.
*2: The foot mounting bracket is provided as 2 pcs./set.

Internal structure

Same as standard. Refer to page 236.

Repair parts list

Bore size (mm)	Kit No.	Repair parts No.
ø20	SCM-M-20K	❸ ❻ ❽ ❿ ⓭
ø25	SCM-M-25K	
ø32	SCM-M-32K	
ø40	SCM-M-40K	
ø50	SCM-M-50K	
ø63	SCM-M-63K	

SCP*3
CMK2
CMA2
SCM
SCG
SCA2
SCS2
CKV2
CAV2/ COVP/N2
SSD2
SSG
SSD
CAT
MDC2
MVC
SMG
MSD/ MSDG
FC*
STK
SRL3
SRG3
SRM3
SRT3
MRL2
MRG2
SM-25
ShkAbs
FJ
FK
Spd Contr
Ending

Dimensions

● Double acting rotation-stop

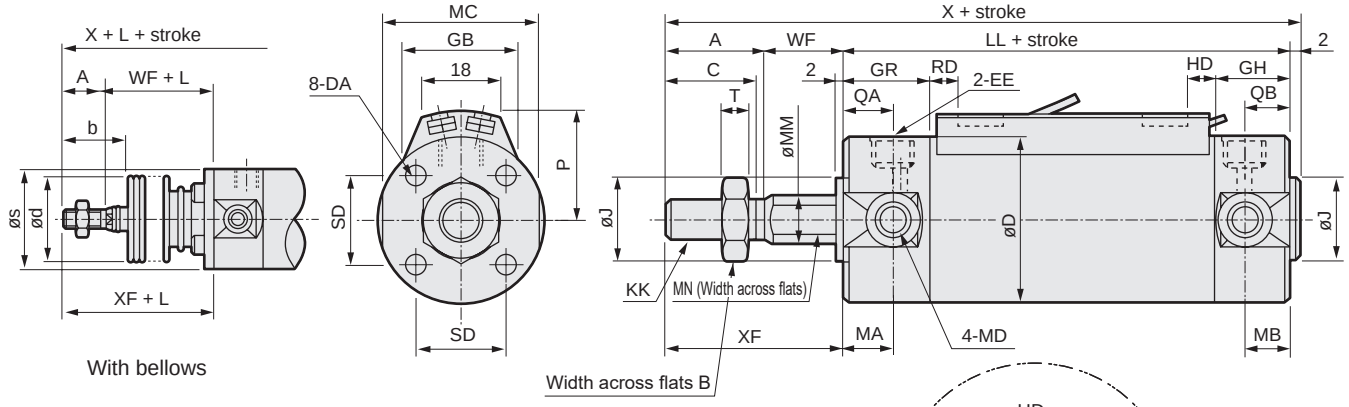

· Switch mounting: Rail

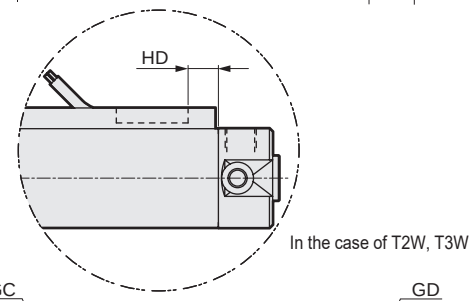

· Switch mounting: Band

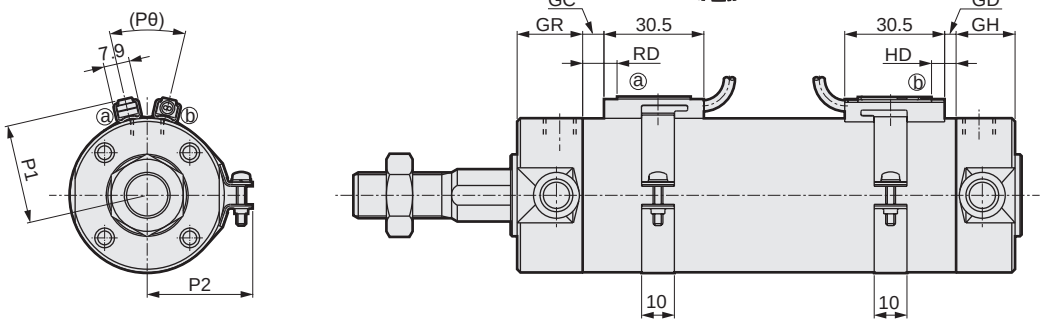

*1: Refer to page 345 for RD, HD and protruding dimensions of the 2-color LED, off-delay, AC magnetic field proof, T1H/V and T8H/V switches.

Code	Basic (00) Basic dimensions																		
Bore size (mm)	A	B	C	D	DA	EE	GH	GR	J	KK	LL	MA	MB	MC	MD	MM	MN	QA	QB
ø20	18	13	16	26	M4 depth 6.5	Rc1/8	17	19	12	M8	69	11	11	24	M5	10	8	12	10
ø25	22	17	20	31	M5 depth 6.5	Rc1/8	17	19	14	M10x1.25	69	11	11	29	M6	12	10	12	10
ø32	22	17	20	38	M5 depth 7.5	Rc1/8	17	19	18	M10x1.25	71	11	10	36	M8	12	10	12	10
ø40	30	22	27	47	M6 depth 12	Rc1/8	19	20	25	M14x1.5	78	12	10	44	M10	16	14	13	12
ø50	35	27	32	58	M8 depth 16	Rc1/4	22	25	30	M18x1.5	90	13	12	55	M12	20	18	15	12
ø63	35	27	32	72	M10 depth 16	Rc1/4	22	25	32	M18x1.5	90	13	12	69	M14	20	18	15	12

Code						With bellows				Switch mounting: Rail							
Bore size (mm)	SD	T	WF	X	XF	b	d	s	L	P	GB	HD			RD		
												T0/T5	T2/T2R T3/T3P	T2W T3W	T0/T5	T2/T2R T3/T3P	T2W T3W
ø20	14	5	17	106	35	30	30	25.7	(Stroke/3) + 18.5	19.5	23	3.0	6.5	8.5	7.5	7.5	9.5
ø25	16.5	6	18	111	40	35	30	30.7	(Stroke/3) + 20.5	22	24.4	2.0	5.5	7.5	8.5	8.5	10.5
ø32	20	6	18	113	40	31.5	35	37.7	(Stroke/3) + 19	25.5	25	3.0	6.5	8.5	9.5	9.5	11.5
ø40	26	8	20	130	50	40	35	46.7	(Stroke/3) + 18.5	30	25.7	5.0	8.5	10.5	11.5	11.5	13.5
ø50	32	11	23	150	58	46	40	57.7	(Stroke/3.6) + 18.5	35.5	26.2	7.5	11.0	13.0	13.0	13.0	15.0
ø63	38	11	23	150	58	46	40	71.7	(Stroke/3.6) + 18.5	42.5	26.5	7.5	11.0	13.0	13.0	13.0	15.0

Code	Switch mounting: Band															
Bore size (mm)	GC			GD			HD			RD			P1	P2	P3	Pθ
	T0/T5	T2, T3	T2W T3W	T0/T5	T2, T3	T2W T3W	T0/T5	T2, T3	T2W T3W	T0/T5	T2, T3	T2W T3W				
ø20	3.5	3.5	5.5	2.5	2.5	4.5	6.5	6.5	8.5	7.5	7.5	9.5	19.6	21.5	14	(38°)
ø25	4.5	4.5	6.5	1.5	1.5	3.5	5.5	5.5	7.5	8.5	8.5	10.5	22.1	23.9	14	(34°)
ø32	5.5	5.5	7.5	2.5	2.5	4.5	6.5	6.5	8.5	9.5	9.5	11.5	25.6	27.6	16	(30°)
ø40	7.5	7.5	9.5	4.5	4.5	6.5	8.5	8.5	10.5	11.5	11.5	13.5	30.2	32.1	16	(26°)
ø50	9.0	9.0	11.0	7.0	7.0	9.0	11.0	11.0	13.0	13.0	13.0	15.0	35.7	37.4	16	(22°)
ø63	9.0	9.0	11.0	7.0	7.0	9.0	11.0	11.0	13.0	13.0	13.0	15.0	42.7	44.4	16	(20°)

* Installation dimensions of the mounting are the same as those of SCM (double acting). Refer to pages 240 to 251.
* For the dimensions of the accessories, refer to pages 252 and 253.

MEMO

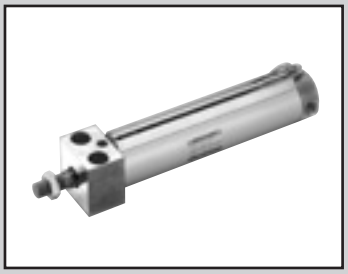

Round shaped cylinder
Double acting/direct mounting foot

SCM-LD Series

● Bore size:ø20/ø25/ø32/ø40/ø50/ø63

JIS symbol

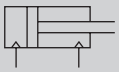

RoHS CAD

Specifications

Item	SCM-LD					
Bore size mm	ø20	ø25	ø32	ø40	ø50	ø63
Actuation	Double acting/direct mounting foot					
Working fluid	Compressed air					
Max. working pressure MPa	1.0 (≈150 psi, 10 bar)					
Min. working pressure MPa	0.1 (≈15 psi, 1 bar)				0.05 (≈7.3 psi, 0.5 bar)	
Proof pressure MPa	1.6 (≈230 psi, 16 bar)					
Ambient temperature °C	-10 (14°F) to 60 (140°F) (no freezing)					
Port size	Rc1/8				Rc1/4	
Stroke tolerance mm	+1.4 0				+2.3 0	
Working piston speed mm/s	30 to 1000 (Operate within the allowable absorbed energy.)					
Cushion	Rubber cushion					
Lubrication	Not required (use turbine oil ISO VG32 if necessary for lubrication)					
J Allowable absorbed energy J	0.1	0.2	0.5	0.9	1.6	1.6

Stroke

Bore size (mm)	Standard stroke (mm)	Max. stroke (mm)	Min. stroke (mm)
ø20	25, 50, 75 100, 125, 150 200, 250, 300	300	10
ø25			
ø32			
ø40			
ø50			
ø63			

*1: The custom stroke is available in 1 mm increments.

Number of installed switches and min. stroke (mm)

● Switch mounting: Rail

Switch quantity	1				2				3				4				5			
Bore size (mm)	Proximity			Reed	Proximity			Reed	Proximity			Reed	Proximity			Reed	Proximity			Reed
	T2, T3	T2W, T3W	T*Y*		T2, T3	T2W, T3W	T*Y*		T2, T3	T2W, T3W	T*Y*		T2, T3	T2W, T3W	T*Y*		T2, T3	T2W, T3W	T*Y*	
ø20	10				25				50	70	70	55	55	70	70	55	75	110	110	90
ø25	10				25				50	70	70	55	55	70	70	55	75	110	110	90
ø32	10				25				50	70	70	55	55	70	70	55	75	110	110	90
ø40	10				25				50	70	70	55	55	70	70	55	75	110	110	90
ø50	10				25				50	65	65	55	55	65	65	55	75	110	110	90
ø63	10				25				50	65	65	55	55	65	65	55	75	110	110	90

● Switch mounting: Band

Switch quantity	1				2				3				4				5			
Bore size (mm)	Proximity			Reed	Proximity			Reed	Proximity			Reed	Proximity			Reed	Proximity			Reed
	T2, T3	T2W, T3W	T*Y*		T2, T3	T2W, T3W	T*Y*		T2, T3	T2W, T3W	T*Y*		T2, T3	T2W, T3W	T*Y*		T2, T3	T2W, T3W	T*Y*	
ø20	10				25	30	35	25	50	55	55	50	75	75	80	70	95	100	100	95
ø25	10				25	30	35	25	50	55	55	50	75	75	80	70	95	100	100	95
ø32	10				25	30	35	25	50	55	55	50	75	75	80	70	95	100	100	95
ø40	10				25	30	35	25	50	55	55	50	75	75	80	70	95	100	100	95
ø50	10				25	30	35	25	50	55	55	50	75	75	80	70	95	100	100	95
ø63	10				25	30	35	25	50	55	55	50	75	75	80	70	95	100	100	95

*1: For types with one switch, when the stroke is between 10 and 24 mm, the trunnion mounting is not available since the switch rail mounting position is different. Refer to page 345 for mounting position.

Switch specifications

● 1-color/2-color LED

Item	2-wire proximity				3-wire proximity				2-wire reed							2-wire proximity
	T1H/ T1V	T2H/T2V/ T2JH/T2JV	T2YH/ T2YV	T2WH/ T2WV	T3H/ T3V	T3PH/ T3PV	T3YH/ T3YV	T3WH/ T3WV	T0H/T0V		T5H/T5V		T8H/T8V			T2YD (*4) T2YDT
Applications	For programming controller, relay, compact solenoid valve	Dedicated for programmable controller			For programmable controller, relay				For programmable controller, relay		For programmable controller, relay (no lamp), serial		For programmable controller, relay			Dedicated for programmable controller
Output method	-				NPN output	PNP output	NPN output	NPN output	-							
Pwr. supp. V.	-				10 to 28 VDC				-							
Load voltage	85 to 265 VAC	10 to 30 VDC		24 VDC ±10%	30 VDC or less				12/24 VDC	100/110 VAC	5/12/24 VDC	100/110 VAC	12/24 VDC	110 VAC	220 VAC	24 VDC ±10%
Load current	5 to 100 mA	5 to 20 mA (*3)			100 mA or less		50 mA or less		5 to 50 mA	7 to 20 mA	50 mA or less	20 mA or less	5 to 50 mA	7 to 20 mA	7 to 10 mA	5 to 20 mA
Indicator	LED (Lit when ON)	LED (Lit when ON)	Red/green LED (Lit when ON)	Red/green LED (Lit when ON)	LED (Lit when ON)	Yellow LED (Lit when ON)	Red/green LED (Lit when ON)	Red/green LED (Lit when ON)	LED (Lit when ON)		No indicator lamp		LED (Lit when ON)			Red/green LED (Lit when ON)
Leakage current	≤ 1 mA at 100 VAC, ≤ 2 mA at 200 VAC	1 mA or less			10 μA or less				0 mA							1 mA or less
Weight g	1 m:33 3 m:87 5 m:142	1 m:18 3 m:49 5 m:80	1 m:33 3 m:87 5 m:142	1 m:18 3 m:49 5 m:80	1 m:18 3 m:49 5 m:80		1 m:33 3 m:87 5 m:142	1 m:18 3 m:49 5 m:80	1 m:18 3 m:49 5 m:80				1 m:33 3 m:87 5 m:142			1 m:61 3 m:166 5 m:272

*1: Refer to Ending Page 1 for detailed switch specifications and dimensions.
*2: Switches other than the above models, such as switches with connectors, are also available. Refer to Ending Page 1.
*3 : Max. load current: 20 mA at 25°C. The current is lower than 20 mA if the operating ambient temperature around the switch is higher than 25˚C. (5 to 10 mA at 60°C)
*4 : Switch for AC magnetic field (T2YD/T2YDT) cannot be used in DC magnetic field.

Cylinder weight

(Unit: kg)

Item/mounting / Bore size (mm)	Weight when stroke (S) = 0 mm Basic	Switch weight (per 1 pc)	Additional weight per S = 10 mm	Additional weight per S = 10 mm (with rail)	Band weight per switch
ø20	0.14	Refer to the weight in the switch specifications.	0.010	0.012	0.007
ø25	0.22		0.014	0.016	0.007
ø32	0.34		0.018	0.020	0.007
ø40	0.56		0.030	0.032	0.007
ø50	1.04		0.044	0.046	0.008
ø63	1.46		0.052	0.054	0.009

(Example) Product weight of SCM-LD-40D-100-T2H-D
- Product weight when S = 0 mm ····· 0.56 kg
- Additional weight when S = 100 mm ····· 0.032 x $\frac{100}{10}$ =0.32 kg
- Weight of 2 switches ····· 0.036 kg
- Product weight ····· 0.56 kg + 0.32 kg + 0.036 kg=0.916 kg

Theoretical thrust table

(Unit: N)

Bore size (mm)	Operating direction	Working pressure MPa 0.05	0.1	0.15	0.2	0.3	0.4	0.5	0.6	0.7	0.8	0.9	1.0
ø20	Push	–	31.4	47.1	62.8	94.2	$1.26x10^2$	$1.57x10^2$	$1.88x10^2$	$2.20x10^2$	$2.51x10^2$	$2.83x10^2$	$3.14x10^2$
	Pull	–	26.4	39.6	52.8	79.2	$1.06x10^2$	$1.32x10^2$	$1.58x10^2$	$1.85x10^2$	$2.11x10^2$	$2.38x10^2$	$2.64x10^2$
ø25	Push	–	49.1	73.6	98.2	$1.47x10^2$	$1.96x10^2$	$2.45x10^2$	$2.95x10^2$	$3.44x10^2$	$3.93x10^2$	$4.42x10^2$	$4.91x10^2$
	Pull	–	41.2	61.9	82.5	$1.24x10^2$	$1.65x10^2$	$2.06x10^2$	$2.47x10^2$	$2.89x10^2$	$3.30x10^2$	$3.71x10^2$	$4.12x10^2$
ø32	Push	–	80.4	$1.21x10^2$	$1.61x10^2$	$2.41x10^2$	$3.22x10^2$	$4.02x10^2$	$4.83x10^2$	$5.63x10^2$	$6.43x10^2$	$7.24x10^2$	$8.04x10^2$
	Pull	–	69.1	$1.04x10^2$	$1.38x10^2$	$2.07x10^2$	$2.76x10^2$	$3.46x10^2$	$4.15x10^2$	$4.84x10^2$	$5.53x10^2$	$6.22x10^2$	$6.91x10^2$
ø40	Push	–	$1.26x10^2$	$1.88x10^2$	$2.51x10^2$	$3.77x10^2$	$5.03x10^2$	$6.28x10^2$	$7.54x10^2$	$8.80x10^2$	$1.01x10^3$	$1.13x10^3$	$1.26x10^3$
	Pull	–	$1.06x10^2$	$1.58x10^2$	$2.11x10^2$	$3.17x10^2$	$4.22x10^2$	$5.28x10^2$	$6.33x10^2$	$7.39x10^2$	$8.44x10^2$	$9.50x10^2$	$1.06x10^3$
ø50	Push	98.0	$1.96x10^2$	$2.95x10^2$	$3.93x10^2$	$5.89x10^2$	$7.85x10^2$	$9.82x10^2$	$1.18x10^3$	$1.37x10^3$	$1.57x10^3$	$1.77x10^3$	$1.96x10^3$
	Pull	82.5	$1.65x10^2$	$2.47x10^2$	$3.30x10^2$	$4.95x10^2$	$6.60x10^2$	$8.25x10^2$	$9.90x10^2$	$1.15x10^3$	$1.32x10^3$	$1.48x10^3$	$1.65x10^3$
ø63	Push	$1.56x10^2$	$3.12x10^2$	$4.68x10^2$	$6.23x10^2$	$9.35x10^2$	$1.25x10^3$	$1.56x10^3$	$1.87x10^3$	$2.18x10^3$	$2.49x10^3$	$2.81x10^3$	$3.12x10^3$
	Pull	$2.40x10^2$	$2.80x10^2$	$4.20x10^2$	$5.61x10^2$	$8.41x10^2$	$1.12x10^3$	$1.40x10^3$	$1.68x10^3$	$1.96x10^3$	$2.24x10^3$	$2.52x10^3$	$2.80x10^3$

SCP*3
CMK2
CMA2
SCM
SCG
SCA2
SCS2
CKV2
CAV2/COVP/N2
SSD2
SSG
SSD
CAT
MDC2
MVC
SMG
MSD/MSDG
FC*
STK
SRL3
SRG3
SRM3
SRT3
MRL2
MRG2
SM-25
ShkAbs
FJ
FK
Spd Contr
Ending

How to order

No switch (built-in magnet for switch)

SCM-LD - 40 ( ) D - 100 ——— M I

With switch (built-in magnet for switch)

SCM-LD - 40 ( ) D - 100 - T0H - D - ( ) M I

Ⓐ Mounting
Ⓑ Bore size
Ⓒ Port thread
Ⓓ Cushion
Ⓔ Stroke
Ⓕ Switch model No. *2 *3
Ⓖ Switch quantity
Ⓗ Switch mounting
Ⓘ Option *5
Ⓙ Accessory *6

Code	Description
Ⓐ Mounting	
LD	Direct mounting foot

Ⓑ Bore size (mm)	
20	ø20
25	ø25
32	ø32
40	ø40
50	ø50
63	ø63

Ⓒ Port thread	
Blank	Rc thread
N	NPT thread (made-to-order product)
G	G thread (made-to-order product)

Ⓓ Cushion	
D	With two-sided rubber cushion

Ⓔ Stroke (mm)

Bore size	Stroke *1	Custom stroke
ø20 to ø63	10 to 300	In 1 mm increments

Ⓕ Switch model No.

Axial lead wire	Radial lead wire	Contact	Voltage AC	Voltage DC	Indicator	Lead wire
T0H*	T0V*	Reed	●	●	1-color LED	2-wire
T5H*	T5V*	Reed	●	●	No indicator lamp	2-wire
T8H*	T8V*	Reed	●	●	1-color LED	2-wire
T1H*	T1V*	Proximity	●		1-color LED	2-wire
T2H*	T2V*	Proximity		●	1-color LED	2-wire
T3H*	T3V*	Proximity		●	1-color LED	3-wire
T3PH*	T3PV*	Proximity		●	1-color LED	3-wire
T2WH*	T2WV*	Proximity		●	2-color LED	2-wire
T2YH*	T2YV*	Proximity		●	2-color LED	2-wire
T3WH*	T3WV*	Proximity		●	2-color LED	3-wire
T3YH*	T3YV*	Proximity		●	2-color LED	3-wire
T2YD*	-	Proximity		●	2-color LED AC magnetic field	2-wire
T2YDT*	-	Proximity		●	2-color LED AC magnetic field	2-wire
T2JH*	T2JV*	Proximity		●	1-color LED off-delay	2-wire

*** Lead wire length**	
Blank	1 m (standard)
3	3 m (option)
5	5 m (option)

Ⓖ Switch quantity	
R	1 on rod side
H	1 on head side
D	2
T	3
4	4 (when there are more than 4 switches, indicate switch quantity.)

Ⓗ Switch mounting	
Blank	Rail method
Z	Band method

Ⓘ Option	
Q	Switch rail included at shipment
M	Piston rod material (stainless steel)
P6	Copper and PTFE free (made-to-order product)

Ⓙ Accessory	
I	Rod eye
Y	Rod clevis (pin and snap ring included)

⚠ Precautions for model No. selection

*1 : Refer to page 340 for the min. stroke with switch.
*2 : Switches other than Ⓕ Switch model No. are also available. (Made to order)
Refer to Ending Page 1 for details.
*3 : T8H/V switches cannot be mounted when the bore size is from ø20 to ø40 and the switch mounting style is the rail.
*4 : Refer to Ending Page 85 for custom specifications of rod end form.
*5 : "Q" (switch rail enclosed at shipment) is not available for the "Z" switch mounting.
*6 : "I" and "Y" cannot be selected together.
*7 : Switches are shipped with the product. Contact CKD if assembling before shipment is necessary.

[Example of model No.]

SCM-LD-40D-100-T0H-D-MI

Model: Round shaped cylinder double acting/direct mounting foot

Ⓐ Mounting : Direct mounting foot
Ⓑ Bore size : ø40 mm
Ⓒ Port thread : Rc thread
Ⓓ Cushion : With two-sided rubber cushion
Ⓔ Stroke : 100 mm
Ⓕ Switch model No. : Reed T0H switch, lead wire 1 m
Ⓖ Switch quantity : 2
Ⓗ Switch mounting : Rail
Ⓘ Option : Piston rod material (stainless steel)
Ⓙ Accessory : Rod eye

How to order switch

[Switch mounting: Rail]

● Switch body + mounting rail set

SCM - T0H - D - 40 - 100

- T0H: Switch model No. (Item Ⓕ on page 342)
- D: Switch quantity (Item Ⓖ on page 342)
- 40: Bore size (Item Ⓑ on page 342)
- 100: Stroke (*1) (Item Ⓔ on page 342)

● Mounting rail only

SCM - T - 40 - 100

- T: Mounting rail
- 40: Bore size (Item Ⓑ on page 342)
- 100: Stroke (*2) (Item Ⓔ on page 342)

(*1)

*1: Indicate X if the stroke exceeds 300 mm.
If exceeding 300 mm, a short rail (with 100 mm switch adjustment length) will be included per switch.
*2: If indicating X when ordering mounting rails only, order the same number of rails as that of applicable switches.

[Switch body only]

SW - T0H

- T0H: Switch model No. (Item Ⓕ on page 342)

[Switch mounting: Band]

● Switch body + mounting bracket set + band

SCM - T2H* - 40 - Z

- T2H*: Switch model No. (Item Ⓕ on page 342)
- 40: Bore size (Item Ⓑ on page 342)

● Mounting bracket set + band

SCM - Z - 40

- 40: Bore size (Item Ⓑ on page 342)

Internal structure

Same as standard. Refer to page 236.

SCP*3
CMK2
CMA2
SCM
SCG
SCA2
SCS2
CKV2
CAV2/COVP/N2
SSD2
SSG
SSD
CAT
MDC2
MVC
SMG
MSD/MSDG
FC*
STK
SRL3
SRG3
SRM3
SRT3
MRL2
MRG2
SM-25
ShkAbs
FJ
FK
Spd Contr
Ending

Dimensions CAD

● Double acting/direct mounting foot

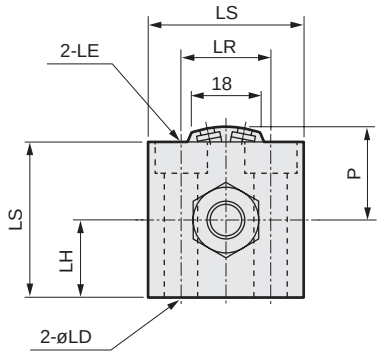

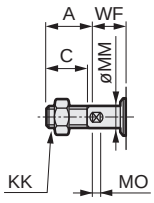

ø20/ø25

• Switch mounting: Rail

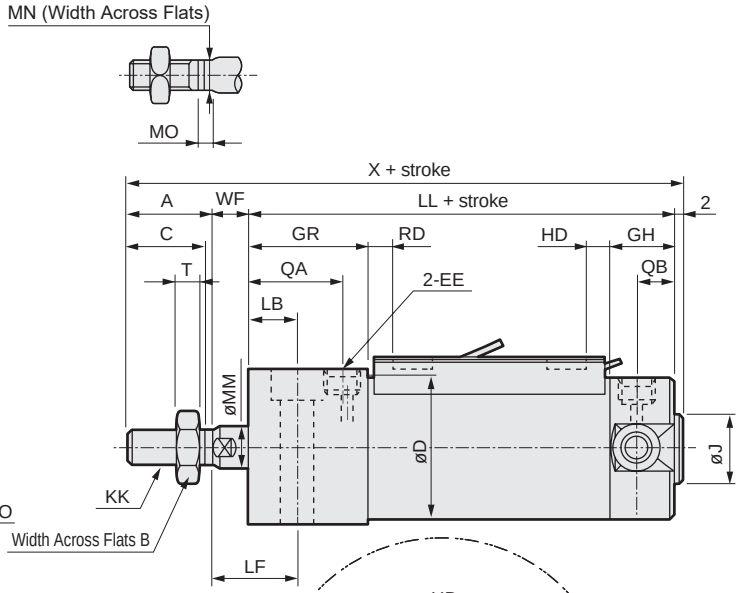

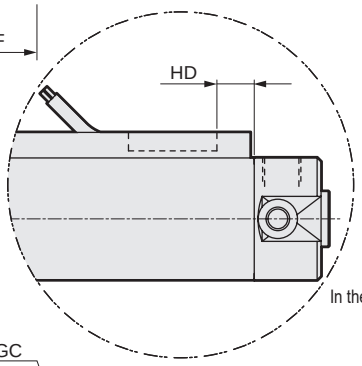

In the case of T2W, T3W

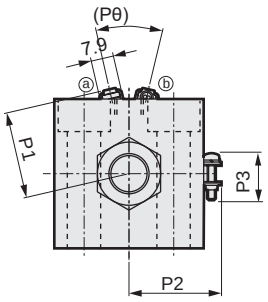

• Switch mounting: Band

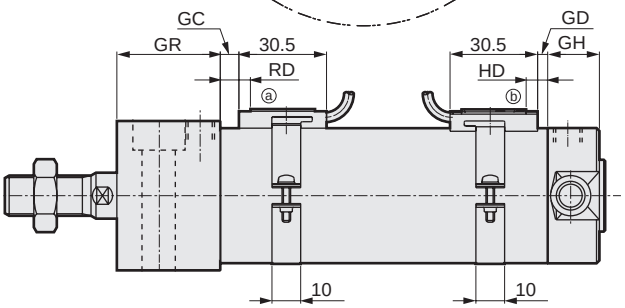

***1: Refer to page 345 for RD, HD and protruding dimensions of the 2-color LED, off-delay, AC magnetic field proof, T1H/V and T8H/V switches.**

Code	Basic (00) Basic dimensions																							
Bore size (mm)	A	B	C	D	EE	GH	GR	J	KK	LL	MM	MN	MO	QA	QB	T	WF	X	LB	LD	LE	LF	LH	LR
ø20	18	13	16	26	Rc1/8	17	27	12	M8	77	8	6	4	20	10	5	9	106	11	5.5	9.5 spot face depth 5.4	20	15	18
ø25	22	17	20	31	Rc1/8	17	27	14	M 10 x 1.25	77	10	8	5	20	10	6	10	111	12	6.6	11 spot face depth 6.5	22	18	22
ø32	22	17	20	38	Rc1/8	17	32	18	M 10 x 1.25	84	12	10	5.5	25	10	6	10	118	13	9	14 spot face depth 8.6	23	21	24
ø40	30	22	27	47	Rc1/8	19	36	25	M 14 x 1.5	94	16	14	6	29	12	8	9	135	16	11	17.5 spot face depth 10.8	25	26	32
ø50	35	27	32	58	Rc1/4	22	43	30	M 18 x 1.5	108	20	17	8	33	12	11	10	155	17	14	20 spot face depth 13	27	32	41
ø63	35	27	32	72	Rc1/4	22	48	32	M 18 x 1.5	113	20	17	8	38	12	11	10	160	19	18	26 spot face depth 17.5	29	38	46

Code		Switch mounting: Rail							Switch mounting: Band															
Bore size (mm)	LS	P	HD			RD			GC			GD			HD			RD			P1	P2	P3	Pθ
			T0/T5	T2/T2R T3/T3P	T2W T3W	T0/T5	T2/T2R T3/T3P	T2W T3W	T0/T5	T2,T3	T2W T3W	T0/T5	T2,T3	T2W T3W	T0/T5	T2,T3	T2W T3W	T0/T5	T2,T3	T2W T3W				
ø20	30	19.5	3.0	6.5	8.5	7.5	7.5	9.5	3.5	3.5	5.5	2.5	2.5	4.5	6.5	6.5	8.5	7.5	7.5	9.5	19.6	21.5	14	(38°)
ø25	36	22	2.0	5.5	7.5	8.5	8.5	10.5	4.5	4.5	6.5	1.5	1.5	3.5	5.5	5.5	7.5	8.5	8.5	10.5	22.1	23.9	14	(34°)
ø32	42	25.5	3.0	6.5	8.5	9.5	9.5	11.5	5.5	5.5	7.5	2.5	2.5	4.5	6.5	6.5	8.5	9.5	9.5	11.5	25.6	27.6	16	(30°)
ø40	52	30	5.0	8.5	10.5	11.5	11.5	13.5	7.5	7.5	9.5	4.5	4.5	6.5	8.5	8.5	10.5	11.5	11.5	13.5	30.2	32.1	16	(26°)
ø50	64	35.5	7.5	11.0	13.0	13.0	13.0	15.0	9.0	9.0	11.0	7.0	7.0	9.0	11.0	11.0	13.0	13.0	13.0	15.0	35.7	37.4	16	(22°)
ø63	76	42.5	7.5	11.0	13.0	13.0	13.0	15.0	9.0	9.0	11.0	7.0	7.0	9.0	11.0	11.0	13.0	13.0	13.0	15.0	42.7	44.4	16	(20°)

* For the dimensions of the accessories, refer to pages 252 and 253.

Switch rail installation position (rail installation position for stroke of 10 mm and over and less than 25 mm with 1 switch)

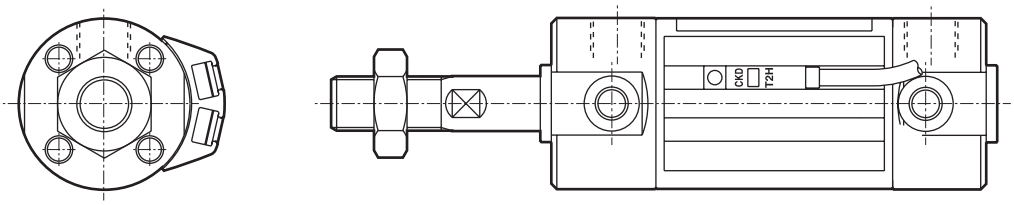

1. The switch rail is mounted at the position inclined by 90˚ from the standard position.
2. Trunnion mounting is not available because the switch rail and the bracket interfere with each other.
3. When combining one cylinder with stroke of 10 and over and less than 25 and the other one with stroke of 25 and over for variations B and W, the installation position of the switch rail is as shown in the figure above such that the cylinders 1 and 2 are placed at 90˚ to each other.

Switch mounting: Rail 2-color LED, AC magnetic field, off-delay, T1H/V, T8H/V switches mounted, dimensions of protruding section

● SCM-* T2YH/V, T3YH/V, T2JH/V, T8H/V

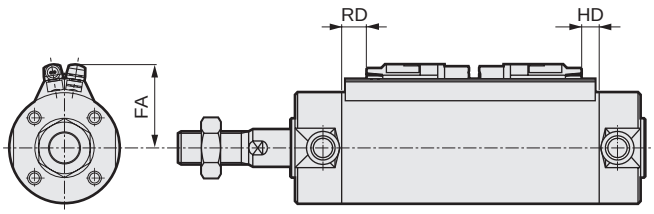

● SCM-* T2YD*, T1H/V

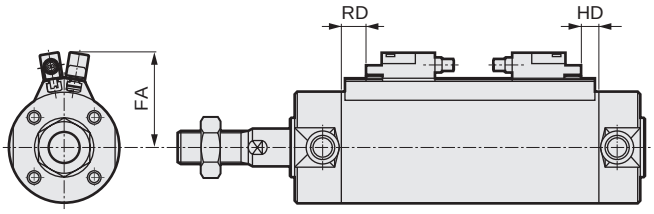

Bore size (mm)	FA				RD		HD	
	T*YH, T8H T2JH	T*YV, T8V T2JV	T2YD*, T1H	T1V	T*YH/V, T1H/V, T2JH/V, T2YD*	T8H/V	T*YH/V, T1H/V, T2JH/V, T2YD*	T8H/V
ø20	24	27	29.5	32.5	6.5	1.5	5.5	0.5
ø25	26.5	29.5	32	35	7.5	2.5	4.5	0
ø32	30	33	35.5	38.5	8.5	3.5	5.5	0.5
ø40	34.5	37.5	40	43	10.5	5.5	7.5	2.5
ø50	40	43	45.5	48.5	12	7	10	5
ø63	47	50	52.5	55.5	12	7	10	5
ø80	55.5	58.5	61	64	19	14	12	7
ø100	66	69	71.5	74.5	18.5	13.5	12.5	7.5

Switch mounting: Band 2-color LED switches mounted, AC magnetic field, off-delay, T1H/V, T8H/V switches, dimensions of protruding section

● SCM-* T2YH/V, T3YH/V, T2YH/V, T8H/V

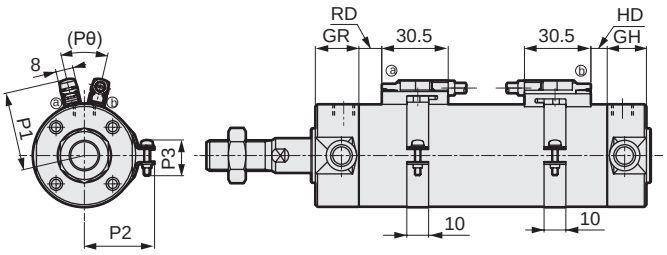

● SCM-* T2YD*, T1H/V

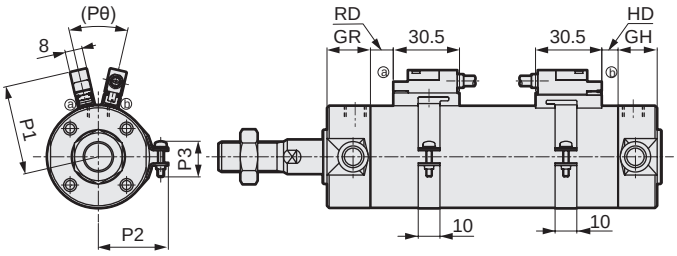

Bore size (mm)	P1				RD		HD	
	T*YH, T8H T2JH	T*YV, T8V T2JV	T2YD*, T1H	T1V	T*YH/V, T1H/V, T2JH/V, T2YD*	T8H/V	T*YH/V, T1H/V, T2JH/V, T2YD*	T8H/V
ø20	25.4	28.4	30.4	33.4	6.5	1.5	5.5	0.5
ø25	27.9	30.9	32.9	35.9	7.5	2.5	4.5	0
ø32	31.4	34.4	36.4	39.4	8.5	3.5	5.5	0.5
ø40	36	39	41	44	10.5	5.5	7.5	2.5
ø50	41.5	44.5	46.5	49.5	12	7	10	5
ø63	48.5	51.5	53.5	56.5	12	7	10	5
ø80	57	60	62	65	19	14	12	7
ø100	67.5	70.5	72.5	75.5	18.5	13.5	12.5	7.5

Pneumatic components

Safety Precautions

Be sure to read this section before use.

Refer to Intro Page 73 for general information of the cylinder, and to Intro Page 80 for general information of the cylinder switch.

Product-specific cautions: Round shaped cylinder SCM Series

Design/selection

1. Common

CAUTION

■ As a cushion mechanism integrated in the cylinder, the rubber cushion and the air cushion are available. The purpose of the air cushion is to absorb the piston's kinetic energy by using air compressibility, avoiding collisions of piston and cover at the stroke end. Thus, the cushion is not used to decelerate the piston speed (deceleration action) near the stroke end. The following table shows the kinetic energy that can be absorbed by the cushion. If the kinetic energy exceeds these values, or if bounding caused by the air compressibility is to be avoided, use a separate buffer.

Bore size (mm)	Rubber cushion	Air cushion	
	Allowable absorbed energy J	Effective cushion length (mm)	Allowable absorbed energy J
ø20	0.1	8.1	0.8
ø25	0.2	8.1	1.2
ø32	0.5	8.6	2.5
ø40	0.9	8.6	3.7
ø50	1.6	13.4	8.0
ø63	1.6	13.4	14.4
ø80	3.3	15.4	25.4
ø100	5.8	15.4	45.6

Kinetic energy (J) =

$$\frac{1}{2} \times \text{Weight (kg)} \times \{\text{Speed (m/s)}\}^2$$

(Note) Calculating kinetic energy

Average cylinder speed is obtained with $Va = \frac{L}{T}$.

Va : Average speed (m/s)
L : Cylinder stroke (m)
T : Operating time (s)

With respect to this, the cylinder speed just before rushing into the cushion can be obtained with the following simple formula.

$$Vm = \frac{L}{T} \times \left(1 + 1.5 \times \frac{\omega}{100}\right)$$

Vm : Stroke end speed (m/s)
ω : Cylinder load factor (%)

Use this Vm value as speed to calculate kinetic energy.

2. Fine speed SCM-F

CAUTION

■ Do not lubricate. It will cause the properties to fluctuate.

■ Assemble the speed controller near the cylinder.
When installed far from the cylinder, the speed becomes unstable. Use the SC-M3/M5, SC3W, SCD-M3/M5 or SC3U Series speed controller.

■ In general, the speed is stabler at higher air pressure and lower load factor.
Use at a 50% or less load factor.

■ Stable speed control is achieved with a meter-out circuit.
When fine speed activation is performed with operating direction PUSH for the single rod cylinder, the popping out phenomenon occurs when operation starts if the load resistance is low. For countermeasures, use the ⓑ, ⓒ or ⓓ circuit. Note that the ⓓ circuit is the most stable.

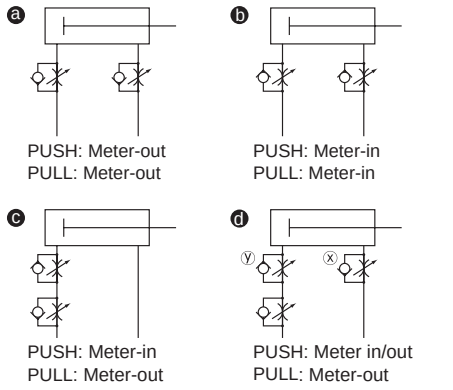

Speed adjustment method for PUSH operation of ⓓ circuit:
1. Set the speed with the speed controller x.
2. Restrict the speed with the speed controller y until there is no popping out.
3. Check the speed again.

(*1) When comparing ⓑ, ⓒ and ⓓ, the ⓓ circuit is the most stable.

(*2) For vertical mounting, combine the cylinder with a meter-out circuit, as it will fall under its own weight when a meter-in circuit is used.

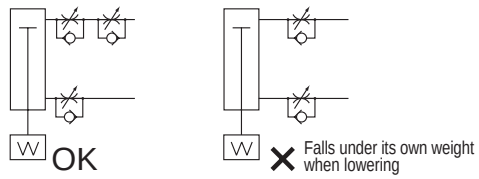

(*3) Use the circuit shown in the figure below for the serial connection of the speed controllers.

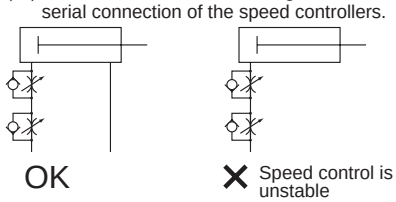

Design/selection

(Guidelines for pop-out generation)
Popping out occurs in the following cases.
· Thrust > Resistance

* Resistance: Thrust caused by residual pressure on the exhaust side (in the fine speed, suction pressure = residual pressure) + { When using horizontally: frictional force caused by load / When using vertically: load self-weight

■ Do not apply a lateral load to the cylinder.
With a lateral load, operation will become unstable.

■ Avoid using this product where vibration is present.
The product will be adversely affected by vibration and operation will become unstable.

3. Low friction SCM-U

⚠ WARNING

■ Durability differs based on working conditions and model characteristics.
This cylinder is a cylinder that has internal leakage.
Refer to specifications (page 302) for amount of leakage.

⚠ CAUTION

■ Mount a speed controller on the cylinder.
Mount the speed controller on the cylinder.
Use each cylinder within the applicable working piston speed range. However, when using the cylinder for a balancer, etc., it may be advisable not to mount a speed controller in order to improve the supply and exhaust efficiency.
Depending on applications, circuits ⓐ to ⓒ below are recommended.

ⓐ Tension control (winding machine, etc.) ⓑ Balancer (processing machine Z-axis, etc.)

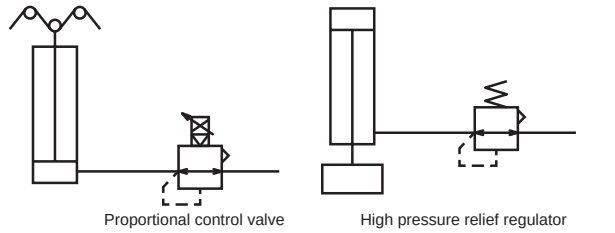

ⓒ Load control (grinding, etc.)

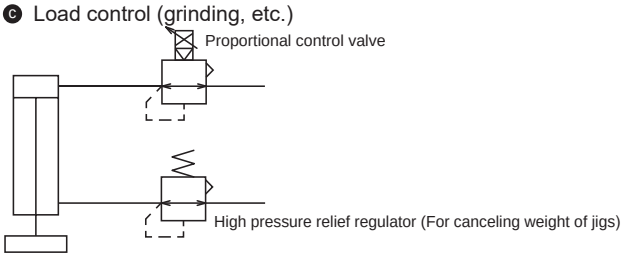

* To improve the supply and exhaust efficiency, make the volume of piping as large as possible.

■ Do not lubricate. The properties fluctuate.

■ Because poor quality air worsens the characteristics and adversely affects the durability, use clean air with the piping below.

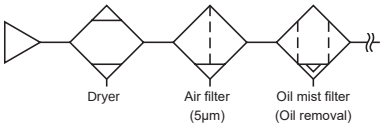

■ Assemble the speed controller near the cylinder.
When installed at a distant place from the cylinder, the adjustment becomes unstable.

■ In general, the speed is stabler at higher air pressure and lower load factor.
Use at a 50% or less load factor.

4. Position locking SCM-Q

⚠ WARNING

■ If pressure is supplied to port Ⓐ when both ports are not pressurized and the piston is locked, the lock may not be released or the piston rod may suddenly pop out just after the lock is released. This can be extremely hazardous. To release the locking mechanism, be sure to supply pressure to port Ⓑ. Check that a load is not applied to the locking mechanism upon release.

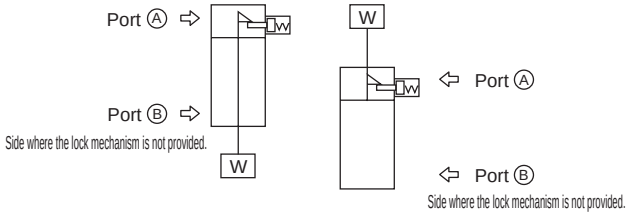

■ For usage where the drop rate is increased using the quick exhaust valve, the lock may not release normally because the cylinder body starts operating before the lock pin. For the position locking cylinder, do not use the quick exhaust valve.

■ Do not use 3-position valves.
Do not use the cylinder by combining with the 3-position (especially, closed center metal seal) valves. If the port at the side where the lock mechanism is provided is pressurized, the lock cannot be engaged. Even if it is locked once, the air leaked from the valve enters the cylinder, and the lock may be released after a certain period of time.

⚠ CAUTION

■ Cylinder load factor must be 50% or less.
If the load factor is high, the lock may not be released, or the lock section may be damaged.

■ If back pressure is applied to the locking mechanism, the lock may be released. Use a single valve, or an individual exhaust manifold.

■ Do not use multiple synchronized cylinders.
Do not use so that 1 workpiece is moved by synchronizing 2 or more position locking cylinders. Cylinder lock release may fail.

Mounting, installation and adjustment

1. Common

⚠ CAUTION

■ Switch rails are adhered with industrial adhesive tape. If used in an atmosphere containing inorganic or organic solvents or water vapor, rails may become loose.
Main inorganic solvent/organic solvent
Inorganic solvents : Sodium hydroxide, hydrochloric acid, etc.
Organic solvents : Toluene, ethanol, hexane, gasoline, kerosene, etc.

■ Remove all oil, moisture, dust, etc., from the body (tube) in order to adhere the switch rail.
(Perform adhesion by referring to instructions included with the part.)

■ Caution for type with air cushion
For ø20 and ø25, compatible fittings are limited, so see the following table to select the fitting.

Item	Port size	Applicable fittings		Inapplicable fittings
ø20	M5	SC3W-M5-4/6		GWL6-M5
		SC3R-M5		
		GWS4-M5	GWS4-M5-S	
		GWS6-M5	GWS6-M5-S	GWL6-M5-45
ø25		GWL4-M5	GWL4-M5-45	
		GWL4-M5-T	GWL6-M5-T	

■ Switch mounting: Caution for band

● When moving the switch position to the stroke direction
The 1-color LED switch can be fine-tuned by ±3 mm from the default. Loosen the switch fixing screw, shift the switch along the rail, then tighten at the specified position. If the adjusting range exceeds ±3 mm, or when fine-tuning the 2-color LED switch, move the band position. When using T2, T3, T0, or T5, use a flathead screwdriver (clockwork screwdriver, precision screwdriver, etc.) with a grip diameter of 5 to 6 mm, a 2.4 mm or smaller tip, and a thickness of 0.3 mm or less to tighten the screws with a tightening torque of 0.1 to 0.2 N·m. When using T2J, T2Y, or T3Y, tighten the screw with a tightening torque of 0.5 to 0.7 N·m. The switch bracket rail has a marking 4 mm from the rail end. Use as a guide to the mounting position when replacing the switch. Switch rail markings are set to the default switch max. sensitivity position. The max. sensitivity position will change when the switch is changed or when the band is shifted. Adjust the position accordingly in this case.

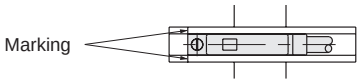

● If moving the switch position in the circumferential direction, loosen the band fixing screw, shift the switch rail in the circumferential direction, then tighten at the specified position. Tightening torque is 0.6 to 0.8 N·m.

● Shifting the band position
Loosen the band fixing screw, shift the switch rail and band along the cylinder tube, and tighten at the specified position. Tightening torque is 0.6 to 0.8 N·m.

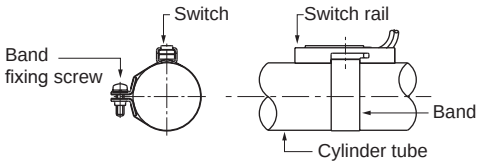

■ When the mounting style is the trunnion, preassemble it as shown in the figure below and tighten the bolt using the tightening torque with reference to the table below.

Bore size	Tightening torque [N·m]
ø20	6
ø25	11
ø32	18
ø40	27
ø50	38
ø63	51

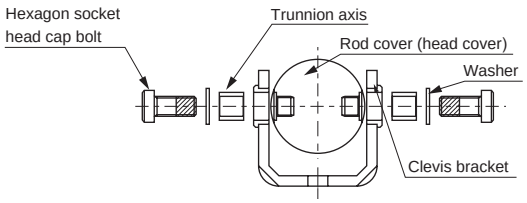

2. Stroke adjustable SCM-R

⚠ CAUTION

■ Securely lock the adjustable stroke stopper with the lock nut.

■ Observe steps (1) to (5) when adjusting the stroke. If adjustments are not made this way, the seal washer will be damaged after one or two adjustments

[Adjustable stroke procedure]

(1) First loosen the lock nut as shown in Fig. 1.

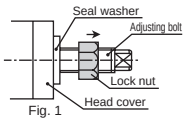

Fig. 1

(2) Second, remove the seal washer from the adaptor by hand, and make a state as shown in Fig. 2.

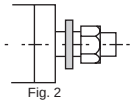
Fig. 2

(3) Turn the angle adjustment bolt, lock nut, and seal washer together in the (2) state as shown in Fig. 3, and adjust the stroke. Check that the rubber section of the seal washer does not bite into the thread part.

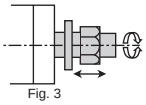
Fig. 3

(4) After adjusting the stroke, move the seal washer near the adaptor by hand as shown in Fig. 4.

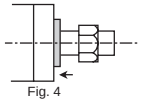
Fig. 4

(5) Tighten securely with the lock nut as shown in Fig. 5. Check that the rubber section of the seal washer does not bite into the thread part.

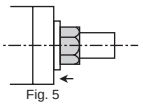
Fig. 5

Securely tighten the lock nut after adjusting the stroke. The lock nut could be loosened in the course of usage, and this may result in external leakage.

- Because a seal washer is used for sealing the adjustment bolt, the sealing cannot withstand frequent adjustment.
- If the stroke is adjusted, the cushion cannot function at all.
- 2 types of 25 mm and 50 mm are available for adjustment stroke.
- When the mounting style is the axial foot, the axial pitch dimension is the same as the standard.

3. Position locking SCM-Q

⚠ CAUTION

- For the axial foot (mounting style: LB), when trying to fix the cylinder to a support, etc., with the state that the mounting bracket is attached to the cylinder, the cylinder cannot be fixed because the bolt and the stopper cover will interfere with each other. Fix the mounting bracket at the position locking side to the support, etc., first, and then mount the cylinder.
- The lock mechanism functions at the stroke end, so that if the stopper is engaged during the stroke by the external stopper, the lock mechanism may not work and the piston could fall. When setting a load, make sure to check that the lock mechanism functions before installing the product.
- Supply pressure equal to or higher than the min. working pressure to the port on the lock mechanism side.
- When the piping at the side where the lock mechanism is provided is long and thin, or when the speed controller is far away from the cylinder port, note that it takes time to engage the lock. Clogging in the silencer mounted on the EXH port of the valve may cause the same result.
- Manual operation unlocking method
  By screwing the bolt (ø20 to 32: M3X30 and over, ø40 to 100: M4X35 and over) into the stopper piston and pulling the bolt 2 mm (ø20 to 32) or 4 mm (ø40 to 100) with force of 20 N or more, the stopper piston is moved and the lock is released.
  When released, the stopper piston is returned to the original position by the built-in spring and engaged in the sleeve groove, and the cylinder is locked.

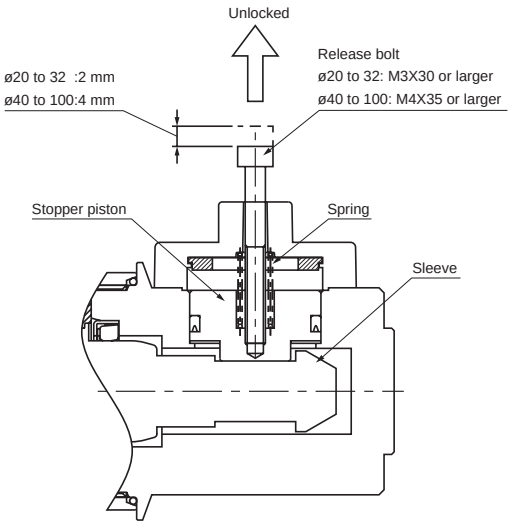

4. Fine speed SCM-F

⚠ CAUTION

- Perform adjustment such as centering so that a lateral load is not applied to the cylinder.
  Adjust and install the sliding guide so that it is not twisted.
  - When the load or the resistance fluctuates, operation becomes unstable.
  - With a large difference between static friction and kinematic friction of the guide, operation becomes unstable.

5. Low friction cylinder SCM-U

⚠ CAUTION

- Perform adjustment such as centering so that lateral load is not applied to the cylinder.
  Adjust and install the sliding guide so that it is not twisted.
  - When the load or the resistance fluctuates, operation becomes unstable.
  - For the long stroke, the piston rod's self-weight causes the speed to become unstable. Install the guide before use.
  - With a large difference between the guide's static friction and kinematic friction, operation becomes unstable.
- Avoid using this product where vibration is present.
  - The product will be adversely affected by vibration and operation will be unstable.
- Avoid using in environments with water vapor or high humidity or in alkaline atmospheres.

6. Rotation-stop SCM-M

⚠ CAUTION

- Do not use the product so as to apply rotation torque to the piston rod.
  The bushing for the rotation lock may deform and significantly shorten the service life.
  When inevitable, use within the allowable torque range.

Allowable torque	ø20	ø25	ø32	ø40	ø50	ø63
N·m	0.2	0.25	0.25	0.45	0.45	0.45

- Do not apply rotation torque with impact, or with instantaneous changes in torque load direction.
- When fixing a workpiece onto the tip of the piston rod, retract the piston rod to the stroke end and apply a wrench to the protruding width across flats. Tighten so that torque is not applied to the cylinder body.

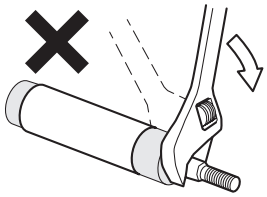

Use/maintenance

1. Common

⚠ CAUTION

- When disassembling the cylinder, grip the width across flats portion of either of the head cover or the rod cover with a vice, etc., apply a wrench or an adjustable wrench to the width across flats portion of the other cover and loosen it to remove the cover.
  When tightening it again, retighten from the position set before disassembly.
- A larger torque is required for disassembling and assembling the ø80 and ø100 cylinders.
  Contact your nearest CKD sales office for details, which are described in the instructions for assembling and disassembling.

2. Single acting SCM-X/Y

⚠ CAUTION

- Do not leave the single acting cylinder pressurized. If it is left pressurized for long periods, the piston rod may not return due to spring load when the pressure is released.

3. Position locking SCM-Q

⚠ WARNING

- For safety purposes, prevent the load from falling under its own weight during maintenance.
- In the case of the cylinder with air cushion, if the air cushion needle at the lock mechanism side is tightened excessively, the piston bounds at the stroke end and the sleeve and stopper piston collide strongly, which may result in damage to the locking mechanism. Also, if the air cushion needle is opened too much, the piston bounces off at the stroke end, which may similarly damage the mechanism. Adjust the needle of the air cushion so that there is no bound.

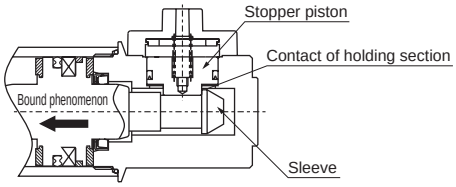

When stopping the piston with an external buffer device (shock absorber, etc.), adjust it similarly so that there is no bound.
Inspect the piston once or twice a year to make sure there is no damage to the retainer caused by this phenomenon.

⚠ CAUTION

- After the lock mechanism is manually operated, make sure to return the lock mechanism to the original state before use. Do not perform manual operation except for adjustment, as it is dangerous.
- When mounting or adjusting the cylinder, release the lock.
  If mounting work, etc., is done while the lock is engaged, the lock part may be damaged.
- Use the speed controller with meter-out.
  If the meter-in control is used, the lock may not be able to be released.
- At the side where the lock mechanism is attached, be sure to use the cylinder from the stroke end.
  If the cylinder piston does not reach the stroke end, the lock may not be engaged or the lock may not be able to be released.

4. Fine speed SCM-F

⚠ WARNING

- Smoking with hands smeared with the fluorine grease used could generate harmful gases and cause physical harm.

5. Low friction SCM-U

⚠ CAUTION

- Do not disassemble the product. Once disassembled, the performance may not be retained. For this product, just the repair parts are not available.

SCG

Tie rod cylinder

ø32/ø40/ø50/ø63/ø80/ø100

Standard

Overview

Standard cylinders with medium bore size (ø32 to ø100). The covers fixed with tie rod on both sides have enhanced durability. Suitable for all applications with reliable performance and a wide variety of options.

Features

Tie rod general purpose cylinder
The air supply/exhaust ports and cushion needle are positioned on the same surface. Tie rod general purpose cylinder with easy mounting and adjustment.

Compact switch equipped
T-switch is smaller than conventional. An additional switch can be mounted with the built-in magnet included as standard.

Wide variety of options and variations
Plentiful variations including position locking, anti-rotation, and heavy duty scraper are available. Designing the layout is simple since the functions relying on a built-in scraper, such as the anti-spatter adherence type and rubber scraper, have the same dimensions as those of the standard.

CONTENTS

Product introduction	352
Series variation	354
Variation and option combination selection table	356
● Double acting/single rod (SCG)	358
● Double acting/position locking (SCG-Q)	374
● Double acting/low speed (SCG-O)	396
● Double acting/low friction (SCG-U)	402
● Double acting/double rod (SCG-D)	406
● Double acting/rotation-stop (SCG-M)	412
● Double acting/rubber scraper (SCG-G)	418
● Double acting/coolant proof (SCG-G2, G3)	424
● Double acting/anti-spatter adherence (SCG-G4)	430
SCG Series switch common installation dimensions	436
SCG Series common accessory dimensions	372
⚠ Safety precautions	438

The cylinder switches T2YH, T2YV, T3YH, and T3YV are scheduled for end of production at the end of December 2023.

New eco-friendly

New easy-to-use SCG Series (ø32 to ø100)

Port and needle on the same side

Air supply/exhaust port and cushion needle installation on the same side. Cylinder installation/adjustment, etc., are easier.

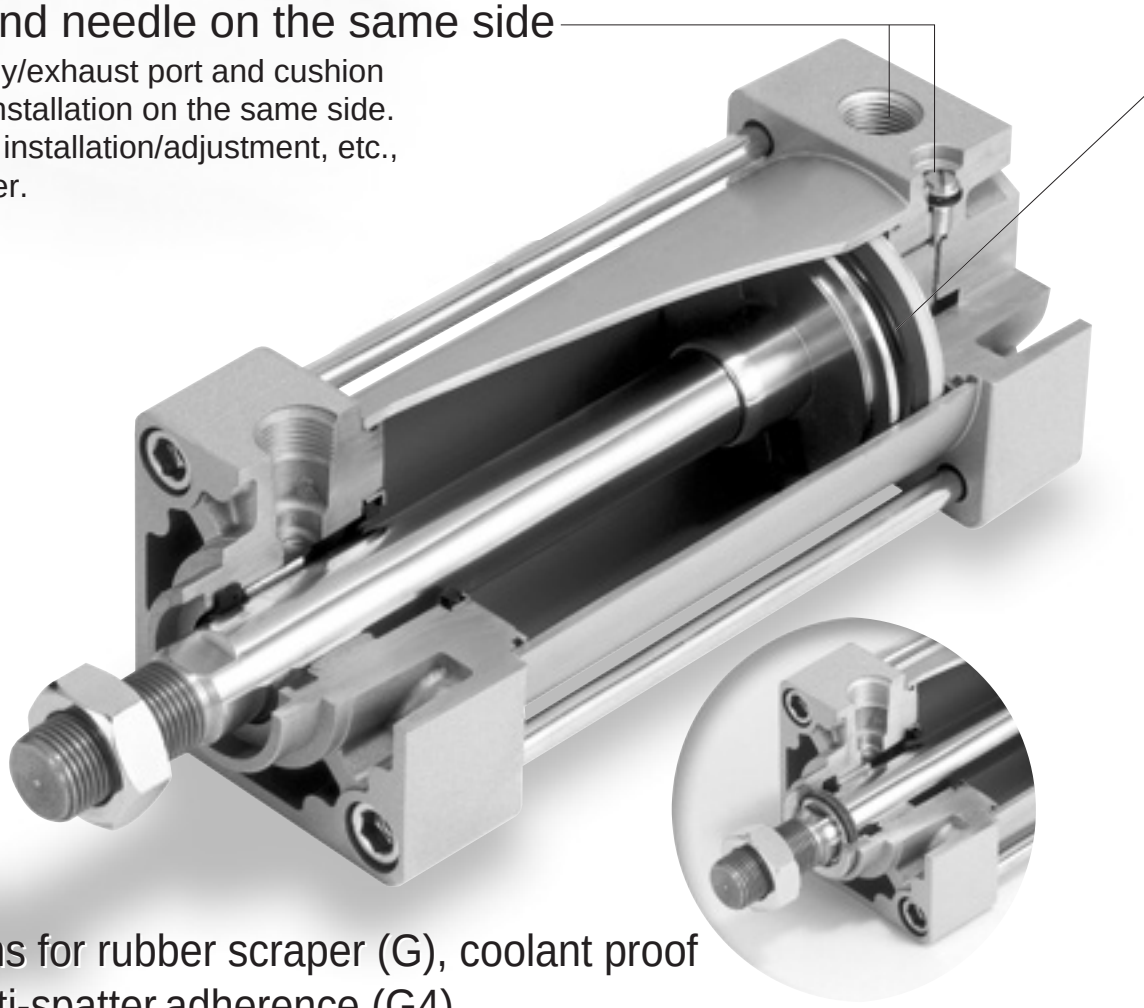

Same dimensions for rubber scraper (G), coolant proof (G2, G3) and anti-spatter adherence (G4)

The dimensions of the rubber scraper and anti-spatter adherence are the same as the standard, facilitating installation.

RoHS Directive-compatible

Tie rod Cylinder — SCG Series

guided cylinder

Compact switch

T switch is smaller than the conventional switch, eliminating switch protrusion in installation and saving space.

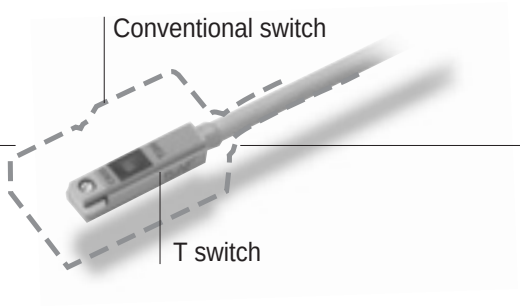

Standard magnets

Switches can be installed on all products.

Space-saving

Less installation space with cylinder up to 40 mm shorter than the conventional cylinder.

White

Products match a variety of equipment with a uniform white exterior.

■ SCG Series Products

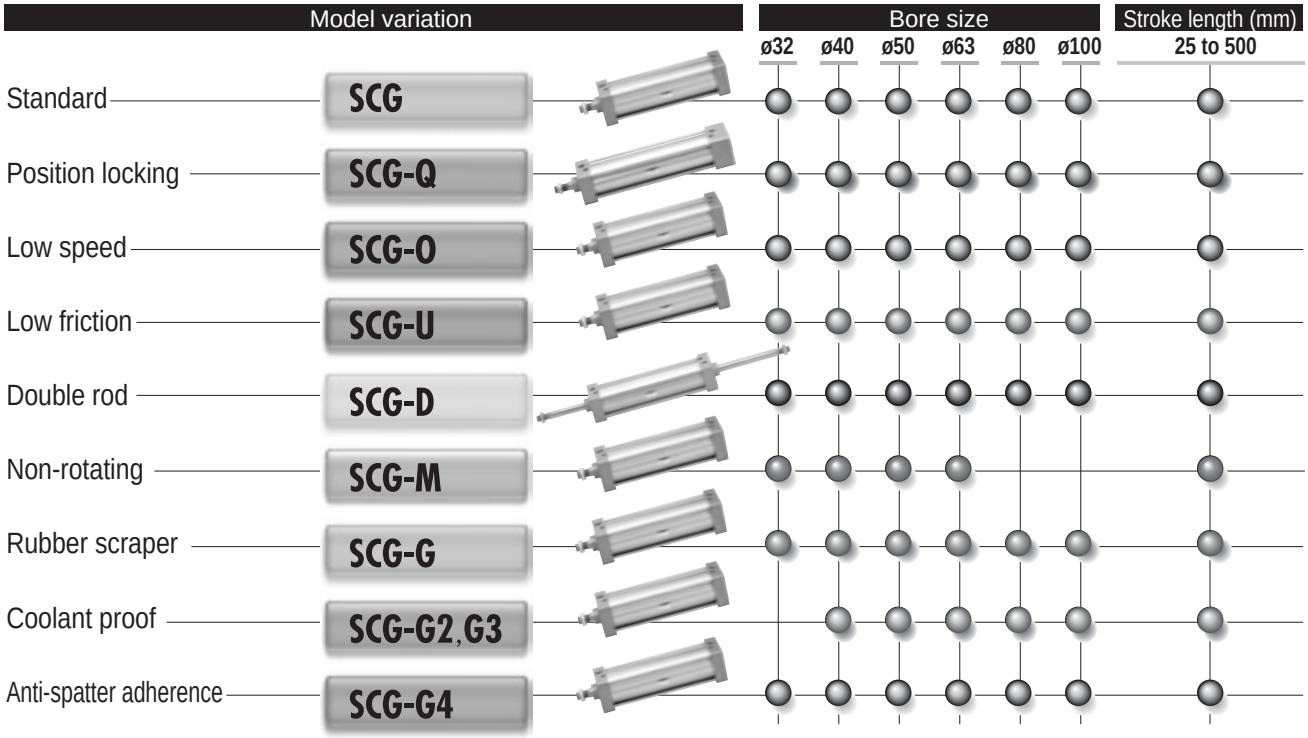

Series variation

Tie rod cylinder SCG Series

Variation	Model No. JIS symbol	Bore size (mm)	Standard stroke (mm) 25	50	75	100	150	200	250	300	350	400	450	500	Min. stroke (mm)	Max. stroke (mm)
Double acting/ single rod	SCG	ø32 ø40 ø50/ø63 ø80 ø100	●	●	●	●	●	●	●	●	●	●	●	●	1	600 700 800
Double acting/ position locking	SCG-Q 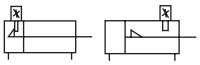	ø32 ø40 ø50/ø63 ø80 ø100	●	●	●	●	●	●	●	●	●	●	●	●	5	600 700 800
Double acting/ low speed	SCG-O	ø32 to ø63 ø80 ø100	●	●	●	●	●	●	●	●	●	●	●	●	1	600 700 800
Double acting/ low friction	SCG-U	ø32 to ø63 ø80 ø100	●	●	●	●	●	●	●	●	●	●	●	●	1	600 700 800
Double acting/ double rod	SCG-D 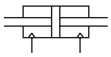	ø32 to ø63 ø80 ø100	●	●	●	●	●	●	●	●	●	●	●	●	1	600 700 800
Double acting/ rotation-stop	SCG-M	ø32 to ø63	●	●	●	●	●	●	●	●	●	●	●	●	1	600
Double acting/ rubber scraper	SCG-G	ø32 ø40 ø50/ø63 ø80 ø100	●	●	●	●	●	●	●	●	●	●	●	●	1	600 700 800
Double acting/ coolant proof	SCG-G2, G3	ø40 ø50/ø63 ø80 ø100	●	●	●	●	●	●	●	●	●	●	●	●	1	600 700 800
Double acting/ anti-spatter adherence	SCG-G4	ø32 ø40 ø50/ø63 ø80 ø100	●	●	●	●	●	●	●	●	●	●	●	●	1	600 700 800

●: Standard, ◎: Option, ○: Made to order, ▒ : Not available

Available stroke (mm)	Custom stroke (per mm)	Mounting									Cushion			Option			Accessory						Switch	Page
		Basic	Axial foot	Rod side flange	Head side flange	Eye bracket	Clevis bracket	Rod side trunnion	Head side trunnion	Intermediate trunnion	Without cushion	Two-sided air cushion	Two-sided rubber cushion	Bellows (100°C)	Piston rod material stainless steel	Copper and PTFE free	Rod eye	Rod clevis	Eye bracket	Clevis bracket	Eye bracket	Trunnion No. 2 bracket		
		00	LB	FA	FB	CA	CB	TA	TB	TC	N	B	D	J	M	P6	I	Y	B1	B2	B3	B4		
700 800 1200 1400 1500	1	●	●	●	●	●	●	●	●	●		●	◎	◎	◎	◎	◎	◎	◎	◎	◎	◎	◎	358
700 800 1200 1400 1500	1	●	●	●	●	●	●	●	●	●		●			◎	◎	◎	◎	◎	◎	◎	◎	◎	374
600 700 800	1	●	●	●	●	●	●	●	●	●	●	Contact CKD for details.			◎	◎	◎	◎	◎	◎	◎	◎	◎	396
600 700 800	1	●	●	●	●	●	●	●	●	●	●	Contact CKD for details.			◎		◎	◎	◎	◎	◎	◎	◎	402
600 700 800	1	●	●	●	●			●	●	●		●	◎	◎	◎	◎	◎	◎				◎	◎	406
600	1	●	●	●	●	●	●	●	●	●		●	◎	◎			◎	◎	◎	◎	◎	◎	◎	412
700 800 1200 1400 1500	1	●	●	●	●	●	●	●	●	●		●	◎		◎	◎	◎	◎	◎	◎	◎	◎	◎	418
800 1200 1400 1500	1	●	●	●	●	●	●	●	●	●		●	Contact CKD for details.				◎	◎	◎	◎	◎	◎	◎	424
700 800 1200 1400 1500	1	●	●	●	●	●	●	●	●	●		●	◎		◎		◎	◎	◎	◎	◎	◎	◎	430

SCP*3
CMK2
CMA2
SCM
SCG
SCA2
SCS2
CKV2
CAV2/ COVP/N2
SSD2
SSG
SSD
CAT
MDC2
MVC
SMG
MSD/ MSDG
FC*
STK
SRL3
SRG3
SRM3
SRT3
MRL2
MRG2
SM-25
ShkAbs
FJ
FK
Spd Contr
Ending

Variation and option combination selection table

● mark : Standard
◎ mark : Option
○ mark : Available (made to order product)
△ mark : Available depending on conditions (contact us)
× mark : Not available

Category		Category	Variation										Port thread			Option			
			Double acting single rod	Rotation-stop	Position locking	Low speed	Low friction	Rubber scraper	Coolant proof scraper (NBR)	Coolant proof scraper (FKM)	Anti-spatter adherence		NPT	G		With bellows (polyolefin) *3	Stainless steel PR	Copper and PTFE free	Specify piston rod end form
			None	M	Q	O	U	G	G2	G3	G4		N	G		J	M	P6	N*
Variation	Double acting single rod	Blank											○	○		◎	◎	◎	○
	Rotation-stop	M			×	×	×	×	×	×	×		○	○		◎	×	×	○
	Position locking	Q				△	×	△	△	△	△		○	○		△	◎	◎	○
	Low speed	O					×	×	×	×	×		○	○		*1	◎	×	○
	Low friction	U						×	×	×	×		○	○		×	◎	×	○
	Rubber scraper	G							×	×	×		○	○		○	○	○	○
	Coolant proof scraper (NBR)	G2								×	×		○	○		*2	●	○	○
	Coolant proof scraper (FKM)	G3									×		○	○		×	●	○	○
	Anti-spatter adherence	G4											○	○		○	○	×	○
Port thread	NPT	N												×		○	○	○	○
	G	G														○	○	○	○
Option	With bellows (polyolefin) *3	J															○	○	○
	Piston rod material stainless steel	M																	○
	Copper and PTFE free	P6																	
	Specify piston rod end form	N*																	
Accessory	Cylinder switch	Listed separately	◎	◎	◎	◎	◎	◎	◎	◎	◎		◎	◎		◎	◎	◎	◎
	Rod eye	I	◎	◎	◎	◎	◎	◎	◎	◎	◎		◎	◎		◎	◎	◎	△
	Rod clevis	Y	◎	◎	◎	◎	◎	◎	◎	◎	◎		◎	◎		◎	◎	◎	△
	Eye bracket	B1	◎	◎	◎	◎	◎	◎	◎	◎	◎		◎	◎		◎	◎	◎	◎
	Clevis bracket	B2	◎	◎	◎	◎	◎	◎	◎	◎	◎		◎	◎		◎	◎	◎	◎
	Eye bracket	B3	◎	◎	◎	◎	◎	◎	◎	◎	◎		◎	◎		◎	◎	◎	◎
	Trunnion No. 2 bracket	B4	◎	◎	◎	◎	◎	◎	◎	◎	◎		◎	◎		◎	◎	◎	◎

Caution
*1: The min. starting pressure is larger due to the resistance of expansion and contraction of the bellows.
*2: Coolant may accumulate in the bellows in some conditions.
*3: ø32 material is neoprene.

MEMO

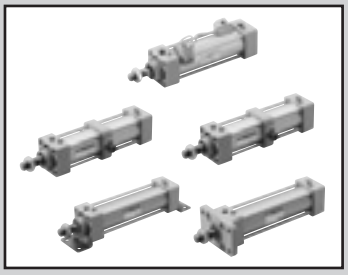

Tie rod cylinder Double acting/single rod

SCG Series

● Bore size: ø32/ø40/ø50/ø63/ø80/ø100

JIS symbol

RoHS CAD

Specifications

Item		SCG					
Bore size mm		ø32	ø40	ø50	ø63	ø80	ø100
Actuation		Double acting					
Working fluid		Compressed air					
Max. working pressure MPa		1.0 (≈150 psi, 10 bar)					
Min. working pressure MPa		0.05 (≈7.3 psi, 0.5 bar)					
Proof pressure MPa		1.6 (≈230 psi, 16 bar)					
Ambient temperature °C		-10 (14°F) to 60 (140°F) (no freezing)					
Port size		Rc1/8	Rc1/4		Rc3/8		Rc1/2
Stroke tolerance mm	With rubber cushion	$^{+1.4}_{0}$ (to 1000), $^{+1.8}_{0}$ (1001 to 1500)					
	With air cushion	$^{+1.0}_{0}$ (to 360), $^{+1.4}_{0}$ (361 to 1000), $^{+1.8}_{0}$ (1001 to 1500)					
Working piston speed mm/s		30 to 1000 (Operate within the allowable absorbed energy.)					
Cushion		Either air cushion or rubber cushion can be selected					
Effective air cushion length mm		8.6	8.6	13.4	13.4	15.4	15.4
Lubrication		Not required (use turbine oil class 1 ISO VG32 if necessary for lubrication)					
Allowable absorbed energy J	With rubber cushion	0.5	0.9	1.6	1.6	3.3	5.8
	With air cushion	2.5	3.7	8.0	14.4	25.4	45.6

Stroke

Bore size (mm)	Standard stroke (mm)	Max. stroke (mm)	Available stroke (mm)	Min. stroke (mm)
ø32	25/50/75/100 150/200/250 300/350/400 450/500	600	700	1
ø40			800	
ø50			1200	
ø63			1200	
ø80		700	1400	
ø100		800	1500	

*1: The custom stroke is available in 1 mm increments.
*2: If the max. stroke is exceeded, product specifications may not be met, depending on operating conditions. Contact CKD in this case.
*3: For the type with bellows, the available stroke is 500 mm for ø32 to ø40 bore size, 600 mm for ø50 to ø63, and 800 mm for ø80 to ø100.

Min. stroke with T0/T5 switches

Switch quantity	Different surface mounting				Same surface mounting				Center trunnion mounting				Rod side trunnion mounting No position detection at rod side stroke end.	Head side trunnion mounting No position detection at head side stroke end.
Bore size (mm)	1	2	3	4	1	2	3	4	1	2	3	4	1	1
ø32	9	17	34	51	9	48(33)	78(64)	109(94)	94(94)	94(94)	169(155)	169(155)	42	42
ø40	9	18	36	54	9	48(33)	78(64)	109(94)	81(81)	81(81)	164(142)	164(142)	38	38
ø50	9	18	36	54	9	18	36	54	112(112)	112(112)	121(121)	121(121)	51	53
ø63	10	19	38	57	10	19	38	57	85(73)	85(73)	91(91)	91(91)	41	42
ø80	10	20	39	59	10	20	39	59	96(79)	96(79)	99(99)	99(99)	41	47
ø100	10	20	40	60	10	20	40	60	101(84)	101(84)	105(105)	105(105)	47	53

*1: The values in ( ) are of T*V (L-shaped lead wire).
*2: When the stroke is 15 mm or less, the two switches could turn ON at the same time. In this case, adjust switch mounting positions to be as far apart as possible.

Min. stroke with T8 switch

Switch quantity	Different surface mounting				Same surface mounting				Center trunnion mounting				Rod side trunnion mounting No position detection at rod side stroke end.	Head side trunnion mounting No position detection at head side stroke end.
Bore size (mm)	1	2	3	4	1	2	3	4	1	2	3	4	1	1
ø32	9	17	34	51	9	54(31)	84(62)	115(92)	100(100)	100(100)	191(161)	191(161)	45	45
ø40	9	18	36	54	9	54(31)	84(62)	115(92)	87(87)	87(87)	178(148)	178(148)	41	41
ø50	9	18	36	54	9	18	36	54	116(116)	116(116)	121(121)	121(121)	54	55
ø63	10	19	38	57	10	19	38	57	89(77)	89(77)	99(99)	99(99)	44	44
ø80	10	20	39	59	10	20	39	59	100(75)	100(75)	111(111)	111(111)	43	49
ø100	10	20	40	60	10	20	40	60	105(80)	105(80)	117(117)	117(117)	49	55

*1: The values in ( ) are of T*V (L-shaped lead wire).
*2: When the stroke is 15 mm or less, the two switches could turn ON at the same time. In this case, adjust switch mounting positions to be as far apart as possible.

Min. stroke with T2/T3 switches

Switch quantity	Different surface mounting				Same surface mounting				Center trunnion mounting				Rod side trunnion mounting No position detection at rod side stroke end.	Head side trunnion mounting No position detection at head side stroke end.
Bore size (mm)	1	2	3	4	1	2	3	4	1	2	3	4	1	1
ø32	5	10	20	30	5	40(33)	70(64)	101(94)	64(55)	64(55)	131(116)	131(116)	27	27
ø40	5	10	20	30	5	40(33)	70(64)	101(94)	69(60)	69(60)	152(121)	152(121)	32	32
ø50	5	10	20	30	5	10	20	30	71(62)	71(62)	71(61)	71(61)	31	32
ø63	6	11	21	32	6	11	21	32	77(68)	77(68)	77(68)	77(68)	37	38
ø80	6	11	22	33	6	11	22	33	88(79)	88(79)	88(80)	88(80)	37	43
ø100	6	11	22	33	6	11	22	33	93(84)	93(84)	93(85)	93(85)	43	49

*1: The values in ( ) are of T*V (L-shaped lead wire).
*2: When the stroke is 15 mm or less, the two switches could turn ON at the same time. In this case, adjust switch mounting positions to be as far apart as possible.

Min. stroke with T1/T2Y/T3Y/T2YD/T2W/T3W switches

Switch quantity	Different surface mounting				Same surface mounting				Center trunnion mounting				Rod side trunnion mounting No position detection at rod side stroke end.	Head side trunnion mounting No position detection at head side stroke end.
Bore size (mm)	1	2	3	4	1	2	3	4	1	2	3	4	1	1
ø32	6	11	22	33	6	62(49)	92(80)	123(110)	86(61)	86(61)	177(122)	177(122)	38	38
ø40	6	11	22	33	6	62(49)	92(80)	123(110)	91(66)	91(66)	182(127)	182(127)	43	43
ø50	6	12	24	36	6	12	24	36	93(68)	93(68)	93(68)	93(68)	42	43
ø63	6	12	24	36	6	12	24	36	99(74)	99(74)	99(74)	99(74)	48	49
ø80	7	13	25	38	7	13	25	38	110(85)	110(85)	110(86)	110(86)	48	54
ø100	7	13	26	39	7	13	26	39	115(90)	115(90)	115(92)	115(92)	54	60

*1: The values in ( ) are of T*V (L-shaped lead wire). T2YD does not have an L-shaped lead wire (V).
*2: When the stroke is 15 mm or less, the two switches could turn ON at the same time. In this case, adjust switch mounting positions to be as far apart as possible.

Switch specifications

● 1-color/2-color LED/for AC magnetic field proof

Item	2-wire proximity	2-wire proximity			3-wire proximity				2-wire reed							2-wire proximity
	T1H/ T1V	T2H/T2V/ T2JH/T2JV	T2YH/ T2YV	T2WH/ T2WV	T3H/ T3V	T3PH/ T3PV	T3YH/ T3YV	T3WH/ T3WV	T0H/T0V		T5H/T5V		T8H/T8V			T2YD (*4) T2YDT
Applications	Programming controller relay, compact solenoid valve	Dedicated for programmable controller			For programmable controller, relay				For programmable controller, relay		For programmable controller, relay (no lamp), serial		For programmable controller, relay			Dedicated for programmable controller
Output method	-				NPN output	PNP output	NPN output	NPN output	-							
Pwr. supp. V.	-				10 to 28 VDC				-							
Load voltage	85 to 265 VAC	10 to 30 VDC		24 VDC ±10%	30 VDC or less				12/24 VDC	110 VAC	5/12/24 VDC	110 VAC	12/24 VDC	110 VAC	220 VAC	24 VDC ±10%
Load current	5 to 100 mA	5 to 20 mA (*3)			100 mA or less		50 mA or less		5 to 50 mA	7 to 20 mA	50 mA or less	20 mA or less	5 to 50 mA	7 to 20 mA	7 to 10 mA	5 to 20 mA
Indicator	LED (Lit when ON)	LED (Lit when ON)	Red/green LED (Lit when ON)	Red/green LED (Lit when ON)	LED (Lit when ON)	Yellow LED (Lit when ON)	Red/green LED (Lit when ON)	Red/green LED (Lit when ON)	LED (Lit when ON)		No indicator lamp		LED (Lit when ON)			Red/green LED (Lit when ON)
Leakage current	≤ 1 mA at 100 VAC, ≤ 2 mA at 200 VAC	1 mA or less			10 μA or less				0 mA							1 mA or less
Weight g	1 m:33 3 m:87 5 m:142	1 m:18 3 m:49 5 m:80	1 m:33 3 m:87 5 m:142	1 m:18 3 m:49 5 m:80	1 m:18 3 m:49 5 m:80		1 m:33 3 m:87 5 m:142	1 m:18 3 m:49 5 m:80	1 m:18 3 m:49 5 m:80				1 m:33 3 m:87 5 m:142			1 m:61 3 m:166 5 m:272

*1: Refer to Ending Page 1 for detailed switch specifications and dimensions.
*2: Switches other than the above models, such as switches with connectors, are also available. Refer to Ending Page 1.
*3: Max. load current: 20 mA at 25°C. The current is lower than 20 mA if the operating ambient temperature around the switch is higher than 25°C. (5 to 10 mA at 60°C)
*4: Switch for AC magnetic field (T2YD/T2YDT) cannot be used in DC magnetic field.

Weight table

(Unit: kg)

Bore size (mm)	Product weight for 0 mm stroke						Added weight /50 mm stroke	Switch weight (per 1 pc)	Switch mounting bracket	Accessory weight	
	Basic (00)	Foot (LB)	Flange (FA, FB)	Eye bracket (CA)	Clevis bracket (CB)	Trunnion (TA, TB, TC)				I	Y
ø32	0.50	0.61	0.72	0.65	0.68	0.67	0.12	Refer to the weight in the switch specifications.	0.024	0.07	0.10
ø40	0.66	0.80	0.94	0.85	0.85	1.00	0.17		0.024	0.07	0.13
ø50	1.13	1.29	1.61	1.54	1.54	1.61	0.23		0.022	0.20	0.30
ø63	1.39	1.73	2.15	1.95	1.96	2.27	0.25		0.022	0.20	0.30
ø80	2.66	3.09	4.23	3.93	3.94	4.15	0.40		0.026	0.52	0.94
ø100	3.77	4.63	6.09	5.49	5.52	6.34	0.51		0.024	0.48	0.92

SCP*3
CMK2
CMA2
SCM
SCG
SCA2
SCS2
CKV2
CAV2/COVP/N2
SSD2
SSG
SSD
CAT
MDC2
MVC
SMG
MSD/MSDG
FC*
STK
SRL3
SRG3
SRM3
SRT3
MRL2
MRG2
SM-25
ShkAbs
FJ
FK
Spd Contr
Ending

How to order

No switch (built-in magnet for switch)

SCG - LB - 40 ( ) B - 100 ———— J I

With switch (built-in magnet for switch)

SCG - LB - 40 ( ) B - 100 - T2H - R - J I

Model No.

Ⓐ Mounting *1

Ⓑ Bore size

Ⓒ Port thread

Ⓓ Cushion

Ⓔ Stroke

Ⓕ Switch model No.

Ⓖ Switch quantity *3

Ⓗ Option *4

Ⓘ Accessory *5

Code	Description
Ⓐ Mounting	
00	Basic
LB	Axial foot
FA	Rod side flange
FB	Head side flange
CA	Eye bracket
CB	Clevis bracket (pin and split pin included)
TA	Rod side trunnion
TB	Head side trunnion
TC	Intermediate trunnion
Ⓑ Bore size (mm)	
32	ø32
40	ø40
50	ø50
63	ø63
80	ø80
100	ø100
Ⓒ Port thread	
Blank	Rc thread
N	NPT thread (made-to-order product)
G	G thread (made-to-order product)
Ⓓ Cushion	
B	Two-sided air cushion (basic)
D	Two-sided rubber cushion
Note: The rubber cushion has a longer total length than the air cushion.	

Ⓔ Stroke (mm)

Bore size	Stroke *2	Available stroke	Custom stroke
ø32	1 to 600	700	In 1 mm increments
ø40		800	
ø50		1200	
ø63			
ø80	1 to 700	1400	
ø100	1 to 800	1500	

Ⓕ Switch model No.

Axial lead wire	Radial lead wire	Contact	Voltage AC	Voltage DC	Indicator	Lead wire
TOH*	T0V*	Reed	●	●	1-color LED	2-wire
T5H*	T5V*		●	●	No indicator lamp	
T8H*	T8V*		●	●	1-color LED	
T1H*	T1V*	Proximity	●		1-color LED	2-wire
T2H*	T2V*			●		
T3H*	T3V*			●		3-wire
T3PH*	T3PV*			●	1-color LED	
T2WH*	T2WV*			●	2-color LED	2-wire
T2YH*	T2YV*			●		
T3WH*	T3WV*			●		3-wire
T3YH*	T3YV*			●		
T2YD*	-			●	2-color LED for AC magnetic field	2-wire
T2YDT*	-			●		
T2JH*	T2JV*			●	1-color LED off-delay	2-wire

* Lead wire length	
Blank	1 m (standard)
3	3 m (option)
5	5 m (option)

Ⓖ Switch quantity	
R	1 on rod side
H	1 on head side
D	2
T	3

Ⓗ Option

		Max. ambient temp.	Instantaneous ambient temp
J	Bellows	100°C	200°C
M	Piston rod material (stainless steel)		
P6	Copper and PTFE free		

Ⓘ Accessory	
I	Rod eye
Y	Rod clevis (pin and split pin included)
B1	Eye bracket
B2	Clevis bracket (pin and split pin included)
B3	Eye bracket
B4	Trunnion No. 2 bracket (2 pcs./set)

⚠ Precautions for model No. selection

*1 : Mounting bracket will be shipped with the product. (If the product is the trunnion (TA, TB or TC) with bellows and the mounting bracket is LB or FA, it will be attached with the product.)

*2 : Refer to pages 358 and 359 for the min. stroke with switch.

*3 : When selecting TA or TB as mounting, the number of switches is limited to "H" (1 on head side) for TA, and "R" (1 on rod side) for TB.

*4 : The instantaneous max. temperature is the temperature when sparks and cutting chips, etc., instantaneously contact the bellows.

*5 : "I" and "Y" cannot be selected together.

[Example of model No.]

SCG-LB-40B-100-T2H-D-JI

Model: Tie rod cylinder, double acting/single rod

- Ⓐ Mounting : Axial foot
- Ⓑ Bore size : ø40 mm
- Ⓒ Port thread : Rc thread
- Ⓓ Cushion : With two-sided air cushion
- Ⓔ Stroke : 100 mm
- Ⓕ Switch model No. : Proximity T2H switch, lead wire 1 m
- Ⓖ Switch quantity : 2
- Ⓗ Option : With bellows
- Ⓘ Accessory : Rod eye (included product)

How to order switch

● Switch body + mounting bracket set

SCG - T0H - 40

Switch model No. (Item Ⓕ on page 360)
Bore size (Item Ⓑ on page 360)

● Switch body only

SW - T0H

Switch model No. (Item Ⓕ on page 360)

Note: Contact CKD when using an environment-friendly T-switch.

● Switch mounting bracket set

SCG - T - 40

Mounting bracket
Bore size (Item Ⓑ on page 360)

How to order mounting bracket

Bore size (mm) / Mounting bracket	ø32	ø40	ø50	ø63	ø80	ø100
Foot (LB)	SCG-LB-32	SCG-LB-40	SCG-LB-50	SCG-LB-63	SCG-LB-80	SCG-LB-100
Flange (FA) (FB) *1	SCG-FA-32	SCG-FA-40	SCG-FA-50	SCG-FA-63	SCG-FA-80	SCG-FA-100
Eye bracket (CA)	SCG-CA-32	SCG-CA-40	SCG-CA-50	SCG-CA-63	SCG-CA-80	SCG-CA-100
Clevis bracket (CB)	SCG-CB-32	SCG-CB-40	SCG-CB-50	SCG-CB-63	SCG-CB-80	SCG-CB-100

*1: Specify the flange (FA) with bellows as “SCG-FA-(bore size)-J”.
*2: The foot mounting bracket (LB) is provided as 2 pcs./set.
*3: All mounting brackets are supplied with mounting bolts.

Specifications for rechargeable battery

(Catalog No. CC-1226A)

● Design is compatible with rechargeable battery manufacturing process.

SCG -…- P4*

* Contact CKD for details.

Theoretical thrust table

(Unit: N)

Bore size (mm)	Operating direction	Working pressure MPa 0.05	0.1	0.15	0.2	0.3	0.4	0.5	0.6	0.7	0.8	0.9	1.0
ø32	Push	40.2	80.4	$1.21x10^2$	$1.61x10^2$	$2.41x10^2$	$3.22x10^2$	$4.02x10^2$	$4.83x10^2$	$5.63x10^2$	$6.43x10^2$	$7.24x10^2$	$8.04x10^2$
	Pull	34.6	69.1	$1.04x10^2$	$1.38x10^2$	$2.07x10^2$	$2.76x10^2$	$3.46x10^2$	$4.15x10^2$	$4.84x10^2$	$5.53x10^2$	$6.22x10^2$	$6.91x10^2$
ø40	Push	62.8	$1.26x10^2$	$1.88x10^2$	$2.51x10^2$	$3.77x10^2$	$5.03x10^2$	$6.28x10^2$	$7.54x10^2$	$8.80x10^2$	$1.01x10^3$	$1.13x10^3$	$1.26x10^3$
	Pull	52.8	$1.06x10^2$	$1.58x10^2$	$2.11x10^2$	$3.17x10^2$	$4.22x10^2$	$5.28x10^2$	$6.33x10^2$	$7.39x10^2$	$8.44x10^2$	$9.50x10^2$	$1.06x10^3$
ø50	Push	98.2	$1.96x10^2$	$2.95x10^2$	$3.93x10^2$	$5.89x10^2$	$7.85x10^2$	$9.82x10^2$	$1.18x10^3$	$1.37x10^3$	$1.57x10^3$	$1.77x10^3$	$1.96x10^3$
	Pull	82.5	$1.65x10^2$	$2.47x10^2$	$3.30x10^2$	$4.95x10^2$	$6.60x10^2$	$8.25x10^2$	$9.90x10^2$	$1.15x10^3$	$1.32x10^3$	$1.48x10^3$	$1.65x10^3$
ø63	Push	$1.56x10^2$	$3.12x10^2$	$4.68x10^2$	$6.23x10^2$	$9.35x10^2$	$1.25x10^3$	$1.56x10^3$	$1.87x10^3$	$2.18x10^3$	$2.49x10^3$	$2.81x10^3$	$3.12x10^3$
	Pull	$1.40x10^2$	$2.80x10^2$	$4.20x10^2$	$5.61x10^2$	$8.41x10^2$	$1.12x10^3$	$1.40x10^3$	$1.68x10^3$	$1.96x10^3$	$2.24x10^3$	$2.52x10^3$	$2.80x10^3$
ø80	Push	$2.51x10^2$	$5.03x10^2$	$7.54x10^2$	$1.01x10^3$	$1.51x10^3$	$2.01x10^3$	$2.51x10^3$	$3.02x10^3$	$3.52x10^3$	$4.02x10^3$	$4.52x10^3$	$5.03x10^3$
	Pull	$2.27x10^2$	$4.54x10^2$	$6.80x10^2$	$9.07x10^2$	$1.36x10^3$	$1.81x10^3$	$2.27x10^3$	$2.72x10^3$	$3.17x10^3$	$3.63x10^3$	$4.08x10^3$	$4.54x10^3$
ø100	Push	$3.93x10^2$	$7.85x10^2$	$1.18x10^3$	$1.57x10^3$	$2.36x10^3$	$3.14x10^3$	$3.93x10^3$	$4.71x10^3$	$5.50x10^3$	$6.28x10^3$	$7.07x10^3$	$7.85x10^3$
	Pull	$3.57x10^2$	$7.15x10^2$	$1.07x10^3$	$1.43x10^3$	$2.14x10^3$	$2.86x10^3$	$3.57x10^3$	$4.29x10^3$	$5.00x10^3$	$5.72x10^3$	$6.43x10^3$	$7.15x10^3$

Internal structure and parts list

With air cushion

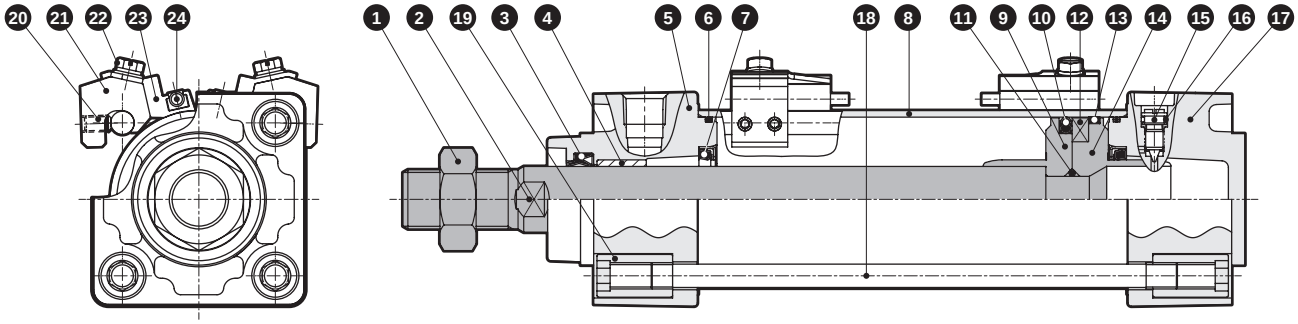

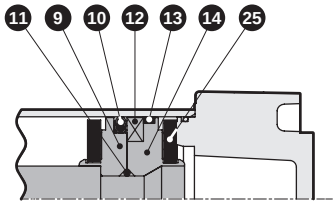

With rubber cushion

No.	Part name	Material	Remarks	No.	Part name	Material	Remarks
1	Rod nut	Steel	Nickel plating	14	Piston H	ø32, ø40: Aluminum alloy ø50 to ø100: Aluminum alloy die-casting	
2	Piston rod	Steel	Industrial chrome plating				
3	Rod packing	Nitrile rubber		15	Cushion needle	Copper alloy	Nickel plating
4	Bush	Oil-impregnated bearing alloy		16	Needle gasket	Nitrile rubber	
5	Rod cover	Aluminum alloy die-casting	Paint	17	Head cover	Aluminum alloy die-casting	Paint
6	Cylinder gasket	Nitrile rubber		18	Tie rod	Steel	Zinc chromate treatment
7	Cushion packing	Nitrile rubber, steel	With air cushion only	19	Round nut	Steel	Zinc chromate treatment
8	Cylinder tube	Aluminum alloy	Hard alumite treatment	20	Hexagon socket set screw	Steel	Black finish
9	Piston R	ø32, ø40: Aluminum alloy ø50 to ø100: Aluminum alloy die-casting		21	Switch mounting base	Aluminum alloy	
				22	Slotted head hexagon head bolt with captive washer	Stainless steel	
10	Piston packing	Nitrile rubber		23	Switch holder	Aluminum alloy	
11	Piston gasket	Nitrile rubber		24	Cylinder switch		
12	Magnet	Plastic		25	Cushion rubber	Urethane rubber	With rubber cushion only
13	Wear ring	Polyacetal resin					

Repair parts list

● With air cushion

Bore size (mm)	Kit No.	Repair parts No.
ø32	SCG-32BK	❸ ❻ ❼ ❿ ⓭ ⓰
ø40	SCG-40BK	
ø50	SCG-50BK	
ø63	SCG-63BK	
ø80	SCG-80BK	
ø100	SCG-100BK	

Note: Specify the kit No. when placing an order.

● With rubber cushion

Bore size (mm)	Kit No.	Repair parts No.
ø32	SCG-32DK	❸ ❻ ❿ ⓭ ⓰ ㉕
ø40	SCG-40DK	
ø50	SCG-50DK	
ø63	SCG-63DK	
ø80	SCG-80DK	
ø100	SCG-100DK	

Note: Specify the kit No. when placing an order.

Material of mounting bracket

Mounting	Material	Remarks
LB	Steel	Nickel plating
FA/FB	Steel	Paint
CA/CB	Cast iron	Paint
TA/TB/TC	Cast iron	Paint

Note: Mounting bracket will be shipped with the product.
If the product is the trunnion (TA, TB or TC) with bellows and the mounting is LB or FA, it will be attached with the product.

Dimensions

● Basic (00)

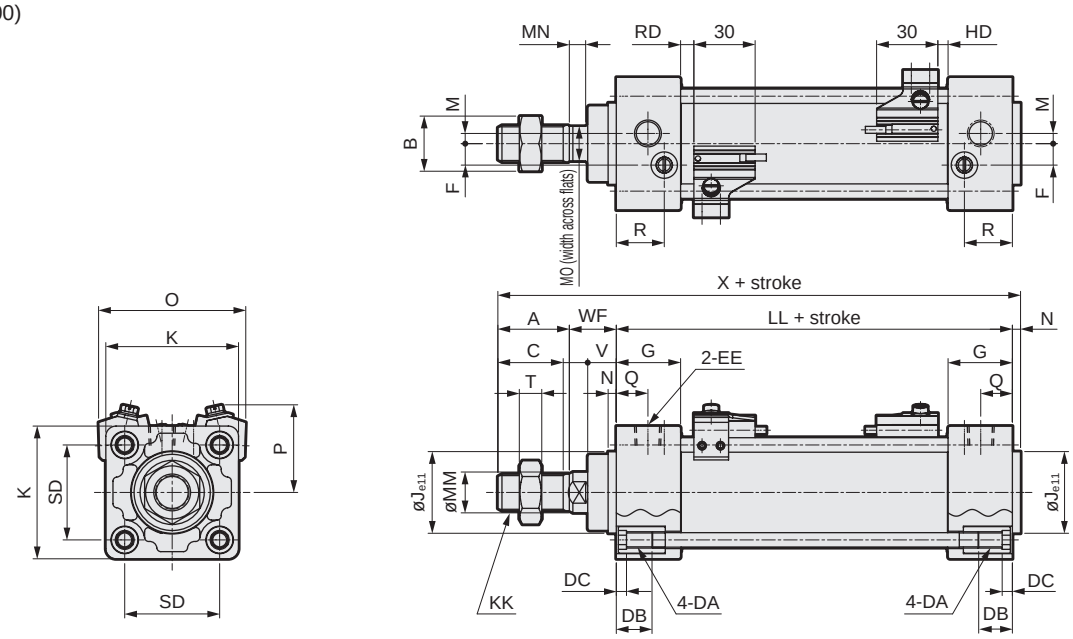

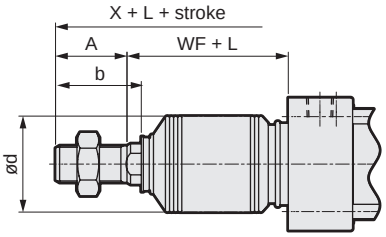

[With bellows]

*1: Dimensions in ( ) are for the rubber cushion.
*2: Refer to page 436 for HD, RD and protruding dimensions of other switches.
*3: For the dimensions of the accessories, refer to pages 372 and 373.

Code / Bore size (mm)	Basic (00) Basic dimensions																
	A	B	C	DA	DB	DC	EE	F	G	J	K	KK	*1 LL	M	MM	MN	MO
ø32	22	17	19.5	M6	16	5	Rc1/8	6.5	27	30	46	M10X1.25	84 (90)	4	12	5.5	10
ø40	30	22	27	M6	16	5	Rc1/4	9	27	35	52	M14X1.5	84 (90)	4	16	6	14
ø50	35	27	32	M8	16	5	Rc1/4	10.5	31.5	40	65	M18X1.5	94 (102)	5	20	8	17
ø63	35	27	32	M8	16	5	Rc3/8	12	31.5	45	75	M18X1.5	94 (102)	9	20	8	17
ø80	40	32	37	M10	16	5	Rc3/8	14	38	45	95	M22X1.5	114 (124)	11.5	25	11	22
ø100	40	41	37	M10	16	5	Rc1/2	15	38	55	114	M26X1.5	114 (124)	17	30	13	27

Code / Bore size (mm)	Mounting method								With switch					
	N	Q	R	SD	T	V	WF	*1 X	O	P	T0, T5 ,T2, T3		T2W, T3W	
											RD	HD	RD	HD
ø32	4	13	19	32.5	6	13	25	135 (141)	59	38	5 (8)	5 (8)	7.5 (10.5)	7.5 (10.5)
ø40	4	14	19	38	8	13	21	139 (145)	66	41	5 (8)	5 (8)	7.5 (10.5)	7.5 (10.5)
ø50	4	15.5	23.5	46.5	11	14	23	156 (164)	72	43	6.5 (10.5)	5 (9)	9 (13)	7 (11)
ø63	4	16.5	21.5	56.5	11	14	23	156 (164)	83	48	6.5 (10.5)	5 (9)	9 (13)	7 (11)
ø80	4	19	28	72	13	20	32	190 (200)	104	57	12.5 (17.5)	6 (11)	15 (20)	8 (13)
ø100	4	19	28	89	16	20	32	190 (200)	121	63	12 (17)	6.5 (11.5)	14.5 (19.5)	8.5 (13.5)

Code / Bore size (mm)	With bellows														
	A	b	d	WF	L										
					50 or less	Over 50 to 100	Over 100 to 150	Over 150 to 200	Over 200 to 300	Over 300 to 400	Over 400 to 500	Over 500 to 600	Over 600 to 700	Over 700 to 800	Over 800
ø32	22	31.5	38	25	26	39	51	64	89	114	139	0.35 X stroke-37			
ø40	30	35	40	21	30	43	55	68	93	118	143	0.35 X stroke-32			
ø50	35	42	47	23	31	44	56	69	94	119	144	169	0.35 X stroke-41		
ø63	35	42	47	23	31	44	56	69	94	119	144	169	0.35 X stroke-41		
ø80	40	50	53	32	29	42	54	67	92	117	142	167	192	217	0.35 X stroke-63
ø100	40	52.5	61	32	29	42	54	67	92	117	142	167	192	217	0.35 X stroke-63

SCP*3
CMK2
CMA2
SCM
SCG
SCA2
SCS2
CKV2
CAV2/ COVP/N2
SSD2
SSG
SSD
CAT
MDC2
MVC
SMG
MSD/ MSDG
FC*
STK
SRL3
SRG3
SRM3
SRT3
MRL2
MRG2
SM-25
ShkAbs
FJ
FK
Spd Contr
Ending

Dimensions

● Axial foot (LB)

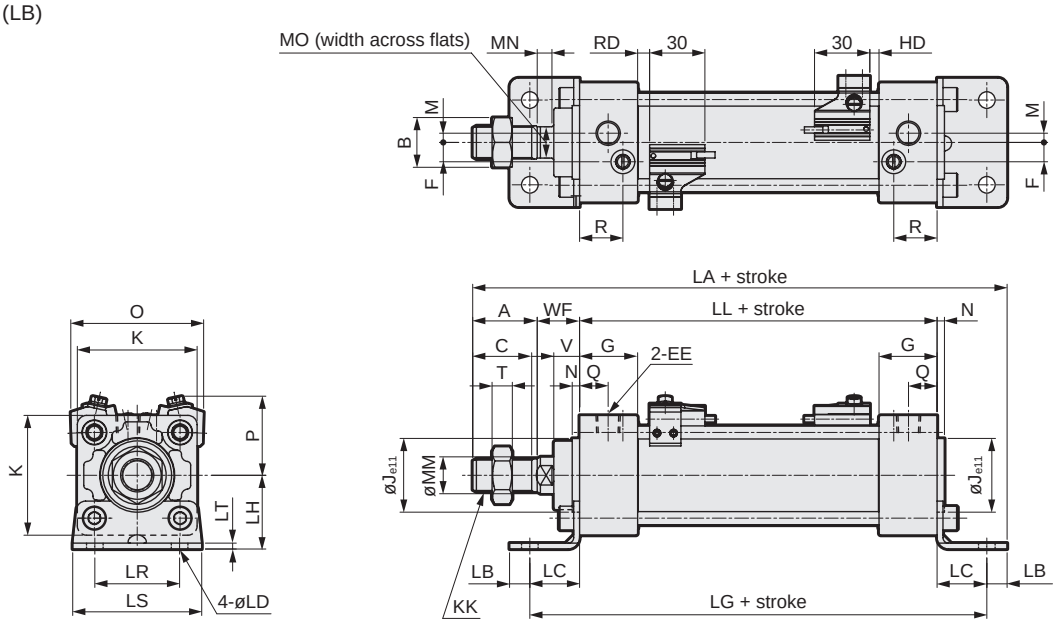

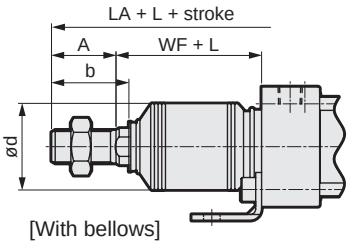

[With bellows]

*1: Dimensions in ( ) are for the rubber cushion.
*2: Refer to page 436 for HD, RD and protruding dimensions of other switches.
*3: For the dimensions of the accessories, refer to pages 372 and 373.

Code / Bore size (mm)	Axial foot (LB) Basic dimensions																			
	A	B	C	EE	F	G	J	K	KK	*1 LL	M	MM	MN	MO	N	Q	R	T	V	WF
ø32	22	17	19.5	Rc1/8	6.5	27	30	46	M10X1.25	84 (90)	4	12	5.5	10	4	13	19	6	13	25
ø40	30	22	27	Rc1/4	9	27	35	52	M14X1.5	84 (90)	4	16	6	14	4	14	19	8	13	21
ø50	35	27	32	Rc1/4	10.5	31.5	40	65	M18X1.5	94 (102)	5	20	8	17	4	15.5	23.5	11	14	23
ø63	35	27	32	Rc3/8	12	31.5	45	75	M18X1.5	94 (102)	9	20	8	17	4	16.5	21.5	11	14	23
ø80	40	32	37	Rc3/8	14	38	45	95	M22X1.5	114 (124)	11.5	25	11	22	4	19	28	13	20	32
ø100	40	41	37	Rc1/2	15	38	55	114	M26X1.5	114 (124)	17	30	13	27	4	19	28	16	20	32

Code / Bore size (mm)	Mounting method									With switch					
	*1 LA	LB	LC	LD	*1 LG	LH	LR	LS	LT	O	P	T0, T5 ,T2, T3		T2W, T3W	
												RD	HD	RD	HD
ø32	162 (168)	9	22	7	128 (134)	30	32	50	3.2	59	38	5 (8)	5 (8)	7.5 (10.5)	7.5 (10.5)
ø40	170 (176)	11	24	9	132 (138)	33	38	55	3.2	66	41	5 (8)	5 (8)	7.5 (10.5)	7.5 (10.5)
ø50	190 (198)	11	27	9	148 (156)	40	46	70	3.2	72	43	6.5 (10.5)	5 (9)	9 (13)	7 (11)
ø63	193 (201)	14	27	12	148 (156)	45	56	80	4.5	83	48	6.5 (10.5)	5 (9)	9 (13)	7 (11)
ø80	230 (240)	14	30	12	174 (184)	55	72	95	4.5	104	57	12.5 (17.5)	6 (11)	15 (20)	8 (13)
ø100	234 (244)	16	32	14	178 (188)	65	89	114	6	121	63	12 (17)	6.5 (11.5)	14.5 (19.5)	8.5 (13.5)

Code / Bore size (mm)	With bellows														
	A	b	d	WF	L										
					50 or less	Over 50 to 100	Over 100 to 150	Over 150 to 200	Over 200 to 300	Over 300 to 400	Over 400 to 500	Over 500 to 600	Over 600 to 700	Over 700 to 800	Over 800
ø32	22	31.5	38	25	26	39	51	64	89	114	139	0.35 X stroke-37			
ø40	30	35	40	21	30	43	55	68	93	118	143	0.35 X stroke-32			
ø50	35	42	47	23	31	44	56	69	94	119	144	169	0.35 X stroke-41		
ø63	35	42	47	23	31	44	56	69	94	119	144	169	0.35 X stroke-41		
ø80	40	50	53	32	29	42	54	67	92	117	142	167	192	217	0.35 X stroke-63
ø100	40	52.5	61	32	29	42	54	67	92	117	142	167	192	217	0.35 X stroke-63

Dimensions

● Rod side flange(FA)

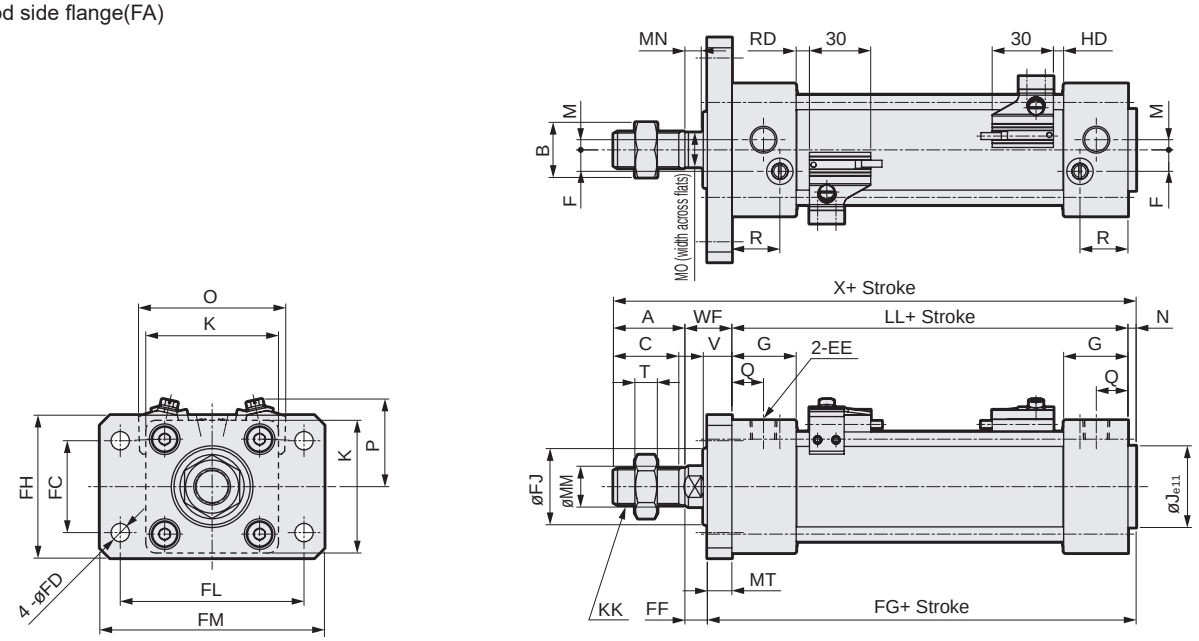

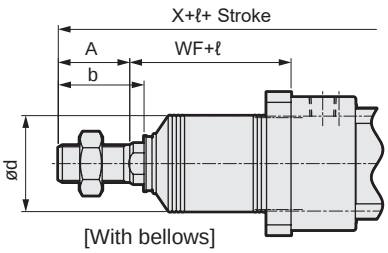

[With bellows]

*1: Dimensions in ( ) are for the rubber cushion.
*2: Refer to page 436 for HD, RD and protruding dimensions of other switches.
*3: For the dimensions of the accessories, refer to pages 372 and 373.

Code / Bore size (mm)	Rod side flange (FA) Basic dimensions																				
	A	B	C	EE	F	G	J	K	KK	*1 LL	M	MM	MN	MO	N	Q	R	T	V	WF	*1 X
ø32	22	17	19.5	Rc1/8	6.5	27	30	46	M10X1.25	84(90)	4	12	5.5	10	4	13	19	6	13	25	135(141)
ø40	30	22	27	Rc1/4	9	27	35	52	M14X1.5	84(90)	4	16	6	14	4	14	19	8	13	21	139(145)
ø50	35	27	32	Rc1/4	10.5	31.5	40	65	M18X1.5	94(102)	5	20	8	17	4	15.5	23.5	11	14	23	156(164)
ø63	35	27	32	Rc3/8	12	31.5	45	75	M18X1.5	94(102)	9	20	8	17	4	16.5	21.5	11	14	23	156(164)
ø80	40	32	37	Rc3/8	14	38	45	95	M22X1.5	114(124)	11.5	25	11	22	4	19	28	13	20	32	190(200)
ø100	40	41	37	Rc1/2	15	38	55	114	M26X1.5	114(124)	17	30	13	27	4	19	28	16	20	32	190(200)

Code / Bore size (mm)	Mounting dimensions									With switch					
												T0,T5,T2,T3		T2W,T3W	
	FC	FD	FF	*1 FG	FJ	MT	FH	FL	FM	O	P	RD	HD	RD	HD
ø32	32	7	15	98	29	10	50	64	79	59	38	5(8)	5(8)	7.5 (10.5)	7.5 (10.5)
ø40	36	9	11	98	30	10	55	72	90	66	41	5(8)	5(8)	7.5 (10.5)	7.5 (10.5)
ø50	45	9	11	110	38	12	70	90	110	72	43	6.5 (10.5)	5(9)	9(13)	7(11)
ø63	50	9	11	110	38	12	80	100	120	83	48	6.5 (10.5)	5(9)	9(13)	7(11)
ø80	63	12	16	134(144)	43	16	100	126	153	104	57	12.5 (17.5)	6(11)	15(20)	8(13)
ø100	75	14	16	134(144)	51	16	120	150	178	121	63	12(17)	6.5 (11.5)	14.5 (19.5)	8.5 (13.5)

Code / Bore size (mm)	With bellows														
					ℓ										
	A	b	d	WF	50 or less	Over 50 to 100	Over 100 to 150	Over 150 to 200	Over 200 to 300	Over 300 to 400	Over 400 to 500	Over 500 to 600	Over 600 to 700	Over 700 to 800	Over 800
ø32	22	31.5	38	25	26	39	51	64	89	114	139	0.35 x stroke-37			
ø40	30	35	40	21	30	43	55	68	93	118	143	0.35 x stroke-32			
ø50	35	42	47	23	31	44	56	69	94	119	144	169	0.35 x stroke-41		
ø63	35	42	47	23	31	44	56	69	94	119	144	169	0.35 x stroke-41		
ø80	40	50	53	32	29	42	54	67	92	117	142	167	192	217	0.35 x stroke-63
ø100	40	52.5	61	32	29	42	54	67	92	117	142	167	192	217	0.35 x stroke-63

SCP*3
CMK2
CMA2
SCM
SCG
SCA2
SCS2
CKV2
CAV2/ COVP/N2
SSD2
SSG
SSD
CAT
MDC2
MVC
SMG
MSD/ MSDG
FC*
STK
SRL3
SRG3
SRM3
SRT3
MRL2
MRG2
SM-25
ShkAbs
FJ
FK
Spd Contr
Ending

dimensions

● Head side flange(FB)

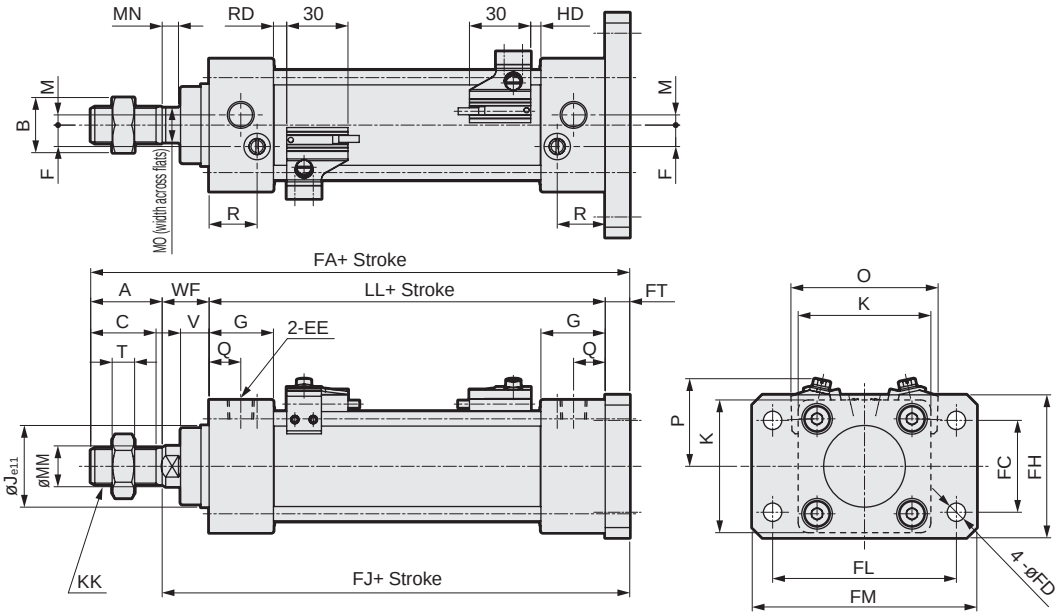

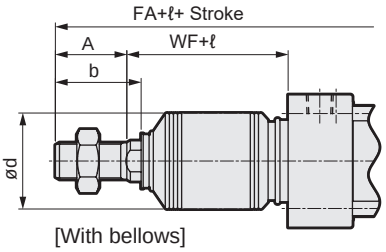

[With bellows]

*1: Dimensions in ( ) are for the rubber cushion.
*2: Refer to page 436 for HD, RD and protruding dimensions of other switches.
*3: For the dimensions of the accessories, refer to pages 372 and 373.

Code / Bore size (mm)	Head side flange (FB) Basic dimensions																			
	A	B	C	EE	F	G	J	K	KK	*1 LL	M	MM	MN	MO	N	Q	R	T	V	WF
ø32	22	17	19.5	Rc1/8	6.5	27	30	46	M10X1.25	84(90)	4	12	5.5	10	4	13	19	6	13	25
ø40	30	22	27	Rc1/4	9	27	35	52	M14X1.5	84(90)	4	16	6	14	4	14	19	8	13	21
ø50	35	27	32	Rc1/4	10.5	31.5	40	65	M18X1.5	94(102)	5	20	8	17	4	15.5	23.5	11	14	23
ø63	35	27	32	Rc3/8	12	31.5	45	75	M18X1.5	94(102)	9	20	8	17	4	16.5	21.5	11	14	23
ø80	40	32	37	Rc3/8	14	38	45	95	M22X1.5	114(124)	11.5	25	11	22	4	19	28	13	20	32
ø100	40	41	37	Rc1/2	15	38	55	114	M26X1.5	114(124)	17	30	13	27	4	19	28	16	20	32

Code / Bore size (mm)	Mounting dimensions								With switch					
	*1 FA	FC	FD	FH	*1 FJ	FL	FM	FT	O	P	T0,T5,T2,T3 RD	T0,T5,T2,T3 HD	T2W,T3W RD	T2W,T3W HD
ø32	141(147)	32	7	50	119(125)	64	79	10	59	38	5(8)	5(8)	7.5 (10.5)	7.5 (10.5)
ø40	145(151)	36	9	55	115(121)	72	90	10	66	41	5(8)	5(8)	7.5 (10.5)	7.5 (10.5)
ø50	164(172)	45	9	70	129(137)	90	110	12	72	43	6.5 (10.5)	5(9)	9(13)	7(11)
ø63	164(172)	50	9	80	129(137)	100	120	12	83	48	6.5 (10.5)	5(9)	9(13)	7(11)
ø80	202(212)	63	12	100	162(172)	126	153	16	104	57	12.5 (17.5)	6(11)	15(20)	8(13)
ø100	202(212)	75	14	120	162(172)	150	178	16	121	63	12(17)	6.5 (11.5)	14.5 (19.5)	8.5 (13.5)

Code / Bore size (mm)	With bellows														
	A	b	d	WF	ℓ										
					50 or less	Over 50 to 100	Over 100 to 150	Over 150 to 200	Over 200 to 300	Over 300 to 400	Over 400 to 500	Over 500 to 600	Over 600 to 700	Over 700 to 800	Over 800
ø32	22	31.5	38	25	26	39	51	64	89	114	139	0.35 x stroke-37			
ø40	30	35	40	21	30	43	55	68	93	118	143	0.35 x stroke-32			
ø50	35	42	47	23	31	44	56	69	94	119	144	169	0.35 x stroke-41		
ø63	35	42	47	23	31	44	56	69	94	119	144	169	0.35 x stroke-41		
ø80	40	50	53	32	29	42	54	67	92	117	142	167	192	217	0.35 x stroke-63
ø100	40	52.5	61	32	29	42	54	67	92	117	142	167	192	217	0.35 x stroke-63

Dimensions

● Eye bracket (CA)

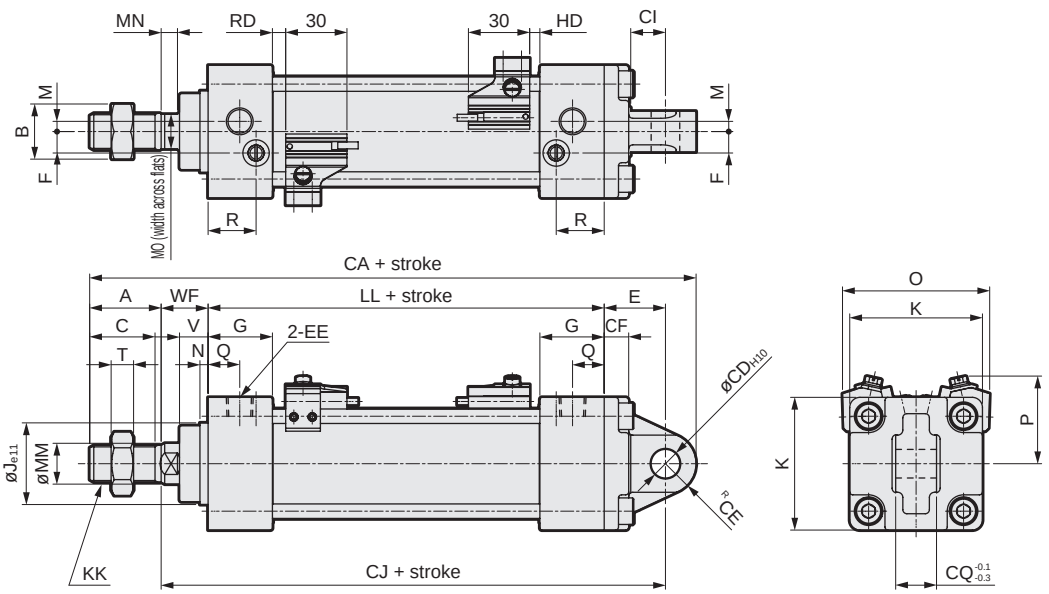

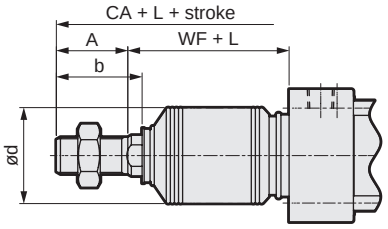

[With bellows]

*1: Dimensions in ( ) are for the rubber cushion.
*2: Refer to page 436 for HD, RD and protruding dimensions of other switches.
*3: For the dimensions of the accessories, refer to pages 372 and 373.

Code / Bore size (mm)	Eye bracket (CA) Basic dimensions																			
	A	B	C	EE	F	G	J	K	KK	*1 LL	M	MM	MN	MO	N	Q	R	T	V	WF
ø32	22	17	19.5	Rc1/8	6.5	27	30	46	M10X1.25	84 (90)	4	12	5.5	10	4	13	19	6	13	25
ø40	30	22	27	Rc1/4	9	27	35	52	M14X1.5	84 (90)	4	16	6	14	4	14	19	8	13	21
ø50	35	27	32	Rc1/4	10.5	31.5	40	65	M18X1.5	94 (102)	5	20	8	17	4	15.5	23.5	11	14	23
ø63	35	27	32	Rc3/8	12	31.5	45	75	M18X1.5	94 (102)	9	20	8	17	4	16.5	21.5	11	14	23
ø80	40	32	37	Rc3/8	14	38	45	95	M22X1.5	114 (124)	11.5	25	11	22	4	19	28	13	20	32
ø100	40	41	37	Rc1/2	15	38	55	114	M26X1.5	114 (124)	17	30	13	27	4	19	28	16	20	32

Code / Bore size (mm)	Mounting method								With switch					
	*1 CA	CD	CE	CF	CI	*1 CJ	CQ	E	O	P	T0, T5 ,T2, T3		T2W, T3W	
											RD	HD	RD	HD
ø32	164.5 (170.5)	10	10.5	9	13	132 (138)	14	23	59	38	5 (8)	5 (8)	7.5 (10.5)	7.5 (10.5)
ø40	169 (175)	10	11	9	13	128 (134)	14	23	66	41	5 (8)	5 (8)	7.5 (10.5)	7.5 (10.5)
ø50	197 (205)	14	15	12	17	147 (155)	20	30	72	43	6.5 (10.5)	5 (9)	9 (13)	7 (11)
ø63	197 (205)	14	15	12	17	147 (155)	20	30	83	48	6.5 (10.5)	5 (9)	9 (13)	7 (11)
ø80	251 (261)	22	23	15	26	188 (198)	30	42	104	57	12.5 (17.5)	6 (11)	15 (20)	8 (13)
ø100	251 (261)	22	23	15	26	188 (198)	30	42	121	63	12 (17)	6.5 (11.5)	14.5 (19.5)	8.5 (13.5)

Code / Bore size (mm)	With bellows														
	A	b	d	WF	L										
					50 or less	Over 50 to 100	Over 100 to 150	Over 150 to 200	Over 200 to 300	Over 300 to 400	Over 400 to 500	Over 500 to 600	Over 600 to 700	Over 700 to 800	Over 800
ø32	22	31.5	38	25	26	39	51	64	89	114	139	0.35 X stroke-37			
ø40	30	35	40	21	30	43	55	68	93	118	143	0.35 X stroke-32			
ø50	35	42	47	23	31	44	56	69	94	119	144	169	0.35 X stroke-41		
ø63	35	42	47	23	31	44	56	69	94	119	144	169	0.35 X stroke-41		
ø80	40	50	53	32	29	42	54	67	92	117	142	167	192	217	0.35 X stroke-63
ø100	40	52.5	61	32	29	42	54	67	92	117	142	167	192	217	0.35 X stroke-63

SCP*3
CMK2
CMA2
SCM
SCG
SCA2
SCS2
CKV2
CAV2/ COVP/N2
SSD2
SSG
SSD
CAT
MDC2
MVC
SMG
MSD/ MSDG
FC*
STK
SRL3
SRG3
SRM3
SRT3
MRL2
MRG2
SM-25
ShkAbs
FJ
FK
Spd Contr
Ending

Dimensions

CAD

● Clevis bracket (CB)

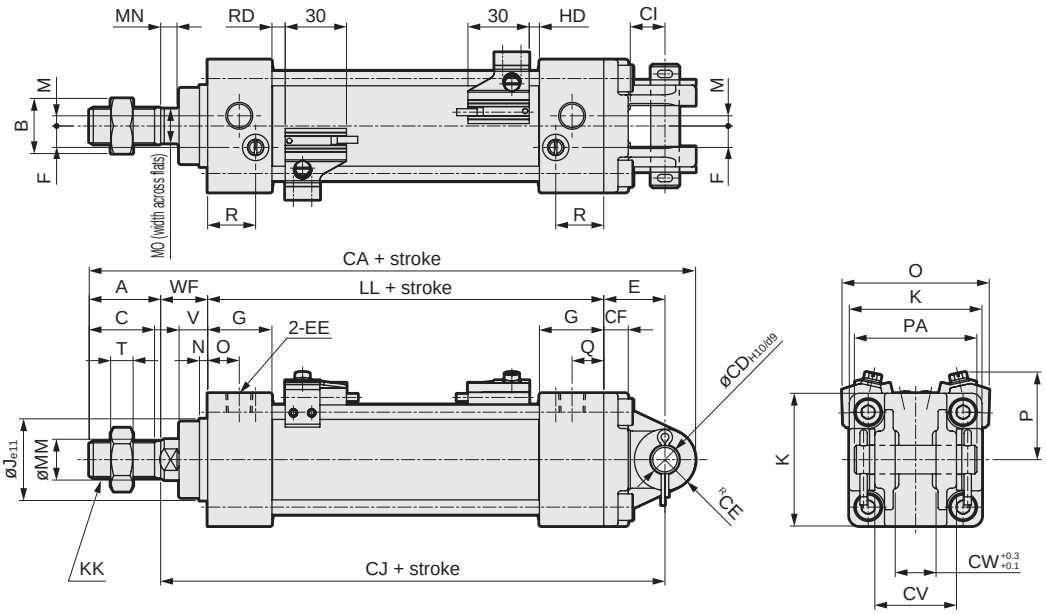

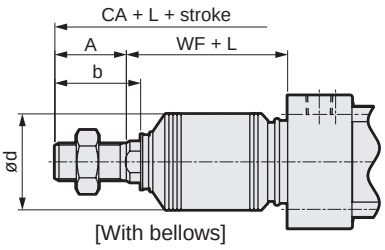

[With bellows]

*1: Dimensions in ( ) are for the rubber cushion.
*2: Refer to page 436 for HD, RD and protruding dimensions of other switches.
*3: For the dimensions of the accessories, refer to pages 372 and 373.

Code / Bore size (mm)	Clevis bracket (CB) Basic dimensions																			
	A	B	C	EE	F	G	J	K	KK	*1 LL	M	MM	MN	MO	N	Q	R	T	V	WF
ø32	22	17	19.5	Rc1/8	6.5	27	30	46	M10X1.25	84 (90)	4	12	5.5	10	4	13	19	6	13	25
ø40	30	22	27	Rc1/4	9	27	35	52	M14X1.5	84 (90)	4	16	6	14	4	14	19	8	13	21
ø50	35	27	32	Rc1/4	10.5	31.5	40	65	M18X1.5	94 (102)	5	20	8	17	4	15.5	23.5	11	14	23
ø63	35	27	32	Rc3/8	12	31.5	45	75	M18X1.5	94 (102)	9	20	8	17	4	16.5	21.5	11	14	23
ø80	40	32	37	Rc3/8	14	38	45	95	M22X1.5	114 (124)	11.5	25	11	22	4	19	28	13	20	32
ø100	40	41	37	Rc1/2	15	38	55	114	M26X1.5	114 (124)	17	30	13	27	4	19	28	16	20	32

Code / Bore size (mm)	Mounting method										With switch					
	*1 CA	CD	CE	CF	CI	*1 CJ	CV	CW	E	PA	O	P	T0, T5 ,T2, T3		T2W, T3W	
													RD	HD	RD	HD
ø32	164.5 (170.5)	10	10.5	9	13	132 (138)	28	14	23	44	59	38	5 (8)	5 (8)	7.5 (10.5)	7.5 (10.5)
ø40	169 (175)	10	11	9	13	128 (134)	28	14	23	44	66	41	5 (8)	5 (8)	7.5 (10.5)	7.5 (10.5)
ø50	197 (205)	14	15	12	17	147 (155)	40	20	30	60	72	43	6.5 (10.5)	5 (9)	9 (13)	7 (11)
ø63	197 (205)	14	15	12	17	147 (155)	40	20	30	60	83	48	6.5 (10.5)	5 (9)	9 (13)	7 (11)
ø80	251 (261)	22	23	15	26	188 (198)	60	30	42	82	104	57	12.5 (17.5)	6 (11)	15 (20)	8 (13)
ø100	251 (261)	22	23	15	26	188 (198)	60	30	42	82	121	63	12 (17)	6.5 (11.5)	14.5 (19.5)	8.5 (13.5)

Code / Bore size (mm)	With bellows														
	A	b	d	WF	L										
					50 or less	Over 50 to 100	Over 100 to 150	Over 150 to 200	Over 200 to 300	Over 300 to 400	Over 400 to 500	Over 500 to 600	Over 600 to 700	Over 700 to 800	Over 800
ø32	22	31.5	38	25	26	39	51	64	89	114	139	0.35 X stroke-37			
ø40	30	35	40	21	30	43	55	68	93	118	143	0.35 X stroke-32			
ø50	35	42	47	23	31	44	56	69	94	119	144	169	0.35 X stroke-41		
ø63	35	42	47	23	31	44	56	69	94	119	144	169	0.35 X stroke-41		
ø80	40	50	53	32	29	42	54	67	92	117	142	167	192	217	0.35 X stroke-63
ø100	40	52.5	61	32	29	42	54	67	92	117	142	167	192	217	0.35 X stroke-63

Dimensions

● Rod side trunnion (TA)

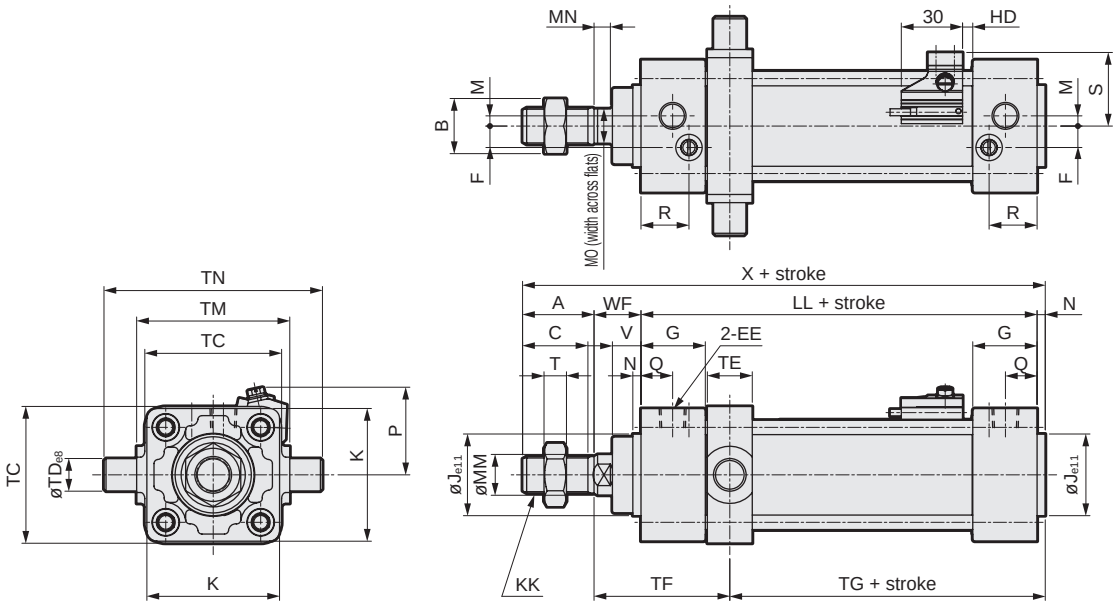

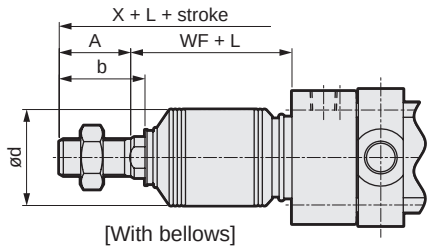

[With bellows]

*1: Dimensions in ( ) are for the rubber cushion.
*2: A switch cannot be installed on the rod side.
*3: Refer to page 436 for HD and protruding dimensions of other switches.
*4: For the dimensions of the accessories, refer to pages 372 and 373.

Code / Bore size (mm)	Rod side trunnion (TA) Basic dimensions																		
	A	B	C	EE	F	G	J	K	KK	*1 LL	M	MM	MN	MO	N	Q	R	T	V
ø32	22	17	19.5	Rc1/8	6.5	27	30	46	M10X1.25	84 (90)	4	12	5.5	10	4	13	19	6	13
ø40	30	22	27	Rc1/4	9	27	35	52	M14X1.5	84 (90)	4	16	6	14	4	14	19	8	13
ø50	35	27	32	Rc1/4	10.5	31.5	40	65	M18X1.5	94 (102)	5	20	8	17	4	15.5	23.5	11	14
ø63	35	27	32	Rc3/8	12	31.5	45	75	M18X1.5	94 (102)	9	20	8	17	4	16.5	21.5	11	14
ø80	40	32	37	Rc3/8	14	38	45	95	M22X1.5	114 (124)	11.5	25	11	22	4	19	28	13	20
ø100	40	41	37	Rc1/2	15	38	55	114	M26X1.5	114 (124)	17	30	13	27	4	19	28	16	20

Code / Bore size (mm)			Mounting method							With switch			
	WF	*1 X	TC	TD	TE	TF	*1 TG	TM	TN	S	P	T0, T5 ,T2, T3 HD	T2W, T3W HD
ø32	25	135 (141)	47	12	17	61.5	51.5 (57.5)	50	74	29.5	38	5 (8)	7.5 (10.5)
ø40	21	139 (145)	57	16	22	60	49 (55)	63	95	33	41	5 (8)	7.5 (10.5)
ø50	23	156 (164)	67	16	22	66.5	54.5 (62.5)	75	107	36	43	5 (9)	7 (11)
ø63	23	156 (164)	82	20	28	69.5	51.5 (59.5)	90	130	41.5	48	5 (9)	7 (11)
ø80	32	190 (200)	100	20	34	88	62 (72)	110	150	52	57	6 (11)	8 (13)
ø100	32	190 (200)	121	25	40	91	59 (69)	132	182	60.5	63	6.5 (11.5)	8.5 (13.5)

Code / Bore size (mm)	With bellows														
	A	b	d	WF	L										
					50 or less	Over 50 to 100	Over 100 to 150	Over 150 to 200	Over 200 to 300	Over 300 to 400	Over 400 to 500	Over 500 to 600	Over 600 to 700	Over 700 to 800	Over 800
ø32	22	31.5	38	25	26	39	51	64	89	114	139	0.35 X stroke-37			
ø40	30	35	40	21	30	43	55	68	93	118	143	0.35 X stroke-32			
ø50	35	42	47	23	31	44	56	69	94	119	144	169	0.35 X stroke-41		
ø63	35	42	47	23	31	44	56	69	94	119	144	169	0.35 X stroke-41		
ø80	40	50	53	32	29	42	54	67	92	117	142	167	192	217	0.35 X stroke-63
ø100	40	52.5	61	32	29	42	54	67	92	117	142	167	192	217	0.35 X stroke-63

SCP*3
CMK2
CMA2
SCM
SCG
SCA2
SCS2
CKV2
CAV2/ COVP/N2
SSD2
SSG
SSD
CAT
MDC2
MVC
SMG
MSD/ MSDG
FC*
STK
SRL3
SRG3
SRM3
SRT3
MRL2
MRG2
SM-25
ShkAbs
FJ
FK
Spd Contr
Ending

Dimensions

● Head side trunnion (TB)

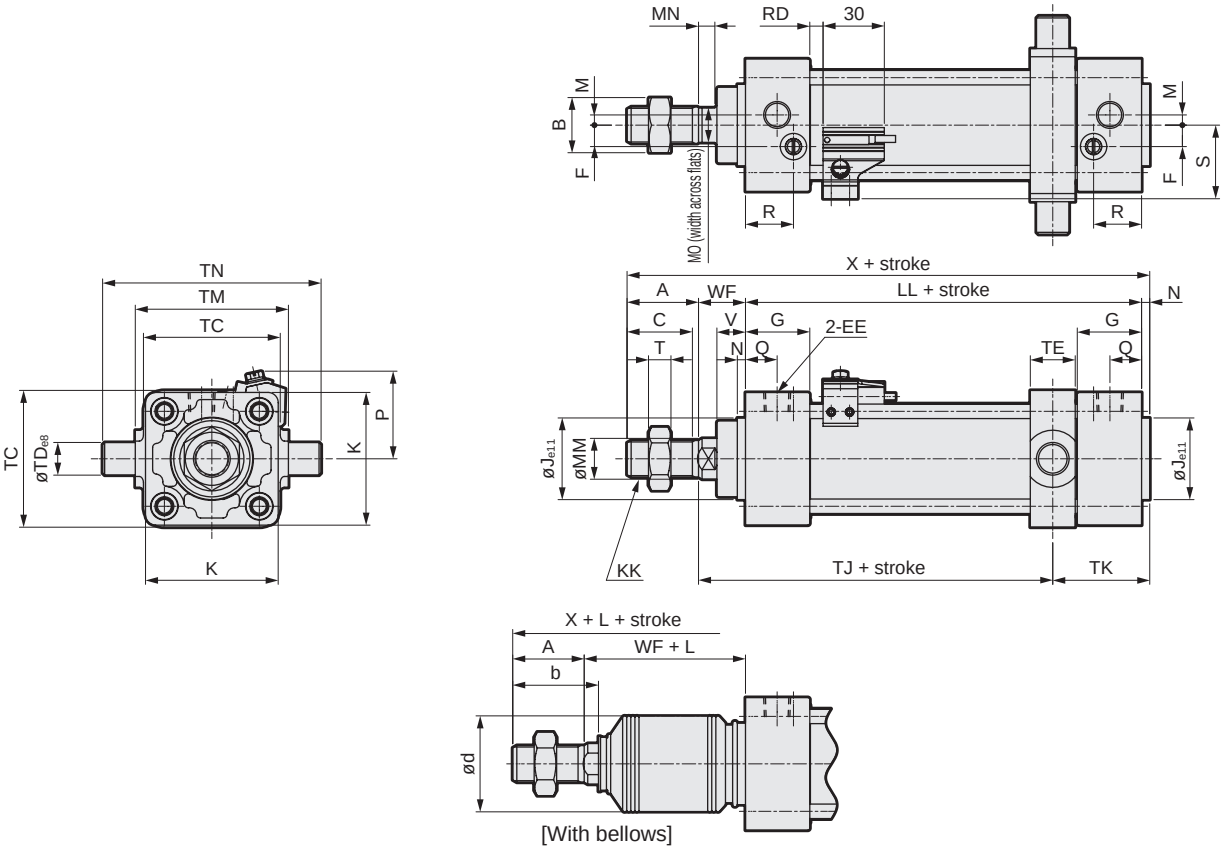

*1: Dimensions in ( ) are for the rubber cushion.
*2: A switch cannot be installed on the rod side.
*3: Refer to page 436 for RD and protruding dimensions of other switches.
*4: For the dimensions of the accessories, refer to pages 372 and 373.

Code / Bore size (mm)	Head side trunnion (TB) Basic dimensions																		
	A	B	C	EE	F	G	J	K	KK	*1 LL	M	MM	MN	MO	N	Q	R	T	V
ø32	22	17	19.5	Rc1/8	6.5	27	30	46	M10X1.25	84 (90)	4	12	5.5	10	4	13	19	6	13
ø40	30	22	27	Rc1/4	9	27	35	52	M14X1.5	84 (90)	4	16	6	14	4	14	19	8	13
ø50	35	27	32	Rc1/4	10.5	31.5	40	65	M18X1.5	94 (102)	5	20	8	17	4	15.5	23.5	11	14
ø63	35	27	32	Rc3/8	12	31.5	45	75	M18X1.5	94 (102)	9	20	8	17	4	16.5	21.5	11	14
ø80	40	32	37	Rc3/8	14	38	45	95	M22X1.5	114 (124)	11.5	25	11	22	4	19	28	13	20
ø100	40	41	37	Rc1/2	15	38	55	114	M26X1.5	114 (124)	17	30	13	27	4	19	28	16	20

Code / Bore size (mm)										With switch			
	WF	*1 X	TC	TD	TE	TJ	TK	TM	TN	S	P	T0, T5 ,T2, T3 RD	T2W, T3W RD
ø32	25	135 (141)	47	12	17	72.5 (78.5)	40.5	50	74	29.5	38	5 (8)	7.5 (10.5)
ø40	21	139 (145)	57	16	22	66 (72)	43	63	95	33	41	5 (8)	7.5 (10.5)
ø50	23	156 (164)	67	16	22	73.5 (81.5)	47.5	75	107	36	43	6.5 (10.5)	9 (13)
ø63	23	156 (164)	82	20	28	70.5 (78.5)	50.5	90	130	41.5	48	6.5 (10.5)	9 (13)
ø80	32	190 (200)	100	20	34	90 (100)	60	110	150	52	57	12.5 (17.5)	15 (20)
ø100	32	190 (200)	121	25	40	87 (97)	63	132	182	60.5	63	12 (17)	14.5 (19.5)

Code / Bore size (mm)	With bellows														
	A	b	d	WF	L										
					50 or less	Over 50 to 100	Over 100 to 150	Over 150 to 200	Over 200 to 300	Over 300 to 400	Over 400 to 500	Over 500 to 600	Over 600 to 700	Over 700 to 800	Over 800
ø32	22	31.5	38	25	26	39	51	64	89	114	139	0.35 X stroke-37			
ø40	30	35	40	21	30	43	55	68	93	118	143	0.35 X stroke-32			
ø50	35	42	47	23	31	44	56	69	94	119	144	169	0.35 X stroke-41		
ø63	35	42	47	23	31	44	56	69	94	119	144	169	0.35 X stroke-41		
ø80	40	50	53	32	29	42	54	67	92	117	142	167	192	217	0.35 X stroke-63
ø100	40	52.5	61	32	29	42	54	67	92	117	142	167	192	217	0.35 X stroke-63

Dimensions

● Intermediate trunnion (TC)

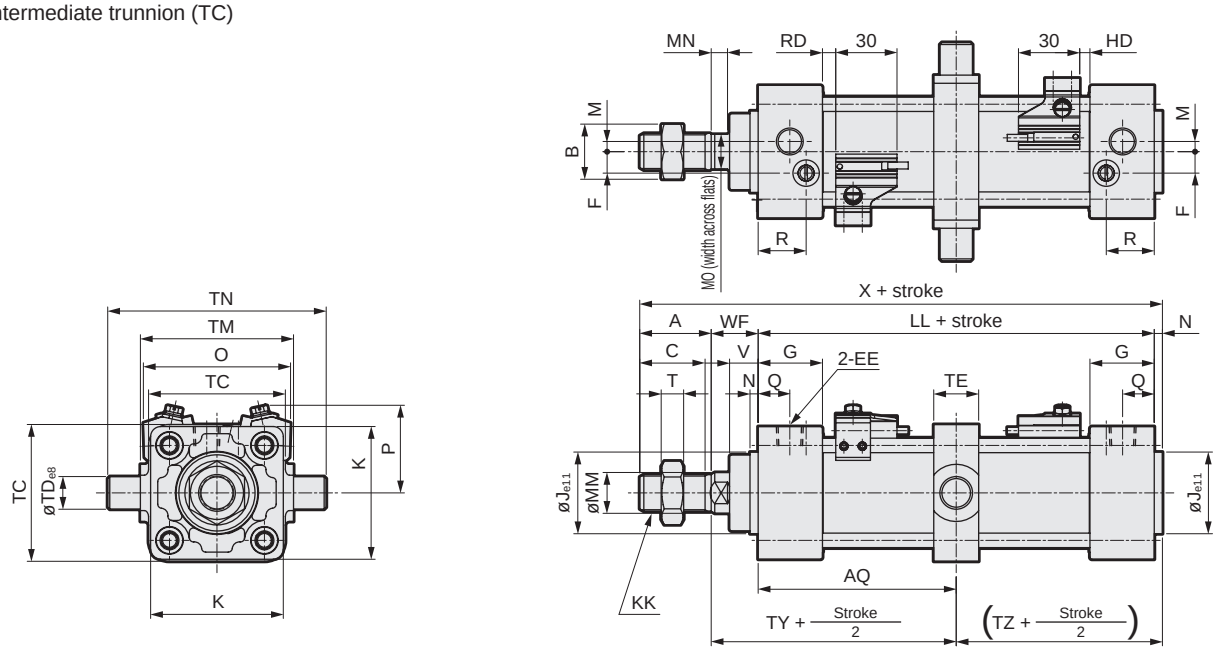

[With bellows]

*1: Dimensions in ( ) are for the rubber cushion.
*2: Refer to page 436 for HD, RD and protruding dimensions of other switches.
*3: For the dimensions of the accessories, refer to pages 372 and 373.

Code / Bore size (mm)	Intermediate trunnion (TC) Basic dimensions																				
	A	B	C	EE	F	G	J	K	KK	*1 LL	M	MM	MN	MO	N	Q	R	T	V	WF	*1 X
ø32	22	17	19.5	Rc1/8	6.5	27	30	46	M10X1.25	84 (90)	4	12	5.5	10	4	13	19	6	13	25	135 (141)
ø40	30	22	27	Rc1/4	9	27	35	52	M14X1.5	84 (90)	4	16	6	14	4	14	19	8	13	21	139 (145)
ø50	35	27	32	Rc1/4	10.5	31.5	40	65	M18X1.5	94 (102)	5	20	8	17	4	15.5	23.5	11	14	23	156 (164)
ø63	35	27	32	Rc3/8	12	31.5	45	75	M18X1.5	94 (102)	9	20	8	17	4	16.5	21.5	11	14	23	156 (164)
ø80	40	32	37	Rc3/8	14	38	45	95	M22X1.5	114 (124)	11.5	25	11	22	4	19	28	13	20	32	190 (200)
ø100	40	41	37	Rc1/2	15	38	55	114	M26X1.5	114 (124)	17	30	13	27	4	19	28	16	20	32	190 (200)

Code / Bore size (mm)	Mounting method								With switch					
	AQ	TC	TD	TE	TM	TN	*1 TY	*1 TZ	O	P	T0, T5 ,T2, T3		T2W, T3W	
											RD	HD	RD	HD
ø32	42 (45)+ Stroke/2	47	12	17	50	74	67 (70)	46 (49)	59	38	5 (8)	5 (8)	7.5 (10.5)	7.5 (10.5)
ø40	42 (45)+ Stroke/2	57	16	22	63	95	63 (66)	46 (49)	66	41	5 (8)	5 (8)	7.5 (10.5)	7.5 (10.5)
ø50	47 (51)+ Stroke/2	67	16	22	75	107	70 (74)	51 (55)	72	43	6.5 (10.5)	5 (9)	9 (13)	7 (11)
ø63	47 (51)+ Stroke/2	82	20	28	90	130	70 (74)	51 (55)	83	48	6.5 (10.5)	5 (9)	9 (13)	7 (11)
ø80	57 (62)+ Stroke/2	100	20	34	110	150	89 (94)	61 (66)	104	57	12.5 (17.5)	6 (11)	15 (20)	8 (13)
ø100	57 (62)+ Stroke/2	121	25	40	132	182	89 (94)	61 (66)	121	63	12 (17)	6.5 (11.5)	14.5 (19.5)	8.5 (13.5)

Code / Bore size (mm)	With bellows														
	A	b	d	WF	L										
					50 or less	Over 50 to 100	Over 100 to 150	Over 150 to 200	Over 200 to 300	Over 300 to 400	Over 400 to 500	Over 500 to 600	Over 600 to 700	Over 700 to 800	Over 800
ø32	22	31.5	38	25	26	39	51	64	89	114	139	0.35 X stroke-37			
ø40	30	35	40	21	30	43	55	68	93	118	143	0.35 X stroke-32			
ø50	35	42	47	23	31	44	56	69	94	119	144	169	0.35 X stroke-41		
ø63	35	42	47	23	31	44	56	69	94	119	144	169	0.35 X stroke-41		
ø80	40	50	53	32	29	42	54	67	92	117	142	167	192	217	0.35 X stroke-63
ø100	40	52.5	61	32	29	42	54	67	92	117	142	167	192	217	0.35 X stroke-63

SCP*3
CMK2
CMA2
SCM
SCG
SCA2
SCS2
CKV2
CAV2/ COVP/N2
SSD2
SSG
SSD
CAT
MDC2
MVC
SMG
MSD/ MSDG
FC*
STK
SRL3
SRG3
SRM3
SRT3
MRL2
MRG2
SM-25
ShkAbs
FJ
FK
Spd Contr
Ending

SCG Series common accessory dimensions (rod eye, clevis, bracket)

● Rod eye (I)

Material: Steel
Painted

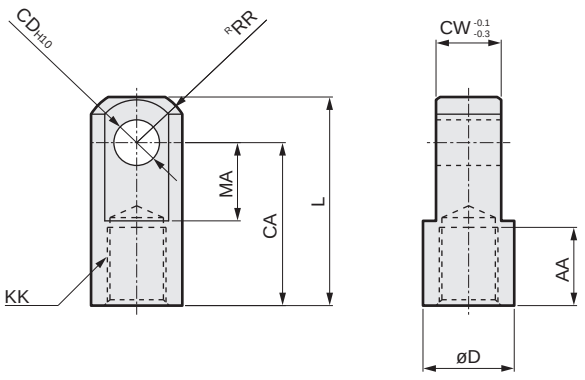

Model No.	Bore size (mm)	AA	CA	CD	CW	D	KK	L	MA	RR	Wt. (kg)
SCG-I-32	32	14	30	10	14	20	M10x1.25	40	16	12	0.07
SCG-I-40	40	19	40	10	14	22	M14x1.5	50	19	12.5	0.07
SCG-I-50	50, 63	24	50	14	20	28	M18x1.5	64	24	16.5	0.20
SCG-I-80	80	26	60	22	30	40	M22x1.5	80	34	23.5	0.52
SCG-I-100	100	26	60	22	30	40	M26x1.5	80	34	23.5	0.48

● Rod clevis (Y)

Material: Cast iron
Painted

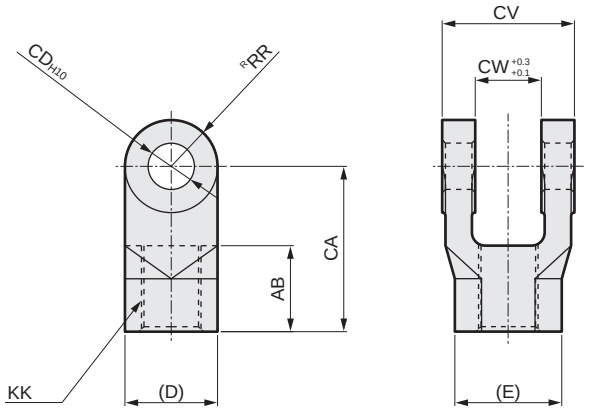

Model No.	Bore size (mm)	AB	CA	CD	CV	CW	D	E	KK	RR	Wt. (kg)
SCG-Y-32	32	14	30	10	28	14	20	20.1	M10x1.25	10	0.10
SCG-Y-40	40	21	40	10	28	14	22	22.4	M14x1.5	11	0.13
SCG-Y-50	50, 63	26	50	14	40	20	28	29.3	M18x1.5	14	0.30
SCG-Y-80	80	31	65	22	60	30	40	43.2	M22x1.5	20	0.94
SCG-Y-100	100	31	65	22	60	30	40	43.2	M26x1.5	20	0.92

Note: A pin, a split pin and a plain washer are included.

● Eye bracket (B1)

Material: Cast iron
Painted

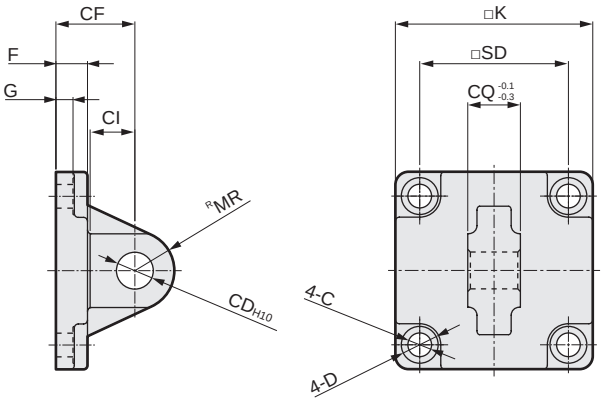

Model No.	Bore size (mm)	C	CD	CF	CI	CQ	D	F	G	K	MR	SD	Wt. (kg)
SCG-B1-32	32	6.6	10	23	13	14	11	9	4.5	46	10.5	32.5	0.13
SCG-B1-40	40	6.6	10	23	13	14	11	9	4.5	52	11	38	0.16
SCG-B1-50	50	9	14	30	17	20	14	12	6.5	65	15	46.5	0.38
SCG-B1-63	63	9	14	30	17	20	14	12	6.5	75	15	56.5	0.48
SCG-B1-80	80	11	22	42	26	30	17.5	15	8.5	95	23	72	1.19
SCG-B1-100	100	11	22	42	26	30	17.5	15	8.5	114	23	89	1.56

● Clevis bracket (B2)

Material: Cast iron
Painted

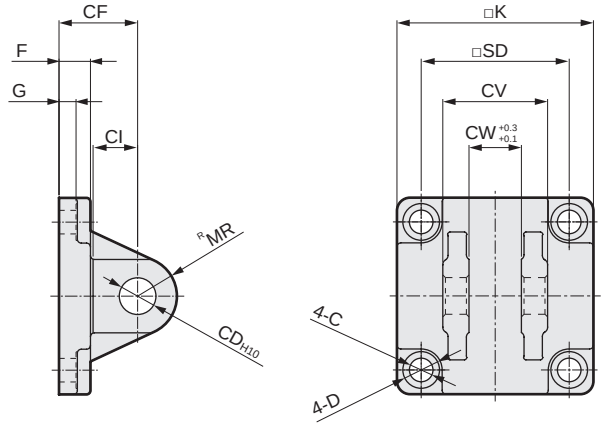

Model No.	Bore size (mm)	C	CD	CF	CI	CV	CW	D	F	G	K	MR	SD	Wt. (kg)
SCG-B2-32	32	6.6	10	23	13	28	14	11	9	4.5	46	10.5	32.5	0.16
SCG-B2-40	40	6.6	10	23	13	28	14	11	9	4.5	52	11	38	0.20
SCG-B2-50	50	9	14	30	17	40	20	14	12	6.5	65	15	46.5	0.46
SCG-B2-63	63	9	14	30	17	40	20	14	12	6.5	75	15	56.5	0.58
SCG-B2-80	80	11	22	42	26	60	30	17.5	15	8.5	95	23	72	1.52
SCG-B2-100	100	11	22	42	26	60	30	17.5	15	8.5	114	23	89	1.91

Note: A pin, a split pin and a plain washer are included.

Accessory dimensions

● Eye bracket (B3)

Material: Cast iron
Painted

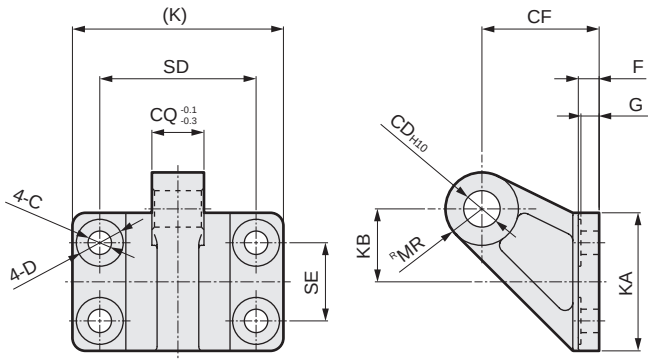

Model No.	Bore size (mm)	C	CD	CF	CQ	D	F	G	K	KA	KB	MR	SD	SE	Wt. (kg)
SCG-B3-32	32, 40	6.6	10	33	14	15	7	6	62	42	21	10	44	22	0.21
SCG-B3-50	50, 63	9	14	45	20	18	8	7	81	53	28	14	60	30	0.45
SCG-B3-80	80, 100	11	22	65	30	22	10	9	111	73	41.5	22	86	45	1.23

● Trunnion No. 2 bracket (B4)

Material: Cast iron
Painted

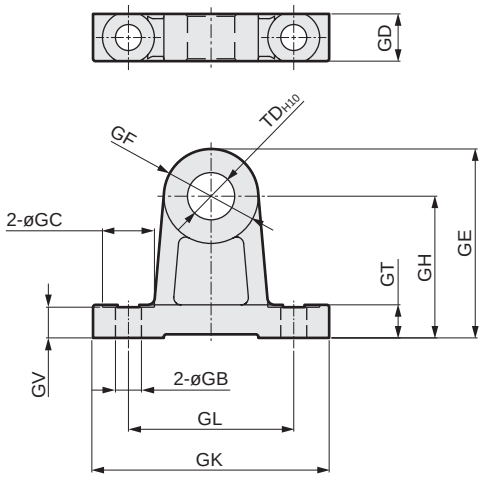

Model No.	Bore size (mm)	GB	GC	GD	GE	GF	GH	GK	GL	GT	GV	TD	Wt. (kg)
SCG-B4-32	32	7	13	12	47	24	35	62	45	10	9	12	0.20
SCG-B4-40	40, 50	9	18	17	60	30	45	80	60	12	11	16	0.43
SCG-B4-63	63, 80	11	22	20	80	40	60	100	70	14	13	20	0.87
SCG-B4-100	100	13.5	24	26	100	50	75	120	90	17	16	25	1.75

Note: The bracket is provided as 2 pcs./set.

● Pin (P)

Material: Steel
Trivalent chromate treatment

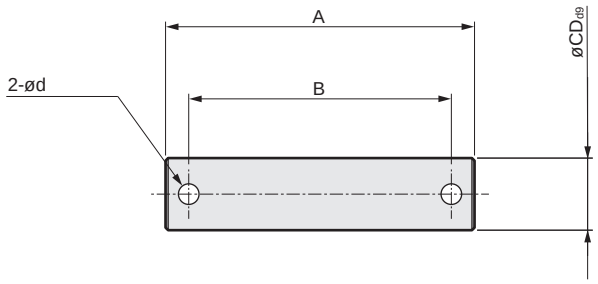

Model No.	Applicable bore size (mm)	A	B	CD	d	Weight (kg)
SCG-P-32	32, 40	44	36	10	3	0.04
SCG-P-50	50, 63	60	51	14	4	0.10
SCG-P-80	80, 100	82	72	22	4	0.34

Note: For clevis bracket/rod clevis/clevis bracket
Split pin and plain washer are included.

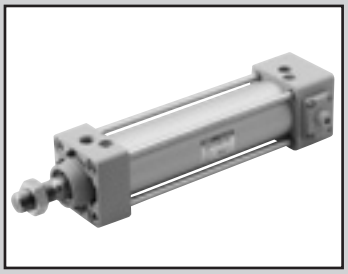

Tie rod cylinder Double acting/position locking

SCG-Q Series

● Bore size: ø32/ø40/ø50/ø63/ø80/ø100

JIS symbol

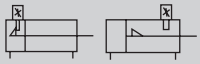

RoHS CAD

Specifications

Item		SCG-Q					
Bore size	mm	ø32	ø40	ø50	ø63	ø80	ø100
Actuation		Double acting					
Working fluid		Compressed air					
Max. working pressure	MPa	1.0 (≈150 psi, 10 bar)					
Min. working pressure	MPa	0.15 (≈22 psi, 1.5 bar)					
Proof pressure	MPa	1.6 (≈230 psi, 16 bar)					
Ambient temperature	°C	-10 (14°F) to 60 (140°F) (no freezing)					
Port size		Rc1/8	Rc1/4		Rc3/8		Rc1/2
Stroke tolerance	mm	$^{+1.0}_{0}$ (to 360), $^{+1.4}_{0}$ (361 to 1000), $^{+1.8}_{0}$ (1001 to 1500)					
Working piston speed	mm/s	30 to 1000 (Operate within the allowable absorbed energy.)					
Cushion		Air cushion					
Effective air cushion length	mm	8.6	8.6	13.4	13.4	15.4	15.4
Position locking mechanism		Head side, rod side					
Holding force		Max. thrust x 0.7					
Lubrication		Not required (use turbine oil class 1 ISO VG32 if necessary for lubrication)					
Allowable absorbed energy J	With air cushion	2.5	3.7	8.0	14.4	25.4	45.6

Stroke

Bore size (mm)	Standard stroke (mm)	Max. stroke (mm)	Available stroke (mm)	Min. stroke (mm)
ø32	25/50/75/100 150/200/250 300/350/400 450/500	600	700	5
ø40			800	
ø50			1200	
ø63			1200	
ø80		700	1400	
ø100		800	1500	

*1: The custom stroke is available in 1 mm increments.
*2: If the max. stroke is exceeded, product specifications may not be met, depending on operating conditions. Contact CKD in this case.

Min. stroke with T0/T5 switches

Switch quantity	Different surface mounting				Same surface mounting				Center trunnion mounting				Rod side trunnion mounting No position detection at rod side stroke end.	Head side trunnion mounting No position detection at head side stroke end.
Bore size (mm)	1	2	3	4	1	2	3	4	1	2	3	4	1	1
ø32	9	17	34	51	9	48(33)	78(64)	109(94)	94(94)	94(94)	169(155)	169(155)	42	42
ø40	9	18	36	54	9	48(33)	78(64)	109(94)	81(81)	81(81)	164(142)	164(142)	38	38
ø50	9	18	36	54	9	18	36	54	112(112)	112(112)	121(121)	121(121)	51	53
ø63	10	19	38	57	10	19	38	57	85(73)	85(73)	91(91)	91(91)	41	42
ø80	10	20	39	59	10	20	39	59	96(79)	96(79)	99(99)	99(99)	41	47
ø100	10	20	40	60	10	20	40	60	101(84)	101(84)	105(105)	105(105)	47	53

*1: The values in ( ) are of T*V (L-shaped lead wire).
*2: When the stroke is 15 mm or less, the two switches could turn ON at the same time. In this case, adjust switch mounting positions to be as far apart as possible.

Min. stroke with T8 switch

Switch quantity	Different surface mounting				Same surface mounting				Center trunnion mounting				Rod side trunnion mounting No position detection at rod side stroke end.	Head side trunnion mounting No position detection at head side stroke end.
Bore size (mm)	1	2	3	4	1	2	3	4	1	2	3	4	1	1
ø32	9	17	34	51	9	54(31)	84(62)	115(92)	100(100)	100(100)	191(161)	191(161)	45	45
ø40	9	18	36	54	9	54(31)	84(62)	115(92)	87(87)	87(87)	178(148)	178(148)	41	41
ø50	9	18	36	54	9	18	36	54	116(116)	116(116)	121(121)	121(121)	54	55
ø63	10	19	38	57	10	19	38	57	89(77)	89(77)	99(99)	99(99)	44	44
ø80	10	20	39	59	10	20	39	59	100(75)	100(75)	111(111)	111(111)	43	49
ø100	10	20	40	60	10	20	40	60	105(80)	105(80)	117(117)	117(117)	49	55

*1: The values in ( ) are of T*V (L-shaped lead wire).
*2: When the stroke is 15 mm or less, the two switches could turn ON at the same time. In this case, adjust switch mounting positions to be as far apart as possible.

Min. stroke with T2/T3 switches

Switch quantity	Different surface mounting				Same surface mounting				Center trunnion mounting				Rod side trunnion mounting No position detection at rod side stroke end.	Head side trunnion mounting No position detection at head side stroke end.
Bore size (mm)	1	2	3	4	1	2	3	4	1	2	3	4	1	1
ø32	5	10	20	30	5	40(33)	70(64)	101(94)	64(55)	64(55)	131(116)	131(116)	27	27
ø40	5	10	20	30	5	40(33)	70(64)	101(94)	69(60)	69(60)	152(121)	152(121)	32	32
ø50	5	10	20	30	5	10	20	30	71(62)	71(62)	71(61)	71(61)	31	32
ø63	6	11	21	32	6	11	21	32	77(68)	77(68)	77(68)	77(68)	37	38
ø80	6	11	22	33	6	11	22	33	88(79)	88(79)	88(80)	88(80)	37	43
ø100	6	11	22	33	6	11	22	33	93(84)	93(84)	93(85)	93(85)	43	49

*1: The values in ( ) are of T*V (L-shaped lead wire).
*2: When the stroke is 15 mm or less, the two switches could turn ON at the same time. In this case, adjust switch mounting positions to be as far apart as possible.

Min. stroke with T1/T2Y/T3Y/T2YD/T2W/T3W switches

Switch quantity	Different surface mounting				Same surface mounting				Center trunnion mounting				Rod side trunnion mounting No position detection at rod side stroke end.	Head side trunnion mounting No position detection at head side stroke end.
Bore size (mm)	1	2	3	4	1	2	3	4	1	2	3	4	1	1
ø32	6	11	22	33	6	62(49)	92(80)	123(110)	86(61)	86(61)	177(122)	177(122)	38	38
ø40	6	11	22	33	6	62(49)	92(80)	123(110)	91(66)	91(66)	182(127)	182(127)	43	43
ø50	6	12	24	36	6	12	24	36	93(68)	93(68)	93(68)	93(68)	42	43
ø63	6	12	24	36	6	12	24	36	99(74)	99(74)	99(74)	99(74)	48	49
ø80	7	13	25	38	7	13	25	38	110(85)	110(85)	110(86)	110(86)	48	54
ø100	7	13	26	39	7	13	26	39	115(90)	115(90)	115(92)	115(92)	54	60

*1: The values in ( ) are of T*V (L-shaped lead wire). T2YD does not have an L-shaped lead wire (V).
*2: When the stroke is 15 mm or less, the two switches could turn ON at the same time. In this case, adjust switch mounting positions to be as far apart as possible.

Switch specifications

● 1-color/2-color LED/for AC magnetic field proof

Item	2-wire proximity	2-wire proximity			3-wire proximity				2-wire reed							2-wire proximity
	T1H/ T1V	T2H/T2V/ T2JH/T2JV	T2YH/ T2YV	T2WH/ T2WV	T3H/ T3V	T3PH/ T3PV	T3YH/ T3YV	T3WH/ T3WV	T0H/T0V		T5H/T5V		T8H/T8V			T2YD (*4) T2YDT
Applications	Programming controller relay, compact solenoid valve	Dedicated for programmable controller			For programmable controller, relay				For programmable controller, relay		For programmable controller, relay (no lamp), serial		For programmable controller, relay			Dedicated for programmable controller
Output method	-				NPN output	PNP output	NPN output	NPN output	-							
Pwr. supp. V.	-				10 to 28 VDC				-							
Load voltage	85 to 265 VAC	10 to 30 VDC		24 VDC ±10%	30 VDC or less				12/24 VDC	110 VAC	5/12/24 VDC	110 VAC	12/24 VDC	110 VAC	220 VAC	24 VDC ±10%
Load current	5 to 100 mA	5 to 20 mA (*3)			100 mA or less		50 mA or less		5 to 50 mA	7 to 20 mA	50 mA or less	20 mA or less	5 to 50 mA	7 to 20 mA	7 to 10 mA	5 to 20 mA
Indicator	LED (Lit when ON)	LED (Lit when ON)	Red/green LED (Lit when ON)	Red/green LED (Lit when ON)	LED (Lit when ON)	Yellow LED (Lit when ON)	Red/green LED (Lit when ON)	Red/green LED (Lit when ON)	LED (Lit when ON)		No indicator lamp		LED (Lit when ON)			Red/green LED (Lit when ON)
Leakage current	≤ 1 mA at 100 VAC, ≤ 2 mA at 200 VAC	1 mA or less			10 μA or less				0 mA							1 mA or less
Weight g	1 m:33 3 m:87 5 m:142	1 m:18 3 m:49 5 m:80	1 m:33 3 m:87 5 m:142	1 m:18 3 m:49 5 m:80	1 m:18 3 m:49 5 m:80		1 m:33 3 m:87 5 m:142	1 m:18 3 m:49 5 m:80	1 m:18 3 m:49 5 m:80				1 m:33 3 m:87 5 m:142			1 m:61 3 m:166 5 m:272

*1: Refer to Ending Page 1 for detailed switch specifications and dimensions.
*2: Switches other than the above models, such as switches with connectors, are also available. Refer to Ending Page 1.
*3 : Max. load current: 20 mA at 25°C. The current is lower than 20 mA if the operating ambient temperature around the switch is higher than 25˚C. (5 to 10 mA at 60°C)
*4 : Switch for AC magnetic field (T2YD/T2YDT) cannot be used in DC magnetic field.

Weight table

(Unit: kg)

Bore size (mm)	Product weight for 0 mm stroke						Stroke:Added weight/50 mm	Switch weight (per 1 pc)	Switch bracket	Accessory weight	
	Basic (00)	Foot (LB)	Flange (FA, FB)	Eye bracket (CA)	Clevis bracket (CB)	Trunnion (TA, TB, TC)				I	Y
ø32	0.69	0.8	0.91	0.84	0.87	0.86	0.12	Refer to the weight in the switch specifications.	0.024	0.07	0.10
ø40	1.03	1.17	1.31	1.21	0.85	1.37	0.17		0.024	0.07	0.13
ø50	1.69	1.85	2.17	2.10	2.10	2.17	0.23		0.022	0.20	0.30
ø63	2.03	2.37	2.79	2.59	2.60	2.91	0.25		0.022	0.20	0.30
ø80	3.96	4.39	5.53	5.23	5.24	5.45	0.40		0.026	0.52	0.94
ø100	5.74	6.6	8.06	7.46	7.49	8.31	0.51		0.024	0.48	0.92

SCP*3
CMK2
CMA2
SCM
SCG
SCA2
SCS2
CKV2
CAV2/COVP/N2
SSD2
SSG
SSD
CAT
MDC2
MVC
SMG
MSD/MSDG
FC*
STK
SRL3
SRG3
SRM3
SRT3
MRL2
MRG2
SM-25
ShkAbs
FJ
FK
Spd Contr
Ending

How to order

No switch (built-in magnet for switch)

SCG-Q - LB - 40 ◯ B - 100 - H ———— M1 I

With switch (built-in magnet for switch)

SCG-Q - LB - 40 ◯ B - 100 - H - T2H - R - M1 I

Model No.

Ⓐ Mounting *1

Ⓑ Bore size

Ⓒ Port thread

Ⓓ Cushion

Ⓔ Stroke

Ⓕ Position locking mechanism

Ⓖ Switch model No.

Ⓗ Switch quantity *3

Ⓘ Option *4 *5

Ⓙ Accessory *6

Code	Description
Ⓐ Mounting	
00	Basic
LB	Axial foot
FA	Rod side flange
FB	Head side flange
CA	Eye bracket
CB	Clevis bracket (pin and split pin included)
TA	Rod side trunnion
TB	Head side trunnion
TC	Intermediate trunnion

Ⓑ Bore size (mm)	
32	ø32
40	ø40
50	ø50
63	ø63
80	ø80
100	ø100

Ⓒ Port thread	
Blank	Rc thread
N	NPT thread (made-to-order product)
G	G thread (made-to-order product)

Ⓓ Cushion	
B	Two-sided air cushion (basic)

Ⓔ Stroke (mm)

Bore size	Stroke *2	Available stroke	Custom stroke
ø32	5 to 600	700	In 1 mm increments
ø40		800	
ø50		1200	
ø63			
ø80	5 to 700	1400	
ø100	5 to 800	1500	

Ⓕ Position locking mechanism	
H	With head side position locking
R	With rod side position locking

Ⓖ Switch model No.

Axial lead wire	Radial lead wire	Contact	Voltage AC	Voltage DC	Indicator	Lead wire
TOH*	**T0V***	Reed	●	●	1-color LED	2-wire
T5H*	**T5V***	Reed	●	●	No indicator lamp	2-wire
T8H*	**T8V***	Reed	●	●	1-color LED	2-wire
T1H*	**T1V***	Proximity	●		1-color LED	2-wire
T2H*	**T2V***	Proximity		●	1-color LED	2-wire
T3H*	**T3V***	Proximity		●	1-color LED	3-wire
T3PH*	**T3PV***	Proximity		●	1-color LED	3-wire
T2WH*	**T2WV***	Proximity		●	2-color LED	2-wire
T2YH*	**T2YV***	Proximity		●	2-color LED	2-wire
T3WH*	**T3WV***	Proximity		●	2-color LED	3-wire
T3YH*	**T3YV***	Proximity		●	2-color LED	3-wire
T2YD*	**-**	Proximity		●	2-color LED	2-wire
T2YDT*	**-**	Proximity		●	AC magnetic field	2-wire
T2JH*	**T2JV***	Proximity		●	1-color LED off-delay	2-wire

*** Lead wire length**	
Blank	1 m (standard)
3	3 m (option)
5	5 m (option)

Ⓗ Switch quantity	
R	1 on rod side
H	1 on head side
D	2
T	3

Ⓘ Option	
Blank	Basic position locking
MO	Non-locking manual override (with release bolt)
M1	Locking manual override
M	Piston rod material (stainless steel)
P6	Copper and PTFE free

Ⓙ Accessory	
I	Rod eye
Y	Rod clevis (pin and split pin included)
B1	Eye bracket
B2	Clevis bracket (pin and split pin included)
B3	Eye bracket
B4	Trunnion No. 2 bracket (2 pcs./set)

⚠ Precautions for model No. selection

*1 : Mounting bracket will be shipped with the product. (Trunnion are assembled at shipment.)
TA mounting with R position locking mechanism is not available.
TB mounting with H position locking mechanism is not available.

*2 : Refer to pages 374 and 375 for the min. stroke with switch.

*3 : When selecting TA or TB as mounting, the number of switches is limited to "H" (1 on head side) for TA, and "R" (1 on rod side) for TB.

*4 : The instantaneous max. temperature is the temperature when sparks, cutting chips, etc., instantaneously contact the bellows.

*5 : Only non-locking manual override unless "M0" or "M1" of ● Option is selected. Release bolt is not included.

*6 : "I" and "Y" cannot be selected together.

[Example of model No.]

SCG-Q-LB-40B-100-H-T2H-D-I

Model: Tie rod cylinder, double acting/position locking

Ⓐ Mounting	: Axial foot
Ⓑ Bore size	: ø40 mm
Ⓒ Port thread	: Rc thread
Ⓓ Cushion	: With two-sided air cushion
Ⓔ Stroke	: 100 mm
Ⓕ Position locking mechanism	: With head side position locking
Ⓖ Switch model No.	: Proximity T2H switch, lead wire 1 m
Ⓗ Switch quantity	: 2
Ⓘ Option	: Basic position locking
Ⓙ Accessory	: Rod eye (included product)

How to order switch

● Switch body + mounting bracket set

SCG - T0H - 40

Switch model No. (Item Ⓖ on page 376)
Bore size (Item Ⓑ on page 376)

● Switch body only

SW - T0H

Switch model No. (Item Ⓖ on page 376)

Note: Contact CKD when using an environment-friendly T-switch.

● Switch mounting bracket set

SCG - T - 40

Mounting bracket
Bore size (Item Ⓑ on page 376)

How to order mounting bracket

Bore size (mm) / Mounting bracket	ø32	ø40	ø50	ø63	ø80	ø100
Foot (LB)	SCG-LB-32	SCG-LB-40	SCG-LB-50	SCG-LB-63	SCG-LB-80	SCG-LB-100
Flange (FA) (FB)	SCG-FA-32	SCG-FA-40	SCG-FA-50	SCG-FA-63	SCG-FA-80	SCG-FA-100
Eye bracket (CA)	SCG-CA-32	SCG-CA-40	SCG-CA-50	SCG-CA-63	SCG-CA-80	SCG-CA-100
Clevis bracket (CB)	SCG-CB-32	SCG-CB-40	SCG-CB-50	SCG-CB-63	SCG-CB-80	SCG-CB-100

*1: The foot mounting bracket (LB) is provided as 2 pcs./set.
*2: All mounting brackets are supplied with mounting bolts.

Specifications for rechargeable battery

(Catalog No. CC-1226A)

● Design is compatible with rechargeable battery manufacturing process.

SCG-Q -…- P4*

* Contact CKD for details.

Theoretical thrust table

(Unit: N)

Bore size (mm)	Operating direction	Working pressure MPa									
		0.15	0.2	0.3	0.4	0.5	0.6	0.7	0.8	0.9	1.0
ø32	Push	1.21×10^2	1.61×10^2	2.41×10^2	3.22×10^2	4.02×10^2	4.83×10^2	5.63×10^2	6.43×10^2	7.24×10^2	8.04×10^2
	Pull	1.04×10^2	1.38×10^2	2.07×10^2	2.76×10^2	3.46×10^2	4.15×10^2	4.84×10^2	5.53×10^2	6.22×10^2	6.91×10^2
ø40	Push	1.88×10^2	2.51×10^2	3.77×10^2	5.03×10^2	6.28×10^2	7.54×10^2	8.80×10^2	1.01×10^3	1.13×10^3	1.26×10^3
	Pull	1.58×10^2	2.11×10^2	3.17×10^2	4.22×10^2	5.28×10^2	6.33×10^2	7.39×10^2	8.44×10^2	9.50×10^2	1.06×10^3
ø50	Push	2.95×10^2	3.93×10^2	5.89×10^2	7.85×10^2	9.82×10^2	1.18×10^3	1.37×10^3	1.57×10^3	1.77×10^3	1.96×10^3
	Pull	2.47×10^2	3.30×10^2	4.95×10^2	6.60×10^2	8.25×10^2	9.90×10^2	1.15×10^3	1.32×10^3	1.48×10^3	1.65×10^3
ø63	Push	4.68×10^2	6.23×10^2	9.35×10^2	1.25×10^3	1.56×10^3	1.87×10^3	2.18×10^3	2.49×10^3	2.81×10^3	3.12×10^3
	Pull	4.20×10^2	5.61×10^2	8.41×10^2	1.12×10^3	1.40×10^3	1.68×10^3	1.96×10^3	2.24×10^3	2.52×10^3	2.80×10^3
ø80	Push	7.54×10^2	1.01×10^3	1.51×10^3	2.01×10^3	2.51×10^3	3.02×10^3	3.52×10^3	4.02×10^3	4.52×10^3	5.03×10^3
	Pull	6.80×10^2	9.07×10^2	1.36×10^3	1.81×10^3	2.27×10^3	2.72×10^3	3.17×10^3	3.63×10^3	4.08×10^3	4.54×10^3
ø100	Push	1.18×10^3	1.57×10^3	2.36×10^3	3.14×10^3	3.93×10^3	4.71×10^3	5.50×10^3	6.28×10^3	7.07×10^3	7.85×10^3
	Pull	1.07×10^3	1.43×10^3	2.14×10^3	2.86×10^3	3.57×10^3	4.29×10^3	5.00×10^3	5.72×10^3	6.43×10^3	7.15×10^3

SCP*3
CMK2
CMA2
SCM
SCG
SCA2
SCS2
CKV2
CAV2/ COVP/N2
SSD2
SSG
SSD
CAT
MDC2
MVC
SMG
MSD/ MSDG
FC*
STK
SRL3
SRG3
SRM3
SRT3
MRL2
MRG2
SM-25
ShkAbs
FJ
FK
Spd Contr
Ending

Internal structure

● With head side position locking

ø100

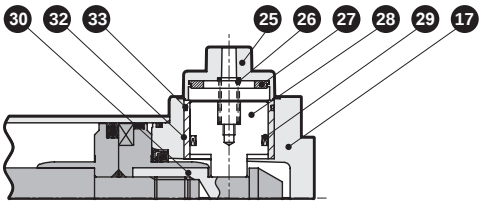

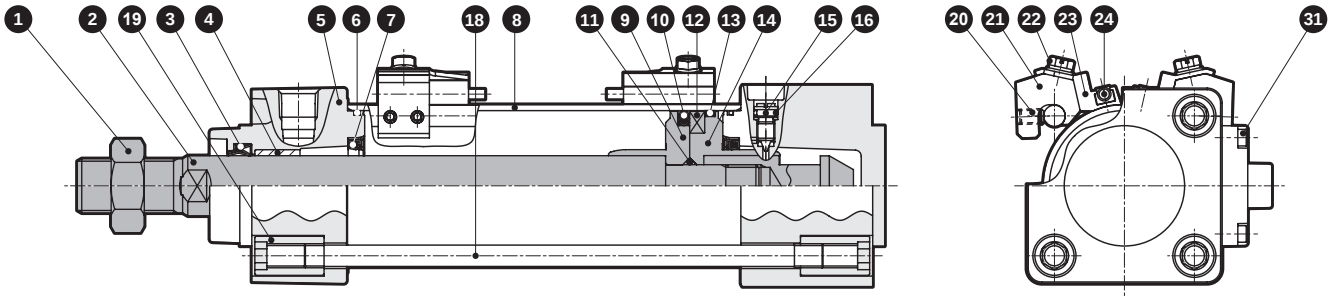

● With rod side position locking

ø100

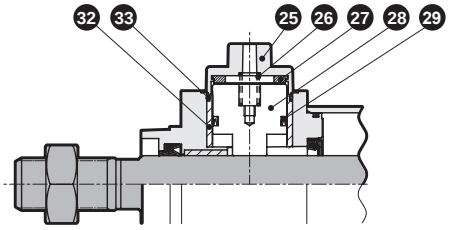

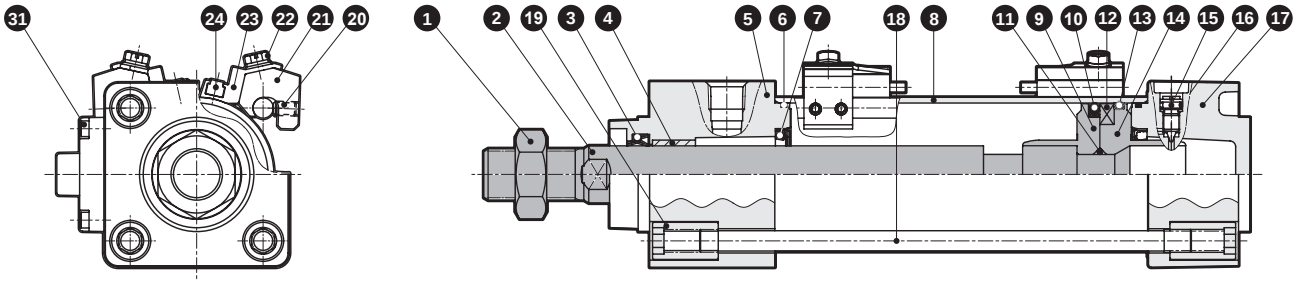

Parts list

No.	Part name	Material	Remarks
1	Rod nut	Steel	Nickel plating
2	Piston rod	Steel	Industrial chrome plating
3	Rod packing	Nitrile rubber	
4	Bush	Oil-impregnated bearing alloy	
5	Rod cover	With head side position locking: Aluminum alloy die-casting With rod side position locking: Aluminum alloy casting	Paint
6	Cylinder gasket	Nitrile rubber	
7	Cushion packing	Nitrile rubber, steel	With air cushion only
8	Cylinder tube	Aluminum alloy	Hard alumite treatment
9	Piston R	ø32, ø40: Aluminum alloy ø50 to ø100: Aluminum alloy die-casting	
10	Piston packing	Nitrile rubber	
11	Piston gasket	Nitrile rubber	
12	Magnet	Plastic	
13	Wear ring	Polyacetal resin	
14	Piston H	ø32, ø40: Aluminum alloy ø50 to ø100: Aluminum alloy die-casting	
15	Cushion needle	Copper alloy	Nickel plating
16	Needle gasket	Nitrile rubber	
17	Head cover	With head side position locking: Aluminum alloy casting With rod side position locking: Aluminum alloy die-casting	Paint
18	Tie rod	Steel	Zinc chromate treatment
19	Round nut	Steel	Zinc chromate treatment
20	Hexagon socket set screw	Steel	Black finish
21	Switch mounting base	Aluminum alloy	
22	Slotted head hexagon head bolt with captive washer	Stainless steel	
23	Switch holder	Aluminum alloy	
24	Cylinder switch		
25	Stopper cover	Aluminum die-casting	Paint
26	Spring	Steel	
27	Cushion rubber B	Urethane rubber	
28	Stopper piston	Steel	Nitriding
29	Piston packing B	Nitrile rubber	
30	Sleeve	Steel	Nitriding
31	Hexagon socket head cap screw	Stainless steel	
32	Housing	Aluminum alloy casting	ø100 only
33	O-ring	Nitrile rubber	ø100 only

Repair parts list

Bore size (mm)	Kit No.	Repair parts No.
ø32	SCG-Q-32BK	3 6 7 10 13 16 27 29
ø40	SCG-Q-40BK	
ø50	SCG-Q-50BK	
ø63	SCG-Q-63BK	
ø80	SCG-Q-80BK	
ø100	SCG-Q-100BK	3 6 7 10 13 16 27 29 33

Note: Specify the kit No. when placing an order.

Material of mounting bracket

Mounting	Material	Remarks
LB	Steel	Nickel plating
FA/FB	Steel	Paint
CA/CB	Cast iron	Paint
TA/TB/TC	Cast iron	Paint

Note: Mounting bracket will be shipped with the product.
For trunnion type (TA, TB or TC) with bellows and mounting format LB or FA, it will be shipped assembled with the product.

SCP*3
CMK2
CMA2
SCM
SCG
SCA2
SCS2
CKV2
CAV2/ COVP/N2
SSD2
SSG
SSD
CAT
MDC2
MVC
SMG
MSD/ MSDG
FC*
STK
SRL3
SRG3
SRM3
SRT3
MRL2
MRG2
SM-25
ShkAbs
FJ
FK
Spd Contr
Ending

Dimensions

● Basic (00) with head side position locking

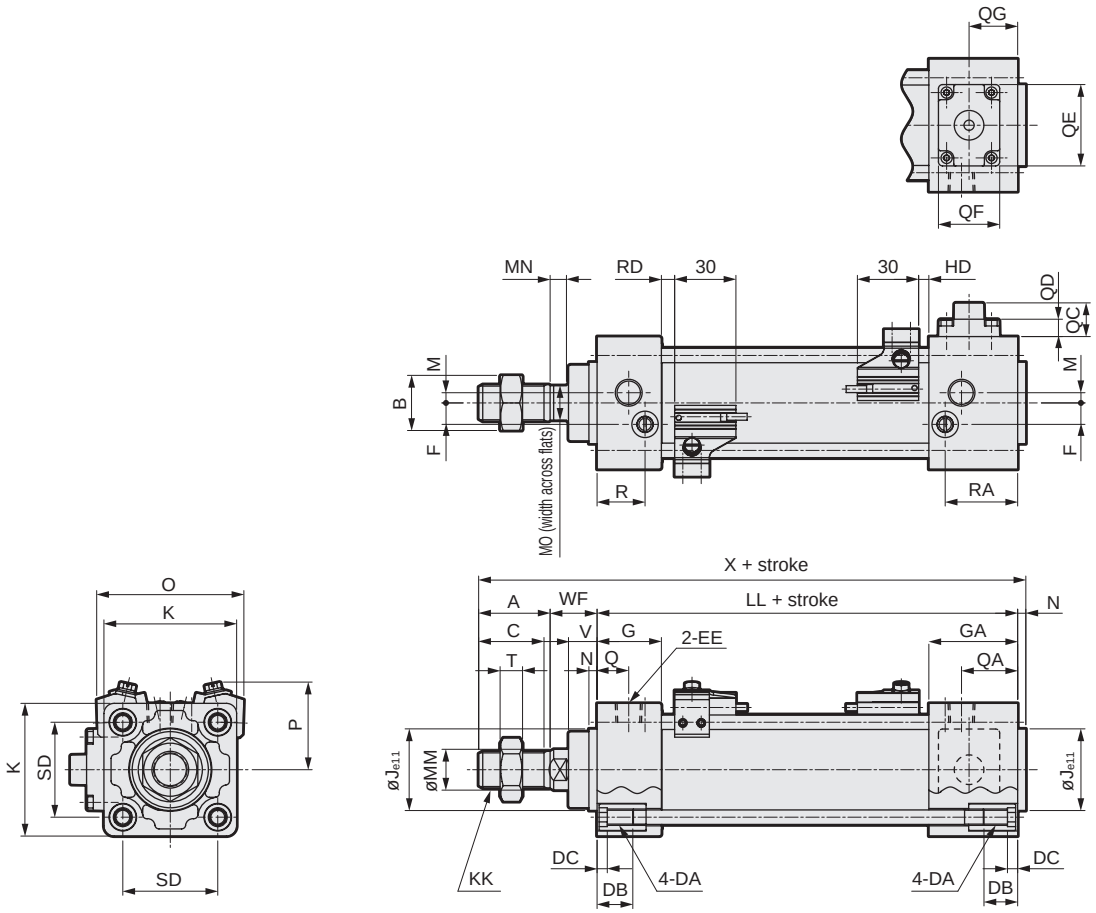

*1: Refer to page 436 for HD, RD and protruding dimensions of other switches.
*2: For the dimensions of the accessories, refer to pages 372 and 373.

Code / Bore size (mm)	Basic (00) with head side position locking basic dimensions																		
	A	B	C	DA	DB	DC	EE	F	G	GA	J	K	KK	LL	M	MM	MN	MO	N	Q
ø32	22	17	19.5	M6	16	5	Rc1/8	6.5	27	35	30	46	M10X1.25	92	4	12	5.5	10	4	13
ø40	30	22	27	M6	16	5	Rc1/4	9	27	40	35	52	M14X1.5	97	4	16	6	14	4	14
ø50	35	27	32	M8	16	5	Rc1/4	10.5	31.5	43.5	40	65	M18X1.5	106	5	20	8	17	4	15.5
ø63	35	27	32	M8	16	5	Rc3/8	12	31.5	43.5	45	75	M18X1.5	106	9	20	8	17	4	16.5
ø80	40	32	37	M10	16	5	Rc3/8	14	38	56	45	95	M22X1.5	132	11.5	25	11	22	4	19
ø100	40	41	37	M10	16	5	Rc1/2	15	38	56	55	114	M26X1.5	132	17	30	13	27	4	19

Code / Bore size (mm)														With switch					
	QA	QC	QD	QE	QF	QG	R	RA	SD	T	V	WF	X	O	P	T0, T5 ,T2, T3		T2W, T3W	
																RD	HD	RD	HD
ø32	21	12.5	6.5	22	16	17.5	19	27	32.5	6	13	25	143	59	38	5	5	7.5	7.5
ø40	27	12	6	22	16	18.5	19	32	38	8	13	21	152	66	41	5	5	7.5	7.5
ø50	27.5	16.5	8.5	40	30	23.8	23.5	35.5	46.5	11	14	23	168	72	43	6.5	5	9	7
ø63	28.5	11.5	3.5	40	30	23.8	21.5	33.5	56.5	11	14	23	168	83	48	6.5	5	9	7
ø80	38	10	2	40	30	27.5	28	47	72	13	20	32	208	104	57	12.5	6	15	8
ø100	37	11	3	40	30	27.5	28	46	89	16	20	32	208	121	63	12	6.5	14.5	8.5

Dimensions

● Basic (00) with rod side position locking

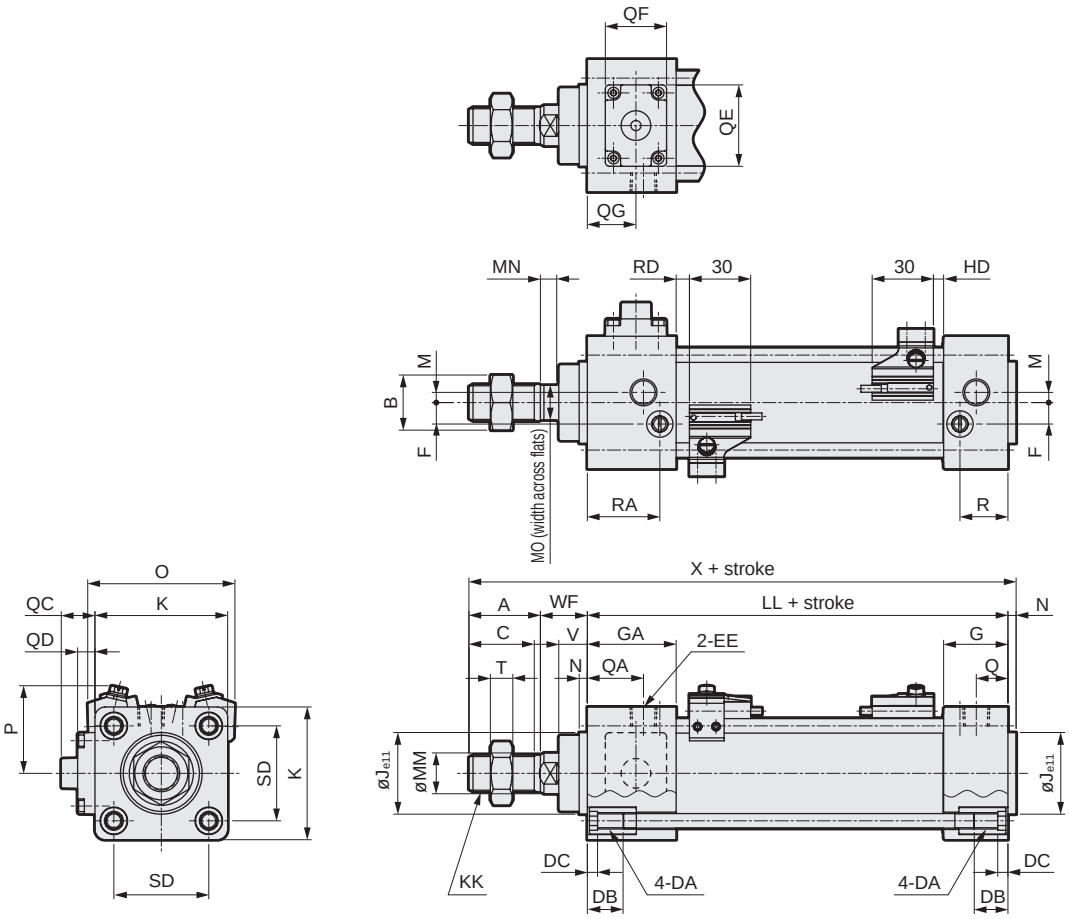

*1: Refer to page 436 for HD, RD and protruding dimensions of other switches.
*2: For the dimensions of the accessories, refer to pages 372 and 373.

Code / Bore size (mm)	Basic (00) with rod side position locking basic dimensions																		
	A	B	C	DA	DB	DC	EE	F	G	GA	J	K	KK	LL	M	MM	MN	MO	N	Q
ø32	22	17	19.5	M6	16	5	Rc1/8	6.5	27	35	30	46	M10X1.25	92	4	12	5.5	10	4	13
ø40	30	22	27	M6	16	5	Rc1/4	9	27	40	35	52	M14X1.5	97	4	16	6	14	4	14
ø50	35	27	32	M8	16	5	Rc1/4	10.5	31.5	43.5	40	65	M18X1.5	106	5	20	8	17	4	15.5
ø63	35	27	32	M8	16	5	Rc3/8	12	31.5	43.5	45	75	M18X1.5	106	9	20	8	17	4	16.5
ø80	40	32	37	M10	16	5	Rc3/8	14	38	56	45	95	M22X1.5	132	11.5	25	11	22	4	19
ø100	40	41	37	M10	16	5	Rc1/2	15	38	56	55	114	M26X1.5	132	17	30	13	27	4	19

Code / Bore size (mm)														With switch					
	QA	QC	QD	QE	QF	QG	R	RA	SD	T	V	WF	X	O	P	T0, T5 ,T2, T3		T2W, T3W	
																RD	HD	RD	HD
ø32	21	12.5	6.5	22	16	17.5	19	27	32.5	6	13	25	143	59	38	5	5	7.5	7.5
ø40	27	12	6	22	16	18.5	19	32	38	8	13	21	152	66	41	5	5	7.5	7.5
ø50	27.5	16.5	8.5	40	30	23.8	23.5	35.5	46.5	11	14	23	168	72	43	6.5	5	9	7
ø63	28.5	11.5	3.5	40	30	23.8	21.5	33.5	56.5	11	14	23	168	83	48	6.5	5	9	7
ø80	37	10	2	40	30	27.5	28	46	72	13	20	32	208	104	57	12.5	6	15	8
ø100	37	11	3	40	30	31.5	28	46	89	16	20	32	208	121	63	12	6.5	14.5	8.5

SCP*3
CMK2
CMA2
SCM
SCG
SCA2
SCS2
CKV2
CAV2/ COVP/N2
SSD2
SSG
SSD
CAT
MDC2
MVC
SMG
MSD/ MSDG
FC*
STK
SRL3
SRG3
SRM3
SRT3
MRL2
MRG2
SM-25
ShkAbs
FJ
FK
Spd Contr
Ending

Dimensions

CAD

● Axial foot (LB) with head side position locking

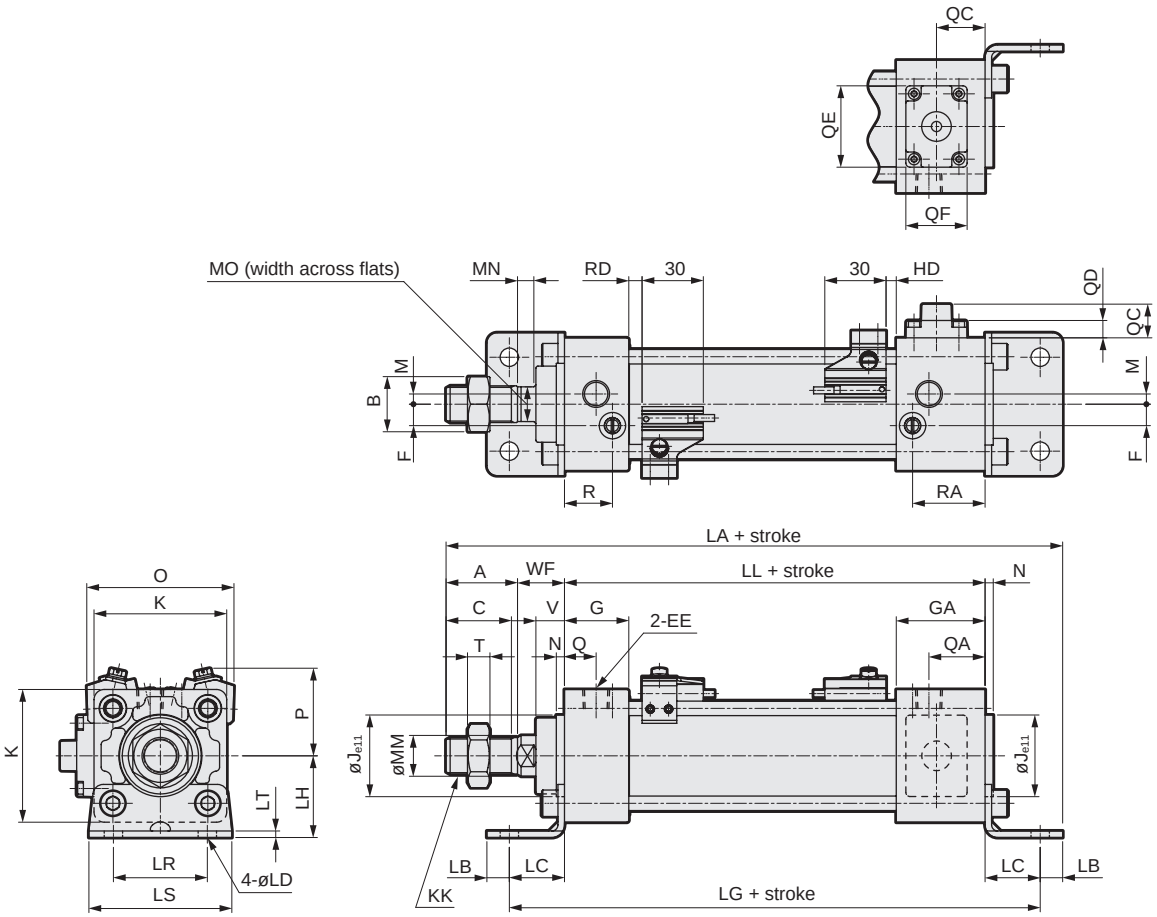

*1: Refer to page 436 for HD, RD and protruding dimensions of other switches.
*2: For the dimensions of the accessories, refer to pages 372 and 373.

Code / Bore size (mm)	Axial foot (LB) with head side position locking basic dimensions																					
	A	B	C	EE	F	G	GA	J	K	KK	LL	M	MM	MN	MO	N	Q	QA	QC	QD	QE	QF
ø32	22	17	19.5	Rc1/8	6.5	27	35	30	46	M10X1.25	92	4	12	5.5	10	4	13	21	12.5	6.5	22	16
ø40	30	22	27	Rc1/4	9	27	40	35	52	M14X1.5	97	4	16	6	14	4	14	27	12	6	22	16
ø50	35	27	32	Rc1/4	10.5	31.5	43.5	40	65	M18X1.5	106	5	20	8	17	4	15.5	27.5	16.5	8.5	40	30
ø63	35	27	32	Rc3/8	12	31.5	43.5	45	75	M18X1.5	106	9	20	8	17	4	16.5	28.5	11.5	3.5	40	30
ø80	40	32	37	Rc3/8	14	38	56	45	95	M22X1.5	132	11.5	25	11	22	4	19	38	10	2	40	30
ø100	40	41	37	Rc1/2	15	38	56	55	114	M26X1.5	132	17	30	13	27	4	19	37	11	3	40	30

Code / Bore size (mm)							Mounting dimensions									With switch					
	QG	R	RA	T	V	WF	LA	LB	LC	LD	LG	LH	LR	LS	LT	O	P	T0, T5 ,T2, T3		T2W, T3W	
																		RD	HD	RD	HD
ø32	17.5	19	27	6	13	25	170	9	22	7	136	30	32	50	3.2	59	38	5	5	7.5	7.5
ø40	18.5	19	32	8	13	21	183	11	24	9	145	33	38	55	3.2	66	41	5	5	7.5	7.5
ø50	23.8	23.5	35.5	11	14	23	202	11	27	9	160	40	46	70	3.2	72	43	6.5	5	9	7
ø63	23.8	21.5	33.5	11	14	23	205	14	27	12	160	45	56	80	4.5	83	48	6.5	5	9	7
ø80	27.5	28	47	13	20	32	248	14	30	12	192	55	72	95	4.5	104	57	12.5	6	15	8
ø100	27.5	28	46	16	20	32	252	16	32	14	196	65	89	114	6	121	63	12	6.5	14.5	8.5

Dimensions

● Axial foot (LB) with rod side position locking

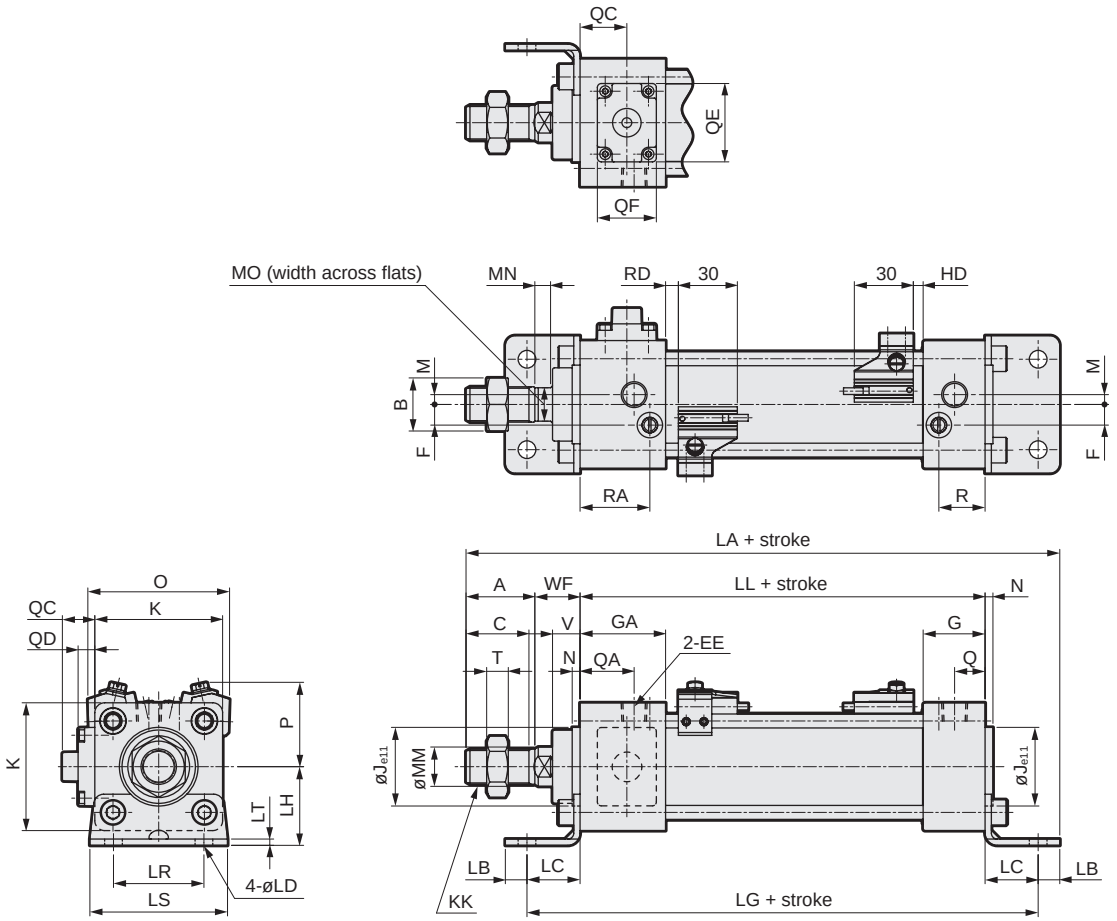

*1: Refer to page 436 for HD, RD and protruding dimensions of other switches.
*2: For the dimensions of the accessories, refer to pages 372 and 373.

Code / Bore size (mm)	Axial foot (LB) with rod side position locking basic dimensions																					
	A	B	C	EE	F	G	GA	J	K	KK	LL	M	MM	MN	MO	N	Q	QA	QC	QD	QE	QF
ø32	22	17	19.5	Rc1/8	6.5	27	35	30	46	M10X1.25	92	4	12	5.5	10	4	13	21	12.5	6.5	22	16
ø40	30	22	27	Rc1/4	9	27	40	35	52	M14X1.5	97	4	16	6	14	4	14	27	12	6	22	16
ø50	35	27	32	Rc1/4	10.5	31.5	43.5	40	65	M18X1.5	106	5	20	8	17	4	15.5	27.5	16.5	8.5	40	30
ø63	35	27	32	Rc3/8	12	31.5	43.5	45	75	M18X1.5	106	9	20	8	17	4	16.5	28.5	11.5	3.5	40	30
ø80	40	32	37	Rc3/8	14	38	56	45	95	M22X1.5	132	11.5	25	11	22	4	19	37	10	2	40	30
ø100	40	41	37	Rc1/2	15	38	56	55	114	M26X1.5	132	17	30	13	27	4	19	37	11	3	40	30

Code / Bore size (mm)							Mounting dimensions									With switch					
	QG	R	RA	T	V	WF	LA	LB	LC	LD	LG	LH	LR	LS	LT	O	P	T0, T5 ,T2, T3		T2W, T3W	
																		RD	HD	RD	HD
ø32	17.5	19	27	6	13	25	170	9	22	7	136	30	32	50	3.2	59	38	5	5	7.5	7.5
ø40	18.5	19	32	8	13	21	183	11	24	9	145	33	38	55	3.2	66	41	5	5	7.5	7.5
ø50	23.8	23.5	35.5	11	14	23	202	11	27	9	160	40	46	70	3.2	72	43	6.5	5	9	7
ø63	23.8	21.5	33.5	11	14	23	205	14	27	12	160	45	56	80	4.5	83	48	6.5	5	9	7
ø80	27.5	28	46	13	20	32	248	14	30	12	192	55	72	95	4.5	104	57	12.5	6	15	8
ø100	31.5	28	46	16	20	32	252	16	32	14	196	65	89	114	6	121	63	12	6.5	14.5	8.5

SCP*3
CMK2
CMA2
SCM
SCG
SCA2
SCS2
CKV2
CAV2/ COVP/N2
SSD2
SSG
SSD
CAT
MDC2
MVC
SMG
MSD/ MSDG
FC*
STK
SRL3
SRG3
SRM3
SRT3
MRL2
MRG2
SM-25
ShkAbs
FJ
FK
Spd Contr
Ending

Dimensions

● Rod side flange (FA) with head side position locking

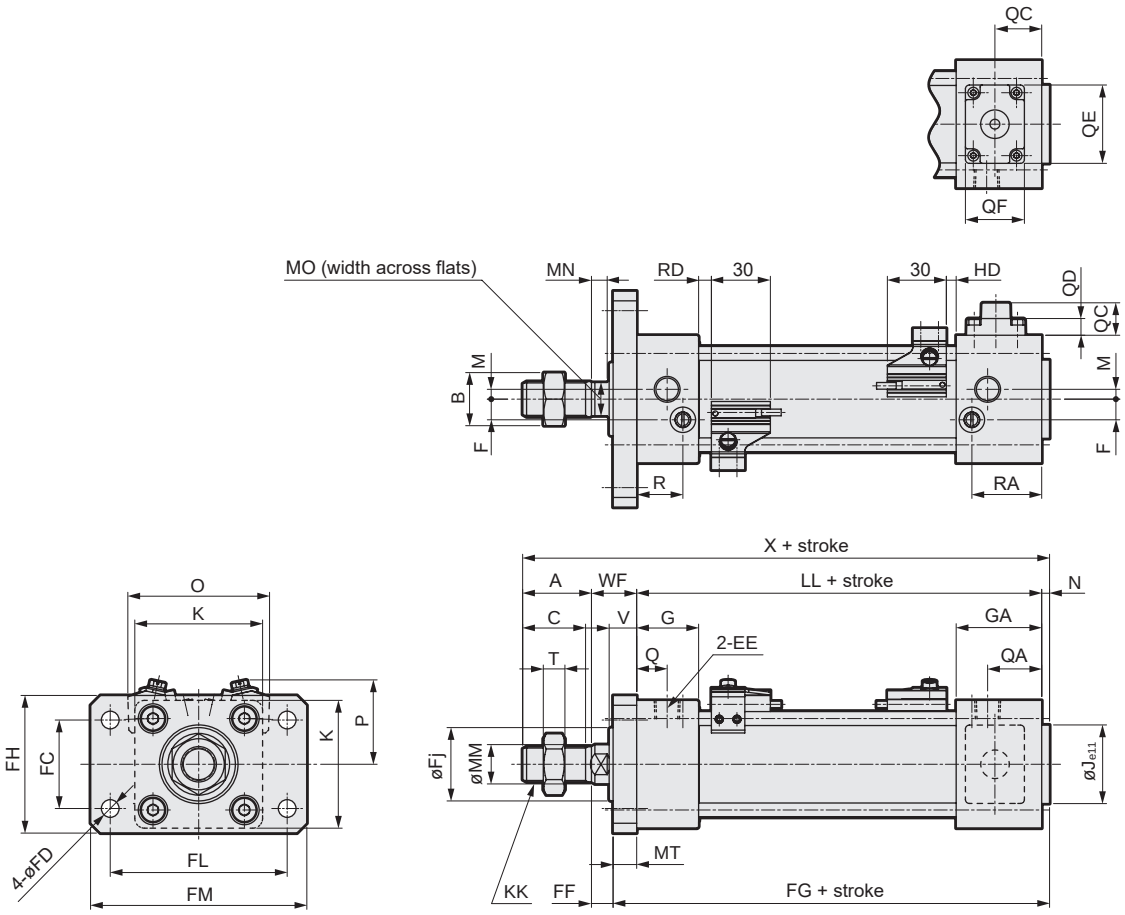

*1: Refer to page 436 for HD, RD and protruding dimensions of other switches.
*2: For the dimensions of the accessories, refer to pages 372 and 373.

Code / Bore size (mm)	Rod side flange (FA) with head side position locking basic dimensions																					
	A	B	C	EE	F	G	GA	J	K	KK	LL	M	MM	MN	MO	N	Q	QA	QC	QD	QE	QF
ø32	22	17	19.5	Rc1/8	6.5	27	35	30	46	M10X1.25	92	4	12	5.5	10	4	13	21	12.5	6.5	22	16
ø40	30	22	27	Rc1/4	9	27	40	35	52	M14X1.5	97	4	16	6	14	4	14	27	12	6	22	16
ø50	35	27	32	Rc1/4	10.5	31.5	43.5	40	65	M18X1.5	106	5	20	8	17	4	15.5	27.5	16.5	8.5	40	30
ø63	35	27	32	Rc3/8	12	31.5	43.5	45	75	M18X1.5	106	9	20	8	17	4	16.5	28.5	11.5	3.5	40	30
ø80	40	32	37	Rc3/8	14	38	56	45	95	M22X1.5	132	11.5	25	11	22	4	19	38	10	2	40	30
ø100	40	41	37	Rc1/2	15	38	56	55	114	M26X1.5	132	17	30	13	27	4	19	37	11	3	40	30

Code / Bore size (mm)								Mounting dimensions									With switch					
	QG	R	RA	T	V	WF	X	FC	FD	FF	FG	Fj	MT	FH	FL	FM	O	P	T0, T5 ,T2, T3		T2W, T3W	
																			RD	HD	RD	HD
ø32	17.5	19	27	6	13	25	143	32	7	15	106	29	10	50	64	79	59	38	5	5	7.5	7.5
ø40	18.5	19	32	8	13	21	152	36	9	11	111	30	10	55	72	90	66	41	5	5	7.5	7.5
ø50	23.8	23.5	35.5	11	14	23	168	45	9	11	122	38	12	70	90	110	72	43	6.5	5	9	7
ø63	23.8	21.5	33.5	11	14	23	168	50	9	11	122	38	12	80	100	120	83	48	6.5	5	9	7
ø80	27.5	28	47	13	20	32	208	63	12	16	152	43	16	100	126	153	104	57	12.5	6	15	8
ø100	27.5	28	46	16	20	32	208	75	14	16	152	51	16	120	150	178	121	63	12	6.5	14.5	8.5

Dimensions

● Rod side flange (FA) with rod side position locking

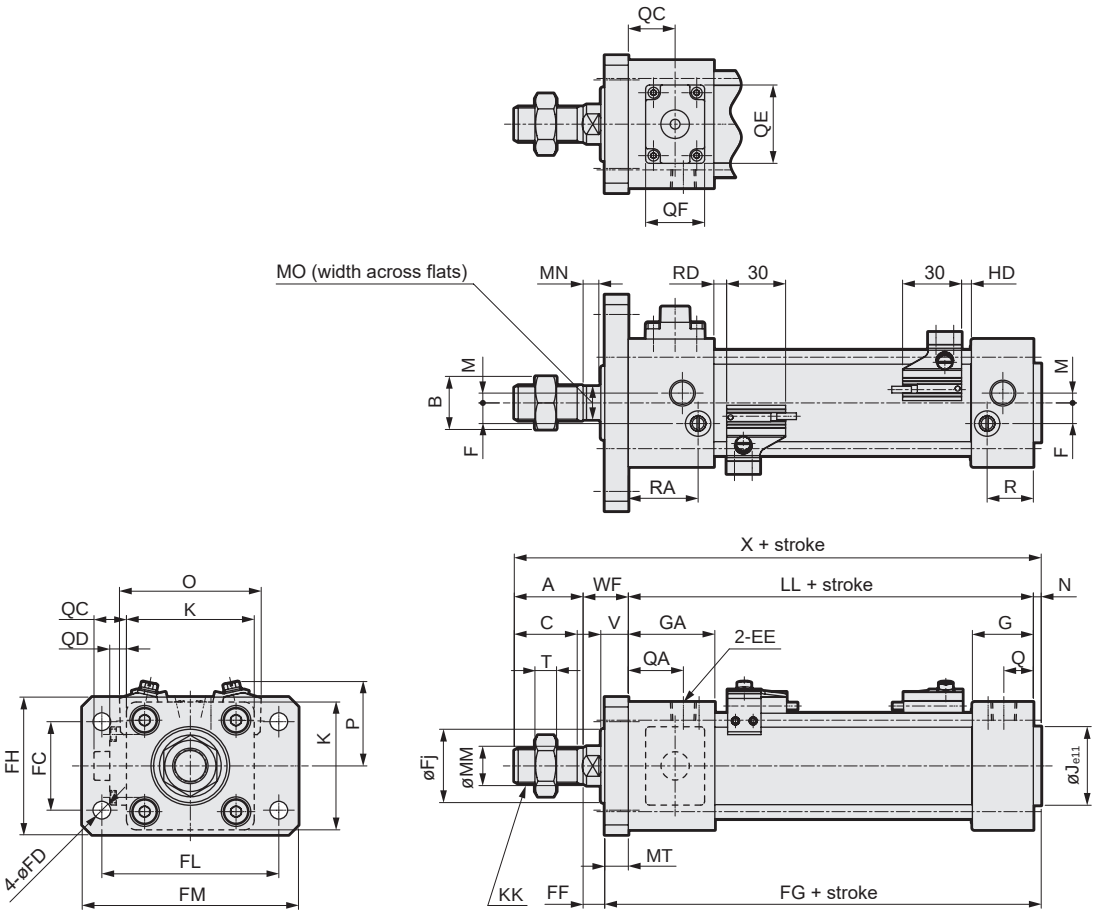

*1: Refer to page 436 for HD, RD and protruding dimensions of other switches.
*2: For the dimensions of the accessories, refer to pages 372 and 373.

Code / Bore size (mm)	Rod side flange (FA) with rod side position locking basic dimensions																					
	A	B	C	EE	F	G	GA	J	K	KK	LL	M	MM	MN	MO	N	Q	QA	QC	QD	QE	QF
ø32	22	17	19.5	Rc1/8	6.5	27	35	30	46	M10X1.25	92	4	12	5.5	10	4	13	21	12.5	6.5	22	16
ø40	30	22	27	Rc1/4	9	27	40	35	52	M14X1.5	97	4	16	6	14	4	14	27	12	6	22	16
ø50	35	27	32	Rc1/4	10.5	31.5	43.5	40	65	M18X1.5	106	5	20	8	17	4	15.5	27.5	16.5	8.5	40	30
ø63	35	27	32	Rc3/8	12	31.5	43.5	45	75	M18X1.5	106	9	20	8	17	4	16.5	28.5	11.5	3.5	40	30
ø80	40	32	37	Rc3/8	14	38	56	45	95	M22X1.5	132	11.5	25	11	22	4	19	37	10	2	40	30
ø100	40	41	37	Rc1/2	15	38	56	55	114	M26X1.5	132	17	30	13	27	4	19	37	11	3	40	30

Code / Bore size (mm)								Mounting dimensions									With switch					
	QG	R	RA	T	V	WF	X	FC	FD	FF	FG	Fj	MT	FH	FL	FM	O	P	T0, T5 ,T2, T3		T2W, T3W	
																			RD	HD	RD	HD
ø32	17.5	19	27	6	13	25	143	32	7	15	106	29	10	50	64	79	59	38	5	5	7.5	7.5
ø40	18.5	19	32	8	13	21	152	36	9	11	111	30	10	55	72	90	66	41	5	5	7.5	7.5
ø50	23.8	23.5	35.5	11	14	23	168	45	9	11	122	38	12	70	90	110	72	43	6.5	5	9	7
ø63	23.8	21.5	33.5	11	14	23	168	50	9	11	122	38	12	80	100	120	83	48	6.5	5	9	7
ø80	27.5	28	46	13	20	32	208	63	12	16	152	43	16	100	126	153	104	57	12.5	6	15	8
ø100	31.5	28	46	16	20	32	208	75	14	16	152	51	16	120	150	178	121	63	12	6.5	14.5	8.5

SCP*3
CMK2
CMA2
SCM
SCG
SCA2
SCS2
CKV2
CAV2/ COVP/N2
SSD2
SSG
SSD
CAT
MDC2
MVC
SMG
MSD/ MSDG
FC*
STK
SRL3
SRG3
SRM3
SRT3
MRL2
MRG2
SM-25
ShkAbs
FJ
FK
Spd Contr
Ending

Dimensions

● Head side flange (FB) with head side position locking

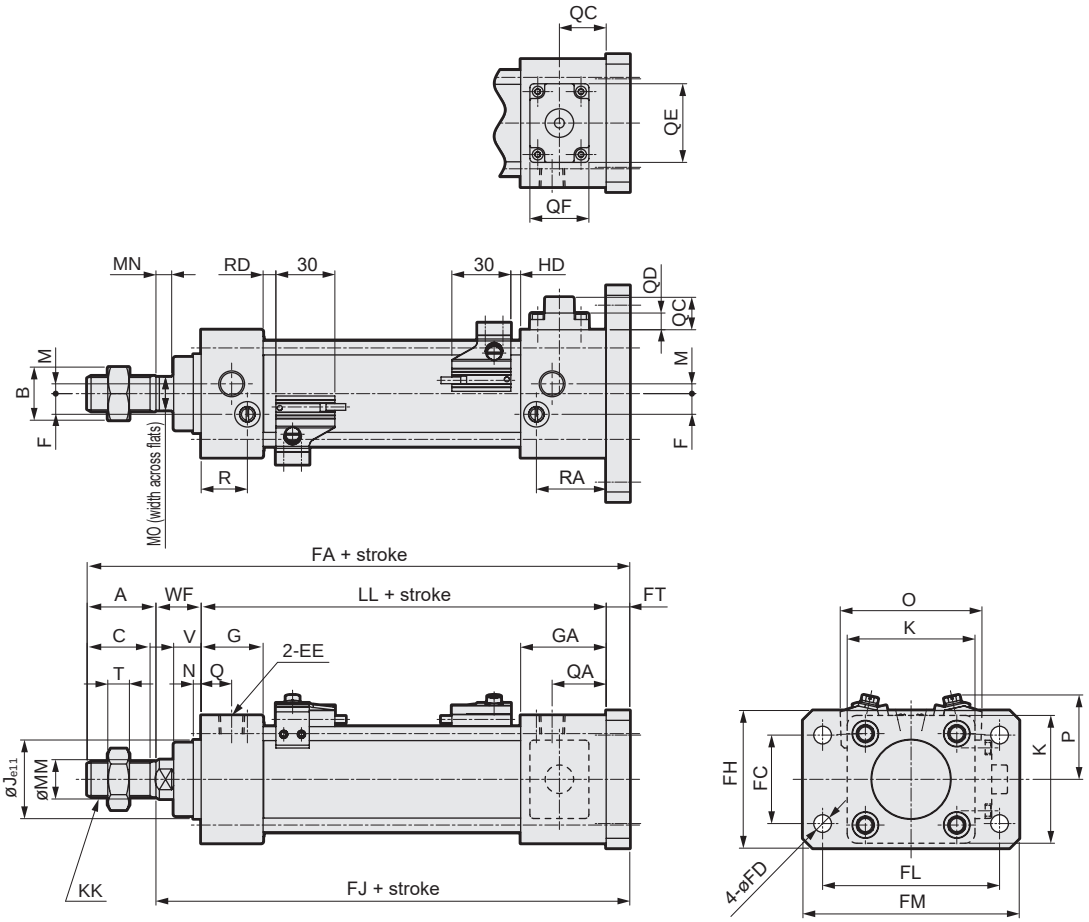

*1: Refer to page 436 for HD, RD and protruding dimensions of other switches.
*2: For the dimensions of the accessories, refer to pages 372 and 373.

Code / Bore size (mm)	Head side flange (FB) with head side position locking basic dimensions																			
	A	B	C	EE	F	G	GA	J	K	KK	LL	M	MM	MN	MO	N	Q	QA	QC	QD	QE
ø32	22	17	19.5	Rc1/8	6.5	27	35	30	46	M10X1.25	92	4	12	5.5	10	4	13	21	12.5	6.5	22
ø40	30	22	27	Rc1/4	9	27	40	35	52	M14X1.5	97	4	16	6	14	4	14	27	12	6	22
ø50	35	27	32	Rc1/4	10.5	31.5	43.5	40	65	M18X1.5	106	5	20	8	17	4	15.5	27.5	16.5	8.5	40
ø63	35	27	32	Rc3/8	12	31.5	43.5	45	75	M18X1.5	106	9	20	8	17	4	16.5	28.5	11.5	3.5	40
ø80	40	32	37	Rc3/8	14	38	56	45	95	M22X1.5	132	11.5	25	11	22	4	19	38	10	2	40
ø100	40	41	37	Rc1/2	15	38	56	55	114	M26X1.5	132	17	30	13	27	4	19	37	11	3	40

Code / Bore size (mm)								Mounting dimensions								With switch					
	QF	QG	R	RA	T	V	WF	FA	FC	FD	FH	FJ	FL	FM	FT	O	P	T0, T5 ,T2, T3		T2W, T3W	
																		RD	HD	RD	HD
ø32	16	17.5	19	27	6	13	25	149	32	7	50	127	64	79	10	59	38	5	5	7.5	7.5
ø40	16	18.5	19	32	8	13	21	158	36	9	55	128	72	90	10	66	41	5	5	7.5	7.5
ø50	30	23.8	23.5	35.5	11	14	23	176	45	9	70	141	90	110	12	72	43	6.5	5	9	7
ø63	30	23.8	21.5	33.5	11	14	23	176	50	9	80	141	100	120	12	83	48	6.5	5	9	7
ø80	30	27.5	28	47	13	20	32	220	63	12	100	180	126	153	16	104	57	12.5	6	15	8
ø100	30	27.5	28	46	16	20	32	220	75	14	120	180	150	178	16	121	63	12	6.5	14.5	8.5

Dimensions

● Head side flange (FB) with rod side position locking

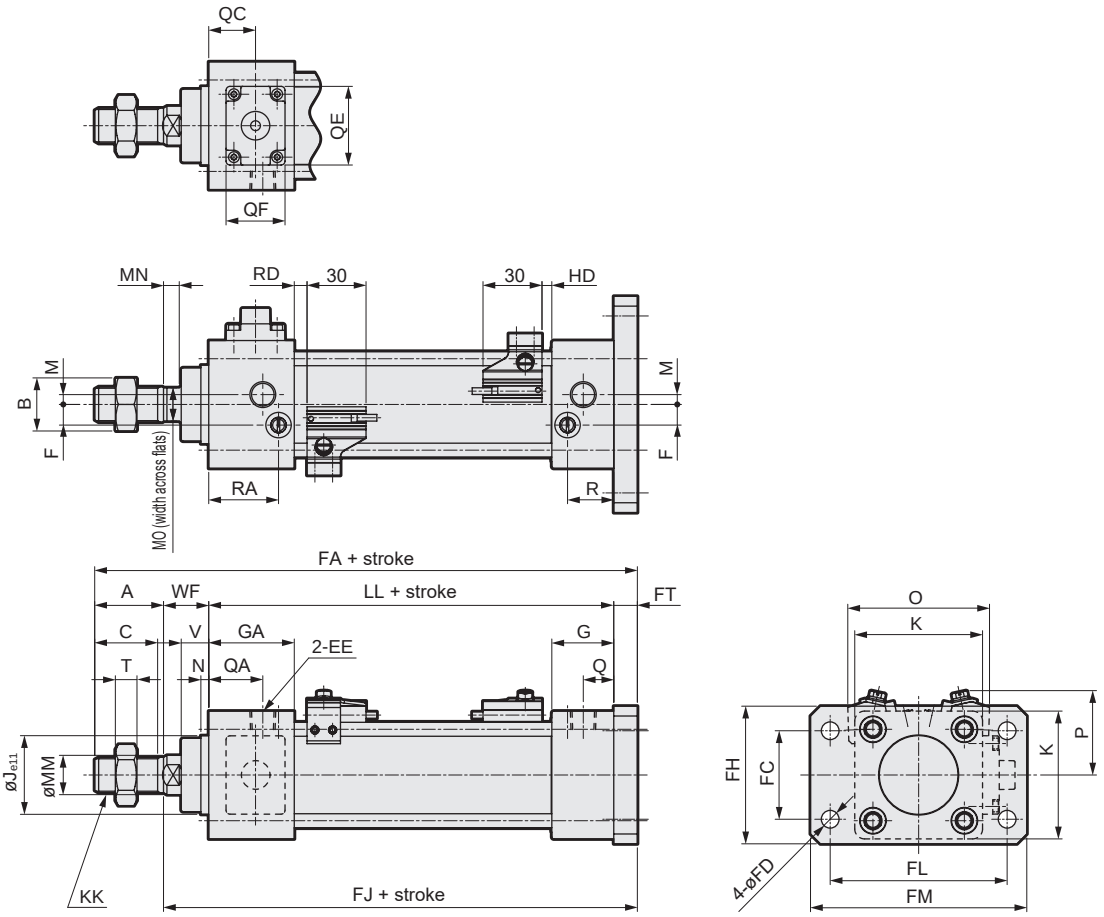

*1: Refer to page 436 for HD, RD and protruding dimensions of other switches.
*2: For the dimensions of the accessories, refer to pages 372 and 373.

Code / Bore size (mm)	Head side flange (FB) with rod side position locking basic dimensions																			
	A	B	C	EE	F	G	GA	J	K	KK	LL	M	MM	MN	MO	N	Q	QA	QC	QD	QE
ø32	22	17	19.5	Rc1/8	6.5	27	35	30	46	M10X1.25	92	4	12	5.5	10	4	13	21	12.5	6.5	22
ø40	30	22	27	Rc1/4	9	27	40	35	52	M14X1.5	97	4	16	6	14	4	14	27	12	6	22
ø50	35	27	32	Rc1/4	10.5	31.5	43.5	40	65	M18X1.5	106	5	20	8	17	4	15.5	27.5	16.5	8.5	40
ø63	35	27	32	Rc3/8	12	31.5	43.5	45	75	M18X1.5	106	9	20	8	17	4	16.5	28.5	11.5	3.5	40
ø80	40	32	37	Rc3/8	14	38	56	45	95	M22X1.5	132	11.5	25	11	22	4	19	37	10	2	40
ø100	40	41	37	Rc1/2	15	38	56	55	114	M26X1.5	132	17	30	13	27	4	19	37	11	3	40

Code / Bore size (mm)								Mounting dimensions								With switch					
	QF	QG	R	RA	T	V	WF	FA	FC	FD	FH	FJ	FL	FM	FT	O	P	T0, T5 ,T2, T3		T2W, T3W	
																		RD	HD	RD	HD
ø32	16	17.5	19	27	6	13	25	149	32	7	50	127	64	79	10	59	38	5	5	7.5	7.5
ø40	16	18.5	19	32	8	13	21	158	36	9	55	128	72	90	10	66	41	5	5	7.5	7.5
ø50	30	23.8	23.5	35.5	11	14	23	176	45	9	70	141	90	110	12	72	43	6.5	5	9	7
ø63	30	23.8	21.5	33.5	11	14	23	176	50	9	80	141	100	120	12	83	48	6.5	5	9	7
ø80	30	27.5	28	46	13	20	32	220	63	12	100	180	126	153	16	104	57	12.5	6	15	8
ø100	30	31.5	28	46	16	20	32	220	75	14	120	180	150	178	16	121	63	12	6.5	14.5	8.5

SCP*3
CMK2
CMA2
SCM
SCG
SCA2
SCS2
CKV2
CAV2/ COVP/N2
SSD2
SSG
SSD
CAT
MDC2
MVC
SMG
MSD/ MSDG
FC*
STK
SRL3
SRG3
SRM3
SRT3
MRL2
MRG2
SM-25
ShkAbs
FJ
FK
Spd Contr
Ending

Dimensions

CAD

● Eye bracket (CA) with head side position locking

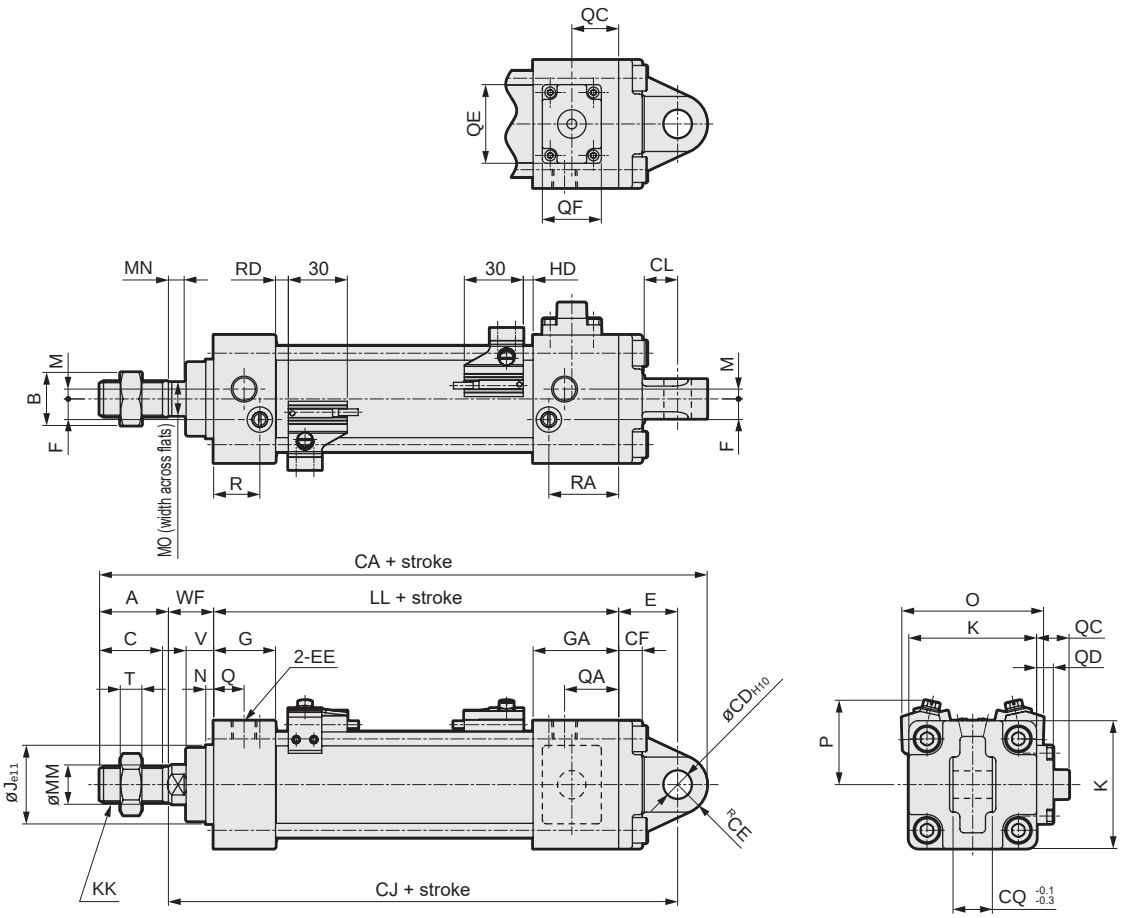

*1: Refer to page 436 for HD, RD and protruding dimensions of other switches.
*2: For the dimensions of the accessories, refer to pages 372 and 373.

Code	Eye bracket (CA) with head side position locking basic dimensions																				
Bore size (mm)	A	B	C	EE	F	G	GA	J	K	KK	LL	M	MM	MN	MO	N	Q	QA	QC	QD	QE
ø32	22	17	19.5	Rc1/8	6.5	27	35	30	46	M10X1.25	92	4	12	5.5	10	4	13	21	12.5	6.5	22
ø40	30	22	27	Rc1/4	9	27	40	35	52	M14X1.5	97	4	16	6	14	4	14	27	12	6	22
ø50	35	27	32	Rc1/4	10.5	31.5	43.5	40	65	M18X1.5	106	5	20	8	17	4	15.5	27.5	16.5	8.5	40
ø63	35	27	32	Rc3/8	12	31.5	43.5	45	75	M18X1.5	106	9	20	8	17	4	16.5	28.5	11.5	3.5	40
ø80	40	32	37	Rc3/8	14	38	56	45	95	M22X1.5	132	11.5	25	11	22	4	19	38	10	2	40
ø100	40	41	37	Rc1/2	15	38	56	55	114	M26X1.5	132	17	30	13	27	4	19	37	11	3	40

Code								Mounting dimensions								With switch					
Bore size (mm)	QF	QG	R	RA	T	V	WF	FA	FC	FD	FH	FJ	FL	FM	FT	O	P	T0, T5 ,T2, T3		T2W, T3W	
																		RD	HD	RD	HD
ø32	16	17.5	19	27	6	13	25	172.5	10	10.5	9	13	140	14	23	59	38	5	5	7.5	7.5
ø40	16	18.5	19	32	8	13	21	182	10	11	9	13	141	14	23	66	41	5	5	7.5	7.5
ø50	30	23.8	23.5	35.5	11	14	23	209	14	15	12	17	159	20	30	72	43	6.5	5	9	7
ø63	30	23.8	21.5	33.5	11	14	23	209	14	15	12	17	159	20	30	83	48	6.5	5	9	7
ø80	30	27.5	28	47	13	20	32	269	22	23	15	26	206	30	42	104	57	12.5	6	15	8
ø100	30	27.5	28	46	16	20	32	269	22	23	15	26	206	30	42	121	63	12	6.5	14.5	8.5

Dimensions

● Eye bracket (CA) with rod side position locking

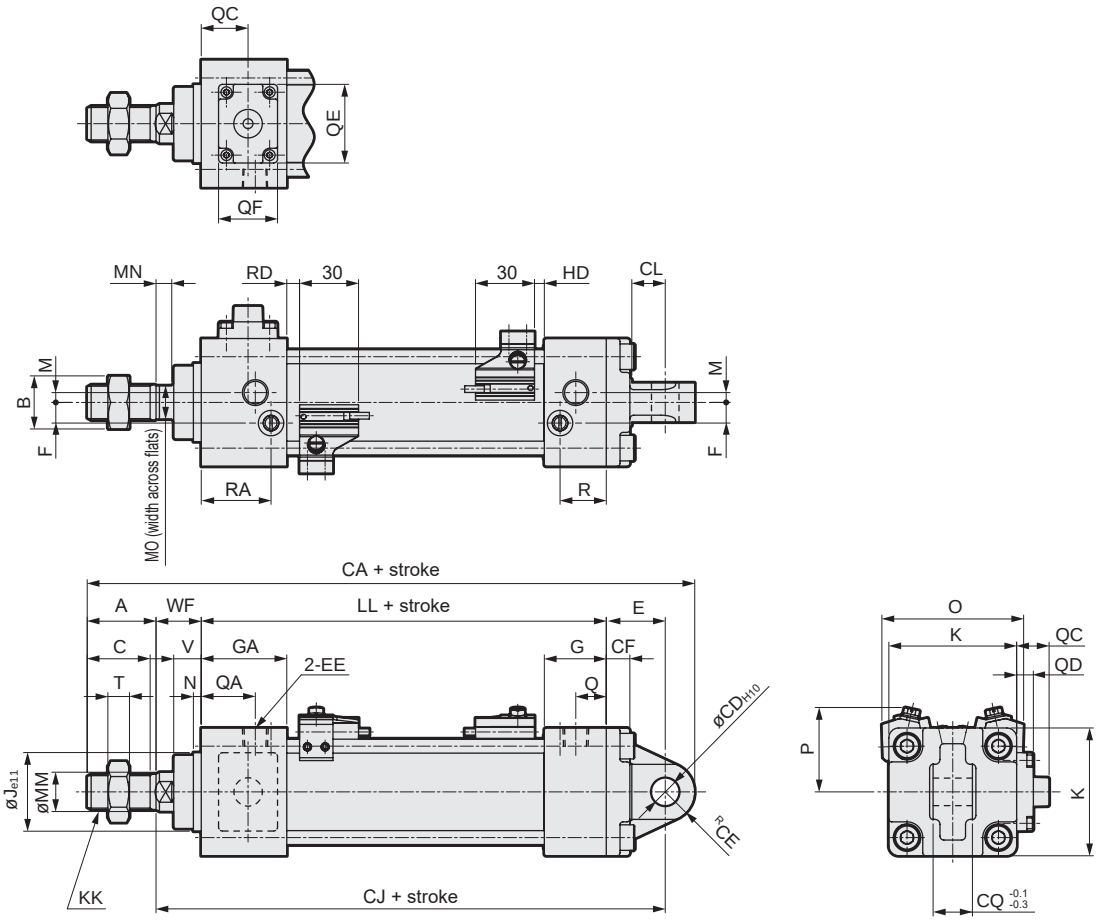

*1: Refer to page 436 for HD, RD and protruding dimensions of other switches.
*2: For the dimensions of the accessories, refer to pages 372 and 373.

Code	Eye bracket (CA) with rod side position locking basic dimensions																				
Bore size (mm)	A	B	C	EE	F	G	GA	J	K	KK	LL	M	MM	MN	MO	N	Q	QA	QC	QD	QE
ø32	22	17	19.5	Rc1/8	6.5	27	35	30	46	M10X1.25	92	4	12	5.5	10	4	13	21	12.5	6.5	22
ø40	30	22	27	Rc1/4	9	27	40	35	52	M14X1.5	97	4	16	6	14	4	14	27	12	6	22
ø50	35	27	32	Rc1/4	10.5	31.5	43.5	40	65	M18X1.5	106	5	20	8	17	4	15.5	27.5	16.5	8.5	40
ø63	35	27	32	Rc3/8	12	31.5	43.5	45	75	M18X1.5	106	9	20	8	17	4	16.5	28.5	11.5	3.5	40
ø80	40	32	37	Rc3/8	14	38	56	45	95	M22X1.5	132	11.5	25	11	22	4	19	37	10	2	40
ø100	40	41	37	Rc1/2	15	38	56	55	114	M26X1.5	132	17	30	13	27	4	19	37	11	3	40

Code								Mounting dimensions								With switch					
Bore size (mm)	QF	QG	R	RA	T	V	WF	CA	CD	CE	CF	CI	CJ	CQ	E	O	P	T0, T5 ,T2, T3 RD	T0, T5 ,T2, T3 HD	T2W, T3W RD	T2W, T3W HD
ø32	16	17.5	19	27	6	13	25	172.5	10	10.5	9	13	140	14	23	59	38	5	5	7.5	7.5
ø40	16	18.5	19	32	8	13	21	182	10	11	9	13	141	14	23	66	41	5	5	7.5	7.5
ø50	30	23.8	23.5	35.5	11	14	23	209	14	15	12	17	159	20	30	72	43	6.5	5	9	7
ø63	30	23.8	21.5	33.5	11	14	23	209	14	15	12	17	159	20	30	83	48	6.5	5	9	7
ø80	30	27.5	28	46	13	20	32	269	22	23	15	26	206	30	42	104	57	12.5	6	15	8
ø100	30	31.5	28	46	16	20	32	269	22	23	15	26	206	30	42	121	63	12	6.5	14.5	8.5

SCP*3
CMK2
CMA2
SCM
SCG
SCA2
SCS2
CKV2
CAV2/ COVP/N2
SSD2
SSG
SSD
CAT
MDC2
MVC
SMG
MSD/ MSDG
FC*
STK
SRL3
SRG3
SRM3
SRT3
MRL2
MRG2
SM-25
ShkAbs
FJ
FK
Spd Contr
Ending

Dimensions

● Clevis bracket (CB) with head side position locking

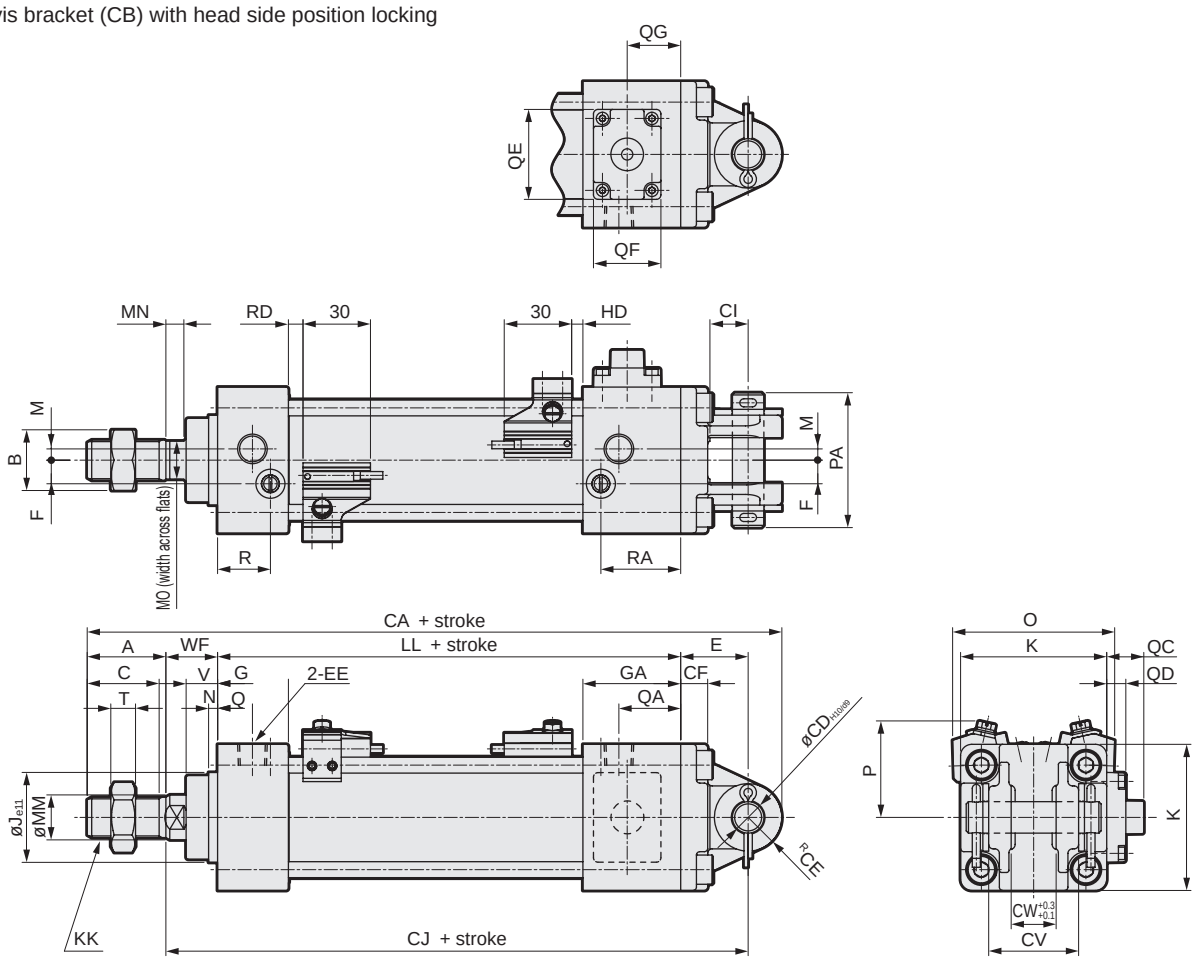

*1: Refer to page 436 for HD, RD and protruding dimensions of other switches.
*2: For the dimensions of the accessories, refer to pages 372 and 373.

Code / Bore size (mm)	Clevis bracket (CB) with head side position locking basic dimensions																			
	A	B	C	EE	F	G	GA	J	K	KK	LL	M	MM	MN	MO	N	Q	QA	QC	QD	QE
ø32	22	17	19.5	Rc1/8	6.5	27	35	30	46	M10X1.25	92	4	12	5.5	10	4	13	21	12.5	6.5	22
ø40	30	22	27	Rc1/4	9	27	40	35	52	M14X1.5	97	4	16	6	14	4	14	27	12	6	22
ø50	35	27	32	Rc1/4	10.5	31.5	43.5	40	65	M18X1.5	106	5	20	8	17	4	15.5	27.5	16.5	8.5	40
ø63	35	27	32	Rc3/8	12	31.5	43.5	45	75	M18X1.5	106	9	20	8	17	4	16.5	28.5	11.5	3.5	40
ø80	40	32	37	Rc3/8	14	38	56	45	95	M22X1.5	132	11.5	25	11	22	4	19	38	10	2	40
ø100	40	41	37	Rc1/2	15	38	56	55	114	M26X1.5	132	17	30	13	27	4	19	37	11	3	40

Code / Bore size (mm)								Mounting dimensions										With switch					
	QF	QG	R	RA	T	V	WF	CA	CD	CE	CF	CI	CJ	CV	CW	E	PA	O	P	T0, T5 ,T2, T3		T2W, T3W	
																				RD	HD	RD	HD
ø32	16	17.5	19	27	6	13	25	172.5	10	10.5	9	13	140	28	14	23	44	59	38	5	5	7.5	7.5
ø40	16	18.5	19	32	8	13	21	182	10	11	9	13	141	28	14	23	44	66	41	5	5	7.5	7.5
ø50	30	23.8	23.5	35.5	11	14	23	209	14	15	12	17	159	40	20	30	60	72	43	6.5	5	9	7
ø63	30	23.8	21.5	33.5	11	14	23	209	14	15	12	17	159	40	20	30	60	83	48	6.5	5	9	7
ø80	30	27.5	28	47	13	20	32	269	22	23	15	26	206	60	30	42	82	104	57	12.5	6	15	8
ø100	30	27.5	28	46	16	20	32	269	22	23	15	26	206	60	30	42	82	121	63	12	6.5	14.5	8.5

Dimensions

● Clevis bracket (CB) with rod side position locking

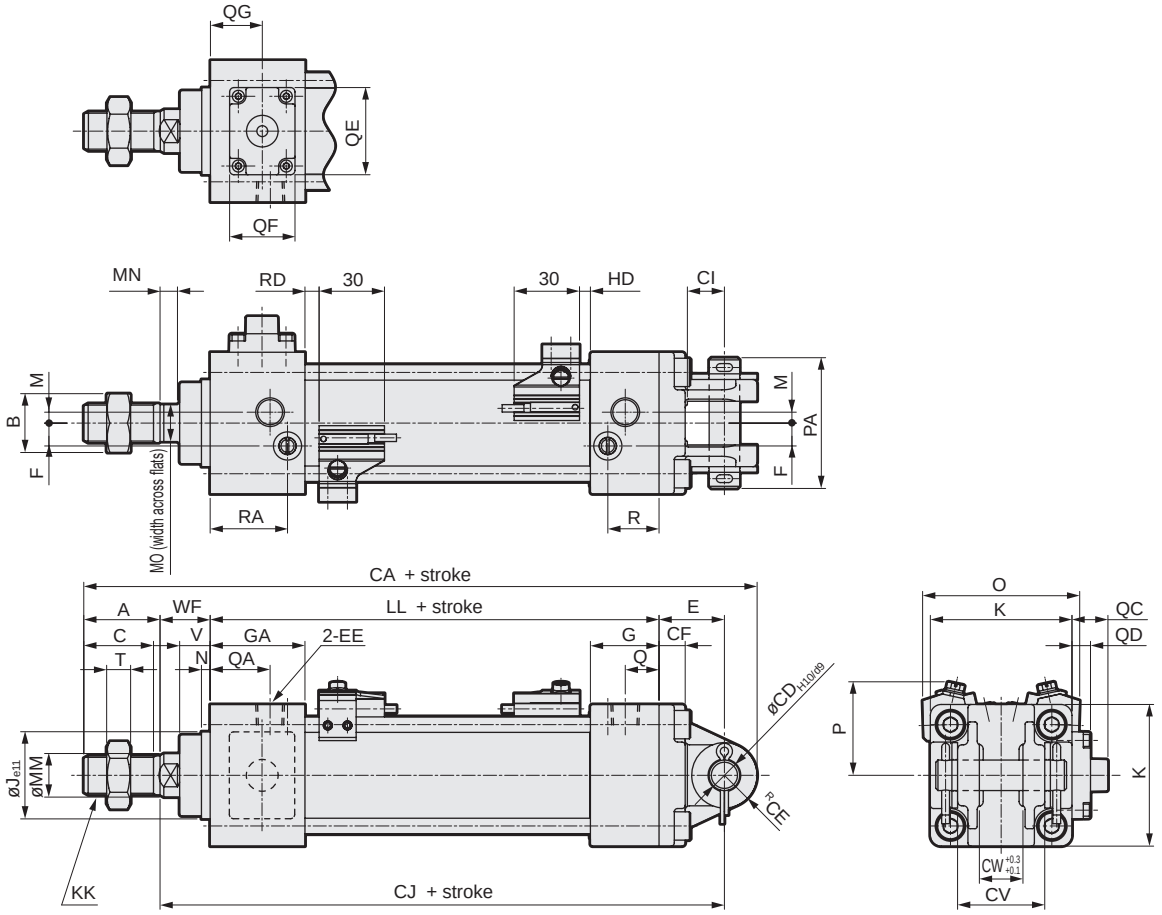

*1: Refer to page 436 for HD, RD and protruding dimensions of other switches.
*2: For the dimensions of the accessories, refer to pages 372 and 373.

Code / Bore size (mm)	Clevis bracket (CB) with rod side position locking basic dimensions																			
	A	B	C	EE	F	G	GA	J	K	KK	LL	M	MM	MN	MO	N	Q	QA	QC	QD	QE
ø32	22	17	19.5	Rc1/8	6.5	27	35	30	46	M10X1.25	92	4	12	5.5	10	4	13	21	12.5	6.5	22
ø40	30	22	27	Rc1/4	9	27	40	35	52	M14X1.5	97	4	16	6	14	4	14	27	12	6	22
ø50	35	27	32	Rc1/4	10.5	31.5	43.5	40	65	M18X1.5	106	5	20	8	17	4	15.5	27.5	16.5	8.5	40
ø63	35	27	32	Rc3/8	12	31.5	43.5	45	75	M18X1.5	106	9	20	8	17	4	16.5	28.5	11.5	3.5	40
ø80	40	32	37	Rc3/8	14	38	56	45	95	M22X1.5	132	11.5	25	11	22	4	19	37	10	2	40
ø100	40	41	37	Rc1/2	15	38	56	55	114	M26X1.5	132	17	30	13	27	4	19	37	11	3	40

Code / Bore size (mm)								Mounting dimensions										With switch					
	QF	QG	R	RA	T	V	WF	CA	CD	CE	CF	CI	CJ	CV	CW	E	PA	O	P	T0, T5 ,T2, T3		T2W, T3W	
																				RD	HD	RD	HD
ø32	16	17.5	19	27	6	13	25	172.5	10	10.5	9	13	140	28	14	23	44	59	38	5	5	7.5	7.5
ø40	16	18.5	19	32	8	13	21	182	10	11	9	13	141	28	14	23	44	66	41	5	5	7.5	7.5
ø50	30	23.8	23.5	35.5	11	14	23	209	14	15	12	17	159	40	20	30	60	72	43	6.5	5	9	7
ø63	30	23.8	21.5	33.5	11	14	23	209	14	15	12	17	159	40	20	30	60	83	48	6.5	5	9	7
ø80	30	27.5	28	46	13	20	32	269	22	23	15	26	206	60	30	42	82	104	57	12.5	6	15	8
ø100	30	31.5	28	46	16	20	32	269	22	23	15	26	206	60	30	42	82	121	63	12	6.5	14.5	8.5

SCP*3
CMK2
CMA2
SCM
SCG
SCA2
SCS2
CKV2
CAV2/ COVP/N2
SSD2
SSG
SSD
CAT
MDC2
MVC
SMG
MSD/ MSDG
FC*
STK
SRL3
SRG3
SRM3
SRT3
MRL2
MRG2
SM-25
ShkAbs
FJ
FK
Spd Contr
Ending

Dimensions

● Rod side trunnion (TA) with head side position locking

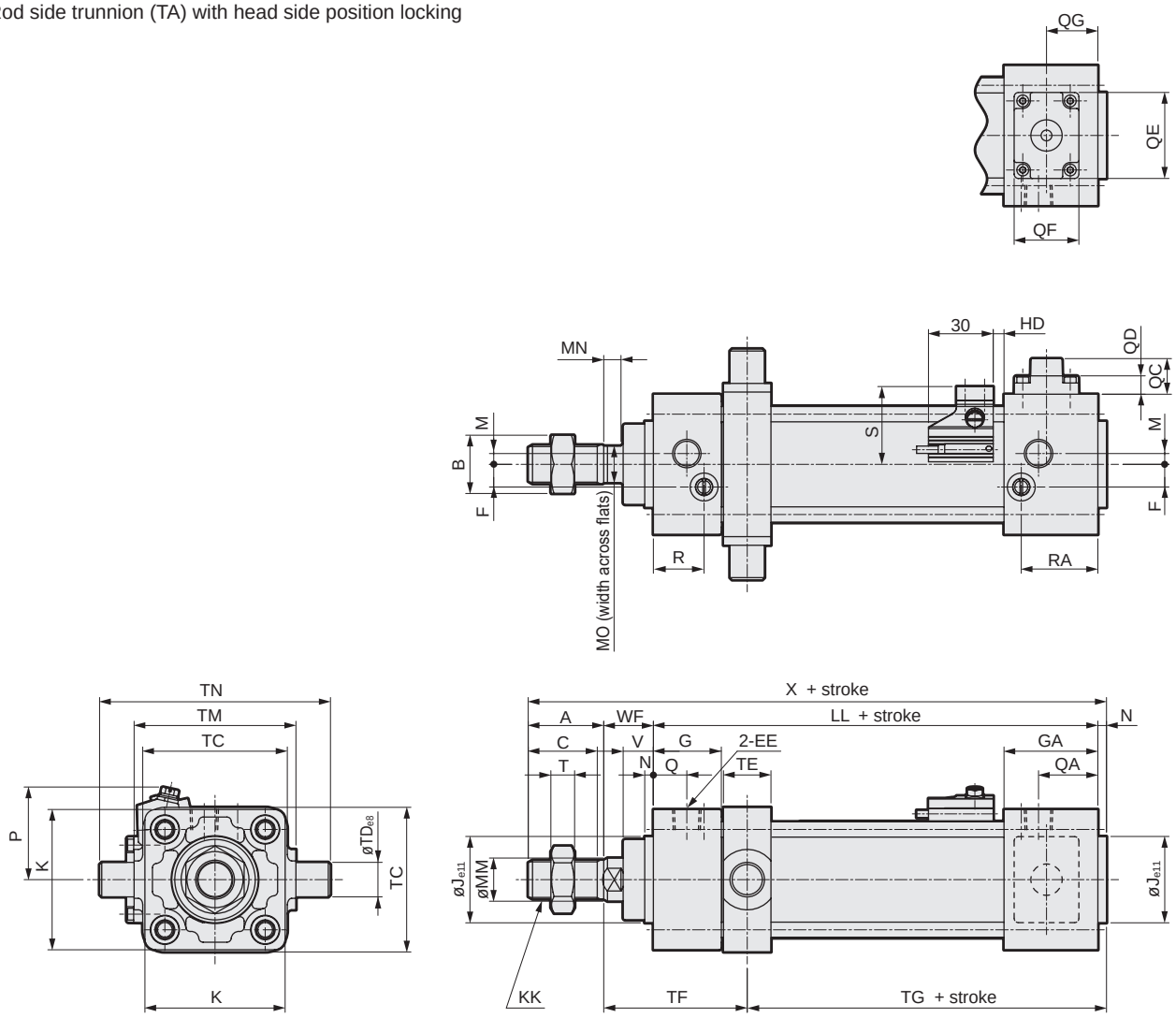

*1: A switch cannot be installed on the rod side.
*2: Refer to page 436 for HD and protruding dimensions of other switches.
*3: For the dimensions of the accessories, refer to pages 372 and 373.

Code / Bore size (mm)	Rod side trunnion (TA) with head side position locking basic dimensions																			
	A	B	C	EE	F	G	GA	J	K	KK	LL	M	MM	MN	MO	N	Q	QA	QC	QD
ø32	22	17	19.5	Rc1/8	6.5	27	35	30	46	M10X1.25	92	4	12	5.5	10	4	13	21	12.5	6.5
ø40	30	22	27	Rc1/4	9	27	40	35	52	M14X1.5	97	4	16	6	14	4	14	27	12	6
ø50	35	27	32	Rc1/4	10.5	31.5	43.5	40	65	M18X1.5	106	5	20	8	17	4	15.5	27.5	16.5	8.5
ø63	35	27	32	Rc3/8	12	31.5	43.5	45	75	M18X1.5	106	9	20	8	17	4	16.5	28.5	11.5	3.5
ø80	40	32	37	Rc3/8	14	38	56	45	95	M22X1.5	132	11.5	25	11	22	4	19	38	10	2
ø100	40	41	37	Rc1/2	15	38	56	55	114	M26X1.5	132	17	30	13	27	4	19	37	11	3

Code / Bore size (mm)										Mounting dimensions							With switch			
	QE	QF	QG	R	RA	T	V	WF	X	TC	TD	TE	TF	TG	TM	TN	S	P	T0, T5 ,T2, T3 HD	T2W, T3W HD
ø32	22	16	17.5	19	27	6	13	25	143	47	12	17	61.5	59.5	50	74	29.5	38	5	7.5
ø40	22	16	18.5	19	32	8	13	21	152	57	16	22	60	62	63	95	33	41	5	7.5
ø50	40	30	23.8	23.5	35.5	11	14	23	168	67	16	22	66.5	66.5	75	107	36	43	5	7
ø63	40	30	23.8	21.5	33.5	11	14	23	168	82	20	28	69.5	63.5	90	130	41.5	48	5	7
ø80	40	30	27.5	28	47	13	20	32	208	100	20	34	88	80	110	150	52	57	6	8
ø100	40	30	31.5	28	46	16	20	32	208	121	25	40	91	77	132	182	60.5	63	6.5	8.5

Dimensions

● Head side trunnion (TB) with rod side position locking

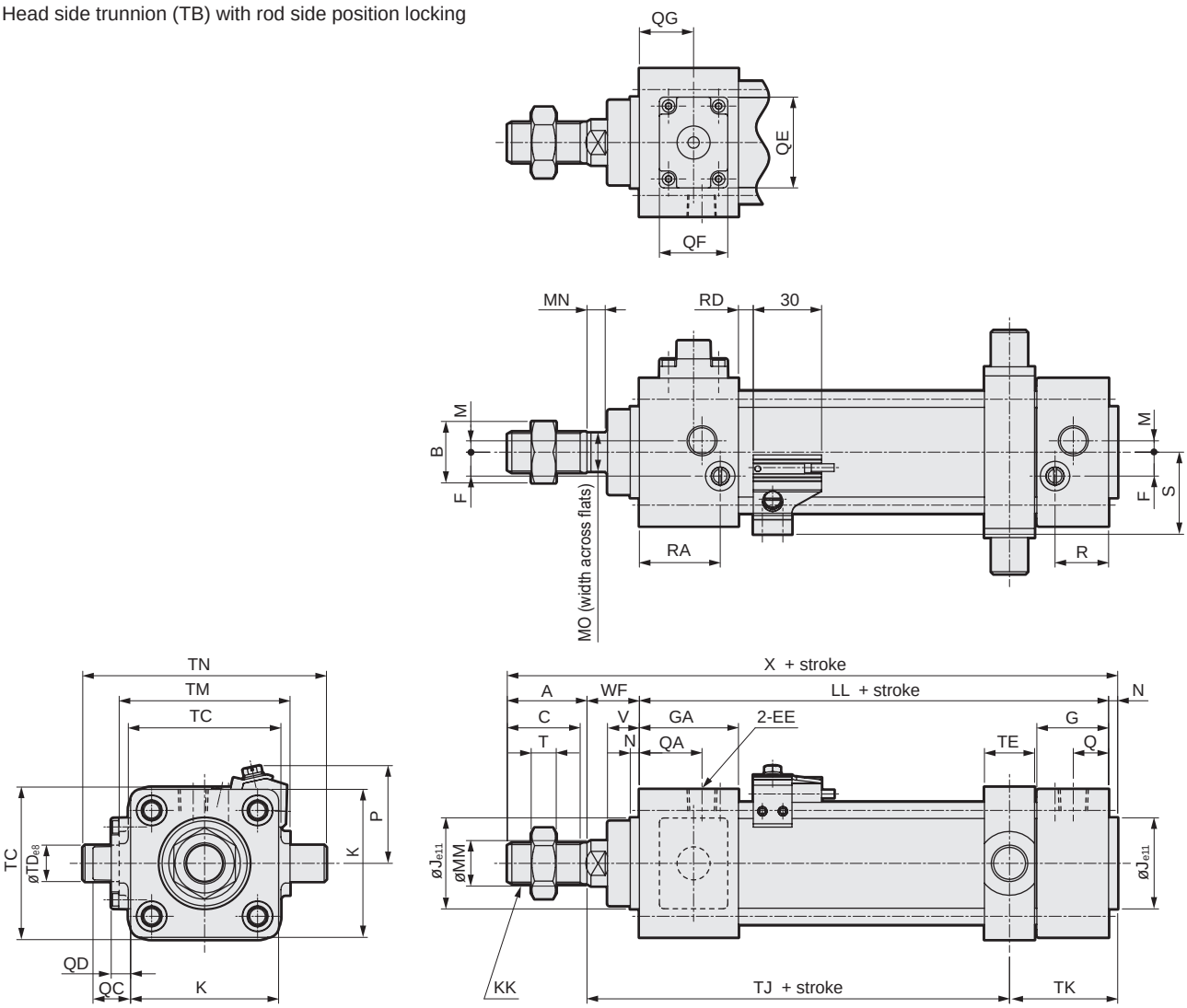

*1: A switch cannot be installed on the head side.
*2: Refer to page 436 for RD and protruding dimensions of other switches.
*3: For the dimensions of the accessories, refer to pages 372 and 373.

Code / Bore size (mm)	Head side trunnion (TB) with rod side position locking basic dimensions																		
	A	B	C	EE	F	G	GA	J	K	KK	LL	M	MM	MN	MO	N	Q	QA	QC	QD
ø32	22	17	19.5	Rc1/8	6.5	27	35	30	46	M10X1.25	92	4	12	5.5	10	4	13	21	12.5	6.5
ø40	30	22	27	Rc1/4	9	27	40	35	52	M14X1.5	97	4	16	6	14	4	14	27	12	6
ø50	35	27	32	Rc1/4	10.5	31.5	43.5	40	65	M18X1.5	106	5	20	8	17	4	15.5	27.5	16.5	8.5
ø63	35	27	32	Rc3/8	12	31.5	43.5	45	75	M18X1.5	106	9	20	8	17	4	16.5	28.5	11.5	3.5
ø80	40	32	37	Rc3/8	14	38	56	45	95	M22X1.5	132	11.5	25	11	22	4	19	37	10	2
ø100	40	41	37	Rc1/2	15	38	56	55	114	M26X1.5	132	17	30	13	27	4	19	37	11	3

Code / Bore size (mm)										Mounting dimensions							With switch			
	QE	QF	QG	R	RA	T	V	WF	X	TC	TD	TE	TJ	TK	TM	TN	S	P	T0, T5 ,T2, T3 RD	T2W, T3W RD
ø32	22	16	17.5	19	27	6	13	25	143	47	12	17	80.5	40.5	50	74	29.5	38	5	7.5
ø40	22	16	18.5	19	32	8	13	21	152	57	16	22	79	43	63	95	33	41	5	7.5
ø50	40	30	23.8	23.5	35.5	11	14	23	168	67	16	22	85.5	47.5	75	107	36	43	6.5	9
ø63	40	30	23.8	21.5	33.5	11	14	23	168	82	20	28	82.5	50.5	90	130	41.5	48	6.5	9
ø80	40	30	27.5	28	46	13	20	32	208	100	20	34	108	60	110	150	52	57	12.5	15
ø100	40	30	31.5	28	46	16	20	32	208	121	25	40	105	63	132	182	60.5	63	12	14.5

Dimensions

● Intermediate trunnion (TC) with head side position locking

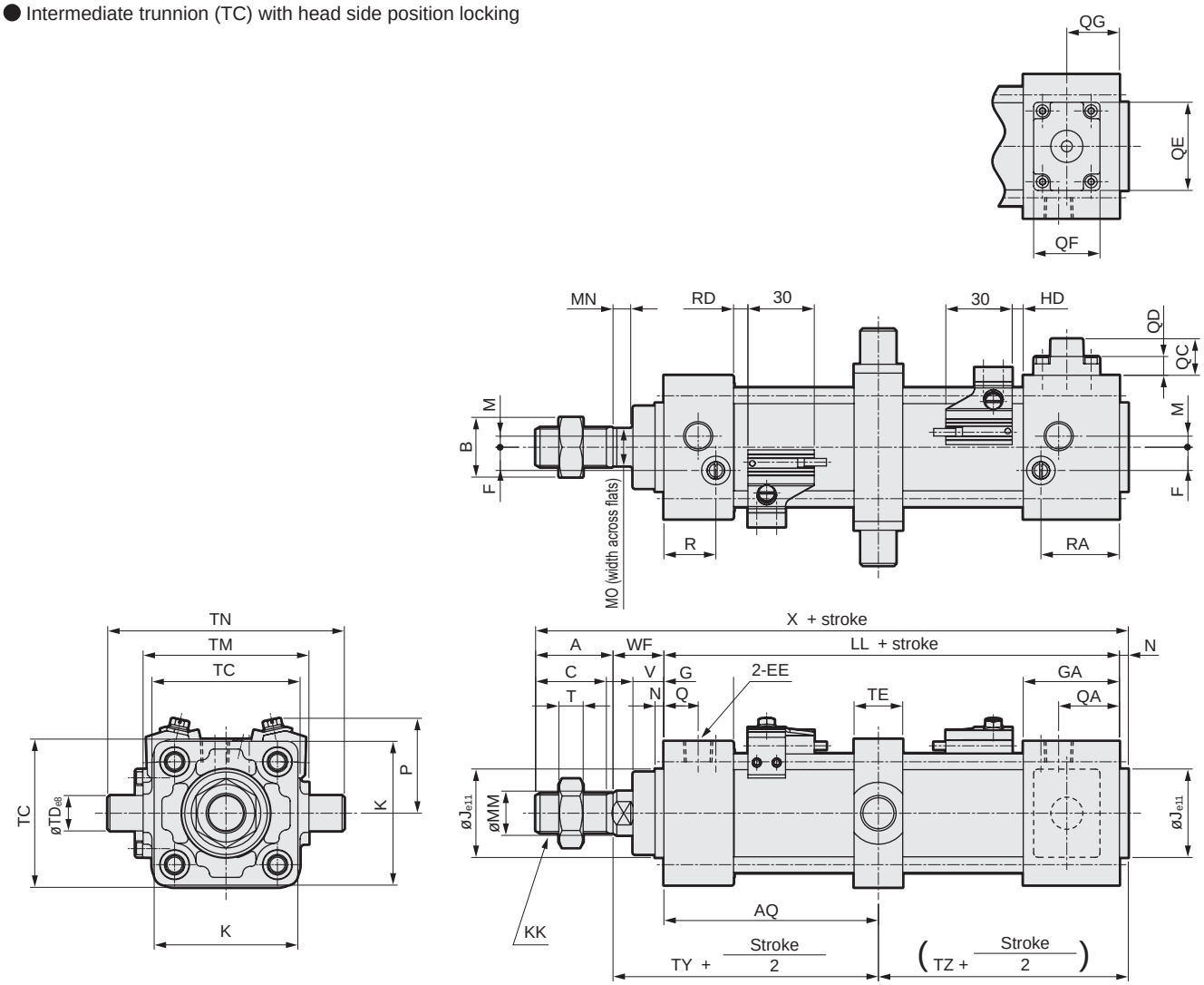

*1: Refer to page 436 for HD, RD and protruding dimensions of other switches.
*2: For the dimensions of the accessories, refer to pages 372 and 373.

Code / Bore size (mm)	Intermediate trunnion (TC) with head side position locking basic dimensions																			
	A	B	C	EE	F	G	GA	J	K	KK	LL	M	MM	MN	MO	N	Q	QA	QC	QD	QE
ø32	22	17	19.5	Rc1/8	6.5	27	35	30	46	M10X1.25	92	4	12	5.5	10	4	13	21	12.5	6.5	22
ø40	30	22	27	Rc1/4	9	27	40	35	52	M14X1.5	97	4	16	6	14	4	14	27	12	6	22
ø50	35	27	32	Rc1/4	10.5	31.5	43.5	40	65	M18X1.5	106	5	20	8	17	4	15.5	27.5	16.5	8.5	40
ø63	35	27	32	Rc3/8	12	31.5	43.5	45	75	M18X1.5	106	9	20	8	17	4	16.5	28.5	11.5	3.5	40
ø80	40	32	37	Rc3/8	14	38	56	45	95	M22X1.5	132	11.5	25	11	22	4	19	38	10	2	40
ø100	40	41	37	Rc1/2	15	38	56	55	114	M26X1.5	132	17	30	13	27	4	19	37	11	3	40

Code / Bore size (mm)									Mounting dimensions								With switch					
	QF	QG	R	RA	T	V	WF	X	AQ	TC	TD	TE	TM	TN	TY	TZ	O	P	T0, T5, T2, T3		T2W, T3W	
																			RD	HD	RD	HD
ø32	16	17.5	19	27	6	13	25	143	$42+\frac{Stroke}{2}$	47	12	17	50	74	67	54	59	38	5	5	7.5	7.5
ø40	16	18.5	19	32	8	13	21	152	$42+\frac{Stroke}{2}$	57	16	22	63	95	63	59	66	41	5	5	7.5	7.5
ø50	30	23.8	23.5	35.5	11	14	23	168	$47+\frac{Stroke}{2}$	67	16	22	75	107	70	63	72	43	6.5	5	9	7
ø63	30	23.8	21.5	33.5	11	14	23	168	$47+\frac{Stroke}{2}$	82	20	28	90	130	70	63	83	48	6.5	5	9	7
ø80	30	27.5	28	47	13	20	32	208	$57+\frac{Stroke}{2}$	100	20	34	110	150	89	79	104	57	12.5	6	15	8
ø100	30	27.5	28	46	16	20	32	208	$57+\frac{Stroke}{2}$	121	25	40	132	182	89	79	121	63	12	6.5	14.5	8.5

Dimensions

● Intermediate trunnion (TC) with rod side position locking

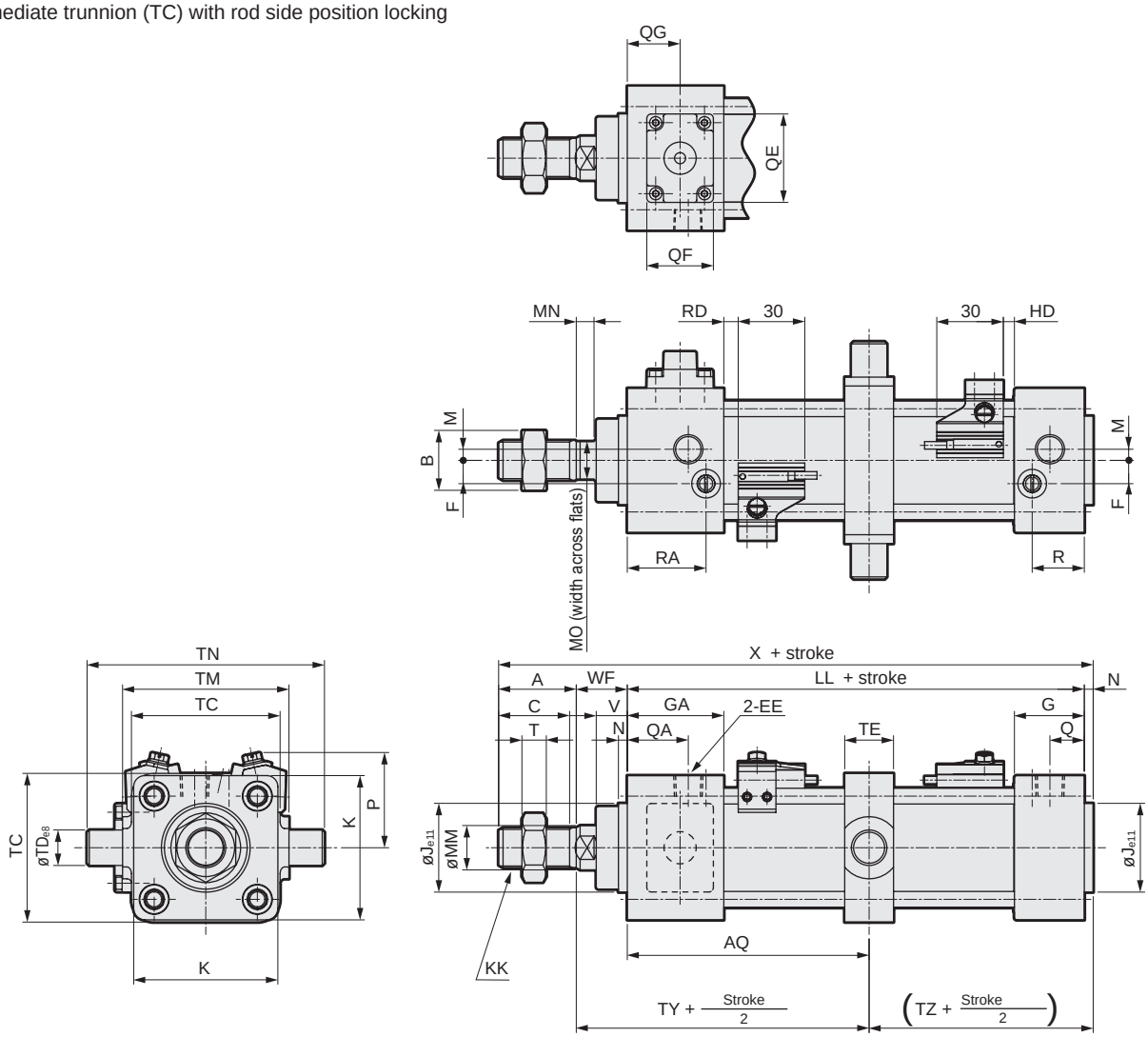

*1: Refer to page 436 for HD, RD and protruding dimensions of other switches.
*2: For the dimensions of the accessories, refer to pages 372 and 373.

Code / Bore size (mm)	Intermediate trunnion (TC) with rod side position locking basic dimensions																				
	A	B	C	EE	F	G	GA	J	K	KK	LL	M	MM	MN	MO	N	Q	QA	QC	QD	QE
ø32	22	17	19.5	Rc1/8	6.5	27	35	30	46	M10X1.25	92	4	12	5.5	10	4	13	21	12.5	6.5	22
ø40	30	22	27	Rc1/4	9	27	40	35	52	M14X1.5	97	4	16	6	14	4	14	27	12	6	22
ø50	35	27	32	Rc1/4	10.5	31.5	43.5	40	65	M18X1.5	106	5	20	8	17	4	15.5	27.5	16.5	8.5	40
ø63	35	27	32	Rc3/8	12	31.5	43.5	45	75	M18X1.5	106	9	20	8	17	4	16.5	28.5	11.5	3.5	40
ø80	40	32	37	Rc3/8	14	38	56	45	95	M22X1.5	132	11.5	25	11	22	4	19	37	10	2	40
ø100	40	41	37	Rc1/2	15	38	56	55	114	M26X1.5	132	17	30	13	27	4	19	37	11	3	40

Code / Bore size (mm)									Mounting dimensions								With switch					
	QF	QG	R	RA	T	V	WF	X	AQ	TC	TD	TE	TM	TN	TY	TZ	O	P	T0, T5, T2, T3		T2W, T3W	
																			RD	HD	RD	HD
ø32	16	17.5	19	27	6	13	25	143	50+Stroke/2	47	12	17	50	74	75	46	59	38	5	5	7.5	7.5
ø40	16	18.5	19	32	8	13	21	152	55+Stroke/2	57	16	22	63	95	76	46	66	41	5	5	7.5	7.5
ø50	30	23.8	23.5	35.5	11	14	23	168	59+Stroke/2	67	16	22	75	107	82	51	72	43	6.5	5	9	7
ø63	30	23.8	21.5	33.5	11	14	23	168	59+Stroke/2	82	20	28	90	130	82	51	83	48	6.5	5	9	7
ø80	30	27.5	28	46	13	20	32	208	75+Stroke/2	100	20	34	110	150	107	61	104	57	12.5	6	15	8
ø100	30	31.5	28	46	16	20	32	208	75+Stroke/2	121	25	40	132	182	107	61	121	63	12	6.5	14.5	8.5

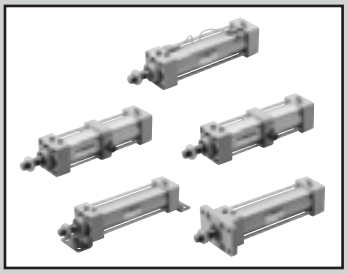

Tie rod cylinder Double acting/low speed

SCG-O Series

● Bore size: ø32/ø40/ø50/ø63/ø80/ø100

JIS symbol

RoHS CAD

Specifications

Item		SCG-O					
Bore size	mm	ø32	ø40	ø50	ø63	ø80	ø100
Actuation		Double acting					
Working fluid		Compressed air					
Max. working pressure	MPa	1.0 (≈150 psi, 10 bar)					
Min. working pressure	MPa	0.05 (≈7.3 psi, 0.5 bar)					
Proof pressure	MPa	1.6 (≈230 psi, 16 bar)					
Ambient temperature	°C	-10 (14°F) to 60 (140°F) (no freezing)					
Port size		Rc1/8	Rc1/4		Rc3/8		Rc1/2
Stroke tolerance	mm	$^{+1.0}_{0}$ (to 360), $^{+1.4}_{0}$(361 to 800)					
Working piston speed	mm/s	10 to 200 (Operate within the allowable absorbed energy.)					
Cushion		None					
Lubrication		Not available					
Allowable absorbed energy J	Without cushion	0.018	0.032	0.057	0.057	0.112	0.153
		Without any cushion, this product cannot absorb large energy generated by an external load. We recommend using an external shock absorber.					

*1: If the ø32 cylinder is expected not to operate for a long time, keep the pressure 0.1 MPa and over.

Stroke

Bore size (mm)	Standard stroke (mm)	Max. stroke (mm)	Min. stroke (mm)
ø32	25/50/75/100 150/200/250 300/350/400 450/500	600	1
ø40			
ø50			
ø63			
ø80		700	
ø100		800	

*1: The custom stroke is available in 1 mm increments.
*2: If the max. stroke is exceeded, product specifications may not be met, depending on operating conditions. Contact CKD in this case.

Min. stroke with T0/T5 switches

Switch quantity	Different surface mounting				Same surface mounting				Center trunnion mounting				Rod side trunnion mounting No position detection at rod side stroke end.	Head side trunnion mounting No position detection at head side stroke end.
Bore size (mm)	1	2	3	4	1	2	3	4	1	2	3	4	1	1
ø32	9	17	34	51	9	48(33)	78(64)	109(94)	94(94)	94(94)	169(155)	169(155)	42	42
ø40	9	18	36	54	9	48(33)	78(64)	109(94)	81(81)	81(81)	164(142)	164(142)	38	38
ø50	9	18	36	54	9	18	36	54	112(112)	112(112)	121(121)	121(121)	51	53
ø63	10	19	38	57	10	19	38	57	85(73)	85(73)	91(91)	91(91)	41	42
ø80	10	20	39	59	10	20	39	59	96(79)	96(79)	99(99)	99(99)	41	47
ø100	10	20	40	60	10	20	40	60	101(84)	101(84)	105(105)	105(105)	47	53

*1: The values in ( ) are of T*V (L-shaped lead wire).
*2: When the stroke is 15 mm or less, the two switches could turn ON at the same time. In this case, adjust switch mounting positions to be as far apart as possible.

Min. stroke with T8 switch

Switch quantity	Different surface mounting				Same surface mounting				Center trunnion mounting				Rod side trunnion mounting No position detection at rod side stroke end.	Head side trunnion mounting No position detection at head side stroke end.
Bore size (mm)	1	2	3	4	1	2	3	4	1	2	3	4	1	1
ø32	9	17	34	51	9	54(31)	84(62)	115(92)	100(100)	100(100)	191(161)	191(161)	45	45
ø40	9	18	36	54	9	54(31)	84(62)	115(92)	87(87)	87(87)	178(148)	178(148)	41	41
ø50	9	18	36	54	9	18	36	54	116(116)	116(116)	121(121)	121(121)	54	55
ø63	10	19	38	57	10	19	38	57	89(77)	89(77)	99(99)	99(99)	44	44
ø80	10	20	39	59	10	20	39	59	100(75)	100(75)	111(111)	111(111)	43	49
ø100	10	20	40	60	10	20	40	60	105(80)	105(80)	117(117)	117(117)	49	55

*1: The values in ( ) are of T*V (L-shaped lead wire).
*2: When the stroke is 15 mm or less, the two switches could turn ON at the same time. In this case, adjust switch mounting positions to be as far apart as possible.

Min. stroke with T2/T3 switches

Switch quantity	Different surface mounting				Same surface mounting				Center trunnion mounting				Rod side trunnion mounting No position detection at rod side stroke end.	Head side trunnion mounting No position detection at head side stroke end.
Bore size (mm)	1	2	3	4	1	2	3	4	1	2	3	4	1	1
ø32	5	10	20	30	5	40(33)	70(64)	101(94)	64(55)	64(55)	131(116)	131(116)	27	27
ø40	5	10	20	30	5	40(33)	70(64)	101(94)	69(60)	69(60)	152(121)	152(121)	32	32
ø50	5	10	20	30	5	10	20	30	71(62)	71(62)	71(61)	71(61)	31	32
ø63	6	11	21	32	6	11	21	32	77(68)	77(68)	77(68)	77(68)	37	38
ø80	6	11	22	33	6	11	22	33	88(79)	88(79)	88(80)	88(80)	37	43
ø100	6	11	22	33	6	11	22	33	93(84)	93(84)	93(85)	93(85)	43	49

*1: The values in ( ) are of T*V (L-shaped lead wire).
*2: When the stroke is 15 mm or less, the two switches could turn ON at the same time. In this case, adjust switch mounting positions to be as far apart as possible.

Min. stroke with T1/T2Y/T3Y/T2YD/T2W/T3W switches

Switch quantity	Different surface mounting				Same surface mounting				Center trunnion mounting				Rod side trunnion mounting No position detection at rod side stroke end.	Head side trunnion mounting No position detection at head side stroke end.
Bore size (mm)	1	2	3	4	1	2	3	4	1	2	3	4	1	1
ø32	6	11	22	33	6	62(49)	92(80)	123(110)	86(61)	86(61)	177(122)	177(122)	38	38
ø40	6	11	22	33	6	62(49)	92(80)	123(110)	91(66)	91(66)	182(127)	182(127)	43	43
ø50	6	12	24	36	6	12	24	36	93(68)	93(68)	93(68)	93(68)	42	43
ø63	6	12	24	36	6	12	24	36	99(74)	99(74)	99(74)	99(74)	48	49
ø80	7	13	25	38	7	13	25	38	110(85)	110(85)	110(86)	110(86)	48	54
ø100	7	13	26	39	7	13	26	39	115(90)	115(90)	115(92)	115(92)	54	60

*1: The values in ( ) are of T*V (L-shaped lead wire). T2YD does not have an L-shaped lead wire (V).
*2: When the stroke is 15 mm or less, the two switches could turn ON at the same time. In this case, adjust switch mounting positions to be as far apart as possible.

Switch specifications

● 1-color/2-color LED/for AC magnetic field proof

Item	2-wire proximity	2-wire proximity			3-wire proximity				2-wire reed							2-wire proximity
	T1H/ T1V	T2H/T2V/ T2JH/T2JV	T2YH/ T2YV	T2WH/ T2WV	T3H/ T3V	T3PH/ T3PV	T3YH/ T3YV	T3WH/ T3WV	T0H/T0V		T5H/T5V		T8H/T8V			T2YD (*4) T2YDT
Applications	Programming controller relay, compact solenoid valve	Dedicated for programmable controller			For programmable controller, relay				For programmable controller, relay		For programmable controller, relay (no lamp), serial		For programmable controller, relay			Dedicated for programmable controller
Output method	-				NPN output	PNP output	NPN output	NPN output	-							
Pwr. supp. V.	-				10 to 28 VDC				-							
Load voltage	85 to 265 VAC	10 to 30 VDC		24 VDC ±10%	30 VDC or less				12/24 VDC	110 VAC	5/12/24 VDC	110 VAC	12/24 VDC	110 VAC	220 VAC	24 VDC ±10%
Load current	5 to 100 mA	5 to 20 mA (*3)			100 mA or less		50 mA or less		5 to 50 mA	7 to 20 mA	50 mA or less	20 mA or less	5 to 50 mA	7 to 20 mA	7 to 10 mA	5 to 20 mA
Indicator	LED (Lit when ON)	LED (Lit when ON)	Red/green LED (Lit when ON)	Red/green LED (Lit when ON)	LED (Lit when ON)	Yellow LED (Lit when ON)	Red/green LED (Lit when ON)	Red/green LED (Lit when ON)	LED (Lit when ON)		No indicator lamp		LED (Lit when ON)			Red/green LED (Lit when ON)
Leakage current	≤ 1 mA at 100 VAC, ≤ 2 mA at 200 VAC	1 mA or less			10 μA or less				0 mA							1 mA or less
Weight g	1 m:33 3 m:87 5 m:142	1 m:18 3 m:49 5 m:80	1 m:33 3 m:87 5 m:142	1 m:18 3 m:49 5 m:80	1 m:18 3 m:49 5 m:80		1 m:33 3 m:87 5 m:142	1 m:18 3 m:49 5 m:80	1 m:18 3 m:49 5 m:80				1 m:33 3 m:87 5 m:142			1 m:61 3 m:166 5 m:272

*1: Refer to Ending Page 1 for detailed switch specifications and dimensions.
*2: Switches other than the above models, such as switches with connectors, are also available. Refer to Ending Page 1.
*3: Max. load current: 20 mA at 25°C. The current is lower than 20 mA if the operating ambient temperature around the switch is higher than 25°C. (5 to 10 mA at 60°C)
*4: Switch for AC magnetic field (T2YD/T2YDT) cannot be used in DC magnetic field.

Weight table

(Unit: kg)

Bore size (mm)	Product weight for 0 mm stroke						Added weight /50 mm stroke	Switch weight (per 1 pc.)	Switch bracket	Accessory weight	
	Basic (00)	Foot (LB)	Flange (FA, FB)	Eye bracket (CA)	Clevis bracket (CB)	Trunnion (TA, TB, TC)				I	Y
ø32	0.50	0.61	0.72	0.65	0.68	0.67	0.12	Refer to the weight in the switch specifications.	0.024	0.07	0.10
ø40	0.66	0.80	0.94	0.85	0.85	1.00	0.17		0.024	0.07	0.13
ø50	1.13	1.29	1.61	1.54	1.54	1.61	0.23		0.022	0.20	0.30
ø63	1.39	1.73	2.15	1.95	1.96	2.27	0.25		0.022	0.20	0.30
ø80	2.66	3.09	4.23	3.93	3.94	4.15	0.40		0.026	0.52	0.94
ø100	3.77	4.63	6.09	5.49	5.52	6.34	0.51		0.024	0.48	0.92

How to order

No switch (built-in magnet for switch)

SCG-O - LB - 32 ◯ N - 100 ———— M Y

With switch (built-in magnet for switch)

SCG-O - LB - 32 ◯ N - 100 - T2H - R - M Y

Model No.

Ⓐ Mounting *1

Ⓑ Bore size

Ⓒ Port thread

Ⓓ Cushion

Ⓔ Stroke

Ⓕ Switch model No.

Ⓖ Switch quantity *3

Ⓗ Option

Ⓘ Accessory *4

Code	Description
Ⓐ Mounting	
00	Basic
LB	Axial foot
FA	Rod side flange
FB	Head side flange
CA	Eye bracket
CB	Clevis bracket (pin and split pin included)
TA	Rod side trunnion
TB	Head side trunnion
TC	Intermediate trunnion
Ⓑ Bore size (mm)	
32	ø32
40	ø40
50	ø50
63	ø63
80	ø80
100	ø100
Ⓒ Port thread	
Blank	Rc thread
N	NPT thread (made-to-order product)
G	G thread (made-to-order product)
Ⓓ Cushion	
N	Without cushion
Note: Contact CKD for availability of the type with air cushion or rubber cushion.	

Ⓔ Stroke (mm)

Bore size	Stroke *2	Custom stroke
ø32	1 to 600	In 1 mm increments
ø40		
ø50		
ø63		
ø80	1 to 700	
ø100	1 to 800	

Ⓕ Switch model No.

Axial lead wire	Radial lead wire	Contact	Voltage AC	Voltage DC	Indicator	Lead wire
TOH*	T0V*	Reed	●	●	1-color LED	2-wire
T5H*	T5V*	Reed	●	●	No indicator lamp	2-wire
T8H*	T8V*	Reed	●	●	1-color LED	2-wire
T1H*	T1V*	Proximity	●		1-color LED	2-wire
T2H*	T2V*	Proximity		●	1-color LED	2-wire
T3H*	T3V*	Proximity		●	1-color LED	3-wire
T3PH*	T3PV*	Proximity		●	1-color LED	3-wire
T2WH*	T2WV*	Proximity		●	2-color LED	2-wire
T2YH*	T2YV*	Proximity		●	2-color LED	2-wire
T3WH*	T3WV*	Proximity		●	2-color LED	3-wire
T3YH*	T3YV*	Proximity		●	2-color LED	3-wire
T2YD*	-	Proximity		●	2-color LED AC magnetic field	2-wire
T2YDT*	-	Proximity		●	2-color LED AC magnetic field	2-wire
T2JH*	T2JV*	Proximity		●	1-color LED off-delay	2-wire

* Lead wire length	
Blank	1 m (standard)
3	3 m (option)
5	5 m (option)

Ⓖ Switch quantity	
R	1 on rod side
H	1 on head side
D	2
T	3

Ⓗ Option	
M	Piston rod material (stainless steel)

Ⓘ Accessory	
I	Rod eye
Y	Rod clevis (pin and split pin included)
B1	Eye bracket
B2	Clevis bracket (pin and split pin included)
B3	Eye bracket
B4	Trunnion No. 2 bracket (2 pcs./set)

⚠ Precautions for model No. selection

*1 : Mounting bracket will be shipped with the product. (Trunnion are assembled at shipment.)

*2 : Refer to pages 396 and 397 for the min. stroke with switch.

*3 : When selecting TA or TB as mounting, the number of switches is limited to "H" (1 on head side) for TA, and "R" (1 on rod side) for TB.

*4 : "I" and "Y" cannot be selected together.

[Example of model No.]

SCG-O-LB-40N-100-T2H-D-MI

Model: Tie rod cylinder, double acting/low speed

Ⓐ Mounting	: Axial foot
Ⓑ Bore size	: ø40 mm
Ⓒ Port thread	: Rc thread
Ⓓ Cushion	: Without cushion
Ⓔ Stroke	: 100 mm
Ⓕ Switch model No.	: Proximity T2H switch, lead wire 1 m
Ⓖ Switch quantity	: 2
Ⓗ Option	: Piston rod material (stainless steel)
Ⓘ Accessory	: Rod eye (included product)

How to order switch

● Switch body + mounting bracket set

SCG - T0H - 40

Switch model No. (Item Ⓕ on page 398)
Bore size (Item Ⓑ on page 398)

● Switch body only

SW - T0H

Switch model No. (Item Ⓕ on page 398)

Note: Contact CKD when using an environment-friendly T-switch.

● Switch mounting bracket set

SCG - T - 40

Mounting bracket
Bore size (Item Ⓑ on page 398)

How to order mounting bracket

Bore size (mm) / Mounting bracket	ø32	ø40	ø50	ø63	ø80	ø100
Foot (LB)	SCG-LB-32	SCG-LB-40	SCG-LB-50	SCG-LB-63	SCG-LB-80	SCG-LB-100
Flange (FA)	SCG-FA-32	SCG-FA-40	SCG-FA-50	SCG-FA-63	SCG-FA-80	SCG-FA-100
Eye bracket (CA)	SCG-CA-32	SCG-CA-40	SCG-CA-50	SCG-CA-63	SCG-CA-80	SCG-CA-100
Clevis bracket (CB)	SCG-CB-32	SCG-CB-40	SCG-CB-50	SCG-CB-63	SCG-CB-80	SCG-CB-100

Note: The foot mounting bracket (LB) is provided as 2 pcs./set.
Note: All mounting brackets are supplied with mounting bolts.

Theoretical thrust table

(Unit: N)

Bore size (mm)	Operating direction	Working pressure MPa											
		0.05	0.1	0.15	0.2	0.3	0.4	0.5	0.6	0.7	0.8	0.9	1.0
ø32	Push	40.2	80.4	$1.21x10^2$	$1.61x10^2$	$2.41x10^2$	$3.22x10^2$	$4.02x10^2$	$4.83x10^2$	$5.63x10^2$	$6.43x10^2$	$7.24x10^2$	$8.04x10^2$
	Pull	34.6	69.1	$1.04x10^2$	$1.38x10^2$	$2.07x10^2$	$2.76x10^2$	$3.46x10^2$	$4.15x10^2$	$4.84x10^2$	$5.53x10^2$	$6.22x10^2$	$6.91x10^2$
ø40	Push	62.8	$1.26x10^2$	$1.88x10^2$	$2.51x10^2$	$3.77x10^2$	$5.03x10^2$	$6.28x10^2$	$7.54x10^2$	$8.80x10^2$	$1.01x10^3$	$1.13x10^3$	$1.26x10^3$
	Pull	52.8	$1.06x10^2$	$1.58x10^2$	$2.11x10^2$	$3.17x10^2$	$4.22x10^2$	$5.28x10^2$	$6.33x10^2$	$7.39x10^2$	$8.44x10^2$	$9.50x10^2$	$1.06x10^3$
ø50	Push	98.2	$1.96x10^2$	$2.95x10^2$	$3.93x10^2$	$5.89x10^2$	$7.85x10^2$	$9.82x10^2$	$1.18x10^3$	$1.37x10^3$	$1.57x10^3$	$1.77x10^3$	$1.96x10^3$
	Pull	82.5	$1.65x10^2$	$2.47x10^2$	$3.30x10^2$	$4.95x10^2$	$6.60x10^2$	$8.25x10^2$	$9.90x10^2$	$1.15x10^3$	$1.32x10^3$	$1.48x10^3$	$1.65x10^3$
ø63	Push	$1.56x10^2$	$3.12x10^2$	$4.68x10^2$	$6.23x10^2$	$9.35x10^2$	$1.25x10^3$	$1.56x10^3$	$1.87x10^3$	$2.18x10^3$	$2.49x10^3$	$2.81x10^3$	$3.12x10^3$
	Pull	$1.40x10^2$	$2.80x10^2$	$4.20x10^2$	$5.61x10^2$	$8.41x10^2$	$1.12x10^3$	$1.40x10^3$	$1.68x10^3$	$1.96x10^3$	$2.24x10^3$	$2.52x10^3$	$2.80x10^3$
ø80	Push	$2.51x10^2$	$5.03x10^2$	$7.54x10^2$	$1.01x10^3$	$1.51x10^3$	$2.01x10^3$	$2.51x10^3$	$3.02x10^3$	$3.52x10^3$	$4.02x10^3$	$4.52x10^3$	$5.03x10^3$
	Pull	$2.27x10^2$	$4.54x10^2$	$6.80x10^2$	$9.07x10^2$	$1.36x10^3$	$1.81x10^3$	$2.27x10^3$	$2.72x10^3$	$3.17x10^3$	$3.63x10^3$	$4.08x10^3$	$4.54x10^3$
ø100	Push	$3.93x10^2$	$7.85x10^2$	$1.18x10^3$	$1.57x10^3$	$2.36x10^3$	$3.14x10^3$	$3.93x10^3$	$4.71x10^3$	$5.50x10^3$	$6.28x10^3$	$7.07x10^3$	$7.85x10^3$
	Pull	$3.57x10^2$	$7.15x10^2$	$1.07x10^3$	$1.43x10^3$	$2.14x10^3$	$2.86x10^3$	$3.57x10^3$	$4.29x10^3$	$5.00x10^3$	$5.72x10^3$	$6.43x10^3$	$7.15x10^3$

Dimensions

Same as double acting/single rod. Refer to pages 363 to 371.

Internal structure and parts list

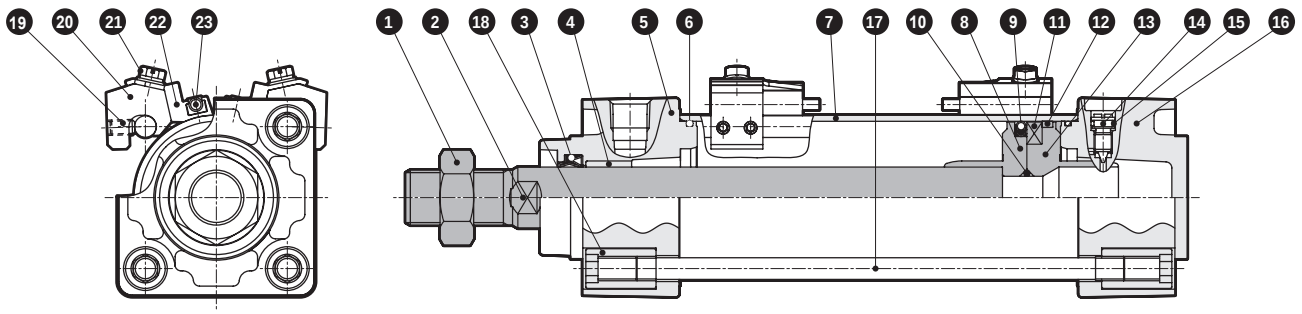

No.	Part name	Material	Remarks
1	Rod nut	Steel	Nickel plating
2	Piston rod	Steel	Industrial chrome plating
3	Rod packing	Nitrile rubber	
4	Bush	Oil-impregnated bearing alloy	
5	Rod cover	Aluminum alloy die-casting	Paint
6	Cylinder gasket	Nitrile rubber	
7	Cylinder tube	Aluminum alloy	Hard alumite treatment
8	Piston R	ø32, ø40: Aluminum alloy ø50 to ø100: Aluminum alloy die-casting	
9	Piston packing	Nitrile rubber	
10	Piston gasket	Nitrile rubber	
11	Magnet	Plastic	
12	Wear ring	Polyacetal resin	
13	Piston H	ø32, ø40: Aluminum alloy ø50 to ø100: Aluminum alloy die-casting	
14	Cushion needle	Copper alloy	Nickel plating
15	Needle gasket	Nitrile rubber	
16	Head cover	Aluminum alloy die-casting	Paint
17	Tie rod	Steel	Zinc chromate treatment
18	Round nut	Steel	Zinc chromate treatment
19	Hexagon socket set screw	Steel	Black finish
20	Switch mounting base	Aluminum alloy	
21	Slotted head hexagon head bolt with captive washer	Stainless steel	
22	Switch holder	Aluminum alloy	
23	Cylinder switch		

Repair parts list

Bore size (mm)	Kit No.	Repair parts No.
ø32	SCG-O-32NK	3 6 9 12 15
ø40	SCG-O-40NK	
ø50	SCG-O-50NK	
ø63	SCG-O-63NK	
ø80	SCG-O-80NK	
ø100	SCG-O-100NK	

Note: Specify the kit No. when placing an order.

Material of mounting bracket

Mounting	Material	Remarks
LB	Steel	Nickel plating
FA/FB	Steel	Paint
CA/CB	Cast iron	Paint
TA/TB/TC	Cast iron	Paint

Note: Mounting bracket will be shipped with the product.
Trunnion (TA, TB, TC) are assembled at shipment.

MEMO

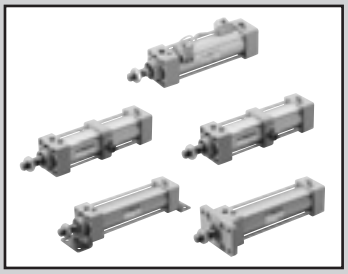

Tie rod cylinder Double acting/low friction (constant friction when pressurized)

SCG-U Series

● Bore size: ø32/ø40/ø50/ø63/ø80/ø100

RoHS CAD

Specifications

Item		SCG-U					
Bore size	mm	ø32	ø40	ø50	ø63	ø80	ø100
Actuation		Double acting					
Working fluid		Compressed air					
Max. working pressure	MPa	0.7 (≈100 psi, 7 bar)					
Min. working pressure	MPa	0.03 (≈4.4 psi, 0.3 bar)					
Proof pressure	MPa	1.0 (≈150 psi, 10 bar)					
Ambient temperature	°C	5 (41°F) to 60 (140°F)					
Port size		Rc1/8	Rc1/4		Rc3/8		Rc1/2
Stroke tolerance	mm	$^{+1.0}_{0}$ (to 360), $^{+1.4}_{0}$ (361 to 800)					
Working piston speed	mm/s	10 to 1000 (Operate within the allowable absorbed energy.)					
Cushion		None					
Lubrication		Not available					
Internal leakage	L/min	5				8	
Allowable absorbed energy	J	0.018	0.032	0.057	0.057	0.112	0.153
		Without any cushion, this product cannot absorb large energy generated by an external load. We recommend using an external shock absorber.					

Stroke

Bore size (mm)	Standard stroke (mm)	Max. stroke (mm)	Min. stroke (mm)
ø32	25/50/75/100 150/200/250 300/350/400 450/500	600	1
ø40			
ø50			
ø63			
ø80		700	
ø100		800	

*1: The custom stroke is available in 1 mm increments.
*2: If the max. stroke is exceeded, product specifications may not be met, depending on operating conditions. Contact CKD in this case.

Min. stroke with T0/T5 switches

Switch quantity	Different surface mounting				Same surface mounting				Center trunnion mounting				Rod side trunnion mounting No position detection at rod side stroke end.	Head side trunnion mounting No position detection at head side stroke end.
Bore size (mm)	1	2	3	4	1	2	3	4	1	2	3	4	1	1
ø32	9	17	34	51	9	48(33)	78(64)	109(94)	94(94)	94(94)	169(155)	169(155)	42	42
ø40	9	18	36	54	9	48(33)	78(64)	109(94)	81(81)	81(81)	164(142)	164(142)	38	38
ø50	9	18	36	54	9	18	36	54	112(112)	112(112)	121(121)	121(121)	51	53
ø63	10	19	38	57	10	19	38	57	85(73)	85(73)	91(91)	91(91)	41	42
ø80	10	20	39	59	10	20	39	59	96(79)	96(79)	99(99)	99(99)	41	47
ø100	10	20	40	60	10	20	40	60	101(84)	101(84)	105(105)	105(105)	47	53

*1: The values in ( ) are of T*V (L-shaped lead wire).
*2: When the stroke is 15 mm or less, the two switches could turn ON at the same time. In this case, adjust switch mounting positions to be as far apart as possible.

Min. stroke with T8 switch

Switch quantity	Different surface mounting				Same surface mounting				Center trunnion mounting				Rod side trunnion mounting No position detection at rod side stroke end.	Head side trunnion mounting No position detection at head side stroke end.
Bore size (mm)	1	2	3	4	1	2	3	4	1	2	3	4	1	1
ø32	9	17	34	51	9	54(31)	84(62)	115(92)	100(100)	100(100)	191(161)	191(161)	45	45
ø40	9	18	36	54	9	54(31)	84(62)	115(92)	87(87)	87(87)	178(148)	178(148)	41	41
ø50	9	18	36	54	9	18	36	54	116(116)	116(116)	121(121)	121(121)	54	55
ø63	10	19	38	57	10	19	38	57	89(77)	89(77)	99(99)	99(99)	44	44
ø80	10	20	39	59	10	20	39	59	100(75)	100(75)	111(111)	111(111)	43	49
ø100	10	20	40	60	10	20	40	60	105(80)	105(80)	117(117)	117(117)	49	55

*1: The values in ( ) are of T*V (L-shaped lead wire).
*2: When the stroke is 15 mm or less, the two switches could turn ON at the same time. In this case, adjust switch mounting positions to be as far apart as possible.

Min. stroke with T2/T3 switches

Switch quantity	Different surface mounting				Same surface mounting				Center trunnion mounting				Rod side trunnion mounting No position detection at rod side stroke end.	Head side trunnion mounting No position detection at head side stroke end.
Bore size (mm)	1	2	3	4	1	2	3	4	1	2	3	4	1	1
ø32	5	10	20	30	5	40(33)	70(64)	101(94)	64(55)	64(55)	131(116)	131(116)	27	27
ø40	5	10	20	30	5	40(33)	70(64)	101(94)	69(60)	69(60)	152(121)	152(121)	32	32
ø50	5	10	20	30	5	10	20	30	71(62)	71(62)	71(61)	71(61)	31	32
ø63	6	11	21	32	6	11	21	32	77(68)	77(68)	77(68)	77(68)	37	38
ø80	6	11	22	33	6	11	22	33	88(79)	88(79)	88(80)	88(80)	37	43
ø100	6	11	22	33	6	11	22	33	93(84)	93(84)	93(85)	93(85)	43	49

*1: The values in ( ) are of T*V (L-shaped lead wire).
*2: When the stroke is 15 mm or less, the two switches could turn ON at the same time. In this case, adjust switch mounting positions to be as far apart as possible.

Min. stroke with T1/T2Y/T3Y/T2YD/T2W/T3W switches

Switch quantity	Different surface mounting				Same surface mounting				Center trunnion mounting				Rod side trunnion mounting No position detection at rod side stroke end.	Head side trunnion mounting No position detection at head side stroke end.
Bore size (mm)	1	2	3	4	1	2	3	4	1	2	3	4	1	1
ø32	6	11	22	33	6	62(49)	92(80)	123(110)	86(61)	86(61)	177(122)	177(122)	38	38
ø40	6	11	22	33	6	62(49)	92(80)	123(110)	91(66)	91(66)	182(127)	182(127)	43	43
ø50	6	12	24	36	6	12	24	36	93(68)	93(68)	93(68)	93(68)	42	43
ø63	6	12	24	36	6	12	24	36	99(74)	99(74)	99(74)	99(74)	48	49
ø80	7	13	25	38	7	13	25	38	110(85)	110(85)	110(86)	110(86)	48	54
ø100	7	13	26	39	7	13	26	39	115(90)	115(90)	115(92)	115(92)	54	60

*1: The values in ( ) are of T*V (L-shaped lead wire). T2YD does not have an L-shaped lead wire (V).
*2: When the stroke is 15 mm or less, the two switches could turn ON at the same time. In this case, adjust switch mounting positions to be as far apart as possible.

Switch specifications

● 1-color/2-color LED/for AC magnetic field proof

Item	2-wire proximity	2-wire proximity			3-wire proximity				2-wire reed							2-wire proximity
	T1H/ T1V	T2H/T2V/ T2JH/T2JV	T2YH/ T2YV	T2WH/ T2WV	T3H/ T3V	T3PH/ T3PV	T3YH/ T3YV	T3WH/ T3WV	T0H/T0V		T5H/T5V		T8H/T8V			T2YD (*4) T2YDT
Applications	Programming controller relay, compact solenoid valve	Dedicated for programmable controller			For programmable controller, relay				For programmable controller, relay		For programmable controller, relay (no lamp), serial		For programmable controller, relay			Dedicated for programmable controller
Output method	-				NPN output	PNP output	NPN output	NPN output	-							
Pwr. supp. V.	-				10 to 28 VDC				-							
Load voltage	85 to 265 VAC	10 to 30 VDC		24 VDC ±10%	30 VDC or less				12/24 VDC	110 VAC	5/12/24 VDC	110 VAC	12/24 VDC	110 VAC	220 VAC	24 VDC ±10%
Load current	5 to 100 mA	5 to 20 mA (*3)			100 mA or less		50 mA or less		5 to 50 mA	7 to 20 mA	50 mA or less	20 mA or less	5 to 50 mA	7 to 20 mA	7 to 10 mA	5 to 20 mA
Indicator	LED (Lit when ON)	LED (Lit when ON)	Red/green LED (Lit when ON)	Red/green LED (Lit when ON)	LED (Lit when ON)	Yellow LED (Lit when ON)	Red/green LED (Lit when ON)	Red/green LED (Lit when ON)	LED (Lit when ON)		No indicator lamp		LED (Lit when ON)			Red/green LED (Lit when ON)
Leakage current	≤ 1 mA at 100 VAC, ≤ 2 mA at 200 VAC	1 mA or less			10 μA or less				0 mA							1 mA or less
Weight g	1 m:33 3 m:87 5 m:142	1 m:18 3 m:49 5 m:80	1 m:33 3 m:87 5 m:142	1 m:18 3 m:49 5 m:80	1 m:18 3 m:49 5 m:80		1 m:33 3 m:87 5 m:142	1 m:18 3 m:49 5 m:80	1 m:18 3 m:49 5 m:80				1 m:33 3 m:87 5 m:142			1 m:61 3 m:166 5 m:272

*1: Refer to Ending Page 1 for detailed switch specifications and dimensions.
*2: Switches other than the above models, such as switches with connectors, are also available. Refer to Ending Page 1.
*3: Max. load current: 20 mA at 25°C. The current is lower than 20 mA if the operating ambient temperature around the switch is higher than 25°C. (5 to 10 mA at 60°C)
*4: Switch for AC magnetic field (T2YD/T2YDT) cannot be used in DC magnetic field.

Weight table

(Unit: kg)

Bore size (mm)	Product weight for 0 mm stroke						Added weight /50 mm stroke	Switch weight (per 1 pc.)	Switch bracket	Mounting bracket weight	
	Basic (00)	Foot (LB)	Flange (FA, FB)	Eye bracket (CA)	Clevis bracket (CB)	Trunnion (TC)				I	Y
ø32	0.50	0.61	0.58	0.65	0.68	0.67	0.12	Refer to the weight in the switch specifications.	0.024	0.07	0.10
ø40	0.66	0.80	0.77	0.85	0.85	1.00	0.17		0.024	0.07	0.13
ø50	1.13	1.29	1.31	1.54	1.54	1.61	0.23		0.022	0.20	0.30
ø63	1.39	1.73	1.68	1.95	1.96	2.27	0.25		0.022	0.20	0.30
ø80	2.66	3.09	4.23	3.93	3.94	4.15	0.40		0.026	0.52	0.94
ø100	3.77	4.63	6.09	5.49	5.52	6.34	0.51		0.024	0.48	0.92

How to order

No switch (built-in magnet for switch)

SCG-U - LB - 32 ◯ N - 100 ———— M I

With switch (built-in magnet for switch)

SCG-U - LB - 32 ◯ N - 100 - T2H - R - M I

Model No.

Ⓐ Mounting *1

Ⓑ Bore size

Ⓒ Port thread

Ⓓ Cushion

Ⓔ Stroke

Ⓕ Switch model No.

Ⓖ Switch quantity *3

Ⓗ Option

Ⓘ Accessory *4

Code	Description
Ⓐ Mounting	
00	Basic
LB	Axial foot
FA	Rod side flange
FB	Head side flange
CA	Eye bracket
CB	Clevis bracket (pin and split pin included)
TA	Rod side trunnion
TB	Head side trunnion
TC	Intermediate trunnion
Ⓑ Bore size (mm)	
32	ø32
40	ø40
50	ø50
63	ø63
80	ø80
100	ø100
Ⓒ Port thread	
Blank	Rc thread
N	NPT thread (made-to-order product)
G	G thread (made-to-order product)
Ⓓ Cushion	
N	Without cushion

Ⓔ Stroke (mm)

Bore size	Stroke *2	Custom stroke
ø32	1 to 600	In 1 mm increments
ø40		
ø50		
ø63		
ø80	1 to 700	
ø100	1 to 800	

Ⓕ Switch model No.

Axial lead wire	Radial lead wire	Contact	Voltage AC	Voltage DC	Indicator	Lead wire
TOH*	T0V*	Reed	●	●	1-color LED	2-wire
T5H*	T5V*	Reed	●	●	No indicator lamp	2-wire
T8H*	T8V*	Reed	●	●	1-color LED	2-wire
T1H*	T1V*	Proximity	●		1-color LED	2-wire
T2H*	T2V*	Proximity		●	1-color LED	2-wire
T3H*	T3V*	Proximity		●	1-color LED	3-wire
T3PH*	T3PV*	Proximity		●	1-color LED	3-wire
T2WH*	T2WV*	Proximity		●	2-color LED	2-wire
T2YH*	T2YV*	Proximity		●	2-color LED	2-wire
T3WH*	T3WV*	Proximity		●	2-color LED	3-wire
T3YH*	T3YV*	Proximity		●	2-color LED	3-wire
T2YD*	-	Proximity		●	2-color LED AC magnetic field	2-wire
T2YDT*	-	Proximity		●	2-color LED AC magnetic field	2-wire
T2JH*	T2JV*	Proximity		●	1-color LED off-delay	2-wire

* Lead wire length	
Blank	1 m (standard)
3	3 m (option)
5	5 m (option)

Ⓖ Switch quantity	
R	1 on rod side
H	1 on head side
D	2
T	3

Ⓗ Option	
M	Piston rod material (stainless steel)

Ⓘ Accessory	
I	Rod eye
Y	Rod clevis (pin and split pin included)
B1	Eye bracket
B2	Clevis bracket (pin and split pin included)
B3	Eye bracket
B4	Trunnion No. 2 bracket (2 pcs./set)

⚠ Precautions for model No. selection

*1 : Mounting bracket will be shipped with the product. (Trunnion are assembled at shipment.)

*2 : Refer to pages 402 and 403 for the min. stroke with switch.

*3 : When selecting TA or TB as mounting, the number of switches is limited to "H" (1 on head side) for TA, and "R" (1 on rod side) for TB.

*4 : "I" and "Y" cannot be selected together.

[Example of model No.]

SCG-U-LB-40N-100-T2H-D-MI

Model: Tie rod cylinder, double acting/low friction (constant friction when pressurized)

- Ⓐ Mounting : Axial foot
- Ⓑ Bore size : ø40 mm
- Ⓒ Port thread : Rc thread
- Ⓓ Cushion : Without cushion
- Ⓔ Stroke : 100 mm
- Ⓕ Switch model No. : Proximity T2H switch, lead wire 1 m
- Ⓖ Switch quantity : 2
- Ⓗ Option : Piston rod material (stainless steel)
- Ⓘ Accessory : Rod eye (included product)

How to order switch

● Switch body + mounting bracket set

SCG - T0H - 40

- T0H: Switch model No. (Item Ⓕ on page 404)
- 40: Bore size (Item Ⓑ on page 404)

● Switch body only

SW - T0H

- T0H: Switch model No. (Item Ⓕ on page 404)

Note: Contact CKD when using an environment-friendly T-switch.

● Switch mounting bracket set

SCG - T - 40

- T: Mounting bracket
- 40: Bore size (Item Ⓑ on page 404)

How to order mounting bracket

Bore size (mm) / Mounting bracket	ø32	ø40	ø50	ø63	ø80	ø100
Foot (LB)	SCG-LB-32	SCG-LB-40	SCG-LB-50	SCG-LB-63	SCG-LB-80	SCG-LB-100
Flange (FA) (FB) *1	SCG-FA-32	SCG-FA-40	SCG-FA-50	SCG-FA-63	SCG-FA-80	SCG-FA-100
Eye bracket (CA)	SCG-CA-32	SCG-CA-40	SCG-CA-50	SCG-CA-63	SCG-CA-80	SCG-CA-100
Clevis bracket (CB)	SCG-CB-32	SCG-CB-40	SCG-CB-50	SCG-CB-63	SCG-CB-80	SCG-CB-100

*1: The foot mounting bracket (LB) is provided as 2 pcs./set.
*2: All mounting brackets are supplied with mounting bolts.

Theoretical thrust table

(Unit: N)

Bore size (mm)	Operating direction	Working pressure MPa 0.03	0.1	0.15	0.2	0.3	0.4	0.5	0.6	0.7
ø32	Push	24.1	80.4	1.21×10^2	1.61×10^2	2.41×10^2	3.22×10^2	4.02×10^2	4.83×10^2	5.63×10^2
	Pull	20.7	69.1	1.04×10^2	1.38×10^2	2.07×10^2	2.76×10^2	3.46×10^2	4.15×10^2	4.84×10^2
ø40	Push	37.8	1.26×10^2	1.88×10^2	2.51×10^2	3.77×10^2	5.03×10^2	6.28×10^2	7.54×10^2	8.80×10^2
	Pull	31.8	1.06×10^2	1.58×10^2	2.11×10^2	3.17×10^2	4.22×10^2	5.28×10^2	6.33×10^2	7.39×10^2
ø50	Push	58.8	1.96×10^2	2.95×10^2	3.93×10^2	5.89×10^2	7.85×10^2	9.82×10^2	1.18×10^3	1.37×10^3
	Pull	49.5	1.65×10^2	2.47×10^2	3.30×10^2	4.95×10^2	6.60×10^2	8.25×10^2	9.90×10^2	1.15×10^3
ø63	Push	93.6	3.12×10^2	4.68×10^2	6.23×10^2	9.35×10^2	1.25×10^3	1.56×10^3	1.87×10^3	2.18×10^3
	Pull	84.0	2.80×10^2	4.20×10^2	5.61×10^2	8.41×10^2	1.12×10^3	1.40×10^3	1.68×10^3	1.96×10^3
ø80	Push	1.51×10^2	5.03×10^2	7.54×10^2	1.01×10^3	1.51×10^3	2.01×10^3	2.51×10^3	3.02×10^3	3.52×10^3
	Pull	1.36×10^2	4.54×10^2	6.80×10^2	9.07×10^2	1.36×10^3	1.81×10^3	2.27×10^3	2.72×10^3	3.17×10^3
ø100	Push	2.36×10^2	7.85×10^2	1.18×10^3	1.57×10^3	2.36×10^3	3.14×10^3	3.93×10^3	4.71×10^3	5.50×10^3
	Pull	2.15×10^2	7.15×10^2	1.07×10^3	1.43×10^3	2.14×10^3	2.86×10^3	3.57×10^3	4.29×10^3	5.00×10^3

Dimensions

Same as SCG Series (double acting/single rod). Refer to pages 363 to 371.

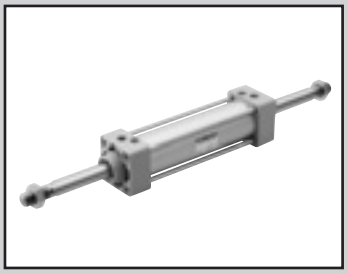

Tie rod cylinder Double acting/double rod

SCG-D Series

● Bore size: ø32/ø40/ø50/ø63/ø80/ø100

JIS symbol

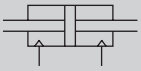

RoHS CAD

Specifications

Item		SCG-D					
Bore size mm		ø32	ø40	ø50	ø63	ø80	ø100
Actuation		Double acting					
Working fluid		Compressed air					
Max. working pressure MPa		1.0 (≈150 psi, 10 bar)					
Min. working pressure MPa		0.1 (≈15 psi, 1 bar)					
Proof pressure MPa		1.6 (≈230 psi, 16 bar)					
Ambient temperature °C		-10 (14°F) to 60 (140°F) (no freezing)					
Port size		Rc1/8	Rc1/4		Rc3/8		Rc1/2
Stroke tolerance mm	With rubber cushion	$^{+1.4}_{0}$(to 800)					
	With air cushion	$^{+1.0}_{0}$(to 360), $^{+1.4}_{0}$(361 to 800)					
Working piston speed mm/s		50 to 1000 (Operate within the allowable absorbed energy.)					
Cushion		Either air cushion or rubber cushion can be selected					
Effective air cushion length mm		8.6	8.6	13.4	13.4	15.4	15.4
Lubrication		Not required (use turbine oil class 1 ISO VG32 if necessary for lubrication)					
Lubrication allowable absorbed energy J	With rubber cushion	0.5	0.9	1.6	1.6	3.3	5.8
	With air cushion	2.5	3.7	8.0	14.4	25.4	45.6

Stroke

Bore size (mm)	Standard stroke (mm)	Max. stroke (mm)	Min. stroke (mm)
ø32	25/50/75/100 150/200/250 300/350/400 450/500	600	1
ø40			
ø50			
ø63			
ø80		700	
ø100		800	

*1: The custom stroke is available in 1 mm increments.
*2: If the max. stroke is exceeded, product specifications may not be met, depending on operating conditions. Contact CKD in this case.
*3: For the type with bellows, the available stroke is 500 mm for ø32 to ø40 bore size, 600 mm for ø50 to ø63, and 800 mm for ø80 to ø100.

Min. stroke with T0/T5 switches

Switch quantity	Different surface mounting				Same surface mounting				Center trunnion mounting				Rod side trunnion mounting No position detection at rod side stroke end.	Head side trunnion mounting No position detection at head side stroke end.
Bore size (mm)	1	2	3	4	1	2	3	4	1	2	3	4	1	1
ø32	9	17	34	51	9	48(33)	78(64)	109(94)	94(94)	94(94)	169(155)	169(155)	42	42
ø40	9	18	36	54	9	48(33)	78(64)	109(94)	81(81)	81(81)	164(142)	164(142)	38	38
ø50	9	18	36	54	9	18	36	54	112(112)	112(112)	121(121)	121(121)	51	53
ø63	10	19	38	57	10	19	38	57	85(73)	85(73)	91(91)	91(91)	41	42
ø80	10	20	39	59	10	20	39	59	96(79)	96(79)	99(99)	99(99)	41	47
ø100	10	20	40	60	10	20	40	60	101(84)	101(84)	105(105)	105(105)	47	53

*1: The values in ( ) are of T*V (L-shaped lead wire).
*2: When the stroke is 15 mm or less, the two switches could turn ON at the same time. In this case, adjust switch mounting positions to be as far apart as possible.

Min. stroke with T8 switch

Switch quantity	Different surface mounting				Same surface mounting				Center trunnion mounting				Rod side trunnion mounting No position detection at rod side stroke end.	Head side trunnion mounting No position detection at head side stroke end.
Bore size (mm)	1	2	3	4	1	2	3	4	1	2	3	4	1	1
ø32	9	17	34	51	9	54(31)	84(62)	115(92)	100(100)	100(100)	191(161)	191(161)	45	45
ø40	9	18	36	54	9	54(31)	84(62)	115(92)	87(87)	87(87)	178(148)	178(148)	41	41
ø50	9	18	36	54	9	18	36	54	116(116)	116(116)	121(121)	121(121)	54	55
ø63	10	19	38	57	10	19	38	57	89(77)	89(77)	99(99)	99(99)	44	44
ø80	10	20	39	59	10	20	39	59	100(75)	100(75)	111(111)	111(111)	43	49
ø100	10	20	40	60	10	20	40	60	105(80)	105(80)	117(117)	117(117)	49	55

*1: The values in ( ) are of T*V (L-shaped lead wire).
*2: When the stroke is 15 mm or less, the two switches could turn ON at the same time. In this case, adjust switch mounting positions to be as far apart as possible.

Min. stroke with T2/T3 switches

Switch quantity	Different surface mounting				Same surface mounting				Center trunnion mounting				Rod side trunnion mounting No position detection at rod side stroke end.	Head side trunnion mounting No position detection at head side stroke end.
Bore size (mm)	1	2	3	4	1	2	3	4	1	2	3	4	1	1
ø32	5	10	20	30	5	40(33)	70(64)	101(94)	64(55)	64(55)	131(116)	131(116)	27	27
ø40	5	10	20	30	5	40(33)	70(64)	101(94)	69(60)	69(60)	152(121)	152(121)	32	32
ø50	5	10	20	30	5	10	20	30	71(62)	71(62)	71(61)	71(61)	31	32
ø63	6	11	21	32	6	11	21	32	77(68)	77(68)	77(68)	77(68)	37	38
ø80	6	11	22	33	6	11	22	33	88(79)	88(79)	88(80)	88(80)	37	43
ø100	6	11	22	33	6	11	22	33	93(84)	93(84)	93(85)	93(85)	43	49

*1: The values in ( ) are of T*V (L-shaped lead wire).
*2: When the stroke is 15 mm or less, the two switches could turn ON at the same time. In this case, adjust switch mounting positions to be as far apart as possible.

Min. stroke with T1/T2Y/T3Y/T2YD/T2W/T3W switches

Switch quantity	Different surface mounting				Same surface mounting				Center trunnion mounting				Rod side trunnion mounting No position detection at rod side stroke end.	Head side trunnion mounting No position detection at head side stroke end.
Bore size (mm)	1	2	3	4	1	2	3	4	1	2	3	4	1	1
ø32	6	11	22	33	6	62(49)	92(80)	123(110)	86(61)	86(61)	177(122)	177(122)	38	38
ø40	6	11	22	33	6	62(49)	92(80)	123(110)	91(66)	91(66)	182(127)	182(127)	43	43
ø50	6	12	24	36	6	12	24	36	93(68)	93(68)	93(68)	93(68)	42	43
ø63	6	12	24	36	6	12	24	36	99(74)	99(74)	99(74)	99(74)	48	49
ø80	7	13	25	38	7	13	25	38	110(85)	110(85)	110(86)	110(86)	48	54
ø100	7	13	26	39	7	13	26	39	115(90)	115(90)	115(92)	115(92)	54	60

*1: The values in ( ) are of T*V (L-shaped lead wire). T2YD does not have an L-shaped lead wire (V).
*2: When the stroke is 15 mm or less, the two switches could turn ON at the same time. In this case, adjust switch mounting positions to be as far apart as possible.

Switch specifications

● 1-color/2-color LED/for AC magnetic field proof

Item	2-wire proximity	2-wire proximity			3-wire proximity				2-wire reed							2-wire proximity
	T1H/ T1V	T2H/T2V/ T2JH/T2JV	T2YH/ T2YV	T2WH/ T2WV	T3H/ T3V	T3PH/ T3PV	T3YH/ T3YV	T3WH/ T3WV	T0H/T0V		T5H/T5V		T8H/T8V			T2YD (*4) T2YDT
Applications	Programming controller relay, compact solenoid valve	Dedicated for programmable controller			For programmable controller, relay				For programmable controller, relay		For programmable controller, relay (no lamp), serial		For programmable controller, relay			Dedicated for programmable controller
Output method	-				NPN output	PNP output	NPN output	NPN output	-							
Pwr. supp. V.	-				10 to 28 VDC				-							
Load voltage	85 to 265 VAC	10 to 30 VDC		24 VDC ±10%	30 VDC or less				12/24 VDC	110 VAC	5/12/24 VDC	110 VAC	12/24 VDC	110 VAC	220 VAC	24 VDC ±10%
Load current	5 to 100 mA	5 to 20 mA (*3)			100 mA or less		50 mA or less		5 to 50 mA	7 to 20 mA	50 mA or less	20 mA or less	5 to 50 mA	7 to 20 mA	7 to 10 mA	5 to 20 mA
Indicator	LED (Lit when ON)	LED (Lit when ON)	Red/green LED (Lit when ON)	Red/green LED (Lit when ON)	LED (Lit when ON)	Yellow LED (Lit when ON)	Red/green LED (Lit when ON)	Red/green LED (Lit when ON)	LED (Lit when ON)		No indicator lamp		LED (Lit when ON)			Red/green LED (Lit when ON)
Leakage current	≤ 1 mA at 100 VAC, ≤ 2 mA at 200 VAC	1 mA or less			10 μA or less				0 mA							1 mA or less
Weight g	1 m:33 3 m:87 5 m:142	1 m:18 3 m:49 5 m:80	1 m:33 3 m:87 5 m:142	1 m:18 3 m:49 5 m:80	1 m:18 3 m:49 5 m:80		1 m:33 3 m:87 5 m:142	1 m:18 3 m:49 5 m:80	1 m:18 3 m:49 5 m:80				1 m:33 3 m:87 5 m:142			1 m:61 3 m:166 5 m:272

*1: Refer to Ending Page 1 for detailed switch specifications and dimensions.
*2: Switches other than the above models, such as switches with connectors, are also available. Refer to Ending Page 1.
*3: Max. load current: 20 mA at 25°C. The current is lower than 20 mA if the operating ambient temperature around the switch is higher than 25°C. (5 to 10 mA at 60°C)
*4: Switch for AC magnetic field (T2YD/T2YDT) cannot be used in DC magnetic field.

Weight table

(Unit: kg)

Bore size (mm)	Product weight for 0 mm stroke				Stroke:Added weight/50 mm	Switch weight (per 1 pc)	Switch bracket	Accessory weight	
	Basic (00)	Foot (LB)	Flange (FA, FB)	Trunnion (TA, TB, TC)				I	Y
ø32	0.57	0.68	0.79	0.74	0.16	Refer to the weight in the switch specifications.	0.024	0.07	0.10
ø40	0.80	0.94	1.08	1.14	0.25		0.024	0.07	0.13
ø50	1.38	1.54	1.86	1.86	0.35		0.022	0.20	0.30
ø63	1.64	1.98	2.40	2.52	0.37		0.022	0.20	0.30
ø80	3.11	3.54	4.68	4.60	0.59		0.026	0.52	0.94
ø100	4.41	5.27	6.73	6.98	0.79		0.024	0.48	0.92

SCP*3
CMK2
CMA2
SCM
SCG
SCA2
SCS2
CKV2
CAV2/ COVP/N2
SSD2
SSG
SSD
CAT
MDC2
MVC
SMG
MSD/ MSDG
FC*
STK
SRL3
SRG3
SRM3
SRT3
MRL2
MRG2
SM-25
ShkAbs
FJ
FK
Spd Contr
Ending

How to order

No switch (built-in magnet for switch)

SCG-D - LB - 32 ◯ B - 100 ——— J Y

With switch (built-in magnet for switch)

SCG-D - LB - 32 ◯ B - 100 - T2H - R - J Y

Model No.

Ⓐ Mounting *1

Ⓑ Bore size

Ⓒ Port thread

Ⓓ Cushion

Ⓔ Stroke

Ⓕ Switch model No.

Ⓖ Switch quantity *3

Ⓗ Option *4

Ⓘ Accessory

Code	Description
Ⓐ Mounting	
00	Basic
LB	Axial foot
FA	Rod side flange
FB	Head side flange
TA	Rod side trunnion
TB	Head side trunnion
TC	Intermediate trunnion

Ⓑ Bore size (mm)	
32	ø32
40	ø40
50	ø50
63	ø63
80	ø80
100	ø100

Ⓒ Port thread	
Blank	Rc thread
N	NPT thread (made-to-order product)
G	G thread (made-to-order product)

Ⓓ Cushion	
B	Two-sided air cushion (basic)
D	Two-sided rubber cushion

Note: The rubber cushion has a longer total length than the air cushion.

Ⓔ Stroke (mm)

Bore size	Stroke *2	Custom stroke
ø32	**1 to 600**	**In 1 mm increments**
ø40		
ø50		
ø63		
ø80	**1 to 700**	
ø100	**1 to 800**	

Ⓕ Switch model No.

Axial lead wire	Radial lead wire	Contact	Voltage AC	Voltage DC	Indicator	Lead wire
TOH*	**T0V***	Reed	●	●	1-color LED	2-wire
T5H*	**T5V***	Reed	●	●	No indicator lamp	2-wire
T8H*	**T8V***	Reed	●	●	1-color LED	2-wire
T1H*	**T1V***	Proximity	●		1-color LED	2-wire
T2H*	**T2V***	Proximity		●	1-color LED	2-wire
T3H*	**T3V***	Proximity		●	1-color LED	3-wire
T3PH*	**T3PV***	Proximity		●	1-color LED	3-wire
T2WH*	**T2WV***	Proximity		●	2-color LED	2-wire
T2YH*	**T2YV***	Proximity		●	2-color LED	2-wire
T3WH*	**T3WV***	Proximity		●	2-color LED	3-wire
T3YH*	**T3YV***	Proximity		●	2-color LED	3-wire
T2YD*	**-**	Proximity		●	2-color LED for AC magnetic field	2-wire
T2YDT*	**-**	Proximity		●	2-color LED for AC magnetic field	2-wire
T2JH*	**T2JV***	Proximity		●	1-color LED off-delay	2-wire

*** Lead wire length**	
Blank	1 m (standard)
3	3 m (option)
5	5 m (option)

Ⓖ Switch quantity	
R	1 on rod side
H	1 on head side
D	2
T	3

Ⓗ Option

		Max. ambient temp.	Instantaneous ambient temp
J	Bellows	100°C	200°C
M	Piston rod material (stainless steel)		
P6	Copper and PTFE free		

Ⓘ Accessory	
I	Rod eye
Y	Rod clevis (pin and split pin included)
B4	Trunnion No. 2 bracket (2 pcs./set)

⚠ Precautions for model No. selection

*1 : Mounting bracket will be shipped with the product. (If the product is the trunnion (TA, TB or TC) with bellows and the mounting bracket is LB or FA, it will be attached with the product.)

*2 : Refer to pages 406 and 407 for the min. stroke with switch.

*3 : When selecting TA or TB as mounting, the number of switches is limited to "H" (1 on head side) for TA, and "R" (1 on rod side) for TB.

*4 : The instantaneous max. temperature is the temperature when sparks, cutting chips, etc., instantaneously contact the bellows.

[Example of model No.]

SCG-D-LB-40B-100-T2H-D-JI

Model: Tie rod cylinder, double acting/double rod

Ⓐ Mounting	: Axial foot
Ⓑ Bore size	: ø40 mm
Ⓒ Port thread	: Rc thread
Ⓓ Cushion	: With two-sided air cushion
Ⓔ Stroke	:100 mm
Ⓕ Switch model No.	: Proximity T2H switch, lead wire 1 m
Ⓖ Switch quantity	: 2
Ⓗ Option	: With bellows
Ⓘ Accessory	: Rod eye (included product)

How to order switch

● Switch body + mounting bracket set

SCG - T0H - 40

Switch model No. (Item Ⓕ on page 408)
Bore size (Item Ⓑ on page 408)

● Switch body only

SW - T0H

Switch model No. (Item Ⓕ on page 408)

Note: Contact CKD when using an environment-friendly T type switch.

● Switch mounting bracket set

SCG - T - 40

Mounting bracket
Bore size (Item Ⓑ on page 408)

How to order mounting bracket

Bore size (mm) / Mounting bracket	ø32	ø40	ø50	ø63	ø80	ø100
Foot (LB)	SCG-LB-32	SCG-LB-40	SCG-LB-50	SCG-LB-63	SCG-LB-80	SCG-LB-100
Flange (FA) (FB) *1	SCG-FA-32	SCG-FA-40	SCG-FA-50	SCG-FA-63	SCG-FA-80	SCG-FA-100

*1: Specify the flange (FA or FB) with bellows as “SCG-FA-(bore size)-J”.
*2: The foot mounting bracket (LB) is provided as 2 pcs./set.
*3: All mounting brackets are supplied with mounting bolts.

Theoretical thrust table

(Unit: N)

Bore size (mm)	Operating direction	Working pressure MPa										
		0.1	0.15	0.2	0.3	0.4	0.5	0.6	0.7	0.8	0.9	1.0
ø32	Push/Pull	69.1	$1.04x10^2$	$1.38x10^2$	$2.07x10^2$	$2.76x10^2$	$3.46x10^2$	$4.15x10^2$	$4.84x10^2$	$5.53x10^2$	$6.22x10^2$	$6.91x10^2$
ø40	Push/Pull	$1.06x10^2$	$1.58x10^2$	$2.11x10^2$	$3.17x10^2$	$4.22x10^2$	$5.28x10^2$	$6.33x10^2$	$7.39x10^2$	$8.44x10^2$	$9.50x10^2$	$1.06x10^3$
ø50	Push/Pull	$1.65x10^2$	$2.47x10^2$	$3.30x10^2$	$4.95x10^2$	$6.60x10^2$	$8.25x10^2$	$9.90x10^2$	$1.15x10^3$	$1.32x10^3$	$1.48x10^3$	$1.65x10^3$
ø63	Push/Pull	$2.80x10^2$	$4.20x10^2$	$5.61x10^2$	$8.41x10^2$	$1.12x10^3$	$1.40x10^3$	$1.68x10^3$	$1.96x10^3$	$2.24x10^3$	$2.52x10^3$	$2.80x10^3$
ø80	Push/Pull	$4.54x10^2$	$6.80x10^2$	$9.07x10^2$	$1.36x10^3$	$1.81x10^3$	$2.27x10^3$	$2.72x10^3$	$3.17x10^3$	$3.63x10^3$	$4.08x10^3$	$4.54x10^3$
ø100	Push/Pull	$7.15x10^2$	$1.07x10^3$	$1.43x10^3$	$2.14x10^3$	$2.86x10^3$	$3.57x10^3$	$4.29x10^3$	$5.00x10^3$	$5.72x10^3$	$6.43x10^3$	$7.15x10^3$

Internal structure and parts list

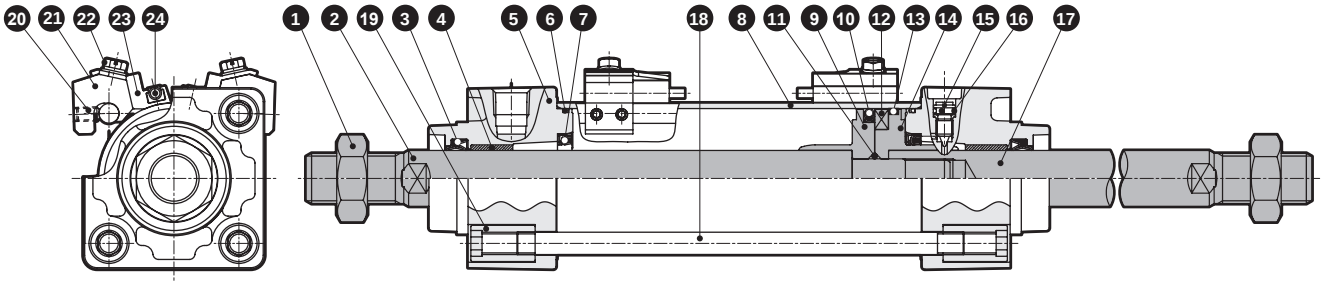

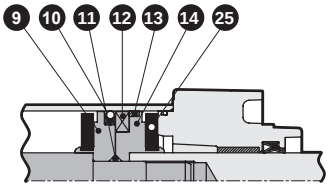

With rubber cushion

No.	Part name	Material	Remarks
1	Rod nut	Steel	Nickel plating
2	Piston rod A	Steel	Industrial chrome plating
3	Rod packing	Nitrile rubber	
4	Bush	Oil-impregnated bearing alloy	
5	Rod cover	Aluminum alloy die-casting	Paint
6	Cylinder gasket	Nitrile rubber	
7	Cushion packing	Nitrile rubber, steel	With air cushion only
8	Cylinder tube	Aluminum alloy	Hard alumite treatment
9	Piston R	ø32, ø40: Aluminum alloy ø50 to ø100: Aluminum alloy die-casting	
10	Piston packing	Nitrile rubber	
11	Piston gasket	Nitrile rubber	
12	Magnet	Plastic	
13	Wear ring	Polyacetal resin	
14	Piston H	ø32, ø40: Aluminum alloy ø50 to ø100: Aluminum alloy die-casting	
15	Cushion needle	Copper alloy	Nickel plating
16	Needle gasket	Nitrile rubber	
17	Piston rod B	Steel	Industrial chrome plating
18	Tie rod	Steel	Zinc chromate treatment
19	Round nut	Steel	Zinc chromate treatment
20	Hexagon socket set screw	Steel	Black finish
21	Switch mounting base	Aluminum alloy	
22	Slotted head hexagon head bolt with captive washer	Stainless steel	
23	Switch holder	Aluminum alloy	
24	Cylinder switch		
25	Cushion rubber	Urethane rubber	With rubber cushion only

Repair parts list

● With air cushion

Bore size (mm)	Kit No.	Repair parts No.
ø32	SCG-D-32BK	3 6 7 10 13 16
ø40	SCG-D-40BK	
ø50	SCG-D-50BK	
ø63	SCG-D-63BK	
ø80	SCG-D-80BK	
ø100	SCG-D-100BK	

Note: Specify the kit No. when placing an order.

● With rubber cushion

Bore size (mm)	Kit No.	Repair parts No.
ø32	SCG-D-32DK	3 6 10 13 16 25
ø40	SCG-D-40DK	
ø50	SCG-D-50DK	
ø63	SCG-D-63DK	
ø80	SCG-D-80DK	
ø100	SCG-D-100DK	

Note: Specify the kit No. when placing an order.

Material of mounting bracket

Mounting	Material	Remarks
LB	Steel	Nickel plating
FA/FB	Steel	Paint
TA/TB/TC	Cast iron	Paint

Note: Mounting bracket will be shipped with the product.
If the product is the trunnion (TA, TB or TC) with bellows and the mounting bracket is LB or FA, it will be attached with the product.

Dimensions

● Basic (00)

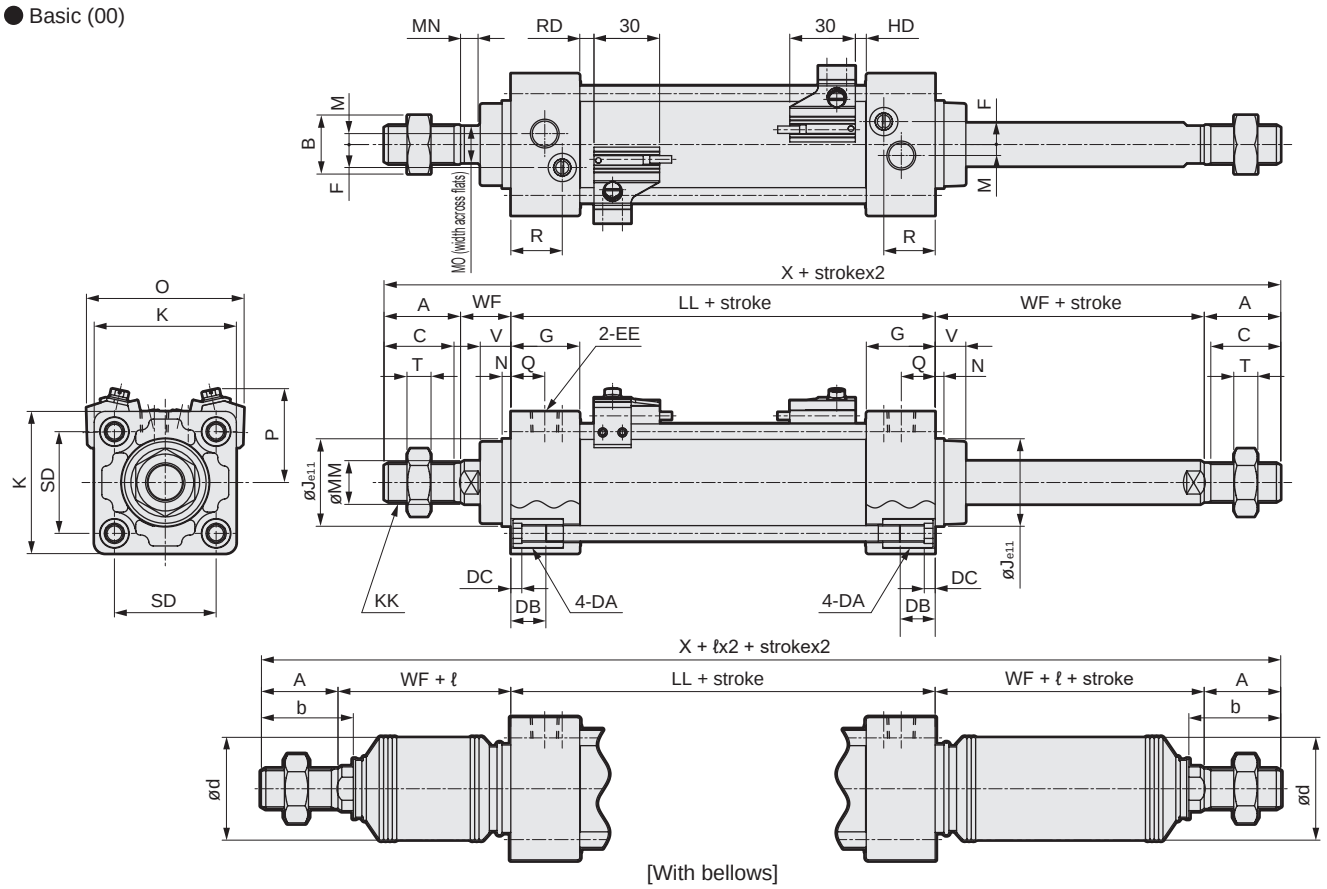

[With bellows]

*1: Dimensions in ( ) are for the rubber cushion.
*2: Refer to page 436 for HD, RD and protruding dimensions of other switches.
*3: Mounting dimensions of each mounting form are the same as SCG (double acting/single rod). Refer to pages 364 to 371.
*4: For the dimensions of the accessories, refer to pages 372 and 373.

Code / Bore size (mm)	Basic (00) Basic dimensions																
	A	B	C	DA	DB	DC	EE	F	G	J	K	KK	*1 LL	M	MM	MN	MO
ø32	22	17	19.5	M6	16	5	Rc1/8	6.5	27	30	46	M10X1.25	84 (90)	4	12	5.5	10
ø40	30	22	27	M6	16	5	Rc1/4	9	27	35	52	M14X1.5	84 (90)	4	16	6	14
ø50	35	27	32	M8	16	5	Rc1/4	10.5	31.5	40	65	M18X1.5	94 (102)	5	20	8	17
ø63	35	27	32	M8	16	5	Rc3/8	12	31.5	45	75	M18X1.5	94 (102)	9	20	8	17
ø80	40	32	37	M10	16	5	Rc3/8	14	38	45	95	M22X1.5	114 (124)	11.5	25	11	22
ø100	40	41	37	M10	16	5	Rc1/2	15	38	55	114	M26X1.5	114 (124)	17	30	13	27

Code / Bore size (mm)									With switch					
	N	Q	R	SD	T	V	WF	*1 X	O	P	T0, T5 ,T2, T3		T2W, T3W	
											RD	HD	RD	HD
ø32	4	13	19	32.5	6	13	25	178 (184)	59	38	5 (8)	5 (8)	7.5 (10.5)	7.5 (10.5)
ø40	4	14	19	38	8	13	21	186 (192)	66	41	5 (8)	5 (8)	7.5 (10.5)	7.5 (10.5)
ø50	4	15.5	23.5	46.5	11	14	23	210 (218)	72	43	6.5 (10.5)	5 (9)	9 (13)	7 (11)
ø63	4	16.5	21.5	56.5	11	14	23	210 (218)	83	48	6.5 (10.5)	5 (9)	9 (13)	7 (11)
ø80	4	19	28	72	13	20	32	258 (268)	104	57	12.5 (17.5)	6 (11)	15 (20)	8 (13)
ø100	4	19	28	89	16	20	32	258 (268)	121	63	12 (17)	6.5 (11.5)	14.5 (19.5)	8.5 (13.5)

Code / Bore size (mm)	With bellows														
	A	b	d	WF	ℓ										
					50 or less	Over 50 to 100	Over 100 to 150	Over 150 to 200	Over 200 to 300	Over 300 to 400	Over 400 to 500	Over 500 to 600	Over 600 to 700	Over 700 to 800	Over 800
ø32	22	31.5	38	25	26	39	51	64	89	114	139	0.35xstroke-37			
ø40	30	35	40	21	30	43	55	68	93	118	143	0.35xstroke-32			
ø50	35	42	47	23	31	44	56	69	94	119	144	169	0.35xstroke-41		
ø63	35	42	47	23	31	44	56	69	94	119	144	169	0.35xstroke-41		
ø80	40	50	53	32	29	42	54	67	92	117	142	167	192	217	0.35xstroke-63
ø100	40	52.5	61	32	29	42	54	67	92	117	142	167	192	217	0.35xstroke-63

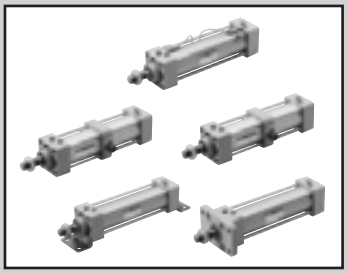

Tie rod cylinder Double acting/rotation-stop

SCG-M Series

● Bore size: ø32/ø40/ø50/ø63

RoHS CAD

Specifications

Item		SCG-M			
Bore size mm		ø32	ø40	ø50	ø63
Actuation		Double acting			
Working fluid		Compressed air			
Max. working pressure MPa		1.0 (≈150 psi, 10 bar)			
Min. working pressure MPa		0.1 (≈15 psi, 1 bar)			0.05 (≈7.3 psi, 0.5 bar)
Proof pressure MPa		1.6 (≈230 psi, 16 bar)			
Ambient temperature °C		-10 (14°F) to 60 (140°F) (no freezing)			
Port size		Rc1/8	Rc1/4		Rc3/8
Stroke tolerance mm	With rubber cushion	$^{+1.4}_{0}$ (to 600)			
	With air cushion	$^{+1.0}_{0}$ (to 360), $^{+1.4}_{0}$ (361 to 600)			
Working piston speed mm/s		50 to 1000 (Operate within the allowable absorbed energy.)			
Cushion		Either air cushion or rubber cushion can be selected			
Effective air cushion lengthmm		8.6	8.6	13.4	13.4
Lubrication		Not required (use turbine oil class 1 ISO VG32 if necessary for lubrication)			
Non-rotating accuracy °		±1			
Allowable absorbed energy J	With rubber cushion	0.5	0.9	1.6	1.6
	With air cushion	2.5	3.7	8.0	14.4

Stroke

Bore size (mm)	Standard stroke (mm)	Max. stroke (mm)	Min. stroke (mm)
ø32	25/50/75/100	600	1
ø40	150/200/250		
ø50	300/350/400		
ø63	450/500		

*1: The custom stroke is available in 1 mm increments.
*2: If the max. stroke is exceeded, product specifications may not be met, depending on operating conditions. Contact CKD in this case.

Min. stroke with T0/T5 switches

Switch quantity	Different surface mounting				Same surface mounting				Center trunnion mounting				Rod side trunnion mounting No position detection at rod side stroke end.	Head side trunnion mounting No position detection at head side stroke end.
Bore size (mm)	1	2	3	4	1	2	3	4	1	2	3	4	1	1
ø32	9	17	34	51	9	48(33)	78(64)	109(94)	94(94)	94(94)	169(155)	169(155)	42	42
ø40	9	18	36	54	9	48(33)	78(64)	109(94)	81(81)	81(81)	164(142)	164(142)	38	38
ø50	9	18	36	54	9	18	36	54	112(112)	112(112)	121(121)	121(121)	51	53
ø63	10	19	38	57	10	19	38	57	85(73)	85(73)	91(91)	91(91)	41	42

*1: The values in ( ) are of T*V (L-shaped lead wire).
*2: When the stroke is 15 mm or less, the two switches could turn ON at the same time. In this case, adjust switch mounting positions to be as far apart as possible.
*3: For the type with bellows, the available stroke is 500 mm for ø32 to ø40 bore size and 600 mm for ø50 to ø63.

Min. stroke with T8 switch

Switch quantity	Different surface mounting				Same surface mounting				Center trunnion mounting				Rod side trunnion mounting No position detection at rod side stroke end.	Head side trunnion mounting No position detection at head side stroke end.
Bore size (mm)	1	2	3	4	1	2	3	4	1	2	3	4	1	1
ø32	9	17	34	51	9	54(31)	84(62)	115(92)	100(100)	100(100)	191(161)	191(161)	45	45
ø40	9	18	36	54	9	54(31)	84(62)	115(92)	87(87)	87(87)	178(148)	178(148)	41	41
ø50	9	18	36	54	9	18	36	54	116(116)	116(116)	121(121)	121(121)	54	55
ø63	10	19	38	57	10	19	38	57	89(77)	89(77)	99(99)	99(99)	44	44

*1: The values in ( ) are of T*V (L-shaped lead wire).
*2: When the stroke is 15 mm or less, the two switches could turn ON at the same time. In this case, adjust switch mounting positions to be as far apart as possible.

Min. stroke with T2/T3 switches

Switch quantity	Different surface mounting				Same surface mounting				Center trunnion mounting				Rod side trunnion mounting No position detection at rod side stroke end.	Head side trunnion mounting No position detection at head side stroke end.
Bore size (mm)	1	2	3	4	1	2	3	4	1	2	3	4	1	1
ø32	5	10	20	30	5	40(33)	70(64)	101(94)	64(55)	64(55)	131(116)	131(116)	27	27
ø40	5	10	20	30	5	40(33)	70(64)	101(94)	69(60)	69(60)	152(121)	152(121)	32	32
ø50	5	10	20	30	5	10	20	30	71(62)	71(62)	71(61)	71(61)	31	32
ø63	6	11	21	32	6	11	21	32	77(68)	77(68)	77(68)	77(68)	37	38

*1: The values in ( ) are of T*V (L-shaped lead wire).
*2: When the stroke is 15 mm or less, the two switches could turn ON at the same time. In this case, adjust switch mounting positions to be as far apart as possible.

Min. stroke with T1/T2Y/T3Y/T2YD/T2W/T3W switches

Switch quantity	Different surface mounting				Same surface mounting				Center trunnion mounting				Rod side trunnion mounting No position detection at rod side stroke end.	Head side trunnion mounting No position detection at head side stroke end.
Bore size (mm)	1	2	3	4	1	2	3	4	1	2	3	4	1	1
ø32	6	11	22	33	6	62(49)	92(80)	123(110)	86(61)	86(61)	177(122)	177(122)	38	38
ø40	6	11	22	33	6	62(49)	92(80)	123(110)	91(66)	91(66)	182(127)	182(127)	43	43
ø50	6	12	24	36	6	12	24	36	93(68)	93(68)	93(68)	93(68)	42	43
ø63	6	12	24	36	6	12	24	36	99(74)	99(74)	99(74)	99(74)	48	49

*1: The values in ( ) are of T*V (L-shaped lead wire). T2YD does not have an L-shaped lead wire (V).
*2: When the stroke is 15 mm or less, the two switches could turn ON at the same time. In this case, adjust switch mounting positions to be as far apart as possible.

Switch specifications

● 1-color/2-color LED/for AC magnetic field proof

Item	2-wire proximity	2-wire proximity			3-wire proximity				2-wire reed							2-wire proximity
	T1H/ T1V	T2H/T2V/ T2JH/T2JV	T2YH/ T2YV	T2WH/ T2WV	T3H/ T3V	T3PH/ T3PV	T3YH/ T3YV	T3WH/ T3WV	T0H/T0V		T5H/T5V		T8H/T8V			T2YD (*4) T2YDT
Applications	Programming controller relay, compact solenoid valve	Dedicated for programmable controller			For programmable controller, relay				For programmable controller, relay		For programmable controller, relay (no lamp), serial		For programmable controller, relay			Dedicated for programmable controller
Output method	-				NPN output	PNP output	NPN output	NPN output	-							
Pwr. supp. V.	-				10 to 28 VDC				-							
Load voltage	85 to 265 VAC	10 to 30 VDC		24 VDC ±10%	30 VDC or less				12/24 VDC	110 VAC	5/12/24 VDC	110 VAC	12/24 VDC	110 VAC	220 VAC	24 VDC ±10%
Load current	5 to 100 mA	5 to 20 mA (*3)			100 mA or less		50 mA or less		5 to 50 mA	7 to 20 mA	50 mA or less	20 mA or less	5 to 50 mA	7 to 20 mA	7 to 10 mA	5 to 20 mA
Indicator	LED (Lit when ON)	LED (Lit when ON)	Red/green LED (Lit when ON)	Red/green LED (Lit when ON)	LED (Lit when ON)	Yellow LED (Lit when ON)	Red/green LED (Lit when ON)	Red/green LED (Lit when ON)	LED (Lit when ON)		No indicator lamp		LED (Lit when ON)			Red/green LED (Lit when ON)
Leakage current	≤ 1 mA at 100 VAC, ≤ 2 mA at 200 VAC	1 mA or less			10 μA or less				0 mA							1 mA or less
Weight g	1 m:33 3 m:87 5 m:142	1 m:18 3 m:49 5 m:80	1 m:33 3 m:87 5 m:142	1 m:18 3 m:49 5 m:80	1 m:18 3 m:49 5 m:80		1 m:33 3 m:87 5 m:142	1 m:18 3 m:49 5 m:80	1 m:18 3 m:49 5 m:80				1 m:33 3 m:87 5 m:142			1 m:61 3 m:166 5 m:272

*1: Refer to Ending Page 1 for detailed switch specifications and dimensions.
*2: Switches other than the above models, such as switches with connectors, are also available. Refer to Ending Page 1.
*3 : Max. load current: 20 mA at 25°C. The current is lower than 20 mA if the operating ambient temperature around the switch is higher than 25˚C. (5 to 10 mA at 60°C)
*4 : Switch for AC magnetic field (T2YD/T2YDT) cannot be used in DC magnetic field.

Weight table

(Unit: kg)

Bore size (mm)	Product weight for 0 mm stroke						Stroke:Added weight/50 mm	Switch weight (per 1 pc)	Switch mounting bracket	Mounting bracket weight	
	Basic (00)	Foot (LB)	Flange (FA, FB)	Eye bracket (CA)	Clevis bracket (CB)	Trunnion (TC)				I	Y
ø32	0.50	0.61	0.58	0.65	0.68	0.67	0.12	Refer to the weight in the switch specifications.	0.024	0.07	0.10
ø40	0.66	0.80	0.77	0.85	0.85	1.00	0.17		0.024	0.07	0.13
ø50	1.13	1.29	1.31	1.54	1.54	1.61	0.23		0.022	0.20	0.30
ø63	1.39	1.73	1.68	1.95	1.96	2.27	0.25		0.022	0.20	0.30

SCP*3
CMK2
CMA2
SCM
SCG
SCA2
SCS2
CKV2
CAV2/COVP/N2
SSD2
SSG
SSD
CAT
MDC2
MVC
SMG
MSD/MSDG
FC*
STK
SRL3
SRG3
SRM3
SRT3
MRL2
MRG2
SM-25
ShkAbs
FJ
FK
Spd Contr
Ending

How to order

No switch (built-in magnet for switch)

SCG-M - LB - 40 ◯ B - 100 ——— J I

With switch (built-in magnet for switch)

SCG-M - LB - 40 ◯ B - 100 - T2H - R - J I

Model No.

Ⓐ Mounting *1

Ⓑ Bore size

Ⓒ Port thread

Ⓓ Cushion

Ⓔ Stroke

Ⓕ Switch model No.

Ⓖ Switch quantity *3

Ⓗ Option

Ⓘ Accessory *4

Code	Description
Ⓐ Mounting	
00	Basic
LB	Axial foot
FA	Rod side flange
FB	Head side flange
CA	Eye bracket
CB	Clevis bracket (pin and split pin included)
TA	Rod side trunnion
TB	Head side trunnion
TC	Intermediate trunnion
Ⓑ Bore size (mm)	
32	ø32
40	ø40
50	ø50
63	ø63
Ⓒ Port thread	
Blank	Rc thread
N	NPT thread (made-to-order product)
G	G thread (made-to-order product)
Ⓓ Cushion	
B	Two-sided air cushion (basic)
D	Two-sided rubber cushion
Note: The rubber cushion has a longer total length than the air cushion.	

Ⓔ Stroke (mm)

Bore size	Stroke *2	Custom stroke
ø32	1 to 600	In 1 mm increments
ø40		
ø50		
ø63		

Ⓕ Switch model No.

Axial lead wire	Radial lead wire	Contact	Voltage AC	Voltage DC	Indicator	Lead wire
TOH*	T0V*	Reed	●	●	1-color LED	2-wire
T5H*	T5V*	Reed	●	●	No indicator lamp	2-wire
T8H*	T8V*	Reed	●	●	1-color LED	2-wire
T1H*	T1V*	Proximity	●		1-color LED	2-wire
T2H*	T2V*	Proximity		●	1-color LED	2-wire
T3H*	T3V*	Proximity		●	1-color LED	3-wire
T3PH*	T3PV*	Proximity		●	1-color LED	3-wire
T2WH*	T2WV*	Proximity		●	2-color LED	2-wire
T2YH*	T2YV*	Proximity		●	2-color LED	2-wire
T3WH*	T3WV*	Proximity		●	2-color LED	3-wire
T3YH*	T3YV*	Proximity		●	2-color LED	3-wire
T2YD*	-	Proximity		●	2-color LED for AC magnetic field	2-wire
T2YDT*	-	Proximity		●	2-color LED for AC magnetic field	2-wire
T2JH*	T2JV*	Proximity		●	1-color LED off-delay	2-wire

*** Lead wire length**

Blank	1 m (standard)
3	3 m (option)
5	5 m (option)

Ⓖ Switch quantity

R	1 on rod side
H	1 on head side
D	2
T	3

Ⓗ Option

		Max. ambient temp.	Instantaneous ambient temp
J	Bellows	100°C	200°C

Ⓘ Accessory

I	Rod eye
Y	Rod clevis (pin and split pin included)
B1	Eye bracket
B2	Clevis bracket (pin and split pin included)
B3	Eye bracket
B4	Trunnion No. 2 bracket (2 pcs./set)

⚠ Precautions for model No. selection

*1 : Mounting bracket will be shipped with the product. (If the product is the trunnion (TA, TB or TC) with bellows and the mounting bracket is LB or FA, it will be included with the product.)

*2 : Refer to pages 412 and 413 for the min. stroke with switch.

*3 : When selecting TA or TB as mounting, the number of switches is limited to "H" (1 on head side) for TA, and "R" (1 on rod side) for TB.

*4 : "I" and "Y" cannot be selected together.

[Example of model No.]

SCG-M-LB-40B-100-T2H-D-JI

Model No.: Tie rod cylinder, double acting/rotation-stop

Ⓐ Mounting	: Axial foot
Ⓑ Bore size	: ø40 mm
Ⓒ Port thread	: Rc thread
Ⓓ Cushion	: With air cushion
Ⓔ Stroke	:100 mm
Ⓕ Switch model No.	: Proximity T2H switch, lead wire 1 m
Ⓖ Switch quantity	: 2
Ⓗ Option	: With bellows
Ⓘ Accessory	: Rod eye (included product)

How to order switch

● Switch body + mounting bracket set

SCG - T0H - 40

Switch model No. (Item Ⓕ on page 414)
Bore size (Item Ⓑ on page 414)

● Switch body only

SW - T0H

Switch model No. (Item Ⓕ on page 414)

Note: Contact CKD when using an environment-friendly T-switch.

● Switch mounting bracket set

SCG - T - 40

Mounting bracket
Bore size (Item Ⓑ on page 414)

How to order mounting bracket

Bore size (mm) / Mounting bracket	ø32	ø40	ø50	ø63
Foot (LB)	SCG-LB-32	SCG-LB-40	SCG-LB-50	SCG-LB-63
Flange (FA) (FB) *1	SCG-FA-32	SCG-FA-40	SCG-FA-50	SCG-FA-63
Eye bracket (CA)	SCG-CA-32	SCG-CA-40	SCG-CA-50	SCG-CA-63
Clevis bracket (CB)	SCG-CB-32	SCG-CB-40	SCG-CB-50	SCG-CB-63

*1: Specify the flange (FA) with bellows as “SCG-FA-(bore size)-J”.
*2: The foot mounting bracket (LB) is provided as 2 pcs./set.
*3: All mounting brackets are supplied with mounting bolts.

Theoretical thrust table

(Unit: N)

Bore size (mm)	Operating direction	Working pressure MPa											
		0.05	0.1	0.15	0.2	0.3	0.4	0.5	0.6	0.7	0.8	0.9	1.0
ø32	Push	—	80.4	1.21×10^2	1.61×10^2	2.41×10^2	3.22×10^2	4.02×10^2	4.83×10^2	5.63×10^2	6.43×10^2	7.24×10^2	8.04×10^2
	Pull	—	69.1	1.04×10^2	1.38×10^2	2.07×10^2	2.76×10^2	3.46×10^2	4.15×10^2	4.84×10^2	5.53×10^2	6.22×10^2	6.91×10^2
ø40	Push	—	1.26×10^2	1.88×10^2	2.51×10^2	3.77×10^2	5.03×10^2	6.28×10^2	7.54×10^2	8.80×10^2	1.01×10^3	1.13×10^3	1.26×10^3
	Pull	—	1.06×10^2	1.58×10^2	2.11×10^2	3.17×10^2	4.22×10^2	5.28×10^2	6.33×10^2	7.39×10^2	8.44×10^2	9.50×10^2	1.06×10^3
ø50	Push	—	1.96×10^2	2.95×10^2	3.93×10^2	5.89×10^2	7.85×10^2	9.82×10^2	1.18×10^3	1.37×10^3	1.57×10^3	1.77×10^3	1.96×10^3
	Pull	—	1.65×10^2	2.47×10^2	3.30×10^2	4.95×10^2	6.60×10^2	8.25×10^2	9.90×10^2	1.15×10^3	1.32×10^3	1.48×10^3	1.65×10^3
ø63	Push	1.56×10^2	3.12×10^2	4.68×10^2	6.23×10^2	9.35×10^2	1.25×10^3	1.56×10^3	1.87×10^3	2.18×10^3	2.49×10^3	2.81×10^3	3.12×10^3
	Pull	1.40×10^2	2.80×10^2	4.20×10^2	5.61×10^2	8.41×10^2	1.12×10^3	1.40×10^3	1.68×10^3	1.96×10^3	2.24×10^3	2.52×10^3	2.80×10^3

Internal structure

Same as standard. Refer to page 362.
Note that the following parts are different in material.

No.	Part name	Material	Remarks
2	Piston rod	ø32: Stainless steel, copper	
		ø40 to 63: Steel	Industrial chrome plating

Repair parts list

● With air cushion

Bore size (mm)	Kit No.	Repair parts No.
ø32	SCG-M-32BK	3 6 7 10 13 16
ø40	SCG-M-40BK	
ø50	SCG-M-50BK	
ø63	SCG-M-63BK	

Note: Specify the kit No. when placing an order.

● With rubber cushion

Bore size (mm)	Kit No.	Repair parts No.
ø32	SCG-M-32DK	3 6 10 13 16 23
ø40	SCG-M-40DK	
ø50	SCG-M-50DK	
ø63	SCG-M-63DK	

Note: Specify the kit No. when placing an order.

Material of mounting bracket

Mounting	Material	Remarks
LB	Steel	Nickel plating
FA/FB	Steel	Paint
CA/CB	Cast iron	Paint
TA/TB/TC	Cast iron	Paint

Note: Mounting bracket will be shipped with the product.
If the product is the trunnion (TA, TB or TC) with bellows and the mounting is LB or FA, it will be included with the product.

Dimensions

● Basic (00)

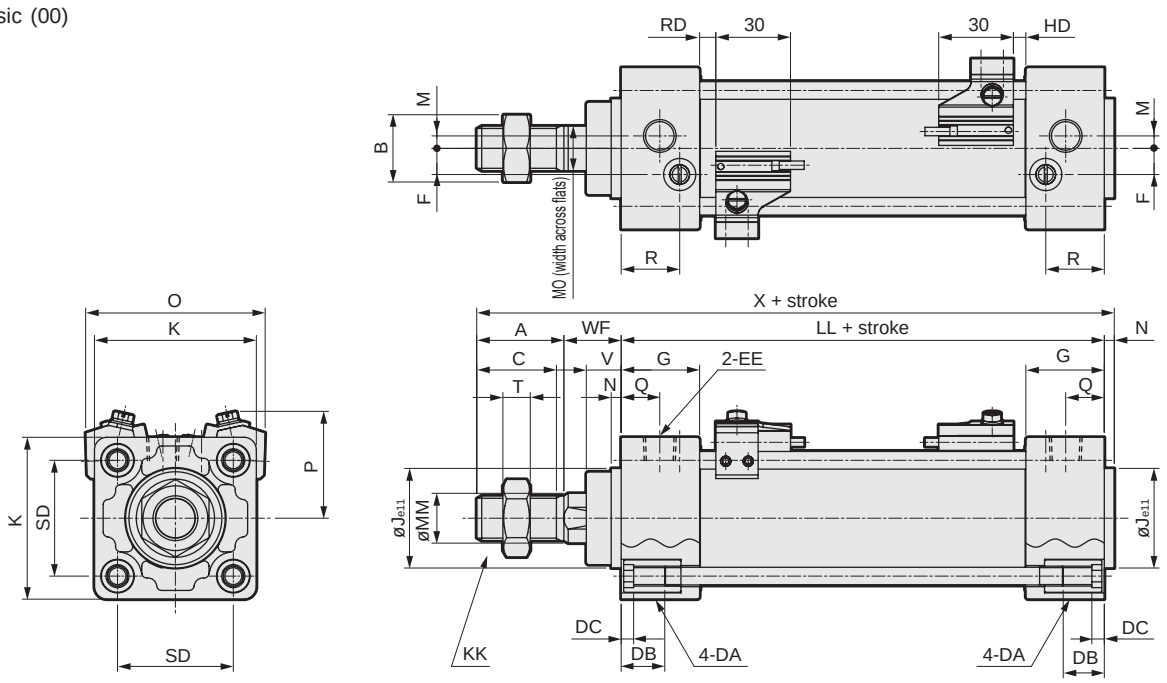

[With bellows]

*1: Dimensions in ( ) are for the rubber cushion.
*2: Refer to page 436 for HD, RD and protruding dimensions of other switches.
*3: Mounting dimensions of each mounting form are the same as SCG (double acting/single rod). Refer to pages 364 to 371.
*4: For the dimensions of the accessories, refer to pages 372 and 373.

Code / Bore size (mm)	Basic (00) Basic dimensions															
	A	B	C	DA	DB	DC	EE	F	G	J	K	KK	*1 LL	M	MM	M0
ø32	22	17	19.5	M6	16	5	Rc1/8	6.5	27	30	46	M10X1.25	84 (90)	4	12	10
ø40	30	22	27	M6	16	5	Rc1/4	9	27	35	52	M14X1.5	84 (90)	4	16	14
ø50	35	27	32	M8	16	5	Rc1/4	10.5	31.5	40	65	M18X1.5	94 (102)	5	20	18
ø63	35	27	32	M8	16	5	Rc3/8	12	31.5	45	75	M18X1.5	94 (102)	9	20	18

Code / Bore size (mm)									With switch					
	N	Q	R	SD	T	V	WF	*1 X	O	P	T0, T5 ,T2, T3		T2W, T3W	
											RD	HD	RD	HD
ø32	4	13	19	32.5	6	13	25	135 (141)	59	38	5 (8)	5 (8)	7.5 (10.5)	7.5 (10.5)
ø40	4	14	19	38	8	13	21	139 (145)	66	41	5 (8)	5 (8)	7.5 (10.5)	7.5 (10.5)
ø50	4	15.5	23.5	46.5	11	14	23	156 (164)	72	43	6.5 (10.5)	5 (9)	9 (13)	7 (11)
ø63	4	16.5	21.5	56.5	11	14	23	156 (164)	83	48	6.5 (10.5)	5 (9)	9 (13)	7 (11)

Code / Bore size (mm)	With bellows											
	A	b	d	WF	L							
					50 or less	Over 50 to 100	Over 100 to 150	Over 150 to 200	Over 200 to 300	Over 300 to 400	Over 400 to 500	Over 500 to 600
ø32	22	31.5	38	25	26	39	51	64	89	114	139	0.35 X stroke-37
ø40	30	35	40	21	30	43	55	68	93	118	143	0.35 X stroke-32
ø50	35	42	47	23	31	44	56	69	94	119	144	169
ø63	35	42	47	23	31	44	56	69	94	119	144	169

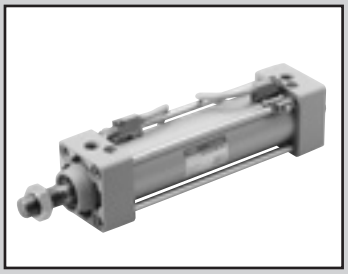

Tie rod cylinder Double acting/rubber scraper

SCG-G Series

● Bore size: ø32/ø40/ø50/ø63/ø80/ø100

JIS symbol

RoHS CAD

Specifications

Item		SCG-G					
Bore size	mm	ø32	ø40	ø50	ø63	ø80	ø100
Actuation		Double acting					
Working fluid		Compressed air					
Max. working pressure	MPa	1.0 (≈150 psi, 10 bar)					
Min. working pressure	MPa	0.1 (≈15 psi, 1 bar)					
Proof pressure	MPa	1.6 (≈230 psi, 16 bar)					
Ambient temperature	°C	-10 (14°F) to 60 (140°F) (no freezing)					
Port size		Rc1/8	Rc1/4		Rc3/8		Rc1/2
Stroke tolerance mm	With rubber cushion	$^{+1.4}_{0}$ (to 1000), $^{+1.8}_{0}$ (1001 to 1500)					
	With air cushion	$^{+1.0}_{0}$ (to 360), $^{+1.4}_{0}$ (361 to 1000), $^{+1.8}_{0}$ (1001 to 1500)					
Working piston speed	mm/s	50 to 1000 (Operate within the allowable absorbed energy.)					
Cushion		Either air cushion or rubber cushion can be selected					
Effective air cushion length	mm	8.6	8.6	13.4	13.4	15.4	15.4
Lubrication		Not required (use turbine oil class 1 ISO VG32 if necessary for lubrication)					
Allowable absorbed energy J	With rubber cushion	0.5	0.9	1.6	1.6	3.3	5.8
	With air cushion	2.5	3.7	8.0	14.4	25.4	45.6

Stroke

Bore size (mm)	Standard stroke (mm)	Max. stroke (mm)	Available stroke (mm)	Min. stroke (mm)
ø32	25/50/75/100 150/200/250 300/350/400 450/500	600	700	1
ø40			800	
ø50			1200	
ø63			1200	
ø80		700	1400	
ø100		800	1500	

*1: The custom stroke is available in 1 mm increments.
*2: If the max. stroke is exceeded, product specifications may not be met, depending on operating conditions. Contact CKD in this case.

Min. stroke with T0/T5 switches

Switch quantity	Different surface mounting				Same surface mounting				Center trunnion mounting				Rod side trunnion mounting No position detection at rod side stroke end.	Head side trunnion mounting No position detection at head side stroke end.
Bore size (mm)	1	2	3	4	1	2	3	4	1	2	3	4	1	1
ø32	9	17	34	51	9	48 (33)	78 (64)	109 (94)	94 (94)	94 (94)	169 (155)	169 (155)	42	42
ø40	9	18	36	54	9	48 (33)	78 (64)	109 (94)	81 (81)	81 (81)	164 (142)	164 (142)	38	38
ø50	9	18	36	54	9	18	36	54	112 (112)	112 (112)	121 (121)	121 (121)	51	53
ø63	10	19	38	57	10	19	38	57	85 (73)	85 (73)	91 (91)	91 (91)	41	42
ø80	10	20	39	59	10	20	39	59	96 (79)	96 (79)	99 (99)	99 (99)	41	47
ø100	10	20	40	60	10	20	40	60	101 (84)	101 (84)	105 (105)	105 (105)	47	53

*1: The values in ( ) are of T*V (L-shaped lead wire).
*2: When the stroke is 15 mm or less, the two switches could turn ON at the same time. In this case, adjust switch mounting positions to be as far apart as possible.

Min. stroke with T8 switch

Switch quantity	Different surface mounting				Same surface mounting				Center trunnion mounting				Rod side trunnion mounting No position detection at rod side stroke end.	Head side trunnion mounting No position detection at head side stroke end.
Bore size (mm)	1	2	3	4	1	2	3	4	1	2	3	4	1	1
ø32	9	17	34	51	9	54 (31)	84 (62)	115 (92)	100 (100)	100 (100)	191 (161)	191 (161)	45	45
ø40	9	18	36	54	9	54 (31)	84 (62)	115 (92)	87 (87)	87 (87)	178 (148)	178 (148)	41	41
ø50	9	18	36	54	9	18	36	54	116 (116)	116 (116)	121 (121)	121 (121)	54	55
ø63	10	19	38	57	10	19	38	57	89 (77)	89 (77)	99 (99)	99 (99)	44	44
ø80	10	20	39	59	10	20	39	59	100 (75)	100 (75)	111 (111)	111 (111)	43	49
ø100	10	20	40	60	10	20	40	60	105 (80)	105 (80)	117 (117)	117 (117)	49	55

*1: The values in ( ) are of T*V (L-shaped lead wire).
*2: When the stroke is 15 mm or less, the two switches could turn ON at the same time. In this case, adjust switch mounting positions to be as far apart as possible.

Min. stroke with T2/T3 switches

Switch quantity	Different surface mounting				Same surface mounting				Center trunnion mounting				Rod side trunnion mounting No position detection at rod side stroke end.	Head side trunnion mounting No position detection at head side stroke end.
Bore size (mm)	1	2	3	4	1	2	3	4	1	2	3	4	1	1
ø32	5	10	20	30	5	40 (33)	70 (64)	101 (94)	64 (55)	64 (55)	131 (116)	131 (116)	27	27
ø40	5	10	20	30	5	40 (33)	70 (64)	101 (94)	69 (60)	69 (60)	152 (121)	152 (121)	32	32
ø50	5	10	20	30	5	10	20	30	71 (62)	71 (62)	71 (61)	71 (61)	31	32
ø63	6	11	21	32	6	11	21	32	77 (68)	77 (68)	77 (68)	77 (68)	37	38
ø80	6	11	22	33	6	11	22	33	88 (79)	88 (79)	88 (80)	88 (80)	37	43
ø100	6	11	22	33	6	11	22	33	93 (84)	93 (84)	93 (85)	93 (85)	43	49

*1: The values in ( ) are of T*V (L-shaped lead wire).
*2: When the stroke is 15 mm or less, the two switches could turn ON at the same time. In this case, adjust switch mounting positions to be as far apart as possible.

Min. stroke with T1/T2Y/T3Y/T2YD/T2W/T3W switches

Switch quantity	Different surface mounting				Same surface mounting				Center trunnion mounting				Rod side trunnion mounting No position detection at rod side stroke end.	Head side trunnion mounting No position detection at head side stroke end.
Bore size (mm)	1	2	3	4	1	2	3	4	1	2	3	4	1	1
ø32	6	11	22	33	6	62 (49)	92 (80)	123 (110)	86 (61)	86 (61)	177 (122)	177 (122)	38	38
ø40	6	11	22	33	6	62 (49)	92 (80)	123 (110)	91 (66)	91 (66)	182 (127)	182 (127)	43	43
ø50	6	12	24	36	6	12	24	36	93 (68)	93 (68)	93 (68)	93 (68)	42	43
ø63	6	12	24	36	6	12	24	36	99 (74)	99 (74)	99 (74)	99 (74)	48	49
ø80	7	13	25	38	7	13	25	38	110 (85)	110 (85)	110 (86)	110 (86)	48	54
ø100	7	13	26	39	7	13	26	39	115 (90)	115 (90)	115 (92)	115 (92)	54	60

*1: The values in ( ) are of T*V (L-shaped lead wire). T2YD does not have an L-shaped lead wire (V).
*2: When the stroke is 15 mm or less, the two switches could turn ON at the same time. In this case, adjust switch mounting positions to be as far apart as possible.

Switch specifications

● 1-color/2-color LED/for AC magnetic field proof

Item	2-wire proximity	2-wire proximity			3-wire proximity				2-wire reed							2-wire proximity
	T1H/ T1V	T2H/T2V/ T2JH/T2JV	T2YH/ T2YV	T2WH/ T2WV	T3H/ T3V	T3PH/ T3PV	T3YH/ T3YV	T3WH/ T3WV	T0H/T0V		T5H/T5V		T8H/T8V			T2YD (*4) T2YDT
Applications	Programming controller relay, compact solenoid valve	Dedicated for programmable controller			For programmable controller, relay				For programmable controller, relay		For programmable controller, relay (no lamp), serial		For programmable controller, relay			Dedicated for programmable controller
Output method	-				NPN output	PNP output	NPN output	NPN output	-							
Pwr. supp. V.	-				10 to 28 VDC				-							
Load voltage	85 to 265 VAC	10 to 30 VDC		24 VDC ±10%	30 VDC or less				12/24 VDC	110 VAC	5/12/24 VDC	110 VAC	12/24 VDC	110 VAC	220 VAC	24 VDC ±10%
Load current	5 to 100 mA	5 to 20 mA (*3)			100 mA or less		50 mA or less		5 to 50 mA	7 to 20 mA	50 mA or less	20 mA or less	5 to 50 mA	7 to 20 mA	7 to 10 mA	5 to 20 mA
Indicator	LED (Lit when ON)	LED (Lit when ON)	Red/green LED (Lit when ON)	Red/green LED (Lit when ON)	LED (Lit when ON)	Yellow LED (Lit when ON)	Red/green LED (Lit when ON)	Red/green LED (Lit when ON)	LED (Lit when ON)		No indicator lamp		LED (Lit when ON)			Red/green LED (Lit when ON)
Leakage current	≤ 1 mA at 100 VAC, ≤ 2 mA at 200 VAC	1 mA or less			10 μA or less				0 mA							1 mA or less
Weight g	1 m:33 3 m:87 5 m:142	1 m:18 3 m:49 5 m:80	1 m:33 3 m:87 5 m:142	1 m:18 3 m:49 5 m:80	1 m:18 3 m:49 5 m:80		1 m:33 3 m:87 5 m:142	1 m:18 3 m:49 5 m:80	1 m:18 3 m:49 5 m:80				1 m:33 3 m:87 5 m:142			1 m:61 3 m:166 5 m:272

*1: Refer to Ending Page 1 for detailed switch specifications and dimensions.
*2: Switches other than the above models, such as switches with connectors, are also available. Refer to Ending Page 1.
*3: Max. load current: 20 mA at 25°C. The current is lower than 20 mA if the operating ambient temperature around the switch is higher than 25°C. (5 to 10 mA at 60°C)
*4: Switch for AC magnetic field (T2YD/T2YDT) cannot be used in DC magnetic field.

Weight table

(Unit: kg)

Bore size (mm)	Product weight for 0 mm stroke						Stroke:Added weight/50 mm	Switch weight (per 1 pc)	Switch bracket	Accessory weight	
	Basic (00)	Foot (LB)	Flange (FA, FB)	Eye bracket (CA)	Clevis bracket (CB)	Trunnion (TA/TB/TC)				I	Y
ø32	0.51	0.62	0.73	0.66	0.69	0.68	0.12	Refer to the weight in the switch specifications.	0.024	0.07	0.10
ø40	0.68	0.82	0.96	0.86	0.86	1.02	0.17		0.024	0.07	0.13
ø50	1.16	1.32	1.64	1.56	1.57	1.64	0.23		0.022	0.20	0.30
ø63	1.42	1.76	2.18	1.97	1.99	2.29	0.25		0.022	0.20	0.30
ø80	2.69	3.12	4.26	3.96	3.96	4.18	0.40		0.026	0.52	0.94
ø100	3.80	4.66	6.12	5.52	5.55	6.37	0.51		0.024	0.48	0.92

How to order

No switch (built-in magnet for switch)

SCG-G - LB - 40 ◯ B - 100 ——— M I

With switch (built-in magnet for switch)

SCG-G - LB - 40 ◯ B - 100 - T2H - R - M I

Model No.

Ⓐ Mounting *1

Ⓑ Bore size

Ⓒ Port thread

Ⓓ Cushion

Ⓔ Stroke

Ⓕ Switch model No.

Ⓖ Switch quantity *3

Ⓗ Option

Ⓘ Accessory *4

Code	Description
Ⓐ Mounting	
00	Basic
LB	Axial foot
FA	Rod side flange
FB	Head side flange
CA	Eye bracket
CB	Clevis bracket (pin and split pin included)
TA	Rod side trunnion
TB	Head side trunnion
TC	Intermediate trunnion
Ⓑ Bore size (mm)	
32	ø32
40	ø40
50	ø50
63	ø63
80	ø80
100	ø100
Ⓒ Port thread	
Blank	Rc thread
N	NPT thread (made-to-order product)
G	G thread (made-to-order product)
Ⓓ Cushion	
B	Two-sided air cushion (basic)
D	Two-sided rubber cushion
Note: The rubber cushion has a longer total length than the air cushion.	

Ⓔ Stroke (mm)

Bore size	Stroke *2	Available stroke	Custom stroke
ø32	1 to 600	700	In 1 mm increments
ø40		800	
ø50		1200	
ø63			
ø80	1 to 700	1400	
ø100	1 to 800	1500	

Ⓕ Switch model No.

Axial lead wire	Radial lead wire	Contact	Voltage AC	Voltage DC	Indicator	Lead wire
TOH*	T0V*	Reed	●	●	1-color LED	2-wire
T5H*	T5V*		●	●	No indicator lamp	
T8H*	T8V*		●	●	1-color LED	
T1H*	T1V*	Proximity	●		1-color LED	2-wire
T2H*	T2V*			●		
T3H*	T3V*			●		3-wire
T3PH*	T3PV*			●	1-color LED	3-wire
T2WH*	T2WV*			●	2-color LED	2-wire
T2YH*	T2YV*			●		
T3WH*	T3WV*			●		3-wire
T3YH*	T3YV*			●		
T2YD*	-			●	2-color LED for AC magnetic field	2-wire
T2YDT*	-			●		
T2JH*	T2JV*			●	1-color LED off-delay	2-wire

* Lead wire length	
Blank	1 m (standard)
3	3 m (option)
5	5 m (option)

Ⓖ Switch quantity	
R	1 on rod side
H	1 on head side
D	2
T	3

Ⓗ Option	
M	Piston rod material (stainless steel)
P6	Copper and PTFE free

Ⓘ Accessory	
I	Rod eye
Y	Rod clevis (pin and split pin included)
B1	Eye bracket
B2	Clevis bracket (pin and split pin included)
B3	Eye bracket
B4	Trunnion No. 2 bracket (2 pcs./set)

⚠ Precautions for model No. selection

*1 : Mounting bracket will be shipped with the product. (Trunnion are assembled at shipment.)

*2 : Refer to pages 418 and 419 for the min. stroke with switch.

*3 : When selecting TA or TB as mounting, the number of switches is limited to "H" (1 on head side) for TA, and "R" (1 on rod side) for TB.

*4 : "I" and "Y" cannot be selected together.

[Example of model No.]

SCG-G-LB-40B-100-T2H-D-MI

Model: Tie rod cylinder, double acting/rubber scraper

Ⓐ Mounting	: Axial foot
Ⓑ Bore size	: ø40 mm
Ⓒ Port thread	: Rc thread
Ⓓ Cushion	: With two-sided air cushion
Ⓔ Stroke	: 100 mm
Ⓕ Switch model No.	: Proximity T2H switch, lead wire 1 m
Ⓖ Switch quantity	: 2
Ⓗ Option	: Piston rod material (stainless steel)
Ⓘ Accessory	: Rod eye (included product)

How to order switch

● Switch body + mounting bracket set

SCG - T0H - 40

Switch model No. (Item Ⓕ on page 420)
Bore size (Item Ⓑ on page 420)

● Switch body only

SW - T0H

Switch model No. (Item Ⓕ on page 420)

Note: Contact CKD when using an environment-friendly T-switch.

● Switch mounting bracket set

SCG - T - 40

Mounting bracket
Bore size (Item Ⓑ on page 420)

How to order mounting bracket

Bore size (mm) / Mounting bracket	ø32	ø40	ø50	ø63	ø80	ø100
Foot (LB)	SCG-LB-32	SCG-LB-40	SCG-LB-50	SCG-LB-63	SCG-LB-80	SCG-LB-100
Flange (FA) (FB)	SCG-FA-32	SCG-FA-40	SCG-FA-50	SCG-FA-63	SCG-FA-80	SCG-FA-100
Eye bracket (CA)	SCG-CA-32	SCG-CA-40	SCG-CA-50	SCG-CA-63	SCG-CA-80	SCG-CA-100
Clevis bracket (CB)	SCG-CB-32	SCG-CB-40	SCG-CB-50	SCG-CB-63	SCG-CB-80	SCG-CB-100

*1: The foot mounting bracket (LB) is provided as 2 pcs./set.
*2: All mounting brackets are supplied with mounting bolts.

Theoretical thrust table

(Unit: N)

Bore size (mm)	Operating direction	Working pressure MPa										
		0.1	0.15	0.2	0.3	0.4	0.5	0.6	0.7	0.8	0.9	1.0
ø32	Push	80.4	$1.21x10^2$	$1.61x10^2$	$2.41x10^2$	$3.22x10^2$	$4.02x10^2$	$4.83x10^2$	$5.63x10^2$	$6.43x10^2$	$7.24x10^2$	$8.04x10^2$
	Pull	69.1	$1.04x10^2$	$1.38x10^2$	$2.07x10^2$	$2.76x10^2$	$3.46x10^2$	$4.15x10^2$	$4.84x10^2$	$5.53x10^2$	$6.22x10^2$	$6.91x10^2$
ø40	Push	$1.26x10^2$	$1.88x10^2$	$2.51x10^2$	$3.77x10^2$	$5.03x10^2$	$6.28x10^2$	$7.54x10^2$	$8.80x10^2$	$1.01x10^3$	$1.13x10^3$	$1.26x10^3$
	Pull	$1.06x10^2$	$1.58x10^2$	$2.11x10^2$	$3.17x10^2$	$4.22x10^2$	$5.28x10^2$	$6.33x10^2$	$7.39x10^2$	$8.44x10^2$	$9.50x10^2$	$1.06x10^3$
ø50	Push	$1.96x10^2$	$2.95x10^2$	$3.93x10^2$	$5.89x10^2$	$7.85x10^2$	$9.82x10^2$	$1.18x10^3$	$1.37x10^3$	$1.57x10^3$	$1.77x10^3$	$1.96x10^3$
	Pull	$1.65x10^2$	$2.47x10^2$	$3.30x10^2$	$4.95x10^2$	$6.60x10^2$	$8.25x10^2$	$9.90x10^2$	$1.15x10^3$	$1.32x10^3$	$1.48x10^3$	$1.65x10^3$
ø63	Push	$3.12x10^2$	$4.68x10^2$	$6.23x10^2$	$9.35x10^2$	$1.25x10^3$	$1.56x10^3$	$1.87x10^3$	$2.18x10^3$	$2.49x10^3$	$2.81x10^3$	$3.12x10^3$
	Pull	$2.80x10^2$	$4.20x10^2$	$5.61x10^2$	$8.41x10^2$	$1.12x10^3$	$1.40x10^3$	$1.68x10^3$	$1.96x10^3$	$2.24x10^3$	$2.52x10^3$	$2.80x10^3$
ø80	Push	$5.03x10^2$	$7.54x10^2$	$1.01x10^3$	$1.51x10^3$	$2.01x10^3$	$2.51x10^3$	$3.02x10^3$	$3.52x10^3$	$4.02x10^3$	$4.52x10^3$	$5.03x10^3$
	Pull	$4.54x10^2$	$6.80x10^2$	$9.07x10^2$	$1.36x10^3$	$1.81x10^3$	$2.27x10^3$	$2.72x10^3$	$3.17x10^3$	$3.63x10^3$	$4.08x10^3$	$4.54x10^3$
ø100	Push	$7.85x10^2$	$1.18x10^3$	$1.57x10^3$	$2.36x10^3$	$3.14x10^3$	$3.93x10^3$	$4.71x10^3$	$5.50x10^3$	$6.28x10^3$	$7.07x10^3$	$7.85x10^3$
	Pull	$7.15x10^2$	$1.07x10^3$	$1.43x10^3$	$2.14x10^3$	$2.86x10^3$	$3.57x10^3$	$4.29x10^3$	$5.00x10^3$	$5.72x10^3$	$6.43x10^3$	$7.15x10^3$

Internal structure and parts list

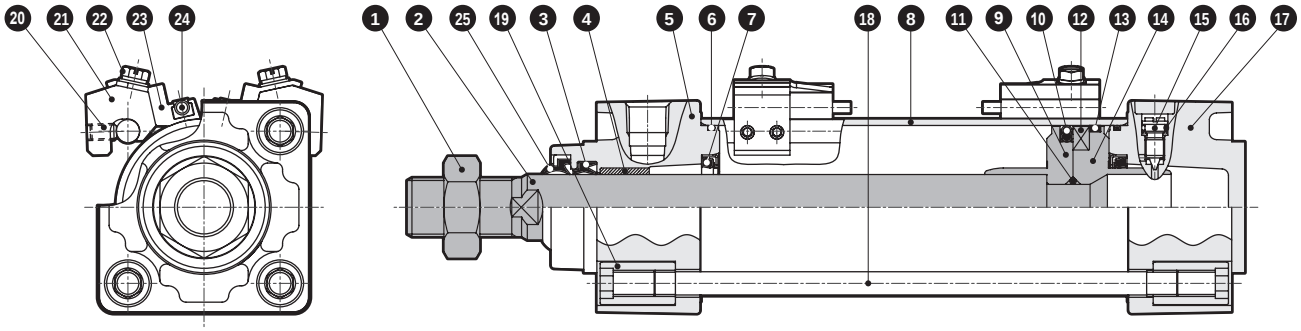

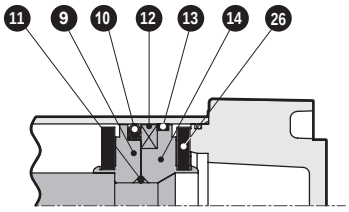

With rubber cushion

No.	Part name	Material	Remarks	No.	Part name	Material	Remarks
1	Rod nut	Steel	Nickel plating	14	Piston H	ø32, ø40: Aluminum alloy ø50 to ø100: Aluminum alloy die-casting	
2	Piston rod	Steel	Industrial chrome plating				
3	Rod packing	Nitrile rubber		15	Cushion needle	Copper alloy	Nickel plating
4	Bush	Oil-impregnated bearing alloy		16	Needle gasket	Nitrile rubber	
5	Rod cover	Aluminum alloy die-casting	Paint	17	Head cover	Aluminum alloy die-casting	Paint
6	Cylinder gasket	Nitrile rubber		18	Tie rod	Steel	Zinc chromate treatment
7	Cushion packing	Nitrile rubber, steel	With air cushion only	19	Round nut	Steel	Zinc chromate treatment
8	Cylinder tube	Aluminum alloy	Hard alumite treatment	20	Hexagon socket set screw	Steel	Black finish
9	Piston R	ø32, ø40: Aluminum alloy ø50 to ø100: Aluminum alloy die-casting		21	Switch mounting base	Aluminum alloy	
				22	Slotted hex head bolt, captive washer	Stainless steel	
10	Piston packing	Nitrile rubber		23	Switch holder	Aluminum alloy	
11	Piston gasket	Nitrile rubber		24	Cylinder switch		
12	Magnet	Plastic		25	Dust wiper	Nitrile rubber, steel	
13	Wear ring	Polyacetal resin		26	Cushion rubber	Urethane rubber	With rubber cushion only

Repair parts list

● With air cushion

Bore size (mm)	Kit No.	Repair parts No.
ø32	SCG-G-32BK	3 6 7 10 13 16 25
ø40	SCG-G-40BK	
ø50	SCG-G-50BK	
ø63	SCG-G-63BK	
ø80	SCG-G-80BK	
ø100	SCG-G-100BK	

Note: Specify the kit No. when placing an order.

● With rubber cushion

Bore size (mm)	Kit No.	Repair parts No.
ø32	SCG-G-32DK	3 6 10 13 16 25 26
ø40	SCG-G-40DK	
ø50	SCG-G-50DK	
ø63	SCG-G-63DK	
ø80	SCG-G-80DK	
ø100	SCG-G-100DK	

Note: Specify the kit No. when placing an order.

Material of mounting bracket

Mounting	Material	Remarks
LB	Steel	Nickel plating
FA/FB	Steel	Paint
CA/CB	Cast iron	Paint
TA/TB/TC	Cast iron	Paint

Note: Mounting bracket will be shipped with the product.
Trunnion (TA, TB, TC) are assembled at shipment.

Dimensions

● Basic (00)

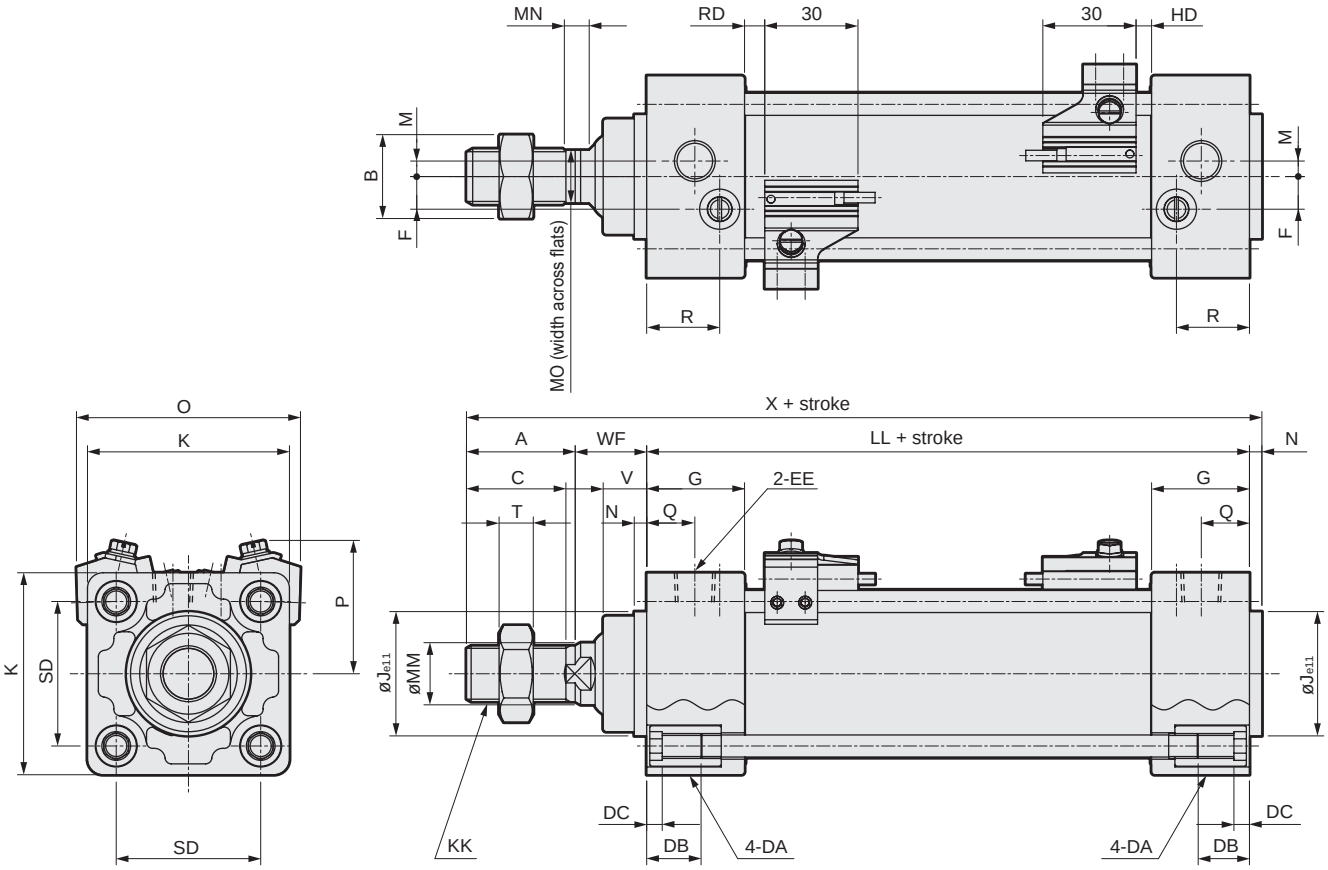

*1: Dimensions in ( ) are for the rubber cushion.
*2: Refer to page 436 for HD, RD and protruding dimensions of other switches.
*3: Mounting dimensions of each mounting form are the same as SCG (double acting/single rod). Refer to pages 364 to 371.
*4: For the dimensions of the accessories, refer to pages 372 and 373.

Code / Bore size (mm)	Basic (00) Basic dimensions																
	A	B	C	DA	DB	DC	EE	F	G	J	K	KK	*1 LL	M	MM	MN	MO
ø32	22	17	19.5	M6	16	5	Rc1/8	6.5	27	30	46	M10X1.25	84 (90)	4	12	5.5	10
ø40	30	22	27	M6	16	5	Rc1/4	9	27	35	52	M14X1.5	84 (90)	4	16	5	14
ø50	35	27	32	M8	16	5	Rc1/4	10.5	31.5	40	65	M18X1.5	94 (102)	5	20	8	17
ø63	35	27	32	M8	16	5	Rc3/8	12	31.5	45	75	M18X1.5	94 (102)	9	20	8	17
ø80	40	32	37	M10	16	5	Rc3/8	14	38	45	95	M22X1.5	114 (124)	11.5	25	8	22
ø100	40	41	37	M10	16	5	Rc1/2	15	38	55	114	M26X1.5	114 (124)	17	30	8	27

Code / Bore size (mm)									With switch					
	N	Q	R	SD	T	V	WF	*1 X	O	P	T0, T5 ,T2, T3		T2W, T3W	
											RD	HD	RD	HD
ø32	4	13	19	32.5	6	13	25	135 (141)	59	38	5	5	7.5	7.5
ø40	4	14	19	38	8	13	21	139 (145)	66	41	5	5	7.5	7.5
ø50	4	15.5	23.5	46.5	11	14	23	156 (164)	72	43	6.5	5	9	7
ø63	4	16.5	21.5	56.5	11	14	23	156 (164)	83	48	6.5	5	9	7
ø80	4	19	28	72	13	20	32	190 (200)	104	57	12.5	6	15	8
ø100	4	19	28	89	16	20	32	190 (200)	121	63	12	6.5	14.5	8.5

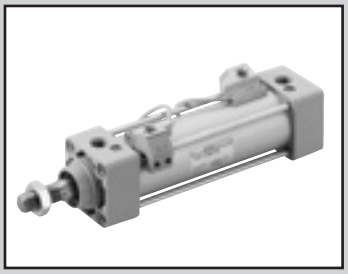

Tie rod cylinder Double acting/coolant proof

SCG-$^{G2}_{G3}$ Series

● Bore size: ø40/ø50/ø63/ø80/ø100

JIS symbol

RoHS CAD

Specifications

Item		SCG-$^{G2}_{G3}$				
Bore size	mm	ø40	ø50	ø63	ø80	ø100
Actuation		Double acting/coolant proof				
Working fluid		Compressed air				
Max. working pressure	MPa	1.0 (≈150 psi, 10 bar)				
Min. working pressure	MPa	0.1 (≈15 psi, 1 bar)				
Proof pressure	MPa	1.6 (≈230 psi, 16 bar)				
Ambient temperature	°C	-10 (14°F) to 60 (140°F) (no freezing)				
Port size		Rc1/4		Rc3/8		Rc1/2
Stroke tolerance	mm	$^{+1.0}_{0}$(to 360), $^{+1.4}_{0}$(361 to 1000), $^{+1.8}_{0}$(1001 to 1500)				
Working piston speed	mm/s	50 to 1000 (Operate within the allowable absorbed energy.)				
Cushion		Air cushion				
Effective air cushion length	mm	8.6	13.4	13.4	15.4	15.4
Lubrication		Not required (use turbine oil class 1 ISO VG32 if necessary for lubrication)				
Allowable absorbed energy	J	3.7	8.0	14.4	25.4	45.6

*1: Contact CKD for availability of ø32.
*2: Contact CKD for availability of the type with rubber cushion.

Stroke

Bore size (mm)	Standard stroke (mm)	Max. stroke (mm)	Available stroke (mm)	Min. stroke (mm)
ø40	25/50/75/100 150/200/250 300/350/400 450/500	600	800	1
ø50			1200	
ø63			1200	
ø80		700	1400	
ø100		800	1500	

*1: The custom stroke is available in 1 mm increments.
*2: If the max. stroke is exceeded, product specifications may not be met, depending on operating conditions. Contact CKD in this case.

Min. stroke with T2YL/T3YL switches

Switch quantity	Different surface mounting				Same surface mounting				Center trunnion mounting				Rod side trunnion mounting No position detection at rod side stroke end.	Head side trunnion mounting No position detection at head side stroke end.
Bore size (mm)	1	2	3	4	1	2	3	4	1	2	3	4	1	1
ø40	6	11	22	33	6	62(49)	92(80)	123(110)	91(66)	91(66)	182(127)	182(127)	43	43
ø50	6	12	24	36	6	12	24	36	93(68)	93(68)	93(68)	93(68)	42	43
ø63	6	12	24	36	6	12	24	36	99(74)	99(74)	99(74)	99(74)	48	49
ø80	7	13	25	38	7	13	25	38	110(85)	110(85)	110(86)	110(86)	48	54
ø100	7	13	26	39	7	13	26	39	115(90)	115(90)	115(92)	115(92)	54	60

*1: The values in ( ) are of T*V (L-shaped lead wire).
*2: When the stroke is 15 mm or less, the two switches could turn ON at the same time. In this case, adjust switch mounting positions to be as far apart as possible.

Switch specifications

Item	2-wire proximity	3-wire proximity
	T2YLH/T2YLV	T3YLH/T3YLV
Applications	Dedicated for programmable controller	Programmable controller, relay
Output method	-	NPN output
Power supply voltage	-	10 to 28 VDC
Load voltage/current	10 to 30 VDC, 5 to 20 mA *3	30 VDC or less, 50 mA or less
Indicator	Red/green LED (Lit when ON)	
Leakage current	1 mA or less	10 μA or less
Max. shock resistance	980 m / S^2	
Weight g	1 m:33 3 m:87 5 m:142	

*1: Refer to Ending Page 1 for detailed switch specifications and dimensions.
*2: Switches with connectors are also available. Refer to Ending Page 1.
*3: The max. load current is 20 mA at 25°C. The current is lower than 20 mA if the operating ambient temperature around the switch is higher than 25˚C. (5 to 10 mA at 60°C)

Weight table

(Unit: kg)

Bore size (mm)	Product weight for 0 mm stroke						Added weight /50 mm stroke	Switch weight (per 1 pc)	Switch mounting bracket	Accessory weight	
	Basic (00)	Foot (LB)	Flange (FA, FB)	Eye bracket (CA)	Clevis bracket (CB)	Trunnion (TA, TB, TC)				I	Y
ø40	0.66	0.80	0.94	0.85	0.85	1.00	0.17	Refer to the weight in the switch specifications.	0.024	0.07	0.13
ø50	1.13	1.29	1.61	1.54	1.54	1.61	0.23		0.022	0.20	0.30
ø63	1.39	1.73	2.15	1.95	1.96	2.27	0.25		0.022	0.20	0.30
ø80	2.66	3.09	4.23	3.93	3.94	4.15	0.40		0.026	0.52	0.94
ø100	3.77	4.63	6.09	5.49	5.52	6.34	0.51		0.024	0.48	0.92

Theoretical thrust table

(Unit: N)

Bore size (mm)	Operating direction	Working pressure MPa										
		0.1	0.15	0.2	0.3	0.4	0.5	0.6	0.7	0.8	0.9	1.0
ø40	Push	$1.26x10^2$	$1.88x10^2$	$2.51x10^2$	$3.77x10^2$	$5.03x10^2$	$6.28x10^2$	$7.54x10^2$	$8.80x10^2$	$1.01x10^3$	$1.13x10^3$	$1.26x10^3$
	Pull	$1.06x10^2$	$1.58x10^2$	$2.11x10^2$	$3.17x10^2$	$4.22x10^2$	$5.28x10^2$	$6.33x10^2$	$7.39x10^2$	$8.44x10^2$	$9.50x10^2$	$1.06x10^3$
ø50	Push	$1.96x10^2$	$2.95x10^2$	$3.93x10^2$	$5.89x10^2$	$7.85x10^2$	$9.82x10^2$	$1.18x10^3$	$1.37x10^3$	$1.57x10^3$	$1.77x10^3$	$1.96x10^3$
	Pull	$1.65x10^2$	$2.47x10^2$	$3.30x10^2$	$4.95x10^2$	$6.60x10^2$	$8.25x10^2$	$9.90x10^2$	$1.15x10^3$	$1.32x10^3$	$1.48x10^3$	$1.65x10^3$
ø63	Push	$3.12x10^2$	$4.68x10^2$	$6.23x10^2$	$9.35x10^2$	$1.25x10^3$	$1.56x10^3$	$1.87x10^3$	$2.18x10^3$	$2.49x10^3$	$2.81x10^3$	$3.12x10^3$
	Pull	$2.80x10^2$	$4.20x10^2$	$5.61x10^2$	$8.41x10^2$	$1.12x10^3$	$1.40x10^3$	$1.68x10^3$	$1.96x10^3$	$2.24x10^3$	$2.52x10^3$	$2.80x10^3$
ø80	Push	$5.03x10^2$	$7.54x10^2$	$1.01x10^3$	$1.51x10^3$	$2.01x10^3$	$2.51x10^3$	$3.02x10^3$	$3.52x10^3$	$4.02x10^3$	$4.52x10^3$	$5.03x10^3$
	Pull	$4.54x10^2$	$6.80x10^2$	$9.07x10^2$	$1.36x10^3$	$1.81x10^3$	$2.27x10^3$	$2.72x10^3$	$3.17x10^3$	$3.63x10^3$	$4.08x10^3$	$4.54x10^3$
ø100	Push	$7.85x10^2$	$1.18x10^3$	$1.57x10^3$	$2.36x10^3$	$3.14x10^3$	$3.93x10^3$	$4.71x10^3$	$5.50x10^3$	$6.28x10^3$	$7.07x10^3$	$7.85x10^3$
	Pull	$7.15x10^2$	$1.07x10^3$	$1.43x10^3$	$2.14x10^3$	$2.86x10^3$	$3.57x10^3$	$4.29x10^3$	$5.00x10^3$	$5.72x10^3$	$6.43x10^3$	$7.15x10^3$

How to order

No switch (built-in magnet for switch)

SCG - G2 - LB - 40 ◯ B - 100 ———— Y

With switch (built-in magnet for switch)

SCG - G2 - LB - 40 ◯ B - 100 - T2H - R - Y

Ⓐ Degree of protection level

Ⓑ Mounting *1

Ⓒ Bore size

Ⓓ Port thread

Ⓔ Cushion

Ⓕ Stroke

Ⓖ Switch model No.

Ⓗ Switch quantity *3

Ⓘ Accessory *4

Code	Description
Ⓐ Degree of protection level	
G2	Coolant proof scraper + packing NBR
G3	Coolant proof scraper + packing FKM

Ⓑ Mounting	
00	Basic
LB	Axial foot
FA	Rod side flange
FB	Head side flange
CA	Eye bracket
CB	Clevis bracket (pin and split pin included)
TA	Rod side trunnion
TB	Head side trunnion
TC	Intermediate trunnion

Ⓒ Bore size (mm)	
40	ø40
50	ø50
63	ø63
80	ø80
100	ø100
Note: Contact CKD for availability of ø32.	

Ⓓ Port thread	
Blank	Rc thread
N	NPT thread (made-to-order product)
G	G thread (made-to-order product)

Ⓔ Cushion	
B	Two-sided air cushion (basic)
Note: Contact CKD for availability of the type with rubber cushion.	

Ⓕ Stroke (mm)

Bore size	Stroke *2	Available stroke	Custom stroke
ø40	1 to 600	800	In 1 mm increments
ø50		1200	
ø63			
ø80	1 to 700	1400	
ø100	1 to 800	1500	

Ⓖ Switch model No.

Axial lead wire	Radial lead wire	Contact	Voltage AC	Voltage DC	Indicator	Lead wire
T2YLH*	T2YLV*	Proximity		●	2-color LED	2-wire
T3YLH*	T3YLV*			●		3-wire

*** Lead wire length**	
Blank	1 m (standard)
3	3 m (option)
5	5 m (option)

Ⓗ Switch quantity	
R	1 on rod side
H	1 on head side
D	2
T	3

Ⓘ Accessory	
I	Rod eye
Y	Rod clevis (pin and split pin included)
B1	Eye bracket
B2	Clevis bracket (pin and split pin included)
B3	Eye bracket
B4	Trunnion No. 2 bracket (2 pcs./set)

⚠ Precautions for model No. selection

*1 : Mounting bracket will be shipped with the product. (Trunnion are assembled at shipment.)
*2 : Refer to page 424 for the min. stroke with switch.
*3 : When selecting TA or TB as mounting, the number of switches is limited to "H" (1 on head side) for TA, and "R" (1 on rod side) for TB.
*4 : "I" and "Y" cannot be selected together.

[Example of model No.]

SCG-G2-LB-40B-100-T2H-D-I

Model: Tie rod cylinder, double acting/coolant proof

Ⓐ Degree of protection level	: Coolant proof scraper + packing NBR
Ⓑ Mounting	: Axial foot
Ⓒ Bore size	: ø40 mm
Ⓓ Port thread	: Rc thread
Ⓔ Cushion	: With two-sided air cushion
Ⓕ Stroke	:100 mm
Ⓖ Switch model No.	: Proximity T2H switch, lead wire 1 m
Ⓗ Switch quantity	: 2
Ⓘ Accessory	: Rod eye (included product)

How to order switch

● Switch body + mounting bracket set

SCG - T2YLH - 40

Switch model No. (Item Ⓖ on page 426)
Bore size (Item Ⓒ on page 426)

● Switch body only

SW - T2YLH

Switch model No. (Item Ⓖ on page 426)

Note: Contact CKD when using an environment-friendly T-switch.

● Switch mounting bracket set

SCG-G2 - T - 40

Mounting bracket
Bore size (Item Ⓒ on page 426)

How to order mounting bracket

Bore size (mm) / Mounting bracket	ø40	ø50	ø63	ø80	ø100
Foot (LB)	SCG-LB-40	SCG-LB-50	SCG-LB-63	SCG-LB-80	SCG-LB-100
Flange (FA) (FB)	SCG-FA-40	SCG-FA-50	SCG-FA-63	SCG-FA-80	SCG-FA-100
Eye bracket (CA)	SCG-CA-40	SCG-CA-50	SCG-CA-63	SCG-CA-80	SCG-CA-100
Clevis bracket (CB)	SCG-CB-40	SCG-CB-50	SCG-CB-63	SCG-CB-80	SCG-CB-100

Note: The foot mounting bracket (LB) is provided as 2 pcs./set.
Note: All mounting brackets are supplied with mounting bolts.

Internal structure and parts list

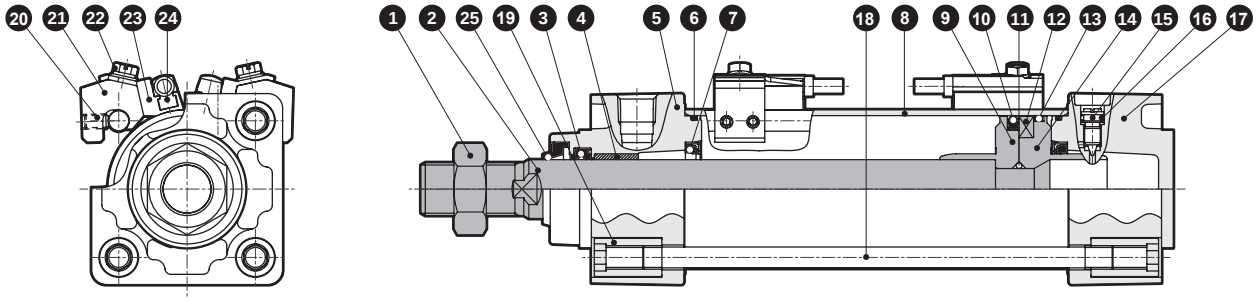

No.	Part name		Material	Remarks	No.	Part name		Material	Remarks
1	Rod nut		Stainless steel		12	Magnet		Plastic	
2	Piston rod		Stainless steel	Industrial chrome plating	13	Wear ring		Polyacetal resin	
3	Rod packing	G2	Nitrile rubber		14	Piston H		ø40: Aluminum alloy ø50 to ø100: Aluminum alloy die-casting	Chromate treatment
		G3	Fluoro rubber						
4	Bush		Oil-impregnated bearing alloy		15	Cushion needle		Steel alloy	Nickel plating
5	Rod cover		Aluminum alloy die-casting	Paint	16	Needle gasket	G2	Nitrile rubber	
6	Cylinder gasket	G2	Nitrile rubber				G3	Fluoro rubber	
		G3	Fluoro rubber		17	Head cover		Aluminum alloy die-casting	Paint
7	Cushion packing	G2	Nitrile rubber, steel	With air cushion only	18	Tie rod		Steel	Zinc chromate treatment
		G3	Fluoro rubber, steel	With air cushion only	19	Round nut		Steel	Zinc chromate treatment
8	Cylinder tube		Aluminum alloy	Hard alumite treatment	20	Hexagon socket set screw		Stainless steel	
9	Piston R		ø40: Aluminum alloy ø50 to ø100: Aluminum alloy die-casting	Chromate treatment	21	Switch mounting base		Aluminum alloy	Alodine treatment
					22	Slotted hex head bolt, captive washer		Stainless steel	
10	Piston packing	G2	Nitrile rubber		23	Switch holder		Aluminum alloy	Alodine treatment
		G3	Fluoro rubber		24	Cylinder switch			
11	Piston gasket	G2	Nitrile rubber		25	Dust wiper	G2	Nitrile rubber, steel	
		G3	Fluoro rubber				G3	Fluoro rubber, steel	

Repair parts list

Bore size (mm)		Kit No.	Repair parts No.
ø40	G2	SCG-G2-40BK	3 6 7 10 13 16 25
	G3	SCG-G3-40BK	
ø50	G2	SCG-G2-50BK	
	G3	SCG-G3-50BK	
ø63	G2	SCG-G2-63BK	
	G3	SCG-G3-63BK	
ø80	G2	SCG-G2-80BK	
	G3	SCG-G3-80BK	
ø100	G2	SCG-G2-100BK	
	G3	SCG-G3-100BK	

Note: Specify the kit No. when placing an order.

Material of mounting bracket

Mounting	Material	Remarks
LB	Steel	Nickel plating
FA/FB	Steel	Paint
CA/CB	Cast iron	Paint
TA/TB/TC	Cast iron	Paint

Note: Mounting bracket will be shipped with the product.
Trunnion (TA, TB, TC) are assembled at shipment.

Dimensions

● Basic (00)

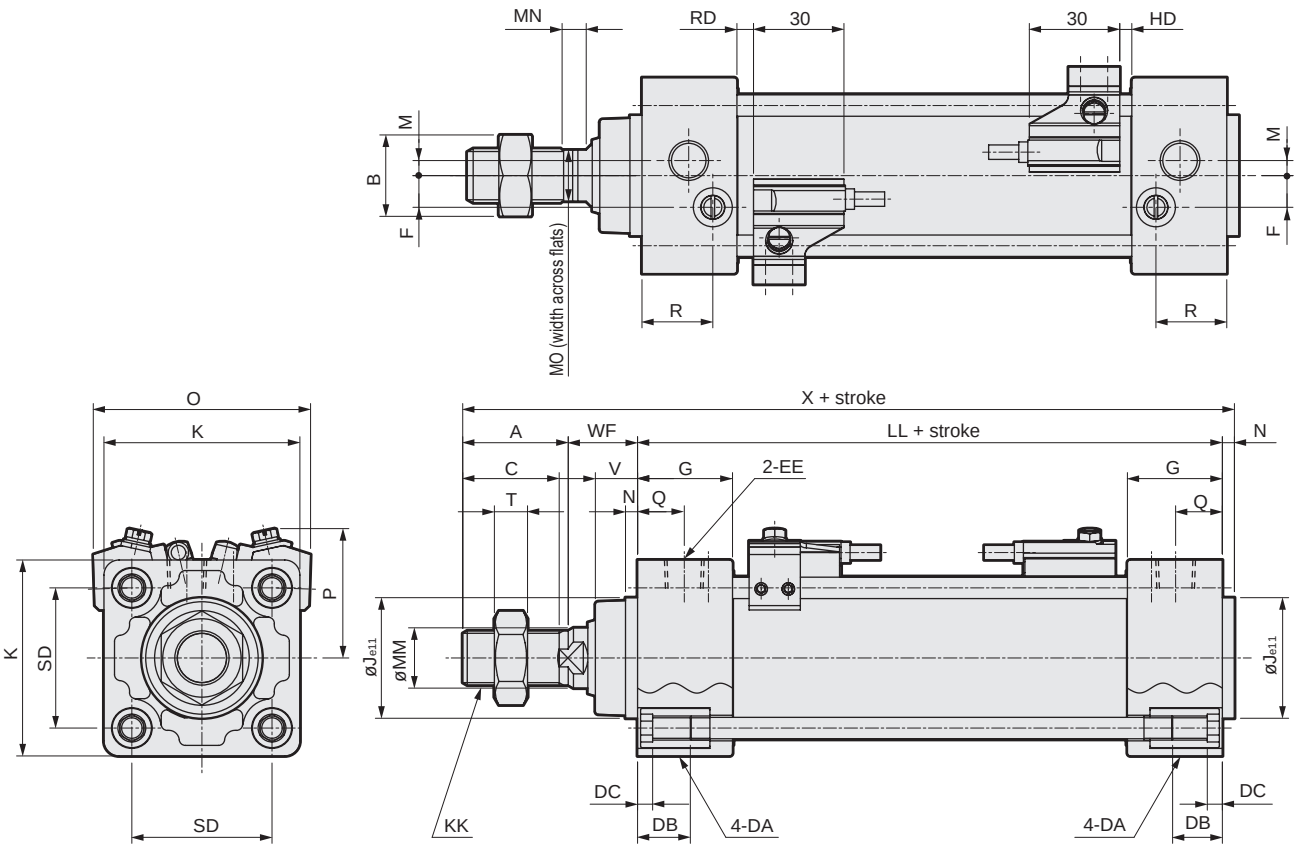

*1: Mounting dimensions of each mounting form are the same as SCG (double acting/single rod). Refer to pages 364 to 371.
*2: For the dimensions of the accessories, refer to pages 372 and 373.

Code / Bore size (mm)	Basic (00) Basic dimensions																
	A	B	C	DA	DB	DC	EE	F	G	J	K	KK	LL	M	MM	MN	MO
ø40	30	22	27	M6	16	5	Rc1/4	9	27	35	52	M14X1.5	84	4	16	5	14
ø50	35	27	32	M8	16	5	Rc1/4	10.5	31.5	40	65	M18X1.5	94	5	20	8	17
ø63	35	27	32	M8	16	5	Rc3/8	12	31.5	45	75	M18X1.5	94	9	20	8	17
ø80	40	32	37	M10	16	5	Rc3/8	14	38	45	95	M22X1.5	114	11.5	25	8	22
ø100	40	41	37	M10	16	5	Rc1/2	15	38	55	114	M26X1.5	114	17	30	8	27

Code / Bore size (mm)									With switch			
	N	Q	R	SD	T	V	WF	X	O	P	RD	HD
ø40	4	14	19	38	8	13	21	139	66	41	4	4
ø50	4	15.5	23.5	46.5	11	14	23	156	72	43	5.5	4
ø63	4	16.5	21.5	56.5	11	14	23	156	83	48	5.5	4
ø80	4	19	28	72	13	20	32	190	104	57	11.5	5
ø100	4	19	28	89	16	20	32	190	121	63	11	5.5

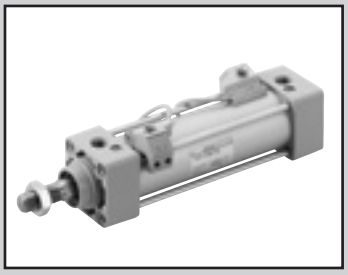

Tie rod cylinder Double acting/anti-spatter adherence

SCG-G4 Series

● Bore size: ø32/ø40/ø50/ø63/ø80/ø100

JIS symbol

RoHS CAD

Specifications

Item		SCG-G4					
Bore size mm		ø32	ø40	ø50	ø63	ø80	ø100
Actuation		Double acting					
Working fluid		Compressed air					
Max. working pressure MPa		1.0 (≈150 psi, 10 bar)					
Min. working pressure MPa		0.1 (≈15 psi, 1 bar)					
Proof pressure MPa		1.6 (≈230 psi, 16 bar)					
Ambient temperature °C		-10 (14°F) to 60 (140°F) (no freezing)					
Port size		Rc1/8	Rc1/4		Rc3/8		Rc1/2
Stroke tolerance mm	With rubber cushion	$^{+1.4}_{0}$(to 1000), $^{+1.8}_{0}$(1001 to 1500)					
	With air cushion	$^{+1.0}_{0}$(to 360), $^{+1.4}_{0}$(361 to 1000), $^{+1.8}_{0}$(1001 to 1500)					
Working piston speed mm/s		50 to 1000 (Operate within the allowable absorbed energy.)					
Cushion		Either air cushion or rubber cushion can be selected					
Effective air cushion length mm		8.6	8.6	13.4	13.4	15.4	15.4
Lubrication		Not required (use turbine oil class 1 ISO VG32 if necessary for lubrication)					
Allowable absorbed energy J	With rubber cushion	0.5	0.9	1.6	1.6	3.3	5.8
	With air cushion	2.5	3.7	8.0	14.4	25.4	45.6

Stroke

Bore size (mm)	Standard stroke (mm)	Max. stroke (mm)	Available stroke (mm)	Min. stroke (mm)
ø32	25/50/75/100 150/200/250 300/350/400 450/500	600	700	1
ø40			800	
ø50			1200	
ø63			1200	
ø80		700	1400	
ø100		800	1500	

*1: The custom stroke is available in 1 mm increments.
*2: If the max. stroke is exceeded, product specifications may not be met, depending on operating conditions. Contact CKD in this case.

Min. stroke with T2YD switch

Switch quantity	Different surface mounting				Same surface mounting				Center trunnion mounting				Rod side trunnion mounting No position detection at rod side stroke end.	Head side trunnion mounting No position detection at head side stroke end.
Bore size (mm)	1	2	3	4	1	2	3	4	1	2	3	4	1	1
ø32	6	11	22	33	6	62	92	123	86	86	177	177	38	38
ø40	6	11	22	33	6	62	92	123	91	91	182	182	43	43
ø50	6	12	24	36	6	12	24	36	93	93	93	93	42	43
ø63	6	12	24	36	6	12	24	36	99	99	99	99	48	49
ø80	7	13	25	38	7	13	25	38	110	110	110	110	48	54
ø100	7	13	26	39	7	13	26	39	115	115	115	115	54	60

*1: When the stroke is 15 mm or less, the two switches could turn ON at the same time. In this case, adjust switch mounting positions to be as far apart as possible.

Switch specifications

● Strong magnetic field proof

Item	2-wire proximity	
	T2YD	T2YDT
Applications	Dedicated for programmable controller	
Indicator	Red/green LED (Lit when ON)	
Load voltage	24 DC ±10%	
Load current	5 to 20 mA	
Internal voltage drop	6V or less	
Leakage current	1.0 mA or less	
Weight g	1 m:61 3 m:166 5 m:272	

*1: This switch cannot be used in DC magnetic field.

Weight table

(Unit: kg)

Bore size (mm)	Product weight for 0 mm stroke						Stroke: Added weight/50 mm	Switch weight (per 1 pc)	Switch mounting bracket	Accessory weight	
	Basic (00)	Foot (LB)	Flange (FA, FB)	Eye bracket (CA)	Clevis bracket (CB)	Trunnion (TA/TB/TC)				I	Y
ø32	0.51	0.62	0.73	0.66	0.69	0.68	0.12	Refer to the weight in the switch specifications.	0.024	0.07	0.10
ø40	0.68	0.82	0.96	0.86	0.86	1.02	0.17		0.024	0.07	0.13
ø50	1.16	1.32	1.64	1.56	1.57	1.64	0.23		0.022	0.20	0.30
ø63	1.42	1.76	2.18	1.97	1.99	2.29	0.25		0.022	0.20	0.30
ø80	2.69	3.12	4.26	3.96	3.96	4.18	0.40		0.026	0.52	0.94
ø100	3.80	4.66	6.12	5.52	5.55	6.37	0.51		0.024	0.48	0.92

Theoretical thrust table

(Unit: N)

Bore size (mm)	Operating direction	Working pressure MPa										
		0.1	0.15	0.2	0.3	0.4	0.5	0.6	0.7	0.8	0.9	1.0
ø32	Push	80.4	1.21×10^2	1.61×10^2	2.41×10^2	3.22×10^2	4.02×10^2	4.83×10^2	5.63×10^2	6.43×10^2	7.24×10^2	8.04×10^2
	Pull	69.1	1.04×10^2	1.38×10^2	2.07×10^2	2.76×10^2	3.46×10^2	4.15×10^2	4.84×10^2	5.53×10^2	6.22×10^2	6.91×10^2
ø40	Push	1.26×10^2	1.88×10^2	2.51×10^2	3.77×10^2	5.03×10^2	6.28×10^2	7.54×10^2	8.80×10^2	1.01×10^3	1.13×10^3	1.26×10^3
	Pull	1.06×10^2	1.58×10^2	2.11×10^2	3.17×10^2	4.22×10^2	5.28×10^2	6.33×10^2	7.39×10^2	8.44×10^2	9.50×10^2	1.06×10^3
ø50	Push	1.96×10^2	2.95×10^2	3.93×10^2	5.89×10^2	7.85×10^2	9.82×10^2	1.18×10^3	1.37×10^3	1.57×10^3	1.77×10^3	1.96×10^3
	Pull	1.65×10^2	2.47×10^2	3.30×10^2	4.95×10^2	6.60×10^2	8.25×10^2	9.90×10^2	1.15×10^3	1.32×10^3	1.48×10^3	1.65×10^3
ø63	Push	3.12×10^2	4.68×10^2	6.23×10^2	9.35×10^2	1.25×10^3	1.56×10^3	1.87×10^3	2.18×10^3	2.49×10^3	2.81×10^3	3.12×10^3
	Pull	2.80×10^2	4.20×10^2	5.61×10^2	8.41×10^2	1.12×10^3	1.40×10^3	1.68×10^3	1.96×10^3	2.24×10^3	2.52×10^3	2.80×10^3
ø80	Push	5.03×10^2	7.54×10^2	1.01×10^3	1.51×10^3	2.01×10^3	2.51×10^3	3.02×10^3	3.52×10^3	4.02×10^3	4.52×10^3	5.03×10^3
	Pull	4.54×10^2	6.80×10^2	9.07×10^2	1.36×10^3	1.81×10^3	2.27×10^3	2.72×10^3	3.17×10^3	3.63×10^3	4.08×10^3	4.54×10^3
ø100	Push	7.85×10^2	1.18×10^3	1.57×10^3	2.36×10^3	3.14×10^3	3.93×10^3	4.71×10^3	5.50×10^3	6.28×10^3	7.07×10^3	7.85×10^3
	Pull	7.15×10^2	1.07×10^3	1.43×10^3	2.14×10^3	2.86×10^3	3.57×10^3	4.29×10^3	5.00×10^3	5.72×10^3	6.43×10^3	7.15×10^3

How to order

No switch (built-in magnet for switch)

SCG-G4 - LB - 40 ◯ B - 100 ———— M I

With switch (built-in magnet for switch)

SCG-G4 - LB - 40 ◯ B - 100 - T2YD - R - M I

Model No.

Ⓐ Mounting *1

Ⓑ Bore size

Ⓒ Port thread

Ⓓ Cushion

Ⓔ Stroke

Ⓕ Switch model No.

Ⓖ Switch quantity *3

Ⓗ Option

Ⓘ Accessory *4

Code	Description
Ⓐ Mounting	
00	Basic
LB	Axial foot
FA	Rod side flange
FB	Head side flange
CA	Eye bracket
CB	Clevis bracket (pin and split pin included)
TA	Rod side trunnion
TB	Head side trunnion
TC	Intermediate trunnion
Ⓑ Bore size (mm)	
32	ø32
40	ø40
50	ø50
63	ø63
80	ø80
100	ø100
Ⓒ Port thread	
Blank	Rc thread
N	NPT thread (made-to-order product)
G	G thread (made-to-order product)
Ⓓ Cushion	
B	Two-sided air cushion (basic)
D	Two-sided rubber cushion
Note: The rubber cushion has a longer total length than the air cushion.	

Ⓔ Stroke (mm)

Bore size	Stroke *2	Available stroke	Custom stroke
ø32	1 to 600	700	In 1 mm increments
ø40		800	
ø50		1200	
ø63			
ø80	1 to 700	1400	
ø100	1 to 800	1500	

Ⓕ Switch model No.

Lead wire	Contact	Indicator	Lead wire
T2YD*	Proximity	2-color LED AC magnetic field	2-wire
T2YDT*			

* Lead wire length	
Blank	1 m (standard)
3	3 m (option)
5	5 m (option)

Ⓖ Switch quantity	
R	1 on rod side
H	1 on head side
D	2
T	3

Ⓗ Option	
M	Piston rod material (stainless steel)

Ⓘ Accessory	
I	Rod eye
Y	Rod clevis (pin and split pin included)
B1	Eye bracket
B2	Clevis bracket (pin and split pin included)
B3	Eye bracket
B4	Trunnion No. 2 bracket (2 pcs./set)

⚠ Precautions for model No. selection

*1 : Mounting bracket will be shipped with the product. (Trunnion are assembled at shipment.)
*2 : Refer to page 430 for the min. stroke with switch.
*3 : When selecting TA or TB as mounting, the number of switches is limited to "H" (1 on head side) for TA, and "R" (1 on rod side) for TB.
*4 : "I" and "Y" cannot be selected together.

[Example of model No.]

SCG-G4-LB-40B-100-T2YD-D-MI

Model: Tie rod cylinder Double acting/anti-spatter adherence

Ⓐ Mounting : Axial foot
Ⓑ Bore size : ø40 mm
Ⓒ Port thread : Rc thread
Ⓓ Cushion : With two-sided air cushion
Ⓔ Stroke : 100 mm
Ⓕ Switch model No. : Proximity T2YD switch, lead wire 1 m
Ⓖ Switch quantity : 2
Ⓗ Option : Piston rod material (stainless steel)
Ⓘ Accessory : Rod eye (included product)

How to order switch

● Switch body + mounting bracket set

SCG - T2YD - 40

Switch model No. (Item Ⓕ on page 432)
Bore size (Item Ⓑ on page 432)

● Switch body only

SW - T2YD

Switch model No. (Item Ⓕ on page 432)

Note: Contact CKD when using an environment-friendly T-switch.

● Switch mounting bracket set

SCG - T - 40

Mounting bracket
Bore size (Item Ⓑ on page 432)

How to order mounting bracket

Bore size (mm) / Mounting bracket	ø32	ø40	ø50	ø63	ø80	ø100
Foot (LB)	SCG-LB-32	SCG-LB-40	SCG-LB-50	SCG-LB-63	SCG-LB-80	SCG-LB-100
Flange (FA) (FB)	SCG-FA-32	SCG-FA-40	SCG-FA-50	SCG-FA-63	SCG-FA-80	SCG-FA-100
Eye bracket (CA)	SCG-CA-32	SCG-CA-40	SCG-CA-50	SCG-CA-63	SCG-CA-80	SCG-CA-100
Clevis bracket (CB)	SCG-CB-32	SCG-CB-40	SCG-CB-50	SCG-CB-63	SCG-CB-80	SCG-CB-100

*1: The foot mounting bracket (LB) is provided as 2 pcs./set.
*2: All mounting brackets are supplied with mounting bolts.

Internal structure and parts list

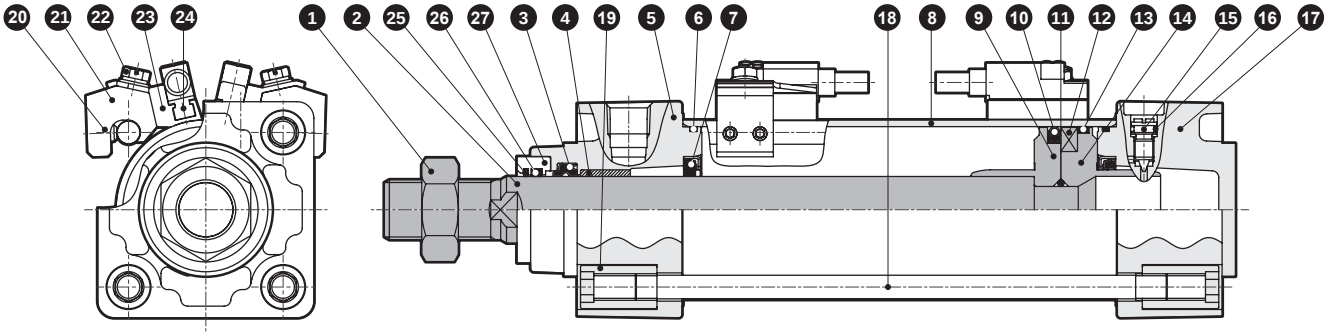

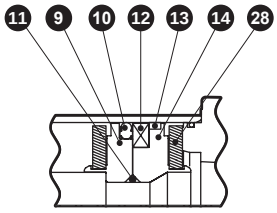

With rubber cushion

No.	Part name	Material	Remarks
1	Rod nut	Steel	Nickel plating
2	Piston rod	Steel	Industrial chrome plating
3	Rod packing	Nitrile rubber	
4	Bush	Oil-impregnated bearing alloy	
5	Rod cover	Aluminum alloy die-casting	Paint
6	Cylinder gasket	Nitrile rubber	
7	Cushion packing	Nitrile rubber, steel	With air cushion only
8	Cylinder tube	Aluminum alloy	Hard alumite treatment
9	Piston R	ø32, ø40: Aluminum alloy ø50 to ø100: Aluminum alloy die-casting	
10	Piston packing	Nitrile rubber	
11	Piston gasket	Nitrile rubber	
12	Magnet	Plastic	
13	Wear ring	Polyacetal resin	
14	Piston H	ø32, ø40: Aluminum alloy ø50 to ø100: Aluminum alloy die-casting	

No.	Part name	Material	Remarks
15	Cushion needle	Copper alloy	Nickel plating
16	Needle gasket	Nitrile rubber	
17	Head cover	Aluminum alloy die-casting	Paint
18	Tie rod	Steel	Zinc chromate treatment
19	Round nut	Steel	Zinc chromate treatment
20	Hexagon socket set screw	Steel	Black finish
21	Switch mounting base	Aluminum alloy	
22	Slotted head hexagon head bolt with captive washer	Stainless steel	
23	Switch holder	Aluminum alloy	
24	Cylinder switch		
25	Coil scraper	Phosphor bronze	
26	Lube keeping structure	Special rubber	
27	Adapter	Stainless steel	
28	Cushion rubber	Urethane rubber	With rubber cushion only

Material of mounting bracket

Mounting	Material	Remarks
LB	Steel	Nickel plating
FA/FB	Steel	Paint
CA/CB	Cast iron	Paint
TA/TB/TC	Cast iron	Paint

Note: Mounting bracket will be shipped with the product.
Trunnion (TA, TB, TC) are assembled at shipment.

Dimensions

● Basic (00)

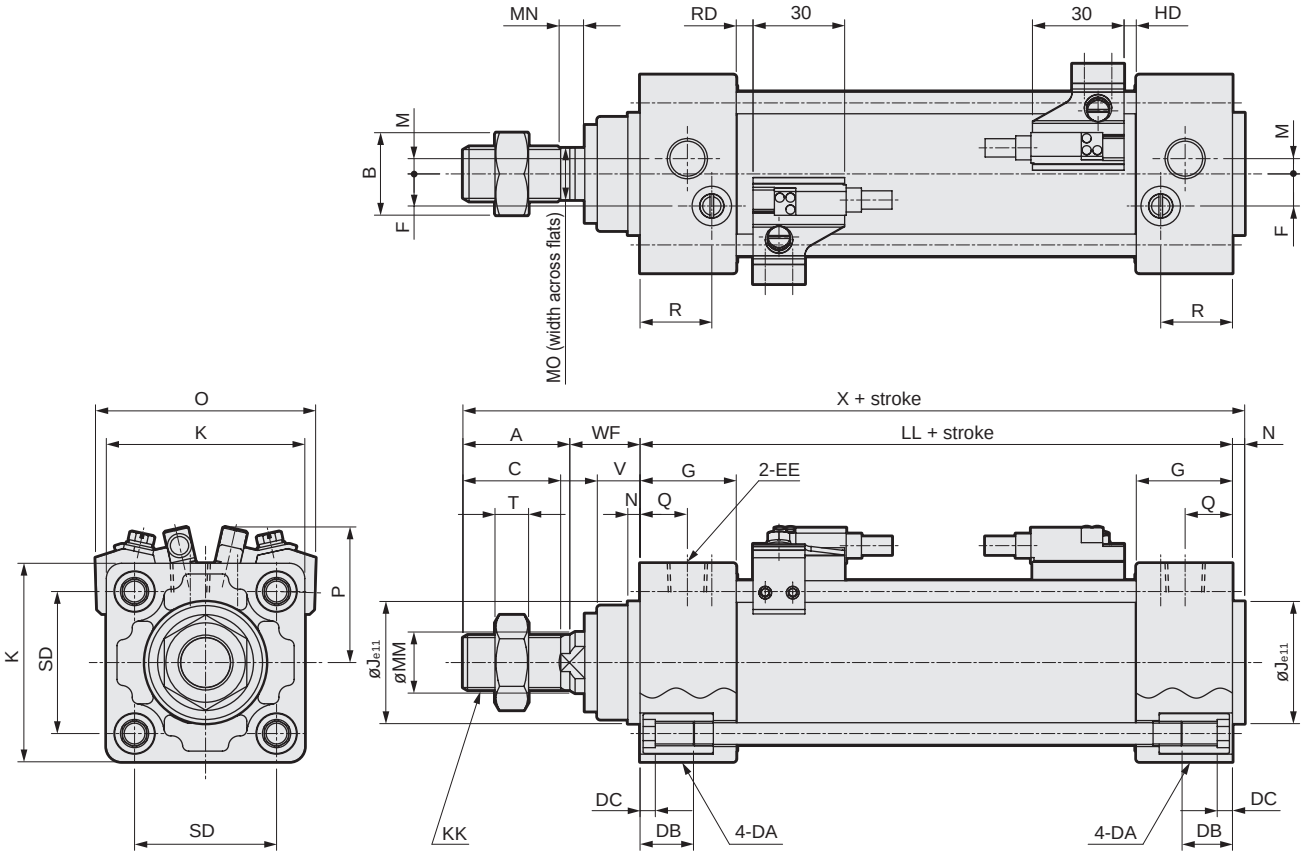

*1: Dimensions in ( ) are for the rubber cushion.
*2: Mounting dimensions of each mounting form are the same as SCG (double acting/single rod). Refer to pages 364 to 371.
*3: For the dimensions of the accessories, refer to pages 372 and 373.

Code / Bore size (mm)	Basic (00) Basic dimensions																
	A	B	C	DA	DB	DC	EE	F	G	J	K	KK	*1 LL	M	MM	MN	MO
ø32	22	17	19.5	M6	16	5	Rc1/8	6.5	27	30	46	M10X1.25	84 (90)	4	12	5.5	10
ø40	30	22	27	M6	16	5	Rc1/4	9	27	35	52	M14X1.5	84 (90)	4	16	5	14
ø50	35	27	32	M8	16	5	Rc1/4	10.5	31.5	40	65	M18X1.5	94 (102)	5	20	8	17
ø63	35	27	32	M8	16	5	Rc3/8	12	31.5	45	75	M18X1.5	94 (102)	9	20	8	17
ø80	40	32	37	M10	16	5	Rc3/8	14	38	45	95	M22X1.5	114 (124)	11.5	25	8	22
ø100	40	41	37	M10	16	5	Rc1/2	15	38	55	114	M26X1.5	114 (124)	17	30	8	27

Code / Bore size (mm)									With switch			
	N	Q	R	SD	T	V	WF	*1 X	O	P	*1 RD	*1 HD
ø32	4	13	19	32.5	6	13	25	135 (141)	59	38	4 (7)	4 (7)
ø40	4	14	19	38	8	13	21	139 (145)	66	41	4 (7)	4 (7)
ø50	4	15.5	23.5	46.5	11	14	23	156 (164)	72	44	5.5 (9.5)	4 (8)
ø63	4	16.5	21.5	56.5	11	14	23	156 (164)	83	50	5.5 (9.5)	4 (8)
ø80	4	19	28	72	13	20	32	190 (200)	104	59	11.5 (16.5)	5 (10)
ø100	4	19	28	89	16	20	32	190 (200)	121	67	11 (16)	5.5 (10.5)

SCP*3
CMK2
CMA2
SCM
SCG
SCA2
SCS2
CKV2
CAV2/ COVP/N2
SSD2
SSG
SSD
CAT
MDC2
MVC
SMG
MSD/ MSDG
FC*
STK
SRL3
SRG3
SRM3
SRT3
MRL2
MRG2
SM-25
ShkAbs
FJ
FK
Spd Contr
Ending

SCG Series with common switch Dimensions

● With T2Y, T3Y, T2J, T8 switches

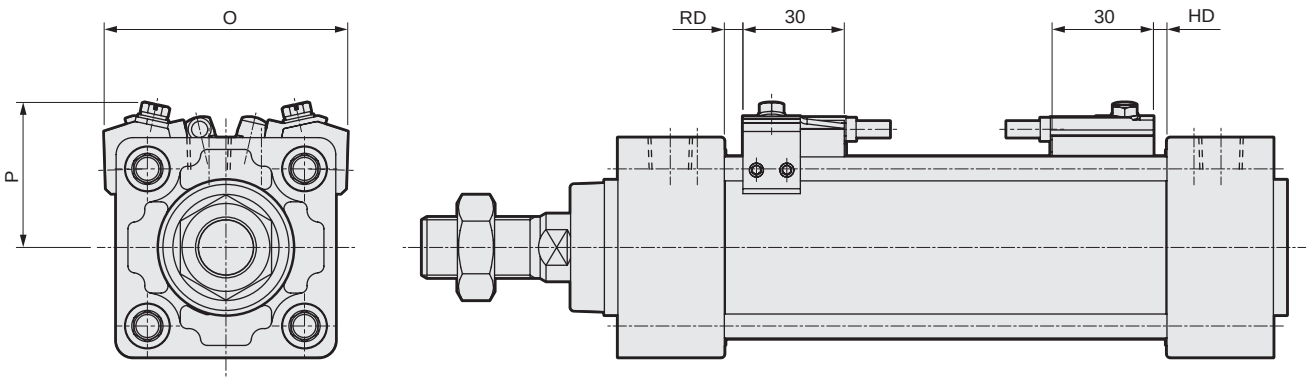

Code / Bore size (mm)	With T2Y, T3Y, T2J, T8 switches					
	O	P	T2Y, T3Y, T2J		T8	
			RD	HD	RD	HD
ø32	59	38	4 (7)	4 (7)	0 (2)	0 (2)
ø40	66	41	4 (7)	4 (7)	0 (2)	0 (2)
ø50	72	43	5.5 (9.5)	4 (8)	0.5 (4.5)	0 (3)
ø63	83	48	5.5 (9.5)	4 (8)	0.5 (4.5)	0 (3)
ø80	104	57	11.5 (16.5)	5 (10)	6.5 (11.5)	0 (5)
ø100	121	63	11 (16)	5.5 (10.5)	6 (11)	0.5 (5.5)

*1: Dimensions in ( ) are for the rubber cushion.

● With T1, T2YD, T2YDT-switches

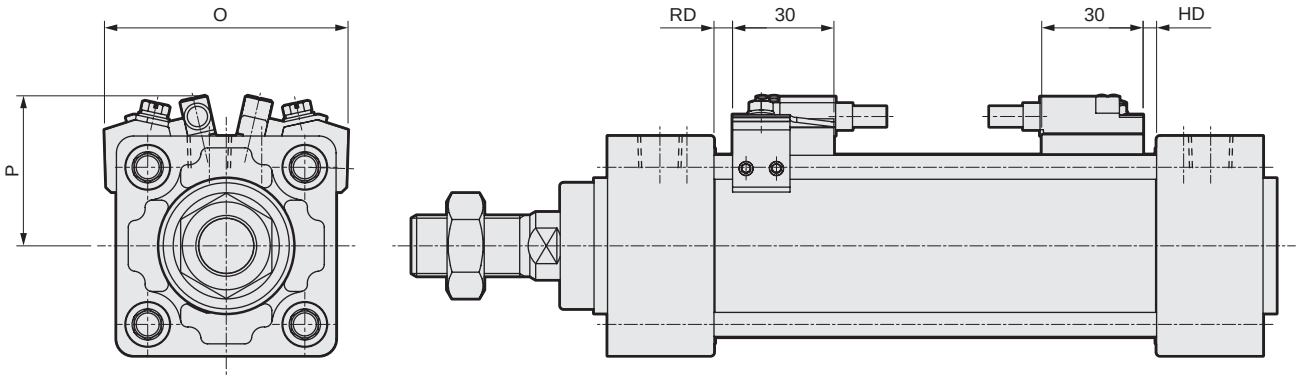

Code / Bore size (mm)	With T1, T2YD, T2YDT-switches			
	O	P	RD	HD
ø32	59	38	4 (7)	4 (7)
ø40	66	41	4 (7)	4 (7)
ø50	72	44	5.5 (9.5)	4 (8)
ø63	83	50	5.5 (9.5)	4 (8)
ø80	104	57	11.5 (16.5)	5 (10)
ø100	121	64	11 (16)	5.5 (10.5)

*1: Dimensions in ( ) are for the rubber cushion.

MEMO

Pneumatic components

Safety Precautions

Be sure to read this section before use.
Refer to Intro Page 73 for general information of the cylinder, and to Intro Page 80 for general information of the cylinder switch.

Product-specific cautions: Tie rod cylinders SCG Series

Design/selection

1. Common

CAUTION

■ Mount a speed controller on the cylinder.
Mount the speed controller on the cylinder.
Use within the working piston speed range of each series.

CAUTION

■ As a cushion mechanism integrated in the cylinder, the rubber cushion and the air cushion are available. The purpose of the air cushion is to absorb the piston's kinetic energy by using air compressibility, avoiding collisions of piston and cover at the stroke end. Thus, the cushion is not used to decelerate the piston speed (deceleration action) near the stroke end. The following table shows the kinetic energy that can be absorbed by the cushion. If the kinetic energy exceeds these values, or if bouncing caused by the air compressibility is to be avoided, consider using another shock absorber.

Bore size (mm)	Rubber cushion	Air cushion	
	Allowable absorbed energy J	Effective air cushion length (mm)	Allowable absorbed energy J
ø32	0.5	8.6	2.5
ø40	0.9	8.6	3.7
ø50	1.6	13.4	8.0
ø63	1.6	13.4	14.4
ø80	3.3	15.4	25.4
ø100	5.8	15.4	45.6

Kinetic energy (J) =

$$\frac{1}{2} \times \text{Weight (kg)} \times \{\text{Speed (m/s)}\}^2$$

(Note) Calculating kinetic energy

Average cylinder speed is obtained with $Va = \frac{L}{T}$.

Va : Average speed (m/s)
L : Cylinder stroke (m)
T : Operating time (s)

With respect to this, the cylinder speed just before rushing into the cushion can be obtained with the following simple formula.

$$Vm = \frac{L}{T} \times \left(1 + 1.5 \times \frac{\omega}{100}\right)$$

Vm: Speed just before rush into cushion (m/s)
ω : Cylinder load factor (%)

Use this Vm value as speed to calculate kinetic energy.

2. Position locking SCG-Q

WARNING

■ If pressure is supplied to the port Ⓐ when both ports are not pressurized and the piston is locked, the lock may not be released or the piston rod may suddenly pop out just after the lock is released. This can be extremely hazardous. To release the lock mechanism, make sure to supply pressure to port Ⓑ. Check that load is not applied to the lock mechanism.

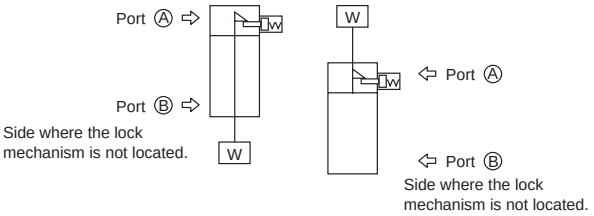

■ For usage where the drop rate is increased using the quick exhaust valve, the lock may not release normally because the cylinder body starts operating before the lock pin. For the position locking cylinder, do not use the quick manual exhaust.

■ Do not use 3-position valves.
Do not use the cylinder in combination with 3-position (especially closed center metal seal) valves. If the port at the side where the lock mechanism is located is pressurized, the lock cannot be engaged. Even if it is locked once, the air leaked from the solenoid valve may enter the cylinder, and the lock may be released after a certain period of time.

CAUTION

■ Cylinder load factor must be 50% or less.
If the load factor is high, the lock may not be released, or the lock section may be damaged.

■ If back pressure is applied to the locking mechanism, the lock may be released. Use a single solenoid valve, or an individual exhaust manifold.

■ Do not use multiple synchronized cylinders.
Do not use so that 1 workpiece is moved by synchronizing 2 or more position locking cylinders. Lock release may fail for one of the cylinders.

3. Low friction SCG-U

⚠WARNING

■Durability differs based on working conditions and model characteristics.
This cylinder has internal leakage.
Refer to specifications (page 402) for amount of leakage.

⚠CAUTION

■When using the cylinder for a balancer, etc., it may be advisable not to mount a speed controller in order to improve the supply and exhaust efficiency. Depending on the application, circuits ⓐto ⓒbelow are recommended.

ⓐTension control
(winding machine, etc.)

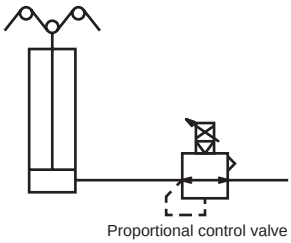

ⓑ Balancer
(processing machine Z-axis, etc.)

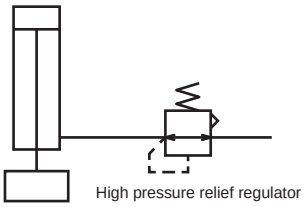

ⓒLoad control (grinding, etc.)

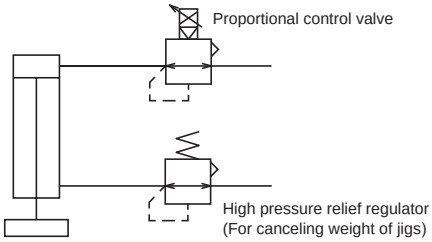

* To improve the supply and exhaust efficiency, make the volume of piping as large as possible.

■Do not lubricate. The properties fluctuate.

■Because poor quality air worsens the characteristics and adversely affects the durability, use clean air with the piping below.

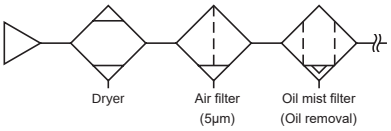

■Mount the speed controller near the cylinder.
When installed at a distant place from the cylinder, the adjustment becomes unstable.

■In general, the speed is more stable at higher air pressure and lower load factor.
Use at a 50% or less load factor.

4. Coolant proof SCG-G2/G3

⚠CAUTION

■Do not apply an eccentric load to the piston rod. The service life of the scraper or bearing could be shortened.

■In the case that the G2 or G3 Series are not exposed to splattering of coolant or water, the lubrication of the piston rod will run out and the service life will be shortened. Use the G Series in this case.

5. Anti-spatter adherence SCG-G4

⚠WARNING

■The durability of this cylinder series is improved in comparison to standard cylinders when used in an atmosphere exposed to spatter. But durability may be shorter than the standard cylinder when used in other atmospheres.

Mounting, installation and adjustment

1. Common

⚠ CAUTION

Caution for mounting the switch

■ Fixing the switch
For screw fixing when using T2, T3, T0, or T5, use a flathead screwdriver (clockwork screwdriver, precision screwdriver, etc.) with a grip diameter of 5 to 6 mm, a 2.4 mm or smaller tip, and a thickness of 0.3 mm or less to tighten the screws with a tightening torque of 0.1 to 0.2 N·m.
When using T2J, T2Y, or T3Y, tighten the screw with a tightening torque of 0.5 to 0.7 N·m.

2. Position locking SCG-Q

⚠ CAUTION

■ The lock mechanism functions at the stroke end, so that if the stopper is engaged during the stroke by the external stopper, the lock mechanism may not work and the piston could fall. When setting a load, make sure to check that the lock mechanism functions before installing the product.

■ Supply pressure equal to or higher than the min. working pressure to the port on the lock mechanism side.

■ When the piping at the side, where the lock mechanism is located, is long and thin, or when the speed controller is far away from the cylinder port, note that it takes time to engage the lock. Clogging in the silencer mounted on the EXH port of the valve may cause the same result.

3. Low friction SCG-U

⚠ CAUTION

■ Do not apply a lateral load to the cylinder.
Install the sliding guide so that it is not twisted.
- When the load or the resistance fluctuates, operation becomes unstable.
- For the long stroke, the piston rod's own weight causes the speed to become unstable. Install the guide before use.
- With a large difference between static friction and kinematic friction of the guide, operation becomes unstable.

■ Avoid using this product where vibration is present.
- The product will be adversely affected by vibration and operation will become unstable.

■ Avoid using in environments with water vapor or high humidity or in alkaline atmospheres.

4. Rotation-stop SCG-M

⚠ CAUTION

■ Do not use the product so as to apply rotation torque to the piston rod.
The bushing for the rotation lock may deform and significantly shorten the service life.

■ When fixing a workpiece onto the tip of the piston rod, retract the piston rod to the stroke end and apply a wrench to the section protruding from the rod's parallel section. Tighten so that torque is not applied to the cylinder body.

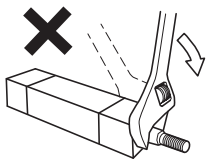

■ For the rotation-stop cylinder, the rotation torque that can be applied to the piston rod when fixing the workpiece on the end of the piston rod is as shown in the table below.
Note that the piston rod starts to spin around if the rotation torque exceeding this value is applied to the piston rod.

Allowable torque	ø32	ø40	ø50	ø63
N·m	0.25	0.45	0.45	0.45

Use/maintenance

1. Position locking SCG-Q

⚠ WARNING

- For safety purposes, prevent the load from falling under its own weight during maintenance.
- In the case of the cylinder with air cushion, if the air cushion needle at the lock mechanism side is tightened excessively, the piston bounds at the stroke end and the sleeve and stopper piston collide strongly, which may result in damage to the locking mechanism.
  Also, if the air cushion needle is opened too much, the piston bounces off at the stroke end, which may similarly damage the mechanism. Adjust the needle of the air cushion so that there is no bound.

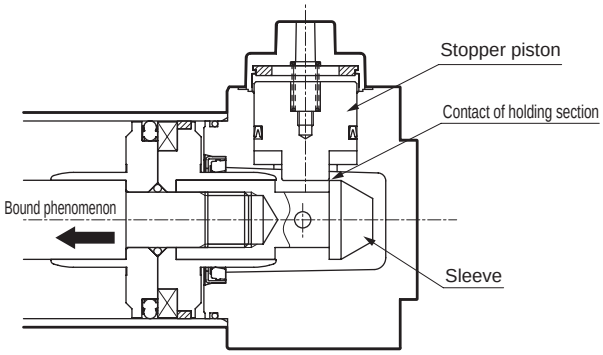

When stopping the piston with an external buffer device (shock absorber, etc.), adjust it similarly so that there is no bound.
Inspect the piston once or twice a year to make sure there is no damage to the retainer caused by this phenomenon.

⚠ CAUTION

- After the lock mechanism is manually operated, make sure to confirm manual operation and return the mechanism to the original state before use. Do not perform manual operation except for adjustment, as it is dangerous.
- When mounting or adjusting the cylinder, release the lock.
  If mounting work, etc., is done while the lock is engaged, the lock part may be damaged.
- Use the speed controller with meter-out.
  If the meter-in control is used, the lock may not be able to be released.
- At the side where the lock mechanism is attached, be sure to use the cylinder from the stroke end.
  If the cylinder piston does not reach the stroke end, the lock may not be engaged or the lock may not be able to be released.

- Manual override non-locking release method
  By screwing the release bolt into the stopper piston and pulling the bolt with a force of 20N or more for the distance traveled, the stopper piston will move and the lock will release. (when horizontally installed with no load or with the opposite side port pressurized). When the screw is released, the internal spring causes the stopper piston to return. When it fits into the piston rod groove again, the piston is locked.

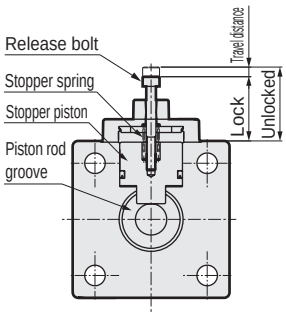

Bore size (mm)	Lock	Unlocked	Travel distance	Release bolt
ø32	19.5	22.5	3	M3x25
ø40	18	21	3	M3x25
ø50	26.5	30.5	4	M4x35
ø63	21.5	25.5	4	M4x35
ø80	19	23	4	M4x35
ø100	21.5	25.5	4	M4x35

- Manual override locking release method
  By rotating the round nut leftward (counterclockwise), the stopper piston moves and the lock is released.
  Rotating the round nut to the right to set it in the locked position causes the stopper piston to return. When it fits into the piston rod groove again, the piston is locked.

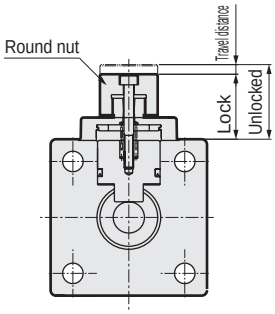

Bore size (mm)	Lock	Unlocked	Distance traveled
ø32	20	23	3
ø40	18.5	21.5	3
ø50	27	31	4
ø63	22	26	4
ø80	19.5	23.5	4
ø100	22	26	4

2. Low friction SCG-O

⚠ WARNING

- Smoking with hands smeared with the fluorine grease used for the O Series could generate harmful gases and cause physical harm.

3. Low friction SCG-U

⚠ CAUTION

- Do not disassemble the product. Once disassembled, the performance may not be retained.
  For this product, just the repair parts are not available.

MEMO

SCA2

Medium bore size cylinder

ø40/ø50/ø63/ø80/ø100

Standard

Overview

Medium bore size standard cylinders (ø40 to ø100) with the end covers fixed with tie rod on both sides. Wide range of choices. The most reliable series in the standard cylinders.

Features

Easy to modify to the type with switch

The cylinder is equipped with a magnet as standard, allowing modification to the type with switch by simply mounting the desired sensor switch.

Simple replacement of the mounting bracket

The adapter compatible with different mounting brackets enables easy replacement and helps efficient inventory management.

Lighter weight and higher corrosion resistance

Aluminum main parts including both end covers, piston and tube have enabled the lighter body with higher corrosion resistance and shock resistance.

CONTENTS

Series variation	444
Variation and option combination selection table	448
● Double acting/single rod (SCA2)	450
● Double acting/stroke adjustable (push) (SCA2-P)	472
● Double acting/stroke adjustable (pull) (SCA2-R)	480
● Double acting/heat resistance (SCA2-T)	488
● Double acting/position locking (SCA2-Q2)	494
● Double acting/low friction (SCA2-O) - Low friction at low pressure (0.2 MPa or less) -	526
● Double acting/low friction (SCA2-U) - Constant friction when pressurized -	534
● Double acting/double rod (SCA2-D)	540
● Double acting/back to back (SCA2-B)	548
● Double acting/2-stage (SCA2-W)	556
● Double acting/steel tube (SCA2-K)	564
● Double acting/low hydraulic (SCA2-H)	568
● Double acting/rubber scraper (SCA2-G)	576
● Double acting/coolant proof (SCA2-G2/G3)	584
● Double acting/coil scraper (SCA2-G1)/anti-spatter adherence (G4)	590
● Double acting/with valve (SCA2-V)	596
SCA2 Series common accessory dimensions	470
⚠ Safety precautions	616

The cylinder switches T2YH, T2YV, T3YH, and T3YV are scheduled for end of production at the end of December 2023.

Series variation

Medium bore size cylinder SCA2 Series

* For the environment-resistant/valve, refer to pages 576 and 613.

Variation	Model No. / JIS symbol	Bore size (mm)	Standard stroke (mm) 25	50	75	100	150	200	250	300	350	400	450	500	Min. stroke (mm)	Max. stroke (mm)	Available stroke (mm)	Custom stroke (per mm)	Basic 00
Double acting	SCA2	ø40/ø50	●	●	●	●	●	●	●	●	●	●	●	●	1	600	1600	1	●
																	2000		
		ø63															2500		
		ø80	●	●	●	●	●	●	●	●	●	●	●	●		700			●
		ø100	●	●	●	●	●	●	●	●	●	●	●	●		800			●
Double acting/stroke adjustable (push)	SCA2-P	ø40 to ø63	●	●	●	●	●	●	●	●	●	●	●	●	25	600	600	1	●
		ø80	●	●	●	●	●	●	●	●	●	●	●	●		700	700		●
		ø100	●	●	●	●	●	●	●	●	●	●	●	●		800	800		●
Double acting/stroke adjustable (pull)	SCA2-R	ø40 to ø63	●	●	●	●	●	●	●	●	●	●	●	●	25	600	600	1	●
		ø80	●	●	●	●	●	●	●	●	●	●	●	●		700	700		●
		ø100	●	●	●	●	●	●	●	●	●	●	●	●		800	800		●
Double acting/ heat resistant	SCA2-T	ø40 to ø63	●	●	●	●	●	●	●	●	●	●	●	●	1	600	600	1	●
		ø80	●	●	●	●	●	●	●	●	●	●	●	●		700	700		●
		ø100	●	●	●	●	●	●	●	●	●	●	●	●		800	800		●
Double acting/ position locking	SCA2-Q2	ø40 to ø63	●	●	●	●	●	●	●	●	●	●	●	●	5	600	600	1	●
		ø80	●	●	●	●	●	●	●	●	●	●	●	●		700	700		●
		ø100	●	●	●	●	●	●	●	●	●	●	●	●		800	800		●
Double acting/low friction (low pressure (≤ 0.2 MPa))	SCA2-O	ø40 to ø63	●	●	●	●	●	●	●	●	●	●	●	●	1	600	600	1	●
		ø80	●	●	●	●	●	●	●	●	●	●	●	●		700	700		●
		ø100	●	●	●	●	●	●	●	●	●	●	●	●		800	800		●
Double acting/low friction (constant friction when pressurized)	SCA2-U	40 to ø63	●	●	●	●	●	●	●	●	●	●	●	●	1	600	600	1	●
		ø80	●	●	●	●	●	●	●	●	●	●	●	●		700	700		●
		ø100	●	●	●	●	●	●	●	●	●	●	●	●		800	800		●
Double acting/ double rod	SCA2-D	ø40 to ø63	●	●	●	●	●	●	●	●	●	●	●	●	1	600	800	1	●
		ø80	●	●	●	●	●	●	●	●	●	●	●	●		700			●
		ø100	●	●	●	●	●	●	●	●	●	●	●	●		800			●
Double acting/ back to back	SCA2-B	ø40 to ø63	●	●	●	●	●	●	●	●	●	●	●	●	1	600	600	1	●
		ø80	●	●	●	●	●	●	●	●	●	●	●	●		700	700		●
		ø100	●	●	●	●	●	●	●	●	●	●	●	●		800	800		●
Double acting/2-stage	SCA2-W	ø40 to ø63	●	●	●	●	●	●	●	●	●	●	●	●	2	600	600	1	●
		ø80	●	●	●	●	●	●	●	●	●	●	●	●		700	700		●
		ø100	●	●	●	●	●	●	●	●	●	●	●	●		800	800		●
Double acting/ steel tube	SCA2-K	ø40	●	●	●	●	●	●	●	●	●	●	●	●	1	600	1600	1	●
		ø50	●	●	●	●	●	●	●	●	●	●	●	●			1900		●
		ø63																	
		ø80	●	●	●	●	●	●	●	●	●	●	●	●		700			●
		ø100	●	●	●	●	●	●	●	●	●	●	●	●		800			●
Double acting/ low hydraulic	SCA2-H	ø40 to ø63	●	●	●	●	●	●	●	●	●	●	●	●	1	600	600	1	●
		ø80	●	●	●	●	●	●	●	●	●	●	●	●		700	700		●
		ø100	●	●	●	●	●	●	●	●	●	●	●	●		800	800		●

●: Standard, ◎: Option, ○: Made to order, ▒ : Not available

	Mounting												Cushion				Option						Accessory							
	Axial foot	Rod side flange	Head side flange	Head side special flange	Eye bracket	Clevis bracket	Intermediate trunnion	Rod side trunnion	Head side trunnion	Intermediate supporting hole trunnion	Rod side hole trunnion	Head side hole trunnion	Without cushion	Both sides cushioned	Rod side cushioned	Head side cushioned	Bellows (100°C)	Bellows (250°C)	Piston rod material (stainless steel)	Cushion needle position S	Cushion needle position T	Copper and PTFE free	Rod eye	Rod clevis	Eye bracket	Clevis bracket	Eye bracket	Trunnion No. 2 bracket	Switch	Page
	LB	FA	FB	FC	CA	CB	TC	TA	TB	TF	TD	TE	N	B	R	H	J	L	M	S	T	P6	I	Y	B1	B2	B3	B4		
	●	●	●	●	●	●	●	●	●	●	●	●	●	●	●	●	◎	◎	◎	◎	◎	◎	◎	◎	◎	◎	◎	◎	◎	450
	●	●	●	●	●	●	●	●	●	●	●	●	●	●	●	●	◎	◎	◎	◎	◎	◎	◎	◎	◎	◎	◎	◎		
	●	●	●	●	●	●	●	●	●	●	●	●	●	●	●	●	◎	◎	◎	◎	◎	◎	◎	◎	◎	◎	◎	◎		
	●	●	●	▒	▒	▒	●	●	●	●	●	●	●	●	●	●	◎	◎	◎	◎	◎	○	◎	◎	▒	▒	▒	◎	◎	472
	●	●	●	▒	▒	▒	●	●	●	●	●	●	●	●	●	●	◎	◎	◎	◎	◎	○	◎	◎	▒	▒	▒	◎		
	●	●	●	▒	▒	▒	●	●	●	●	●	●	●	●	●	●	◎	◎	◎	◎	◎	○	◎	◎	▒	▒	▒	◎		
	●	●	▒	▒	▒	▒	●	●	●	●	●	●	●	●	●	●	◎	◎	◎	◎	◎	○	◎	◎	▒	▒	▒	◎	◎	480
	●	●	▒	▒	▒	▒	●	●	●	●	●	●	●	●	●	●	◎	◎	◎	◎	◎	○	◎	◎	▒	▒	▒	◎		
	●	●	▒	▒	▒	▒	●	●	●	●	●	●	●	●	●	●	◎	◎	◎	◎	◎	○	◎	◎	▒	▒	▒	◎		
	●	●	●	●	●	●	●	●	●	●	●	●	●	●	●	●	▒	◎	◎	◎	◎	○	◎	◎	◎	◎	◎	◎	◎	488
	●	●	●	●	●	●	●	●	●	●	●	●	●	●	●	●	▒	◎	◎	◎	◎	○	◎	◎	◎	◎	◎	◎		
	●	●	●	●	●	●	●	●	●	●	●	●	●	●	●	●	▒	◎	◎	◎	◎	○	◎	◎	◎	◎	◎	◎		
	●	●	●	●	●	●	●	●	●	●	●	●	●	●	●	●	○	○	◎	◎	▒	○	◎	◎	◎	◎	◎	◎	◎	494
	●	●	●	●	●	●	●	●	●	●	●	●	●	●	●	●	○	○	◎	◎	▒	○	◎	◎	◎	◎	◎	◎		
	●	●	●	●	●	●	●	●	●	●	●	●	●	●	●	●	○	○	◎	◎	▒	○	◎	◎	◎	◎	◎	◎		
	●	●	●	●	●	●	●	●	●	●	●	●	●	▒	▒	▒	▒	▒	◎	▒	▒	○	◎	◎	◎	◎	◎	◎	◎	526
	●	●	●	●	●	●	●	●	●	●	●	●	●	▒	▒	▒	▒	▒	◎	▒	▒	○	◎	◎	◎	◎	◎	◎		
	●	●	●	●	●	●	●	●	●	●	●	●	●	▒	▒	▒	▒	▒	◎	▒	▒	○	◎	◎	◎	◎	◎	◎		
	●	●																												
	●	●	●	●	●	●	●	●	●	●	●	●	●	▒	▒	▒	▒	▒	◎	▒	▒	▒	◎	◎	◎	◎	◎	◎	◎	534
	●	●																												
	●	●	●	▒	▒	▒	●	●	●	●	●	●	●	●	●	●	◎	◎	◎	◎	◎	○	◎	◎	▒	▒	▒	◎		
	●	●	●	▒	▒	▒	●	●	●	●	●	●	●	●	●	●	◎	◎	◎	◎	◎	○	◎	◎	▒	▒	▒	◎	◎	540
	●	●	●	▒	▒	▒	●	●	●	●	●	●	●	●	●	●	◎	◎	◎	◎	◎	○	◎	◎	▒	▒	▒	◎		
	●	●	●	▒	▒	▒	●	●	●	●	●	●	●	●	●	●	◎	◎	◎	◎	◎	○	◎	◎	▒	▒	▒	◎		
	●	●	▒	▒	▒	▒	▒	●	●	▒	●	●	●	●	●	●	◎	◎	◎	◎	◎	○	◎	◎	▒	▒	▒	◎		
	●	●	▒	▒	▒	▒	▒	●	●	▒	●	●	●	●	●	●	◎	◎	◎	◎	◎	○	◎	◎	▒	▒	▒	◎	◎	548
	●	●	▒	▒	▒	▒	▒	●	●	▒	●	●	●	●	●	●	◎	◎	◎	◎	◎	○	◎	◎	▒	▒	▒	◎		
	●	●	▒	▒	▒	▒	▒	●	●	▒	●	●	●	●	●	●	◎	◎	◎	◎	◎	○	◎	◎	▒	▒	▒	◎		
	●	●	●	●	●	●	▒	●	●	▒	●	●	●	●	●	●	◎	◎	◎	◎	◎	○	◎	◎	◎	◎	◎	◎		
	●	●	●	●	●	●	▒	●	●	▒	●	●	●	●	●	●	◎	◎	◎	◎	◎	○	◎	◎	◎	◎	◎	◎	◎	556
	●	●	●	●	●	●	▒	●	●	▒	●	●	●	●	●	●	◎	◎	◎	◎	◎	○	◎	◎	◎	◎	◎	◎		
	●	●	●	●	●	●	▒	●	●	▒	●	●	●	●	●	●	◎	◎	◎	◎	◎	○	◎	◎	◎	◎	◎	◎		
	●	●	●	●	●	●	●	●	●	▒	▒	▒	●	●	●	●	◎	◎	◎	◎	◎	○	◎	◎	◎	◎	◎	◎		
	●	●	●	●	●	●	●	●	●	●	●	●	●	●	●	●	◎	◎	◎	◎	◎	○	◎	◎	◎	◎	◎	◎		564
	●	●	●	●	●	●	●	●	●	●	●	●	●	●	●	●	◎	◎	◎	◎	◎	○	◎	◎	◎	◎	◎	◎		
	●	●	●	●	●	●	●	●	●	●	●	●	●	●	●	●	◎	◎	◎	◎	◎	○	◎	◎	◎	◎	◎	◎		
	●	●	●	●	●	●	●	●	●	●	●	●	●	●	●	●	◎	◎	◎	◎	◎	○	◎	◎	◎	◎	◎	◎		
	●	●	●	●	●	●	●	●	●	●	●	●	●	●	●	●	◎	◎	◎	◎	◎	○	◎	◎	◎	◎	◎	◎	◎	568
	●	●	●	●	●	●	●	●	●	●	●	●	●	●	●	●	◎	◎	◎	◎	◎	○	◎	◎	◎	◎	◎	◎		
	●	●	●	●	●	●	●	●	●	●	●	●	●	●	●	●	◎	◎	◎	◎	◎	○	◎	◎	◎	◎	◎	◎		

Note: ø40 is not available for hole trunnion (TF, TD and TE).
Note: TA mounting with R position locking mechanism is not available.
Note: TB mounting with H position locking mechanism is not available.

Series variation

Medium bore size cylinder SCA2 Series

Variation	Model No. / JIS symbol	Bore size (mm)	Standard stroke (mm) 25	50	75	100	150	200	250	300	350	400	450	500	Min. stroke (mm)	Max. stroke (mm)	Available stroke (mm)	Custom stroke (per mm)	Basic 00
Double acting/ rubber scraper	SCA2-G	ø40													1	600	1600	1	●
		ø50	●	●	●	●	●	●	●	●	●	●	●	●			2000		
		ø63															2500		
		ø80	●	●	●	●	●	●	●	●	●	●	●	●		700			●
		ø100	●	●	●	●	●	●	●	●	●	●	●	●		800			●
Double acting/ coolant proof	SCA2-G2/G3	ø40													1	600	1600	1	●
		ø50	●	●	●	●	●	●	●	●	●	●	●	●			2000		
		ø63															2500		
		ø80	●	●	●	●	●	●	●	●	●	●	●	●		700			●
		ø100	●	●	●	●	●	●	●	●	●	●	●	●		800			●
Double acting/ coil scraper Double acting/ anti-spatter adherence	SCA2-G1/G4	ø40													1	600	1600	1	●
		ø50	●	●	●	●	●	●	●	●	●	●	●	●			2000		
		ø63															2500		
		ø80	●	●	●	●	●	●	●	●	●	●	●	●		700			●
		ø100	●	●	●	●	●	●	●	●	●	●	●	●		800			●
Double acting/ with valve	SCA2-V 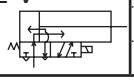	ø40 to ø63		●	●	●	●	●	●	●	●	●	●	●	50	600	600	1	●
		ø80		●	●	●	●	●	●	●	●	●	●	●		700	700		●
		ø100		●	●	●	●	●	●	●	●	●	●	●		800	800		●

●: Standard, ◎: Option, ○: Made to order, ▒ : Not available

Mounting												Cushion				Option						Accessory						Switch	Page
Axial foot	Rod side flange	Head side flange	Head side special flange	Eye bracket	Clevis bracket	Intermediate trunnion	Rod side trunnion	Head side trunnion	Intermediate supporting hole trunnion	Rod side hole trunnion	Head side hole trunnion	Without cushion	Both sides cushioned	Rod side cushioned	Head side cushioned	Bellows (100°C)	Bellows (250°C)	Piston rod material (stainless steel)	Cushion needle position S	Cushion needle position T	Copper and PTFE free	Rod eye	Rod clevis	Eye bracket	Clevis bracket	Eye bracket	Trunnion No. 2 bracket		
LB	FA	FB	FC	CA	CB	TC	TA	TB	TF	TD	TE	N	B	R	H	J	L	M	S	T	P6	I	Y	B1	B2	B3	B4		
●	●	●	●	●	●	●	●	●	●	●	●	●	●	●	●	○	○	◎	◎	◎	○	◎	◎	◎	◎	◎	◎	◎	576
●	●	●	●	●	●	●	●	●	●	●	●	●	●	●	●	○	○	◎	◎	◎	○	◎	◎	◎	◎	◎	◎		
●	●	●	●	●	●	●	●	●	●	●	●	●	●	●	●	○	○	◎	◎	◎	○	◎	◎	◎	◎	◎	◎		
●	●	●	●	●	●	●	●	●	●	●	●	●	●	●	●	▒	▒	●	◎	◎	▒	◎	◎	◎	◎	◎	◎	◎	584
●	●	●	●	●	●	●	●	●	●	●	●	●	●	●	●	▒	▒	●	◎	◎	▒	◎	◎	◎	◎	◎	◎		
●	●	●	●	●	●	●	●	●	●	●	●	●	●	●	●	▒	▒	●	◎	◎	▒	◎	◎	◎	◎	◎	◎		
●	●	●	●	●	●	●	●	●	●	●	●	●	●	●	●	▒	▒	○	◎	◎	▒	◎	◎	◎	◎	◎	◎	◎	590
●	●	●	●	●	●	●	●	●	●	●	●	●	●	●	●	▒	▒	○	◎	◎	▒	◎	◎	◎	◎	◎	◎		
●	●	●	●	●	●	●	●	●	●	●	●	●	●	●	●	▒	▒	○	◎	◎	▒	◎	◎	◎	◎	◎	◎		
●	●	●	▒	●	●	●	●	▒	●	●	▒	●	●	●	●	◎	◎	◎	◎	◎	▒	◎	◎	◎	◎	◎	◎	◎	596
●	●	●	▒	●	●	●	●	▒	●	●	▒	●	●	●	●	◎	◎	◎	◎	◎	▒	◎	◎	◎	◎	◎	◎		
●	●	●	▒	●	●	●	●	▒	●	●	▒	●	●	●	●	◎	◎	◎	◎	◎	▒	◎	◎	◎	◎	◎	◎		

Note: ø40 is not available for hole trunnion (TF, TD and TE).

Variation and option combination selection table

● : Standard
◎ : Option
○ : Available (made-to-order product)
△ : Available depending on conditions (Contact CKD.)
x : Not available
H : Head side position locking only (made-to-order product)
R : Rod side position locking only (made-to-order product)

	Category	Variation																					Port thread		Option					
		Double acting basic	Double acting double rod	Back to back	Double piston	Adjustable stroke Push	Adjustable stroke Pull	Position locking	With valve	Cylinder tube Steel pipe	Low hydraulic	Heat resistance (120°C)	Low friction (at low pressure)	Low friction (when pressurized)	Rubber scraper	Coil scraper	Coolant proof scraper (NBR)	Coolant proof scraper (FKM)	Anti-spatter adherence	With cylinder switch	Strong magnetic field proof/cylinder switch	Heat resistant with cylinder switch	NPT	G	Polyolefin with bellows	Silicone rubber with bellows	Piston rod material (stainless steel)	Cushion needle position specification	Copper and PTFE free	Specify piston rod end form
	Code	None	D	B	W	P	R	Q2	V	K	H	T	O	U	G	G1	G2	G3	G4	None	L2	L2T	N	G	J	L	M	R, S, T	P6	N**
Variation	Double acting basic	Blank																		●			○	○	*7	*7	◎	◎	◎	○
Variation	Double acting double rod	D		x	*1	x	x	○	△	○	△	△	*2	*2	○	○	○	○	○	●	○	○	○	○	◎	◎	◎	◎	○	○
Variation	Back to back	B			x	x	x	○	△	○	○	○	○	△	○	○	○	○	○	●	○	○	○	○	◎	◎	◎	◎	○	○
Variation	Double piston	W				x	x	x	*3	○	○	○	*4	*4	○	○	○	○	○	●	○	○	○	○	◎	◎	◎	◎	○	○
Variation	Adjustable stroke Push	P					x	H	○	○	△	△	*2	*2	△	△	△	△	△	●	○	○	○	○	◎	◎	◎	◎	○	○
Variation	Adjustable stroke Pull	R						R	○	○	x	△	○	○	○	○	○	○	○	●	○	○	○	○	◎	◎	◎	◎	○	○
Variation	Position locking	Q2							x	○	x	x	△	x	△	△	△	△	△	●	○	x	○	○	△	△	◎	◎	○	○
Variation	With valve	V								○	x	x	x	x	○	○	x	x	○	●	○	x	○	○	◎	◎	◎	◎	x	○
Variation	Cylinder tube Steel pipe	K									○	○	○	△	○	○	x	x	○	x	x	x	○	○	◎	◎	◎	◎	○	○
Variation	Low hydraulic	H										x	x	x	△	x	x	x	x	●	○	x	○	○	◎	◎	◎	◎	○	○
Variation	Heat resistance (120°C)	T											x	x	x	○	x	x	x	x	x		○	○	x	◎	◎	◎	○	○
Variation	Low friction (low pressure→low friction)	O												x	x	x	x	x	x	●	○	x	○	○	*5	*5	◎		○	○
Variation	Low friction (pressurized→constant friction)	U													x	x	x	x	x	●	○	x	○	○	x	x	◎		x	○
Variation	Rubber scraper	G																		●	○	x	○	○	○	○	◎	◎	○	○
Variation	Coil scraper	G1																		●	○	○	○	○	x	x	○	◎	x	○
Variation	Coolant proof scraper (NBR)	G2																		●	○	x	○	○	x	x	●	◎	○	○
Variation	Coolant proof scraper (FKM)	G3																		●	○	x	○	○	x	x	●	◎	○	○
Variation	Anti-spatter adherence	G4																		●	○	x	○	○	x	x	○	◎	x	○
Variation	With cylinder switch	Blank																			x	x	○	○	◎	◎	◎	◎	○	○
Variation	Strong magnetic field proof/cylinder switch	L2																				x	○	○	○	○	○	○	○	○
Variation	Heat resistant with cylinder switch	L2T																					○	○	○	○	○	○	○	○
Port thread	NPT	N																							◎	◎	◎	◎	○	○
Port thread	G	G																							◎	◎	◎	◎	○	○
Option	Polyolefin with bellows	J																									○	○	○	○
Option	Silicone rubber with bellows	L																									○	○	○	○
Option	Piston rod material (stainless steel)	M																										○	○	○
Option	Cushion needle position specification	R, S, T																											○	○
Option	Copper and PTFE free	P6																												○
Option	Specify piston rod end form	N**																												
Accessory	Cylinder switch	Separate list	◎	◎	◎	◎	◎	◎	◎	x	◎	x	◎	◎	◎	◎	◎	◎	◎	◎	◎	◎	○	○	◎	◎	◎	◎	◎	○
Accessory	Rod eye	I	◎	◎	◎	◎	◎	◎	◎	◎	◎	◎	◎	◎	◎	◎	◎	◎	◎	◎	◎	◎	○	○	◎	◎	◎	◎	◎	△
Accessory	Rod clevis	Y	◎	◎	◎	◎	◎	◎	◎	◎	◎	◎	◎	◎	◎	◎	◎	◎	◎	◎	◎	◎	○	○	◎	◎	◎	◎	◎	△
Accessory	Eye bracket	B1	◎	x	x	◎	x	x	◎	◎	◎	◎	◎	◎	◎	◎	◎	◎	◎	◎	◎	◎	○	○	◎	◎	◎	◎	◎	○
Accessory	Clevis bracket	B2	◎	x	x	◎	x	x	◎	◎	◎	◎	◎	◎	◎	◎	◎	◎	◎	◎	◎	◎	○	○	◎	◎	◎	◎	◎	○
Accessory	Eye bracket	B3	◎	x	x	◎	x	x	◎	◎	◎	◎	◎	◎	◎	◎	◎	◎	◎	◎	◎	◎	○	○	◎	◎	◎	◎	◎	○
Accessory	Trunnion bracket	B4	◎	◎	◎	◎	◎	◎	◎	◎	◎	◎	◎	◎	◎	◎	◎	◎	◎	◎	◎	◎	○	○	◎	◎	◎	◎	◎	○

*1 : S2 side only
*2 : Increasing rod sealant and bearings leads to a larger resistance and thus causes a change in the min. starting pressure.
*3 : The valve installation position differs from that of the standard.
*4 : The min. starting pressure on the S2 side will be larger than that of the standard value of the low friction. Contact CKD for details.
*5 : The min. starting pressure is larger due to the resistance of expansion and contraction of the bellows. Contact CKD for details.
*6 : For P7 and P71 New Fine, refer to “Components for clean room specifications” (catalog No. CB-033SA). For G2 and G3 coolant proof scraper, refer to “Guide of pneumatic devices compatible with coolants” (CC-N-375A).
*7 : The max. stroke available for ø63 to ø100 bore size models with bellows is 2000 mm.

[How to order]

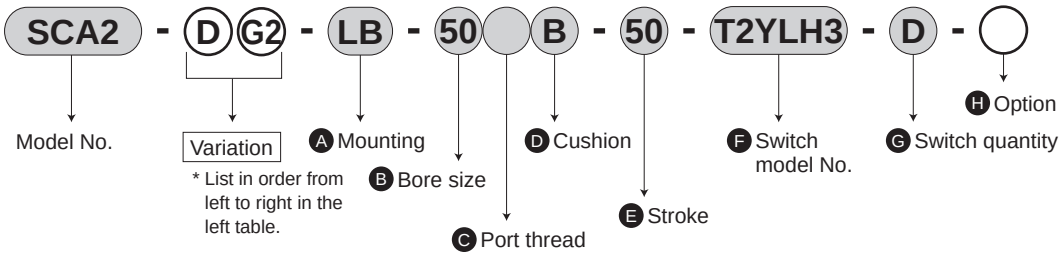

Model No.: Medium bore size cylinder

● Variation	: Double rod/coolant proof scraper
A Mounting	: Axial foot
B Bore size	: ø50 mm
C Port thread	: Rc thread
D Cushion	: Both sides cushioned
E Stroke	: 50 mm
F Switch model No.	: Coolant proof switch, 3 m lead wire
G Switch quantity	: 2
H Option	: None

*1: The back to back includes two cylinders. Specify the model No. as below when ordering variation.
For S1 variations only, insert the variation code before the stroke of S1.
(Example) SCA2-B-40-O100-150: Only S1 is the low friction.
For S2 variations only, insert the variation code before the stroke of S2.
(Example) SCA2-B-40-100-O150: Only S2 is the low friction.
When ordering the same variation for S1 and S2, insert the variation code before the bore size.
(Example) SCA2-BO-40-100-150: Both S1 and S2 are the low friction.

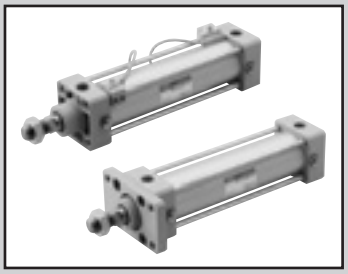

Medium bore size cylinder
Double acting/single rod/with switch

SCA2 Series

● Bore size: ø40/ø50/ø63/ø80/ø100

JIS symbol

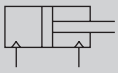

RoHS CAD

Specifications

Item		SCA2/SCA2-L2				
Bore size mm		ø40	ø50	ø63	ø80	ø100
Actuation		Double acting				
Working fluid		Compressed air				
Max. working pressure MPa		1.0 (≈150 psi, 10 bar)				
Min. working pressure MPa		0.05 (≈7.3 psi, 0.5 bar)				
Proof pressure MPa		1.6 (≈230 psi, 16 bar)				
Ambient temperature °C		-10 (14°F) to 60 (140°F) (no freezing)				
Port size		Rc1/4	Rc3/8		Rc1/2	
Stroke tolerance mm		$^{+0.9}_{0}$ (to 360), $^{+1.4}_{0}$ (to 800)				
Working piston speed mm/s		50 to 1000 (Operate within the allowable absorbed energy.)				
Cushion		Air cushion				
Effective air cushion length mm		14.6	16.6	16.6	20.6	23.6
Lubrication		Not required (use turbine oil class 1 ISO VG32 if necessary for lubrication)				
Allowable absorbed energy J	Cushioned	4.29	8.37	15.8	27.9	49.8
	Without cushion	0.067	0.079	0.079	0.201	0.301
		Without any cushion, this product cannot absorb large energy generated by an external load. We recommend using an external shock absorber.				

Stroke

Bore size (mm)	Standard stroke (mm)	Max. stroke (mm)	Available stroke (mm)	Min. stroke (mm)
ø40	25/50/75/100/150/200/250/300/350/400/450/500	600	1600	1
ø50			2000	
ø63			2500 *3	
ø80		700		
ø100		800		

*1 : The custom stroke is available in 1 mm increments.
*2 : If max. stroke is exceeded, product specifications may not be satisfied depending on the conditions. Refer to Ending Page 69.
*3 : The max. stroke available for ø63 to ø100 bore size models with bellows is 2000 mm.

Min. stroke with switch

● T0/T5 min. stroke with switches

	Different surface mounting				Same surface mounting				Center trunnion mounting				Rod side trunnion mounting No position detection at rod side stroke end.	Head side trunnion mounting No position detection at head side stroke end.
Switch quantity	1	2	3	4	1	2	3	4	1	2	3	4	1	1
ø40	20(10)	20(20)	40(40)	60(60)	20(10)	60(45)	105(75)	150(105)	110(110)	110(110)	175(145)	175(145)	50(50)	50(50)
ø50	15(10)	20(20)	40(40)	60(60)	15(10)	20(20)	65(50)	65(60)	135(135)	135(135)	135(135)	135(135)	60(60)	60(60)
ø63	15(10)	20(20)	40(40)	60(60)	15(10)	20(20)	70(55)	70(60)	110(95)	110(95)	110(100)	110(100)	50(45)	50(45)
ø80	15(15)	25(25)	45(45)	65(65)	15(15)	25(25)	70(55)	70(65)	115(85)	115(85)	115(105)	115(105)	55(40)	55(40)
ø100	15(15)	25(25)	45(45)	70(70)	15(15)	25(25)	70(55)	70(70)	125(95)	125(95)	125(115)	125(115)	60(45)	60(45)

*1: The values in ( ) are of T*V (L-shaped lead wire).
*2: When the stroke is 15 mm or less, the two switches could turn ON at the same time. In this case, adjust switch mounting positions to be as far apart as possible.

● T8 min. stroke with switch

	Different surface mounting				Same surface mounting				Center trunnion mounting				Rod side trunnion mounting No position detection at rod side stroke end.	Head side trunnion mounting No position detection at head side stroke end.
Switch quantity	1	2	3	4	1	2	3	4	1	2	3	4	1	1
ø40	15(10)	20(20)	40(40)	60(60)	15(10)	50(35)	95(65)	140(95)	95(85)	95(85)	155(125)	155(125)	45(40)	45(40)
ø50	10(10)	20(20)	40(40)	60(60)	10(10)	20(20)	70(55)	70(60)	115(115)	115(115)	135(135)	135(135)	50(50)	50(50)
ø63	10(10)	20(20)	40(40)	60(60)	10(10)	20(20)	70(55)	70(60)	95(75)	95(75)	110(110)	110(110)	45(35)	45(35)
ø80	15(15)	25(25)	45(45)	65(65)	15(15)	25(25)	70(55)	70(65)	100(70)	100(70)	115(115)	115(115)	50(35)	50(35)
ø100	15(15)	25(25)	45(45)	65(65)	15(15)	25(25)	70(55)	70(65)	110(80)	110(80)	125(125)	125(125)	55(40)	55(40)

*1: The values in ( ) are of T*V (L-shaped lead wire).
*2: When the stroke is 15 mm or less, the two switches could turn ON at the same time. In this case, adjust switch mounting positions to be as far apart as possible.

Min. stroke with switch

● T2/T3 min. stroke with switches

	Different surface mounting				Same surface mounting				Center trunnion mounting				Rod side trunnion mounting No position detection at rod side stroke end.	Head side trunnion mounting No position detection at head side stroke end.
Switch quantity	1	2	3	4	1	2	3	4	1	2	3	4	1	1
ø40	20(10)	20(15)	25(25)	40(40)	20(10)	60(45)	105(75)	150(105)	105(75)	105(75)	165(135)	165(135)	50(35)	50(35)
ø50	15(10)	15(15)	25(25)	40(40)	15(10)	15(15)	60(45)	60(45)	105(75)	105(75)	105(75)	105(75)	45(30)	45(30)
ø63	15(10)	15(15)	25(25)	40(40)	15(10)	15(15)	60(45)	60(45)	110(80)	110(80)	110(85)	110(85)	50(35)	50(35)
ø80	15(10)	15(15)	30(30)	45(45)	15(10)	15(15)	60(45)	60(45)	115(85)	115(85)	115(90)	115(90)	55(40)	55(40)
ø100	10(10)	15(15)	30(30)	45(45)	10(10)	15(15)	60(45)	60(45)	125(95)	125(95)	125(100)	125(100)	60(45)	60(45)

*1: The values in ( ) are of T*V (L-shaped lead wire).
*2: When the stroke is 15 mm or less, the two switches could turn ON at the same time. In this case, adjust switch mounting positions to be as far apart as possible.

● T1/T2Y/T3Y/T2YD min. stroke with switches

	Different surface mounting				Same surface mounting				Center trunnion mounting				Rod side trunnion mounting No position detection at rod side stroke end.	Head side trunnion mounting No position detection at head side stroke end.
Switch quantity	1	2	3	4	1	2	3	4	1	2	3	4	1	1
ø40	20(10)	20(15)	25(25)	40(40)	20(10)	60(45)	105(75)	150(105)	105(75)	105(75)	165(135)	165(135)	50(35)	50(35)
ø50	15(10)	15(15)	25(25)	40(40)	15(10)	15(15)	60(45)	60(45)	100(70)	100(70)	100(75)	100(75)	45(30)	45(30)
ø63	15(10)	15(15)	25(25)	40(40)	15(10)	15(15)	60(45)	60(45)	105(75)	105(75)	105(85)	105(85)	50(35)	50(35)
ø80	15(10)	15(15)	30(30)	45(45)	15(10)	15(15)	60(45)	60(45)	110(80)	110(80)	110(90)	110(90)	55(40)	55(40)
ø100	10(10)	15(15)	30(30)	45(45)	10(10)	15(15)	60(45)	60(45)	120(90)	120(90)	120(100)	120(100)	60(45)	60(45)

*1: The values in ( ) are of T*V (L-shaped lead wire). T2YD does not have an L-shaped lead wire (V).
*2: When the stroke is 15 mm or less, the two switches could turn ON at the same time. In this case, adjust switch mounting positions to be as far apart as possible.

● T2W/T3W min. stroke with switches

	Different surface mounting				Same surface mounting				Center trunnion mounting				Rod side trunnion mounting No position detection at rod side stroke end.	Head side trunnion mounting No position detection at head side stroke end.
Switch quantity	1	2	3	4	1	2	3	4	1	2	3	4	1	1
ø40	20(5)	20(10)	20(15)	25(25)	20(5)	65(50)	110(80)	155(110)	110(80)	110(80)	170(140)	170(140)	50(35)	50(35)
ø50	20(5)	20(10)	20(15)	20(20)	20(5)	20(10)	65(40)	65(40)	110(80)	110(80)	110(80)	110(80)	50(35)	50(35)
ø63	20(5)	20(10)	20(15)	25(25)	20(5)	20(10)	65(40)	65(40)	115(85)	115(85)	115(85)	115(85)	55(40)	55(40)
ø80	15(5)	15(10)	15(15)	25(25)	15(5)	15(10)	60(40)	60(40)	120(90)	120(90)	120(90)	120(90)	55(40)	55(40)
ø100	10(5)	10(10)	20(20)	25(25)	10(5)	10(10)	60(40)	60(40)	130(100)	130(100)	130(100)	130(100)	60(45)	60(45)

*1: The values in ( ) are of T*V (L-shaped lead wire).
*2: When the stroke is 15 mm or less, the two switches could turn ON at the same time. In this case, adjust switch mounting positions to be as far apart as possible.

SCP*3
CMK2
CMA2
SCM
SCG
SCA2
SCS2
CKV2
CAV2/ COVP/N2
SSD2
SSG
SSD
CAT
MDC2
MVC
SMG
MSD/ MSDG
FC*
STK
SRL3
SRG3
SRM3
SRT3
MRL2
MRG2
SM-25
ShkAbs
FJ
FK
Spd Contr
Ending

Switch specifications (T-switch)

● 1-color/2-color LED/for AC magnetic field proof

Item	2-wire proximity	2-wire proximity			3-wire proximity				2-wire reed							2-wire proximity
	T1H/ T1V	T2H/T2V/ T2JH/T2JV	T2YH/ T2YV	T2WH/ T2WV	T3H/ T3V	T3PH/ T3PV	T3YH/ T3YV	T3WH/ T3WV	T0H/T0V		T5H/T5V		T8H/T8V			T2YD (*4) T2YDT
Applications	Programming controller relay, compact solenoid valve	Dedicated for programmable controller			For programmable controller, relay				For programmable controller, relay		For programmable controller, relay (no lamp), serial		For programmable controller, relay			Dedicated for programmable controller
Output method	-				NPN output	PNP output	NPN output	NPN output	-							
Pwr. supp. V.	-				10 to 28 VDC				-							
Load voltage	85 to 265 VAC	10 to 30 VDC		24 VDC ±10%	30 VDC or less				12/24 VDC	110 VAC	5/12/24 VDC	110 VAC	12/24 VDC	110 VAC	220 VAC	24 VDC ±10%
Load current	5 to 100 mA	5 to 20 mA (*3)			100 mA or less		50 mA or less		5 to 50 mA	7 to 20 mA	50 mA or less	20 mA or less	5 to 50 mA	7 to 20 mA	7 to 10 mA	5 to 20 mA
Indicator	LED (Lit when ON)	LED (Lit when ON)	Red/green LED (Lit when ON)	Red/green LED (Lit when ON)	LED (Lit when ON)	Yellow LED (Lit when ON)	Red/green LED (Lit when ON)	Red/green LED (Lit when ON)	LED (Lit when ON)		No indicator lamp		LED (Lit when ON)			Red/green LED (Lit when ON)
Leakage current	≤ 1 mA at 100 VAC, ≤ 2 mA at 200 VAC	1 mA or less			10 μA or less				0 mA							1 mA or less
Weight g	1 m:33 3 m:87 5 m:142	1 m:18 3 m:49 5 m:80	1 m:33 3 m:87 5 m:142	1 m:18 3 m:49 5 m:80	1 m:18 3 m:49 5 m:80		1 m:33 3 m:87 5 m:142	1 m:18 3 m:49 5 m:80	1 m:18 3 m:49 5 m:80				1 m:33 3 m:87 5 m:142			1 m:61 3 m:166 5 m:272

*1 : Refer to Ending Page 1 for detailed switch specifications and dimensions.
*2 : Switches other than the above models, such as switches with connectors, are also available. Refer to Ending Page 1.
*3 : Max. load current: 20 mA at 25°C. The current is lower than 20 mA if the operating ambient temperature around the switch is higher than 25˚C. (5 to 10 mA at 60°C)
*4 : Switch for AC magnetic field (T2YD/T2YDT) cannot be used in DC magnetic field.

Switch specifications (H switch)

Item	Strong magnetic field proof, reed 2-wire		
	H0		H0Y (2-color LED)
Applications	Relay, programmable controller		Dedicated for programmable controller
Load voltage/ current	12/24 VDC 5 to 50 mA	110 VAC 7 to 20 mA	24 VDC 5 to 20 mA
Indicator	Green LED lit when ON		Red/green LED - Lit when ON
Leakage current	10 μA or less		
Weight g	1 m:76 3 m:181 5 m:289		

*1 : Refer to Ending Page 1 for other switch specifications.
*2 : Max. load current of 20 mA is applied at 25°C. The current is lower than 20 mA if the operating ambient temperature around the switch is higher than 25˚C. (5 to 10 mA at 60°C)

Cylinder weight

(Unit: kg)

Bore size (mm)	Product weight when stroke (S) = 0 mm							Switch weight	Mounting bracket weight		Added weight/ S = 100 mm
	Basic (00)	Foot (LB)	Flange (FA, FB)	Special flange (FC)	Eye bracket (CA)	Clevis bracket (CB)	Trunnion (TA, TB, TC)		T type	H type	
ø40	0.83	1.00	1.24	0.92	1.15	1.19	1.21	Refer to the weight in the switch specifications.	0.024	0.028	0.39
ø50	1.20	1.45	1.69	1.31	1.58	1.61	1.74		0.022	0.026	0.46
ø63	1.60	1.97	2.69	1.78	2.17	2.22	2.45		0.020	0.024	0.50
ø80	2.60	3.34	4.46	2.96	3.87	4.08	3.94		0.026	0.029	0.90
ø100	4.20	5.11	6.94	4.75	5.84	6.02	6.77		0.024	0.028	1.12

(Example) Product weight of SCA2-LB-50B-200-TOH-D

- Product weight for 0 mm stroke ····· 1.45 kg
- Additional weight for 200 mm stroke ····· 0.46 x $\frac{200}{100}$ = 0.92 kg
- Weight of 2 TOH switches ····· 0.018 x 2 = 0.036 kg
- Weight of 2 mounting brackets ····· 0.022 x 2 = 0.044 kg
- Product weight ····· 1.45 + 0.92 + 0.036 + 0.044 = 2.450 kg

Oil-prohibited specifications

(Ending Page 132)

● Grease splash prevented

SCA2-……-**P12**

Theoretical thrust table

(Unit: N)

Bore size (mm)	Operating direction	Working pressure MPa											
		0.05	0.1	0.15	0.2	0.3	0.4	0.5	0.6	0.7	0.8	0.9	1.0
ø40	Push	62.8	$1.26x10^2$	$1.88x10^2$	$2.51x10^2$	$3.77x10^2$	$5.03x10^2$	$6.28x10^2$	$7.54x10^2$	$8.80x10^2$	$1.01x10^3$	$1.13x10^3$	$1.26x10^3$
	Pull	52.8	$1.06x10^2$	$1.58x10^2$	$2.11x10^2$	$3.17x10^2$	$4.22x10^2$	$5.28x10^2$	$6.33x10^2$	$7.39x10^2$	$8.44x10^2$	$9.50x10^2$	$1.06x10^3$
ø50	Push	98.2	$1.96x10^2$	$2.95x10^2$	$3.93x10^2$	$5.89x10^2$	$7.85x10^2$	$9.82x10^2$	$1.18x10^3$	$1.37x10^3$	$1.57x10^3$	$1.77x10^3$	$1.96x10^3$
	Pull	82.5	$1.65x10^2$	$2.47x10^2$	$3.30x10^2$	$4.95x10^2$	$6.60x10^2$	$8.25x10^2$	$9.90x10^2$	$1.15x10^3$	$1.32x10^3$	$1.48x10^3$	$1.65x10^3$
ø63	Push	$1.56x10^2$	$3.12x10^2$	$4.68x10^2$	$6.23x10^2$	$9.35x10^2$	$1.25x10^3$	$1.56x10^3$	$1.87x10^3$	$2.18x10^3$	$2.49x10^3$	$2.81x10^3$	$3.12x10^3$
	Pull	$1.40x10^2$	$2.80x10^2$	$4.20x10^2$	$5.61x10^2$	$8.41x10^2$	$1.12x10^3$	$1.40x10^3$	$1.68x10^3$	$1.96x10^3$	$2.24x10^3$	$2.52x10^3$	$2.80x10^3$
ø80	Push	$2.51x10^2$	$5.03x10^2$	$7.54x10^2$	$1.01x10^3$	$1.51x10^3$	$2.01x10^3$	$2.51x10^3$	$3.02x10^3$	$3.52x10^3$	$4.02x10^3$	$4.52x10^3$	$5.03x10^3$
	Pull	$2.27x10^2$	$4.54x10^2$	$6.80x10^2$	$9.07x10^2$	$1.36x10^3$	$1.81x10^3$	$2.27x10^3$	$2.72x10^3$	$3.17x10^3$	$3.63x10^3$	$4.08x10^3$	$4.54x10^3$
ø100	Push	$3.93x10^2$	$7.85x10^2$	$1.18x10^3$	$1.57x10^3$	$2.36x10^3$	$3.14x10^3$	$3.93x10^3$	$4.71x10^3$	$5.50x10^3$	$6.28x10^3$	$7.07x10^3$	$7.85x10^3$
	Pull	$3.57x10^2$	$7.15x10^2$	$1.07x10^3$	$1.43x10^3$	$2.14x10^3$	$2.86x10^3$	$3.57x10^3$	$4.29x10^3$	$5.00x10^3$	$5.72x10^3$	$6.43x10^3$	$7.15x10^3$

How to order

No switch (built-in magnet for switch)

SCA2 — LB - 40 ◯ B - 100 — S I

With switch (built-in magnet for switch)

SCA2 — LB - 40 ◯ B - 100 — T0H - R - S I

With strong magnetic field proof (for H0, H0Y switches) switch (built-in magnet for switch)

SCA2-L2 - LB - 40 ◯ B - 100 - H0Y - R - S I

Ⓐ Mounting *1

Ⓑ Bore size

Ⓒ Port thread

Ⓓ Cushion

Ⓔ Stroke *2 *3

Ⓕ Switch model No. *4

Ⓖ Switch quantity *6

Ⓗ Option *7 *8

Ⓘ Accessory *9

Code	Description
Ⓐ Mounting	
00	Basic
LB	Axial foot
FA	Rod side flange
FB	Head side flange
FC	Head side special flange
CA	Eye bracket
CB	Clevis bracket (pin and snap ring included)
TC	Intermediate trunnion
TA	Rod side trunnion
TB	Head side trunnion
TF	Intermediate supporting hole trunnion (ø40 is not available)
TD	Rod side hole trunnion (ø40 is not available)
TE	Head side hole trunnion (ø40 is not available)

Ⓑ Bore size (mm)	
40	ø40
50	ø50
63	ø63
80	ø80
100	ø100

Ⓒ Port thread	
Blank	Rc thread
N	NPT thread (made-to-order product)
G	G thread (made-to-order product)

Ⓓ Cushion	
B	Both sides cushioned
R	Rod side cushioned
H	Head side cushioned
N	Without cushion

Ⓔ Stroke (mm)

Bore size	Stroke *4	Available stroke	Custom stroke
ø40	1 to 600	1600	In 1 mm increments
ø50	1 to 600	2000	
ø63	1 to 600	2500	
ø80	1 to 700	2500	
ø100	1 to 800	2500	

Ⓕ Switch model No.

Refer to the switch model No. table on the following page.

*** Lead wire length**	
Blank	1 m (standard)
3	3 m (option)
5	5 m (option)

Ⓖ Switch quantity	
R	1 on rod side
H	1 on head side
D	2
T	3

Ⓗ Option

		Max. ambient temp.	Instantaneous max. temp.
J	Bellows	100°C	200°C
L	Bellows	250°C	400°C
M	Piston rod material (stainless steel)		
Blank	Cushion needle position R (standard)		
S	Cushion needle position S		
T	Cushion needle position T		
P6	Copper and PTFE free		

Ⓘ Accessory	
I	Rod eye
Y	Rod clevis (pin and snap ring included)
B1	Eye bracket
B2	Clevis bracket (pin and snap ring included)
B3	Eye bracket
B4	Trunnion No. 2 bracket (2 pcs./set)

⚠ Precautions for model No. selection

*1 : Mounting bracket will be shipped with the product. (Trunnion are assembled at shipment.)
*2 : If the stroke exceeds the max. stroke, refer to Ending Page 69.
*3 : The max. stroke available for ø63 to ø100 bore size models with bellows is 2000 mm.
*4 : Switches are shipped with the product.
*5 : Refer to pages 450 and 451 for the min. stroke with switch.
*6 : When selecting TA, TD, TB or TE mounting, the switch quantity is limited to "H" (1 on head side) for TA and TD, and "R" (1 on rod side) for TB and TE.
*7 : The max. available stroke is 2000 mm for models with bellows. (ø63 to ø100) The instantaneous max. temperature is the temperature when sparks and cutting chips, etc., instantaneously contact the bellows.
*8 : When selecting TA, TD, TB or TE mounting format, the cushion needle position is blank and fixed at S, with no options available.
*9 : "I" and "Y" cannot be selected together.
*10 : Refer to Ending Page 85 for custom specifications of rod end form.
*11 : Refer to page 448 for combinations of variations/options.

[Example of model No.]

SCA2-LB-40B-100-T0H-R-SI

Model: Medium bore size cylinder, double acting/single rod

Ⓐ Mounting : Axial foot
Ⓑ Bore size : ø40 mm
Ⓒ Port thread : Rc thread
Ⓓ Cushion : Both sides cushioned
Ⓔ Stroke :100 mm
Ⓕ Switch model No. : Reed T0H switch, lead wire length 1 m
Ⓖ Switch quantity : 1 on rod side
Ⓗ Option : Cushion needle position S
Ⓘ Accessory : Rod eye

[F] Switch model No.

T-switch model No.						
Lead wire Straight	Lead wire L-shaped	Contact	Voltage AC	Voltage DC	Indicator	Lead wire
T0H*	T0V*	Reed	●	●	1-color LED	2-wire
T5H*	T5V*	Reed	●	●	No indicator lamp	2-wire
T8H*	T8V*	Reed	●	●	1-color LED	2-wire
T1H*	T1V*	Proximity	●		1-color LED	2-wire
T2H*	T2V*	Proximity		●	1-color LED	2-wire
T3H*	T3V*	Proximity		●	1-color LED	3-wire
T2WH*	T2WV*	Proximity		●	2-color LED	2-wire
T2YH*	T2YV*	Proximity		●	2-color LED	2-wire
T3WH*	T3WV*	Proximity		●	2-color LED	3-wire
T3YH*	T3YV*	Proximity		●	2-color LED	3-wire
T3PH*	T3PV*	Proximity		●	1-color LED	3-wire
T2YD*	-	Proximity		●	2-color LED AC magnetic field	2-wire
T2YDT*	-	Proximity		●	2-color LED AC magnetic field	2-wire
T2JH*	T2JV*	Proximity		●	1-color LED off-delay	2-wire
H switch model No.						
HO*	-	Reed	●	●	Strong magnetic field proof	2-wire
HOY*	-	Reed		●	Strong magnetic field, 2-color LED	2-wire

How to order switch

[T-switch]

● Switch body + mounting bracket set

SCA2 - T0H - 40

Switch model No. (Item Ⓕ) — Bore size (Item Ⓑ on page 454)

● Switch body only

SW - T0H

Switch model No. (Item Ⓕ)

* Contact CKD when using an environment-friendly T-switch.

● Switch mounting bracket set

SCA2 - TS - 40

Mounting bracket — Bore size (Item Ⓑ on page 454)

[H switch]

● Switch body + mounting bracket set

SCA2-L2 - H0 - 40

Switch model No. (Item Ⓕ) — Bore size (Item Ⓑ on page 454)

● Switch body only

SW - H0

Switch model No. (Item Ⓕ)

● Mounting bracket set

SCA2-L2 - H - 40

Bore size (Item Ⓑ on page 454)

[T2YD switch]

● Switch body + mounting bracket set

SCA2 - T2YD - 40

Switch model No. (Item Ⓕ) — Bore size (Item Ⓑ on page 454)

● Switch body only

SW - T2YD

Switch model No. (Item Ⓕ)

● Mounting bracket set

SCA2 - T - 40

Bore size (Item Ⓑ on page 454)

How to order mounting bracket

Bore size (mm) / Mounting bracket	ø40	ø50	ø63	ø80	ø100
Foot (LB) *2	S1-LB-40	S1-LB-50	S1-LB-63	S1-LB-80	S1-LB-100
Flange (FA/FB)	S1-FA-40	S1-FA-50	S1-FA-63	S1-FA-80	S1-FA-100
Eye bracket (CA)	S1-CA-40	S1-CA-50	S1-CA-63	S1-CA-80	S1-CA-100
Clevis bracket (CB)	S1-CB-40	S1-CB-50	S1-CB-63	S1-CB-80	S1-CB-100

*1 : For material of the mounting bracket, refer to page 456.
*2 : The foot mounting bracket is provided as 2 pcs./set.
*3 : All mounting brackets are supplied with mounting bolts.

Internal structure and parts list

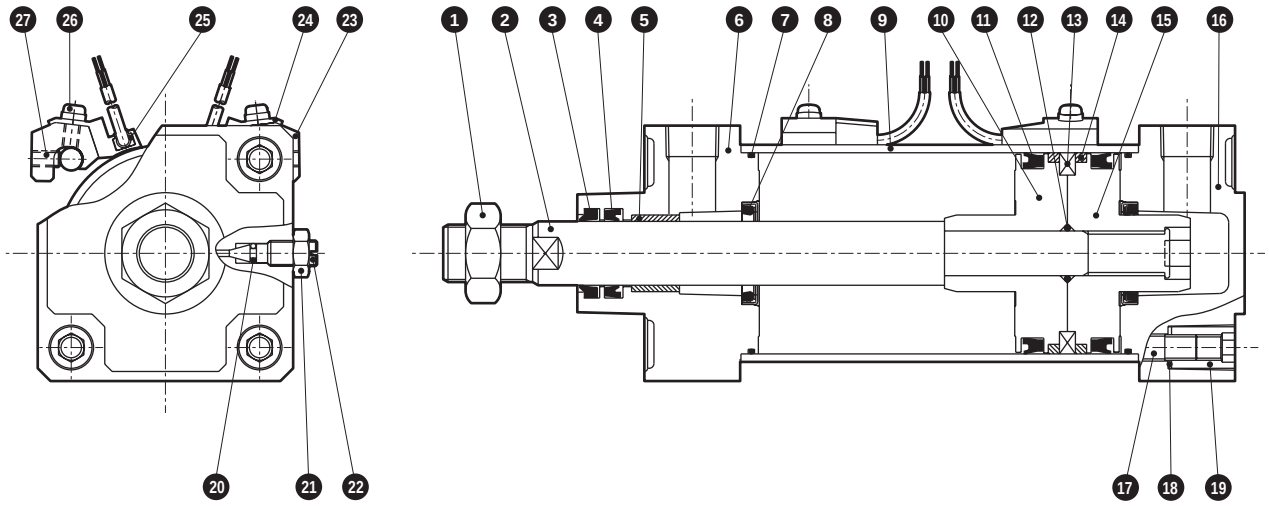

No.	Part name	Material	Remarks	No.	Part name	Material	Remarks
1	Rod nut	Steel	Zinc chromate	15	Piston H	Aluminum alloy die-casting	
2	Piston rod	Steel	Industrial chrome plating	16	Head cover	Aluminum alloy die-casting	Paint
3	Dust wiper	Nitrile rubber		17	Tie rod	Steel	Zinc chromate
4	Rod packing	Nitrile rubber		18	Conical spring washer	Steel	Black finish
5	Bush	Oil impregnated bearing alloy	*1	19	Round nut	Steel	Zinc chromate
6	Rod cover	Aluminum alloy die-casting	Paint	20	Needle gasket	Nitrile rubber	
7	Cylinder gasket	Nitrile rubber		21	Needle nut	Copper alloy	Nickel plating *2
8	Cushion packing	Nitrile rubber, steel		22	Cushion needle	Copper alloy	Nickel plating *2
9	Cylinder tube	Aluminum alloy	Hard alumite treatment	With switch			
10	Piston R	Aluminum alloy die-casting		23	Switch mounting base	Aluminum alloy	
11	Piston packing	Nitrile rubber		24	Switch holder	Aluminum alloy	
12	Piston gasket	Nitrile rubber		25	Cylinder switch		
13	Magnet	Plastic		26	Philips pan head machine screw/captive washer	Steel	Zinc chromate
14	Wear ring	Polyacetal resin		27	Hexagon socket set screw	Alloy steel	Black finish

*1: Oil-impregnated cast iron bearing for copper and PTFE free. *2: Steel + galvanizing for copper and PTFE free.

Repair parts list

Bore size (mm)	Kit No.	Repair parts No.
ø40	SCA2-40K	3 4 7 8 11 14 20
ø50	SCA2-50K	
ø63	SCA2-63K	
ø80	SCA2-80K	
ø100	SCA2-100K	

Note: Specify the kit No. when placing an order.

Material of mounting bracket

Mounting	Material	Remarks
LB	Steel	Paint
FA/FB/FC	Steel	Paint
CA/CB	Cast iron	Paint
TC/TA/TB	Cast iron	Paint

Dimensions

● Basic (00)

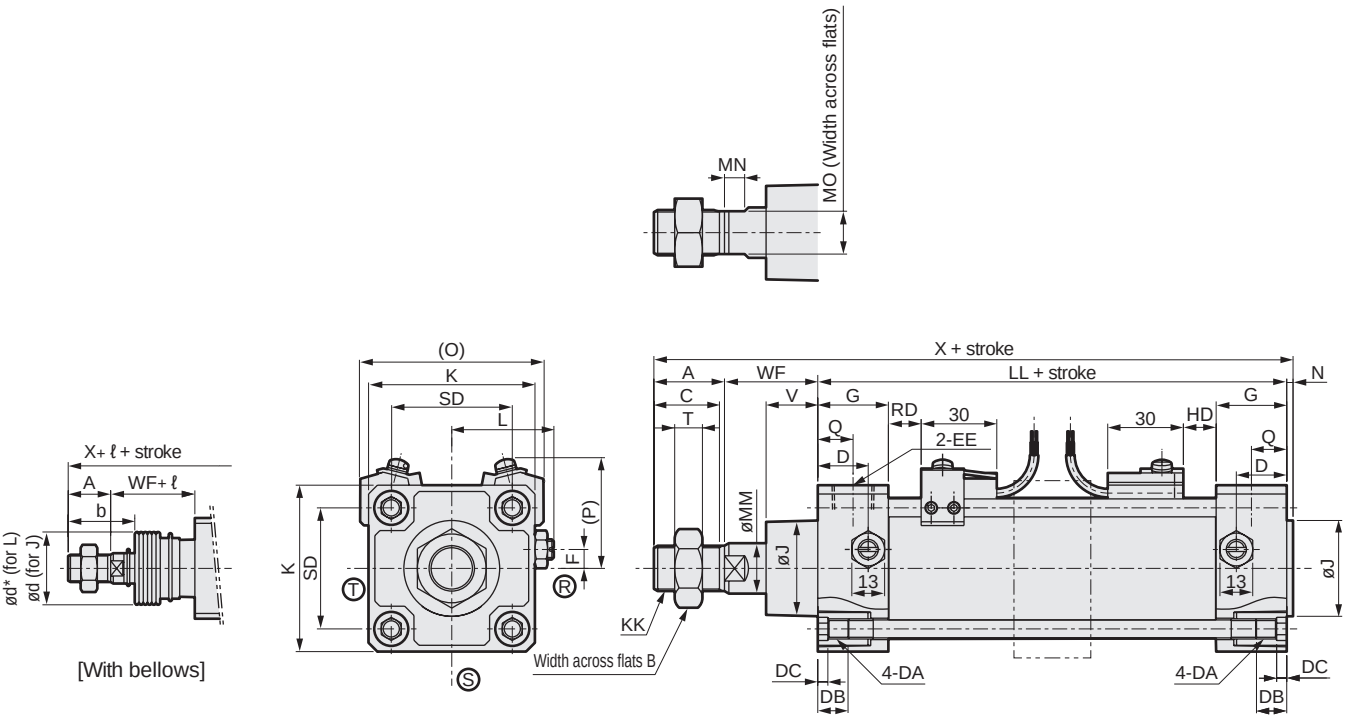

RD: Rod side max. sensitivity position
HD: Head side max. sensitivity position

Code	Basic (00) Basic dimensions																	
Bore size (mm)	A	B	C	D	DA	DB	DC	EE	F	G	J	K	KK	L	LL	MM	MN	MO
ø40	22	22	20	18	M8	12	4	Rc1/4	7.5	26	31	57	M14x1.5	38 to 39.5	93	16	8	14
ø50	28	27	26	20	M8	12	4	Rc3/8	0	28	38	66	M18x1.5	41 to 43.5	101	20	8	17
ø63	28	27	26	22	M8	12	4	Rc3/8	0	30	38	80	M18x1.5	47.5 to 50.0	105	20	8	17
ø80	36	32	34	26	M12	16	5	Rc1/2	0	34	43	98	M22x1.5	56 to 59	116	25	11	22
ø100	45	41	43	28	M12	16	5	Rc1/2	0	36	51	118	M26x1.5	66 to 69	128	30	13	27

Code								With bellows								
											ℓ					
Bore size (mm)	N	Q	SD	T	V	WF	X	b	d	d*	50 or less	Over 50 to 100	Over 100 to 150 or less	Over 150 to 200 or less	Over 200 to 300	Over 300 to 400
ø40	2	13	40.5	8	18.5	33.5	150.5	41	40	40	25.5	41.5	58.5	75.5	108.5	141.5
ø50	2.5	14	48	11	20.5	37	168.5	47	47	48	22	36	49	63	90	119
ø63	3	15	59	11	21	35	171	45	47	48	22	36	49	63	90	119
ø80	3.5	17	74	13	23.5	48	203.5	58.5	53	55	14	26	38	49	72	96
ø100	4	18	90	16	32	53	230	69.5	61	65	20	32	42	53	76	98

Code			With switch									
Bore size (mm)	Over 400 to 500	*1 Over 500	O	P	T0, T5 T2, T3		T2Y T3Y, T2J		T8		T2W, T3W	
					RD	HD	RD	HD	RD	HD	RD	HD
ø40	174.5	(Stroke/3.0) + 8	66	41.5	11	11	10	10	5	5	13	13
ø50	146	(Stroke/3.6) + 7.5	73	43	13	13	12	12	7	7	15	15
ø63	146	(Stroke/3.6) + 7.5	85	47	13	13	12	12	7	7	15	15
ø80	119	(Stroke/4.3) + 2.5	105	57	14.5	14.5	13.5	13.5	8.5	8.5	16.5	16.5
ø100	120	(Stroke/4.5) + 9	121	63	18.5	18.5	17.5	17.5	12.5	12.5	20.5	20.5

*1 : For the ℓ dimension, round up below the decimal point.
*2 : Ⓡ, Ⓢ and Ⓣ indicate the cushion needle position.
*3 : Refer to page 615 for dimensions of projection of T1, T2YD and HO switches.
*4 : For the dimensions of the accessories, refer to pages 470 and 471.
*5 : Non-sag block (2-dashed line) will be added depending on the stroke. Refer to page 614 for details on dimensions.

SCP*3
CMK2
CMA2
SCM
SCG
SCA2
SCS2
CKV2
CAV2/COVP/N2
SSD2
SSG
SSD
CAT
MDC2
MVC
SMG
MSD/MSDG
FC*
STK
SRL3
SRG3
SRM3
SRT3
MRL2
MRG2
SM-25
ShkAbs
FJ
FK
Spd Contr
Ending

Dimensions

● Axial foot (LB)

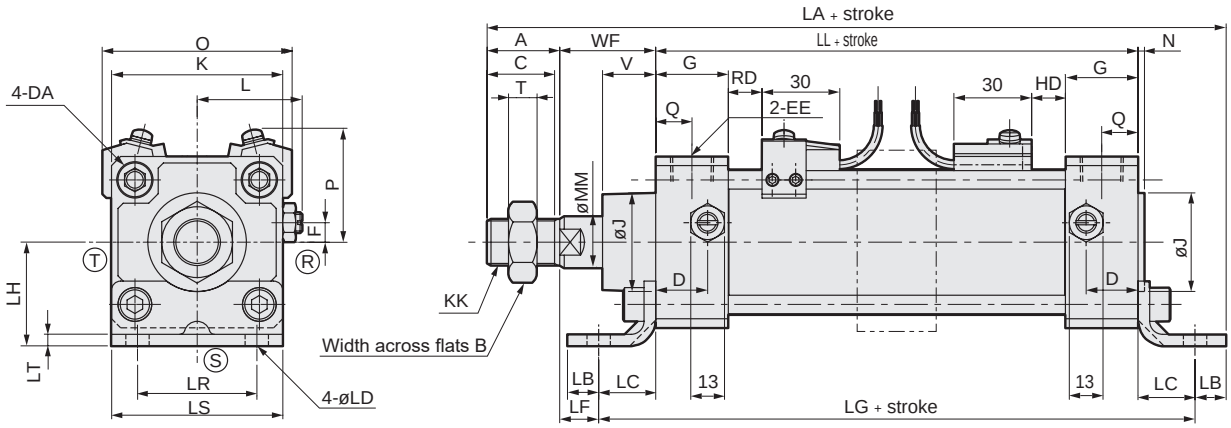

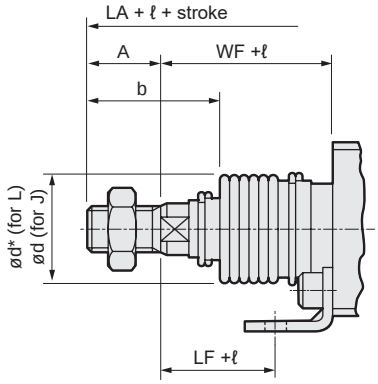

[With bellows]

Code	Axial foot (LB) Basic dimensions																		
Bore size (mm)	A	B	C	D	DA	EE	F	G	J	K	KK	L	LL	MM	N	Q	T	V	WF
ø40	22	22	20	18	M8	Rc1/4	7.5	26	31	57	M14x1.5	38 to 39.5	93	16	2	13	8	18.5	33.5
ø50	28	27	26	20	M8	Rc3/8	0	28	38	66	M18x1.5	41 to 43.5	101	20	2.5	14	11	20.5	37
ø63	28	27	26	22	M8	Rc3/8	0	30	38	80	M18x1.5	47.5 to 50.0	105	20	3	15	11	21	35
ø80	36	32	34	26	M12	Rc1/2	0	34	43	98	M22x1.5	56 to 59	116	25	3.5	17	13	23.5	48
ø100	45	41	43	28	M12	Rc1/2	0	36	51	118	M26x1.5	66 to 69	128	30	4	18	16	32	53

Code	Mounting dimensions										With bellows							
														ℓ				
Bore size (mm)	LA	LB	LC	LD	LF	LG	LH	LR	LS	LT	b	d	d*	50 or less	Over 50 to 100	Over 100 to 150	Over 150 to 200	Over 200 to 300
ø40	178	10	19.5	9	14	132	40	40	57	3.2	41	40	40	25.5	41.5	58.5	75.5	108.5
ø50	200	12	22	9	15	145	40	46	66	4.5	47	47	48	22	36	49	63	90
ø63	210	12	30	11	5	165	50	60	80	4.5	45	47	48	22	36	49	63	90
ø80	251	14	37	14	11	190	60	74	98	6.0	58.5	53	55	14	26	38	49	72
ø100	278	21	31	14	22	190	67	80	118	6.0	69.5	61	65	20	32	42	53	76

Code				With switch									
Bore size (mm)	Over 300 to 400	Over 400 to 500	*1 Over 500	O	P	T0, T5 T2, T3		T1, T2Y T3Y, T2J		T8		T2W, T3W	
						RD	HD	RD	HD	RD	HD	RD	HD
ø40	141.5	174.5	(Stroke/3.0) + 8	66	41.5	11	11	10	10	5	5	13	13
ø50	119	146	(Stroke/3.6) + 7.5	73	43	13	13	12	12	7	7	15	15
ø63	119	146	(Stroke/3.6) + 7.5	85	47	13	13	12	12	7	7	15	15
ø80	96	119	(Stroke/4.3) + 2.5	105	57	14.5	14.5	13.5	13.5	8.5	8.5	16.5	16.5
ø100	98	120	(Stroke/4.5) + 9	121	63	18.5	18.5	17.5	17.5	12.5	12.5	20.5	20.5

*1 : For the ℓ dimension, round up below the decimal point.
*2 : Ⓡ, Ⓢ and Ⓣ indicate the cushion needle position.
*3 : Refer to page 615 for dimensions of projection of T1, T2YD and HO switches.
*4 : For the dimensions of the accessories, refer to pages 470 and 471.
*5 : Non-sag block (2-dashed line) will be added depending on the stroke. Refer to page 614 for details on dimensions.

Dimensions

● Rod side flange (FA)

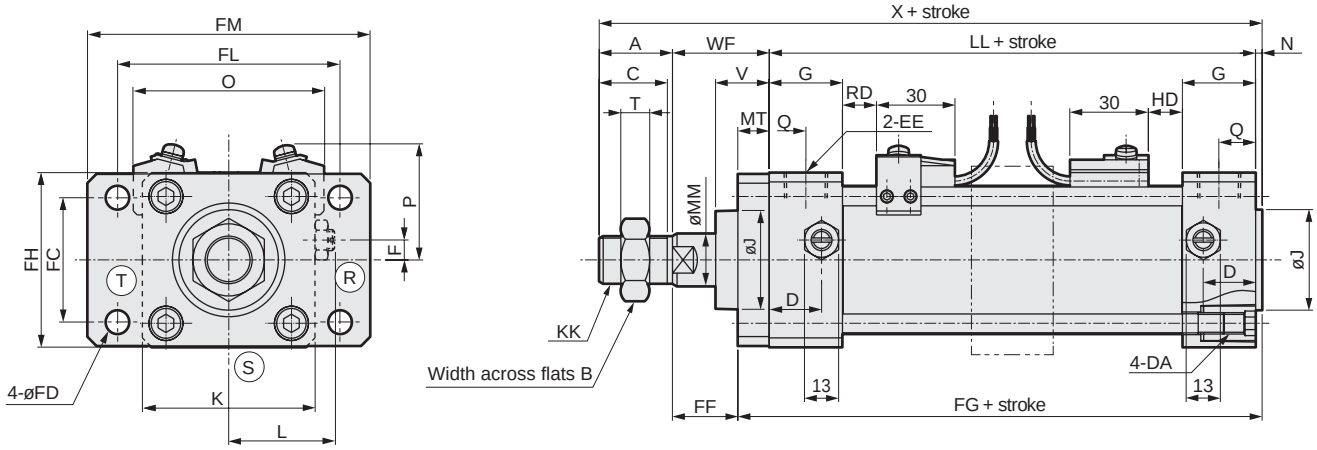

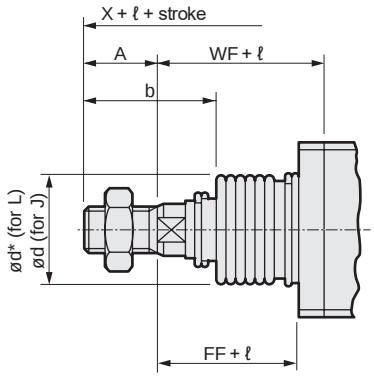

[With bellows]

Code	Rod side flange (FA) Basic dimensions																			
Bore size (mm)	A	B	C	D	DA	EE	F	G	J	K	KK	L	LL	MM	N	Q	T	V	WF	X
ø40	22	22	20	18	M8	Rc1/4	7.5	26	31	57	M14x1.5	38 to 39.5	93	16	2	13	8	18.5	33.5	150.5
ø50	28	27	26	20	M8	Rc3/8	0	28	38	66	M18x1.5	41 to 43.5	101	20	2.5	14	11	20.5	37	168.5
ø63	28	27	26	22	M8	Rc3/8	0	30	38	80	M18x1.5	47.5 to 50.0	105	20	3	15	11	21	35	171
ø80	36	32	34	26	M12	Rc1/2	0	34	43	98	M22x1.5	56 to 59	116	25	3.5	17	13	23.5	48	203.5
ø100	45	41	43	28	M12	Rc1/2	0	36	51	118	M26x1.5	66 to 69	128	30	4	18	16	32	53	230

Code	Mounting dimensions								With bellows									
												ℓ						
Bore size (mm)	FC	FD	FF	FG	MT	FH	FL	FM	b	d	d*	50 or less	Over 50 to 100	Over 100 to 150	Over 150 to 200	Over 200 to 300	Over 300 to 400	Over 400 to 500
ø40	40	9	21.5	107	12	57	80	100	41	40	40	25.5	41.5	58.5	75.5	108.5	141.5	174.5
ø50	47	9	25	115.5	12	65	85	108	47	47	48	22	36	49	63	90	119	146
ø63	60	11	19	124	16	80	106	130	45	47	48	22	36	49	63	90	119	146
ø80	74	14	29	138.5	19	98	125	153	58.5	53	55	14	26	38	49	72	96	119
ø100	88	14	34	151	19	118	144	180	69.5	61	65	20	32	42	53	76	98	120

Code		With switch									
Bore size (mm)	*1 Over 500	O	P	T0, T5 T2, T3		T1, T2Y T3Y, T2J		T8		T2W, T3W	
				RD	HD	RD	HD	RD	HD	RD	HD
ø40	(Stroke/3.0) + 8	66	41.5	11	11	10	10	5	5	13	13
ø50	(Stroke/3.6) + 7.5	73	43	13	13	12	12	7	7	15	15
ø63	(Stroke/3.6) + 7.5	85	47	13	13	12	12	7	7	15	15
ø80	(Stroke/4.3) + 2.5	105	57	14.5	14.5	13.5	13.5	8.5	8.5	16.5	16.5
ø100	(Stroke/4.5) + 9	121	63	18.5	18.5	17.5	17.5	12.5	12.5	20.5	20.5

*1 : For the ℓ dimension, round up below the decimal point.
*2 : Ⓡ, Ⓢ and Ⓣ indicate the cushion needle position.
*3 : Refer to page 615 for dimensions of projection of T1, T2YD and HO switches.
*4 : For the dimensions of the accessories, refer to pages 470 and 471.
*5 : Non-sag block (2-dashed line) will be added depending on the stroke. Refer to page 614 for details on dimensions.

SCP*3
CMK2
CMA2
SCM
SCG
SCA2
SCS2
CKV2
CAV2/ COVP/N2
SSD2
SSG
SSD
CAT
MDC2
MVC
SMG
MSD/ MSDG
FC*
STK
SRL3
SRG3
SRM3
SRT3
MRL2
MRG2
SM-25
ShkAbs
FJ
FK
Spd Contr
Ending

Dimensions

● Head side flange (FB)

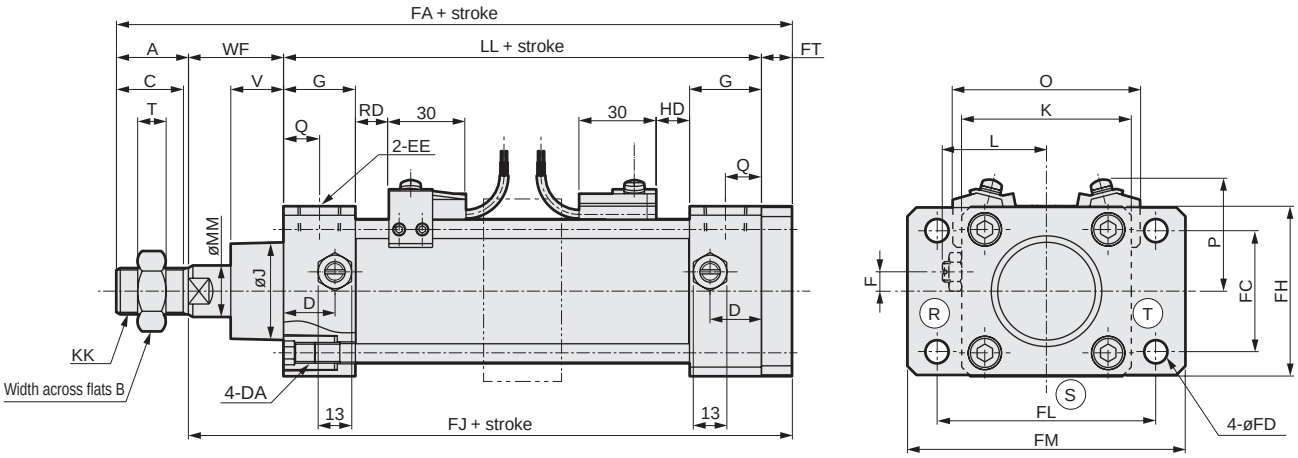

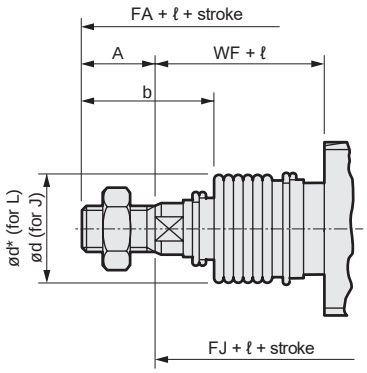

[With bellows]

Code	Head side flange (FB) Basic dimensions																	
Bore size (mm)	A	B	C	D	DA	EE	F	G	J	K	KK	L	LL	MM	Q	T	V	WF
ø40	22	22	20	18	M8	Rc1/4	7.5	26	31	57	M14x1.5	38 to 39.5	93	16	13	8	18.5	33.5
ø50	28	27	26	20	M8	Rc3/8	0	28	38	66	M18x1.5	41 to 43.5	101	20	14	11	20.5	37
ø63	28	27	26	22	M8	Rc3/8	0	30	38	80	M18x1.5	47.5 to 50.0	105	20	15	11	21	35
ø80	36	32	34	26	M12	Rc1/2	0	34	43	98	M22x1.5	56 to 59	116	25	17	13	23.5	48
ø100	45	41	43	28	M12	Rc1/2	0	36	51	118	M26x1.5	66 to 69	128	30	18	16	32	53

Code	Mounting dimensions								With bellows								
												ℓ					
Bore size (mm)	FA	FC	FD	FH	FJ	FL	FM	FT	b	d	d*	50 or less	Over 50 to 100	Over 100 to 150	Over 150 to 200	Over 200 to 300	Over 300 to 400
ø40	160.5	40	9	57	138.5	80	100	12	41	40	40	25.5	41.5	58.5	75.5	108.5	141.5
ø50	178	47	9	65	150	85	108	12	47	47	48	22	36	49	63	90	119
ø63	184	60	11	80	156	106	130	16	45	47	48	22	36	49	63	90	119
ø80	219	74	14	98	183	125	153	19	58.5	53	55	14	26	38	49	72	96
ø100	245	88	14	118	200	144	180	19	69.5	61	65	20	32	42	53	76	98

Code			With switch									
Bore size (mm)	Over 400 to 500	*1 Over 500	O	P	T0, T5 T2, T3		T1, T2Y T3Y, T2J		T8		T2W, T3W	
					RD	HD	RD	HD	RD	HD	RD	HD
ø40	174.5	(Stroke/3.0) + 8	66	41.5	11	11	10	10	5	5	13	13
ø50	146	(Stroke/3.6) + 7.5	73	43	13	13	12	12	7	7	15	15
ø63	146	(Stroke/3.6) + 7.5	85	47	13	13	12	12	7	7	15	15
ø80	119	(Stroke/4.3) + 2.5	105	57	14.5	14.5	13.5	13.5	8.5	8.5	16.5	16.5
ø100	120	(Stroke/4.5) + 9	121	63	18.5	18.5	17.5	17.5	12.5	12.5	20.5	20.5

*1 : For the ℓ dimension, round up below the decimal point.
*2 : Ⓡ, Ⓢ and Ⓣ indicate the cushion needle position.
*3 : Refer to page 615 for dimensions of projection of T1, T2YD and HO switches.
*4 : For the dimensions of the accessories, refer to pages 470 and 471.
*5 : Non-sag block (2-dashed line) will be added depending on the stroke. Refer to page 614 for details on dimensions.

Dimensions

● Head side special flange (FC)

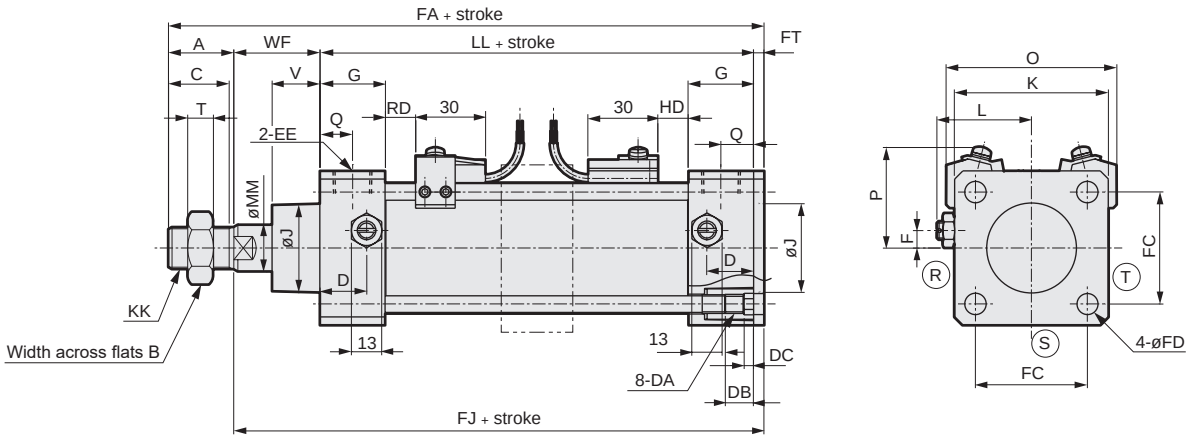

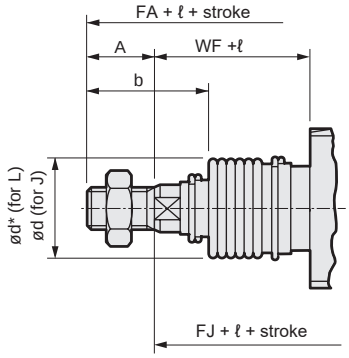

[With bellows]

Code	Head side flange (FC) Basic dimensions																	
Bore size (mm)	A	B	C	D	DA	DB	DC	EE	F	G	J	K	KK	L	LL	MM	Q	T
ø40	22	22	20	18	M8	12	4	Rc1/4	7.5	26	31	57	M14x1.5	38 to 39.5	93	16	13	8
ø50	28	27	26	20	M8	12	4	Rc3/8	0	28	38	66	M18x1.5	41 to 43.5	101	20	14	11
ø63	28	27	26	22	M8	12	4	Rc3/8	0	30	38	80	M18x1.5	47.5 to 50.0	105	20	15	11
ø80	36	32	34	26	M12	16	5	Rc1/2	0	34	43	98	M22x1.5	56 to 59	116	25	17	13
ø100	45	41	43	28	M12	16	5	Rc1/2	0	36	51	118	M26x1.5	66 to 69	128	30	18	16

Code			Mounting method					With bellows									
											ℓ						
Bore size (mm)	V	WF	FA	FC	FD	FJ	FT	b	d	d*	50 or less	Over 50 to 100	Over 100 to 150	Over 150 to 200	Over 200 to 300	Over 300 to 400	Over 400 to 500
ø40	18.5	33.5	153	40.5	9	131	4.5	41	40	40	25.5	41.5	58.5	75.5	108.5	141.5	174.5
ø50	20.5	37	170.5	48	9	142.5	4.5	47	47	48	22	36	49	63	90	119	146
ø63	21	35	172.5	59	9	144.5	4.5	45	47	48	22	36	49	63	90	119	146
ø80	23.5	48	206	74	14	170	6	58.5	53	55	14	26	38	49	72	96	119
ø100	32	53	232	90	14	187	6	69.5	61	65	20	32	42	53	76	98	120

Code		With switch									
Bore size (mm)	*1 Over 500	O	P	T0, T5 T2, T3		T1, T2Y T3Y, T2J		T8		T2W, T3W	
				RD	HD	RD	HD	RD	HD	RD	HD
ø40	(Stroke/3.0) + 8	66	41.5	11	11	10	10	5	5	13	13
ø50	(Stroke/3.6) + 7.5	73	43	13	13	12	12	7	7	15	15
ø63	(Stroke/3.6) + 7.5	85	47	13	13	12	12	7	7	15	15
ø80	(Stroke/4.3) + 2.5	105	57	14.5	14.5	13.5	13.5	8.5	8.5	16.5	16.5
ø100	(Stroke/4.5) + 9	121	63	18.5	18.5	17.5	17.5	12.5	12.5	20.5	20.5

*1 : For the ℓ dimension, round up below the decimal point.
*2 : Ⓡ, Ⓢ and Ⓣ indicate the cushion needle position.
*3 : Refer to page 615 for dimensions of projection of T1, T2YD and HO switches.
*4 : For the dimensions of the accessories, refer to pages 470 and 471.
*5 : Non-sag block (2-dashed line) will be added depending on the stroke. Refer to page 614 for details on dimensions.

SCP*3
CMK2
CMA2
SCM
SCG
SCA2
SCS2
CKV2
CAV2/COVP/N2
SSD2
SSG
SSD
CAT
MDC2
MVC
SMG
MSD/MSDG
FC*
STK
SRL3
SRG3
SRM3
SRT3
MRL2
MRG2
SM-25
ShkAbs
FJ
FK
Spd Contr
Ending

Dimensions

● Eye bracket (CA)

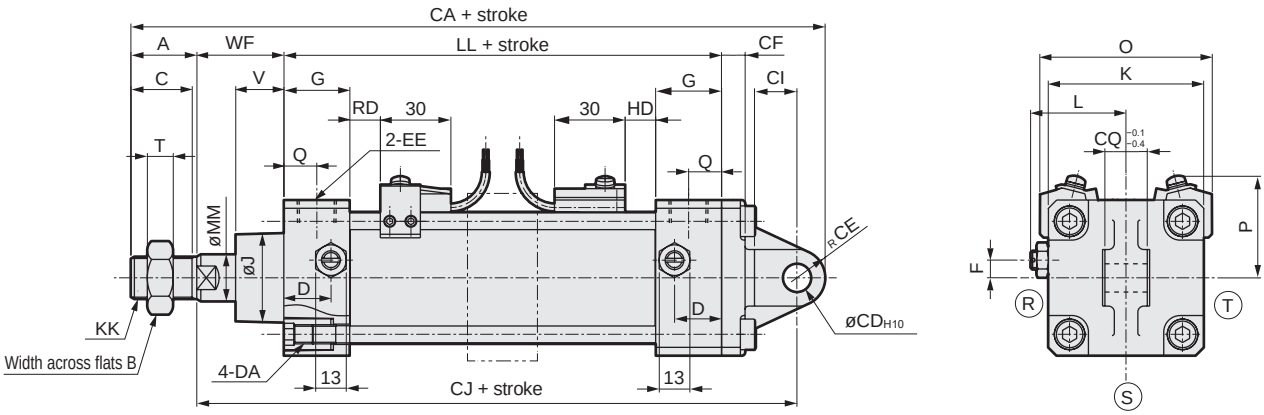

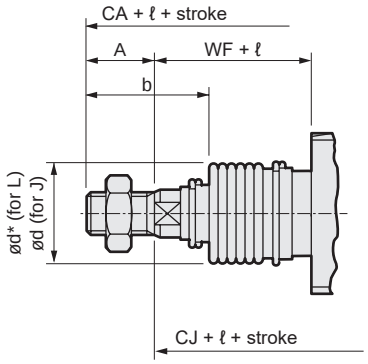

[With bellows]

Code	Eye bracket (CA) Basic dimensions																	
Bore size (mm)	A	B	C	D	DA	EE	F	G	J	K	KK	L	LL	MM	Q	T	V	WF
ø40	22	22	20	18	M8	Rc1/4	7.5	26	31	57	M14x1.5	38 to 39.5	93	16	13	8	18.5	33.5
ø50	28	27	26	20	M8	Rc3/8	0	28	38	66	M18x1.5	41 to 43.5	101	20	14	11	20.5	37
ø63	28	27	26	22	M8	Rc3/8	0	30	38	80	M18x1.5	47.5 to 50.0	105	20	15	11	21	35
ø80	36	32	34	26	M12	Rc1/2	0	34	43	98	M22x1.5	56 to 59	116	25	17	13	23.5	48
ø100	45	41	43	28	M12	Rc1/2	0	36	51	118	M26x1.5	66 to 69	128	30	18	16	32	53

Code	Mounting dimensions							With bellows									
											ℓ						
Bore size (mm)	CA	CD	CE	CF	CI	CJ	CQ	b	d	d*	50 or less	Over 50 to 100	Over 100 to 150	Over 150 to 200	Over 200 to 300	Over 300 to 400	Over 400 to 500
ø40	192.5	12	12	10	18	158.5	18	41	40	40	25.5	41.5	58.5	75.5	108.5	141.5	174.5
ø50	210	12	12	10	18	170	18	47	47	48	22	36	49	63	90	119	146
ø63	221	14	16	10	24	177	20	45	47	48	22	36	49	63	90	119	146
ø80	272	20	20	14	30	216	28	58.5	53	55	14	26	38	49	72	96	119
ø100	298	20	20	16	30	233	28	69.5	61	65	20	32	42	53	76	98	120

Code		With switch									
Bore size (mm)	*1 Over 500	O	P	T0, T5 T2, T3		T1, T2Y T3Y, T2J		T8		T2W, T3W	
				RD	HD	RD	HD	RD	HD	RD	HD
ø40	(Stroke/3.0) + 8	66	41.5	11	11	10	10	5	5	13	13
ø50	(Stroke/3.6) + 7.5	73	43	13	13	12	12	7	7	15	15
ø63	(Stroke/3.6) + 7.5	85	47	13	13	12	12	7	7	15	15
ø80	(Stroke/4.3) + 2.5	105	57	14.5	14.5	13.5	13.5	8.5	8.5	16.5	16.5
ø100	(Stroke/4.5) + 9	121	63	18.5	18.5	17.5	17.5	12.5	12.5	20.5	20.5

*1 : For the ℓ dimension, round up below the decimal point.
*2 : Ⓡ, Ⓢ and Ⓣ indicate the cushion needle position.
*3 : Refer to page 615 for dimensions of projection of T1, T2YD and HO switches.
*4 : For the dimensions of the accessories, refer to pages 470 and 471.
*5 : Non-sag block (2-dashed line) will be added depending on the stroke. Refer to page 614 for details on dimensions.

Dimensions

● Clevis bracket (CB)

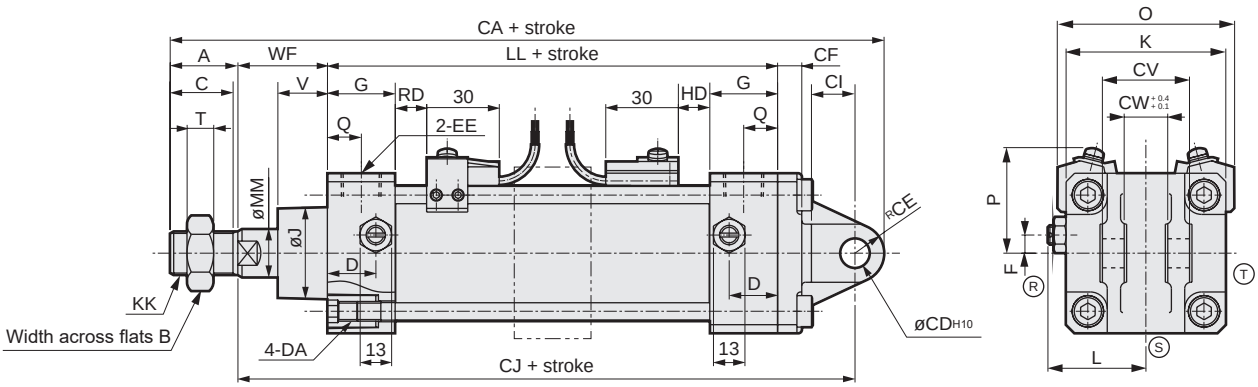

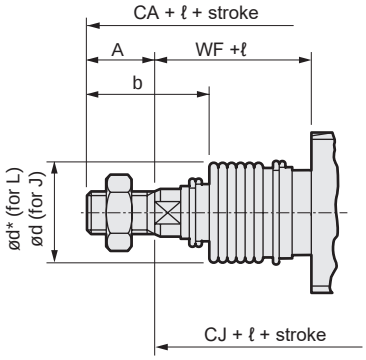

[With bellows]

Code	Clevis bracket (CB) Basic dimensions																	
Bore size (mm)	A	B	C	D	DA	EE	F	G	J	K	KK	L	LL	MM	Q	T	V	WF
ø40	22	22	20	18	M8	Rc1/4	7.5	26	31	57	M14x1.5	38 to 39.5	93	16	13	8	18.5	33.5
ø50	28	27	26	20	M8	Rc3/8	0	28	38	66	M18x1.5	41 to 43.5	101	20	14	11	20.5	37
ø63	28	27	26	22	M8	Rc3/8	0	30	38	80	M18x1.5	47.5 to 50.0	105	20	15	11	21	35
ø80	36	32	34	26	M12	Rc1/2	0	34	43	98	M22x1.5	56 to 59	116	25	17	13	23.5	48
ø100	45	41	43	28	M12	Rc1/2	0	36	51	118	M26x1.5	66 to 69	128	30	18	16	32	53

Code	Mounting dimensions								With bellows									
												ℓ						
Bore size (mm)	CA	CD	CE	CF	CI	CJ	CV	CW	b	d	d*	50 or less	Over 50 to 100	Over 100 to 150	Over 150 to 200	Over 200 to 300	Over 300 to 400	Over 400 to 500
ø40	192.5	12	12	10	18	158.5	36	18	41	40	40	25.5	41.5	58.5	75.5	108.5	141.5	174.5
ø50	210	12	12	10	18	170	36	18	47	47	48	22	36	49	63	90	119	146
ø63	221	14	16	10	24	177	40	20	45	47	48	22	36	49	63	90	119	146
ø80	272	20	20	14	30	216	56	28	58.5	53	55	14	26	38	49	72	96	119
ø100	298	20	20	16	30	233	56	28	69.5	61	65	20	32	42	53	76	98	120

Code		With switch									
Bore size (mm)	*1 Over 500	O	P	T0, T5 T2, T3		T1, T2Y T3Y, T2J		T8		T2W, T3W	
				RD	HD	RD	HD	RD	HD	RD	HD
ø40	(Stroke/3.0) + 8	66	41.5	11	11	10	10	5	5	13	13
ø50	(Stroke/3.6) + 7.5	73	43	13	13	12	12	7	7	15	15
ø63	(Stroke/3.6) + 7.5	85	47	13	13	12	12	7	7	15	15
ø80	(Stroke/4.3) + 2.5	105	57	14.5	14.5	13.5	13.5	8.5	8.5	16.5	16.5
ø100	(Stroke/4.5) + 9	121	63	18.5	18.5	17.5	17.5	12.5	12.5	20.5	20.5

*1 : For the ℓ dimension, round up below the decimal point.
*2 : Ⓡ, Ⓢ and Ⓣ indicate the cushion needle position.
*3 : A pin is included.
*4 : Refer to page 615 for dimensions of projection of T1, T2YD and HO switches.
*5 : For the dimensions of the accessories, refer to pages 470 and 471.
*6 : Non-sag block (2-dashed line) will be added depending on the stroke. Refer to page 614 for details on dimensions.

Dimensions

● Intermediate trunnion (TC)

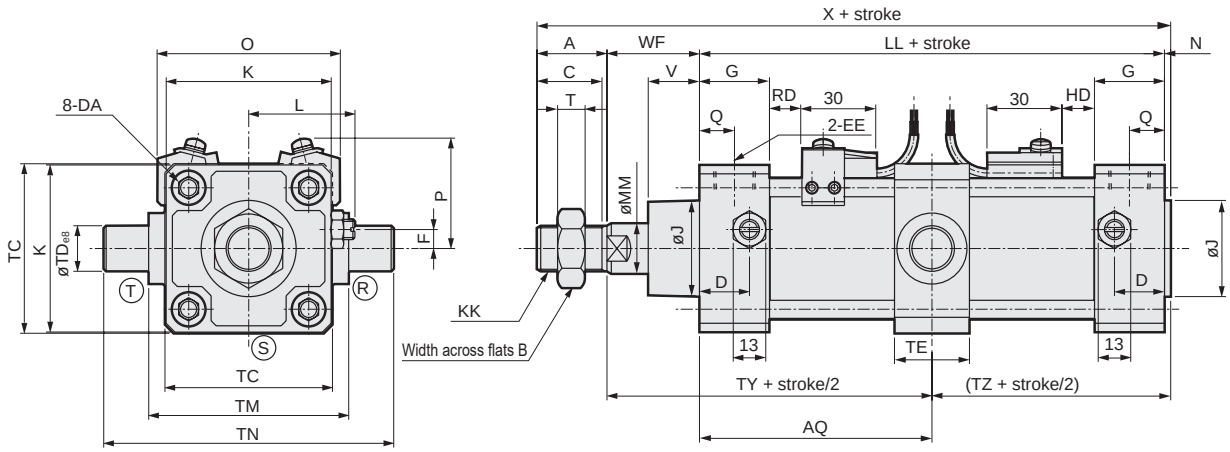

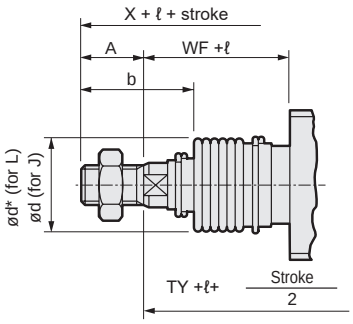

[With bellows]

Code	Intermediate trunnion (TC) Basic dimensions																	
Bore size (mm)	A	B	C	D	DA	EE	F	G	J	K	KK	L	LL	MM	N	Q	T	V
ø40	22	22	20	18	M8	Rc1/4	7.5	26	31	57	M14x1.5	38 to 39.5	93	16	2	13	8	18.5
ø50	28	27	26	20	M8	Rc3/8	0	28	38	66	M18x1.5	41 to 43.5	101	20	2.5	14	11	20.5
ø63	28	27	26	22	M8	Rc3/8	0	30	38	80	M18x1.5	47.5 to 50.0	105	20	3	15	11	21
ø80	36	32	34	26	M12	Rc1/2	0	34	43	98	M22x1.5	56 to 59	116	25	3.5	17	13	23.5
ø100	45	41	43	28	M12	Rc1/2	0	36	51	118	M26x1.5	66 to 69	128	30	4	18	16	32

Code			Mounting dimensions								With bellows						
														ℓ			
Bore size (mm)	WF	X	AQ	TC	TD	TE	TM	TN	TY	TZ	b	d	d*	50 or less	Over 50 to 100	Over 100 to 150	Over 150 to 200
ø40	33.5	150.5	46.5 + Stroke/2	57	16	30	63	95	80	48.5	41	40	40	25.5	41.5	58.5	75.5
ø50	37	168.5	50.5 + Stroke/2	67	18	30	80	116	87.5	53	47	47	48	22	36	49	63
ø63	35	171	52.5 + Stroke/2	82	20	35	90	130	87.5	55.5	45	47	48	22	36	49	63
ø80	48	203.5	58 + Stroke/2	100	25	40	115	165	106	61.5	58.5	53	55	14	26	38	49
ø100	53	230	64 + Stroke/2	121	35	50	135	205	117	68	69.5	61	65	20	32	42	53

Code					With switch									
Bore size (mm)	Over 200 to 300	Over 300 to 400	Over 400 to 500	*1 Over 500	O	P	T0, T5 T2, T3		T1, T2Y T3Y, T2J		T8		T2W, T3W	
							RD	HD	RD	HD	RD	HD	RD	HD
ø40	108.5	141.5	174.5	(Stroke/3.0) + 8	66	41.5	11	11	10	10	5	5	13	13
ø50	90	119	146	(Stroke/3.6) + 7.5	73	43	13	13	12	12	7	7	15	15
ø63	90	119	146	(Stroke/3.6) + 7.5	85	47	13	13	12	12	7	7	15	15
ø80	72	96	119	(Stroke/4.3) + 2.5	105	57	14.5	14.5	13.5	13.5	8.5	8.5	16.5	16.5
ø100	76	98	120	(Stroke/4.5) + 9	121	63	18.5	18.5	17.5	17.5	12.5	12.5	20.5	20.5

*1 : For the ℓ dimension, round up below the decimal point.
*2 : Ⓡ, Ⓢ and Ⓣ indicate the cushion needle position.
*3 : Refer to page 615 for dimensions of projection of T1, T2YD and HO switches.
*4 : For the dimensions of the accessories, refer to pages 470 and 471.

Dimensions

● Rod side trunnion (TA)

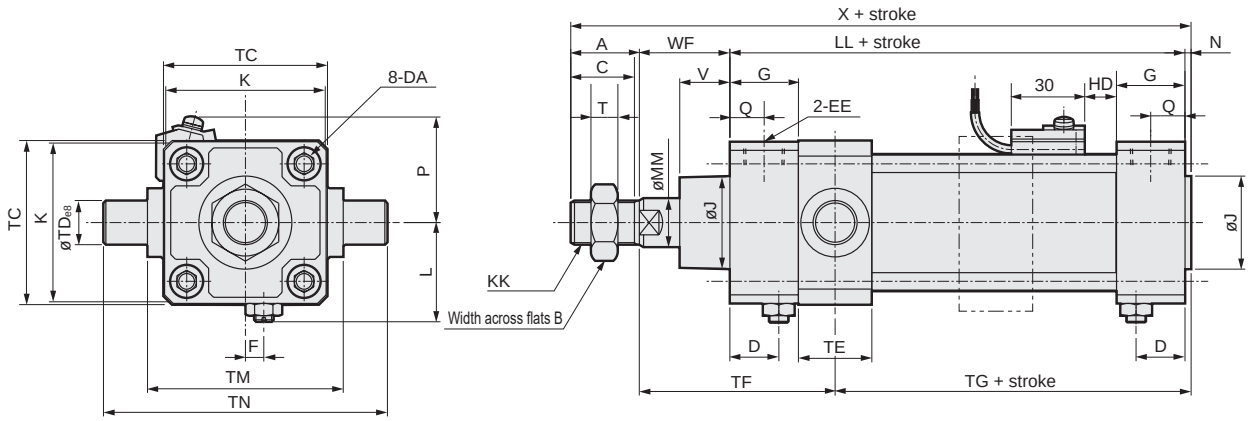

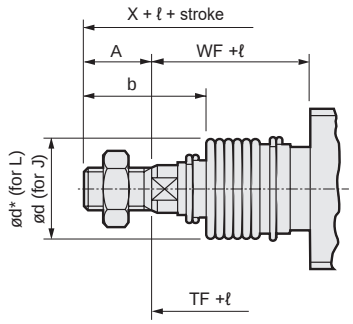

[With bellows]

Code	Rod side trunnion (TA) Basic dimensions																	
Bore size (mm)	A	B	C	D	DA	EE	F	G	J	K	KK	L	LL	MM	N	Q	T	V
ø40	22	22	20	18	M8	Rc1/4	7.5	26	31	57	M14x1.5	38 to 39.5	93	16	2	13	8	18.5
ø50	28	27	26	20	M8	Rc3/8	0	28	38	66	M18x1.5	41 to 43.5	101	20	2.5	14	11	20.5
ø63	28	27	26	22	M8	Rc3/8	0	30	38	80	M18x1.5	47.5 to 50.0	105	20	3	15	11	21
ø80	36	32	34	26	M12	Rc1/2	0	34	43	98	M22x1.5	56 to 59	116	25	3.5	17	13	23.5
ø100	45	41	43	28	M12	Rc1/2	0	36	51	118	M26x1.5	66 to 69	128	30	4	18	16	32

Code			Mounting dimensions							With bellows							
													ℓ				
Bore size (mm)	WF	X	TC	TD	TE	TF	TG	TM	TN	b	d	d*	50 or less	Over 50 to 100	Over 100 to 150	Over 150 to 200	Over 200 to 300
ø40	33.5	150.5	57	16	30	74.5	54	63	95	41	40	40	25.5	41.5	58.5	75.5	108.5
ø50	37	168.5	67	18	30	80	60.5	80	116	47	47	48	22	36	49	63	90
ø63	35	171	82	20	35	82.5	60.5	90	130	45	47	48	22	36	49	63	90
ø80	48	203.5	100	25	40	102	65.5	115	165	58.5	53	55	14	26	38	49	72
ø100	53	230	121	35	50	114	71	135	205	69.5	61	65	20	32	42	53	76

Code				With switch				
Bore size (mm)	Over 300 to 400	Over 400 to 500	*1 Over 500	P	T0, T5 T2, T3 HD	T1, T2Y T3Y, T2J HD	T8 HD	T2W, T3W HD
ø40	141.5	174.5	(Stroke/3.0) + 8	41.5	11	10	5	13
ø50	119	146	(Stroke/3.6) + 7.5	43	13	12	7	15
ø63	119	146	(Stroke/3.6) + 7.5	47	13	12	7	15
ø80	96	119	(Stroke/4.3) + 2.5	57	14.5	13.5	8.5	16.5
ø100	98	120	(Stroke/4.5) + 9	63	18.5	17.5	12.5	20.5

*1 : Position cannot be detected at rod side stroke end.
*2 : For the ℓ dimension, round up below the decimal point.
*3 : The position of the cushion needle cannot be changed.
*4 : Refer to page 615 for dimensions of projection of T1, T2YD and HO switches.
*5 : For the dimensions of the accessories, refer to pages 470 and 471.
*6 : Non-sag block (2-dashed line) will be added depending on the stroke. Refer to page 614 for details on dimensions.

SCP*3
CMK2
CMA2
SCM
SCG
SCA2
SCS2
CKV2
CAV2/ COVP/N2
SSD2
SSG
SSD
CAT
MDC2
MVC
SMG
MSD/ MSDG
FC*
STK
SRL3
SRG3
SRM3
SRT3
MRL2
MRG2
SM-25
ShkAbs
FJ
FK
Spd Contr
Ending

Dimensions

● Head side trunnion (TB)

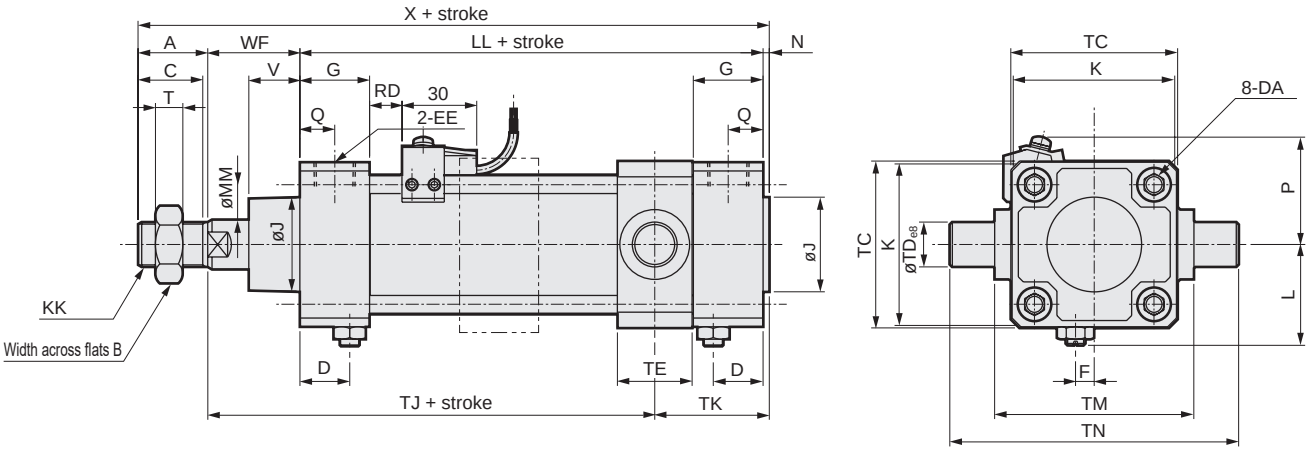

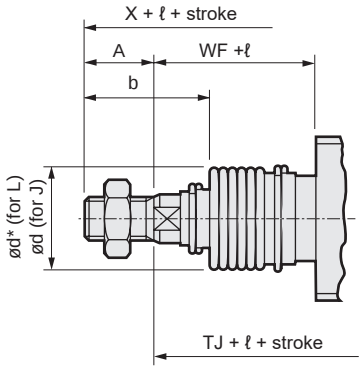

[With bellows]

Code	Head side trunnion (TB) Basic dimensions																	
Bore size (mm)	A	B	C	D	DA	EE	F	G	J	K	KK	L	LL	MM	N	Q	T	V
ø40	22	22	20	18	M8	Rc1/4	7.5	26	31	57	M14x1.5	38 to 39.5	93	16	2	13	8	18.5
ø50	28	27	26	20	M8	Rc3/8	0	28	38	66	M18x1.5	41 to 43.5	101	20	2.5	14	11	20.5
ø63	28	27	26	22	M8	Rc3/8	0	30	38	80	M18x1.5	47.5 to 50.0	105	20	3	15	11	21
ø80	36	32	34	26	M12	Rc1/2	0	34	43	98	M22x1.5	56 to 59	116	25	3.5	17	13	23.5
ø100	45	41	43	28	M12	Rc1/2	0	36	51	118	M26x1.5	66 to 69	128	30	4	18	16	32

Code			Mounting dimensions							With bellows							
													ℓ				
Bore size (mm)	WF	X	TC	TD	TE	TJ	TM	TN	TK	b	d	d*	50 or less	Over 50 to 100	Over 100 to 150	Over 150 to 200	Over 200 to 300
ø40	33.5	150.5	57	16	30	85	63	95	43.5	41	40	40	25.5	41.5	58.5	75.5	108.5
ø50	37	168.5	67	18	30	94.5	80	116	46	47	47	48	22	36	49	63	90
ø63	35	171	82	20	35	92	90	130	51	45	47	48	22	36	49	63	90
ø80	48	203.5	100	25	40	109.5	115	165	58	58.5	53	55	14	26	38	49	72
ø100	53	230	121	35	50	119.5	135	205	65.5	69.5	61	65	20	32	42	53	76

Code				With switch				
Bore size (mm)	Over 300 to 400	Over 400 to 500	*1 Over 500	P	T0, T5 T2, T3	T1, T2Y T3Y, T2J	T8	T2W, T3W
					RD	RD	RD	RD
ø40	141.5	174.5	(Stroke/3.0) + 8	41.5	11	10	5	13
ø50	119	146	(Stroke/3.6) + 7.5	43	13	12	7	15
ø63	119	146	(Stroke/3.6) + 7.5	47	13	12	7	15
ø80	96	119	(Stroke/4.3) + 2.5	57	14.5	13.5	8.5	16.5
ø100	98	120	(Stroke/4.5) + 9	63	18.5	17.5	12.5	20.5

*1 : Position cannot be detected at head side stroke end.
*2 : For the ℓ dimension, round up below the decimal point.
*3 : The position of the cushion needle cannot be changed.
*4 : Refer to page 615 for dimensions of projection of T1, T2YD and HO switches.
*5 : For the dimensions of the accessories, refer to pages 470 and 471.
*6 : Non-sag block (2-dashed line) will be added depending on the stroke. Refer to page 614 for details on dimensions.

Dimensions

● Intermediate supporting hole trunnion (TF)

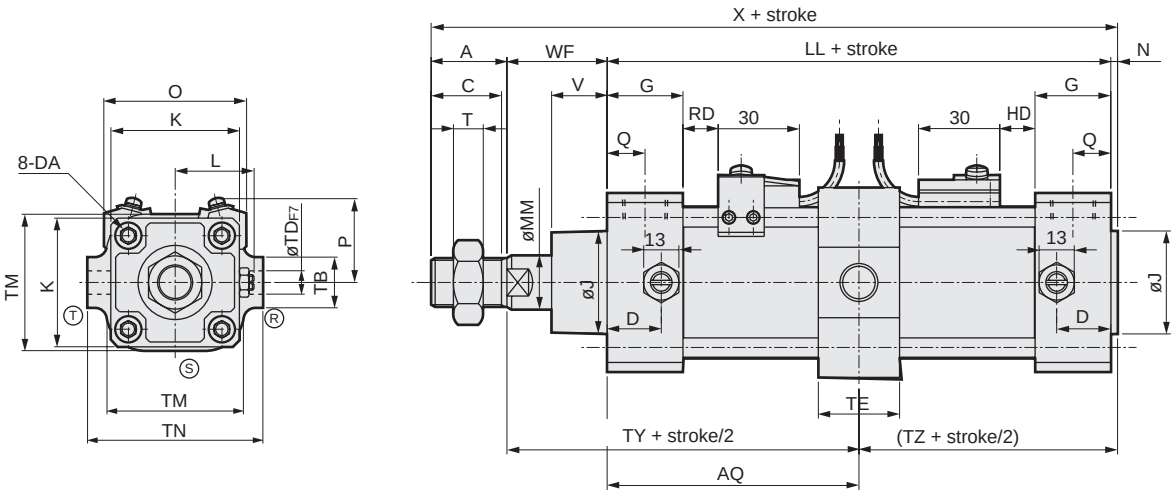

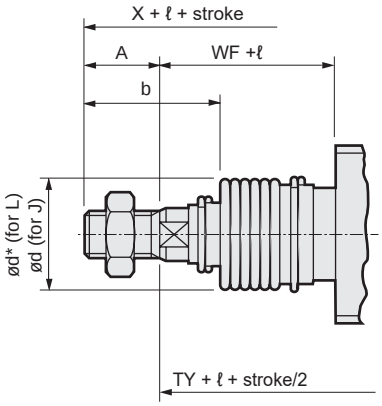

[With bellows]

Code	Intermediate trunnion (TF) Basic dimensions																	
Bore size (mm)	A	B	C	D	DA	EE	G	J	K	KK	L	LL	MM	N	Q	T	V	WF	X
ø50	28	27	26	20	M8	Rc3/8	28	38	66	M18x1.5	41 to 43.5	101	20	2.5	14	11	20.5	37	168.5
ø63	28	27	26	22	M8	Rc3/8	30	38	80	M18x1.5	47.5 to 50.0	105	20	3	15	11	21	35	171
ø80	36	32	34	26	M12	Rc1/2	34	43	98	M22x1.5	56 to 59	116	25	3.5	17	13	23.5	48	203.5
ø100	45	41	43	28	M12	Rc1/2	36	51	118	M26x1.5	66 to 69	128	30	4	18	16	32	53	230

Code	Mounting dimensions								With bellows								
												ℓ					
Bore size (mm)	AQ	TB	TD	TE	TM	TN	TY	TZ	b	d	d*	50 or less	Over 50 to 100	Over 100 to 150	Over 150 to 200	Over 200 to 300	Over 300 to 400
ø50	$50.5+\frac{Stroke}{2}$	26	12	30	70	90	87.5	53	47	47	48	22	36	49	63	90	119
ø63	$52.5+\frac{Stroke}{2}$	30	14	35	86	104	87.5	55.5	45	47	48	22	36	49	63	90	119
ø80	$58+\frac{Stroke}{2}$	35	20	40	105	134	106	61.5	58.5	53	55	14	26	38	49	72	96
ø100	$64+\frac{Stroke}{2}$	40	20	40	127	150	117	68	69.5	61	65	20	32	42	53	76	98

Code			With switch									
Bore size (mm)	Over 400 to 500	*1 Over 500	O	P	T0, T5 T2, T3		T1, T2Y T3Y, T2J		T8		T2W, T3W	
					RD	HD	RD	HD	RD	HD	RD	HD
ø50	146	(Stroke/3.6) + 7.5	73	43	13	13	12	12	7	7	15	15
ø63	146	(Stroke/3.6) + 7.5	85	47	13	13	12	12	7	7	15	15
ø80	119	(Stroke/4.3) + 2.5	105	57	14.5	14.5	13.5	13.5	8.5	8.5	16.5	16.5
ø100	120	(Stroke/4.5) + 9	121	63	18.5	18.5	17.5	17.5	12.5	12.5	20.5	20.5

*1 : For the ℓ dimension, round up below the decimal point.
*2 : Ⓡ, Ⓢ and Ⓣ indicate the cushion needle position.
*3 : Refer to page 615 for dimensions of projection of T1, T2YD and HO switches.
*4 : For the dimensions of the accessories, refer to pages 470 and 471.

SCP*3
CMK2
CMA2
SCM
SCG
SCA2
SCS2
CKV2
CAV2/ COVP/N2
SSD2
SSG
SSD
CAT
MDC2
MVC
SMG
MSD/ MSDG
FC*
STK
SRL3
SRG3
SRM3
SRT3
MRL2
MRG2
SM-25
ShkAbs
FJ
FK
Spd Contr
Ending

Dimensions

● Rod side hole trunnion (TD)

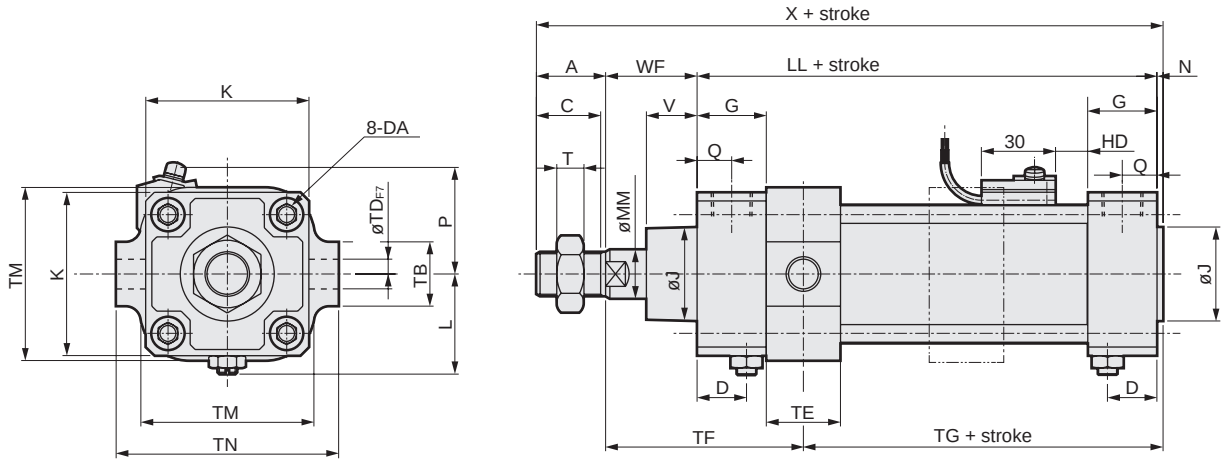

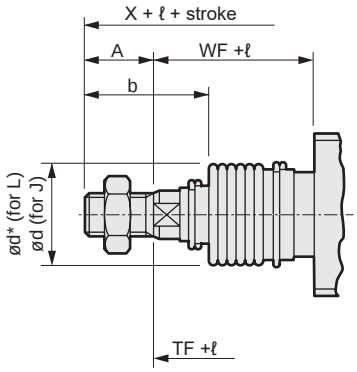

[With bellows]

Code	Rod side trunnion (TD) Basic dimensions																
Bore size (mm)	A	B	C	D	DA	EE	G	J	K	KK	L	LL	MM	N	Q	T	V
ø50	28	27	26	20	M8	Rc3/8	28	38	66	M18x1.5	41 to 43.5	101	20	2.5	14	11	20.5
ø63	28	27	26	22	M8	Rc3/8	30	38	80	M18x1.5	47.5 to 50.0	105	20	3	15	11	21
ø80	36	32	34	26	M12	Rc1/2	34	43	98	M22x1.5	56 to 59	116	25	3.5	17	13	23.5
ø100	45	41	43	28	M12	Rc1/2	36	51	118	M26x1.5	66 to 69	128	30	4	18	16	32

Code			Mounting dimensions							With bellows							
													ℓ				
Bore size (mm)	WF	X	TB	TD	TE	TF	TG	TM	TN	b	d	d*	50 or less	Over 50 to 100	Over 100 to 150	Over 150 to 200	Over 200 to 300
ø50	37	168.5	26	12	30	80	60.5	70	90	47	47	48	22	36	49	63	90
ø63	35	171	30	14	35	82.5	60.5	86	104	45	47	48	22	36	49	63	90
ø80	48	203.5	35	20	40	102	65.5	105	134	58.5	53	55	14	26	38	49	72
ø100	53	230	40	20	40	109	76	127	150	69.5	61	65	20	32	42	53	76

Code				With switch				
Bore size (mm)	Over 300 to 400	Over 400 to 500	*2 Over 500	P	T0, T5 T2, T3 HD	T1, T2Y, T3Y, T2J T2YF/M, T3YFM HD	T8 HD	T2W, T3W HD
ø50	119	146	(Stroke/3.6) + 7.5	43	13	12	7	15
ø63	119	146	(Stroke/3.6) + 7.5	47	13	12	7	15
ø80	96	119	(Stroke/4.3) + 2.5	57	14.5	13.5	8.5	16.5
ø100	98	120	(Stroke/4.5) + 9	63	18.5	17.5	12.5	20.5

*1 : Position cannot be detected at rod side stroke end.
*2 : For the ℓ dimension, round up below the decimal point.
*3 : The position of the cushion needle cannot be changed.
*4 : Refer to page 615 for dimensions of projection of T1, T2YD and HO switches.
*5 : For the dimensions of the accessories, refer to pages 470 and 471.
*6 : Non-sag block (2-dashed line) will be added depending on the stroke.
Refer to page 614 for details on dimensions.

Dimensions

● Head side hole trunnion (TE)

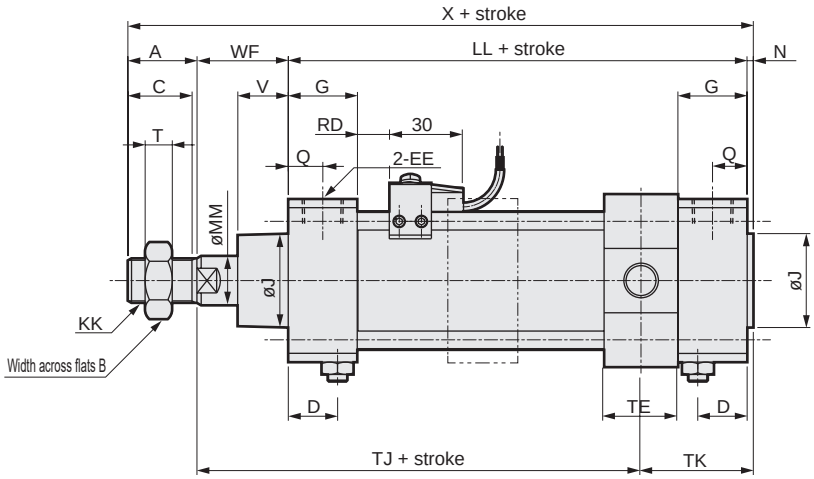

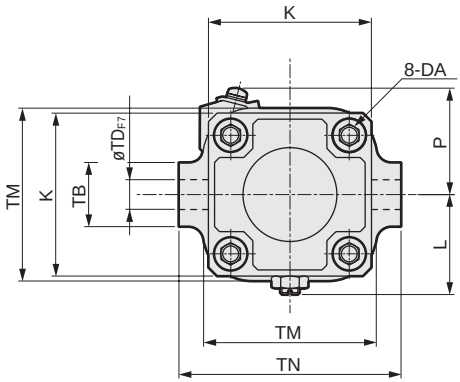

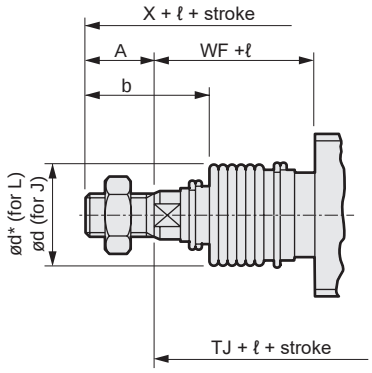

[With bellows]

Code	Head side trunnion (TE) Basic dimensions																
Bore size (mm)	A	B	C	D	DA	EE	G	J	K	KK	L	LL	MM	N	Q	T	V
ø50	28	27	26	20	M8	Rc3/8	28	38	66	M18x1.5	41 to 43.5	101	20	2.5	14	11	20.5
ø63	28	27	26	22	M8	Rc3/8	30	38	80	M18x1.5	47.5 to 50.0	105	20	3	15	11	21
ø80	36	32	34	26	M12	Rc1/2	34	43	98	M22x1.5	56 to 59	116	25	3.5	17	13	23.5
ø100	45	41	43	28	M12	Rc1/2	36	51	118	M26x1.5	66 to 69	128	30	4	18	16	32

Code		Mounting dimensions							With bellows							
												ℓ				
Bore size (mm)	WF	X	TB	TD	TE	TJ	TM	TN	TK	b	d	d*	50 or less	Over 50 to 100	Over 100 to 150	Over 150 to 200	Over 200 to 300
ø50	37	168.5	26	12	30	94.5	70	90	46	47	47	48	22	36	49	63	90
ø63	35	171	30	14	35	92	86	104	51	45	47	48	22	36	49	63	90
ø80	48	203.5	35	20	40	109.5	105	134	58	58.5	53	55	14	26	38	49	72
ø100	53	230	40	20	40	124.5	127	150	60.5	69.5	61	65	20	32	42	53	76

Code				With switch				
Bore size (mm)	Over 300 to 400	Over 400 to 500	*2 Over 500	P	T0, T5 T2, T3	T1, T2Y, T3Y, T2J T2YF/M, T3YFM	T8	T2W, T3W
					RD	RD	RD	RD
ø50	119	146	(Stroke/3.6) + 7.5	43	13	12	7	15
ø63	119	146	(Stroke/3.6) + 7.5	47	13	12	7	15
ø80	96	119	(Stroke/4.3) + 2.5	57	14.5	13.5	8.5	16.5
ø100	98	120	(Stroke/4.5) + 9	63	18.5	17.5	12.5	20.5

*1 : Position cannot be detected at head side stroke end.
*2 : For the ℓ dimension, round up below the decimal point.
*3 : The position of the cushion needle cannot be changed.
*4 : Refer to page 615 for dimensions of projection of T1, T2YD and HO switches.
*5: For the dimensions of the accessories, refer to pages 470 and 471.
*6: Non-sag block (2-dashed line) will be added depending on the stroke. Refer to page 614 for details on dimensions.

SCA2 Series common accessory dimensions (rod eye, clevis, bracket)

· The installation dimensions for the clevis, rod eye, and No. 2 bracket (øCD, CW, CQ) are all the same, and any combination is possible.
· Specify the model No. when placing an order.

CAD

● Rod eye (I)

Material: Cast iron
Painted

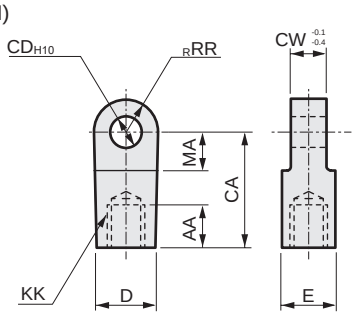

Model No.	Bore size (mm)	AA	CA	CD	CW	D	E	KK	MA	RR	Wt. (kg)
S1-I-40	40	20	50	12	18	27	27	M14x1.5	21	16	0.26
S1-I-50	50	21	50	12	18	27	27	M18x1.5	21	16	0.24
S1-I-63	63	21	50	14	20	27	27	M18x1.5	21	16	0.25
S1-I-80	80	30	70	20	28	46	41	M22x1.5	30	25	0.88
S1-I-100	100	30	70	20	28	46	41	M26x1.5	30	25	0.84

● Rod clevis (Y)

Material: Cast iron
Painted

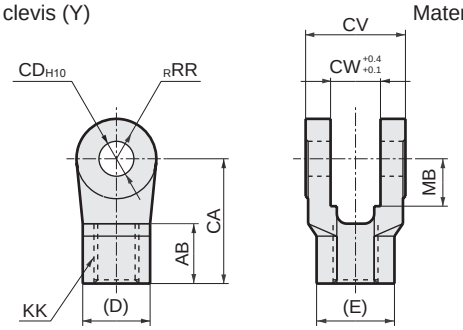

Model No.	Bore size (mm)	AB	CA	CD	CV	CW	D	E	KK	MB	RR	Wt. (kg)
S1-Y-40	40	24	50	12	36	18	27	31.2	M14x1.5	19	16	0.25
S1-Y-50	50	24	50	12	36	18	27	31.2	M18x1.5	19	16	0.24
S1-Y-63	63	24	50	14	40	20	27	31.2	M18x1.5	19	16	0.26
S1-Y-80	80	35	70	20	56	28	41	47.3	M22x1.5	30	25	0.90
S1-Y-100	100	35	70	20	56	28	41	47.3	M26x1.5	30	25	0.85

*1: A pin and a snap ring are included.
*2: The MB dimension is the effective length of the CW dimension.

● Eye bracket (B1)

Material: Cast iron
Painted

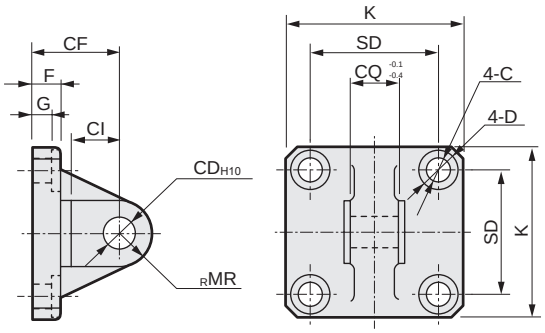

Model No.	Bore size (mm)	C	CD	CF	CI	CQ	D	F	G	K	MR	SD	Wt. (kg)
S1-B1-40	40	9	12	32	18	18	14	10	6.5	57	12	40.5	0.32
S1-B1-50	50	9	12	32	18	18	14	10	6.5	66	12	48	0.38
S1-B1-63	63	9	14	37	24	20	14	10	6.5	80	16	59	0.57
S1-B1-80	80	14	20	52	30	28	20	14	10.5	98	20	74	1.27
S1-B1-100	100	14	20	52	30	28	20	16	10.5	118	20	90	1.64

● Clevis bracket (B2)

Material: Cast iron
Painted

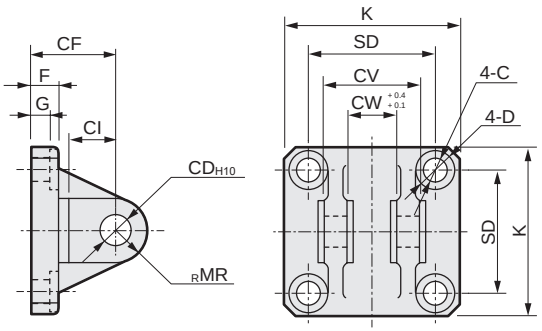

Model No.	Bore size (mm)	C	CD	CF	CI	CV	CW	D	F	G	K	MR	SD	Wt. (kg)
S1-B2-40	40	9	12	32	18	36	18	14	10	6.5	57	12	40.5	0.36
S1-B2-50	50	9	12	32	18	36	18	14	10	6.5	66	12	48	0.41
S1-B2-63	63	9	14	37	24	40	20	14	10	6.5	80	16	59	0.62
S1-B2-80	80	14	20	52	30	56	28	20	14	10.5	98	20	74	1.48
S1-B2-100	100	14	20	52	30	56	28	20	16	10.5	118	20	90	1.82

Note: A pin and a snap ring are included.

● Eye bracket (B3)

Material: Cast iron
Painted

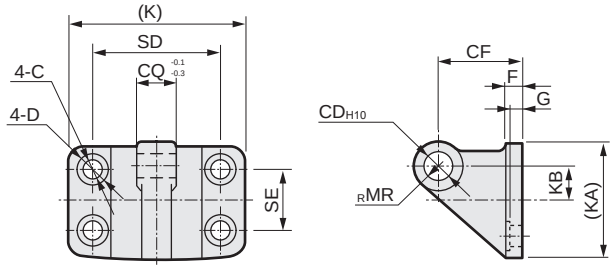

Model No.	Bore size (mm)	C	CD	CF	CQ	D	F	G	K	KA	KB	MR	SD	SE	Wt. (kg)
S1-B3-40	ø40/ø50	9	12	40	18	14	8	6.5	85	57	17.5	12	65	35	0.44
S1-B3-63	ø63	11	14	50	20	17	10	8	105	67	20	16	80	40	0.77
S1-B3-80	ø80/ø100	14	20	65	28	20	12	10	130	93	30	20	100	60	1.64

Accessory dimensions

● Trunnion No. 2 bracket dimensions

Material: Cast iron
Painted

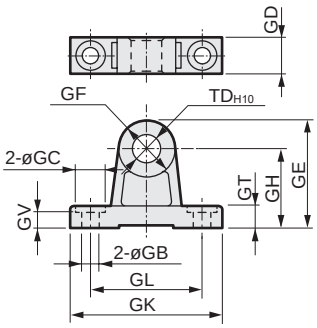

Code / Model No.	GB	GC	GD	GE	GF	GH	GK	GL	GT	GV	TD	Wt. (kg)
S1-B4-40	9	17	19	61	32	45	80	60	12	11	16	0.25
S1-B4-50	9	17	19	63	36	45	85	65	12	11	18	0.28
S1-B4-63	11	22	24	80	40	60	100	75	14	13	20	0.52
S1-B4-80	14	24	26	85	50	60	115	85	14	13	25	0.70
S1-B4-100	14	24	35	107	64	75	130	100	17	16	35	1.48

Note: The bracket is provided as 2 pcs./set.

● Pin dimensions

Material: Steel
Zinc chromate
treatment

Pin (P): For clevis bracket/rod clevis/
clevis bracket

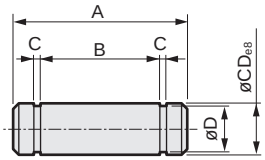

Model No.	Bore size (mm)	A	B	C	D	CD	Applicable snap ring	Wt. (kg)
S1-P-40	40, 50	43.5	36.2	1.15	11.5	12	C for shaft 12	0.04
S1-P-63	63	47.5	40.2	1.15	13.4	14	C for shaft 14	0.06
S1-P-80	80, 100	64	56.2	1.35	19	20	C for shaft 20	0.16

Note: A snap ring is included.

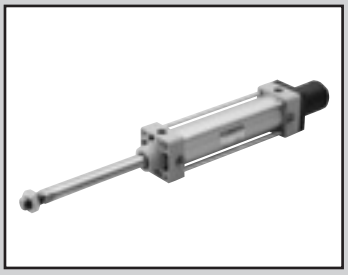

Medium bore size cylinder
Double acting/stroke adjustable (push)

SCA2-P Series

● Bore size: ø40/ø50/ø63/ø80/ø100

JIS symbol

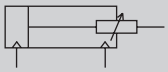

RoHS CAD

Specifications

Item		SCA2-P (stroke adjustable/push)				
Bore size	mm	ø40	ø50	ø63	ø80	ø100
Actuation		Double acting				
Working fluid		Compressed air				
Max. working pressure	MPa	1.0 (≈150 psi, 10 bar)				
Min. working pressure	MPa	0.1 (≈15 psi, 1 bar)				
Proof pressure	MPa	1.6 (≈230 psi, 16 bar)				
Ambient temperature	°C	-10 (14°F) to 60 (140°F) (no freezing)				
Port size		Rc1/4	Rc3/8		Rc1/2	
Stroke tolerance	mm	$^{+0.9}_{0}$(to 360), $^{+1.4}_{0}$(to 800)				
Working piston speed	mm/s	50 to 1000 (Operate within the allowable absorbed energy.)				
Cushion		Air cushion				
Effective air cushion length	mm	14.6	16.6	16.6	20.6	23.6
Adjustable stroke range	mm	25, 50, 75, 100				
Lubrication		Not required (use turbine oil class 1 ISO VG32 if necessary for lubrication)				
Allowable absorbed energy J	Cushioned	4.29	8.37	15.8	27.9	49.8
	Without cushion	0.067	0.079	0.079	0.201	0.301
		Without any cushion, this product cannot absorb large energy generated by an external load. We recommend using an external shock absorber.				

Stroke

Bore size (mm)	Standard stroke (mm)	Max. stroke (mm)	Min. stroke (mm)
ø40	25/50/75/100/ 150/200/250/ 300/350/400/ 450/500	600	25
ø50			
ø63			
ø80		700	
ø100		800	

*1: The custom stroke is available in 1 mm increments.

Min. stroke with switch

● T0/T5 min. stroke with switches

	Different surface mounting				Same surface mounting				Center trunnion mounting				Rod side trunnion mounting No position detection at rod side stroke end.	Head side trunnion mounting No position detection at head side stroke end.
Switch quantity	1	2	3	4	1	2	3	4	1	2	3	4	1	1
ø40	25(25)	25(25)	40(40)	60(60)	25(25)	60(45)	105(75)	150(105)	110(110)	110(110)	175(145)	175(145)	50(50)	50(50)
ø50	25(25)	25(25)	40(40)	60(60)	25(25)	25(25)	65(50)	65(60)	135(135)	135(135)	135(135)	135(135)	60(60)	60(60)
ø63	25(25)	25(25)	40(40)	60(60)	25(25)	25(25)	70(55)	70(60)	110(95)	110(95)	110(100)	110(100)	50(45)	50(45)
ø80	25(25)	25(25)	45(45)	65(65)	25(25)	25(25)	70(55)	70(65)	115(85)	115(85)	115(105)	115(105)	55(40)	55(40)
ø100	25(25)	25(25)	45(45)	70(70)	25(25)	25(25)	70(55)	70(70)	125(95)	125(95)	125(115)	125(115)	60(45)	60(45)

*1: The values in ( ) are of T*V (L-shaped lead wire).
*2: When the stroke is 15 mm or less, the two switches could turn ON at the same time. In this case, adjust switch mounting positions to be as far apart as possible.

● T8 min. stroke with switch

	Different surface mounting				Same surface mounting				Center trunnion mounting				Rod side trunnion mounting No position detection at rod side stroke end.	Head side trunnion mounting No position detection at head side stroke end.
Switch quantity	1	2	3	4	1	2	3	4	1	2	3	4	1	1
ø40	25(25)	25(25)	40(40)	60(60)	25(25)	50(35)	95(65)	140(95)	95(85)	95(85)	155(125)	155(125)	45(40)	45(40)
ø50	25(25)	25(25)	40(40)	60(60)	25(25)	25(25)	70(55)	70(60)	115(115)	115(115)	135(135)	135(135)	50(50)	50(50)
ø63	25(25)	25(25)	40(40)	60(60)	25(25)	25(25)	70(55)	70(60)	95(75)	95(75)	110(110)	110(110)	45(35)	45(35)
ø80	25(25)	25(25)	45(45)	65(65)	25(25)	25(25)	70(55)	70(65)	110(70)	110(70)	115(115)	115(115)	50(35)	50(35)
ø100	25(25)	25(25)	45(45)	65(65)	25(25)	25(25)	70(55)	70(65)	110(80)	110(80)	125(125)	125(125)	55(40)	55(40)

*1: The values in ( ) are of T*V (L-shaped lead wire).
*2: When the stroke is 15 mm or less, the two switches could turn ON at the same time. In this case, adjust switch mounting positions to be as far apart as possible.

Min. stroke with switch

● T2/T3 min. stroke with switches

	Different surface mounting				Same surface mounting				Center trunnion mounting				Rod side trunnion mounting No position detection at rod side stroke end.	Head side trunnion mounting No position detection at head side stroke end.
Switch quantity	1	2	3	4	1	2	3	4	1	2	3	4	1	1
ø40	25(25)	25(25)	25(25)	40(40)	25(25)	60(45)	105(75)	150(105)	105(75)	105(75)	165(135)	165(135)	50(35)	50(35)
ø50	25(25)	25(25)	25(25)	40(40)	25(25)	25(25)	60(45)	60(45)	105(75)	105(75)	105(75)	105(75)	45(30)	45(30)
ø63	25(25)	25(25)	25(25)	40(40)	25(25)	25(25)	60(45)	60(45)	110(80)	110(80)	110(85)	110(85)	50(35)	50(35)
ø80	25(25)	25(25)	30(30)	45(45)	25(25)	25(25)	60(45)	60(45)	115(85)	115(85)	115(90)	115(90)	55(40)	55(40)
ø100	25(25)	25(25)	30(30)	45(45)	25(25)	25(25)	60(45)	60(45)	125(95)	125(95)	125(100)	125(100)	60(45)	60(45)

*1: The values in ( ) are of T*V (L-shaped lead wire).
*2: When the stroke is 15 mm or less, the two switches could turn ON at the same time. In this case, adjust switch mounting positions to be as far apart as possible.

● T1/T2Y/T3Y/T2YD min. stroke with switches

	Different surface mounting				Same surface mounting				Center trunnion mounting				Rod side trunnion mounting No position detection at rod side stroke end.	Head side trunnion mounting No position detection at head side stroke end.
Switch quantity	1	2	3	4	1	2	3	4	1	2	3	4	1	1
ø40	20(10)	20(15)	25(25)	40(40)	20(10)	60(45)	105(75)	150(105)	105(75)	105(75)	165(135)	165(135)	50(35)	50(35)
ø50	15(10)	15(15)	25(25)	40(40)	15(10)	15(15)	60(45)	60(45)	100(70)	100(70)	100(75)	100(75)	45(30)	45(30)
ø63	15(10)	15(15)	25(25)	40(40)	15(10)	15(15)	60(45)	60(45)	105(75)	105(75)	105(85)	105(85)	50(35)	50(35)
ø80	15(10)	15(15)	30(30)	45(45)	15(10)	15(15)	60(45)	60(45)	110(80)	110(80)	110(90)	110(90)	55(40)	55(40)
ø100	10(10)	15(15)	30(30)	45(45)	10(10)	15(15)	60(45)	60(45)	120(90)	120(90)	120(100)	120(100)	60(45)	60(45)

*1: The values in ( ) are of T*V (L-shaped lead wire). T2YD does not have an L-shaped lead wire (V).
*2: When the stroke is 15 mm or less, the two switches could turn ON at the same time. In this case, adjust switch mounting positions to be as far apart as possible.

● T2W/T3W min. stroke with switches

	Different surface mounting				Same surface mounting				Center trunnion mounting				Rod side trunnion mounting No position detection at rod side stroke end.	Head side trunnion mounting No position detection at head side stroke end.
Switch quantity	1	2	3	4	1	2	3	4	1	2	3	4	1	1
ø40	25(25)	25(25)	25(25)	25(25)	25(25)	65(50)	110(80)	155(110)	110(80)	110(80)	170(140)	170(140)	50(35)	50(35)
ø50	25(25)	25(25)	25(25)	25(25)	25(25)	25(25)	65(40)	65(40)	110(80)	110(80)	110(80)	110(80)	50(35)	50(35)
ø63	25(25)	25(25)	25(25)	25(25)	25(25)	25(25)	65(40)	65(40)	115(85)	115(85)	115(85)	115(85)	55(40)	55(40)
ø80	25(25)	25(25)	25(25)	25(25)	25(25)	25(25)	60(40)	60(40)	120(90)	120(90)	120(90)	120(90)	55(40)	55(40)
ø100	25(25)	25(25)	25(25)	25(25)	25(25)	25(25)	60(40)	60(40)	130(100)	130(100)	130(100)	130(100)	60(45)	60(45)

*1: The values in ( ) are of T*V (L-shaped lead wire).
*2: When the stroke is 15 mm or less, the two switches could turn ON at the same time. In this case, adjust switch mounting positions to be as far apart as possible.

SCP*3
CMK2
CMA2
SCM
SCG
SCA2
SCS2
CKV2
CAV2/COVP/N2
SSD2
SSG
SSD
CAT
MDC2
MVC
SMG
MSD/MSDG
FC*
STK
SRL3
SRG3
SRM3
SRT3
MRL2
MRG2
SM-25
ShkAbs
FJ
FK
Spd Contr
Ending

Switch specifications (T-switch)

● 1-color/2-color LED/for AC magnetic field proof

Item	2-wire proximity	2-wire proximity			3-wire proximity				2-wire reed							2-wire proximity
	T1H/T1V	T2H/T2V/T2JH/T2JV	T2YH/T2YV	T2WH/T2WV	T3H/T3V	T3PH/T3PV	T3YH/T3YV	T3WH/T3WV	T0H/T0V		T5H/T5V		T8H/T8V			T2YD (*4) T2YDT
Applications	Programming controller relay, compact solenoid valve	Dedicated for programmable controller			For programmable controller, relay				For programmable controller, relay		For programmable controller, relay (no lamp), serial		For programmable controller, relay			Dedicated for programmable controller
Output method	-				NPN output	PNP output	NPN output	NPN output	-							
Pwr. supp. V.	-				10 to 28 VDC				-							
Load voltage	85 to 265 VAC	10 to 30 VDC		24 VDC ±10%	30 VDC or less				12/24 VDC	110 VAC	5/12/24 VDC	110 VAC	12/24 VDC	110 VAC	220 VAC	24 VDC ±10%
Load current	5 to 100 mA	5 to 20 mA (*3)			100 mA or less		50 mA or less		5 to 50 mA	7 to 20 mA	50 mA or less	20 mA or less	5 to 50 mA	7 to 20 mA	7 to 10 mA	5 to 20 mA
Indicator	LED (Lit when ON)	LED (Lit when ON)	Red/green LED (Lit when ON)	Red/green LED (Lit when ON)	LED (Lit when ON)	Yellow LED (Lit when ON)	Red/green LED (Lit when ON)	Red/green LED (Lit when ON)	LED (Lit when ON)		No indicator lamp		LED (Lit when ON)			Red/green LED (Lit when ON)
Leakage current	≤ 1 mA at 100 VAC, ≤ 2 mA at 200 VAC	1 mA or less			10 μA or less				0 mA							1 mA or less
Weight g	1 m:33 3 m:87 5 m:142	1 m:18 3 m:49 5 m:80	1 m:33 3 m:87 5 m:142	1 m:18 3 m:49 5 m:80	1 m:18 3 m:49 5 m:80		1 m:33 3 m:87 5 m:142	1 m:18 3 m:49 5 m:80	1 m:18 3 m:49 5 m:80				1 m:33 3 m:87 5 m:142			1 m:61 3 m:166 5 m:272

*1 : Refer to Ending Page 1 for detailed switch specifications and dimensions.
*2 : Switches other than the above models, such as switches with connectors, are also available. Refer to Ending Page 1.
*3 : Max. load current: 20 mA at 25°C. The current is lower than 20 mA if the operating ambient temperature around the switch is higher than 25˚C. (5 to 10 mA at 60°C)
*4 : Switch for AC magnetic field (T2YD/T2YDT) cannot be used in DC magnetic field.

Cylinder weight

(Unit: kg)

Bore size (mm)	Product weight when stroke (S) = 0 mm						Switch weight	Mounting bracket weight	Additional weight per S = 100mm
	Basic (00)	Foot (LB)	Flange (FA, FB)	Eye bracket (CA)	Clevis bracket (CB)	Trunnion (TA, TB, TC)		T type	
ø40	1.20	1.37	1.61	1.52	1.56	1.58	Refer to the weight in the switch specifications.	0.024	0.78
ø50	1.70	1.95	2.19	2.08	2.11	2.24		0.022	0.99
ø63	2.16	2.53	3.25	2.73	2.78	3.01		0.020	1.03
ø80	3.80	4.54	5.66	5.07	5.28	5.14		0.026	2.15
ø100	5.40	6.31	8.14	7.04	7.22	7.97		0.024	2.47

(Example) Product weight of SCA2-P-LB-50B-200-25-TOH-D

- Product weight for 0 mm stroke ..... 1.95 kg
- Additional weight for 200 mm stroke ..... $0.99 \times \frac{200}{100} = 1.98$ kg
- Weight of 2 TOH switches ..... 0.018 x 2 = 0.036 kg
- Weight of 2 mounting brackets ..... 0.022 x 2 = 0.044 kg
- Product weight ..... 1.95 + 1.98 + 0.036 + 0.044 = 4.010 kg

Theoretical thrust table

(Unit: N)

Bore size (mm)	Operating direction	Working pressure MPa										
		0.1	0.15	0.2	0.3	0.4	0.5	0.6	0.7	0.8	0.9	1.0
ø40	Push/Pull	1.06×10^2	1.58×10^2	2.11×10^2	3.17×10^2	4.22×10^2	5.28×10^2	6.33×10^2	7.39×10^2	8.44×10^2	9.50×10^2	1.06×10^3
ø50	Push/Pull	1.65×10^2	2.47×10^2	3.30×10^2	4.95×10^2	6.60×10^2	8.25×10^2	9.90×10^2	1.15×10^3	1.32×10^3	1.48×10^3	1.65×10^3
ø63	Push/Pull	2.80×10^2	4.20×10^2	5.61×10^2	8.41×10^2	1.12×10^3	1.40×10^3	1.68×10^3	1.96×10^3	2.24×10^3	2.52×10^3	2.80×10^3
ø80	Push/Pull	4.54×10^2	6.80×10^2	9.07×10^2	1.36×10^3	1.81×10^3	2.27×10^3	2.72×10^3	3.17×10^3	3.63×10^3	4.08×10^3	4.54×10^3
ø100	Push/Pull	7.15×10^2	1.07×10^3	1.43×10^3	2.14×10^3	2.86×10^3	3.57×10^3	4.29×10^3	5.00×10^3	5.72×10^3	6.43×10^3	7.15×10^3

SCP*3
CMK2
CMA2
SCM
SCG
SCA2
SCS2
CKV2
CAV2/ COVP/N2
SSD2
SSG
SSD
CAT
MDC2
MVC
SMG
MSD/ MSDG
FC*
STK
SRL3
SRG3
SRM3
SRT3
MRL2
MRG2
SM-25
ShkAbs
FJ
FK
Spd Contr
Ending

How to order

No switch (built-in magnet for switch)

SCA2-P - LB - 40 ( ) B - 100 - 25 ——— S I

With switch (built-in magnet for switch)

SCA2-P - LB - 40 ( ) B - 100 - 25 - T0H - R - S I

Ⓐ Mounting *1

Ⓑ Bore size

Ⓒ Port thread

Ⓓ Cushion

Ⓔ Stroke *2

Ⓕ Adjustable stroke range

Ⓖ Switch model No. *4

Ⓗ Switch quantity *5

Ⓘ Option *6 *7

Ⓙ Accessory *8

Code	Description
Ⓐ Mounting	
00	Basic
LB	Axial foot
FA	Rod side flange
FB	Head side flange
TC	Intermediate trunnion
TA	Rod side trunnion
TB	Head side trunnion
TF	Intermediate supporting hole trunnion (ø40 is not available)
TD	Rod side hole trunnion (ø40 is not available)
TE	Head side hole trunnion (ø40 is not available)
Ⓑ Bore size (mm)	
40	ø40
50	ø50
63	ø63
80	ø80
100	ø100
Ⓒ Port thread	
Blank	Rc thread
N	NPT thread (made-to-order product)
G	G thread (made-to-order product)
Ⓓ Cushion	
B	Both sides cushioned
R	Rod side cushioned
H	Head side cushioned
N	Without cushion

Ⓔ Stroke (mm)

Bore size	Stroke *3	Custom stroke
ø40	**25 to 600**	**In 1 mm increments**
ø50	**25 to 600**	
ø63	**25 to 600**	
ø80	**25 to 700**	
ø100	**25 to 800**	

Ⓕ Adjustable stroke range (mm)

25, 50, 75, 100

Ⓖ Switch model No.

Refer to the switch model numbers on the next page.

*** Lead wire length**	
Blank	1 m (standard)
3	3 m (option)
5	5 m (option)

Ⓗ Switch quantity	
R	1 on rod side
H	1 on head side
D	2
T	3

Ⓘ Option

		Max. ambient temp.	Instantaneous max. temp.
J	Bellows	100°C	200°C
L	Bellows	250°C	400°C
M	Piston rod material (stainless steel)		
Blank	Cushion needle position R (standard)		
S	Cushion needle position S		
T	Cushion needle position T		
P6	Copper and PTFE free (made-to-order product)		

Ⓙ Accessory	
I	Rod eye
Y	Rod clevis (pin and snap ring included)
B4	Trunnion No. 2 bracket (2 pcs./set)

⚠ Precautions for model No. selection

*1 : Mounting bracket will be shipped with the product. (The axial foot, head side flange and trunnion are assembled at shipment.)
*2 : If the stroke exceeds the max. stroke, refer to Ending Page 69.
*3 : Refer to pages 472 and 473 for the min. stroke with switch.
*4 : Switches are shipped with the product.
*5 : When selecting TA, TD, TB or TE mounting, the switch quantity is limited to "H" (1 on head side) for TA and TD, and "R" (1 on rod side) for TB and TE.
*6 : The instantaneous max. temperature is the temperature when sparks, cutting chips, etc., instantaneously contact the bellows.
*7 : When selecting TA, TD, TB or TE mounting format, the cushion needle position is blank and fixed at S, with no options available.
*8 : "I" and "Y" cannot be selected together.
*9 : Refer to Ending Page 85 for custom specifications of rod end form.
*10: Refer to page 448 for combinations of variations/ options.

[Example of model No.]

SCA2-P-LB-40B-100-25-T0H-R-SI

Model: Medium bore size cylinder, double acting/stroke adjustable (push)

Ⓐ Mounting	: Axial foot
Ⓑ Bore size	: ø40 mm
Ⓒ Port thread	: Rc thread
Ⓓ Cushion	: With two-sided air cushion
Ⓔ Stroke	: 100 mm
Ⓕ Adjustable stroke range	: 25 mm
Ⓖ Switch model No.	: Reed T0H switch, lead wire length 1 m
Ⓗ Switch quantity	: 1 on rod side
Ⓘ Option	: Cushion needle position S
Ⓙ Accessory	: Rod eye

[F] Switch model No.

T-switch model No.						
Axial lead wire	Radial lead wire	Contact	Voltage AC	Voltage DC	Indicator	Lead wire
T0H*	T0V*	Reed	●	●	1-color LED	2-wire
T5H*	T5V*	Reed	●	●	No indicator lamp	2-wire
T8H*	T8V*	Reed	●	●	1-color LED	2-wire
T1H*	T1V*	Proximity	●		1-color LED	2-wire
T2H*	T2V*	Proximity		●	1-color LED	2-wire
T3H*	T3V*	Proximity		●	1-color LED	3-wire
T2WH*	T2WV*	Proximity		●	2-color LED	2-wire
T2YH*	T2YV*	Proximity		●	2-color LED	2-wire
T3WH*	T3WV*	Proximity		●	2-color LED	3-wire
T3YH*	T3YV*	Proximity		●	2-color LED	3-wire
T3PH*	T3PV*	Proximity		●	1-color LED	3-wire
T2YD*	-	Proximity		●	2-color LED for AC magnetic field	2-wire
T2YDT*	-	Proximity		●	2-color LED for AC magnetic field	2-wire
T2JH*	T2JV*	Proximity		●	1-color LED off-delay	2-wire

How to order switch

[T-switch]

● Switch body + mounting bracket set

SCA2 - T0H - 40

- T0H: Switch model No. (Item Ⓕ)
- 40: Bore size (Item Ⓑ on page 476)

● Switch body only

SW - T0H

- T0H: Switch model No. (Item Ⓕ)

* Contact CKD when using an environment-friendly T-switch.

● Switch mounting bracket set

SCA2 - TS - 40

- TS: Mounting bracket
- 40: Bore size (Item Ⓑ on page 476)

[T2YD switch]

● Switch body + mounting bracket set

SCA2 - T2YD - 40

- T2YD: Switch model No. (Item Ⓖ on page 476)
- 40: Bore size (Item Ⓑ on page 476)

● Switch body only

SW - T2YD

- T2YD: Switch model No. (Item Ⓖ on page 476)

● Mounting bracket set

SCA2 - T - 40

- 40: Bore size (Item Ⓑ on page 476)

How to order mounting bracket

Bore size (mm) / Mounting bracket	ø40	ø50	ø63	ø80	ø100
Flange (FA)	S1-FA-40	S1-FA-50	S1-FA-63	S1-FA-80	S1-FA-100

*1 : For material of the mounting bracket, refer to page 456.
*2 : Mounting brackets are supplied with mounting bolts.

Internal structure and parts list

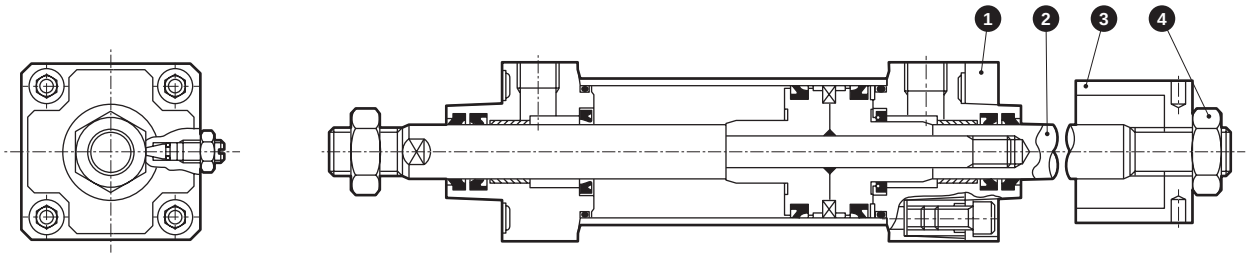

Note: Materials of the parts not listed below are the same as those of SCA2 Series (double acting/single rod) on page 456.

No.	Part name	Material	Remarks	No.	Part name	Material	Remarks
1	Plate	Steel	Manganese phosphate treatment	3	Adjustable stopper	Steel	Manganese phosphate treatment
2	Piston rod (2)	Steel	Industrial chrome plating	4	Lock nut	Steel	Zinc chromate

*Part No. 14 wear ring is not used.

Repair parts list

(Numbering of repair parts follows that in the internal structure of the SCA2 Series (page 456).)

Bore size (mm)	Kit No.	Repair parts No.
ø40	SCA2-P-40K	❸ ❹ ❼ ❽ ⓫ ⓴
ø50	SCA2-P-50K	
ø63	SCA2-P-63K	
ø80	SCA2-P-80K	
ø100	SCA2-P-100K	

Note: Specify the kit No. when placing an order.

dimensions

● Axial foot (LB)

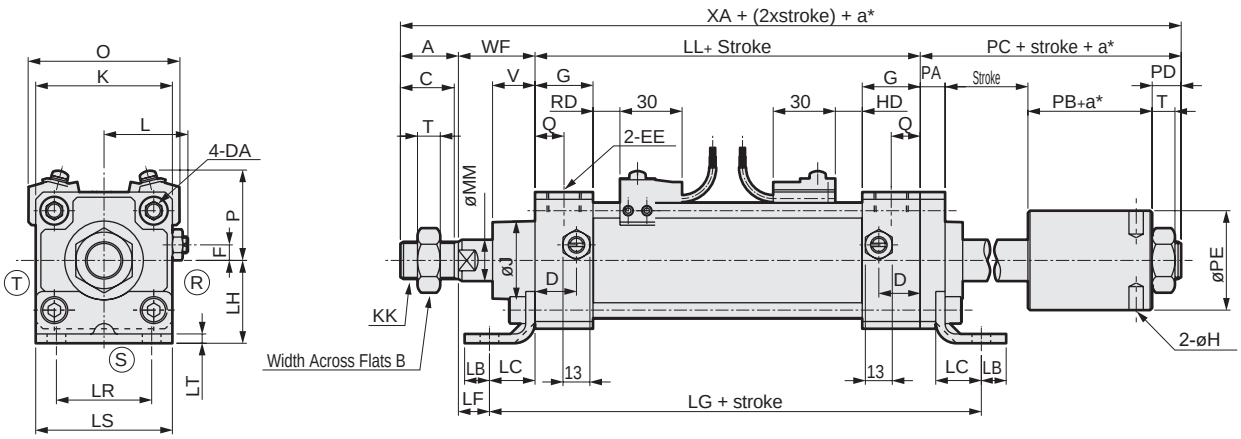

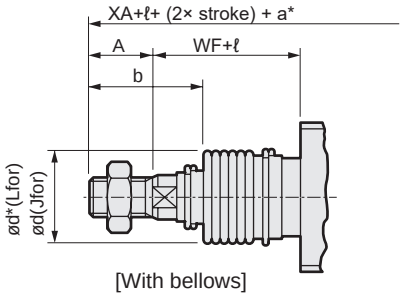

[With bellows]

Code / Bore size (mm)	A	B	C	D	DA	EE	F	G	J	H	K	KK	L	LL	MM	PA	PB	PC	PD	PE	PF	Q
ø40	22	22	20	18	M8	Rc 1/4	7.5	26	31	6 depth 8	57	M 14 x 1.5	38 to 39.5	93	16	12	29	52	11	40	6	13
ø50	28	27	26	20	M8	Rc 3/8	0	28	38	6 depth 10	66	M 18 x 1.5	41 to 43.5	101	20	12	35	61	14	48	6	14
ø63	28	27	26	22	M8	Rc 3/8	0	30	38	6 depth 10	80	M 18 x 1.5	47.5 to 50	105	20	16	31	61	14	48	6	15
ø80	36	32	34	26	M12	Rc 1/2	0	34	43	10 depth 12	98	M 22 x 1.5	56 to 59	116	25	19	33	68	16	60	10	17
ø100	45	41	43	28	M12	Rc 1/2	0	36	51	10 depth 15	118	M 26 x 1.5	66 to 69	128	30	19	50	90	21	70	10	18

Code						With switch										Mounting dimensions								
Bore size(mm)	T	V	WF	XA	XF	O	P	T0, T5 T2, T3		T1, T2Y T3Y, T2J		T8		T2W, T3W		LB	LC	LD	LF	LG	LH	LR	LS	LT
								RD	HD	RD	HD	RD	HD	RD	HD									
ø40	8	18.5	33.5	200.5	55.5	66	41.5	11	11	10	10	5	5	13	13	10	19.5	9	14	140.8	40	40	57	3.2
ø50	11	20.5	37	227	65	73	43	13	13	12	12	7	7	15	15	12	22	9	15	152.5	40	46	66	4.5
ø63	11	21	35	229	63	85	47	13	13	12	12	7	7	15	15	12	30	11	5	176.5	50	60	80	4.5
ø80	13	23.5	48	268	84	105	57	14.5	14.5	13.5	13.5	8.5	8.5	16.5	16.5	14	37	14	11	203	60	74	98	6.0
ø100	16	32	53	316	98	121	63	18.5	18.5	17.5	17.5	12.5	12.5	20.5	20.5	21	31	14	12	203	67	80	118	6.0

Code	With bellows										
	ℓ										
Bore size(mm)	b	d	d*	50 or less	Over 50 100 or less	Over 100 to 150	Over 150 to 200	Over 200 to 300	Over 300 to 400	Over 400 to 500	*1 500Over
ø40	41	40	40	25.5	41.5	58.5	75.5	108.5	141.5	174.5	(Stroke/3.0) + 8
ø50	47	47	48	22	36	49	63	90	119	146	(stroke/3.6) + 7.5
ø63	45	47	48	22	36	49	63	90	119	146	(stroke/3.6) + 7.5
ø80	58.5	53	55	14	26	38	49	72	96	119	(Stroke/4.3) + 2.5
ø100	69.5	61	65	20	32	42	53	76	98	120	(Stroke/4.5) + 9

*1 : For the L dimension, round up below the decimal point.
*2 : Ⓡ, Ⓢ and Ⓣ indicate the cushion needle position.
*3 : In the foot mounting, the pitch in the axial direction differs from that of the standard.
*4 : Refer to page 615 for dimensions of projecting section of T2YD switch.
* a: Adjustable stroke.

* Installation dimensions of other mounting are the same as those of the SCA2 (standard). Refer to pages 458 to 469.
* For the dimensions of the accessories, refer to pages 470 and 471.

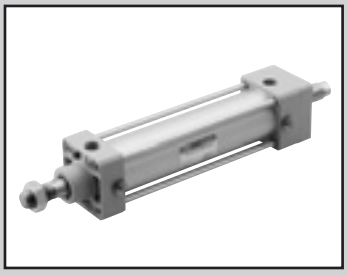

Medium bore size cylinder
Double acting/stroke adjustable (pull)

SCA2-R Series

● Bore size: ø40/ø50/ø63/ø80/ø100

JIS symbol

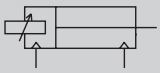

RoHS CAD

Specifications

Item		SCA2-R (stroke adjustable/pull)				
Bore size mm		ø40	ø50	ø63	ø80	ø100
Actuation		Double acting				
Working fluid		Compressed air				
Max. working pressure MPa		1.0 (≈150 psi, 10 bar)				
Min. working pressure MPa		0.05 (≈7.3 psi, 0.5 bar)				
Proof pressure MPa		1.6 (≈230 psi, 16 bar)				
Ambient temperature °C		-10 (14°F) to 60 (140°F) (no freezing)				
Port size		Rc1/4	Rc3/8		Rc1/2	
Stroke tolerance mm		$^{+0.9}_{0}$(to 360), $^{+1.4}_{0}$(to 800)				
Working piston speed mm/s		50 to 1000 (Operate within the allowable absorbed energy.)				
Cushion		Air cushion				
Effective air cushion length mm		14.6	16.6	16.6	20.6	23.6
Adjustable stroke range mm		25, 50, 75, 100				
Lubrication		Not required (use turbine oil class 1 ISO VG32 if necessary for lubrication)				
Allowable absorbed energy J	Cushioned	4.29	8.37	15.8	27.9	49.8
	Without cushion	0.067	0.079	0.079	0.201	0.301
		Without any cushion, this product cannot absorb large energy generated by an external load. We recommend using an external shock absorber.				

Stroke

Bore size (mm)	Standard stroke (mm)	Max. stroke (mm)	Min. stroke (mm)
ø40	25/50/75/100/150/200/250/300/350/400/450/500	600	25
ø50			
ø63			
ø80		700	
ø100		800	

*1: The custom stroke is available in 1 mm increments.

Min. stroke with switch

● T0/T5 min. stroke with switches

	Different surface mounting				Same surface mounting				Center trunnion mounting				Rod side trunnion mounting No position detection at rod side stroke end.	Head side trunnion mounting No position detection at head side stroke end.
Switch quantity	1	2	3	4	1	2	3	4	1	2	3	4	1	1
ø40	25(25)	25(25)	40(40)	60(60)	25(25)	60(45)	105(75)	150(105)	110(110)	110(110)	175(145)	175(145)	50(50)	50(50)
ø50	25(25)	25(25)	40(40)	60(60)	25(25)	25(25)	65(50)	65(60)	135(135)	135(135)	135(135)	135(135)	60(60)	60(60)
ø63	25(25)	25(25)	40(40)	60(60)	25(25)	25(25)	70(55)	70(60)	110(95)	110(95)	110(100)	110(100)	50(45)	50(45)
ø80	25(25)	25(25)	45(45)	65(65)	25(25)	25(25)	70(55)	70(65)	115(85)	115(85)	115(105)	115(105)	55(40)	55(40)
ø100	25(25)	25(25)	45(45)	70(70)	25(25)	25(25)	70(55)	70(70)	125(95)	125(95)	125(115)	125(115)	60(45)	60(45)

*1: The values in ( ) are of T*V (L-shaped lead wire).
*2: When the stroke is 15 mm or less, the two switches could turn ON at the same time. In this case, adjust switch mounting positions to be as far apart as possible.

● T8 min. stroke with switch

	Different surface mounting				Same surface mounting				Center trunnion mounting				Rod side trunnion mounting No position detection at rod side stroke end.	Head side trunnion mounting No position detection at head side stroke end.
Switch quantity	1	2	3	4	1	2	3	4	1	2	3	4	1	1
ø40	25(25)	25(25)	40(40)	60(60)	25(25)	50(35)	95(65)	140(95)	95(85)	95(85)	155(125)	155(125)	45(40)	45(40)
ø50	25(25)	25(25)	40(40)	60(60)	25(25)	25(25)	70(55)	70(60)	115(115)	115(115)	135(135)	135(135)	50(50)	50(50)
ø63	25(25)	25(25)	40(40)	60(60)	25(25)	25(25)	70(55)	70(60)	95(75)	95(75)	110(110)	110(110)	45(35)	45(35)
ø80	25(25)	25(25)	45(45)	65(65)	25(25)	25(25)	70(55)	70(65)	100(70)	100(70)	115(115)	115(115)	50(35)	50(35)
ø100	25(25)	25(25)	45(45)	65(65)	25(25)	25(25)	70(55)	70(65)	110(80)	110(80)	125(125)	125(125)	55(40)	55(40)

*1: The values in ( ) are of T*V (L-shaped lead wire).
*2: When the stroke is 15 mm or less, the two switches could turn ON at the same time. In this case, adjust switch mounting positions to be as far apart as possible.

Min. stroke with switch

● T2/T3 min. stroke with switches

	Different surface mounting				Same surface mounting				Center trunnion mounting				Rod side trunnion mounting No position detection at rod side stroke end.	Head side trunnion mounting No position detection at head side stroke end.
Switch quantity	1	2	3	4	1	2	3	4	1	2	3	4	1	1
ø40	25(25)	25(25)	25(25)	40(40)	25(25)	60(45)	105(75)	150(105)	105(75)	105(75)	165(135)	165(135)	50(35)	50(35)
ø50	25(25)	25(25)	25(25)	40(40)	25(25)	25(25)	60(45)	60(45)	105(75)	105(75)	105(75)	105(75)	45(30)	45(30)
ø63	25(25)	25(25)	25(25)	40(40)	25(25)	25(25)	60(45)	60(45)	110(80)	110(80)	110(85)	110(85)	50(35)	50(35)
ø80	25(25)	25(25)	30(30)	45(45)	25(25)	25(25)	60(45)	60(45)	115(85)	115(85)	115(90)	115(90)	55(40)	55(40)
ø100	25(25)	25(25)	30(30)	45(45)	25(25)	25(25)	60(45)	60(45)	125(95)	125(95)	125(100)	125(100)	60(45)	60(45)

*1: The values in ( ) are of T*V (L-shaped lead wire).
*2: When the stroke is 15 mm or less, the two switches could turn ON at the same time. In this case, adjust switch mounting positions to be as far apart as possible.

● T1/T2Y/T3Y/T2YD min. stroke with switches

	Different surface mounting				Same surface mounting				Center trunnion mounting				Rod side trunnion mounting No position detection at rod side stroke end.	Head side trunnion mounting No position detection at head side stroke end.
Switch quantity	1	2	3	4	1	2	3	4	1	2	3	4	1	1
ø40	20(10)	20(15)	25(25)	40(40)	20(10)	60(45)	105(75)	150(105)	105(75)	105(75)	165(135)	165(135)	50(35)	50(35)
ø50	15(10)	15(15)	25(25)	40(40)	15(10)	15(15)	60(45)	60(45)	100(70)	100(70)	100(75)	100(75)	45(30)	45(30)
ø63	15(10)	15(15)	25(25)	40(40)	15(10)	15(15)	60(45)	60(45)	105(75)	105(75)	105(85)	105(85)	50(35)	50(35)
ø80	15(10)	15(15)	30(30)	45(45)	15(10)	15(15)	60(45)	60(45)	110(80)	110(80)	110(90)	110(90)	55(40)	55(40)
ø100	10(10)	15(15)	30(30)	45(45)	10(10)	15(15)	60(45)	60(45)	120(90)	120(90)	120(100)	120(100)	60(45)	60(45)

*1: The values in ( ) are of T*V (L-shaped lead wire). T2YD does not have an L-shaped lead wire (V).
*2: When the stroke is 15 mm or less, the two switches could turn ON at the same time. In this case, adjust switch mounting positions to be as far apart as possible.

● T2W/T3W min. stroke with switches

	Different surface mounting				Same surface mounting				Center trunnion mounting				Rod side trunnion mounting No position detection at rod side stroke end.	Head side trunnion mounting No position detection at head side stroke end.
Switch quantity	1	2	3	4	1	2	3	4	1	2	3	4	1	1
ø40	25(25)	25(25)	25(25)	25(25)	25(25)	65(50)	110(80)	155(110)	110(80)	110(80)	170(140)	170(140)	50(35)	50(35)
ø50	25(25)	25(25)	25(25)	25(25)	25(25)	25(25)	65(40)	65(40)	110(80)	110(80)	110(80)	110(80)	50(35)	50(35)
ø63	25(25)	25(25)	25(25)	25(25)	25(25)	25(25)	65(40)	65(40)	115(85)	115(85)	115(85)	115(85)	55(40)	55(40)
ø80	25(25)	25(25)	25(25)	25(25)	25(25)	25(25)	60(40)	60(40)	120(90)	120(90)	120(90)	120(90)	55(40)	55(40)
ø100	25(25)	25(25)	25(25)	25(25)	25(25)	25(25)	60(40)	60(40)	130(100)	130(100)	130(100)	130(100)	60(45)	60(45)

*1: The values in ( ) are of T*V (L-shaped lead wire).
*2: When the stroke is 15 mm or less, the two switches could turn ON at the same time. In this case, adjust switch mounting positions to be as far apart as possible.

SCP*3
CMK2
CMA2
SCM
SCG
SCA2
SCS2
CKV2
CAV2/ COVP/N2
SSD2
SSG
SSD
CAT
MDC2
MVC
SMG
MSD/ MSDG
FC*
STK
SRL3
SRG3
SRM3
SRT3
MRL2
MRG2
SM-25
ShkAbs
FJ
FK
Spd Contr
Ending

Switch specifications (T-switch)

● 1-color/2-color LED/for AC magnetic field proof

Item	2-wire proximity	2-wire proximity			3-wire proximity				2-wire reed							2-wire proximity
	T1H/ T1V	T2H/T2V/ T2JH/T2JV	T2YH/ T2YV	T2WH/ T2WV	T3H/ T3V	T3PH/ T3PV	T3YH/ T3YV	T3WH/ T3WV	T0H/T0V		T5H/T5V		T8H/T8V			T2YD (*4) T2YDT
Applications	Programming controller relay, compact solenoid valve	Dedicated for programmable controller			For programmable controller, relay				For programmable controller, relay		For programmable controller, relay (no lamp), serial		For programmable controller, relay			Dedicated for programmable controller
Output method	-				NPN output	PNP output	NPN output	NPN output	-							
Pwr. supp. V.	-				10 to 28 VDC				-							
Load voltage	85 to 265 VAC	10 to 30 VDC		24 VDC ±10%	30 VDC or less				12/24 VDC	110 VAC	5/12/24 VDC	110 VAC	12/24 VDC	110 VAC	220 VAC	24 VDC ±10%
Load current	5 to 100 mA	5 to 20 mA (*3)			100 mA or less		50 mA or less		5 to 50 mA	7 to 20 mA	50 mA or less	20 mA or less	5 to 50 mA	7 to 20 mA	7 to 10 mA	5 to 20 mA
Indicator	LED (Lit when ON)	LED (Lit when ON)	Red/green LED (Lit when ON)	Red/green LED (Lit when ON)	LED (Lit when ON)	Yellow LED (Lit when ON)	Red/green LED (Lit when ON)	Red/green LED (Lit when ON)	LED (Lit when ON)		No indicator lamp		LED (Lit when ON)			Red/green LED (Lit when ON)
Leakage current	≤ 1 mA at 100 VAC, ≤ 2 mA at 200 VAC	1 mA or less			10 μA or less				0 mA							1 mA or less
Weight g	1 m:33 3 m:87 5 m:142	1 m:18 3 m:49 5 m:80	1 m:33 3 m:87 5 m:142	1 m:18 3 m:49 5 m:80	1 m:18 3 m:49 5 m:80		1 m:33 3 m:87 5 m:142	1 m:18 3 m:49 5 m:80	1 m:18 3 m:49 5 m:80				1 m:33 3 m:87 5 m:142			1 m:61 3 m:166 5 m:272

*1 : Refer to Ending Page 1 for detailed switch specifications and dimensions.
*2 : Switches other than the above models, such as switches with connectors, are also available. Refer to Ending Page 1.
*3 : Max. load current: 20 mA at 25°C. The current is lower than 20 mA if the operating ambient temperature around the switch is higher than 25˚C. (5 to 10 mA at 60°C)
*4 : Switch for AC magnetic field (T2YD/T2YDT) cannot be used in DC magnetic field.

Cylinder weight

(Unit: kg)

Bore size (mm)	Product weight when stroke (S) = 0 mm						Switch weight	Mounting bracket weight	Additional weight per S = 100 mm
	Basic (00)	Foot (LB)	Flange (FA, FB)	Eye bracket (CA)	Clevis bracket (CB)	Trunnion (TA, TB, TC)		T type	
ø40	0.96	1.13	1.37	1.28	1.32	1.34	Refer to the weight in the switch specifications.	0.024	0.55
ø50	1.45	1.70	1.94	1.83	1.86	1.99		0.022	0.71
ø63	1.88	2.25	2.97	2.45	2.50	2.73		0.020	0.75
ø80	3.15	3.89	5.01	4.42	4.63	4.49		0.026	1.26
ø100	4.80	5.71	7.54	6.44	6.62	7.37		0.024	1.37

(Example) Product weight of SCA2-R-LB-50B-200-25-TOH-D

- Product weight for 0 mm stroke ····· 1.70 kg
- Additional weight for 200 mm stroke ····· $0.71 \times \frac{200}{100} = 1.42$ kg
- Weight of 2 TOH switches ····· 0.018 x 2 = 0.036 kg
- Weight of 2 mounting brackets ····· 0.022 x 2 = 0.044 kg
- Product weight ····· 1.70 + 1.42 + 0.036 + 0.044 = 3.200 kg

Theoretical thrust table

(Unit: N)

Bore size (mm)	Operating direction	Working pressure MPa											
		0.05	0.1	0.15	0.2	0.3	0.4	0.5	0.6	0.7	0.8	0.9	1.0
ø40	Push	62.8	1.26×10^2	1.88×10^2	2.51×10^2	3.77×10^2	5.03×10^2	6.28×10^2	7.54×10^2	8.80×10^2	1.01×10^3	1.13×10^3	1.26×10^3
	Pull	52.8	1.06×10^2	1.58×10^2	2.11×10^2	3.17×10^2	4.22×10^2	5.28×10^2	6.33×10^2	7.39×10^2	8.44×10^2	9.50×10^2	1.06×10^3
ø50	Push	98.2	1.96×10^2	2.95×10^2	3.93×10^2	5.89×10^2	7.85×10^2	9.82×10^2	1.18×10^3	1.37×10^3	1.57×10^3	1.77×10^3	1.96×10^3
	Pull	82.5	1.65×10^2	2.47×10^2	3.30×10^2	4.95×10^2	6.60×10^2	8.25×10^2	9.90×10^2	1.15×10^3	1.32×10^3	1.48×10^3	1.65×10^3
ø63	Push	1.56×10^2	3.12×10^2	4.68×10^2	6.23×10^2	9.35×10^2	1.25×10^3	1.56×10^3	1.87×10^3	2.18×10^3	2.49×10^3	2.81×10^3	3.12×10^3
	Pull	1.40×10^2	2.80×10^2	4.20×10^2	5.61×10^2	8.41×10^2	1.12×10^3	1.40×10^3	1.68×10^3	1.96×10^3	2.24×10^3	2.52×10^3	2.80×10^3
ø80	Push	2.51×10^2	5.03×10^2	7.54×10^2	1.01×10^3	1.51×10^3	2.01×10^3	2.51×10^3	3.02×10^3	3.52×10^3	4.02×10^3	4.52×10^3	5.03×10^3
	Pull	2.27×10^2	4.54×10^2	6.80×10^2	9.07×10^2	1.36×10^3	1.81×10^3	2.27×10^3	2.72×10^3	3.17×10^3	3.63×10^3	4.08×10^3	4.54×10^3
ø100	Push	3.93×10^2	7.85×10^2	1.18×10^3	1.57×10^3	2.36×10^3	3.14×10^3	3.93×10^3	4.71×10^3	5.50×10^3	6.28×10^3	7.07×10^3	7.85×10^3
	Pull	3.57×10^2	7.15×10^2	1.07×10^3	1.43×10^3	2.14×10^3	2.86×10^3	3.57×10^3	4.29×10^3	5.00×10^3	5.72×10^3	6.43×10^3	7.15×10^3

SCP*3
CMK2
CMA2
SCM
SCG
SCA2
SCS2
CKV2
CAV2/COVP/N2
SSD2
SSG
SSD
CAT
MDC2
MVC
SMG
MSD/MSDG
FC*
STK
SRL3
SRG3
SRM3
SRT3
MRL2
MRG2
SM-25
ShkAbs
FJ
FK
Spd Contr
Ending

How to order

No switch (built-in magnet for switch)

SCA2-R - LB - 40 ( ) B - 100 - 25 ——— S I

With switch (built-in magnet for switch)

SCA2-R - LB - 40 ( ) B - 100 - 25 - T0H - R - S I

Ⓐ Mounting *1

Ⓑ Bore size

Ⓒ Port thread

Ⓓ Cushion

Ⓔ Stroke *2

Ⓕ Adjustable stroke range

Ⓖ Switch model No. *4

Ⓗ Switch quantity *5

Ⓘ Option *6 *7

Ⓙ Accessory *8

Code	Description
Ⓐ Mounting	
00	Basic
LB	Axial foot
FA	Rod side flange
TC	Intermediate trunnion
TA	Rod side trunnion
TB	Head side trunnion
TF	Intermediate supporting hole trunnion (ø40 is not available)
TD	Rod side hole trunnion (ø40 is not available)
TE	Head side hole trunnion (ø40 is not available)

Ⓑ Bore size (mm)	
40	ø40
50	ø50
63	ø63
80	ø80
100	ø100

Ⓒ Port thread	
Blank	Rc thread
N	NPT thread (made-to-order product)
G	G thread (made-to-order product)

Ⓓ Cushion	
B	Both sides cushioned
R	Rod side cushioned
H	Head side cushioned
N	Without cushion

Ⓔ Stroke (mm)

Bore size	Stroke *3	Custom stroke
ø40	**25 to 600**	**In 1 mm increments**
ø50	**25 to 600**	
ø63	**25 to 600**	
ø80	**25 to 700**	
ø100	**25 to 800**	

Ⓕ Adjustable stroke range (mm)

25, 50, 75, 100

Ⓖ Switch model No.

Refer to the switch model numbers on the next page.

*** Lead wire length**

Blank	1 m (standard)
3	3 m (option)
5	5 m (option)

Ⓗ Switch quantity	
R	1 on rod side
H	1 on head side
D	2
T	3

Ⓘ Option

		Max. ambient temp.	Instantaneous max. temp.
J	Bellows	100°C	200°C
L	Bellows	250°C	400°C
M	Piston rod material (stainless steel)		
Blank	Cushion needle position R (standard)		
S	Cushion needle position S		
T	Cushion needle position T		
P6	Copper and PTFE free (made-to-order product)		

Ⓙ Accessory	
I	Rod eye
Y	Rod clevis (pin and snap ring included)
B4	Trunnion No. 2 bracket (2 pcs./set)

⚠ Precautions for model No. selection

*1 : Mounting bracket will be shipped with the product. (The axial foot and trunnion are assembled at shipment.)
*2 : If the stroke exceeds the max. stroke, refer to Ending Page 74.
*3 : Refer to pages 480 and 481 for the min. stroke with switch.
*4 : Switches are shipped with the product.
*5 : When selecting TA, TD, TB or TE mounting, the switch quantity is limited to "H" (1 on head side) for TA and TD, and "R" (1 on rod side) for TB and TE.
*6 : The instantaneous max. temperature is the temperature when sparks, cutting chips, etc., instantaneously contact the bellows.
*7 : When selecting TA, TD, TB or TE mounting format, the cushion needle position is blank and fixed at S, with no options available.
*8 : "I" and "Y" cannot be selected together.
*9 : Refer to Ending Page 85 for custom specifications of rod end form.
*10 : Refer to page 448 for combinations of variations/options.

[Example of model No.]

SCA2-R-LB-40B-100-25-T0H-R-SI

Model: Medium bore size cylinder, double acting/stroke adjustable (pull)

Ⓐ Mounting	: Axial foot
Ⓑ Bore size	: ø40 mm
Ⓒ Port thread	: Rc thread
Ⓓ Cushion	: Both sides cushioned
Ⓔ Stroke	:100 mm
Ⓕ Adjustable stroke range	: 25 mm
Ⓖ Switch model No.	: Reed T0H switch, lead wire length 1 m
Ⓗ Switch quantity	: 1 on rod side
Ⓘ Option	: Cushion needle position S
Ⓙ Accessory	: Rod eye

[F] Switch model No.

T-switch model No.						
Axial lead wire	Radial lead wire	Contact	Voltage AC	Voltage DC	Indicator	Lead wire
T0H*	T0V*	Reed	●	●	1-color LED	2-wire
T5H*	T5V*	Reed	●	●	No indicator lamp	2-wire
T8H*	T8V*	Reed	●	●	1-color LED	2-wire
T1H*	T1V*	Proximity	●		1-color LED	2-wire
T2H*	T2V*	Proximity		●	1-color LED	2-wire
T3H*	T3V*	Proximity		●	1-color LED	3-wire
T2WH*	T2WV*	Proximity		●	2-color LED	2-wire
T2YH*	T2YV*	Proximity		●	2-color LED	2-wire
T3WH*	T3WV*	Proximity		●	2-color LED	3-wire
T3YH*	T3YV*	Proximity		●	2-color LED	3-wire
T3PH*	T3PV*	Proximity		●	1-color LED	3-wire
T2YD*	-	Proximity		●	2-color LED AC magnetic field	2-wire
T2YDT*	-	Proximity		●	2-color LED AC magnetic field	2-wire
T2JH*	T2JV*	Proximity		●	1-color LED off-delay	2-wire

How to order switch

[T-switch]

● Switch body + mounting bracket set

SCA2 - T0H - 40

- T0H: Switch model No. (Item Ⓕ)
- 40: Bore size (Item Ⓑ on page 484)

● Switch body only

SW - T0H

- T0H: Switch model No. (Item Ⓕ)

* Contact CKD when using an environment-friendly T-switch.

● Switch mounting bracket set

SCA2 - TS - 40

- TS: Mounting bracket
- 40: Bore size (Item Ⓑ on page 484)

[T2YD switch]

● Switch body + mounting bracket set

SCA2 - T2YD - 40

- T2YD: Switch model No. (Item Ⓖ on page 484)
- 40: Bore size (Item Ⓑ on page 484)

● Switch body only

SW - T2YD

- T2YD: Switch model No. (Item Ⓖ on page 484)

● Mounting bracket set

SCA2 - T - 40

- 40: Bore size (Item Ⓑ on page 484)

How to order mounting bracket

Bore size (mm) / Mounting bracket	ø40	ø50	ø63	ø80	ø100
Flange (FA)	S1-FA-40	S1-FA-50	S1-FA-63	S1-FA-80	S1-FA-100

*1 : For material of the mounting bracket, refer to page 456.
*2 : Mounting brackets are supplied with mounting bolts.

SCP*3
CMK2
CMA2
SCM
SCG
SCA2
SCS2
CKV2
CAV2/COVP/N2
SSD2
SSG
SSD
CAT
MDC2
MVC
SMG
MSD/MSDG
FC*
STK
SRL3
SRG3
SRM3
SRT3
MRL2
MRG2
SM-25
ShkAbs
FJ
FK
Spd Contr
Ending

Internal structure and parts list

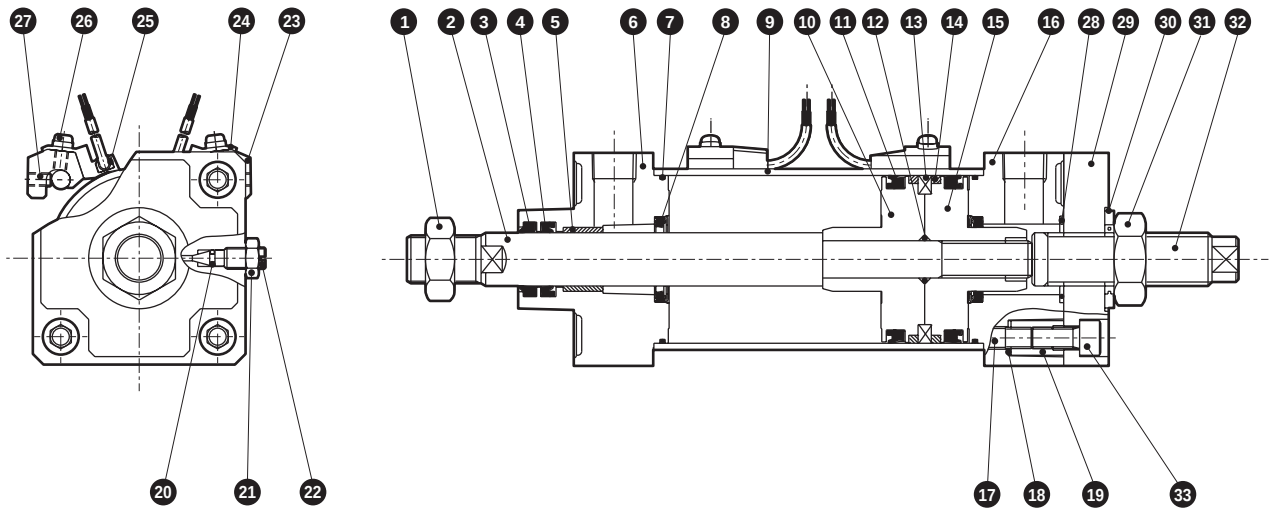

No.	Part name	Material	Remarks	No.	Part name	Material	Remarks
1	Rod nut	Steel	Zinc chromate	18	Conical spring washer	Steel	Black finish
2	Piston rod	Steel	Industrial chrome plating	19	Round nut	Steel	Zinc chromate
3	Dust wiper	Nitrile rubber		20	Needle gasket	Nitrile rubber	
4	Rod packing	Nitrile rubber		21	Needle nut	Copper alloy	Nickel plating
5	Bush	Oil impregnated bearing alloy		22	Cushion needle	Copper alloy	Nickel plating
6	Rod cover	Aluminum alloy die-casting	Paint	23	Switch mounting base	Aluminum alloy	
7	Cylinder gasket	Nitrile rubber		24	Switch holder	Aluminum alloy	
8	Cushion packing	Nitrile rubber/steel		25	Cylinder switch		
9	Cylinder tube	Aluminum alloy	Hard alumite treatment	26	Phillips pan head machine screw/captive washer	Steel	Zinc chromate
10	Piston R	Aluminum alloy die-casting		27	Hexagon socket set screw	Alloy steel	Black finish
11	Piston packing	Nitrile rubber		28	Head cover gasket	Nitrile rubber	
12	Piston gasket	Nitrile rubber		29	Head plate	Steel	Manganese phosphate treatment
13	Magnet	Plastic		30	Seal washer	Nitrile rubber/steel	Zinc chromate
14	Wear ring	Polyacetal resin		31	Nut	Steel	Zinc chromate
15	Piston H	Aluminum alloy die-casting		32	Stud bolt	Steel	Zinc chromate
16	Head cover	Aluminum alloy die-casting	Paint	33	Hexagon socket head cap screw	Alloy steel	Black finish
17	Tie rod	Steel	Zinc chromate				

Repair parts list

Bore size (mm)	Kit No.	Repair parts No.
ø40	SCA2-R-40K	3 4 7 8 11 14 20 28 30
ø50	SCA2-R-50K	
ø63	SCA2-R-63K	
ø80	SCA2-R-80K	
ø100	SCA2-R-100K	

*1: Specify the kit No. when placing an order.

Dimensions

● Basic (00)

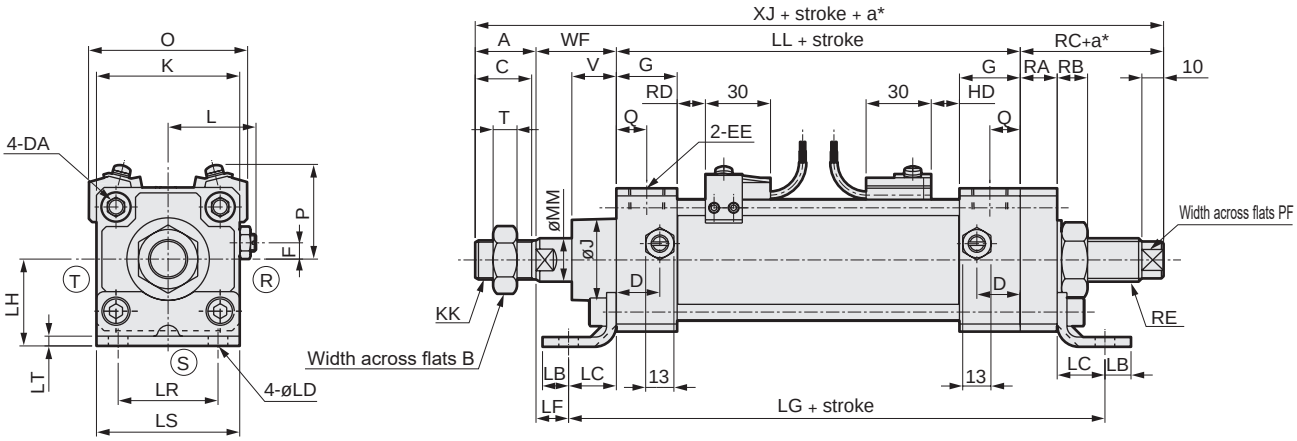

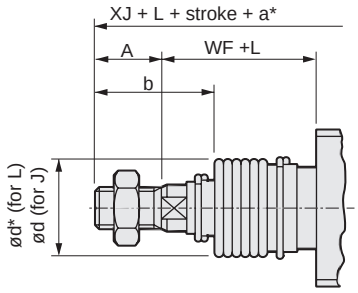

[With bellows]

* a: Adjustable stroke.

Code / Bore size (mm)	A	B	C	D	DA	EE	F	G	J	K	KK	L	LL	MM	Q	RA	RB	RC	RE	PF
ø40	22	22	20	18	M8	Rc1/4	7.5	26	31	57	M14x1.5	38 to 39.5	93	16	13	14	11	35	M16x1.5	11
ø50	28	27	26	20	M8	Rc3/8	0	28	38	66	M18x1.5	41 to 43.5	101	20	14	17	14	41	M20x1.5	14
ø63	28	27	26	22	M8	Rc3/8	0	30	38	80	M18x1.5	47.5 to 50	105	20	15	17	14	41	M20x1.5	14
ø80	36	32	34	26	M12	Rc1/2	0	34	43	98	M22x1.5	56 to 59	116	25	17	20	16	46	M24x1.5	17
ø100	45	41	43	28	M12	Rc1/2	0	36	51	118	M26x1.5	66 to 69	128	30	18	20	16	46	M24x1.5	17

Code / Bore size (mm)						With switch										Mounting dimensions								
	T	V	WF	XF	XJ	O	P	T0, T5 T2, T3		T1, T2Y T3Y, T2J		T8		T2W, T3W		LB	LC	LD	LF	LG	LH	LR	LS	LT
								RD	HD	RD	HD	RD	HD	RD	HD									
ø40	8	18.5	33.5	55.5	183.5	66	41.5	11	11	10	10	5	5	13	13	10	19.5	9	14	146	40	40	57	3.2
ø50	11	20.5	37	65	207	73	43	13	13	12	12	7	7	15	15	12	22	9	15	162	40	46	66	4.5
ø63	11	21	35	63	209	85	47	13	13	12	12	7	7	15	15	12	30	11	5	182	50	60	80	4.5
ø80	13	23.5	48	84	246	105	57	14.5	14.5	13.5	13.5	8.5	8.5	16.5	16.5	14	37	14	11	210	60	74	98	6.0
ø100	16	32	53	98	272	121	63	18.5	18.5	17.5	17.5	12.5	12.5	20.5	20.5	21	31	14	12	210	67	80	118	6.0

Code / Bore size (mm)	With bellows										
				L							
	b	d	d*	≤ 50	51 ≤ 100	101 ≤ 150	151 ≤ 200	201 ≤ 300	301 ≤ 400	401 ≤ 500	*1 Over 500
ø40	41	40	40	25.5	41.5	58.5	75.5	108.5	141.5	174.5	(Stroke/3.0) + 8
ø50	47	47	48	22	36	49	63	90	119	146	(Stroke/3.6) + 7.5
ø63	45	47	48	22	36	49	63	90	119	146	(Stroke/3.6) + 7.5
ø80	58.5	53	55	14	26	38	49	72	96	119	(Stroke/4.3) + 2.5
ø100	69.5	61	65	20	32	42	53	76	98	120	(Stroke/4.5) + 9

*1 : For the L dimension, round up below the decimal point.
*2 : Ⓡ, Ⓢ and Ⓣ indicate the cushion needle position.
*3 : In the foot mounting, the pitch in the axial direction differs from that of the standard.
*4 : Refer to page 615 for dimensions of projecting section of T2YD switch.

* Installation dimensions of other mounting are the same as those of the SCA2 (standard). Refer to pages 458 to 469.
* For the dimensions of the accessories, refer to pages 470 and 471.

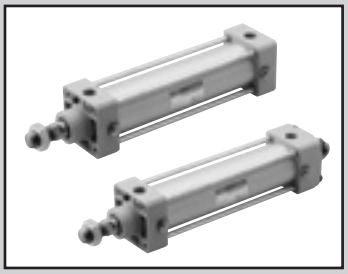

Medium bore size cylinder
Double acting/heat resistant

SCA2-T Series

● Bore size: ø40/ø50/ø63/ø80/ø100

JIS symbol

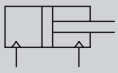

RoHS CAD

Specifications

Item		SCA2-T/SCA2-L2T (heat resistance)				
Bore size mm		ø40	ø50	ø63	ø80	ø100
Actuation		Double acting				
Working fluid		Compressed air				
Max. working pressure MPa		1.0 (≈150 psi, 10 bar)				
Min. working pressure MPa		0.05 (≈7.3 psi, 0.5 bar)				
Proof pressure MPa		1.6 (≈230 psi, 16 bar)				
Ambient temperature °C		5 (41°F) to 120 (248°F)				
Port size		Rc1/4	Rc3/8		Rc1/2	
Stroke tolerance mm		$^{+0.9}_{0}$(to 360) $^{+1.4}_{0}$(to 800)				
Working piston speed mm/s		50 to 1000 (Operate within the absorbed energy.)				
Cushion		Air cushion				
Effective air cushion length mm		14.6	16.6	16.6	20.6	23.6
Lubrication		Unavailable *1				
Allowable absorbed energy J	Cushioned	4.29	8.37	15.8	27.9	49.8
	Without cushion	0.067	0.079	0.079	0.201	0.301
		Without any cushion, this product cannot absorb large energy generated by an external load. We recommend using an external shock absorber.				

*1: Periodically apply additional heat-resistant grease.

Stroke

Bore size (mm)	Body without switch/ standard stroke (mm)	Body with switch/standard stroke (mm)	Max. stroke (mm)	Min. stroke (mm)
ø40	25/50/75/100/150/200/250/300/350/400/450/500	150/200/250/300/350/400/450/500	600	1 *2
ø50				
ø63				
ø80			700	
ø100			800	

*1: The custom stroke is available in 1 mm increments.
*2: When using the type with switch, refer to the table of the min. stroke with switch as below.

Min. stroke with switch

(Unit: mm)

Sketch	When mounted on different surfaces			When mounted on the same surface			With intermediate support (hole) trunnion			With rod side supporting hole	With head side supporting hole
	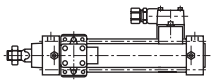			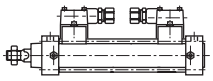			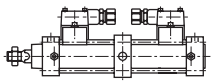			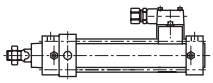 Position cannot be detected at the rod side stroke end.	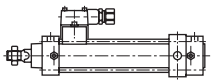 Position cannot be detected at the head side stroke end.
Switch quantity / Bore size (mm)	1	2	3	1	2	3	1	2	3	1	1
ø40	150	150	335	335	335	390	335	335	390	150	150
ø50	145	145	335	335	335	390	335	335	390	145	145
ø63	145	145	335	335	335	390	335	335	390	145	145
ø80	145	145	335	335	335	390	335	335	390	145	145
ø100	140	140	335	335	335	390	335	335	390	140	140

Switch specifications

Item	2-wire reed		
	E0		
Applications	For relay, programmable controller		
Load voltage	12 VDC/24 VDC	110 VAC	220 VAC
Load current	5 to 50 mA	7 to 20 mA	7 to 10 mA
Indicator	LED lit when ON		
Leakage current	0 mA		
Weight g	164		

*1: Refer to Ending Page 1 for other switch specifications.

Cylinder weight

(Unit: kg)

Bore size (mm)	Product weight when stroke (S) = 0 mm							Switch weight	Mounting bracket weight	Additional weight per S = 100 mm
	Basic (OO)	Foot (LB)	Flange (FA, FB)	Special flange (FC)	Eye bracket (CA)	Clevis bracket (CB)	Trunnion (TA, TB, TC)		EO type	
ø40	0.83	1.00	1.24	0.92	1.15	1.19	1.21	Refer to the weight in the switch specifications.	0.043	0.39
ø50	1.20	1.45	1.69	1.31	1.58	1.61	1.74		0.059	0.46
ø63	1.60	1.97	2.69	1.78	2.17	2.22	2.45		0.070	0.50
ø80	2.60	3.34	4.46	2.96	3.87	4.08	3.94		0.105	0.90
ø100	4.20	5.11	6.94	4.75	5.84	6.02	6.77		0.132	1.12

(Example) Product weight of SCA2-L2T-LB-50B-200-EO-D

- Product weight for 0 mm stroke ····· 1.45 kg
- Additional weight for 200 mm stroke ····· 0.46 x $\frac{200}{100}$ = 0.92 kg
- Weight of 2 EO switches ····· 0.164 x 2 = 0.328 kg
- Weight of 2 mounting brackets ····· 0.059 x 2 = 0.118 kg
- Product weight ····· 1.45 + 0.92 + 0.328 + 0.118 = 2.816 kg

Theoretical thrust table

(Unit: N)

Bore size (mm)	Operating direction	Working pressure MPa											
		0.05	0.1	0.15	0.2	0.3	0.4	0.5	0.6	0.7	0.8	0.9	1.0
ø40	Push	62.8	$1.26x10^2$	$1.88x10^2$	$2.51x10^2$	$3.77x10^2$	$5.03x10^2$	$6.28x10^2$	$7.54x10^2$	$8.80x10^2$	$1.01x10^3$	$1.13x10^3$	$1.26x10^3$
	Pull	52.8	$1.06x10^2$	$1.58x10^2$	$2.11x10^2$	$3.17x10^2$	$4.22x10^2$	$5.28x10^2$	$6.33x10^2$	$7.39x10^2$	$8.44x10^2$	$9.50x10^2$	$1.06x10^3$
ø50	Push	98.2	$1.96x10^2$	$2.95x10^2$	$3.93x10^2$	$5.89x10^2$	$7.85x10^2$	$9.82x10^2$	$1.18x10^3$	$1.37x10^3$	$1.57x10^3$	$1.77x10^3$	$1.96x10^3$
	Pull	82.5	$1.65x10^2$	$2.47x10^2$	$3.30x10^2$	$4.95x10^2$	$6.60x10^2$	$8.25x10^2$	$9.90x10^2$	$1.15x10^3$	$1.32x10^3$	$1.48x10^3$	$1.65x10^3$
ø63	Push	$1.56x10^2$	$3.12x10^2$	$4.68x10^2$	$6.23x10^2$	$9.35x10^2$	$1.25x10^3$	$1.56x10^3$	$1.87x10^3$	$2.18x10^3$	$2.49x10^3$	$2.81x10^3$	$3.12x10^3$
	Pull	$1.40x10^2$	$2.80x10^2$	$4.20x10^2$	$5.61x10^2$	$8.41x10^2$	$1.12x10^3$	$1.40x10^3$	$1.68x10^3$	$1.96x10^3$	$2.24x10^3$	$2.52x10^3$	$2.80x10^3$
ø80	Push	$2.51x10^2$	$5.03x10^2$	$7.54x10^2$	$1.01x10^3$	$1.51x10^3$	$2.01x10^3$	$2.51x10^3$	$3.02x10^3$	$3.52x10^3$	$4.02x10^3$	$4.52x10^3$	$5.03x10^3$
	Pull	$2.27x10^2$	$4.54x10^2$	$6.80x10^2$	$9.07x10^2$	$1.36x10^3$	$1.81x10^3$	$2.27x10^3$	$2.72x10^3$	$3.17x10^3$	$3.63x10^3$	$4.08x10^3$	$4.54x10^3$
ø100	Push	$3.93x10^2$	$7.85x10^2$	$1.18x10^3$	$1.57x10^3$	$2.36x10^3$	$3.14x10^3$	$3.93x10^3$	$4.71x10^3$	$5.50x10^3$	$6.28x10^3$	$7.07x10^3$	$7.85x10^3$
	Pull	$3.57x10^2$	$7.15x10^2$	$1.07x10^3$	$1.43x10^3$	$2.14x10^3$	$2.86x10^3$	$3.57x10^3$	$4.29x10^3$	$5.00x10^3$	$5.72x10^3$	$6.43x10^3$	$7.15x10^3$

SCP*3
CMK2
CMA2
SCM
SCG
SCA2
SCS2
CKV2
CAV2/ COVP/N2
SSD2
SSG
SSD
CAT
MDC2
MVC
SMG
MSD/ MSDG
FC*
STK
SRL3
SRG3
SRM3
SRT3
MRL2
MRG2
SM-25
ShkAbs
FJ
FK
Spd Contr
Ending

How to order

No switch (without magnet for switch)

SCA2- T - LB - 40 ( ) B - 100 ——— S I

With switch (built-in magnet for switch)

SCA2-L2T - LB - 40 ( ) B - 150 - E0 - R - S I

- Heat resistance/ with switch
- Ⓐ Mounting *1
- Ⓑ Bore size
- Ⓒ Port thread
- Ⓓ Cushion
- Ⓔ Stroke *2
- Ⓕ Switch model No. *5
- Ⓖ Switch quantity
- Ⓗ Option *6 *7
- Ⓘ Accessory *8

Code	Description
Ⓐ Mounting	
00	Basic
LB	Axial foot
FA	Rod side flange
FB	Head side flange
FC	Head side special flange
CA	Eye bracket
CB	Clevis bracket (pin and snap ring included)
TC	Intermediate trunnion
TA	Rod side trunnion
TB	Head side trunnion
TF	Intermediate supporting hole trunnion (ø40 is not available)
TD	Rod side hole trunnion (ø40 is not available)
TE	Head side hole trunnion (ø40 is not available)

Ⓑ Bore size (mm)	
40	ø40
50	ø50
63	ø63
80	ø80
100	ø100

Ⓒ Port thread	
Blank	Rc thread
N	NPT thread (made-to-order product)
G	G thread (made-to-order product)

Ⓓ Cushion	
B	Both sides cushioned
R	Rod side cushioned
H	Head side cushioned
N	Without cushion

Ⓔ Stroke (mm)

Bore size	Stroke *3	Custom stroke
ø40	1 to 600	In 1 mm increments
ø50	1 to 600	
ø63	1 to 600	
ø80	1 to 700	
ø100	1 to 800	

Ⓕ Switch model No.			
E0	Reed	1-color LED	2-wire

Ⓖ Switch quantity	
R	1 on rod side
H	1 on head side
D	2
T	3

Ⓗ Option			
		Max. ambient temp.	Instantaneous max. temp.
L	Bellows	250°C	400°C
M	Piston rod material (stainless steel)		
Blank	Cushion needle position R (standard)		
S	Cushion needle position S		
T	Cushion needle position T		

Ⓘ Accessory	
I	Rod eye
Y	Rod clevis (pin and snap ring included)
B1	Eye bracket
B2	Clevis bracket (pin and snap ring included)
B3	Eye bracket
B4	Trunnion No. 2 bracket (2 pcs./set)

⚠ Precautions for model No. selection

*1 : Mounting bracket will be shipped with the product. (Trunnion are assembled at shipment.)
*2 : If the type with switch is selected, 150 mm or less stroke cannot be selected.
*3 : Refer to page 488 for the min. stroke with switch.
*4 : If the stroke exceeds the max. stroke, refer to Ending Page 69.
*5 : Switches are shipped with the product.
*6 : The instantaneous max. temperature is the temperature when sparks, cutting chips, etc., instantaneously contact the bellows.
*7 : When selecting TA, TD, TB or TE mounting format, the cushion needle position is blank and fixed at S, with no options available.
*8 : "I" and "Y" cannot be selected together.
*9 : Refer to Ending Page 85 for custom specifications of rod end form.
*10: Refer to page 448 for combinations of variations/options.

[Example of model No.]

SCA2-L2T-LB-40B-150-E0-R-SI

Model: Medium bore size cylinder, double acting/heat resistant

- Ⓐ Mounting : Axial foot
- Ⓑ Bore size : ø40 mm
- Ⓒ Port thread : Rc thread
- Ⓓ Cushion : Both sides cushioned
- Ⓔ Stroke : 150 mm
- Ⓕ Switch model No. : Reed E0 switch
- Ⓖ Switch quantity : 1 on rod side
- Ⓗ Option : Cushion needle position S
- Ⓘ Accessory : Rod eye

How to order switch

● Switch body + mounting bracket set

SCA2 - E0 - 40

- 40 → Bore size (Item Ⓑ on page 490)
- E0 → Switch model No. (Item Ⓕ on page 490)

● Switch body only

SW - E0

- E0 → Switch model No. (Item Ⓕ on page 490)

● Mounting bracket set

SCA2 - E - 40

- E → Mounting bracket
- 40 → Bore size (Item Ⓑ on page 490)

How to order mounting bracket

Bore size (mm) / Mounting bracket	ø40	ø50	ø63	ø80	ø100
Foot (LB) *2	S1-LB-40	S1-LB-50	S1-LB-63	S1-LB-80	S1-LB-100
Flange (FA/FB)	S1-FA-40	S1-FA-50	S1-FA-63	S1-FA-80	S1-FA-100
Eye bracket (CA)	S1-CA-40	S1-CA-50	S1-CA-63	S1-CA-80	S1-CA-100
Clevis bracket (CB)	S1-CB-40	S1-CB-50	S1-CB-63	S1-CB-80	S1-CB-100

*1 : For material of the mounting bracket, refer to page 456.
*2 : The foot mounting bracket is provided as 2 pcs./set.
*3 : All mounting brackets are supplied with mounting bolts.

Internal structure and parts list

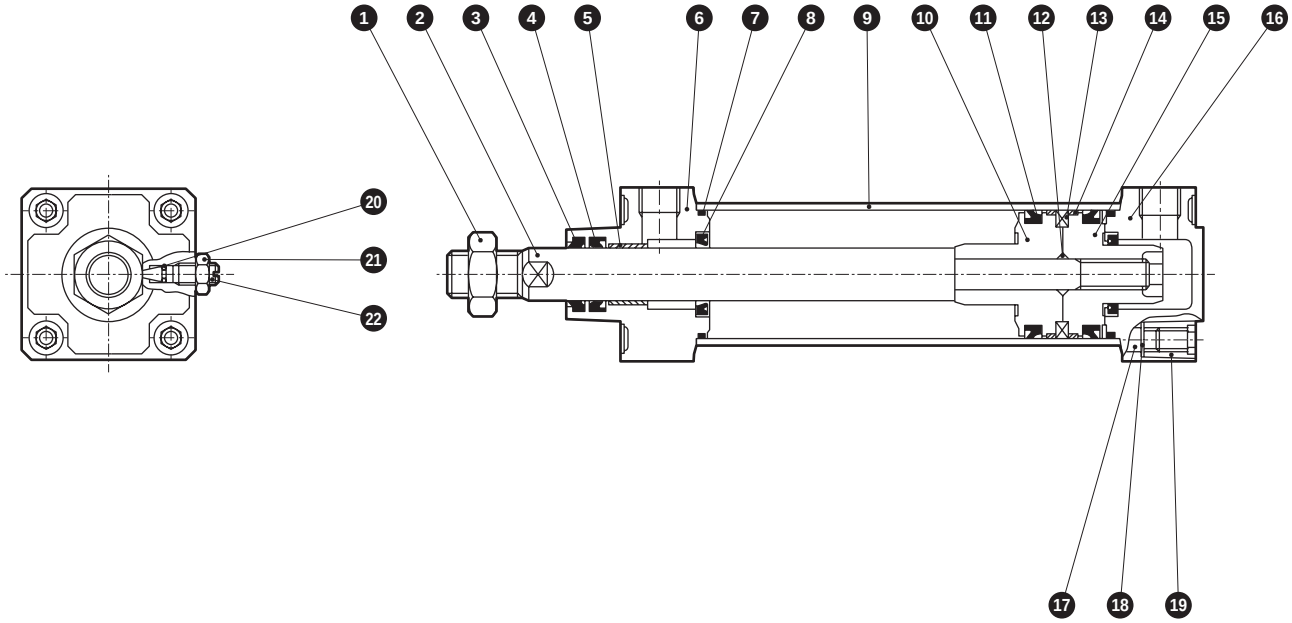

No.	Part name	Material	Remarks	No.	Part name	Material	Remarks
1	Rod nut	Steel	Zinc chromate	13	Piston ring	Steel	SCA2-T
2	Piston rod	Steel	Industrial chrome plating		Magnet	Rare earth plastic magnet	SCA2-L2T
3	Dust wiper	Fluoro rubber		14	Wear ring	Special resin	
4	Rod packing	Fluoro rubber		15	Piston H	Aluminum alloy die-casting	
5	Bush	Oil impregnated bearing alloy		16	Head cover	Aluminum alloy die-casting	Paint
6	Rod cover	Aluminum alloy die-casting	Paint	17	Tie rod	Steel	Zinc chromate
7	Cylinder gasket	Fluoro rubber		18	Conical spring washer	Steel	Black finish
8	Cushion packing	Fluoro rubber, steel		19	Round nut	Steel	Zinc chromate
9	Cylinder tube	Aluminum alloy	Hard alumite treatment	20	Needle gasket	Fluoro rubber	
10	Piston R	Aluminum alloy die-casting		21	Needle nut	Copper alloy	
11	Piston packing	Fluoro rubber		22	Cushion needle	Copper alloy	
12	Piston gasket	Fluoro rubber					

Repair parts list

Bore size (mm)	Kit No.	Repair parts No.
ø40	SCA2-T-40K	3 4 7 8 11 14 20
ø50	SCA2-T-50K	
ø63	SCA2-T-63K	
ø80	SCA2-T-80K	
ø100	SCA2-T-100K	

Note: Specify the kit No. when placing an order.

Dimensions

● Basic (00)

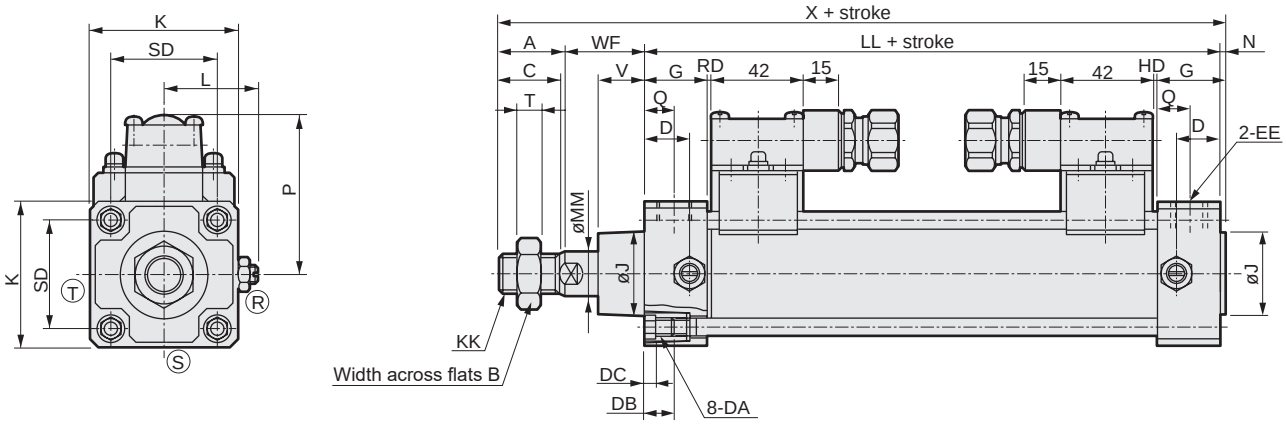

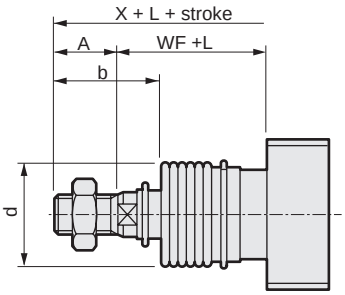

[With bellows]

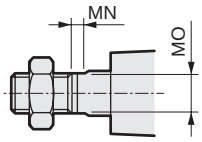

Code	Basic (00) Basic dimensions																					
Bore size (mm)	A	B	C	D	DA	DB	DC	EE	F	G	J	K	KK	L	LL	MM	MN	MO	N	Q	SD	T
ø40	22	22	20	18	M8	12	4	Rc1/4	7.5	26	31	57	M14x1.5	38 to 39.5	93	16	8	14	2	13	40.5	8
ø50	28	27	26	20	M8	12	4	Rc3/8	0	28	38	66	M18x1.5	41 to 43.5	101	20	8	17	2.5	14	48	11
ø63	28	27	26	22	M8	12	4	Rc3/8	0	30	38	80	M18x1.5	47.5 to 50.0	105	20	8	17	3	15	59	11
ø80	36	32	34	26	M12	16	5	Rc1/2	0	34	43	98	M22x1.5	56 to 59	116	25	11	22	3.5	17	74	13
ø100	45	41	43	28	M12	16	5	Rc1/2	0	36	51	118	M26x1.5	66 to 69	128	30	13	27	4	18	90	16

Code				With bellows										With switch		
						L										
Bore size (mm)	V	WF	X	b	d	50 or less	Over 50 to 100	Over 100 to 150	Over 150 to 200	Over 200 to 300	Over 300 to 400	Over 400 to 500	*1 Over 500	HD	P	RD
ø40	18.5	33.5	150.5	41	40	25.5	41.5	58.5	75.5	108.5	141.5	174.5	(Stroke/3.0) + 8	0	68	0
ø50	20.5	37	168.5	47	48	22	36	49	63	90	119	146	(Stroke/3.6) + 7.5	1.5	72	1.5
ø63	21	35	171	45	48	22	36	49	63	90	119	146	(Stroke/3.6) + 7.5	1.5	79	1.5
ø80	23.5	48	203.5	58.5	55	14	26	38	49	72	96	119	(Stroke/4.3) + 2.5	3	89	3
ø100	32	53	230	69.5	65	20	32	42	53	76	98	120	(Stroke/4.5) + 9	7	99	7

*1: For the L dimension, round up below the decimal point.

* Installation dimensions of other mountings are the same as those of the SCA2 (standard). Refer to pages 458 to 469.
* For the dimensions of the accessories, refer to pages 470 and 471.

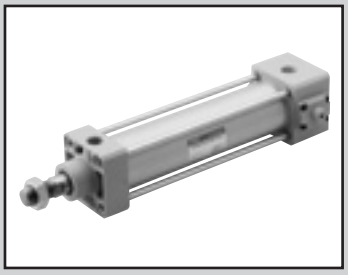

Medium bore size cylinder
Double acting/position locking

SCA2-Q2 Series

● Bore size: ø40/ø50/ø63/ø80/ø100

JIS symbol

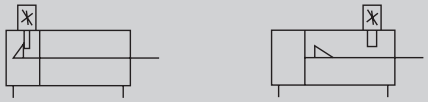

RoHS CAD

Specifications

Descriptions		SCA2-Q2(Position locking)				
Bore size mm		ø40	ø50	ø63	ø80	ø100
Actuation		Double acting				
Working fluid		Compressed air				
Max. working pressure MPa		1.0				
Min. working pressure MPa		0.1				
Proof pressure MPa		1.6				
Ambient temperature °C		-10 to 60 (no freezing)				
Port size		Rc 1/4	Rc 3/8		Rc 1/2	
Stroke tolerance mm		$^{+0.9}_{0}$ (up to 360), $^{+1.4}_{0}$ (up to 800)				
Working piston speed mm/s		50 to 500 (Use within the allowable absorbed energy...)				
Cushion		Air cushion				
Effective air cushion length mm		14.6	16.6	16.6	20.6	23.6
Position locking mechanism		Head side, rod side				
Holding force N		Max. thrust x 0.7				
Lubrication		Not required (use turbine oil class 1 ISO VG32 if necessary for lubrication)				
Allowable absorbed energy J	Cushioned	4.29	8.37	15.8	27.9	49.8
	Without cushion	0.067	0.079	0.079	0.201	0.301
		without cushion,Cannot absorb high energy generated by an external load. We recommend using an external shock absorber.				

Stroke

Bore size(mm)	Standard stroke (mm)	Max. stroke (mm)	Min.Stroke (mm)
ø40	25/50/75/100/ 150/200/250/ 300/350/400/ 450/500	600	5
ø50			
ø63			
ø80		700	
ø100		800	

*1:The custom stroke is available in 1 mm increments.

Min. stroke with switch

● Min. stroke with T0/T5 switches

	Different surface mounting				Same surface mounting				Center trunnion mounting				Rod side trunnion mounting position cannot be detected at the rod side stroke end.	Head side trunnion mounting Position cannot be detected at head Position cannot be detected.
Switch quantity	1	2	3	4	1	2	3	4	1	2	3	4	1	1
ø40	20 (10)	20 (20)	40 (40)	60 (60)	20 (10)	60 (45)	105 (75)	150 (105)	135 (135)	135 (135)	200 (170)	200 (170)	50 (50)	50 (50)
ø50	15 (10)	20 (20)	40 (40)	60 (60)	15 (10)	20 (20)	65 (50)	65 (60)	160 (160)	160 (160)	160 (160)	160 (160)	60 (60)	60 (60)
ø63	15 (10)	20 (20)	40 (40)	60 (60)	15 (10)	20 (20)	70 (55)	70 (60)	135 (120)	135 (120)	135 (125)	135 (125)	50 (45)	50 (45)
ø80	15 (15)	25 (25)	45 (45)	65 (65)	15 (15)	25 (25)	70 (55)	70 (65)	140 (110)	140 (110)	140 (130)	140 (130)	55 (40)	55 (40)
ø100	15 (15)	25 (25)	45 (45)	70 (70)	15 (15)	25 (25)	70 (55)	70 (70)	150 (120)	150 (120)	150 (145)	150 (145)	60 (45)	60 (45)

*1: Values in ( ) are for T*V (L-shaped lead wire).
*2: When the stroke is 15 mm or less, the two switches could turn ON at the same time. In this case, adjust switch mounting positions to be as far apart as possible.

● Min. stroke with T8 switch

	Different surface mounting				Same surface mounting				Center trunnion mounting				Rod side trunnion mounting No position detection at rod side stroke end.	Head side trunnion mounting No position detection at head side stroke end.
Switch quantity	1	2	3	4	1	2	3	4	1	2	3	4	1	1
ø40	15 (10)	20 (20)	40 (40)	60 (60)	15 (10)	50 (35)	95 (65)	140 (95)	125 (125)	125 (125)	190 (160)	190 (160)	45 (40)	45 (40)
ø50	10 (10)	20 (20)	40 (40)	60 (60)	10 (10)	20 (20)	70 (55)	70 (60)	150 (150)	150 (150)	175 (175)	175 (175)	50 (50)	50 (50)
ø63	10 (10)	20 (20)	40 (40)	60 (60)	10 (10)	20 (20)	70 (55)	70 (60)	120 (110)	120 (110)	140 (140)	140 (140)	45 (35)	45 (35)
ø80	15 (15)	25 (25)	45 (45)	65 (65)	15 (15)	25 (25)	70 (55)	70 (65)	130 (100)	130 (100)	145 (145)	145 (145)	50 (35)	50 (35)
ø100	15 (15)	25 (25)	45 (45)	65 (65)	15 (15)	25 (25)	70 (55)	70 (65)	140 (110)	140 (110)	155 (155)	155 (155)	55 (40)	55 (40)

*1: Values in ( ) are for T*V (L-shaped lead wire).
*2: When the stroke is 15 mm or less, the two switches could turn ON at the same time. In this case, adjust switch mounting positions to be as far apart as possible.

⚠ Be sure to read the Safety precautions for the Position locking on pages 616 to 619 before use.

Min. stroke with switch

● T2/T3 min. stroke with switches

	Different surface mounting				Same surface mounting				Center trunnion mounting				Rod side trunnion mounting No position detection at rod side stroke end.	Head side trunnion mounting No position detection at head side stroke end.
Switch quantity	1	2	3	4	1	2	3	4	1	2	3	4	1	1
ø40	20(10)	20(15)	25(25)	40(40)	20(10)	60(45)	105(75)	150(105)	130(100)	130(100)	190(160)	190(160)	50(35)	50(35)
ø50	15(10)	15(15)	25(25)	40(40)	15(10)	15(15)	60(45)	60(45)	130(100)	130(100)	130(105)	130(105)	45(30)	45(30)
ø63	15(10)	15(15)	25(25)	40(40)	15(10)	15(15)	60(45)	60(45)	135(105)	135(105)	135(110)	135(110)	50(35)	50(35)
ø80	15(10)	15(15)	30(30)	45(45)	15(10)	15(15)	60(45)	60(45)	140(110)	140(110)	140(120)	140(120)	55(40)	55(40)
ø100	10(10)	15(15)	30(30)	45(45)	10(10)	15(15)	60(45)	60(45)	150(120)	150(120)	150(130)	150(130)	60(45)	60(45)

*1: The values in ( ) are of T*V (L-shaped lead wire).
*2: When the stroke is 15 mm or less, the two switches could turn ON at the same time. In this case, adjust switch mounting positions to be as far apart as possible.

● T1/T2Y/T3Y/T2YD min. stroke with switches

	Different surface mounting				Same surface mounting				Center trunnion mounting				Rod side trunnion mounting No position detection at rod side stroke end.	Head side trunnion mounting No position detection at head side stroke end.
Switch quantity	1	2	3	4	1	2	3	4	1	2	3	4	1	1
ø40	20(10)	20(15)	25(25)	40(40)	20(10)	60(45)	105(75)	150(105)	105(75)	105(75)	165(135)	165(135)	50(35)	50(35)
ø50	15(10)	15(15)	25(25)	40(40)	15(10)	15(15)	60(45)	60(45)	100(70)	100(70)	100(75)	100(75)	45(30)	45(30)
ø63	15(10)	15(15)	25(25)	40(40)	15(10)	15(15)	60(45)	60(45)	105(75)	105(75)	105(85)	105(85)	50(35)	50(35)
ø80	15(10)	15(15)	30(30)	45(45)	15(10)	15(15)	60(45)	60(45)	110(80)	110(80)	110(90)	110(90)	55(40)	55(40)
ø100	10(10)	15(15)	30(30)	45(45)	10(10)	15(15)	60(45)	60(45)	120(90)	120(90)	120(100)	120(100)	60(45)	60(45)

*1: The values in ( ) are of T*V (L-shaped lead wire). T2YD does not have an L-shaped lead wire (V).
*2: When the stroke is 15 mm or less, the two switches could turn ON at the same time. In this case, adjust switch mounting positions to be as far apart as possible.

● T2W/T3W min. stroke with switches

	Different surface mounting				Same surface mounting				Center trunnion mounting				Rod side trunnion mounting No position detection at rod side stroke end.	Head side trunnion mounting No position detection at head side stroke end.
Switch quantity	1	2	3	4	1	2	3	4	1	2	3	4	1	1
ø40	20(5)	20(10)	20(15)	25(25)	20(5)	65(50)	110(80)	155(110)	135(105)	135(105)	195(165)	195(165)	50(35)	50(35)
ø50	20(5)	20(10)	20(15)	20(20)	20(5)	20(10)	65(40)	65(40)	135(105)	135(105)	135(105)	135(105)	50(35)	50(35)
ø63	20(5)	20(10)	20(15)	25(25)	20(5)	20(10)	65(40)	65(40)	140(110)	140(110)	140(110)	140(110)	55(40)	55(40)
ø80	15(5)	15(10)	15(15)	25(25)	15(5)	15(10)	60(40)	60(40)	145(115)	145(115)	145(115)	145(115)	55(40)	55(40)
ø100	10(5)	10(10)	20(20)	25(25)	10(5)	10(10)	60(40)	60(40)	155(125)	155(125)	155(125)	155(125)	60(45)	60(45)

*1: The values in ( ) are of T*V (L-shaped lead wire).
*2: When the stroke is 15 mm or less, the two switches could turn ON at the same time. In this case, adjust switch mounting positions to be as far apart as possible.

SCP*3
CMK2
CMA2
SCM
SCG
SCA2
SCS2
CKV2
CAV2/COVP/N2
SSD2
SSG
SSD
CAT
MDC2
MVC
SMG
MSD/MSDG
FC*
STK
SRL3
SRG3
SRM3
SRT3
MRL2
MRG2
SM-25
ShkAbs
FJ
FK
Spd Contr
Ending

Switch specifications (T-switch)

● 1-color/2-color LED/for AC magnetic field proof

Item	2-wire proximity	2-wire proximity			3-wire proximity				2-wire reed							2-wire proximity
	T1H/T1V	T2H/T2V/T2JH/T2JV	T2YH/T2YV	T2WH/T2WV	T3H/T3V	T3PH/T3PV	T3YH/T3YV	T3WH/T3WV	T0H/T0V		T5H/T5V		T8H/T8V			T2YD (*4) T2YDT
Applications	Programming controller relay, compact solenoid valve	Dedicated for programmable controller			For programmable controller, relay				For programmable controller, relay		For programmable controller, relay (no lamp), serial		For programmable controller, relay			Dedicated for programmable controller
Output method	-				NPN output	PNP output	NPN output	NPN output	-							
Pwr. supp. V.	-				10 to 28 VDC				-							
Load voltage	85 to 265 VAC	10 to 30 VDC		24 VDC ±10%	30 VDC or less				12/24 VDC	110 VAC	5/12/24 VDC	110 VAC	12/24 VDC	110 VAC	220 VAC	24 VDC ±10%
Load current	5 to 100 mA	5 to 20 mA (*3)			100 mA or less		50 mA or less		5 to 50 mA	7 to 20 mA	50 mA or less	20 mA or less	5 to 50 mA	7 to 20 mA	7 to 10 mA	5 to 20 mA
Indicator	LED (Lit when ON)	LED (Lit when ON)	Red/green LED (Lit when ON)	Red/green LED (Lit when ON)	LED (Lit when ON)	Yellow LED (Lit when ON)	Red/green LED (Lit when ON)	Red/green LED (Lit when ON)	LED (Lit when ON)		No indicator lamp		LED (Lit when ON)			Red/green LED (Lit when ON)
Leakage current	≤ 1 mA at 100 VAC, ≤ 2 mA at 200 VAC	1 mA or less			10 μA or less				0 mA							1 mA or less
Weight g	1 m:33 3 m:87 5 m:142	1 m:18 3 m:49 5 m:80	1 m:33 3 m:87 5 m:142	1 m:18 3 m:49 5 m:80	1 m:18 3 m:49 5 m:80		1 m:33 3 m:87 5 m:142	1 m:18 3 m:49 5 m:80	1 m:18 3 m:49 5 m:80				1 m:33 3 m:87 5 m:142			1 m:61 3 m:166 5 m:272

*1 : Refer to Ending Page 1 for detailed switch specifications and dimensions.
*2 : Switches other than the above models, such as switches with connectors, are also available. Refer to Ending Page 1.
*3 : Max. load current: 20 mA at 25°C. The current is lower than 20 mA if the operating ambient temperature around the switch is higher than 25˚C. (5 to 10 mA at 60°C)
*4 : Switch for AC magnetic field (T2YD/T2YDT) cannot be used in DC magnetic field.

Cylinder weight

(Unit: kg)

Bore size (mm)	Product weight when stroke (S) = 0 mm							Switch weight	Mounting bracket weight	Additional weight per S = 100 mm
	Basic (OO)	Foot (LB)	Flange (FA, FB)	Special flange (FC)	Eye bracket (CA)	Clevis bracket (CB)	Trunnion (TA, TB, TC)		T type	
ø40	1.21	1.38	1.62	1.30	1.53	1.57	1.59	Refer to the weight in the switch specifications.	0.024	0.39
ø50	1.70	1.95	2.19	1.81	2.08	2.11	2.24		0.022	0.46
ø63	2.36	2.73	3.45	2.54	2.93	2.98	3.21		0.020	0.50
ø80	3.84	4.58	5.70	4.20	5.11	5.32	5.18		0.026	0.90
ø100	6.12	7.03	8.86	6.67	7.76	7.94	8.69		0.024	1.12

(Example) Product weight of SCA2-Q2-LB-50B-200-H-T0H-D

- Product weight for 0 mm stroke ····· 1.95 kg
- Additional weight for 200 mm stroke ····· 0.46 x $\frac{200}{100}$ = 0.92 kg
- Weight of 2 T0H switches ····· 0.018 x 2 = 0.036 kg
- Weight of 2 mounting brackets ····· 0.022 x 2 = 0.044 kg
- Product weight ····· 1.95 + 0.92 + 0.036 + 0.044 = 2.950 kg

Theoretical thrust table

(Unit: N)

Bore size (mm)	Operating direction	Working pressure MPa										
		0.1	0.15	0.2	0.3	0.4	0.5	0.6	0.7	0.8	0.9	1.0
ø40	Push	$1.26x10^2$	$1.88x10^2$	$2.51x10^2$	$3.77x10^2$	$5.03x10^2$	$6.28x10^2$	$7.54x10^2$	$8.80x10^2$	$1.01x10^3$	$1.13x10^3$	$1.26x10^3$
	Pull	$1.06x10^2$	$1.58x10^2$	$2.11x10^2$	$3.17x10^2$	$4.22x10^2$	$5.28x10^2$	$6.33x10^2$	$7.39x10^2$	$8.44x10^2$	$9.50x10^2$	$1.06x10^3$
ø50	Push	$1.96x10^2$	$2.95x10^2$	$3.93x10^2$	$5.89x10^2$	$7.85x10^2$	$9.82x10^2$	$1.18x10^3$	$1.37x10^3$	$1.57x10^3$	$1.77x10^3$	$1.96x10^3$
	Pull	$1.65x10^2$	$2.47x10^2$	$3.30x10^2$	$4.95x10^2$	$6.60x10^2$	$8.25x10^2$	$9.90x10^2$	$1.15x10^3$	$1.32x10^3$	$1.48x10^3$	$1.65x10^3$
ø63	Push	$3.12x10^2$	$4.68x10^2$	$6.23x10^2$	$9.35x10^2$	$1.25x10^3$	$1.56x10^3$	$1.87x10^3$	$2.18x10^3$	$2.49x10^3$	$2.81x10^3$	$3.12x10^3$
	Pull	$2.80x10^2$	$4.20x10^2$	$5.61x10^2$	$8.41x10^2$	$1.12x10^3$	$1.40x10^3$	$1.68x10^3$	$1.96x10^3$	$2.24x10^3$	$2.52x10^3$	$2.80x10^3$
ø80	Push	$5.03x10^2$	$7.54x10^2$	$1.01x10^3$	$1.51x10^3$	$2.01x10^3$	$2.51x10^3$	$3.02x10^3$	$3.52x10^3$	$4.02x10^3$	$4.52x10^3$	$5.03x10^3$
	Pull	$4.54x10^2$	$6.80x10^2$	$9.07x10^2$	$1.36x10^3$	$1.81x10^3$	$2.27x10^3$	$2.72x10^3$	$3.17x10^3$	$3.63x10^3$	$4.08x10^3$	$4.54x10^3$
ø100	Push	$7.85x10^2$	$1.18x10^3$	$1.57x10^3$	$2.36x10^3$	$3.14x10^3$	$3.93x10^3$	$4.71x10^3$	$5.50x10^3$	$6.28x10^3$	$7.07x10^3$	$7.85x10^3$
	Pull	$7.15x10^2$	$1.07x10^3$	$1.43x10^3$	$2.14x10^3$	$2.86x10^3$	$3.57x10^3$	$4.29x10^3$	$5.00x10^3$	$5.72x10^3$	$6.43x10^3$	$7.15x10^3$

SCP*3
CMK2
CMA2
SCM
SCG
SCA2
SCS2
CKV2
CAV2/COVP/N2
SSD2
SSG
SSD
CAT
MDC2
MVC
SMG
MSD/MSDG
FC*
STK
SRL3
SRG3
SRM3
SRT3
MRL2
MRG2
SM-25
ShkAbs
FJ
FK
Spd Contr
Ending

How to order

No switch (built-in magnet for switch)

SCA2-Q2 - LB - 40 ( ) B - 100 - H ——— S I

With switch (built-in magnet for switch)

SCA2-Q2 - LB - 40 ( ) B - 100 - H - T0H - R - S I

Ⓐ Mounting *1

Ⓑ Bore size

Ⓒ Port thread

Ⓓ Cushion

Ⓔ Stroke *2

Ⓕ Position locking mechanism

Ⓖ Switch model No. *4

Ⓗ Switch quantity *5

Ⓘ Option *6 *7

Ⓙ Accessory *8

Code	Description
Ⓐ Mounting	
00	Basic
LB	Axial foot
FA	Rod side flange
FB	Head side flange
FC	Head side special flange
CA	Eye bracket
CB	Clevis bracket (pin and snap ring included)
TC	Intermediate trunnion
TA	Rod side trunnion
TB	Head side trunnion
TF	Intermediate supporting hole trunnion (ø40 is not available)
TD	Rod side hole trunnion (ø40 is not available)
TE	Head side hole trunnion (ø40 is not available)
Ⓑ Bore size (mm)	
40	ø40
50	ø50
63	ø63
80	ø80
100	ø100
Ⓒ Port thread	
Blank	Rc thread
N	NPT thread (made-to-order product)
G	G thread (made-to-order product)
Ⓓ Cushion	
B	Both sides cushioned
R	Rod side cushioned
H	Head side cushioned
N	Without cushion

Ⓔ Stroke (mm)

Bore size	Stroke *3	Custom stroke
ø40	5 to 600	In 1 mm increments
ø50	5 to 600	
ø63	5 to 600	
ø80	5 to 700	
ø100	5 to 800	

Ⓕ Position locking mechanism	
H	With head side position locking
R	With rod side position locking
Ⓖ Switch model No.	
Refer to the switch model numbers on the next page.	
*** Lead wire length**	
Blank	1 m (standard)
3	3 m (option)
5	5 m (option)
Ⓗ Switch quantity	
R	1 on rod side
H	1 on head side
D	2
T	3
Ⓘ Option	
M	Piston rod material (stainless steel)
S	Cushion needle position S
M0	Non-locking manual override (with release bolt)
M1	Locking manual override
Ⓙ Accessory	
I	Rod eye
Y	Rod clevis (pin and snap ring included)
B1	Eye bracket
B2	Clevis bracket (pin and snap ring included)
B3	Eye bracket
B4	Trunnion No. 2 bracket (2 pcs./set)

⚠ Precautions for model No. selection

*1 : Mounting bracket will be shipped with the product. (Trunnion are assembled at shipment.)
TA mounting with R position locking mechanism is not available.
TB mounting with H position locking mechanism is not available.

*2 : If the stroke exceeds the max. stroke, refer to Ending Page 69.

*3 : Refer to pages 494 and 495 for the min. stroke with switch.

*4 : Switches are shipped with the product.

*5 : When selecting TA, TD, TB or TE mounting, the switch quantity is limited to "H" (1 on head side) for TA and TD, and "R" (1 on rod side) for TB and TE.

*6 : Only non-locking manual override unless "M0" or "M1" of Ⓘ option is selected. Release bolt is not included.

*7 : When selecting TA, TD, TB or TE mounting format, the cushion needle position is blank and fixed at S, with no options available.

*8 : "I" and "Y" cannot be selected together.

*9 : Refer to Ending Page 85 for custom specifications of rod end form.

*10: Refer to page 448 for combinations of variations/options.

[Example of model No.]

SCA2-Q2-LB-40B-100-H-T0H-R-SI

Model: Medium bore size cylinder, position locking

Ⓐ Mounting	: Axial foot
Ⓑ Bore size	: ø40 mm
Ⓒ Port thread	: Rc thread
Ⓓ Cushion	: Both sides cushioned
Ⓔ Stroke	: 100 mm
Ⓕ Position locking mechanism	: With head side position locking
Ⓖ Switch model No.	: Reed T0H switch, lead wire length 1 m
Ⓗ Switch quantity	: 1 on rod side
Ⓘ Option	: Cushion needle position S
Ⓙ Accessory	: Rod eye

[G] Switch model No.

T-switch model No.						
Axial lead wire	Radial lead wire	Contact	Voltage AC	Voltage DC	Indicator	Lead wire
T0H*	T0V*	Reed	●	●	1-color LED	2-wire
T5H*	T5V*	Reed	●	●	No indicator lamp	2-wire
T8H*	T8V*	Reed	●	●	1-color LED	2-wire
T1H*	T1V*	Proximity	●		1-color LED	2-wire
T2H*	T2V*	Proximity		●	1-color LED	2-wire
T3H*	T3V*	Proximity		●	1-color LED	3-wire
T2WH*	T2WV*	Proximity		●	2-color LED	2-wire
T2YH*	T2YV*	Proximity		●	2-color LED	2-wire
T3WH*	T3WV*	Proximity		●	2-color LED	3-wire
T3YH*	T3YV*	Proximity		●	2-color LED	3-wire
T3PH*	T3PV*	Proximity		●	1-color LED	3-wire
T2YD*	-	Proximity		●	2-color LED AC magnetic field	2-wire
T2YDT*	-	Proximity		●	2-color LED AC magnetic field	2-wire
T2JH*	T2JV*	Proximity		●	1-color LED off-delay	2-wire

How to order switch

[T-switch]

● Switch body + mounting bracket set

SCA2 - T0H - 40

- T0H: Switch model No. (Item Ⓖ)
- 40: Bore size (Item Ⓑ on page 498)

● Switch body only

SW - T0H

- T0H: Switch model No. (Item Ⓖ)

* Contact CKD when using an environment-friendly T-switch.

● Switch mounting bracket set

SCA2 - TS - 40

- TS: Mounting bracket
- 40: Bore size (Item Ⓑ on page 498)

[T2YD switch]

● Switch body + mounting bracket set

SCA2 - T2YD - 40

- T2YD: Switch model No. (Item Ⓖ on page 498)
- 40: Bore size (Item Ⓑ on page 498)

● Switch body only

SW - T2YD

- T2YD: Switch model No. (Item Ⓖ on page 498)

● Mounting bracket set

SCA2 - T - 40

- 40: Bore size (Item Ⓑ on page 498)

How to order mounting bracket

Bore size (mm) / Mounting bracket	ø40	ø50	ø63	ø80	ø100
Foot (LB) *2	S1-LB-40	S1-LB-50	S1-LB-63	S1-LB-80	S1-LB-100
Flange (FA/FB)	S1-FA-40	S1-FA-50	S1-FA-63	S1-FA-80	S1-FA-100
Eye bracket (CA)	S1-CA-40	S1-CA-50	S1-CA-63	S1-CA-80	S1-CA-100
Clevis bracket (CB)	S1-CB-40	S1-CB-50	S1-CB-63	S1-CB-80	S1-CB-100

*1 : For material of the mounting bracket, refer to page 456.
*2 : The foot mounting bracket is provided as 2 pcs./set.
*3 : All mounting brackets are supplied with mounting bolts.

Internal structure and parts list

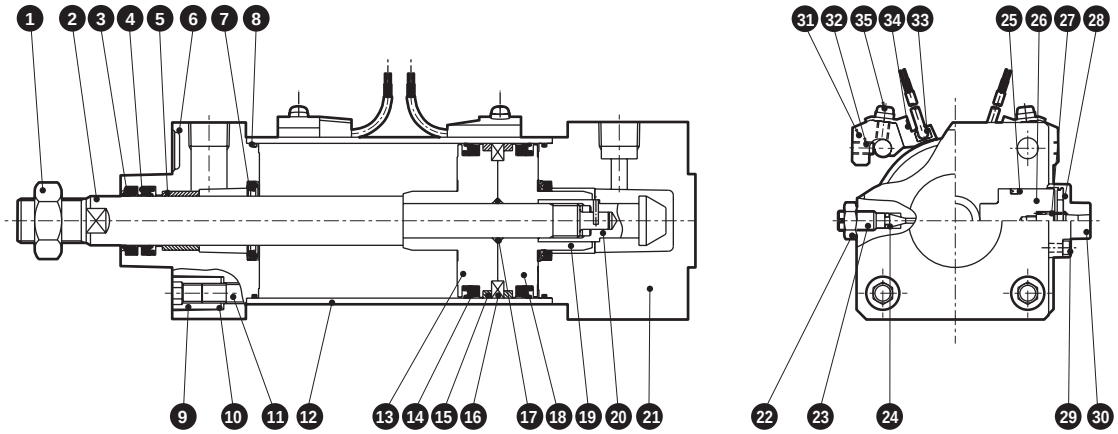

(The figure shows the type with head cover side position locking.)

No.	Part name	Material	Remarks	No.	Part name	Material	Remarks
1	Rod nut	Steel	Zinc chromate	19	Sleeve	Steel	Nitriding
2	Piston rod	Steel	Industrial chrome plating	20	Spring pin	Steel	Black finish
3	Dust wiper	Nitrile rubber		21	Head cover	Aluminum alloy casting *2	Paint
4	Rod packing	Nitrile rubber		22	Hexagon nut	Copper alloy	Nickel plating
5	Bush	Oil impregnated bearing alloy		23	Cushion needle	Copper alloy	Nickel plating
6	Rod cover	Aluminum alloy die-casting *1	Paint	24	Needle gasket	Nitrile rubber	
7	Cushion packing	Nitrile rubber/steel		25	Stopper packing	Nitrile rubber	
8	Cylinder gasket	Nitrile rubber		26	Stopper piston	Steel	Nitriding
9	Round nut	Steel	Zinc chromate	27	Coil spring	Piano wire	Electrodeposition
10	Conical spring washer	Steel	Black finish	28	Cushion rubber	Urethane rubber	
11	Tie rod	Steel	Zinc chromate	29	Hex socket screw	Alloy steel	Zinc chromate
12	Cylinder tube	Aluminum alloy	Alumite treatment	30	Stopper cover	Aluminum alloy die-casting	
13	Piston (R)	Aluminum alloy die-casting		With switch			
14	Piston packing	Nitrile rubber		31	Switch mounting base	Aluminum alloy	
15	Wear ring	Polyacetal resin		32	Hexagon socket set screw	Alloy steel	Black finish
16	Magnet	Plastic		33	Cylinder switch	-	
17	Piston gasket	Nitrile rubber		34	Switch holder	Aluminum alloy	
18	Piston (B)	Aluminum alloy die-casting		35	Phillips pan head machine screw/captive washer	Steel	Zinc chromate

*1: Aluminum alloy casting for the rod side position locking.
*2: Aluminum alloy die-casting for the rod side position locking.

Repair parts list

Bore size (mm)	Kit No.	Repair parts No.
ø40	SCA2-Q2-40K	3 4 7 8 14 15 24 25 28
ø50	SCA2-Q2-50K	
ø63	SCA2-Q2-63K	
ø80	SCA2-Q2-80K	
ø100	SCA2-Q2-100K	

Note: Specify the kit No. when placing an order.

MEMO

SCP*3
CMK2
CMA2
SCM
SCG
SCA2
SCS2
CKV2
CAV2/ COVP/N2
SSD2
SSG
SSD
CAT
MDC2
MVC
SMG
MSD/ MSDG
FC*
STK
SRL3
SRG3
SRM3
SRT3
MRL2
MRG2
SM-25
ShkAbs
FJ
FK
Spd Contr
Ending

Dimensions

● Basic (00) with head side position locking

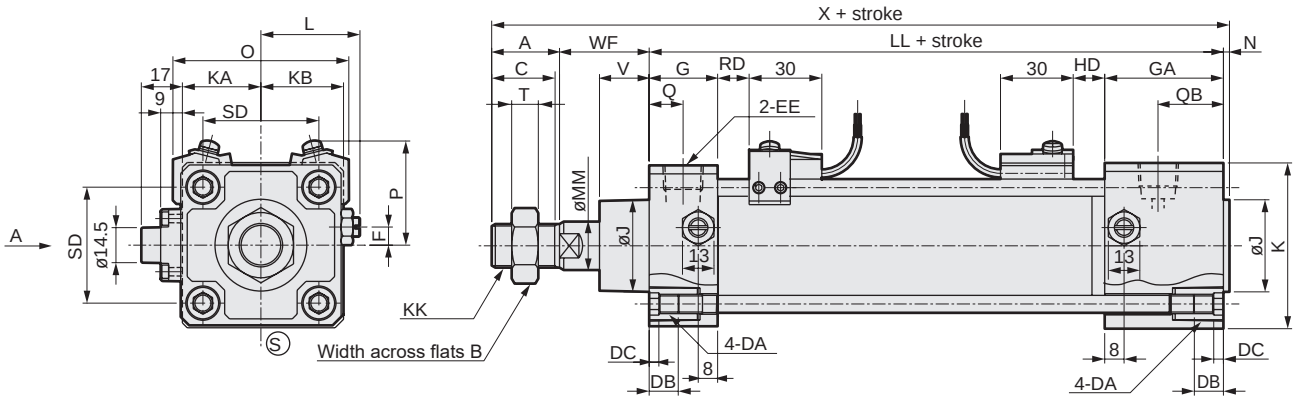

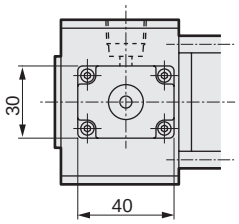

A arrow view

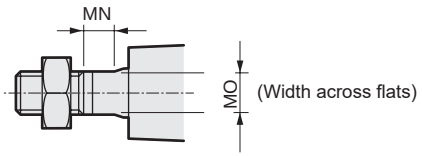

Code	Basic (00)																
Bore size (mm)	A	B	C	DA	DB	DC	EE	F	G	GA	J	K	KA	KB	KK	L	LL
ø40	22	22	20	M8	12	4	Rc1/4	7.5	26	49	31	60	30	30	M14x1.5	38 to 39.5	120.5
ø50	28	27	26	M8	12	4	Rc3/8	0	28	49	38	68	32.5	34	M18x1.5	41 to 43.5	127
ø63	28	27	26	M8	12	4	Rc3/8	0	30	49	38	80	38	40	M18x1.5	47.5 to 50	130
ø80	36	32	34	M12	16	5	Rc1/2	0	34	53	43	100	49	50	M22x1.5	56 to 59	144
ø100	45	41	43	M12	16	5	Rc1/2	0	36	53	51	118	58.5	59	M26x1.5	66 to 69	156

Code												With switch									
Bore size (mm)	MM	MN	MO	N	QA	QB	SD	T	V	WF	X	O	P	T0, T5 T2, T3		T2Y T3Y, T2J		T8		T2W, T3W	
														RD	HD	RD	HD	RD	HD	RD	HD
ø40	16	8	14	2	13	26	40.5	8	18.5	33.5	178	66	41.5	11	15.5	10	14.5	5	9.5	13	17.5
ø50	20	8	17	2.5	14	27	48	11	20.5	37	194.5	73	43	13	18	12	17	7	12	15	20
ø63	20	8	17	3	15	28	59	11	21	35	196	85	47	13	19	12	18	7	13	15	21
ø80	25	11	22	3.5	17	27	74	13	23.5	48	231.5	105	57	14.5	23.5	13.5	22.5	8.5	17.5	16.5	25.5
ø100	30	13	27	4	18	27	90	16	32	53	258	121	63	18.5	29.5	17.5	28.5	12.5	23.5	20.5	31.5

*1: Refer to page 615 for dimensions of projecting section of T1 and T2YD switch.
*2: For the dimensions of the accessories, refer to pages 470 and 471.

Dimensions

● Basic (00) with rod side position locking

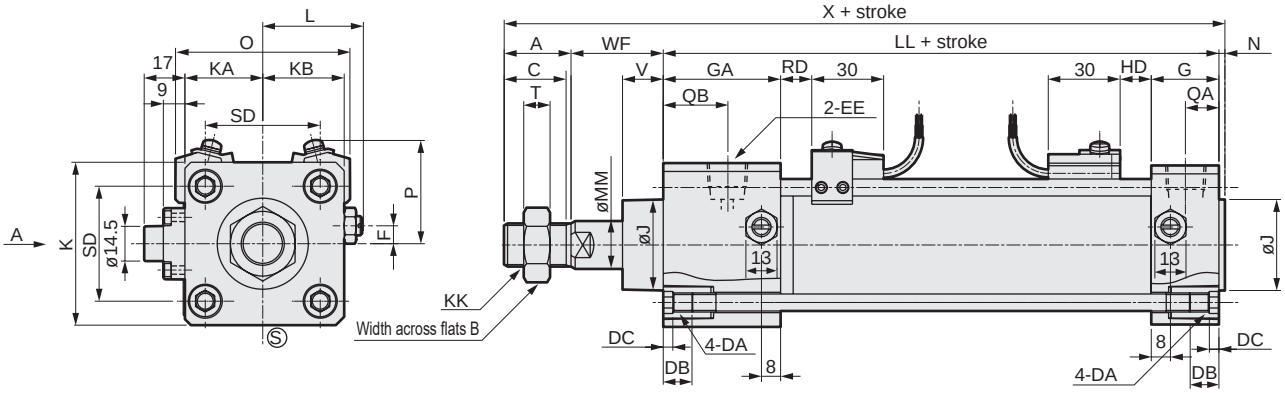

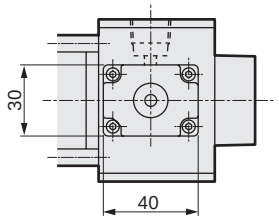

A arrow view

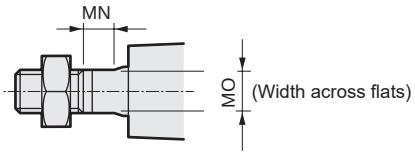

Code	Basic (00)																	
Bore size (mm)	A	B	C	DA	DB	DC	EE	F	G	GA	J	K	KA	KB	KK	L	LL	MM	MN
ø40	22	22	20	M8	12	4	Rc1/4	7.5	26	49	31	60	30	30	M14x1.5	38 to 39.5	120.5	16	8
ø50	28	27	26	M8	12	4	Rc3/8	0	28	49	38	68	32.5	34	M18x1.5	41 to 43.5	127	20	8
ø63	28	27	26	M8	12	4	Rc3/8	0	30	49	38	80	38	40	M18x1.5	47.5 to 50	130	20	8
ø80	36	32	34	M12	16	5	Rc1/2	0	34	53	43	100	49	50	M22x1.5	56 to 59	144	25	11
ø100	45	41	43	M12	16	5	Rc1/2	0	36	53	51	118	58.5	59	M26x1.5	66 to 69	156	30	13

Code										With switch									
Bore size (mm)	MO	N	QA	QB	SD	T	V	WF	X	O	P	T0, T5 T2, T3		T2Y T3Y, T2J		T8		T2W, T3W	
												RD	HD	RD	HD	RD	HD	RD	HD
ø40	14	2	13	26	40.5	8	18.5	33.5	178	66	41.5	15.5	11	14.5	10	9.5	5	17.5	13
ø50	17	2.5	14	27	48	11	17	33.5	191	73	43	18	13	17	12	12	7	20	15
ø63	17	3	15	28	59	11	17	31	192	85	47	19	13	18	12	13	7	21	15
ø80	22	3.5	17	27	74	13	18.5	43	226.5	105	57	23.5	14.5	22.5	13.5	17.5	8.5	25.5	16.5
ø100	27	4	18	27	90	16	29	50	255	121	63	29.5	18.5	28.5	17.5	23.5	12.5	31.5	20.5

*1: Refer to page 615 for dimensions of projecting section of T1 and T2YD switch.
*2: For the dimensions of the accessories, refer to pages 470 and 471.

SCP*3
CMK2
CMA2
SCM
SCG
SCA2
SCS2
CKV2
CAV2/ COVP/N2
SSD2
SSG
SSD
CAT
MDC2
MVC
SMG
MSD/ MSDG
FC*
STK
SRL3
SRG3
SRM3
SRT3
MRL2
MRG2
SM-25
ShkAbs
FJ
FK
Spd Contr
Ending

Dimensions

● Axial foot (LB) with head side position locking

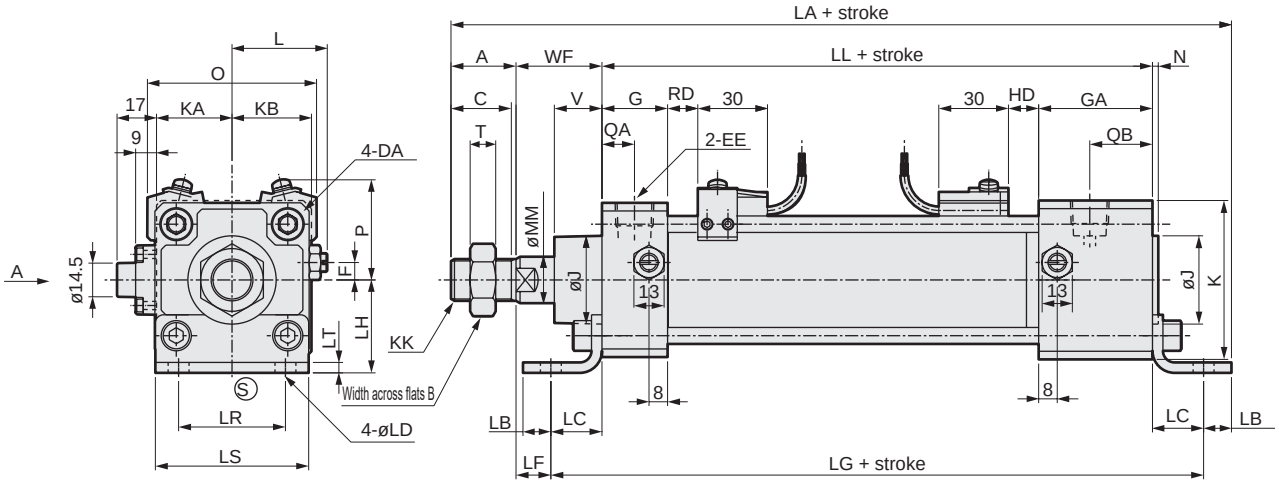

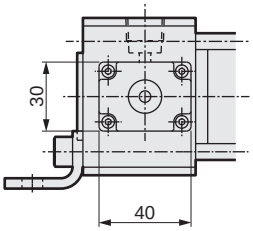

A arrow view

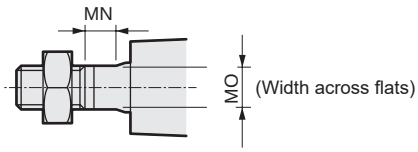

Code	Axial foot (LB) (unit: mm)																				
Bore size (mm)	A	B	C	DA	EE	F	G	GA	J	K	KA	KB	KK	L	LL	MM	MN	MO	N	QA	QB
ø40	22	22	20	M8	Rc1/4	7.5	26	49	31	60	30	30	M14x1.5	38 to 39.5	120.5	16	8	14	2	13	26
ø50	28	27	26	M8	Rc3/8	0	28	49	38	68	32.5	34	M18x1.5	41 to 43.5	127	20	8	17	2.5	14	27
ø63	28	27	26	M8	Rc3/8	0	30	49	38	80	38	40	M18x1.5	47.5 to 50	130	20	8	17	3	15	28
ø80	36	32	34	M12	Rc1/2	0	34	53	43	100	49	50	M22x1.5	56 to 59	144	25	11	22	3.5	17	27
ø100	45	41	43	M12	Rc1/2	0	36	53	51	118	58.5	59	M26x1.5	66 to 69	156	30	13	27	4	18	27

Code				Mounting method										With switch									
Bore size (mm)	T	V	WF	LA	LB	LC	LD	LF	LG	LH	LR	LS	LT	O	P	T0, T5 T2, T3		T2Y T3Y, T2J		T8		T2W, T3W	
																RD	HD	RD	HD	RD	HD	RD	HD
ø40	8	18.5	33.5	205.5	10	19.5	9	14	159.5	40	40	57	3.2	66	41.5	11	15.5	10	14.5	5	9.5	13	17.5
ø50	11	20.5	37	226	12	22	9	15	171	40	46	66	4.5	73	43	13	18	12	17	7	12	15	20
ø63	11	21	35	235	12	30	11	5	190	50	60	80	4.5	85	47	13	19	12	18	7	13	15	21
ø80	13	23.5	48	279	14	37	14	11	218	60	74	98	6.0	105	57	14.5	23.5	13.5	22.5	8.5	17.5	16.5	25.5
ø100	16	32	53	306	21	31	14	22	218	67	80	118	6.0	121	63	18.5	29.5	17.5	28.5	12.5	23.5	20.5	31.5

*1: Refer to page 615 for dimensions of projecting section of T1 and T2YD switch.
*2: For the dimensions of the accessories, refer to pages 470 and 471.

Dimensions

● Axial foot (LB) with rod side position locking

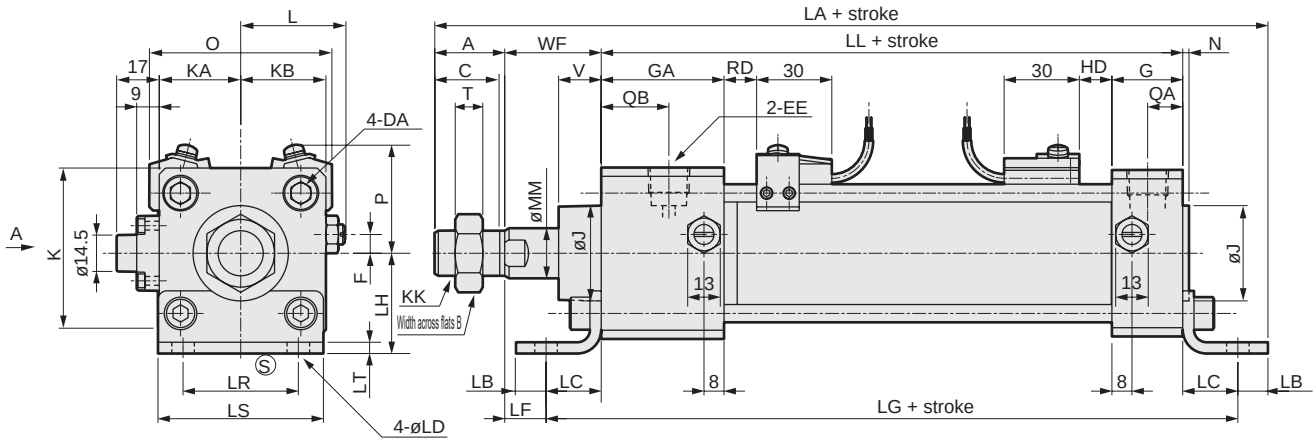

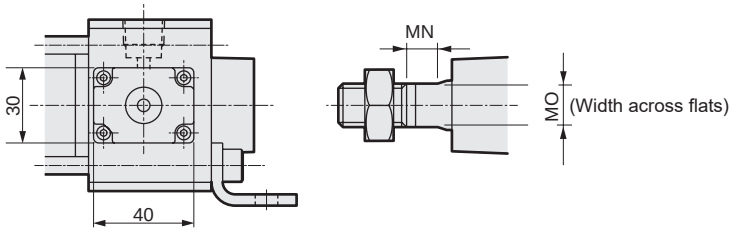

A arrow view

Code	Axial foot (LB) (unit: mm)																				
Bore size (mm)	A	B	C	DA	EE	F	G	GA	J	K	KA	KB	KK	L	LL	MM	MN	MO	N	QA	QB
ø40	22	22	20	M8	Rc1/4	7.5	26	49	31	60	30	30	M14x1.5	38 to 39.5	120.5	16	8	14	2	13	26
ø50	28	27	26	M8	Rc3/8	0	28	49	38	68	32.5	34	M18x1.5	41 to 43.5	127	20	8	17	2.5	14	27
ø63	28	27	26	M8	Rc3/8	0	30	49	38	80	38	40	M18x1.5	47.5 to 50	130	20	8	17	3	15	28
ø80	36	31	34	M12	Rc1/2	0	34	53	43	100	49	50	M22x1.5	56 to 59	144	25	11	22	3.5	17	27
ø100	45	42	43	M12	Rc1/2	0	36	53	51	118	58.5	59	M26x1.5	66 to 69	156	30	13	27	4	18	27

Code				Mounting method										With switch									
Bore size (mm)	T	V	WF	LA	LB	LC	LD	LF	LG	LH	LR	LS	LT	O	P	T0, T5 T2, T3		T2Y T3Y, T2J		T8		T2W, T3W	
																RD	HD	RD	HD	RD	HD	RD	HD
ø40	8	18.5	33.5	205.5	10	19.5	9	14	159.5	40	40	57	3.2	66	41.5	15.5	11	14.5	10	9.5	5	17.5	13
ø50	11	17	33.5	222.5	12	22	9	11.5	171	40	46	66	4.5	73	43	18	13	17	12	12	7	20	15
ø63	11	17	31	231	12	30	11	1	190	50	60	80	4.5	85	47	19	13	18	12	13	7	21	15
ø80	13	18.5	43	274	14	37	14	6	218	60	74	98	6.0	105	57	23.5	14.5	22.5	13.5	17.5	8.5	25.5	16.5
ø100	16	29	50	303	21	31	14	19	218	67	80	118	6.0	121	63	29.5	18.5	28.5	17.5	23.5	12.5	31.5	20.5

*1: Refer to page 615 for dimensions of projecting section of T1 and T2YD switch.
*2: For the dimensions of the accessories, refer to pages 470 and 471.

SCP*3
CMK2
CMA2
SCM
SCG
SCA2
SCS2
CKV2
CAV2/ COVP/N2
SSD2
SSG
SSD
CAT
MDC2
MVC
SMG
MSD/ MSDG
FC*
STK
SRL3
SRG3
SRM3
SRT3
MRL2
MRG2
SM-25
ShkAbs
FJ
FK
Spd Contr
Ending

Dimensions

● Rod side flange (FA) with head side position locking

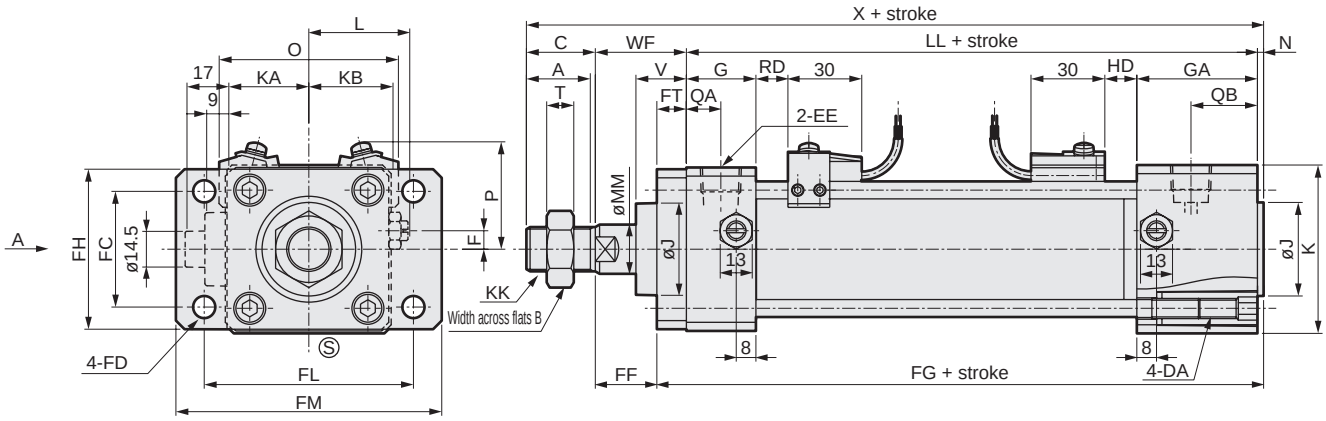

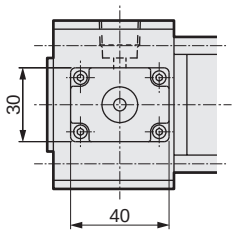

A arrow view

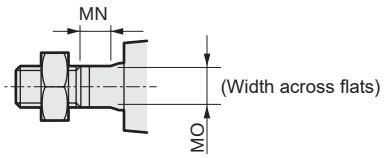

Code	Rod side flange (FA) (unit: mm)																				
Bore size (mm)	A	B	C	DA	EE	F	G	GA	J	K	KA	KB	KK	L	LL	MM	MN	MO	N	QA	QB
ø40	22	22	20	M8	Rc1/4	7.5	26	49	31	60	30	30	M14x1.5	38 to 39.5	120.5	16	8	14	2	13	26
ø50	28	27	26	M8	Rc3/8	0	28	49	38	68	32.5	34	M18x1.5	41 to 43.5	127	20	8	17	2.5	14	27
ø63	28	27	26	M8	Rc3/8	0	30	49	38	80	38	40	M18x1.5	47.5 to 50	130	20	8	17	3	15	28
ø80	36	32	34	M12	Rc1/2	0	34	53	43	100	49	50	M22x1.5	56 to 59	144	25	11	22	3.5	17	27
ø100	45	41	43	M12	Rc1/2	0	36	53	51	118	58.5	59	M26x1.5	66 to 69	156	30	13	27	4	18	27

Code					Mounting method								With switch									
Bore size (mm)	T	V	WF	X	FC	FD	FF	FG	FH	FL	FM	FT	O	P	T0, T5 T2, T3		T2Y T3Y, T2J		T8		T2W, T3W	
															RD	HD	RD	HD	RD	HD	RD	HD
ø40	8	18.5	33.5	178	40	9	21.5	134.5	57	80	100	12	66	41.5	11	15.5	10	14.5	5	9.5	13	17.5
ø50	11	20.5	37	194.5	47	9	25	141.5	65	85	108	12	73	43	13	18	12	17	7	12	15	20
ø63	11	21	35	196	60	11	19	149	80	106	130	16	85	47	13	19	12	18	7	13	15	21
ø80	13	23.5	48	231.5	74	14	29	166.5	98	125	153	19	105	57	14.5	23.5	13.5	22.5	8.5	17.5	16.5	25.5
ø100	16	32	53	258	88	14	34	179	118	144	180	19	121	63	18.5	29.5	17.5	28.5	12.5	23.5	20.5	31.5

*1: Refer to page 615 for dimensions of projecting section of T1 and T2YD switch.
*2: For the dimensions of the accessories, refer to pages 470 and 471.

Dimensions

● Rod side flange (FA) with rod side position locking

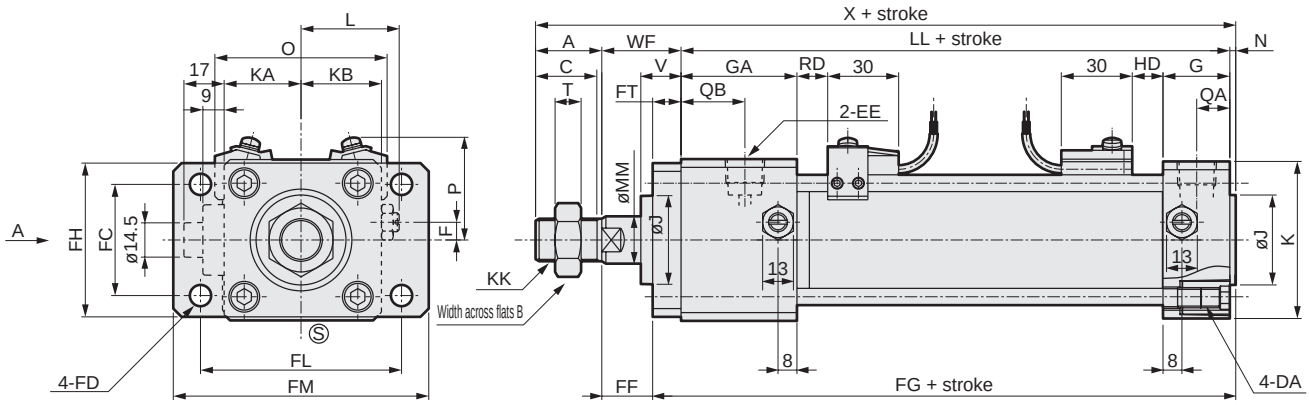

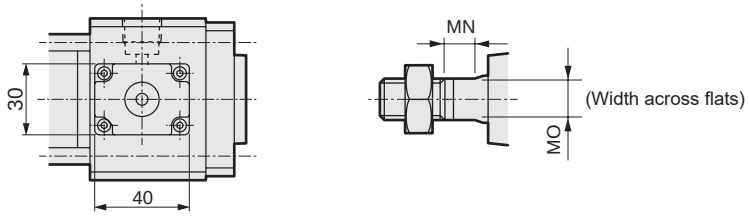

A arrow view

Code	Rod side flange (FA) (unit: mm)																				
Bore size (mm)	A	B	C	DA	EE	F	G	GA	J	K	KA	KB	KK	L	LL	MM	MN	MO	N	QA	QB
ø40	22	22	20	M8	Rc1/4	7.5	26	49	31	60	30	30	M14x1.5	38 to 39.5	120.5	16	8	14	2	13	26
ø50	28	27	26	M8	Rc3/8	0	28	49	38	68	32.5	34	M18x1.5	41 to 43.5	127	20	8	17	2.5	14	27
ø63	28	27	26	M8	Rc3/8	0	30	49	38	80	38	40	M18x1.5	47.5 to 50	130	20	8	17	3	15	28
ø80	36	32	34	M12	Rc1/2	0	34	53	43	100	49	50	M22x1.5	56 to 59	144	25	11	22	3.5	17	27
ø100	45	41	43	M12	Rc1/2	0	36	53	51	118	58.5	59	M26x1.5	66 to 69	156	30	13	27	4	18	27

Code					Mounting method								With switch									
Bore size (mm)	T	V	WF	X	FC	FD	FF	FG	FH	FL	FM	FT	O	P	T0, T5 T2, T3		T2Y T3Y, T2J		T8		T2W, T3W	
															RD	HD	RD	HD	RD	HD	RD	HD
ø40	8	18.5	33.5	178	40	9	21.5	134.5	57	80	100	12	66	41.5	15.5	11	14.5	10	9.5	5	17.5	13
ø50	11	17	33.5	191	47	9	21.5	141.5	65	85	108	12	73	43	18	13	17	12	12	7	20	15
ø63	11	17	31	192	60	11	15	149	80	106	130	16	85	47	19	13	18	12	13	7	21	15
ø80	13	18.5	43	226.5	74	14	24	166.5	98	125	153	19	105	57	23.5	14.5	22.5	13.5	17.5	8.5	25.5	16.5
ø100	16	29	50	255	88	14	31	179	118	144	180	19	121	63	29.5	18.5	28.5	17.5	23.5	12.5	31.5	20.5

*1: Refer to page 615 for dimensions of projecting section of T1 and T2YD switch.
*2: For the dimensions of the accessories, refer to pages 470 and 471.

SCP*3
CMK2
CMA2
SCM
SCG
SCA2
SCS2
CKV2
CAV2/ COVP/N2
SSD2
SSG
SSD
CAT
MDC2
MVC
SMG
MSD/ MSDG
FC*
STK
SRL3
SRG3
SRM3
SRT3
MRL2
MRG2
SM-25
ShkAbs
FJ
FK
Spd Contr
Ending

Dimensions

CAD

● Head side flange (FB) with head side position locking

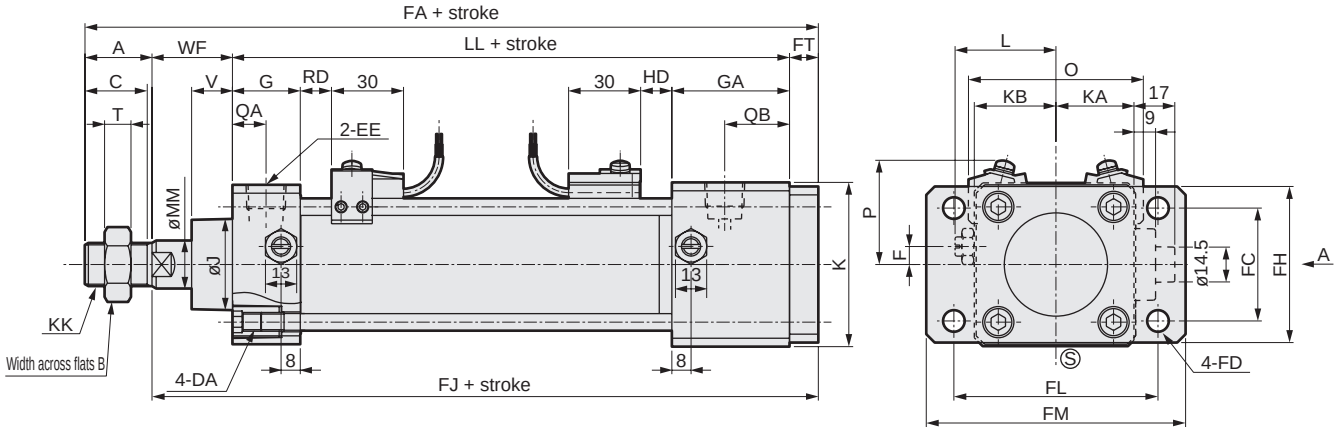

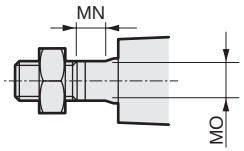

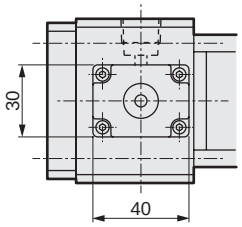

A arrow view

Code / Bore size (mm)	Head side flange (FB) (unit: mm)																				
	A	B	C	DA	EE	F	G	GA	J	K	KA	KB	KK	L	LL	MM	MN	MO	QA	QB	T
ø40	22	22	20	M8	Rc1/4	7.5	26	49	31	60	30	30	M14x1.5	38 to 39.5	120.5	16	8	14	13	26	8
ø50	28	27	26	M8	Rc3/8	0	28	49	38	68	32.5	34	M18x1.5	41 to 43.5	127	20	8	17	14	27	11
ø63	28	27	26	M8	Rc3/8	0	30	49	38	80	38	40	M18x1.5	47.5 to 50	130	20	8	17	15	28	11
ø80	36	32	34	M12	Rc1/2	0	34	53	43	100	49	50	M22x1.5	56 to 59	144	25	11	22	17	27	13
ø100	45	41	43	M12	Rc1/2	0	36	53	51	118	58.5	59	M26x1.5	66 to 69	156	30	13	27	18	27	16

Code / Bore size (mm)			Mounting method								With switch									
	V	WF	FA	FC	FD	FJ	FH	FL	FM	FT	O	P	T0, T5 T2, T3		T2Y T3Y, T2J		T8		T2W, T3W	
													RD	HD	RD	HD	RD	HD	RD	HD
ø40	18.5	33.5	188	40	9	166	57	80	100	12	66	41.5	11	15.5	10	14.5	5	9.5	13	17.5
ø50	20.5	37	204	47	9	176	65	85	108	12	73	43	13	18	12	17	7	12	15	20
ø63	21	35	209	60	11	181	80	106	130	16	85	47	13	19	12	18	7	13	15	21
ø80	23.5	48	247	74	14	211	98	125	153	19	105	57	14.5	23.5	13.5	22.5	8.5	17.5	16.5	25.5
ø100	32	53	273	88	14	228	118	144	180	19	121	63	18.5	29.5	17.5	28.5	12.5	23.5	20.5	31.5

*1: Refer to page 615 for dimensions of projecting section of T1 and T2YD switch.
*2: For the dimensions of the accessories, refer to pages 470 and 471.

Dimensions

● Head side flange (FB) with rod side position locking

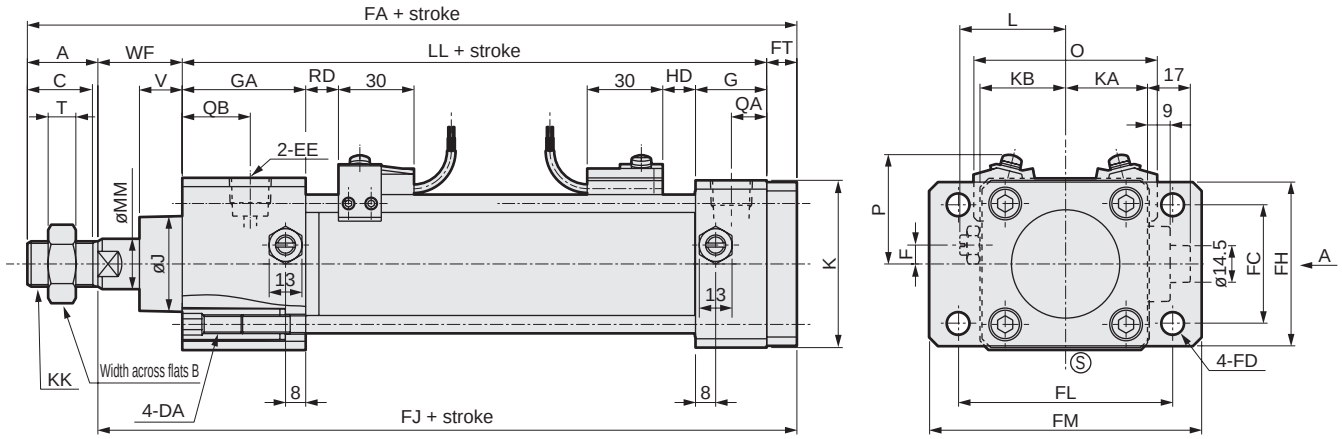

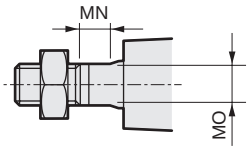

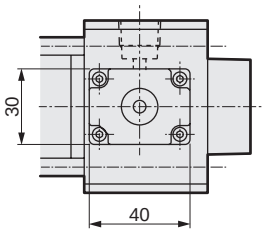

A arrow view

Code	Head side flange (FB) (unit: mm)																				
Bore size (mm)	A	B	C	DA	EE	F	G	GA	J	K	KA	KB	KK	L	LL	MM	MN	MO	QA	QB	T
ø40	22	22	20	M8	Rc1/4	7.5	26	49	31	60	30	30	M14x1.5	38 to 39.5	120.5	16	8	14	13	26	8
ø50	28	27	26	M8	Rc3/8	0	28	49	38	68	32.5	34	M18x1.5	41 to 43.5	127	20	8	17	14	27	11
ø63	28	27	26	M8	Rc3/8	0	30	49	38	80	38	40	M18x1.5	47.5 to 50	130	20	8	17	15	28	11
ø80	36	32	34	M12	Rc1/2	0	34	53	43	100	49	50	M22x1.5	56 to 59	144	25	11	22	17	27	13
ø100	45	41	43	M12	Rc1/2	0	36	53	51	118	58.5	59	M26x1.5	66 to 69	156	30	13	27	18	27	16

Code			Mounting method								With switch									
Bore size (mm)	V	WF	FA	FC	FD	FJ	FH	FL	FM	FT	O	P	T0, T5 T2, T3		T2Y T3Y, T2J		T8		T2W, T3W	
													RD	HD	RD	HD	RD	HD	RD	HD
ø40	18.5	33.5	188	40	9	166	57	80	100	12	66	41.5	15.5	11	14.5	10	9.5	5	17.5	13
ø50	17	33.5	200.5	47	9	172.5	65	85	108	12	73	43	18	13	17	12	12	7	20	15
ø63	17	31	205	60	11	177	80	106	130	16	85	47	19	13	18	12	13	7	21	15
ø80	18.5	43	242	74	14	206	98	125	153	19	105	57	23.5	14.5	22.5	13.5	17.5	8.5	25.5	16.5
ø100	29	50	270	88	14	225	118	144	180	19	121	63	29.5	18.5	28.5	17.5	23.5	12.5	31.5	20.5

*1: Refer to page 615 for dimensions of projecting section of T1 and T2YD switch.
*2: For the dimensions of the accessories, refer to pages 470 and 471.

SCP*3
CMK2
CMA2
SCM
SCG
SCA2
SCS2
CKV2
CAV2/ COVP/N2
SSD2
SSG
SSD
CAT
MDC2
MVC
SMG
MSD/ MSDG
FC*
STK
SRL3
SRG3
SRM3
SRT3
MRL2
MRG2
SM-25
ShkAbs
FJ
FK
Spd Contr
Ending

Dimensions

● Head side special flange (FC) with head side position locking

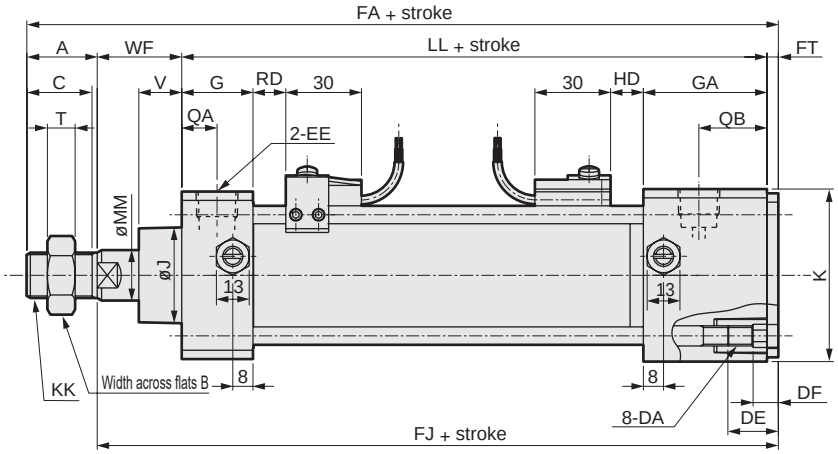

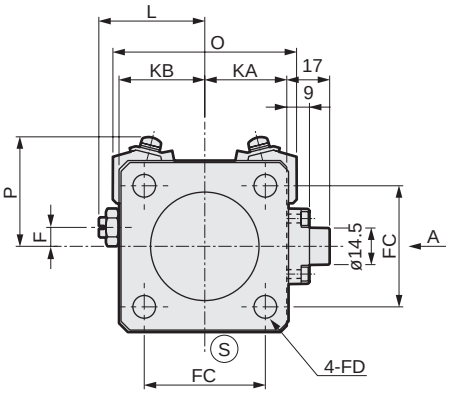

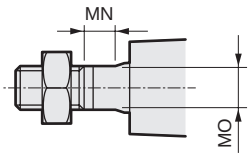

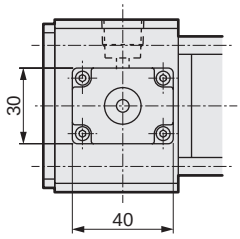

A arrow view

Code / Bore size (mm)	Head side special flange (FC) (unit: mm)																				
	A	B	C	DA	DE	DF	EE	F	G	GA	J	K	KA	KB	KK	L	LL	MM	MN	MO	QA
ø40	22	22	20	M8	16.5	8.5	Rc1/4	7.5	26	49	31	60	30	30	M14x1.5	38 to 39.5	120.5	16	8	14	13
ø50	28	27	26	M8	16.5	8.5	Rc3/8	0	28	49	38	68	32.5	34	M18x1.5	41 to 43.5	127	20	8	17	14
ø63	28	27	26	M8	16.5	8.5	Rc3/8	0	30	49	38	80	38	40	M18x1.5	47.5 to 50	130	20	8	17	15
ø80	36	32	34	M12	22	11	Rc1/2	0	34	53	43	100	49	50	M22x1.5	56 to 59	144	25	11	22	17
ø100	45	41	43	M12	22	11	Rc1/2	0	36	53	51	118	58.5	59	M26x1.5	66 to 69	156	30	13	27	18

Code / Bore size (mm)					Mounting method					With switch									
	QB	T	V	WF	FA	FC	FD	FJ	FT	O	P	T0, T5 T2, T3		T2Y T3Y, T2J		T8		T2W, T3W	
												RD	HD	RD	HD	RD	HD	RD	HD
ø40	26	8	18.5	33.5	180.5	40.5	9	158.5	4.5	66	41.5	11	15.5	10	14.5	5	9.5	13	17.5
ø50	27	11	20.5	37	196.5	48	9	168.5	4.5	73	43	13	18	12	17	7	12	15	20
ø63	28	11	21	35	197.5	59	9	169.5	4.5	85	47	13	19	12	18	7	13	15	21
ø80	27	13	23.5	48	234	74	14	198	6	105	57	14.5	23.5	13.5	22.5	8.5	17.5	16.5	25.5
ø100	27	16	32	53	260	90	14	215	6	121	63	18.5	29.5	17.5	28.5	12.5	23.5	20.5	31.5

*1: Refer to page 615 for dimensions of projecting section of T1 and T2YD switch.
*2: For the dimensions of the accessories, refer to pages 470 and 471.

Dimensions

● Head side special flange (FC) with rod side position locking

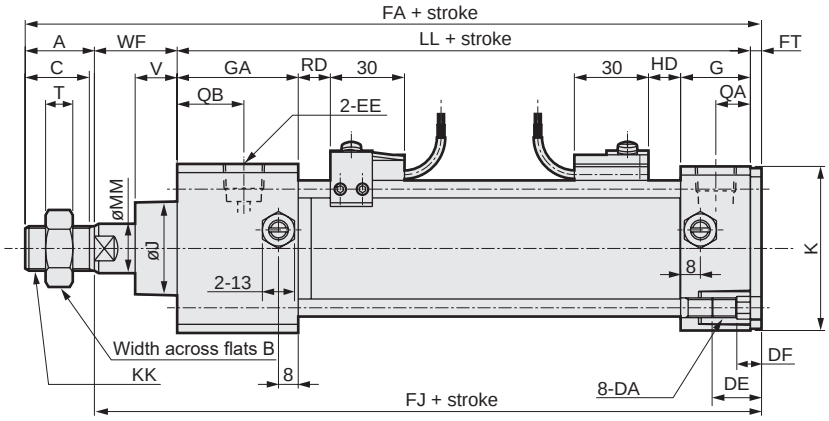

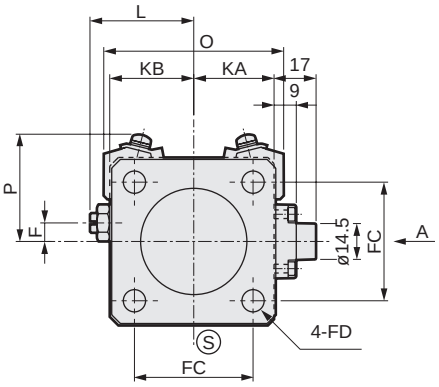

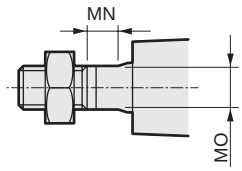

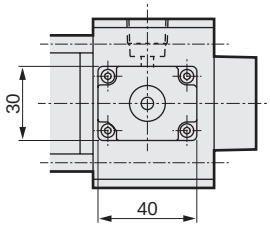

A arrow view

Code	Head side special flange (FC) (unit: mm)																				
Bore size (mm)	A	B	C	DA	DE	DF	EE	F	G	GA	J	K	KA	KB	KK	L	LL	MM	MN	MO	QA
ø40	22	22	20	M8	19	10	Rc1/4	7.5	26	49	31	60	30	30	M14x1.5	38 to 39.5	120.5	16	8	14	13
ø50	28	27	26	M8	20	10	Rc3/8	0	28	49	38	68	32.5	34	M18x1.5	41 to 43.5	127	20	8	17	14
ø63	28	27	26	M8	20	10	Rc3/8	0	30	49	38	80	38	40	M18x1.5	47.5 to 50	130	20	8	17	15
ø80	36	32	34	M12	22	11	Rc1/2	0	34	53	43	100	49	50	M22x1.5	56 to 59	144	25	11	22	17
ø100	45	41	43	M12	22	11	Rc1/2	0	36	53	51	118	58.5	59	M26x1.5	66 to 69	156	30	13	27	18

Code					Mounting method					With switch									
Bore size (mm)	QB	T	V	WF	FA	FC	FD	FJ	FT	O	P	T0, T5 T2, T3		T2Y T3Y, T2J		T8		T2W, T3W	
												RD	HD	RD	HD	RD	HD	RD	HD
ø40	26	8	18.5	33.5	180.5	40	9	158.5	4.5	66	41.5	15.5	11	14.5	10	9.5	5	17.5	13
ø50	27	11	17	33.5	193	47	9	165	4.5	73	43	18	13	17	12	12	7	20	15
ø63	28	11	17	31	193.5	60	11	165.5	4.5	85	47	19	13	18	12	13	7	21	15
ø80	27	13	18.5	43	229	74	14	193	6	105	57	23.5	14.5	22.5	13.5	17.5	8.5	25.5	16.5
ø100	27	16	29	50	257	88	14	212	6	121	63	29.5	18.5	28.5	17.5	23.5	12.5	31.5	20.5

*1: Refer to page 615 for dimensions of projecting section of T1 and T2YD switch.
*2: For the dimensions of the accessories, refer to pages 470 and 471.

Dimensions

● Eye bracket (CA) with head side position locking

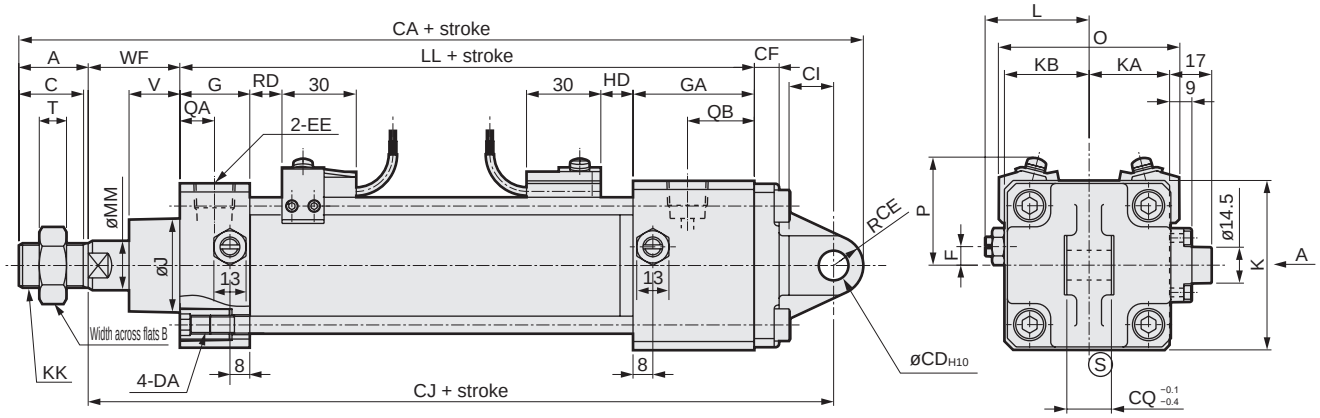

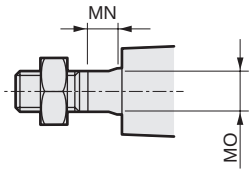

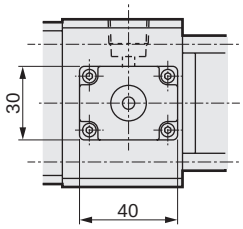

A arrow view

Code	Eye bracket (CA) (unit: mm)																				
Bore size (mm)	A	B	C	DA	EE	F	G	GA	J	K	KA	KB	KK	L	LL	MM	MN	MO	QA	QB	T
ø40	22	22	20	M8	Rc1/4	7.5	26	49	31	60	30	30	M14x1.5	38 to 39.5	120.5	16	8	14	13	26	8
ø50	28	27	26	M8	Rc3/8	0	28	49	38	68	32.5	34	M18x1.5	41 to 43.5	127	20	8	17	14	27	11
ø63	28	27	26	M8	Rc3/8	0	30	49	38	80	38	40	M18x1.5	47.5 to 50	130	20	8	17	15	28	11
ø80	36	32	34	M12	Rc1/2	0	34	53	43	100	49	50	M22x1.5	56 to 59	144	25	11	22	17	27	13
ø100	45	41	43	M12	Rc1/2	0	36	53	51	118	58.5	59	M26x1.5	66 to 69	156	30	13	27	18	27	16

Code			Mounting method							With switch									
Bore size (mm)	V	WF	CA	CD	CE	CF	CI	CJ	CQ	O	P	T0, T5 T2, T3		T2Y T3Y, T2J		T8		T2W, T3W	
												RD	HD	RD	HD	RD	HD	RD	HD
ø40	18.5	33.5	220	12	12	10	18	186	18	66	41.5	11	15.5	10	14.5	5	9.5	13	17.5
ø50	20.5	37	236	12	12	10	18	196	18	73	43	13	18	12	17	7	12	15	20
ø63	21	35	246	14	16	10	24	202	20	85	47	13	19	12	18	7	13	15	21
ø80	23.5	48	300	20	20	14	30	244	28	105	57	14.5	23.5	13.5	22.5	8.5	17.5	16.5	25.5
ø100	32	53	326	20	20	16	30	261	28	121	63	18.5	29.5	17.5	28.5	12.5	23.5	20.5	31.5

*1: Refer to page 615 for dimensions of projecting section of T1 and T2YD switch.
*2: For the dimensions of the accessories, refer to pages 470 and 471.

Dimensions

● Eye bracket (CA) with rod side position locking

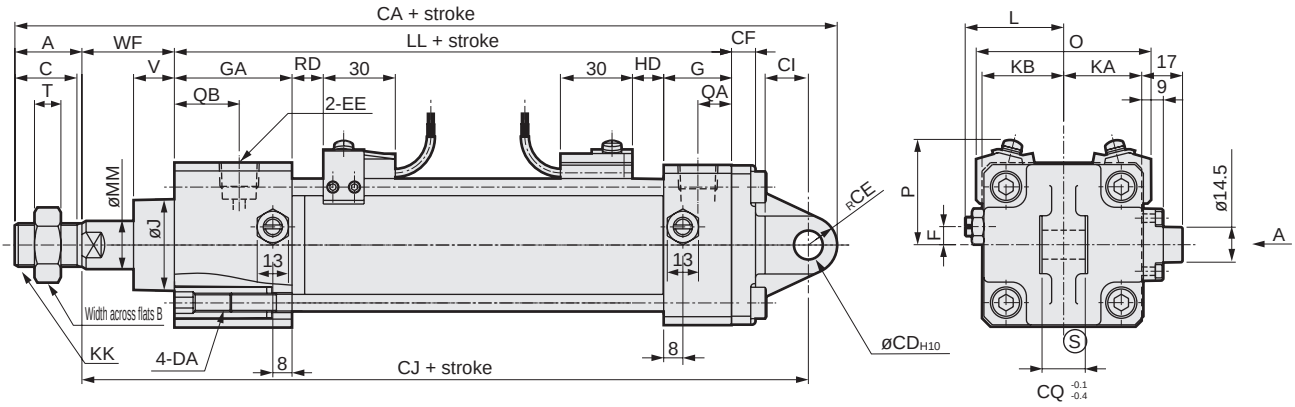

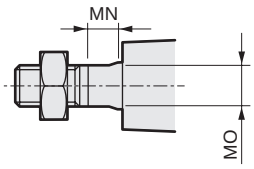

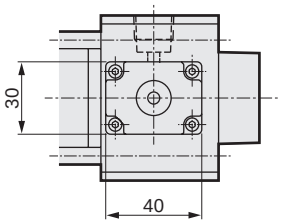

A arrow view

Code	Eye bracket (CA) (unit: mm)																				
Bore size (mm)	A	B	C	DA	EE	F	G	GA	J	K	KA	KB	KK	L	LL	MM	MN	MO	QA	QB	T
ø40	22	22	20	M8	Rc1/4	7.5	26	49	31	60	30	30	M14x1.5	38 to 39.5	120.5	16	8	14	13	26	8
ø50	28	27	26	M8	Rc3/8	0	28	49	38	68	32.5	34	M18x1.5	41 to 43.5	127	20	8	17	14	27	11
ø63	28	27	26	M8	Rc3/8	0	30	49	38	80	38	40	M18x1.5	47.5 to 50	130	20	8	17	15	28	11
ø80	36	32	34	M12	Rc1/2	0	34	53	43	100	49	50	M22x1.5	56 to 59	144	25	11	22	17	27	13
ø100	45	41	43	M12	Rc1/2	0	36	53	51	118	58.5	59	M26x1.5	66 to 69	156	30	13	27	18	27	16

Code			Mounting method							With switch									
Bore size (mm)	V	WF	CA	CD	CE	CF	CI	CJ	CQ	O	P	T0, T5 T2, T3		T2Y T3Y, T2J		T8		T2W, T3W	
												RD	HD	RD	HD	RD	HD	RD	HD
ø40	18.5	33.5	220	12	12	10	18	186	18	66	41.5	15.5	11	14.5	10	9.5	5	17.5	13
ø50	17	33.5	232.5	12	12	10	18	192.5	18	73	43	18	13	17	12	12	7	20	15
ø63	17	31	242	14	16	10	24	198	20	85	47	19	13	18	12	13	7	21	15
ø80	18.5	43	295	20	20	14	30	239	28	105	57	23.5	14.5	22.5	13.5	17.5	8.5	25.5	16.5
ø100	29	50	323	20	20	16	30	258	28	121	63	29.5	18.5	28.5	17.5	23.5	12.5	31.5	20.5

*1: Refer to page 615 for dimensions of projecting section of T1 and T2YD switch.
*2: For the dimensions of the accessories, refer to pages 470 and 471.

SCP*3
CMK2
CMA2
SCM
SCG
SCA2
SCS2
CKV2
CAV2/ COVP/N2
SSD2
SSG
SSD
CAT
MDC2
MVC
SMG
MSD/ MSDG
FC*
STK
SRL3
SRG3
SRM3
SRT3
MRL2
MRG2
SM-25
ShkAbs
FJ
FK
Spd Contr
Ending

Dimensions

● Clevis bracket (CB) with head side position locking

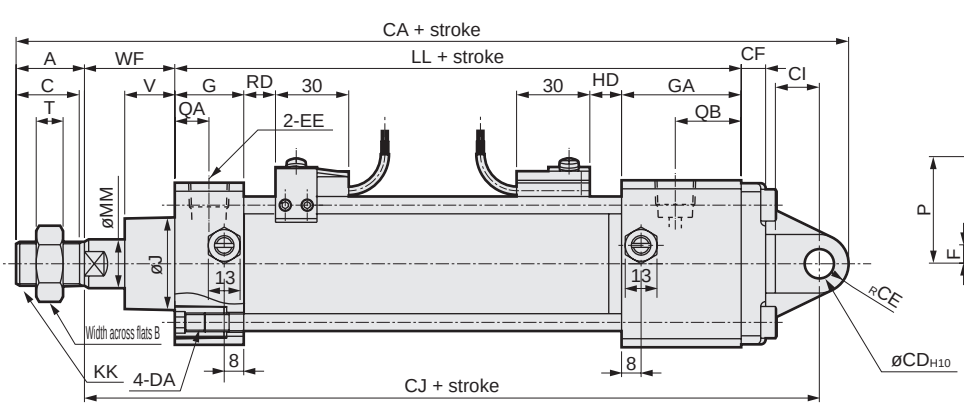

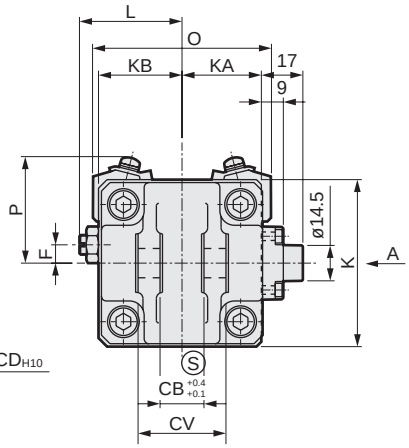

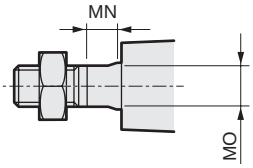

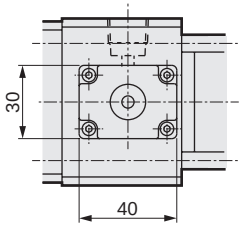

A arrow view

Code / Bore size (mm)	Clevis bracket (CB) (unit: mm)																				
	A	B	C	DA	EE	F	G	GA	J	K	KA	KB	KK	L	LL	MM	MN	MO	QA	QB	T
ø40	22	22	20	M8	Rc1/4	7.5	26	49	31	60	30	30	M14x1.5	38 to 39.5	120.5	16	8	14	13	26	8
ø50	28	27	26	M8	Rc3/8	0	28	49	38	68	32.5	34	M18x1.5	41 to 43.5	127	20	8	17	14	27	11
ø63	28	27	26	M8	Rc3/8	0	30	49	38	80	38	40	M18x1.5	47.5 to 50	130	20	8	17	15	28	11
ø80	36	32	34	M12	Rc1/2	0	34	53	43	100	49	50	M22x1.5	56 to 59	144	25	11	22	17	27	13
ø100	45	41	43	M12	Rc1/2	0	36	53	51	118	58.5	59	M26x1.5	66 to 69	156	30	13	27	18	27	16

Code / Bore size (mm)			Mounting method								With switch									
	V	WF	CA	CB	CD	CE	CF	CI	CJ	CV	O	P	T0, T5 T2, T3		T2Y T3Y, T2J		T8		T2W, T3W	
													RD	HD	RD	HD	RD	HD	RD	HD
ø40	18.5	33.5	220	18	12	12	10	18	186	36	66	41.5	11	15.5	10	14.5	5	9.5	13	17.5
ø50	20.5	37	236	18	12	12	10	18	196	36	73	43	13	18	12	17	7	12	15	20
ø63	21	35	246	20	14	16	10	24	202	40	85	47	13	19	12	18	7	13	15	21
ø80	23.5	48	300	28	20	20	14	30	244	56	105	57	14.5	23.5	13.5	22.5	8.5	17.5	16.5	25.5
ø100	32	53	326	28	20	20	16	30	261	56	121	63	18.5	29.5	17.5	28.5	12.5	23.5	20.5	31.5

*1: Refer to page 615 for dimensions of projecting section of T1 and T2YD switch.
*2: For the dimensions of the accessories, refer to pages 470 and 471.

Dimensions

● Clevis bracket (CB) with rod side position locking

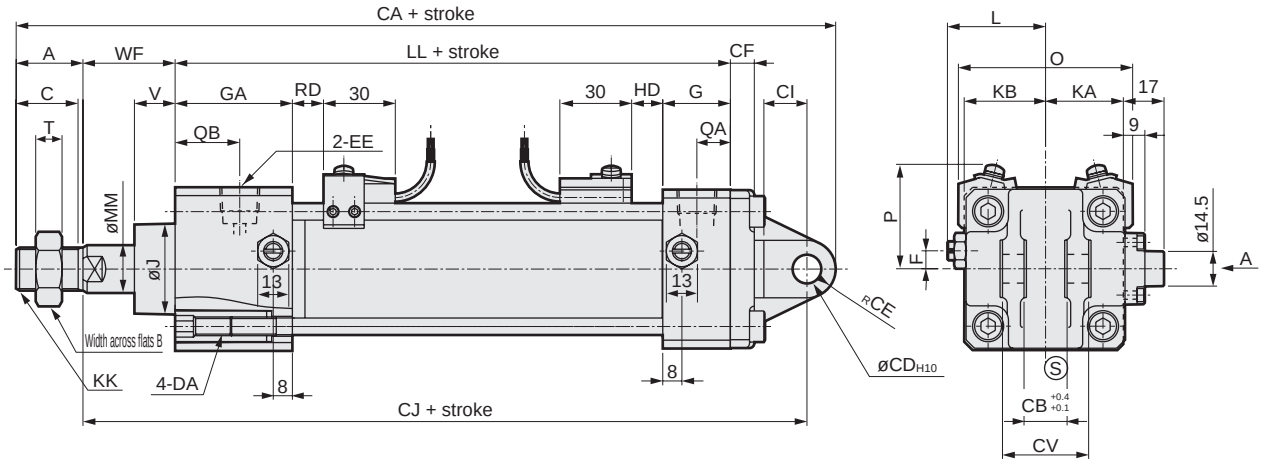

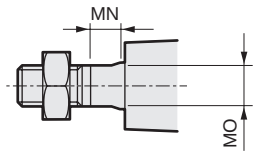

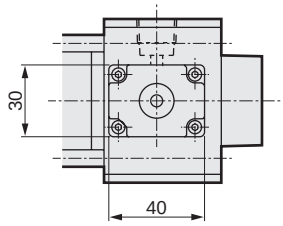

A arrow view

Code	Clevis bracket (CB) (unit: mm)																				
Bore size (mm)	A	B	C	DA	EE	F	G	GA	J	K	KA	KB	KK	L	LL	MM	MN	MO	QA	QB	T
ø40	22	22	20	M8	Rc1/4	7.5	26	49	31	60	30	30	M14x1.5	38 to 39.5	120.5	16	8	14	13	26	8
ø50	28	27	26	M8	Rc3/8	0	28	49	38	68	32.5	34	M18x1.5	41 to 43.5	127	20	8	17	14	27	11
ø63	28	27	26	M8	Rc3/8	0	30	49	38	80	38	40	M18x1.5	47.5 to 50	130	20	8	17	15	28	11
ø80	36	32	34	M12	Rc1/2	0	34	53	43	100	49	50	M22x1.5	56 to 59	144	25	11	22	17	27	13
ø100	45	41	43	M12	Rc1/2	0	36	53	51	118	58.5	59	M26x1.5	66 to 69	156	30	13	27	18	27	16

Code			Mounting method								With switch									
Bore size (mm)	V	WF	CA	CB	CD	CE	CF	CI	CJ	CV	O	P	T0, T5 T2, T3		T2Y T3Y, T2J		T8		T2W, T3W	
													RD	HD	RD	HD	RD	HD	RD	HD
ø40	18.5	33.5	220	18	12	12	10	18	186	36	66	41.5	15.5	11	14.5	10	9.5	5	17.5	13
ø50	17	33.5	232.5	18	12	12	10	18	192.5	36	73	43	18	13	17	12	12	7	20	15
ø63	17	31	242	20	14	16	10	24	198	40	85	47	19	13	18	12	13	7	21	15
ø80	18.5	43	295	28	20	20	14	30	239	56	105	57	23.5	14.5	22.5	13.5	17.5	8.5	25.5	16.5
ø100	29	50	323	28	20	20	16	30	258	56	121	63	29.5	18.5	28.5	17.5	23.5	12.5	31.5	20.5

*1: Refer to page 615 for dimensions of projecting section of T1 and T2YD switch.
*2: For the dimensions of the accessories, refer to pages 470 and 471.

SCP*3
CMK2
CMA2
SCM
SCG
SCA2
SCS2
CKV2
CAV2/ COVP/N2
SSD2
SSG
SSD
CAT
MDC2
MVC
SMG
MSD/ MSDG
FC*
STK
SRL3
SRG3
SRM3
SRT3
MRL2
MRG2
SM-25
ShkAbs
FJ
FK
Spd Contr
Ending

Dimensions

● Intermediate trunnion (TC) with head side position locking

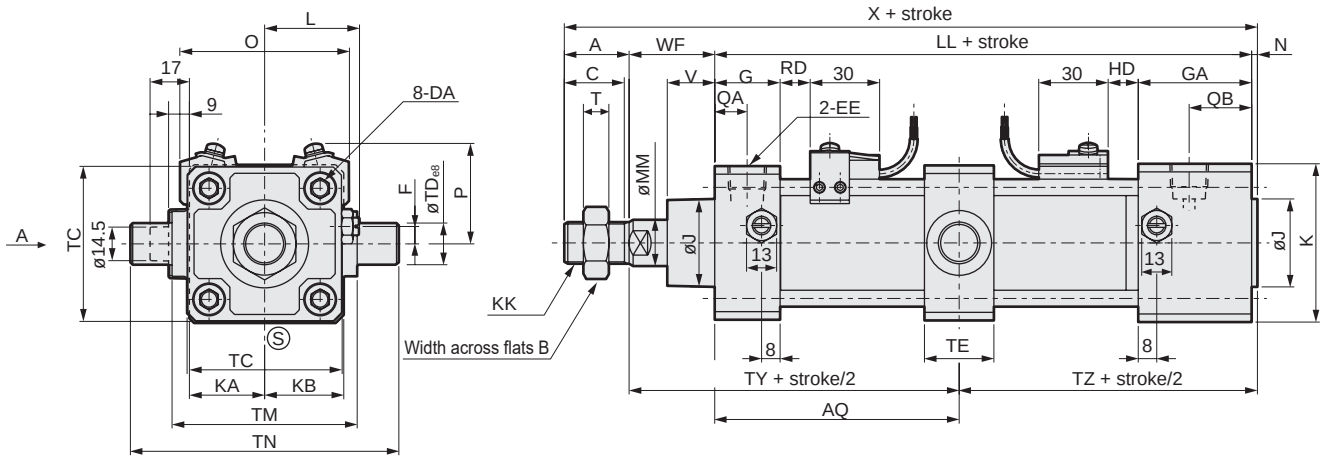

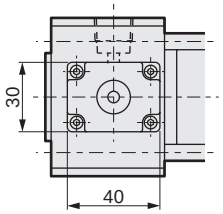

A arrow view

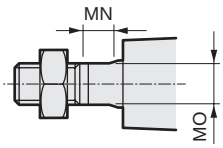

Code / Bore size (mm)	Intermediate trunnion (TC) (unit: mm)																			
	A	B	C	DA	EE	F	G	GA	J	K	KA	KB	KK	L	LL	MM	MN	MO	N	QA	QB
ø40	22	22	20	M8	Rc1/4	7.5	26	49	31	60	30	30	M14x1.5	38 to 39.5	120.5	16	8	14	2	13	26
ø50	28	27	26	M8	Rc3/8	0	28	49	38	68	32.5	34	M18x1.5	41 to 43.5	127	20	8	17	2.5	14	27
ø63	28	27	26	M8	Rc3/8	0	30	49	38	80	38	40	M18x1.5	47.5 to 50	130	20	8	17	3	15	28
ø80	36	32	34	M12	Rc1/2	0	34	53	43	100	49	50	M22x1.5	56 to 59	144	25	11	22	3.5	17	27
ø100	45	41	43	M12	Rc1/2	0	36	53	51	118	58.5	59	M26x1.5	66 to 69	156	30	13	27	4	18	27

Code / Bore size (mm)					Mounting method								With switch									
	T	V	WF	X	AQ	TC	TD	TE	TM	TN	TY	TZ	O	P	T0, T5 T2, T3		T2Y T3Y, T2J		T8		T2W, T3W	
															RD	HD	RD	HD	RD	HD	RD	HD
ø40	8	18.5	33.5	178	$60.5 + \frac{Stroke}{2}$	57	16	30	63	95	94	62	66	41.5	11	15.5	10	14.5	5	9.5	13	17.5
ø50	11	20.5	37	194.5	$80 + \frac{Stroke}{2}$	67	18	30	80	116	100.5	66	73	43	13	18	12	17	7	12	15	20
ø63	11	21	35	196	$65 + \frac{Stroke}{2}$	82	20	35	90	130	100	68	85	47	13	19	12	18	7	13	15	21
ø80	13	23.5	48	231.5	$72 + \frac{Stroke}{2}$	100	25	40	115	165	120	75.5	105	57	14.5	23.5	13.5	22.5	8.5	17.5	16.5	25.5
ø100	16	32	53	258	$78 + \frac{Stroke}{2}$	121	35	50	135	205	131	82	121	63	18.5	29.5	17.5	28.5	12.5	23.5	20.5	31.5

*1: Refer to page 615 for dimensions of projecting section of T1 and T2YD switch.
*2: For the dimensions of the accessories, refer to pages 470 and 471.

Dimensions

● Intermediate trunnion (TC) with rod side position locking

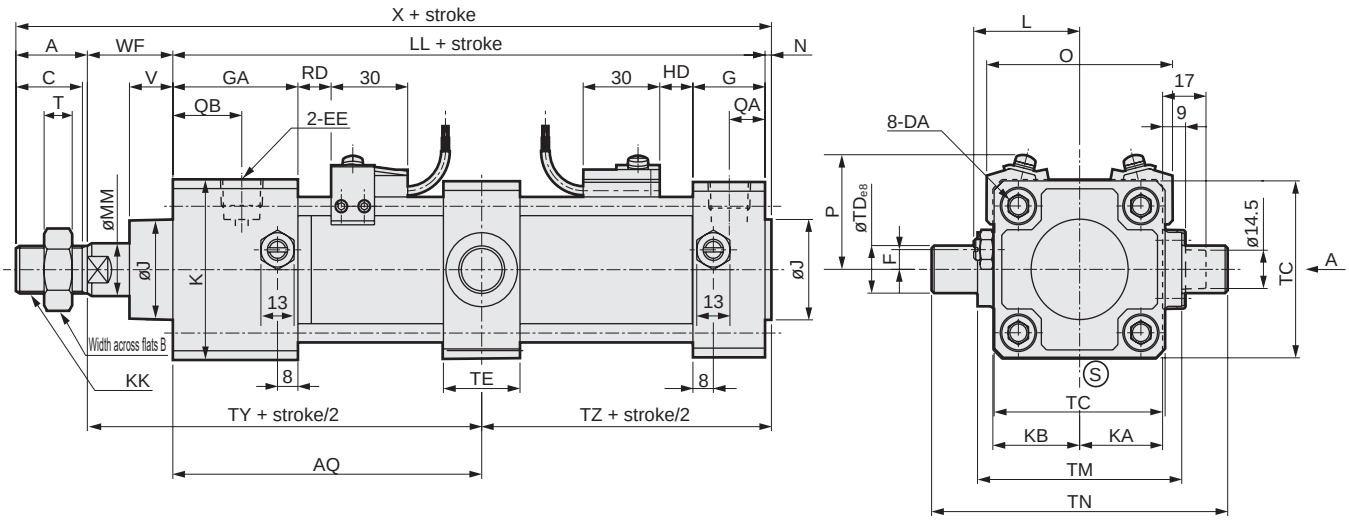

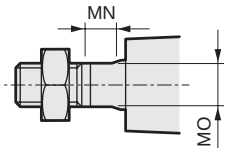

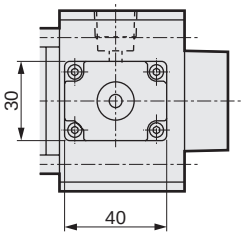

A arrow view

Code	Intermediate trunnion (TC) (unit: mm)																				
Bore size (mm)	A	B	C	DA	EE	F	G	GA	J	K	KA	KB	KK	L	LL	MM	MN	MO	N	QA	QB
ø40	22	22	20	M8	Rc1/4	7.5	26	49	31	60	30	30	M14x1.5	38 to 39.5	120.5	16	8	14	2	13	26
ø50	28	27	26	M8	Rc3/8	0	28	49	38	68	32.5	34	M18x1.5	41 to 43.5	127	20	8	17	2.5	14	27
ø63	28	27	26	M8	Rc3/8	0	30	49	38	80	38	40	M18x1.5	47.5 to 50	130	20	8	17	3	15	28
ø80	36	32	34	M12	Rc1/2	0	34	53	43	100	49	50	M22x1.5	56 to 59	144	25	11	22	3.5	17	27
ø100	45	41	43	M12	Rc1/2	0	36	53	51	118	58.5	59	M26x1.5	66 to 69	156	30	13	27	4	18	27

Code					Mounting method								With switch									
Bore size (mm)	T	V	WF	X	AQ	TC	TD	TE	TM	TN	TY	TZ	O	P	T0, T5 T2, T3		T2Y T3Y, T2J		T8		T2W, T3W	
															RD	HD	RD	HD	RD	HD	RD	HD
ø40	8	18.5	33.5	178	$60.5+\frac{Stroke}{2}$	57	16	30	63	95	94	62	66	41.5	15.5	11	14.5	10	9.5	5	17.5	13
ø50	11	17	33.5	191	$63.5+\frac{Stroke}{2}$	67	18	30	80	116	97	66	73	43	18	13	17	12	12	7	20	15
ø63	11	17	31	192	$65+\frac{Stroke}{2}$	82	20	35	90	130	96	68	85	47	19	13	18	12	13	7	21	15
ø80	13	18.5	43	226.5	$72+\frac{Stroke}{2}$	100	25	40	115	165	115	75.5	105	57	23.5	14.5	22.5	13.5	17.5	8.5	25.5	16.5
ø100	16	29	50	255	$78+\frac{Stroke}{2}$	121	35	50	135	205	128	82	121	63	29.5	18.5	28.5	17.5	23.5	12.5	31.5	20.5

*1: Refer to page 615 for dimensions of projecting section of T1 and T2YD switch.
*2: For the dimensions of the accessories, refer to pages 470 and 471.

SCP*3
CMK2
CMA2
SCM
SCG
SCA2
SCS2
CKV2
CAV2/ COVP/N2
SSD2
SSG
SSD
CAT
MDC2
MVC
SMG
MSD/ MSDG
FC*
STK
SRL3
SRG3
SRM3
SRT3
MRL2
MRG2
SM-25
ShkAbs
FJ
FK
Spd Contr
Ending

Dimensions

● Rod side trunnion (TA) with head side position locking

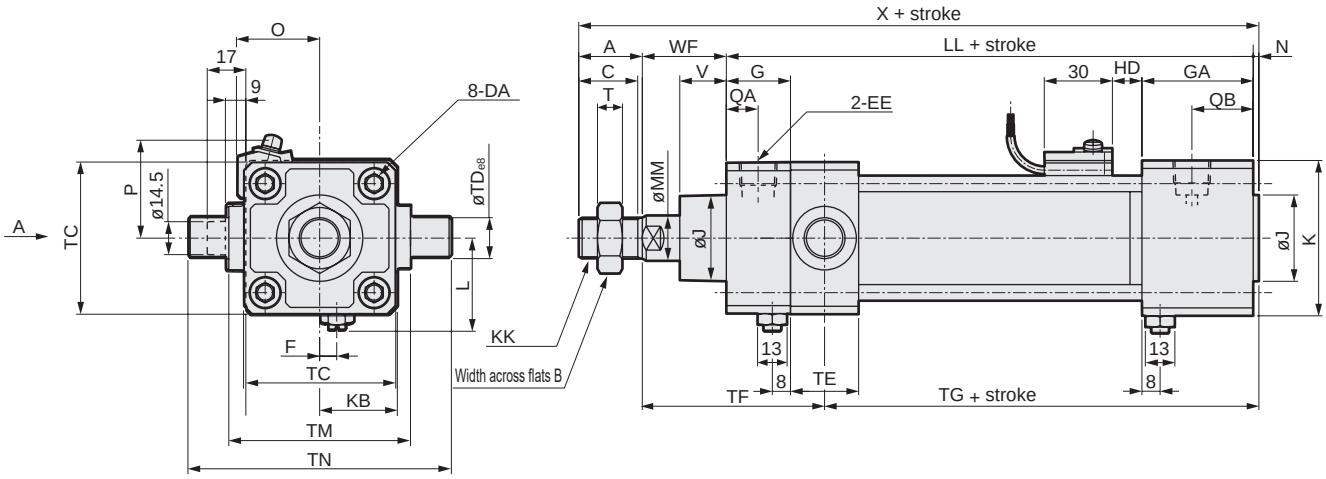

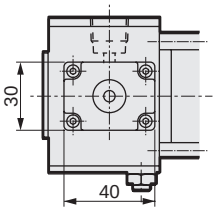

A arrow view

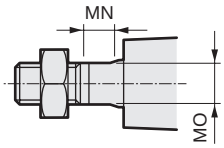

Code / Bore size (mm)	Rod side trunnion (TA) (unit: mm)																				
	A	B	C	DA	EE	F	G	GA	J	K	KA	KB	KK	L	LL	MM	MN	MO	N	QA	QB
ø40	22	22	20	M8	Rc1/4	7.5	26	49	31	60	30	30	M14x1.5	38 to 39.5	120.5	16	8	14	2	13	26
ø50	28	27	26	M8	Rc3/8	0	28	49	38	68	32.5	34	M18x1.5	41 to 43.5	127	20	8	17	2.5	14	27
ø63	28	27	26	M8	Rc3/8	0	30	49	38	80	38	40	M18x1.5	47.5 to 50	130	20	8	17	3	15	28
ø80	36	32	34	M12	Rc1/2	0	34	53	43	100	49	50	M22x1.5	56 to 59	144	25	11	22	3.5	17	27
ø100	45	41	43	M12	Rc1/2	0	36	53	51	118	58.5	59	M26x1.5	66 to 69	156	30	13	27	4	18	27

Code / Bore size (mm)					Mounting method							With switch					
														HD			
	T	V	WF	X	TC	TD	TE	TF	TG	TM	TN	O	P	T0, T5 T2, T3	T2Y T3Y, T2J	T8	T2W, T3W
ø40	8	18.5	33.5	178	57	16	30	74.5	81.5	63	95	66	41.5	15.5	14.5	9.5	17.5
ø50	11	20.5	37	194.5	67	18	30	80	86.5	80	116	73	43	18	17	12	20
ø63	11	21	35	196	82	20	35	82.5	85.5	90	130	85	47	19	18	13	21
ø80	13	23.5	48	231.5	100	25	40	102	93.5	115	165	105	57	23.5	22.5	17.5	25.5
ø100	16	32	53	258	121	35	50	114	99	135	205	121	63	29.5	28.5	23.5	31.5

*1 : Refer to page 615 for dimensions of projecting section of T1 and T2YD switch.
*2 : For the dimensions of the accessories, refer to pages 470 and 471.
*3 : The position of the cushion needle cannot be changed.

Dimensions

● Head side trunnion (TB) with rod side position locking

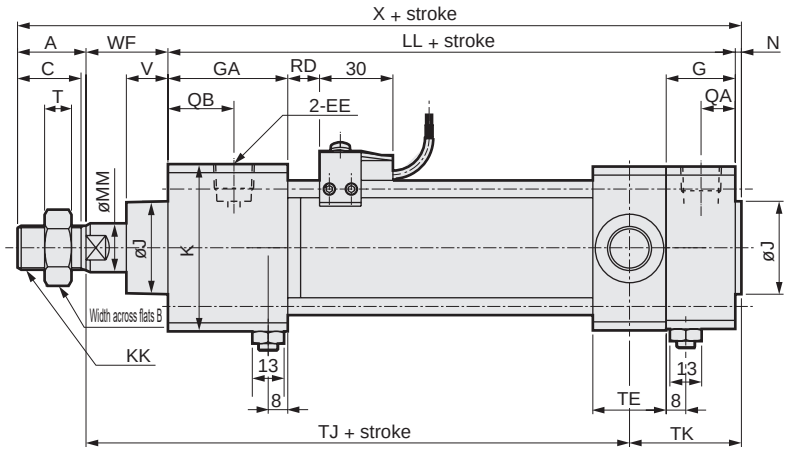

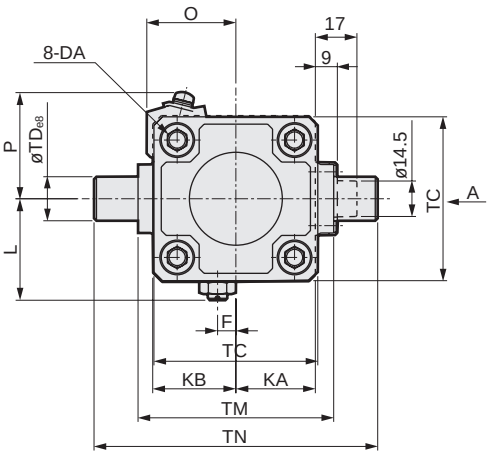

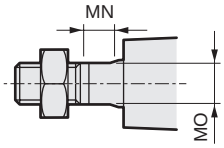

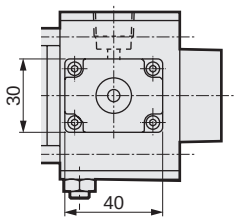

A arrow view

Code	Head side trunnion (TB) (unit: mm)																				
Bore size (mm)	A	B	C	DA	EE	F	G	GA	J	K	KA	KB	KK	L	LL	MM	MN	MO	N	QA	QB
ø40	22	22	20	M8	Rc1/4	7.5	26	49	31	60	30	30	M14x1.5	38 to 39.5	120.5	16	8	14	2	13	26
ø50	28	27	26	M8	Rc3/8	0	28	49	38	68	32.5	34	M18x1.5	41 to 43.5	127	20	8	17	2.5	14	27
ø63	28	27	26	M8	Rc3/8	0	30	49	38	80	38	40	M18x1.5	47.5 to 50	130	20	8	17	3	15	28
ø80	36	32	34	M12	Rc1/2	0	34	53	43	100	49	50	M22x1.5	56 to 59	144	25	11	22	3.5	17	27
ø100	45	41	43	M12	Rc1/2	0	36	53	51	118	58.5	59	M26x1.5	66 to 69	156	30	13	27	4	18	27

Code					Mounting method							With switch					
														RD			
Bore size (mm)	T	V	WF	X	TC	TD	TE	TJ	TK	TM	TN	O	P	T0, T5 T2, T3	T2Y T3Y, T2J	T8	T2W, T3W
ø40	8	18.5	33.5	178	57	16	30	112.5	43.5	63	95	66	41.5	15.5	14.5	9.5	17.5
ø50	11	17	33.5	191	67	18	30	117	46	80	116	73	43	18	17	12	20
ø63	11	17	31	192	82	20	35	113	51	90	130	85	47	19	18	13	21
ø80	13	18.5	43	226.5	100	25	40	132.5	58	115	165	105	57	23.5	22.5	17.5	25.5
ø100	16	29	50	256	121	35	50	144.5	65.5	135	205	121	63	29.5	28.5	23.5	31.5

*1 : Refer to page 615 for dimensions of projecting section of T1 and T2YD switch.
*2 : For the dimensions of the accessories, refer to pages 470 and 471.
*3 : The position of the cushion needle cannot be changed.

SCP*3
CMK2
CMA2
SCM
SCG
SCA2
SCS2
CKV2
CAV2/ COVP/N2
SSD2
SSG
SSD
CAT
MDC2
MVC
SMG
MSD/ MSDG
FC*
STK
SRL3
SRG3
SRM3
SRT3
MRL2
MRG2
SM-25
ShkAbs
FJ
FK
Spd Contr
Ending

Dimensions

● Intermediate supporting hole trunnion (TF) with head side position locking

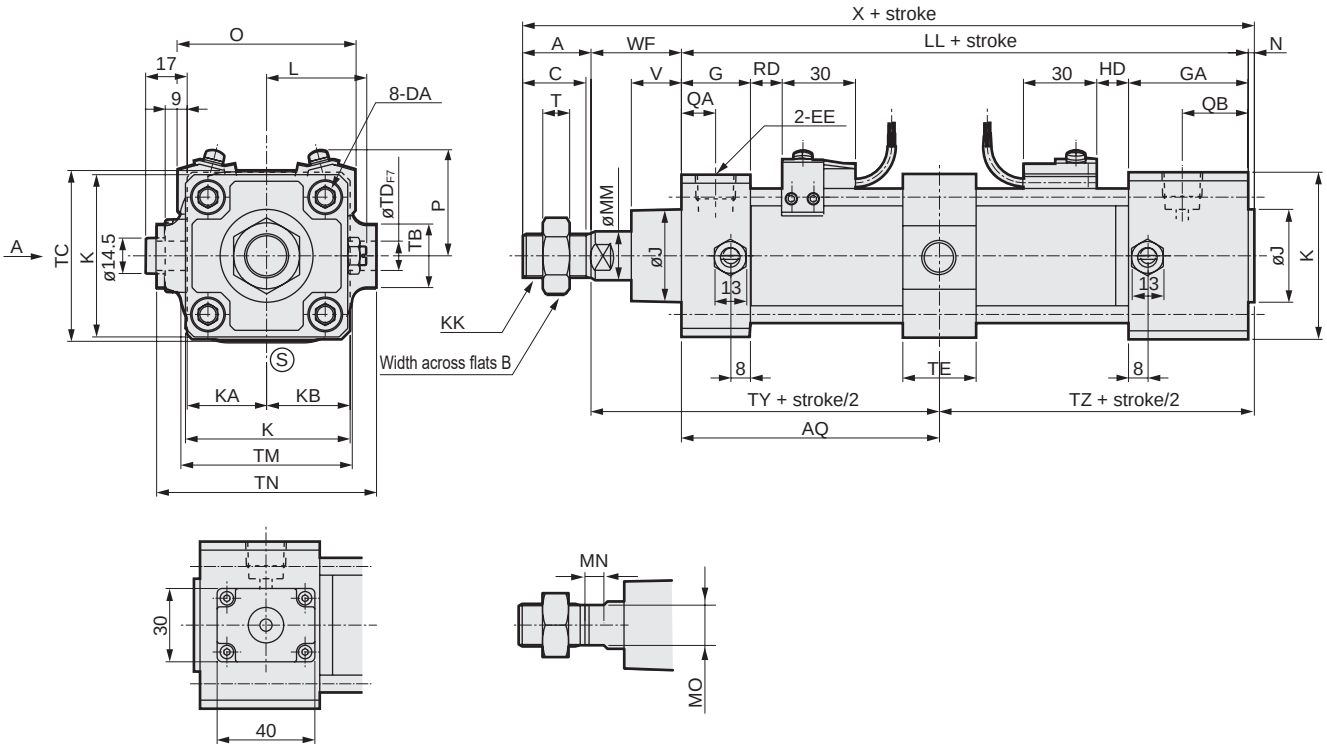

A arrow view

Code	Intermediate supporting hole trunnion (TF) (unit: mm)																			
Bore size (mm)	A	B	C	DA	EE	G	GA	J	K	KA	KB	KK	L	LL	MM	MN	MO	N	QA	QB
ø50	28	27	26	M8	Rc3/8	28	49	38	68	32.5	34	M18x1.5	41 to 43.5	127	20	8	17	2.5	14	27
ø63	28	27	26	M8	Rc3/8	30	49	38	80	38	40	M18x1.5	47.5 to 50	130	20	8	17	3	15	28
ø80	36	32	34	M12	Rc1/2	34	53	43	100	49	50	M22x1.5	56 to 59	144	25	11	22	3.5	17	27
ø100	45	41	43	M12	Rc1/2	36	53	51	118	58.5	59	M26x1.5	66 to 69	156	30	13	27	4	18	27

Code					Mounting method									With switch									
Bore size (mm)	T	V	WF	X	AQ	TB	TC	TD	TE	TM	TN	TY	TZ	O	P	T0, T5 T2, T3		T2Y T3Y, T2J		T8		T2W, T3W	
																RD	HD	RD	HD	RD	HD	RD	HD
ø50	11	20.5	37	194.5	$63.5+\frac{Stroke}{2}$	26	67	12	30	70	90	97	66	73	43	13	18	12	17	7	12	15	20
ø63	11	21	35	196	$65+\frac{Stroke}{2}$	30	82	14	35	86	104	96	68	85	47	13	19	12	18	7	13	15	21
ø80	13	23.5	48	231.5	$72+\frac{Stroke}{2}$	35	100	20	40	105	134	115	75.5	105	57	14.5	23.5	13.5	22.5	8.5	17.5	16.5	25.5
ø100	16	32	53	258	$78+\frac{Stroke}{2}$	40	121	20	40	127	150	128	82	121	63	18.5	29.5	17.5	28.5	12.5	23.5	20.5	31.5

*1: Refer to page 615 for dimensions of projecting section of T1 and T2YD switch.
*2: For the dimensions of the accessories, refer to pages 470 and 471.

Dimensions

● Intermediate supporting hole trunnion (TF) with rod side position locking

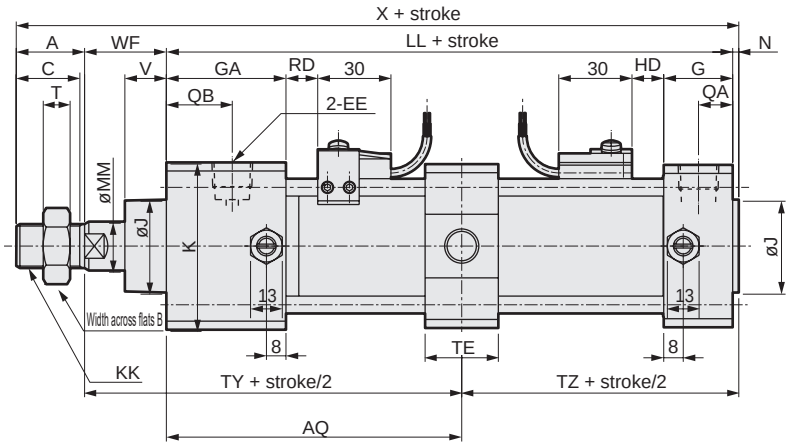

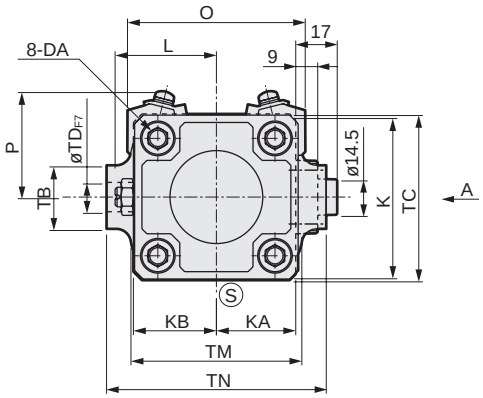

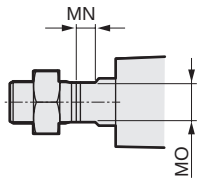

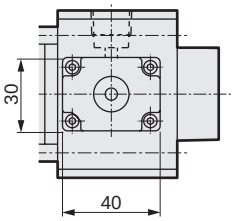

A arrow view

Code	Intermediate supporting hole trunnion (TF) (unit: mm)																			
Bore size (mm)	A	B	C	DA	EE	G	GA	J	K	KA	KB	KK	L	LL	MM	MN	MO	N	QA	QB
ø50	28	27	26	M8	Rc3/8	28	49	38	68	32.5	34	M18x1.5	41 to 43.5	127	20	8	17	2.5	14	27
ø63	28	27	26	M8	Rc3/8	30	49	38	80	38	40	M18x1.5	47.5 to 50	130	20	8	17	3	15	28
ø80	36	32	34	M12	Rc1/2	34	53	43	100	49	50	M22x1.5	56 to 59	144	25	11	22	3.5	17	27
ø100	45	41	43	M12	Rc1/2	36	53	51	118	58.5	59	M26x1.5	66 to 69	156	30	13	27	4	18	27

Code					Mounting method									With switch									
Bore size (mm)	T	V	WF	X	AQ	TB	TC	TD	TE	TM	TN	TY	TZ	O	P	T0, T5 T2, T3		T2Y T3Y, T2J		T8		T2W, T3W	
																RD	HD	RD	HD	RD	HD	RD	HD
ø50	11	17	33.5	191	$63.5 + \frac{Stroke}{2}$	26	67	12	30	70	90	97	66	73	43	18	13	17	12	12	7	20	15
ø63	11	17	31	192	$65 + \frac{Stroke}{2}$	30	82	14	35	86	104	96	68	85	47	19	13	18	12	13	7	21	15
ø80	13	18.5	43	226.5	$72 + \frac{Stroke}{2}$	35	100	20	40	105	134	115	75.5	105	57	23.5	14.5	22.5	13.5	17.5	8.5	25.5	16.5
ø100	16	29	50	255	$78 + \frac{Stroke}{2}$	40	121	20	40	127	150	128	82	121	63	29.5	18.5	28.5	17.5	23.5	12.5	31.5	20.5

*1: Refer to page 615 for dimensions of projecting section of T1 and T2YD switch.
*2: For the dimensions of the accessories, refer to pages 470 and 471.

SCP*3
CMK2
CMA2
SCM
SCG
SCA2
SCS2
CKV2
CAV2/ COVP/N2
SSD2
SSG
SSD
CAT
MDC2
MVC
SMG
MSD/ MSDG
FC*
STK
SRL3
SRG3
SRM3
SRT3
MRL2
MRG2
SM-25
ShkAbs
FJ
FK
Spd Contr
Ending

Dimensions

● Rod side hole trunnion (TD) with head side position locking

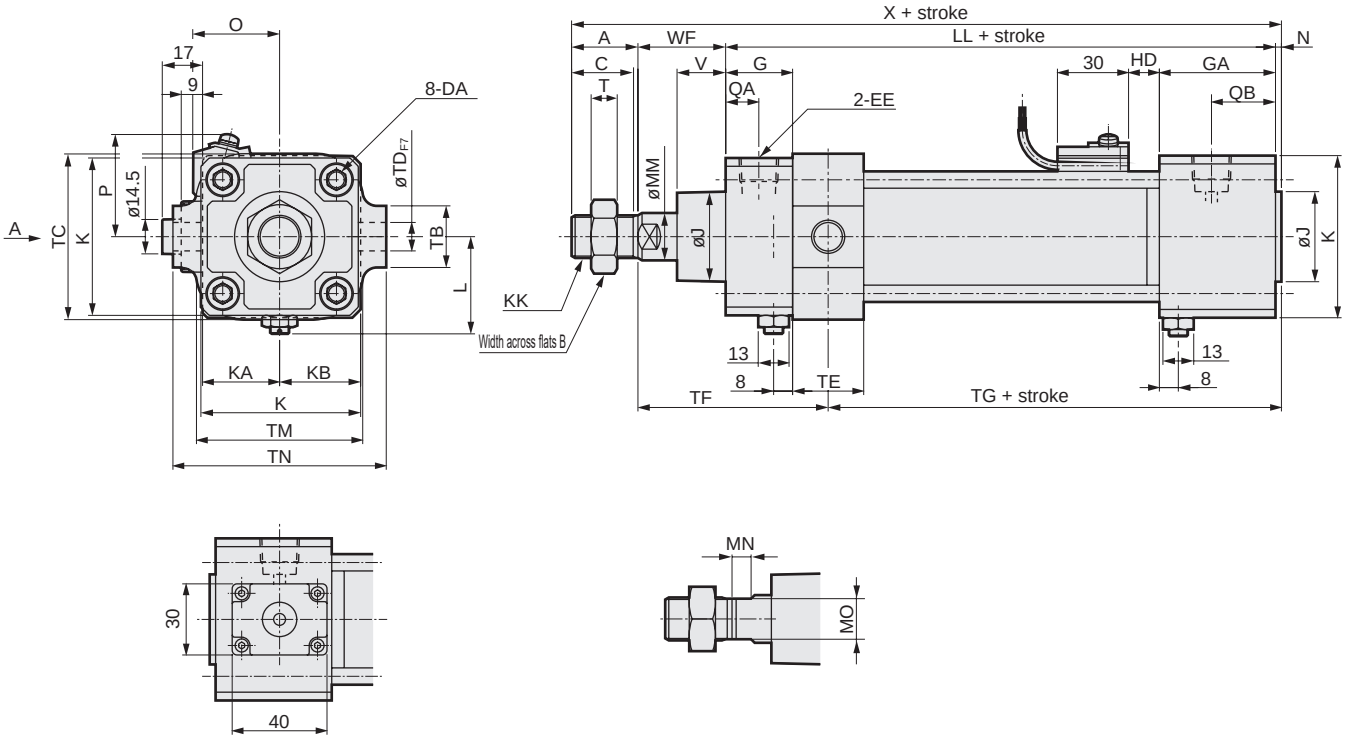

Code / Bore size (mm)	Rod side hole trunnion (TD) (unit: mm)																			
	A	B	C	DA	EE	G	GA	J	K	KA	KB	KK	L	LL	MM	MN	MO	N	QA	QB
ø50	28	27	26	M8	Rc3/8	28	49	38	68	32.5	34	M18x1.5	41 to 43.5	127	20	8	17	2.5	14	27
ø63	28	27	26	M8	Rc3/8	30	49	38	80	38	40	M18x1.5	47.5 to 50	130	20	8	17	3	15	28
ø80	36	32	34	M12	Rc1/2	34	53	43	100	49	50	M22x1.5	56 to 59	144	25	11	22	3.5	17	27
ø100	45	41	43	M12	Rc1/2	36	53	51	118	58.5	59	M26x1.5	66 to 69	156	30	13	27	4	18	27

Code / Bore size (mm)					Mounting method										With switch					
																	HD			
	T	V	WF	X	TB	TC	TD	TE	TF	TG	TJ	TK	TM	TN	O	P	T0, T5 T2, T3	T2Y T3Y, T2J	T8	T2W, T3W
ø50	11	20.5	37	194.5	26	67	12	30	80	86.5	117	46	70	90	73	43	18	17	12	20
ø63	11	21	35	196	30	82	14	35	82.5	85.5	113	51	86	104	85	47	19	18	13	21
ø80	13	23.5	48	231.5	35	100	20	40	102	93.5	132.5	58	105	134	105	57	23.5	22.5	17.5	25.5
ø100	16	32	53	258	40	121	20	40	109	104	144.5	65.5	127	150	121	63	29.5	28.5	23.5	31.5

*1 : Refer to page 615 for dimensions of projecting section of T1 and T2YD switch.
*2 : For the dimensions of the accessories, refer to pages 470 and 471.
*3 : The position of the cushion needle cannot be changed.

Dimensions

● Head side hole trunnion (TE) with rod side position locking

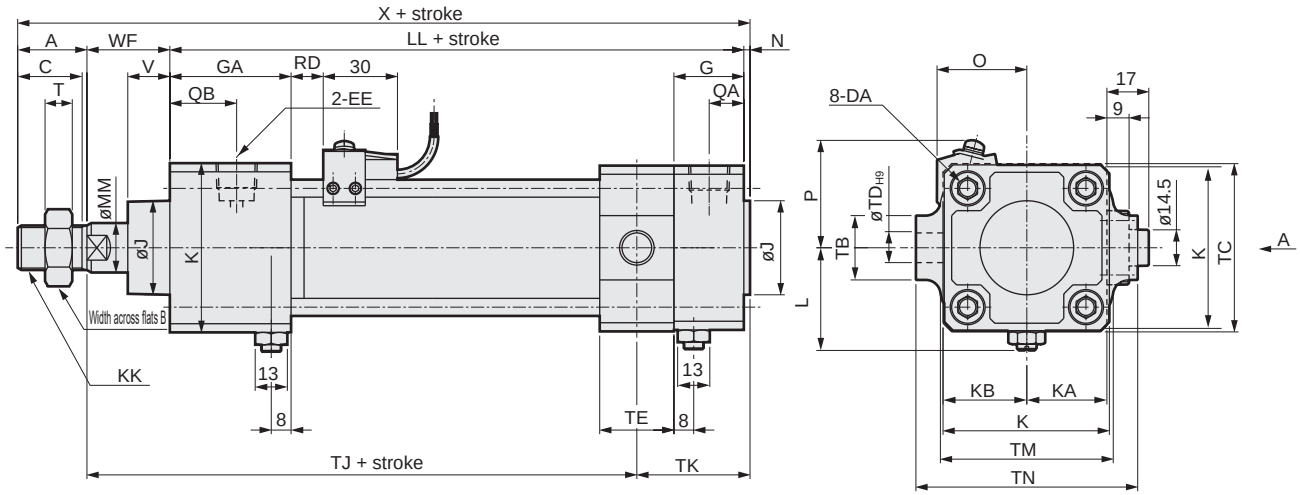

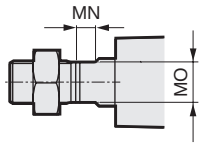

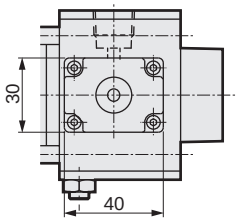

A arrow view

Code	Head side hole trunnion (TE) (unit: mm)																			
Bore size (mm)	A	B	C	DA	EE	G	GA	J	K	KA	KB	KK	L	LL	MM	MN	MO	N	QA	QB
ø50	28	27	26	M8	Rc3/8	28	49	38	68	32.5	34	M18x1.5	41 to 43.5	127	20	8	17	2.5	14	27
ø63	28	27	26	M8	Rc3/8	30	49	38	80	38	40	M18x1.5	47.5 to 50	130	20	8	17	3	15	28
ø80	36	32	34	M12	Rc1/2	34	53	43	100	49	50	M22x1.5	56 to 59	144	25	11	22	3.5	17	27
ø100	45	41	43	M12	Rc1/2	36	53	51	118	58.5	59	M26x1.5	66 to 69	156	30	13	27	4	18	27

Code					Mounting method								With switch					
															RD			
Bore size (mm)	T	V	WF	X	TB	TC	TD	TE	TJ	TK	TM	TN	O	P	T0, T5 T2, T3	T2Y T3Y, T2J	T8	T2W, T3W
ø50	11	17	33.5	191	26	67	12	30	117	46	70	90	73	43	18	17	12	20
ø63	11	17	31	192	30	82	14	35	113	51	86	104	85	47	19	18	13	21
ø80	13	18.5	43	226.5	35	100	20	40	132.5	58	105	134	105	57	23.5	22.5	17.5	25.5
ø100	16	29	50	255	40	121	20	40	149.5	60.5	127	150	121	63	29.5	28.5	23.5	31.5

*1 : Refer to page 615 for dimensions of projecting section of T1 and T2YD switch.
*2 : The position of the cushion needle cannot be changed.

* For the dimensions of the accessories, refer to pages 470 and 471.

Dimensions

● Main dimensions of M0 (non-locking manual override) and M1 (locking manual override)

Dimensions of the manual override are the same in all sizes (ø40 to 100).

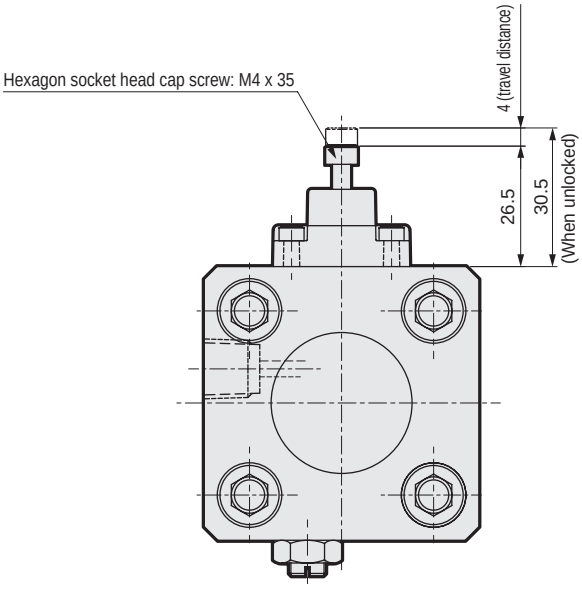

M0 (Non-locking manual override)

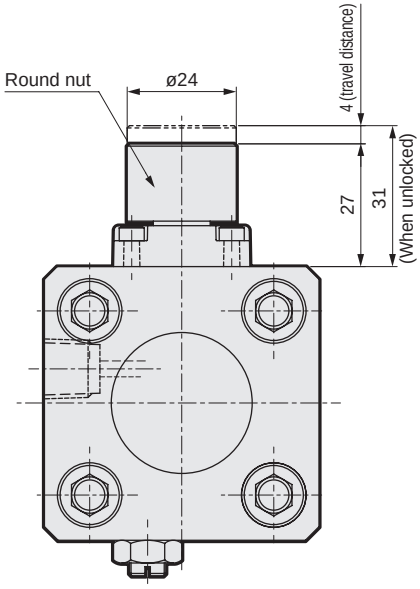

M1 (Locking manual override)

MEMO

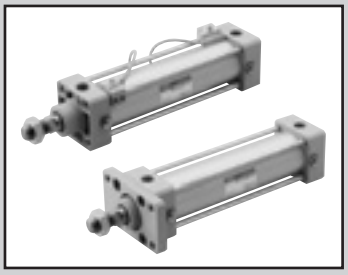

Medium bore size cylinder
Double acting/low friction (low friction at low pressure (0.2 MPa or less))

SCA2-O Series

● Bore size: ø40/ø50/ø63/ø80/ø100

JIS symbol

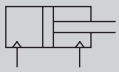

RoHS CAD

Specifications

Item		SCA2-O (Low friction)				
Bore size	mm	ø40	ø50	ø63	ø80	ø100
Actuation		Double acting				
Working fluid		Compressed air				
Max. working pressure	MPa	1.0 (≈150 psi, 10 bar)				
Min. working pressure	MPa	0.01 (≈1.5 psi, 0.1 bar)				
Proof pressure	MPa	1.6 (≈230 psi, 16 bar)				
Ambient temperature	°C	5 (41°F) to 60 (140°F)				
Port size		Rc1/4	Rc3/8		Rc1/2	
Stroke tolerance	mm	$^{+0.9}_{0}$ (to 360) $^{+1.4}_{0}$ (to 800)				
Working piston speed	mm/s	10 to 200 (Operate within the allowable absorbed energy.)				
Cushion		None				
Lubrication		Not available				
Allowable absorbed energy	J	0.067	0.079	0.079	0.201	0.301
		As it has no cushion, this product cannot absorb large energy generated by an external load. We recommend using an external shock absorber.				

Stroke

Bore size (mm)	Standard stroke (mm)	Max. stroke (mm)	Min. stroke (mm)
ø40	25/50/75/100/150/200/250/300/350/400/450/500	600	1
ø50			
ø63			
ø80		700	
ø100		800	

*1:The custom stroke is available in 1 mm increments.

Min. stroke with switch

● T0/T5 min. stroke with switches

	Different surface mounting				Same surface mounting				Center trunnion mounting				Rod side trunnion mounting No position detection at rod side stroke end.	Head side trunnion mounting No position detection at head side stroke end.
Switch quantity	1	2	3	4	1	2	3	4	1	2	3	4	1	1
ø40	20(10)	20(20)	40(40)	60(60)	20(10)	60(45)	105(75)	150(105)	110(110)	110(110)	175(145)	175(145)	50(50)	50(50)
ø50	15(10)	20(20)	40(40)	60(60)	15(10)	20(20)	65(50)	65(60)	135(135)	135(135)	135(135)	135(135)	60(60)	60(60)
ø63	15(10)	20(20)	40(40)	60(60)	15(10)	20(20)	70(55)	70(60)	110(95)	110(95)	110(100)	110(100)	50(45)	50(45)
ø80	15(15)	25(25)	45(45)	65(65)	15(15)	25(25)	70(55)	70(65)	115(85)	115(85)	115(105)	115(105)	55(40)	55(40)
ø100	15(15)	25(25)	45(45)	70(70)	15(15)	25(25)	70(55)	70(70)	125(95)	125(95)	125(115)	125(115)	60(45)	60(45)

*1:The values in ( ) are of T*V (L-shaped lead wire).
*2:When the stroke is 15 mm or less, the two switches could turn ON at the same time. In this case, adjust switch mounting positions to be as far apart as possible.

● T8 min. stroke with switch

	Different surface mounting				Same surface mounting				Center trunnion mounting				Rod side trunnion mounting No position detection at rod side stroke end.	Head side trunnion mounting No position detection at head side stroke end.
Switch quantity	1	2	3	4	1	2	3	4	1	2	3	4	1	1
ø40	15(10)	20(20)	40(40)	60(60)	15(10)	50(35)	95(65)	140(95)	95(85)	95(85)	155(125)	155(125)	45(40)	45(40)
ø50	10(10)	20(20)	40(40)	60(60)	10(10)	20(20)	70(55)	70(60)	115(115)	115(115)	135(135)	135(135)	50(50)	50(50)
ø63	10(10)	20(20)	40(40)	60(60)	10(10)	20(20)	70(55)	70(60)	95(75)	95(75)	110(110)	110(110)	45(35)	45(35)
ø80	15(15)	25(25)	45(45)	65(65)	15(15)	25(25)	70(55)	70(65)	100(70)	100(70)	115(115)	115(115)	50(35)	50(35)
ø100	15(15)	25(25)	45(45)	65(65)	15(15)	25(25)	70(55)	70(65)	110(80)	110(80)	125(125)	125(125)	55(40)	55(40)

*1: The values in ( ) are of T*V (L-shaped lead wire).
*2: When the stroke is 15 mm or less, the two switches could turn ON at the same time. In this case, adjust switch mounting positions to be as far apart as possible.

Switch specifications

● T2/T3 min. stroke with switches

	Different surface mounting				Same surface mounting				Center trunnion mounting				Rod side trunnion mounting No position detection at rod side stroke end.	Head side trunnion mounting No position detection at head side stroke end.
Switch quantity	1	2	3	4	1	2	3	4	1	2	3	4	1	1
ø40	20(10)	20(15)	25(25)	40(40)	20(10)	60(45)	105(75)	150(105)	105(75)	105(75)	165(135)	165(135)	50(35)	50(35)
ø50	15(10)	15(15)	25(25)	40(40)	15(10)	15(15)	60(45)	60(45)	105(75)	105(75)	105(75)	105(75)	45(30)	45(30)
ø63	15(10)	15(15)	25(25)	40(40)	15(10)	15(15)	60(45)	60(45)	110(80)	110(80)	110(85)	110(85)	50(35)	50(35)
ø80	15(10)	15(15)	30(30)	45(45)	15(10)	15(15)	60(45)	60(45)	115(85)	115(85)	115(90)	115(90)	55(40)	55(40)
ø100	10(10)	15(15)	30(30)	45(45)	10(10)	15(15)	60(45)	60(45)	125(95)	125(95)	125(100)	125(100)	60(45)	60(45)

*1:The values in ( ) are of T*V (L-shaped lead wire).
*2:When the stroke is 15 mm or less, the two switches could turn ON at the same time. In this case, adjust switch mounting positions to be as far apart as possible.

● T1/T2Y/T3Y/T2YD min. stroke with switches

	Different surface mounting				Same surface mounting				Center trunnion mounting				Rod side trunnion mounting No position detection at rod side stroke end.	Head side trunnion mounting No position detection at head side stroke end.
Switch quantity	1	2	3	4	1	2	3	4	1	2	3	4	1	1
ø40	20(10)	20(15)	25(25)	40(40)	20(10)	60(45)	105(75)	150(105)	105(75)	105(75)	165(135)	165(135)	50(35)	50(35)
ø50	15(10)	15(15)	25(25)	40(40)	15(10)	15(15)	60(45)	60(45)	100(70)	100(70)	100(75)	100(75)	45(30)	45(30)
ø63	15(10)	15(15)	25(25)	40(40)	15(10)	15(15)	60(45)	60(45)	105(75)	105(75)	105(85)	105(85)	50(35)	50(35)
ø80	15(10)	15(15)	30(30)	45(45)	15(10)	15(15)	60(45)	60(45)	110(80)	110(80)	110(90)	110(90)	55(40)	55(40)
ø100	10(10)	15(15)	30(30)	45(45)	10(10)	15(15)	60(45)	60(45)	120(90)	120(90)	120(100)	120(100)	60(45)	60(45)

*1:The values in ( ) are of T*V (L-shaped lead wire). T2YD does not have an L-shaped lead wire (V).
*2:When the stroke is 15 mm or less, the two switches could turn ON at the same time. In this case, adjust switch mounting positions to be as far apart as possible.

● T2W/T3W min. stroke with switches

	Different surface mounting				Same surface mounting				Center trunnion mounting				Rod side trunnion mounting No position detection at rod side stroke end.	Head side trunnion mounting No position detection at head side stroke end.
Switch quantity	1	2	3	4	1	2	3	4	1	2	3	4	1	1
ø40	20(5)	20(10)	20(15)	25(25)	20(5)	65(50)	110(80)	155(110)	110(80)	110(80)	170(140)	170(140)	50(35)	50(35)
ø50	20(5)	20(10)	20(15)	20(20)	20(5)	20(10)	65(40)	65(40)	110(80)	110(80)	110(80)	110(80)	50(35)	50(35)
ø63	20(5)	20(10)	20(15)	25(25)	20(5)	20(10)	65(40)	65(40)	115(85)	115(85)	115(85)	115(85)	55(40)	55(40)
ø80	15(5)	15(10)	15(15)	25(25)	15(5)	15(10)	60(40)	60(40)	120(90)	120(90)	120(90)	120(90)	55(40)	55(40)
ø100	10(5)	10(10)	20(20)	25(25)	10(5)	10(10)	60(40)	60(40)	130(100)	130(100)	130(100)	130(100)	60(45)	60(45)

*1:The values in ( ) are of T*V (L-shaped lead wire).
*2:When the stroke is 15 mm or less, the two switches could turn ON at the same time. In this case, adjust switch mounting positions to be as far apart as possible.

SCP*3
CMK2
CMA2
SCM
SCG
SCA2
SCS2
CKV2
CAV2/COVP/N2
SSD2
SSG
SSD
CAT
MDC2
MVC
SMG
MSD/MSDG
FC*
STK
SRL3
SRG3
SRM3
SRT3
MRL2
MRG2
SM-25
ShkAbs
FJ
FK
Spd Contr
Ending

Switch specifications (T-switch)

● 1-color/2-color LED/for AC magnetic field proof

Item	2-wire proximity	2-wire proximity			3-wire proximity				2-wire reed							2-wire proximity
	T1H/T1V	T2H/T2V/T2JH/T2JV	T2YH/T2YV	T2WH/T2WV	T3H/T3V	T3PH/T3PV	T3YH/T3YV	T3WH/T3WV	T0H/T0V		T5H/T5V		T8H/T8V			T2YD (*4) T2YDT
Applications	For programming controller, relay, compact solenoid valve	Dedicated for programmable controller			For programmable controller, relay				For programmable controller, relay		For programmable controller, relay (no lamp), serial		For programmable controller, relay			Dedicated for programmable controller
Output method	-				NPN output	PNP output	NPN output	NPN output	-							
Pwr. supp. V.	-				10 to 28 VDC				-							
Load voltage	85 to 265 VAC	10 to 30 VDC		24 VDC ±10%	30 VDC or less				12/24 VDC	110 VAC	5/12/24 VDC	110 VAC	12/24 VDC	110 VAC	220 VAC	24 VDC ±10%
Load current	5 to 100 mA	5 to 20 mA (*3)			100 mA or less		50 mA or less		5 to 50 mA	7 to 20 mA	50 mA or less	20 mA or less	5 to 50 mA	7 to 20 mA	7 to 10 mA	5 to 20 mA
Indicator	LED (Lit when ON)	LED (Lit when ON)	Red/green LED (Lit when ON)	Red/green LED (Lit when ON)	LED (Lit when ON)	Yellow LED (Lit when ON)	Red/green LED (Lit when ON)	Red/green LED (Lit when ON)	LED (Lit when ON)		No indicator lamp		LED (Lit when ON)			Red/green LED (Lit when ON)
Leakage current	≤ 1 mA at 100 VAC, ≤ 2 mA at 200 VAC	1 mA or less			10 μA or less				0 mA							1 mA or less
Weight g	1 m:33 3 m:87 5 m:142	1 m:18 3 m:49 5 m:80	1 m:33 3 m:87 5 m:142	1 m:18 3 m:49 5 m:80	1 m:18 3 m:49 5 m:80		1 m:33 3 m:87 5 m:142	1 m:18 3 m:49 5 m:80	1 m:18 3 m:49 5 m:80				1 m:33 3 m:87 5 m:142			1 m:61 3 m:166 5 m:272

*1 : Refer to Ending Page 1 for detailed switch specifications and dimensions.
*2 : Switches other than the above models, such as switches with connectors, are also available. Refer to Ending Page 1.
*3 : Max. load current: 20 mA at 25°C. The current is lower than 20 mA if the operating ambient temperature around the switch is higher than 25˚C. (5 to 10 mA at 60°C)
*4 : Switch for AC magnetic field (T2YD/T2YDT) cannot be used in DC magnetic field.

Cylinder weight

(Unit: kg)

Bore size (mm)	Product weight when stroke (S) = 0 mm						Switch weight	Mounting bracket weight	Additional weight per S = 100 mm
	Basic (00)	Foot (LB)	Flange (FA, FB)	Eye bracket (CA)	Clevis bracket (CB)	Trunnion (TA, TB, TC)		T type	
ø40	0.83	1.00	1.24	1.15	1.19	1.21	Refer to the weight in the switch specifications.	0.024	0.39
ø50	1.20	1.45	1.69	1.58	1.61	1.74		0.022	0.46
ø63	1.60	1.97	2.69	2.17	2.22	2.45		0.020	0.50
ø80	2.60	3.34	4.46	3.87	4.08	3.94		0.026	0.90
ø100	4.20	5.11	6.94	5.84	6.02	6.77		0.024	1.12

(Example) Product weight of SCA2-O-LB-50B-200-T0H-D

- Product weight for 0 mm stroke····· 1.45 kg
- Additional weight for 200 mm stroke····· 0.46 x $\frac{200}{100}$ = 0.92 kg
- Weight of 2 TOH switches····· 0.018 x 2 = 0.036 kg
- Weight of 2 mounting brackets·····0.022 x 2 = 0.044 kg
- Product weight····· 1.45 + 0.92 + 0.036 + 0.044 = 2.450 kg

Theoretical thrust table

(Unit: N)

Bore size (mm)	Operating direction	Working pressure MPa											
		0.01	0.1	0.15	0.2	0.3	0.4	0.5	0.6	0.7	0.8	0.9	1.0
ø40	Push	1.26x10	$1.26x10^2$	$1.88x10^2$	$2.51x10^2$	$3.77x10^2$	$5.03x10^2$	$6.28x10^2$	$7.54x10^2$	$8.80x10^2$	$1.01x10^3$	$1.13x10^3$	$1.26x10^3$
	Pull	1.06x10	$1.06x10^2$	$1.58x10^2$	$2.11x10^2$	$3.17x10^2$	$4.22x10^2$	$5.28x10^2$	$6.33x10^2$	$7.39x10^2$	$8.44x10^2$	$9.50x10^2$	$1.06x10^3$
ø50	Push	1.96x10	$1.96x10^2$	$2.95x10^2$	$3.93x10^2$	$5.89x10^2$	$7.85x10^2$	$9.82x10^2$	$1.18x10^3$	$1.37x10^3$	$1.57x10^3$	$1.77x10^3$	$1.96x10^3$
	Pull	1.65x10	$1.65x10^2$	$2.47x10^2$	$3.30x10^2$	$4.95x10^2$	$6.60x10^2$	$8.25x10^2$	$9.90x10^2$	$1.15x10^3$	$1.32x10^3$	$1.48x10^3$	$1.65x10^3$
ø63	Push	3.12x10	$3.12x10^2$	$4.68x10^2$	$6.23x10^2$	$9.35x10^2$	$1.25x10^3$	$1.56x10^3$	$1.87x10^3$	$2.18x10^3$	$2.49x10^3$	$2.81x10^3$	$3.12x10^3$
	Pull	2.80x10	$2.80x10^2$	$4.20x10^2$	$5.61x10^2$	$8.41x10^2$	$1.12x10^3$	$1.40x10^3$	$1.68x10^3$	$1.96x10^3$	$2.24x10^3$	$2.52x10^3$	$2.80x10^3$
ø80	Push	5.03x10	$5.03x10^2$	$7.54x10^2$	$1.01x10^3$	$1.51x10^3$	$2.01x10^3$	$2.51x10^3$	$3.02x10^3$	$3.52x10^3$	$4.02x10^3$	$4.52x10^3$	$5.03x10^3$
	Pull	4.54x10	$4.54x10^2$	$6.80x10^2$	$9.07x10^2$	$1.36x10^3$	$1.81x10^3$	$2.27x10^3$	$2.72x10^3$	$3.17x10^3$	$3.63x10^3$	$4.08x10^3$	$4.54x10^3$
ø100	Push	7.85x10	$7.85x10^2$	$1.18x10^3$	$1.57x10^3$	$2.36x10^3$	$3.14x10^3$	$3.93x10^3$	$4.71x10^3$	$5.50x10^3$	$6.28x10^3$	$7.07x10^3$	$7.85x10^3$
	Pull	7.15x10	$7.15x10^2$	$1.07x10^3$	$1.43x10^3$	$2.14x10^3$	$2.86x10^3$	$3.57x10^3$	$4.29x10^3$	$5.00x10^3$	$5.72x10^3$	$6.43x10^3$	$7.15x10^3$

SCP*3
CMK2
CMA2
SCM
SCG
SCA2
SCS2
CKV2
CAV2/COVP/N2
SSD2
SSG
SSD
CAT
MDC2
MVC
SMG
MSD/MSDG
FC*
STK
SRL3
SRG3
SRM3
SRT3
MRL2
MRG2
SM-25
ShkAbs
FJ
FK
Spd Contr
Ending

How to order

No switch (built-in magnet for switch)

SCA2-O - LB - 40 ( ) N - 100 ———— M I

With switch (built-in magnet for switch)

SCA2-O - LB - 40 ( ) N - 100 - T0H - R - M I

- Ⓐ Mounting *1
- Ⓑ Bore size
- Ⓒ Port thread
- Ⓓ Cushion
- Ⓔ Stroke *2
- Ⓕ Switch model No. *4
- Ⓖ Switch quantity *5
- Ⓗ Option
- Ⓘ Accessory *6

Code	Description
Ⓐ Mounting	
00	Basic
LB	Axial foot
FA	Rod side flange
FB	Head side flange
FC	Head side special flange
CA	Eye bracket
CB	Clevis bracket (pin and snap ring included)
TC	Intermediate trunnion
TA	Rod side trunnion
TB	Head side trunnion
TF	Intermediate supporting hole trunnion (ø40 is not available)
TD	Rod side hole trunnion (ø40 is not available)
TE	Head side hole trunnion (ø40 is not available)

Ⓑ Bore size (mm)	
40	ø40
50	ø50
63	ø63
80	ø80
100	ø100

Ⓒ Port thread	
Blank	Rc thread
N	NPT thread (made-to-order product)
G	G thread (made-to-order product)

Ⓓ Cushion	
N	Without cushion

Ⓔ Stroke (mm)

Bore size	Stroke *3	Custom stroke
ø40	**1 to 600**	**In 1 mm increments**
ø50	**1 to 600**	
ø63	**1 to 600**	
ø80	**1 to 700**	
ø100	**1 to 800**	

Ⓕ Switch model No.

Refer to the switch model numbers on the next page.

*** Lead wire length**	
Blank	1 m (standard)
3	3 m (option)
5	5 m (option)

Ⓖ Switch quantity	
R	1 on rod side
H	1 on head side
D	2
T	3

Ⓗ Option	
M	Piston rod material (stainless steel)
P6	Copper and PTFE free (made-to-order product)

Ⓘ Accessory	
I	Rod eye
Y	Rod clevis (pin and snap ring included)
B1	Eye bracket
B2	Clevis bracket (pin and snap ring included)
B3	Eye bracket
B4	Trunnion No. 2 bracket (2 pcs./set)

⚠ Precautions for model No. selection

*1 : Mounting bracket will be shipped with the product. (Trunnion are assembled at shipment.)
*2 : If the stroke exceeds the max. stroke, refer to Ending Page 69.
*3 : Refer to pages 526 and 527 for the min. stroke with switch.
*4 : Switches are shipped with the product.
*5 : When selecting TA, TD, TB or TE mounting, the switch quantity is limited to "H" (1 on head side) for TA and TD, and "R" (1 on rod side) for TB and TE.
*6 : "I" and "Y" cannot be selected together.
*7 : Refer to Ending Page 85 for custom specifications of rod end form.
*8 : Refer to page 448 for combinations of variations/options.

[Example of model No.]

SCA2-O-LB-40N-100-T0H-R-MI

Model: Medium bore size cylinder, double acting/low friction

Ⓐ	Mounting	: Axial foot
Ⓑ	Bore size	: ø40 mm
Ⓒ	Port thread	: Rc thread
Ⓓ	Cushion	: Without cushion
Ⓔ	Stroke	: 100 mm
Ⓕ	Switch model No.	: Reed T0H switch, lead wire length 1 m
Ⓖ	Switch quantity	: 1 on rod side
Ⓗ	Option	: Piston rod material change (stainless steel)
Ⓘ	Accessory	: Rod eye

[F] Switch model No.

T-switch model No.						
Lead wire Straight	Lead wire L-shaped	Contact	Voltage AC	Voltage DC	Indicator	Lead wire
T0H*	T0V*	Reed	●	●	1-color LED	2-wire
T5H*	T5V*	Reed	●	●	No indicator lamp	2-wire
T8H*	T8V*	Reed	●	●	1-color LED	2-wire
T1H*	T1V*	Proximity	●		1-color LED	2-wire
T2H*	T2V*	Proximity		●	1-color LED	2-wire
T3H*	T3V*	Proximity		●	1-color LED	3-wire
T2WH*	T2WV*	Proximity		●	2-color LED	2-wire
T2YH*	T2YV*	Proximity		●	2-color LED	2-wire
T3WH*	T3WV*	Proximity		●	2-color LED	3-wire
T3YH*	T3YV*	Proximity		●	2-color LED	3-wire
T3PH*	T3PV*	Proximity		●	1-color LED	3-wire
T2YD*	-	Proximity		●	2-color LED AC magnetic field	2-wire
T2YDT*	-	Proximity		●	2-color LED AC magnetic field	2-wire
T2JH*	T2JV*	Proximity		●	1-color LED off-delay	2-wire

How to order switch

[T-switch]

● Switch body + mounting bracket set

SCA2 - T0H - 40

Switch model No. (Item Ⓕ)

Bore size (Item Ⓑ on page 530)

● Switch body only

SW - T0H

Switch model No. (Item Ⓕ)

* Contact CKD when using an environment-friendly T-switch.

● Switch mounting bracket set

SCA2 - TS - 40

Mounting bracket

Bore size (Item Ⓑ on page 530)

[T2YD switch]

● Switch body + mounting bracket set

SCA2 - T2YD - 40

Switch model No. (Item Ⓕ)

Bore size (Item Ⓑ on page 530)

● Switch body only

SW - T2YD

Switch model No. (Item Ⓕ)

● Mounting bracket set Ⓑ

SCA2 - T - 40

Bore size (Item Ⓑ on page 530)

How to order mounting bracket

Bore size (mm) / Mounting bracket	ø40	ø50	ø63	ø80	ø100
Foot (LB) *2	S1-LB-40	S1-LB-50	S1-LB-63	S1-LB-80	S1-LB-100
Flange (FA/FB)	S1-FA-40	S1-FA-50	S1-FA-63	S1-FA-80	S1-FA-100
Eye bracket (CA)	S1-CA-40	S1-CA-50	S1-CA-63	S1-CA-80	S1-CA-100
Clevis bracket (CB)	S1-CB-40	S1-CB-50	S1-CB-63	S1-CB-80	S1-CB-100

*1 : For material of the mounting bracket, refer to page 456.
*2 : The foot mounting bracket is provided as 2 pcs./set.
*3 : All mounting brackets are supplied with mounting bolts.

Internal structure and parts list

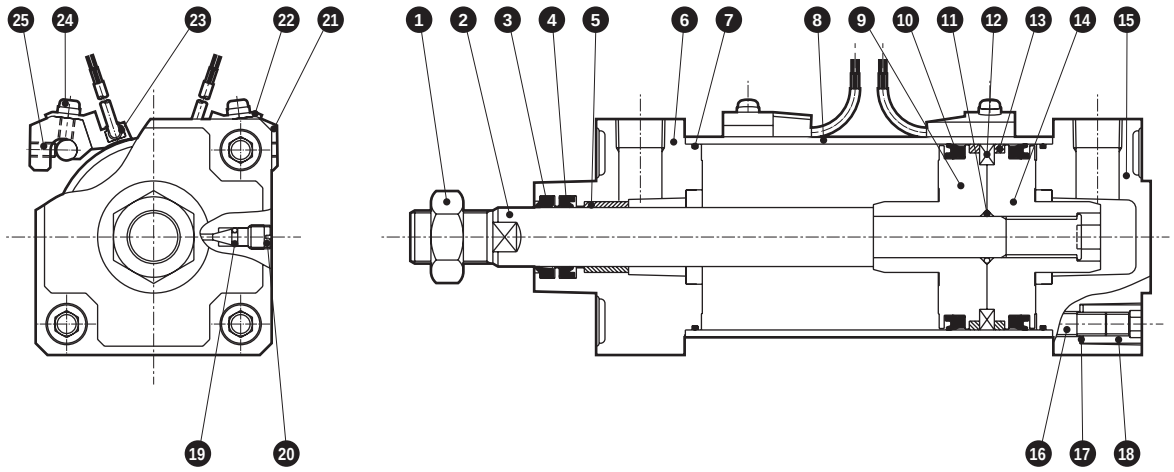

No.	Part name	Material	Remarks	No.	Part name	Material	Remarks
1	Rod nut	Steel	Zinc chromate	14	Piston H	Aluminum alloy die-casting	
2	Piston rod	Steel	Industrial chrome plating	15	Head cover	Aluminum alloy die-casting	Paint
3	Dust wiper	Nitrile rubber		16	Tie rod	Steel	Zinc chromate
4	Rod packing	Nitrile rubber		17	Conical spring washer	Steel	Black finish
5	Bush	Oil impregnated bearing alloy		18	Round nut	Steel	Zinc chromate
6	Rod cover	Aluminum alloy die-casting	Paint	19	Needle gasket	Nitrile rubber	
7	Cylinder gasket	Nitrile rubber		20	Cushion plug	Copper alloy	Nickel plating
8	Cylinder tube	Aluminum alloy	Hard alumite treatment	21	Switch mounting base	Aluminum alloy	
9	Piston R	Aluminum alloy die-casting		22	Switch holder	Aluminum alloy	
10	Piston packing	Nitrile rubber		23	Cylinder switch		
11	Piston gasket	Nitrile rubber		24	Phillips pan head machine screw/captive washer	Steel	Zinc chromate
12	Magnet	Plastic		25	Hexagon socket set screw	Alloy steel	Black finish
13	Wear ring	Polyacetal resin					

Repair parts list

Bore size (mm)	Kit No.	Repair parts No.
ø 40	SCA2-O-40K	3 4 7 10 13 19
ø 50	SCA2-O-50K	
ø 63	SCA2-O-63K	
ø 80	SCA2-O-80K	
ø100	SCA2-O-100K	

*1 : Specify the kit No. when placing an order.

Dimensions

Same as double acting/standard single rod. Refer to pages 457 to 469.

MEMO

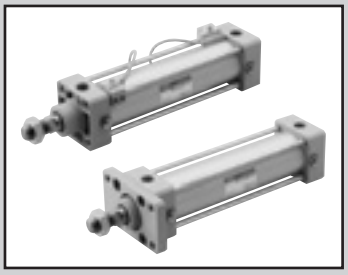

Medium bore size cylinder
Double acting/low friction (constant friction when pressurized)

SCA2-U Series

● Bore size: ø40/ø50/ø63/ø80/ø100

JIS symbol

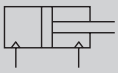

RoHS CAD

Specifications

Item		SCA2-U				
Bore size		ø40	ø50	ø63	ø80	ø100
Actuation		Double acting				
Working fluid		Compressed air				
Max. working pressure	MPa	0.7 (≈100 psi, 7 bar)				
Min. working pressure	MPa	0.03 (≈4.4 psi, 0.3 bar)				
Proof pressure	MPa	1.0 (≈150 psi, 10 bar)				
Ambient temperature	°C	5 (41°F) to 60 (140°F)				
Port size		Rc1/4	Rc3/8		Rc1/2	
Stroke tolerance	mm	$^{+0.9}_{0}$ (to 360), $^{+1.4}_{0}$ (to 800)				
Working piston speed	mm	10 to 1000				
Cushion		None				
Lubrication		Not available				
Internal leakage	m^3/min	0.005			0.008	
Allowable absorbed energy	J	0.067	0.079	0.079	0.201	0.301
		As it has no cushion, this product cannot absorb high energy generated by an external load. We recommend using an external shock absorber.				

Stroke

Bore size (mm)	Standard stroke (mm)	Max. stroke (mm)	Min. stroke (mm)
ø40	25/50/75/100 150/200/250 300/350/400 450/500	600	1
ø50			
ø63			
ø80		700	
ø100		800	

*1: The custom stroke is available in 1 mm increments.

Min. stroke with switch

● T0/T5 min. stroke with switches

	Different surface mounting				Same surface mounting				Center trunnion mounting				Rod side trunnion mounting No position detection at rod side stroke end.	Head side trunnion mounting No position detection at head side stroke end.
Switch quantity	1	2	3	4	1	2	3	4	1	2	3	4	1	1
ø40	20(10)	20(20)	40(40)	60(60)	20(10)	60(45)	105(75)	150(105)	110(110)	110(110)	175(145)	175(145)	50(50)	50(50)
ø50	15(10)	20(20)	40(40)	60(60)	15(10)	20(20)	65(50)	65(60)	135(135)	135(135)	135(135)	135(135)	60(60)	60(60)
ø63	15(10)	20(20)	40(40)	60(60)	15(10)	20(20)	70(55)	70(60)	110(95)	110(95)	110(100)	110(100)	50(45)	50(45)
ø80	15(15)	25(25)	45(45)	65(65)	15(15)	25(25)	70(55)	70(65)	115(85)	115(85)	115(105)	115(105)	55(40)	55(40)
ø100	15(15)	25(25)	45(45)	70(70)	15(15)	25(25)	70(55)	70(70)	125(95)	125(95)	125(115)	125(115)	60(45)	60(45)

*1:The values in ( ) are of T*V (L-shaped lead wire).
*2:When the stroke is 15 mm or less, the two switches could turn ON at the same time. In this case, adjust switch mounting positions to be as far apart as possible.

● T8 min. stroke with switch

	Different surface mounting				Same surface mounting				Center trunnion mounting				Rod side trunnion mounting No position detection at rod side stroke end.	Head side trunnion mounting No position detection at head side stroke end.
Switch quantity	1	2	3	4	1	2	3	4	1	2	3	4	1	1
ø40	15(10)	20(20)	40(40)	60(60)	15(10)	50(35)	95(65)	140(95)	95(85)	95(85)	155(125)	155(125)	45(40)	45(40)
ø50	10(10)	20(20)	40(40)	60(60)	10(10)	20(20)	70(55)	70(60)	115(115)	115(115)	135(135)	135(135)	50(50)	50(50)
ø63	10(10)	20(20)	40(40)	60(60)	10(10)	20(20)	70(55)	70(60)	95(75)	95(75)	110(110)	110(110)	45(35)	45(35)
ø80	15(15)	25(25)	45(45)	65(65)	15(15)	25(25)	70(55)	70(65)	100(70)	100(70)	115(115)	115(115)	50(35)	50(35)
ø100	15(15)	25(25)	45(45)	65(65)	15(15)	25(25)	70(55)	70(65)	110(80)	110(80)	125(125)	125(125)	55(40)	55(40)

*1:The values in ( ) are of T*V (L-shaped lead wire).
*2:When the stroke is 15 mm or less, the two switches could turn ON at the same time. In this case, adjust switch mounting positions to be as far apart as possible.

Min. stroke with switch

● T2/T3 min. stroke with switches

	Different surface mounting				Same surface mounting				Center trunnion mounting				Rod side trunnion mounting No position detection at rod side stroke end.	Head side trunnion mounting No position detection at head side stroke end.
Switch quantity	1	2	3	4	1	2	3	4	1	2	3	4	1	1
ø40	20(10)	20(15)	25(25)	40(40)	20(10)	60(45)	105(75)	150(105)	105(75)	105(75)	165(135)	165(135)	50(35)	50(35)
ø50	15(10)	15(15)	25(25)	40(40)	15(10)	15(15)	60(45)	60(45)	105(75)	105(75)	105(75)	105(75)	45(30)	45(30)
ø63	15(10)	15(15)	25(25)	40(40)	15(10)	15(15)	60(45)	60(45)	110(80)	110(80)	110(85)	110(85)	50(35)	50(35)
ø80	15(10)	15(15)	30(30)	45(45)	15(10)	15(15)	60(45)	60(45)	115(85)	115(85)	115(90)	115(90)	55(40)	55(40)
ø100	10(10)	15(15)	30(30)	45(45)	10(10)	15(15)	60(45)	60(45)	125(95)	125(95)	125(100)	125(100)	60(45)	60(45)

*1:The values in ( ) are of T*V (L-shaped lead wire).
*2:When the stroke is 15 mm or less, the two switches could turn ON at the same time. In this case, adjust switch mounting positions to be as far apart as possible.

● T1/T2Y/T3Y/T2YD min. stroke with switches

	Different surface mounting				Same surface mounting				Center trunnion mounting				Rod side trunnion mounting No position detection at rod side stroke end.	Head side trunnion mounting No position detection at head side stroke end.
Switch quantity	1	2	3	4	1	2	3	4	1	2	3	4	1	1
ø40	20(10)	20(15)	25(25)	40(40)	20(10)	60(45)	105(75)	150(105)	105(75)	105(75)	165(135)	165(135)	50(35)	50(35)
ø50	15(10)	15(15)	25(25)	40(40)	15(10)	15(15)	60(45)	60(45)	100(70)	100(70)	100(75)	100(75)	45(30)	45(30)
ø63	15(10)	15(15)	25(25)	40(40)	15(10)	15(15)	60(45)	60(45)	105(75)	105(75)	105(85)	105(85)	50(35)	50(35)
ø80	15(10)	15(15)	30(30)	45(45)	15(10)	15(15)	60(45)	60(45)	110(80)	110(80)	110(90)	110(90)	55(40)	55(40)
ø100	10(10)	15(15)	30(30)	45(45)	10(10)	15(15)	60(45)	60(45)	120(90)	120(90)	120(100)	120(100)	60(45)	60(45)

*1:The values in ( ) are of T*V (L-shaped lead wire). T2YD does not have an L-shaped lead wire (V).
*2:When the stroke is 15 mm or less, the two switches could turn ON at the same time. In this case, adjust switch mounting positions to be as far apart as possible.

● T2W/T3W min. stroke with switches

	Different surface mounting				Same surface mounting				Center trunnion mounting				Rod side trunnion mounting No position detection at rod side stroke end.	Head side trunnion mounting No position detection at head side stroke end.
Switch quantity	1	2	3	4	1	2	3	4	1	2	3	4	1	1
ø40	20(5)	20(10)	20(15)	25(25)	20(5)	65(50)	110(80)	155(110)	110(80)	110(80)	170(140)	170(140)	50(35)	50(35)
ø50	20(5)	20(10)	20(15)	20(20)	20(5)	20(10)	65(40)	65(40)	110(80)	110(80)	110(80)	110(80)	50(35)	50(35)
ø63	20(5)	20(10)	20(15)	25(25)	20(5)	20(10)	65(40)	65(40)	115(85)	115(85)	115(85)	115(85)	55(40)	55(40)
ø80	15(5)	15(10)	15(15)	25(25)	15(5)	15(10)	60(40)	60(40)	120(90)	120(90)	120(90)	120(90)	55(40)	55(40)
ø100	10(5)	10(10)	20(20)	25(25)	10(5)	10(10)	60(40)	60(40)	130(100)	130(100)	130(100)	130(100)	60(45)	60(45)

*1:The values in ( ) are of T*V (L-shaped lead wire).
*2:When the stroke is 15 mm or less, the two switches could turn ON at the same time. In this case, adjust switch mounting positions to be as far apart as possible.

SCP*3
CMK2
CMA2
SCM
SCG
SCA2
SCS2
CKV2
CAV2/COVP/N2
SSD2
SSG
SSD
CAT
MDC2
MVC
SMG
MSD/MSDG
FC*
STK
SRL3
SRG3
SRM3
SRT3
MRL2
MRG2
SM-25
ShkAbs
FJ
FK
Spd Contr
Ending

Switch specifications (T-switch)

● 1-color/2-color LED/for AC magnetic field proof

Item	2-wire proximity	2-wire proximity			3-wire proximity				2-wire reed							2-wire proximity
	T1H/T1V	T2H/T2V/T2JH/T2JV	T2YH/T2YV	T2WH/T2WV	T3H/T3V	T3PH/T3PV	T3YH/T3YV	T3WH/T3WV	T0H/T0V		T5H/T5V		T8H/T8V			T2YD (*4) T2YDT
Applications	For programming controller, relay, compact solenoid valve	Dedicated for programmable controller			For programmable controller, relay				For programmable controller, relay		For programmable controller, relay (no lamp), serial		For programmable controller, relay			Dedicated for programmable controller
Output method	-				NPN output	PNP output	NPN output	NPN output	-							
Pwr. supp. V.	-				10 to 28 VDC				-							
Load voltage	85 to 265 VAC	10 to 30 VDC		24 VDC ±10%	30 VDC or less				12/24 VDC	110 VAC	5/12/24 VDC	110 VAC	12/24 VDC	110 VAC	220 VAC	24 VDC ±10%
Load current	5 to 100 mA	5 to 20 mA (*3)			100 mA or less		50 mA or less		5 to 50 mA	7 to 20 mA	50 mA or less	20 mA or less	5 to 50 mA	7 to 20 mA	7 to 10 mA	5 to 20 mA
Indicator	LED (Lit when ON)	LED (Lit when ON)	Red/green LED (Lit when ON)	Red/green LED (Lit when ON)	LED (Lit when ON)	Yellow LED (Lit when ON)	Red/green LED (Lit when ON)	Red/green LED (Lit when ON)	LED (Lit when ON)		No indicator lamp		LED (Lit when ON)			Red/green LED (Lit when ON)
Leakage current	≤ 1 mA at 100 VAC, ≤ 2 mA at 200 VAC	1 mA or less			10 μA or less				0 mA							1 mA or less
Weight g	1 m:33 3 m:87 5 m:142	1 m:18 3 m:49 5 m:80	1 m:33 3 m:87 5 m:142	1 m:18 3 m:49 5 m:80	1 m:18 3 m:49 5 m:80		1 m:33 3 m:87 5 m:142	1 m:18 3 m:49 5 m:80	1 m:18 3 m:49 5 m:80				1 m:33 3 m:87 5 m:142			1 m:61 3 m:166 5 m:272

*1 : Refer to Ending Page 1 for detailed switch specifications and dimensions.
*2 : Switches other than the above models, such as switches with connectors, are also available. Refer to Ending Page 1.
*3 : Max. load current: 20 mA at 25°C. The current is lower than 20 mA if the operating ambient temperature around the switch is higher than 25˚C. (5 to 10 mA at 60°C)
*4 : Switch for AC magnetic field (T2YD/T2YDT) cannot be used in DC magnetic field.

Cylinder weight

(Unit: kg)

Bore size (mm)	Product weight when stroke (S) = 0 mm							Switch weight	Mounting bracket weight	Additional weight per S = 100 mm
	Basic (OO)	Foot (LB)	Flange (FA, FB)	Special flange (FC)	Eye bracket (CA)	Clevis bracket (CB)	Trunnion (TA, TB, TC)		T type	
ø40	0.83	1.00	1.24	0.92	1.15	1.19	1.21	Refer to the weight in the switch specifications.	0.024	0.39
ø50	1.20	1.45	1.69	1.31	1.58	1.61	1.74		0.022	0.46
ø63	1.60	1.97	2.69	1.78	2.17	2.22	2.45		0.020	0.50
ø80	2.60	3.34	4.46	2.96	3.87	4.08	3.94		0.026	0.90
ø100	4.20	5.11	6.94	4.75	5.84	6.02	6.77		0.024	1.12

(Example) Product weight of SCA2-U-LB-50B-200-T0H-D

- Product weight for 0 mm stroket····· 1.45 kg
- Additional weight for 200 mm stroke.t····· 0.46 x $\frac{200}{100}$ = 0.92 kg
- Weight of 2 TOH switchest····· 0.018 x 2 = 0.036 kg
- Weight of 2 mounting bracketst····· 0.022 x 2 = 0.044 kg
- ● Product weight····· 1.45 + 0.92 + 0.036 + 0.044 = 2.450 kg

Theoretical thrust table

(Unit: N)

Bore size (mm)	Operating direction	Working pressure MPa								
		0.03	0.1	0.15	0.2	0.3	0.4	0.5	0.6	0.7
ø40	Push	37.8	$1.26x10^2$	$1.88x10^2$	$2.51x10^2$	$3.77x10^2$	$5.03x10^2$	$6.28x10^2$	$7.54x10^2$	$8.80x10^2$
	Pull	31.8	$1.06x10^2$	$1.58x10^2$	$2.11x10^2$	$3.17x10^2$	$4.22x10^2$	$5.28x10^2$	$6.33x10^2$	$7.39x10^2$
ø50	Push	58.8	$1.96x10^2$	$2.95x10^2$	$3.93x10^2$	$5.89x10^2$	$7.85x10^2$	$9.82x10^2$	$1.18x10^3$	$1.37x10^3$
	Pull	49.5	$1.65x10^2$	$2.47x10^2$	$3.30x10^2$	$4.95x10^2$	$6.60x10^2$	$8.25x10^2$	$9.90x10^2$	$1.15x10^3$
ø63	Push	93.6	$3.12x10^2$	$4.68x10^2$	$6.23x10^2$	$9.35x10^2$	$1.25x10^3$	$1.56x10^3$	$1.87x10^3$	$2.18x10^3$
	Pull	84.0	$2.80x10^2$	$4.20x10^2$	$5.61x10^2$	$8.41x10^2$	$1.12x10^3$	$1.40x10^3$	$1.68x10^3$	$1.96x10^3$
ø80	Push	$1.51x10^2$	$5.03x10^2$	$7.54x10^2$	$1.01x10^3$	$1.51x10^3$	$2.01x10^3$	$2.51x10^3$	$3.02x10^3$	$3.52x10^3$
	Pull	$1.36x10^2$	$4.54x10^2$	$6.80x10^2$	$9.07x10^2$	$1.36x10^3$	$1.81x10^3$	$2.27x10^3$	$2.72x10^3$	$3.17x10^3$
ø100	Push	$2.36x10^2$	$7.85x10^2$	$1.18x10^3$	$1.57x10^3$	$2.36x10^3$	$3.14x10^3$	$3.93x10^3$	$4.71x10^3$	$5.50x10^3$
	Pull	$2.15x10^2$	$7.15x10^2$	$1.07x10^3$	$1.43x10^3$	$2.14x10^3$	$2.86x10^3$	$3.57x10^3$	$4.29x10^3$	$5.00x10^3$

Dimensions

Same as SCA2 Series (double acting/single rod). Refer to pages 457 to 469.

Technical data

Refer to page 306 for technical data regarding sliding resistance values.
SCA2-U Series shows a similar trend to the data of “SCM-U Series” on page 306.

SCP*3
CMK2
CMA2
SCM
SCG
SCA2
SCS2
CKV2
CAV2/COVP/N2
SSD2
SSG
SSD
CAT
MDC2
MVC
SMG
MSD/MSDG
FC*
STK
SRL3
SRG3
SRM3
SRT3
MRL2
MRG2
SM-25
ShkAbs
FJ
FK
Spd Contr
Ending

How to order

No switch (built-in magnet for switch)

SCA2-U — LB - 40 ( ) N - 100 ———— M I

With switch (built-in magnet for switch)

SCA2-U — LB - 40 ( ) N - 100 - T0H - R - M I

Ⓐ Mounting *1

Without cushion

Ⓑ Bore size

Ⓒ Port thread

Ⓓ Stroke

Ⓔ Switch model No. *3

Ⓕ Switch quantity *4

Ⓖ Option

Ⓗ Accessory *5

Code	Description
Ⓐ Mounting	
00	Basic
LB	Axial foot
FA	Rod side flange
FB	Head side flange
FC	Head side special flange
CA	Eye bracket
CB	Clevis bracket (pin and snap ring included)
TC	Intermediate trunnion
TA	Rod side trunnion
TB	Head side trunnion
TF	Intermediate supporting hole trunnion (ø40 is not available)
TD	Rod side hole trunnion (ø40 is not available)
TE	Head side hole trunnion (ø40 is not available)

Ⓑ Bore size (mm)	
40	ø40
50	ø50
63	ø63
80	ø80
100	ø100

Ⓒ Port thread	
Blank	Rc thread
N	NPT thread (made-to-order product)
G	G thread (made-to-order product)

Ⓓ Stroke (mm)

Bore size	Stroke *2	Custom stroke
ø40	**1 to 600**	**In 1 mm increments**
ø50	**1 to 600**	
ø63	**1 to 600**	
ø80	**1 to 700**	
ø100	**1 to 800**	

Ⓔ Switch model No.

Refer to the switch model numbers on the next page.

*** Lead wire length**	
Blank	1 m (standard)
3	3 m (option)
5	5 m (option)

Ⓕ Switch quantity	
R	1 on rod side
H	1 on head side
D	2
T	3

Ⓖ Option	
M	Piston rod material (stainless steel)

Ⓗ Accessory	
I	Rod eye
Y	Rod clevis (pin and snap ring included)
B1	Eye bracket
B2	Clevis bracket (pin and snap ring included)
B3	Eye bracket
B4	Trunnion No. 2 bracket (2 pcs./set)

⚠ Precautions for model No. selection

*1 : Mounting bracket will be shipped with the product. (Trunnion are assembled at shipment.)
*2 : Refer to pages 534 and 535 for the min. stroke with switch.
*3 : Switches are shipped with the product.
*4 : When selecting TA, TD, TB or TE mounting, the switch quantity is limited to "H" (1 on head side) for TA and TD, and "R" (1 on rod side) for TB and TE.
*5 : "I" and "Y" cannot be selected together.
*6 : Refer to Ending Page 85 for custom specifications of rod end form.
*7 : Refer to page 448 for combinations of variations/options.

[Example of model No.]

SCA2-U-LB-40N-100-T0H-R-MI

Model: Medium bore size cylinder, double acting/low friction

Ⓐ Mounting : Axial foot
Ⓑ Bore size : ø40 mm
Ⓒ Port thread : Rc thread
Ⓓ Stroke : 100 mm
Ⓔ Switch model No. : Reed T0H switch, lead wire length 1 m
Ⓕ Switch quantity : 1 on rod side
Ⓖ Option : Piston rod material change (stainless steel)
Ⓗ Accessory : Rod eye

[E] Switch model number

T-switch model No.						
Axial lead wire	Radial lead wire	Contact	Voltage AC	Voltage DC	Indicator	Lead wire
T0H*	T0V*	Reed	●	●	1-color LED	2-wire
T5H*	T5V*	Reed	●	●	No indicator lamp	2-wire
T8H*	T8V*	Reed	●	●	1-color LED	2-wire
T1H*	T1V*	Proximity	●		1-color LED	2-wire
T2H*	T2V*	Proximity		●	1-color LED	2-wire
T3H*	T3V*	Proximity		●	1-color LED	3-wire
T2WH*	T2WV*	Proximity		●	2-color LED	2-wire
T2YH*	T2YV*	Proximity		●	2-color LED	2-wire
T3WH*	T3WV*	Proximity		●	2-color LED	3-wire
T3YH*	T3YV*	Proximity		●	2-color LED	3-wire
T3PH*	T3PV*	Proximity		●	1-color LED	3-wire
T2YD*	-	Proximity		●	2-color LED AC magnetic field	2-wire
T2YDT*	-	Proximity		●	2-color LED AC magnetic field	2-wire
T2JH*	T2JV*	Proximity		●	1-color LED off-delay	2-wire

How to order switch

[T-switch]

● Switch body + mounting bracket set

SCA2 - T0H - 40

- T0H: Switch model No. (Item Ⓔ)
- 40: Bore size (Item Ⓑ on page 538)

●Switch body only

SW - T0H

- T0H: Switch model No. (Item Ⓔ)

* Contact CKD when using an environment-friendly T-switch.

● Switch mounting bracket set

SCA2 - TS - 40

- TS: Mounting bracket
- 40: Bore size (Item Ⓑ on page 538)

[T2YD switch]

● Switch body + mounting bracket set

SCA2 - T2YD - 40

- 40: Bore size (Item Ⓑ on page 538)
- T2YD: Switch model No. (Item Ⓔ)

● Switch body only

SW - T2YD

- T2YD: Switch model No. (Item Ⓔ)

● Mounting bracket set

SCA2 - T - 40

- 40: Bore size (Item Ⓑ on page 538)

How to order mounting bracket

Bore size (mm) / Mounting bracket	ø40	ø50	ø63	ø80	ø100
Foot (LB) *2	S1-LB-40	S1-LB-50	S1-LB-63	S1-LB-80	S1-LB-100
Flange (FA/FB)	S1-FA-40	S1-FA-50	S1-FA-63	S1-FA-80	S1-FA-100
Eye bracket (CA)	S1-CA-40	S1-CA-50	S1-CA-63	S1-CA-80	S1-CA-100
Clevis bracket (CB)	S1-CB-40	S1-CB-50	S1-CB-63	S1-CB-80	S1-CB-100

*1 : For material of the mounting bracket, refer to page 456.
*2 : The foot mounting bracket is provided as 2 pcs./set.
*3 : All mounting brackets are supplied with mounting bolts.

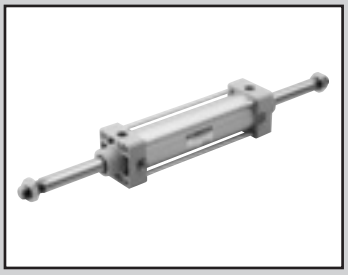

Medium bore size cylinder
Double acting/double rod

SCA2-D Series

● Bore size: ø40/ø50/ø63/ø80/ø100

JIS symbol

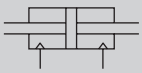

RoHS CAD

Specifications

Item		SCA2-D (Double rod)				
Bore size	mm	ø40	ø50	ø63	ø80	ø100
Actuation		Double acting				
Working fluid		Compressed air				
Max. working pressure	MPa	1.0 (≈150 psi, 10 bar)				
Min. working pressure	MPa	0.1 (≈15 psi, 1 bar)				
Proof pressure	MPa	1.6 (≈230 psi, 16 bar)				
Ambient temperature	°C	-10 (14°F) to 60 (140°F) (no freezing)				
Port size		Rc1/4	Rc3/8		Rc1/2	
Stroke tolerance	mm	$^{+0.9}_{0}$(to 360), $^{+1.4}_{0}$(to 800)				
Working piston speed	mm/s	50 to 1000 (Operate within the allowable absorbed energy.)				
Cushion		Air cushion				
Effective air cushion length	mm	14.6	16.6	16.6	20.6	23.6
Lubrication		Not required (use turbine oil class 1 ISO VG32 if necessary for lubrication)				
Allowable absorbed energy J	Cushioned	4.29	8.37	15.8	27.9	49.8
	Without cushion	0.067	0.079	0.079	0.201	0.301
		Without any cushion, this product cannot absorb large energy generated by an external load. We recommend using an external shock absorber.				

Stroke

Bore size (mm)	Standard stroke (mm)	Max. stroke (mm)	Available stroke (mm)	Min. stroke (mm)
ø40	25/50/75/100/ 150/200/250/ 300/350/400/ 450/500	600	800	1
ø50				
ø63				
ø80		700		
ø100		800		

*1 : The custom stroke is available in 1 mm increments.
*2 : If max. stroke is exceeded, product specifications may not be satisfied depending on the conditions. Refer to Ending Page 69.

Min. stroke with switch

● T0/T5 min. stroke with switches

	Different surface mounting				Same surface mounting				Center trunnion mounting				Rod side trunnion mounting No position detection at rod side stroke end.	Head side trunnion mounting No position detection at head side stroke end.
Switch quantity	1	2	3	4	1	2	3	4	1	2	3	4	1	1
ø40	20(10)	20(20)	40(40)	60(60)	20(10)	60(45)	105(75)	150(105)	110(110)	110(110)	175(145)	175(145)	50(50)	50(50)
ø50	15(10)	20(20)	40(40)	60(60)	15(10)	20(20)	65(50)	65(60)	135(135)	135(135)	135(135)	135(135)	60(60)	60(60)
ø63	15(10)	20(20)	40(40)	60(60)	15(10)	20(20)	70(55)	70(60)	110(95)	110(95)	110(100)	110(100)	50(45)	50(45)
ø80	15(15)	25(25)	45(45)	65(65)	15(15)	25(25)	70(55)	70(65)	115(85)	115(85)	115(105)	115(105)	55(40)	55(40)
ø100	15(15)	25(25)	45(45)	70(70)	15(15)	25(25)	70(55)	70(70)	125(95)	125(95)	125(115)	125(115)	60(45)	60(45)

*1 : The values in ( ) are of T*V (L-shaped lead wire).
*2 : When the stroke is 15 mm or less, the two switches could turn ON at the same time. In this case, adjust switch mounting positions to be as far apart as possible.

● T8 min. stroke with switch

	Different surface mounting				Same surface mounting				Center trunnion mounting				Rod side trunnion mounting No position detection at rod side stroke end.	Head side trunnion mounting No position detection at head side stroke end.
Switch quantity	1	2	3	4	1	2	3	4	1	2	3	4	1	1
ø40	15(10)	20(20)	40(40)	60(60)	15(10)	50(35)	95(65)	140(95)	95(85)	95(85)	155(125)	155(125)	45(40)	45(40)
ø50	10(10)	20(20)	40(40)	60(60)	10(10)	20(20)	70(55)	70(60)	115(115)	115(115)	135(135)	135(135)	50(50)	50(50)
ø63	10(10)	20(20)	40(40)	60(60)	10(10)	20(20)	70(55)	70(60)	95(75)	95(75)	110(110)	110(110)	45(35)	45(35)
ø80	15(15)	25(25)	45(45)	65(65)	15(15)	25(25)	70(55)	70(65)	100(70)	100(70)	115(115)	115(115)	50(35)	50(35)
ø100	15(15)	25(25)	45(45)	65(65)	15(15)	25(25)	70(55)	70(65)	110(80)	110(80)	125(125)	125(125)	55(40)	55(40)

*1 : The values in ( ) are of T*V (L-shaped lead wire).
*2 : When the stroke is 15 mm or less, the two switches could turn ON at the same time. In this case, adjust switch mounting positions to be as far apart as possible.

Min. stroke with switch

● T2/T3 min. stroke with switches

	Different surface mounting				Same surface mounting				Center trunnion mounting				Rod side trunnion mounting No position detection at rod side stroke end.	Head side trunnion mounting No position detection at head side stroke end.
Switch quantity	1	2	3	4	1	2	3	4	1	2	3	4	1	1
ø40	20(10)	20(15)	25(25)	40(40)	20(10)	60(45)	105(75)	150(105)	105(75)	105(75)	165(135)	165(135)	50(35)	50(35)
ø50	15(10)	15(15)	25(25)	40(40)	15(10)	15(15)	60(45)	60(45)	105(75)	105(75)	105(75)	105(75)	45(30)	45(30)
ø63	15(10)	15(15)	25(25)	40(40)	15(10)	15(15)	60(45)	60(45)	110(80)	110(80)	110(85)	110(85)	50(35)	50(35)
ø80	15(10)	15(15)	30(30)	45(45)	15(10)	15(15)	60(45)	60(45)	115(85)	115(85)	115(90)	115(90)	55(40)	55(40)
ø100	10(10)	15(15)	30(30)	45(45)	10(10)	15(15)	60(45)	60(45)	125(95)	125(95)	125(100)	125(100)	60(45)	60(45)

*1 : The values in ( ) are of T*V (L-shaped lead wire).
*2 : When the stroke is 15 mm or less, the two switches could turn ON at the same time. In this case, adjust switch mounting positions to be as far apart as possible.

● T1/T2Y/T3Y/T2YD min. stroke with switches

	Different surface mounting				Same surface mounting				Center trunnion mounting				Rod side trunnion mounting No position detection at rod side stroke end.	Head side trunnion mounting No position detection at head side stroke end.
Switch quantity	1	2	3	4	1	2	3	4	1	2	3	4	1	1
ø40	20(10)	20(15)	25(25)	40(40)	20(10)	60(45)	105(75)	150(105)	105(75)	105(75)	165(135)	165(135)	50(35)	50(35)
ø50	15(10)	15(15)	25(25)	40(40)	15(10)	15(15)	60(45)	60(45)	100(70)	100(70)	100(75)	100(75)	45(30)	45(30)
ø63	15(10)	15(15)	25(25)	40(40)	15(10)	15(15)	60(45)	60(45)	105(75)	105(75)	105(85)	105(85)	50(35)	50(35)
ø80	15(10)	15(15)	30(30)	45(45)	15(10)	15(15)	60(45)	60(45)	110(80)	110(80)	110(90)	110(90)	55(40)	55(40)
ø100	10(10)	15(15)	30(30)	45(45)	10(10)	15(15)	60(45)	60(45)	120(90)	120(90)	120(100)	120(100)	60(45)	60(45)

*1 : The values in ( ) are of T*V (L-shaped lead wire). T2YD does not have an L-shaped lead wire (V).
*2 : When the stroke is 15 mm or less, the two switches could turn ON at the same time. In this case, adjust switch mounting positions to be as far apart as possible.

● T2W/T3W min. stroke with switches

	Different surface mounting				Same surface mounting				Center trunnion mounting				Rod side trunnion mounting No position detection at rod side stroke end.	Head side trunnion mounting No position detection at head side stroke end.
Switch quantity	1	2	3	4	1	2	3	4	1	2	3	4	1	1
ø40	20(5)	20(10)	20(15)	25(25)	20(5)	65(50)	110(80)	155(110)	110(80)	110(80)	170(140)	170(140)	50(35)	50(35)
ø50	20(5)	20(10)	20(15)	20(20)	20(5)	20(10)	65(40)	65(40)	110(80)	110(80)	110(80)	110(80)	50(35)	50(35)
ø63	20(5)	20(10)	20(15)	25(25)	20(5)	20(10)	65(40)	65(40)	115(85)	115(85)	115(85)	115(85)	55(40)	55(40)
ø80	15(5)	15(10)	15(15)	25(25)	15(5)	15(10)	60(40)	60(40)	120(90)	120(90)	120(90)	120(90)	55(40)	55(40)
ø100	10(5)	10(10)	20(20)	25(25)	10(5)	10(10)	60(40)	60(40)	130(100)	130(100)	130(100)	130(100)	60(45)	60(45)

*1 : The values in ( ) are of T*V (L-shaped lead wire).
*2 : When the stroke is 15 mm or less, the two switches could turn ON at the same time. In this case, adjust switch mounting positions to be as far apart as possible.

SCP*3
CMK2
CMA2
SCM
SCG
SCA2
SCS2
CKV2
CAV2/COVP/N2
SSD2
SSG
SSD
CAT
MDC2
MVC
SMG
MSD/MSDG
FC*
STK
SRL3
SRG3
SRM3
SRT3
MRL2
MRG2
SM-25
ShkAbs
FJ
FK
Spd Contr
Ending

Switch specifications (T-switch)

● 1-color/2-color LED/for AC magnetic field proof

Item	2-wire proximity	2-wire proximity			3-wire proximity				2-wire reed							2-wire proximity
	T1H/T1V	T2H/T2V/T2JH/T2JV	T2YH/T2YV	T2WH/T2WV	T3H/T3V	T3PH/T3PV	T3YH/T3YV	T3WH/T3WV	T0H/T0V		T5H/T5V		T8H/T8V			T2YD (*4) T2YDT
Applications	For programming controller, relay, compact solenoid valve	Dedicated for programmable controller			For programmable controller, relay				For programmable controller, relay		For programmable controller, relay (no lamp), serial		For programmable controller, relay			Dedicated for programmable controller
Output method	-				NPN output	PNP output	NPN output	NPN output	-							
Pwr. supp. V.	-				10 to 28 VDC				-							
Load voltage	85 to 265 VAC	10 to 30 VDC		24 VDC ±10%	30 VDC or less				12/24 VDC	110 VAC	5/12/24 VDC	110 VAC	12/24 VDC	110 VAC	220 VAC	24 VDC ±10%
Load current	5 to 100 mA	5 to 20 mA (*3)			100 mA or less		50 mA or less		5 to 50 mA	7 to 20 mA	50 mA or less	20 mA or less	5 to 50 mA	7 to 20 mA	7 to 10 mA	5 to 20 mA
Indicator	LED (Lit when ON)	LED (Lit when ON)	Red/green LED (Lit when ON)	Red/green LED (Lit when ON)	LED (Lit when ON)	Yellow LED (Lit when ON)	Red/green LED (Lit when ON)	Red/green LED (Lit when ON)	LED (Lit when ON)		No indicator lamp		LED (Lit when ON)			Red/green LED (Lit when ON)
Leakage current	≤ 1 mA at 100 VAC, ≤ 2 mA at 200 VAC	1 mA or less			10 μA or less				0 mA							1 mA or less
Weight g	1 m:33 3 m:87 5 m:142	1 m:18 3 m:49 5 m:80	1 m:33 3 m:87 5 m:142	1 m:18 3 m:49 5 m:80	1 m:18 3 m:49 5 m:80		1 m:33 3 m:87 5 m:142	1 m:18 3 m:49 5 m:80	1 m:18 3 m:49 5 m:80				1 m:33 3 m:87 5 m:142			1 m:61 3 m:166 5 m:272

*1 : Refer to Ending Page 1 for detailed switch specifications and dimensions.
*2 : Switches other than the above models, such as switches with connectors, are also available. Refer to Ending Page 1.
*3 : Max. load current: 20 mA at 25°C. The current is lower than 20 mA if the operating ambient temperature around the switch is higher than 25˚C. (5 to 10 mA at 60°C)
*4 : Switch for AC magnetic field (T2YD/T2YDT) cannot be used in DC magnetic field.

Cylinder weight

(Unit: kg)

Bore size (mm)	Product weight when stroke (S) = 0 mm						Switch weight	Mounting bracket weight	Additional weight per S = 100 mm
	Basic (00)	Foot (LB)	Flange (FA, FB)	Eye bracket (CA)	Clevis bracket (CB)	Trunnion (TA, TB, TC)		T type	
ø40	1.15	1.32	1.56	1.47	1.51	1.53	Refer to the weight in the switch specifications.	0.024	0.55
ø50	1.63	1.88	2.12	2.01	2.04	2.17		0.022	0.71
ø63	2.06	2.43	3.15	2.63	2.68	2.91		0.020	0.75
ø80	3.66	4.40	5.52	4.93	5.14	5.00		0.026	1.29
ø100	5.70	6.61	8.44	7.34	7.52	8.27		0.024	1.67

(Example) Product weight of SCA2-D-LB-50B-200-TOH-D

- Product weight for 0 mm stroke·····1.88 kg
- Additional weight for 200 mm stroke·····0.71 x $\frac{200}{100}$ = 1.42 kg
- Weight of 2 TOH switches····· 0.018 x 2 = 0.036 kg
- Weight of 2 mounting brackets····· 0.022 x 2 = 0.044 kg
- Product weight····· 1.88 + 1.42 + 0.036 + 0.044 = 3.380 kg

Theoretical thrust table

(Unit: N)

Bore size (mm)	Operating direction	Working pressure MPa										
		0.1	0.15	0.2	0.3	0.4	0.5	0.6	0.7	0.8	0.9	1.0
ø40	Push/Pull	$1.06x10^2$	$1.58x10^2$	$2.11x10^2$	$3.17x10^2$	$4.22x10^2$	$5.28x10^2$	$6.33x10^2$	$7.39x10^2$	$8.44x10^2$	$9.50x10^2$	$1.06x10^3$
ø50	Push/Pull	$1.65x10^2$	$2.47x10^2$	$3.30x10^2$	$4.95x10^2$	$6.60x10^2$	$8.25x10^2$	$9.90x10^2$	$1.15x10^3$	$1.32x10^3$	$1.48x10^3$	$1.65x10^3$
ø63	Push/Pull	$2.80x10^2$	$4.20x10^2$	$5.61x10^2$	$8.41x10^2$	$1.12x10^3$	$1.40x10^3$	$1.68x10^3$	$1.96x10^3$	$2.24x10^3$	$2.52x10^3$	$2.80x10^3$
ø80	Push/Pull	$4.54x10^2$	$6.80x10^2$	$9.07x10^2$	$1.36x10^3$	$1.81x10^3$	$2.27x10^3$	$2.72x10^3$	$3.17x10^3$	$3.63x10^3$	$4.08x10^3$	$4.54x10^3$
ø100	Push/Pull	$7.15x10^2$	$1.07x10^3$	$1.43x10^3$	$2.14x10^3$	$2.86x10^3$	$3.57x10^3$	$4.29x10^3$	$5.00x10^3$	$5.72x10^3$	$6.43x10^3$	$7.15x10^3$

How to order

No switch (built-in magnet for switch)

SCA2-D - LB - 40 ◯ B - 100 ——— S I

With switch (built-in magnet for switch)

SCA2-D - LB - 40 ◯ B - 100 - T0H - R - S I

Ⓐ Mounting *1

Ⓑ Bore size

Ⓒ Port thread

Ⓓ Cushion

Ⓔ Stroke *2

Ⓕ Switch model No. *4

Ⓖ Switch quantity *5

Ⓗ Option *6 *7

Ⓘ Accessory *10

Code	Description
Ⓐ Mounting	
00	Basic
LB	Axial foot
FA	Rod side flange
FB	Head side flange
TC	Intermediate trunnion
TA	Rod side trunnion
TB	Head side trunnion
TF	Intermediate supporting hole trunnion (ø40 is not available)
TD	Rod side hole trunnion (ø40 is not available)
TE	Head side hole trunnion (ø40 is not available)

Ⓑ Bore size (mm)	
40	ø40
50	ø50
63	ø63
80	ø80
100	ø100

Ⓒ Port thread	
Blank	Rc thread
N	NPT thread (made-to-order product)
G	G thread (made-to-order product)

Ⓓ Cushion	
B	Both sides cushioned
R	Rod side cushioned
H	Head side cushioned
N	Without cushion

Ⓔ Stroke (mm)

Bore size	Stroke *3	Available stroke	Custom stroke
ø40	**1 to 600**	**800**	**In 1 mm increments**
ø50	**1 to 600**	**800**	
ø63	**1 to 600**	**800**	
ø80	**1 to 700**	**800**	
ø100	**1 to 800**	**800**	

Ⓕ Switch model No.

Refer to the switch model numbers on the next page.

*** Lead wire length**	
Blank	1 m (standard)
3	3 m (option)
5	5 m (option)

Ⓖ Switch quantity	
R	1 on rod side
H	1 on head side
D	2
T	3

Ⓗ Option

		Max. ambient temp.	Instantaneous max. temp.
J	Bellows	100°C	200°C
L	Bellows	250°C	400°C
M	Piston rod material (stainless steel)		
Blank	Cushion needle position R (standard)		
S	Cushion needle position S		
T	Cushion needle position T		
P6	Copper and PTFE free (made-to-order product)		

Ⓘ Accessory	
I	Rod eye
Y	Rod clevis (pin and snap ring included)
B4	Trunnion No. 2 bracket (2 pcs./set)

⚠ Precautions for model No. selection

*1 : Mounting bracket will be shipped with the product. (Trunnion are assembled at shipment.)
*2 : If the stroke exceeds the max. stroke, refer to Ending Page 69.
*3 : Refer to pages 540 and 541 for the min. stroke with switch.
*4 : Switches are shipped with the product.
*5 : When selecting TA, TD, TB or TE mounting, the switch quantity is limited to "H" (1 on head side) for TA and TD, and "R" (1 on rod side) for TB and TE.
*6 : The instantaneous max. temperature is the temperature when sparks, cutting chips, etc., instantaneously contact the bellows.
*7 : When selecting TA, TD, TB or TE mounting format, the cushion needle position is blank and fixed at S, with no options available.
*8 : Refer to Ending Page 85 for custom specifications of rod end form.
*9 : Refer to page 448 for combinations of variations/options.
*10 : Two sets are included for accessories I and Y.

[Example of model No.]

SCA2-D-LB-40B-100-T0H-R-SI

Model: Medium bore size cylinder, double acting/double rod

Ⓐ	Mounting	: Axial foot
Ⓑ	Bore size	: ø40 mm
Ⓒ	Port thread	: Rc thread
Ⓓ	Cushion	: Both sides cushioned
Ⓔ	Stroke	: 100 mm
Ⓕ	Switch model No.	: Reed T0H switch, lead wire length 1 m
Ⓖ	Switch quantity	: 1 on rod side
Ⓗ	Option	: Cushion needle position S
Ⓘ	Accessory	: Rod eye

[F] Switch model No.

T-switch model No.						
Axial lead wire	Radial lead wire	Contact	Voltage AC	Voltage DC	Indicator	Lead wire
T0H*	T0V*	Reed	●	●	1-color LED	2-wire
T5H*	T5V*	Reed	●	●	No indicator lamp	2-wire
T8H*	T8V*	Reed	●	●	1-color LED	2-wire
T1H*	T1V*	Proximity	●		1-color LED	2-wire
T2H*	T2V*	Proximity		●	1-color LED	2-wire
T3H*	T3V*	Proximity		●	1-color LED	3-wire
T2WH*	T2WV*	Proximity		●	2-color LED	2-wire
T2YH*	T2YV*	Proximity		●	2-color LED	2-wire
T3WH*	T3WV*	Proximity		●	2-color LED	3-wire
T3YH*	T3YV*	Proximity		●	2-color LED	3-wire
T3PH*	T3PV*	Proximity		●	1-color LED	3-wire
T2YD*	-	Proximity		●	2-color LED AC magnetic field	2-wire
T2YDT*	-	Proximity		●	2-color LED AC magnetic field	2-wire
T2JH*	T2JV*	Proximity		●	1-color LED off-delay	2-wire

How to order switch

[T-switch]

● Switch body + mounting bracket set

SCA2 - T0H - 40

- T0H: Switch model No. (Item Ⓕ)
- 40: Bore size (Item Ⓑ on page 544)

● Switch body only

SW - T0H

- T0H: Switch model No. (Item Ⓕ)

* Contact CKD when using an environment-friendly T-switch.

● Switch mounting bracket set

SCA2 - TS - 40

- TS: Mounting bracket
- 40: Bore size (Item Ⓑ on page 544)

[T2YD switch]

● Switch body + mounting bracket set

SCA2 - T2YD - 40

- T2YD: Switch model No. (Item Ⓕ)
- 40: Bore size (Item Ⓑ on page 544)

● Switch body only

SW - T2YD

- T2YD: Switch model No. (Item Ⓕ)

● Mounting bracket set

SCA2 - T - 40

- 40: Bore size (Item Ⓑ on page 544)

How to order mounting bracket

Bore size (mm) / Mounting bracket	ø40	ø50	ø63	ø80	ø100
Foot (LB) *2	S1-LB-40	S1-LB-50	S1-LB-63	S1-LB-80	S1-LB-100
Flange (FA/FB)	S1-FA-40	S1-FA-50	S1-FA-63	S1-FA-80	S1-FA-100

*1 : For material of the mounting bracket, refer to page 456.
*2 : The foot mounting bracket is provided as 2 pcs./set.
*3 : All mounting brackets are supplied with mounting bolts.

Internal structure and parts list

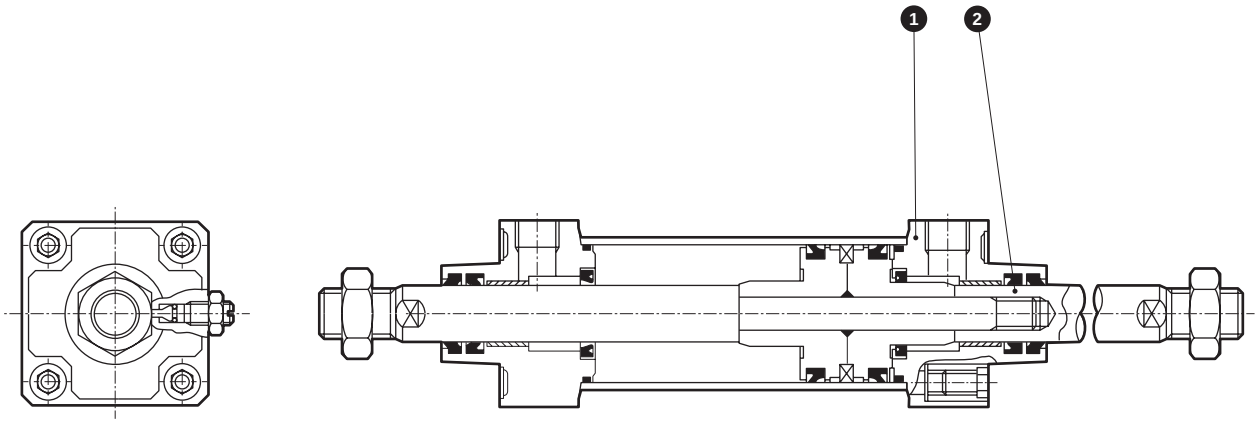

Note: Materials of the parts not listed on the right are the same as those of SCA2 Series (double acting/single rod) on page 456.

No.	Part name	Material	Remarks
1	Rod cover (T)	Aluminum alloy die-casting	Paint
2	Piston rod (2)	Steel	Industrial chrome plating

*Part No. 14 wear ring is not used.

Repair parts list

(Numbering of repair parts follows that in the internal structure of the SCA2 Series (page 456).)

Bore size (mm)	Kit No.	Repair parts No.
ø 40	SCA2-D-40K	3 4 7 8 11 20
ø 50	SCA2-D-50K	
ø 63	SCA2-D-63K	
ø 80	SCA2-D-80K	
ø100	SCA2-D-100K	

Note: Specify the kit No. when placing an order.

Dimensions

● Basic (00)

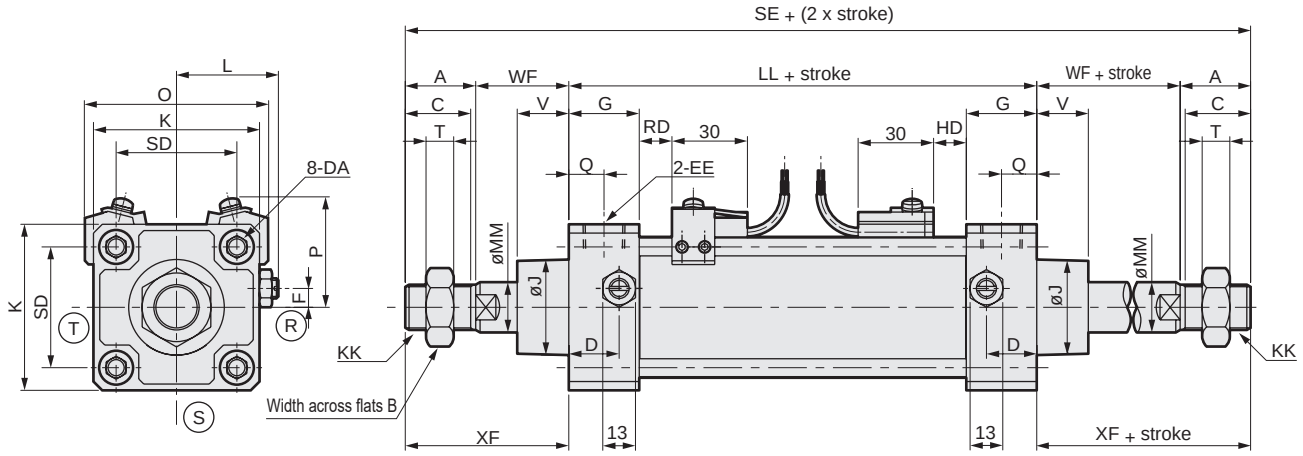

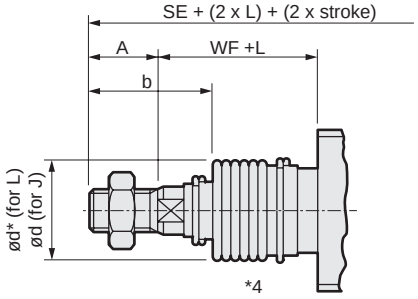

[With bellows]

Code / Bore size (mm)	Basic dimensions																				
	A	B	C	D	DA	EE	F	G	J	K	KK	L	LL	MM	Q	SE	SD	T	V	WF	XF
ø40	22	22	20	18	M8	Rc1/4	7.5	26	31	57	M14x1.5	38 to 39.5	93	16	13	204	40.5	8	18.5	33.5	55.5
ø50	28	27	26	20	M8	Rc3/8	0	28	38	66	M18x1.5	41 to 43.5	101	20	14	231	48	11	20.5	37	65
ø63	28	27	26	22	M8	Rc3/8	0	30	38	80	M18x1.5	47.5 to 50.0	105	20	15	231	59	11	21	35	63
ø80	36	32	34	26	M12	Rc1/2	0	34	43	98	M22x1.5	56 to 59	116	25	17	284	74	13	23.5	48	84
ø100	45	41	43	28	M12	Rc1/2	0	36	51	118	M26x1.5	66 to 69	128	30	18	324	90	16	32	53	98

Code / Bore size (mm)	With switch										With bellows									
	O	P	T0, T5 T2, T3		T1, T2Y T3Y, T2J		T8		T2W, T3W		b	d	d*	L						
			RD	HD	RD	HD	RD	HD	RD	HD				50 or less	Over 50 to 100	Over 100 to 150	Over 150 to 200	Over 200 to 300	Over 300 to 400	Over 400 to 500
ø40	66	41.5	11	11	10	10	5	5	13	13	41	40	40	25.5	41.5	58.5	75.5	108.5	141.5	174.5
ø50	73	43	13	13	12	12	7	7	15	15	47	47	48	22	36	49	63	90	119	146
ø63	85	47	13	13	12	12	7	7	15	15	45	47	48	22	36	49	63	90	119	146
ø80	105	57	14.5	14.5	13.5	13.5	8.5	8.5	16.5	16.5	58.5	53	55	14	26	38	49	72	96	119
ø100	121	63	18.5	18.5	17.5	17.5	12.5	12.5	20.5	20.5	69.5	61	65	20	32	42	53	76	98	120

Code / Bore size (mm)	*3 Over 500
ø40	(Stroke/3.0) + 8
ø50	(Stroke/3.6) + 7.5
ø63	(Stroke/3.6) + 7.5
ø80	(Stroke/4.3) + 2.5
ø100	(Stroke/4.5) + 9

*1 : Ⓡ , Ⓢ and Ⓣ in dicate the cushion needle position.
*2 : The positions for the left and right widths across flats are unspecified.
*3 : For the L dimension, round up below the decimal point.
*4 : Bellows are attached to both rods.
*5 : Refer to page 615 for dimensions of projecting section of T2YD switch.

* Installation dimensions of other mounting are the same as those of the SCA2 (standard). Refer to pages 458 to 469.
* For the dimensions of the accessories, refer to pages 470 and 471.

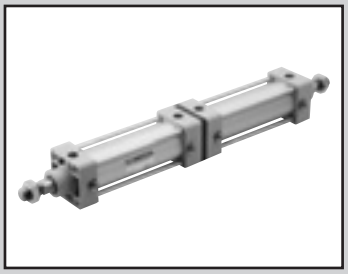

Medium bore size cylinder
Double acting/back to back

SCA2-B Series

● Bore size: ø40/ø50/ø63/ø80/ø100

JIS symbol

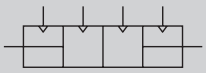

RoHS CAD

Specifications

Item		SCA2-B (back to back)				
Bore size	mm	ø40	ø50	ø63	ø80	ø100
Actuation		Double acting				
Working fluid		Compressed air				
Max. working pressure	MPa	1.0 (≈150 psi, 10 bar)				
Min. working pressure	MPa	0.05 (≈7.3 psi, 0.5 bar)				
Proof pressure	MPa	1.6 (≈230 psi, 16 bar)				
Ambient temperature	°C	-10 (14°F) to 60 (140°F) (no freezing)				
Port size		Rc1/4	Rc3/8		Rc1/2	
Stroke tolerance	mm	$^{+0.9}_{0}$ (to 360), $^{+1.4}_{0}$ (to 800)				
Working piston speed	mm/s	50 to 1000 (Operate within the allowable absorbed energy.)				
Cushion		Air cushion				
Effective air cushion length	mm	14.6	16.6	16.6	20.6	23.6
Lubrication		Not required (use turbine oil class 1 ISO VG32 if necessary for lubrication)				
Allowable absorbed energy	J Cushioned	4.29	8.37	15.8	27.9	49.8
	J Without cushion	0.067	0.079	0.079	0.201	0.301
	J Without cushion	Without any cushion, this product cannot absorb large energy generated by an external load. We recommend using an external shock absorber.				

Stroke

Bore size (mm)	Standard stroke (mm)	Max. stroke (mm)	Min. stroke (mm)
ø40	25/50/75/100/ 150/200/250/ 300/350/400/ 450/500	600	1 (the same for cylinder 1 and cylinder 2)
ø50			
ø63			
ø80		700	
ø100		800	

*1:The custom stroke is available in 1 mm increments.

Min. stroke with switch

● T0/T5 min. stroke with switches

	Different surface mounting				Same surface mounting				Rod side trunnion mounting No position detection at rod side stroke end.	Head side trunnion mounting No position detection at head side stroke end.
Switch quantity	1	2	3	4	1	2	3	4	1	1
ø40	20(10)	20(20)	40(40)	60(60)	20(10)	60(45)	105(75)	150(105)	50(50)	50(50)
ø50	15(10)	20(20)	40(40)	60(60)	15(10)	20(20)	65(50)	65(60)	60(60)	60(60)
ø63	15(10)	20(20)	40(40)	60(60)	15(10)	20(20)	70(55)	70(60)	50(45)	50(45)
ø80	15(15)	25(25)	45(45)	65(65)	15(15)	25(25)	70(55)	70(65)	55(40)	55(40)
ø100	15(15)	25(25)	45(45)	70(70)	15(15)	25(25)	70(55)	70(70)	60(45)	60(45)

*1:The values in ( ) are of T*V (L-shaped lead wire).
*2:When the stroke is 15 mm or less, the two switches could turn ON at the same time. In this case, adjust switch mounting positions to be as far apart as possible.

● T8 min. stroke with switch

	Different surface mounting				Same surface mounting				Rod side trunnion mounting No position detection at rod side stroke end.	Head side trunnion mounting No position detection at head side stroke end.
Switch quantity	1	2	3	4	1	2	3	4	1	1
ø40	15(10)	20(20)	40(40)	60(60)	15(10)	50(35)	95(65)	140(95)	45(40)	45(40)
ø50	10(10)	20(20)	40(40)	60(60)	10(10)	20(20)	70(55)	70(60)	50(50)	50(50)
ø63	10(10)	20(20)	40(40)	60(60)	10(10)	20(20)	70(55)	70(60)	45(35)	45(35)
ø80	15(15)	25(25)	45(45)	65(65)	15(15)	25(25)	70(55)	70(65)	50(35)	50(35)
ø100	15(15)	25(25)	45(45)	65(65)	15(15)	25(25)	70(55)	70(65)	55(40)	55(40)

*1:The values in ( ) are of T*V (L-shaped lead wire).
*2:When the stroke is 15 mm or less, the two switches could turn ON at the same time. In this case, adjust switch mounting positions to be as far apart as possible.

Min. stroke with switch

● T2/T3 min. stroke with switches

	Different surface mounting				Same surface mounting				Rod side trunnion mounting No position detection at rod side stroke end.	Head side trunnion mounting No position detection at head side stroke end.
Switch quantity	1	2	3	4	1	2	3	4	1	1
ø40	20(10)	20(15)	25(25)	40(40)	20(10)	60(45)	105(75)	150(105)	50(35)	50(35)
ø50	15(10)	15(15)	25(25)	40(40)	15(10)	15(15)	60(45)	60(45)	45(30)	45(30)
ø63	15(10)	15(15)	25(25)	40(40)	15(10)	15(15)	60(45)	60(45)	50(35)	50(35)
ø80	15(10)	15(15)	30(30)	45(45)	15(10)	15(15)	60(45)	60(45)	55(40)	55(40)
ø100	10(10)	15(15)	30(30)	45(45)	10(10)	15(15)	60(45)	60(45)	60(45)	60(45)

*1: The values in ( ) are of T*V (L-shaped lead wire).
*2: When the stroke is 15 mm or less, the two switches could turn ON at the same time. In this case, adjust switch mounting positions to be as far apart as possible.

● T1/T2Y/T3Y/T2YD min. stroke with switches

	Different surface mounting				Same surface mounting				Center trunnion mounting				Rod side trunnion mounting No position detection at rod side stroke end.	Head side trunnion mounting No position detection at head side stroke end.
Switch quantity	1	2	3	4	1	2	3	4	1	2	3	4	1	1
ø40	20(10)	20(15)	25(25)	40(40)	20(10)	60(45)	105(75)	150(105)	105(75)	105(75)	165(135)	165(135)	50(35)	50(35)
ø50	15(10)	15(15)	25(25)	40(40)	15(10)	15(15)	60(45)	60(45)	100(70)	100(70)	100(75)	100(75)	45(30)	45(30)
ø63	15(10)	15(15)	25(25)	40(40)	15(10)	15(15)	60(45)	60(45)	105(75)	105(75)	105(85)	105(85)	50(35)	50(35)
ø80	15(10)	15(15)	30(30)	45(45)	15(10)	15(15)	60(45)	60(45)	110(80)	110(80)	110(90)	110(90)	55(40)	55(40)
ø100	10(10)	15(15)	30(30)	45(45)	10(10)	15(15)	60(45)	60(45)	120(90)	120(90)	120(100)	120(100)	60(45)	60(45)

*1: The values in ( ) are of T*V (L-shaped lead wire). T2YD does not have an L-shaped lead wire (V).
*2: When the stroke is 15 mm or less, the two switches could turn ON at the same time. In this case, adjust switch mounting positions to be as far apart as possible.

● T2W/T3W min. stroke with switches

	Different surface mounting				Same surface mounting				Rod side trunnion mounting No position detection at rod side stroke end.	Head side trunnion mounting No position detection at head side stroke end.
Switch quantity	1	2	3	4	1	2	3	4	1	1
ø40	20(5)	20(10)	20(15)	25(25)	20(5)	65(50)	110(80)	155(110)	50(35)	50(35)
ø50	20(5)	20(10)	20(15)	20(20)	20(5)	20(10)	65(40)	65(40)	50(35)	50(35)
ø63	20(5)	20(10)	20(15)	25(25)	20(5)	20(10)	65(40)	65(40)	55(40)	55(40)
ø80	15(5)	15(10)	15(15)	25(25)	15(5)	15(10)	60(40)	60(40)	55(40)	55(40)
ø100	10(5)	10(10)	20(20)	25(25)	10(5)	10(10)	60(40)	60(40)	60(45)	60(45)

*1: The values in ( ) are of T*V (L-shaped lead wire).
*2: When the stroke is 15 mm or less, the two switches could turn ON at the same time. In this case, adjust switch mounting positions to be as far apart as possible.

SCP*3
CMK2
CMA2
SCM
SCG
SCA2
SCS2
CKV2
CAV2/ COVP/N2
SSD2
SSG
SSD
CAT
MDC2
MVC
SMG
MSD/ MSDG
FC*
STK
SRL3
SRG3
SRM3
SRT3
MRL2
MRG2
SM-25
ShkAbs
FJ
FK
Spd Contr
Ending

Switch specifications (T-switch)

● 1-color/2-color LED/for AC magnetic field proof

Item	2-wire proximity	2-wire proximity			3-wire proximity				2-wire reed							2-wire proximity
	T1H/ T1V	T2H/T2V/ T2JH/T2JV	T2YH/ T2YV	T2WH/ T2WV	T3H/ T3V	T3PH/ T3PV	T3YH/ T3YV	T3WH/ T3WV	T0H/T0V		T5H/T5V		T8H/T8V			T2YD (*4) T2YDT
Applications	For programming controller, relay, compact solenoid valve	Dedicated for programmable controller			For programmable controller, relay				For programmable controller, relay		For programmable controller, relay (no lamp), serial		For programmable controller, relay			Dedicated for programmable controller
Output method	-				NPN output	PNP output	NPN output	NPN output	-							
Pwr. supp. V.	-				10 to 28 VDC				-							
Load voltage	85 to 265 VAC	10 to 30 VDC		24 VDC ±10%	30 VDC or less				12/24 VDC	110 VAC	5/12/24 VDC	110 VAC	12/24 VDC	110 VAC	220 VAC	24 VDC ±10%
Load current	5 to 100 mA	5 to 20 mA (*3)			100mA or less		50mA or less		5 to 50 mA	7 to 20 mA	50 mA or less	20 mA or less	5 to 50 mA	7 to 20 mA	7 to 10 mA	5 to 20 mA
Indicator	LED (Lit when ON)	LED (Lit when ON)	Red/green LED (Lit when ON)	Red/green LED (Lit when ON)	LED (Lit when ON)	Yellow LED (Lit when ON)	Red/green LED (Lit when ON)	Red/green LED (Lit when ON)	LED (Lit when ON)		No indicator lamp		LED (Lit when ON)			Red/green LED (Lit when ON)
Leakage current	≤ 1 mA at 100 VAC, ≤ 2 mA at 200 VAC	1 mA or less			10 μA or less				0 mA							1 mA or less
Weight g	1 m:33 3 m:87 5 m:142	1 m:18 3 m:49 5 m:80	1 m:33 3 m:87 5 m:142	1 m:18 3 m:49 5 m:80	1 m:18 3 m:49 5 m:80		1 m:33 3 m:87 5 m:142	1 m:18 3 m:49 5 m:80	1 m:18 3 m:49 5 m:80				1 m:33 3 m:87 5 m:142			1 m:61 3 m:166 5 m:272

*1 : Refer to Ending Page 1 for detailed switch specifications and dimensions.
*2 : Switches other than the above models, such as switches with connectors, are also available. Refer to Ending Page 1.
*3 : Max. load current: 20 mA at 25°C. The current is lower than 20 mA if the operating ambient temperature around the switch is higher than 25˚C. (5 to 10 mA at 60°C)
*4 : Switch for AC magnetic field (T2YD/T2YDT) cannot be used in DC magnetic field.

Cylinder weight

(Unit: kg)

Bore size (mm)	Product weight when stroke (S) = 0 mm						Switch weight	Mounting bracket weight	Additional weight per S = 100 mm
	Basic (00)	Foot (LB)	Flange (FA, FB)	Eye bracket (CA)	Clevis bracket (CB)	Trunnion (TA, TB, TC)		T type	
ø40	1.66	1.83	2.07	1.98	2.02	2.04	Refer to the weight in the switch specifications.	0.024	0.39
ø50	2.40	2.65	2.89	2.78	2.81	2.94		0.022	0.46
ø63	3.20	3.57	4.29	3.77	3.82	4.05		0.020	0.50
ø80	5.20	5.94	7.06	6.47	6.68	6.54		0.026	0.90
ø100	8.40	9.31	11.14	10.04	10.22	10.97		0.024	1.12

(Example) Product weight of SCA2-B-LB-50-B200-TOH-D-B100-TOH-R

- Product weight for 0 mm stroke..... 2.65 kg
- Additional weight for 200 mm S1 stroke..... 0.46 x $\frac{200}{100}$ 0.92 kg
- Additional weight for 100 mm S2 stroke..... 0.46 x $\frac{100}{100}$ 0.46 kg
- Weight of 3 TOH switches..... 0.018 x 3 = 0.054 kg
- Weight of 3 mounting brackets..... 0.022 x 3 = 0.066 kg
- ● Product weight..... 2.65 + 0.92 + 0.46 + 0.054 +0.066 = 4.150 kg

Theoretical thrust table

(Unit: N)

Bore size (mm)	Operating direction	Working pressure MPa											
		0.05	0.1	0.15	0.2	0.3	0.4	0.5	0.6	0.7	0.8	0.9	1.0
ø40	Push	62.8	$1.26x10^2$	$1.88x10^2$	$2.51x10^2$	$3.77x10^2$	$5.03x10^2$	$6.28x10^2$	$7.54x10^2$	$8.80x10^2$	$1.01x10^3$	$1.13x10^3$	$1.26x10^3$
	Pull	52.8	$1.06x10^2$	$1.58x10^2$	$2.11x10^2$	$3.17x10^2$	$4.22x10^2$	$5.28x10^2$	$6.33x10^2$	$7.39x10^2$	$8.44x10^2$	$9.50x10^2$	$1.06x10^3$
ø50	Push	98.2	$1.96x10^2$	$2.95x10^2$	$3.93x10^2$	$5.89x10^2$	$7.85x10^2$	$9.82x10^2$	$1.18x10^3$	$1.37x10^3$	$1.57x10^3$	$1.77x10^3$	$1.96x10^3$
	Pull	82.5	$1.65x10^2$	$2.47x10^2$	$3.30x10^2$	$4.95x10^2$	$6.60x10^2$	$8.25x10^2$	$9.90x10^2$	$1.15x10^3$	$1.32x10^3$	$1.48x10^3$	$1.65x10^3$
ø63	Push	$1.56x10^2$	$3.12x10^2$	$4.68x10^2$	$6.23x10^2$	$9.35x10^2$	$1.25x10^3$	$1.56x10^3$	$1.87x10^3$	$2.18x10^3$	$2.49x10^3$	$2.81x10^3$	$3.12x10^3$
	Pull	$1.40x10^2$	$2.80x10^2$	$4.20x10^2$	$5.61x10^2$	$8.41x10^2$	$1.12x10^3$	$1.40x10^3$	$1.68x10^3$	$1.96x10^3$	$2.24x10^3$	$2.52x10^3$	$2.80x10^3$
ø80	Push	$2.51x10^2$	$5.03x10^2$	$7.54x10^2$	$1.01x10^3$	$1.51x10^3$	$2.01x10^3$	$2.51x10^3$	$3.02x10^3$	$3.52x10^3$	$4.02x10^3$	$4.52x10^3$	$5.03x10^3$
	Pull	$2.27x10^2$	$4.54x10^2$	$6.80x10^2$	$9.07x10^2$	$1.36x10^3$	$1.81x10^3$	$2.27x10^3$	$2.72x10^3$	$3.17x10^3$	$3.63x10^3$	$4.08x10^3$	$4.54x10^3$
ø100	Push	$3.93x10^2$	$7.85x10^2$	$1.18x10^3$	$1.57x10^3$	$2.36x10^3$	$3.14x10^3$	$3.93x10^3$	$4.71x10^3$	$5.50x10^3$	$6.28x10^3$	$7.07x10^3$	$7.85x10^3$
	Pull	$3.57x10^2$	$7.15x10^2$	$1.07x10^3$	$1.43x10^3$	$2.14x10^3$	$2.86x10^3$	$3.57x10^3$	$4.29x10^3$	$5.00x10^3$	$5.72x10^3$	$6.43x10^3$	$7.15x10^3$

SCP*3
CMK2
CMA2
SCM
SCG
SCA2
SCS2
CKV2
CAV2/COVP/N2
SSD2
SSG
SSD
CAT
MDC2
MVC
SMG
MSD/MSDG
FC*
STK
SRL3
SRG3
SRM3
SRT3
MRL2
MRG2
SM-25
ShkAbs
FJ
FK
Spd Contr
Ending

How to order

No switch (built-in magnet for switch)

SCA2-B - LB - 40 - ◯ B 100 ——— ◯ B 50 ——— S I

With switch (built-in magnet for switch)

SCA2-B - LB - 40 - ◯ B 100 - T0H - D - ◯ B 50 - T0H - R - S I

Cylinder 1 stroke S1 — Cylinder 2 stroke S2

Cylinder 1 — Cylinder 2

A Mounting *1

B Bore size

C Port thread — C Port thread

D Cushion — D Cushion

E Stroke *2 — E Stroke

F Switch model No. *4 — F Switch model No.

G Switch quantity *5

H Option *6 *7

I Accessory *10

Code	Description
A Mounting	
00	Basic
LB	Axial foot
FA	Rod side flange
TA	Rod side trunnion
TB	Head side trunnion
TD	Rod side hole trunnion (ø40 is not available)
TE	Head side hole trunnion (ø40 is not available)

B Bore size (mm)	
40	ø40
50	ø50
63	ø63
80	ø80
100	ø100

C Port thread	
Blank	Rc thread
N	NPT thread (made-to-order product)
G	G thread (made-to-order product)

D Cushion	
B	Both sides cushioned
R	Rod side cushioned
H	Head side cushioned
N	Without cushion

E Stroke (mm)

Bore size	Stroke *3	Custom stroke
ø40	1 to 600	In 1 mm increments
ø50	1 to 600	
ø63	1 to 600	
ø80	1 to 700	
ø100	1 to 800	

F Switch model No.

Refer to the switch model numbers on the next page.

*** Lead wire length**	
Blank	1 m (standard)
3	3 m (option)
5	5 m (option)

G Switch quantity	
R	1 on rod side
H	1 on head side
D	2
T	3

H Option

		Max. ambient temp.	Instantaneous max. temp.
J	Bellows	100°C	200°C
L	Bellows	250°C	400°C
M	Piston rod material (stainless steel)		
Blank	Cushion needle position R (standard)		
S	Cushion needle position S		
T	Cushion needle position T		
P6	Copper and PTFE free (made-to-order product)		

I Accessory	
I	Rod eye
Y	Rod clevis (pin and snap ring included)
B4	Trunnion No. 2 bracket (2 pcs./set)

Precautions for model No. selection

*1 : Mounting bracket will be shipped with the product. (Trunnion are assembled at shipment.)
*2 : If the stroke exceeds the max. stroke, refer to Ending Page 69.
*3 : Refer to pages 548 and 549 for the min. stroke with switch.
*4 : Switches are shipped with the product.
*5 : When selecting TA, TD, TB or TE mounting, the switch quantity is limited to "H" (1 on head side) for TA and TD, and "R" (1 on rod side) for TB and TE.
*6 : The instantaneous max. temperature is the temperature when sparks and cutting chips, etc., instantaneously contact the bellows.
*7 : When selecting TA, TD, TB or TE mounting format, the cushion needle position is blank and fixed at S, with no options available.
*8 : Refer to Ending Page 85 for custom specifications of rod end form.
*9 : Refer to page 448 for combination of variations/options.
*10 : Two sets are included for accessories I and Y.

[Example of model No.]

SCA2-B-LB-40-B100-T0H-D-B50-T0H-R-SI

Model: Medium bore size cylinder, double acting/back to back

A Mounting	: Axial foot	
B Bore size	: ø40 mm	
C Port thread	: Rc thread	Cylinder 1
D Cushion	: Both sides cushioned	Cylinder 1
E Stroke S1	: 100 mm	Cylinder 1
F Switch model No.	: Reed T0H switch, lead wire 1m	Cylinder 1
G Switch quantity	: 2	Cylinder 1
C Port thread	: Rc thread	Cylinder 2
D Cushion	: Both sides cushioned	Cylinder 2
E Stroke S2	: 50 mm	Cylinder 2
F Switch model No.	: Reed T0H switch, lead wire 1m	Cylinder 2
G Switch quantity	: 1 on rod side	Cylinder 2
H Option	: Cushion needle position S	
I Accessory	: Rod eye	

1st stage stroke	100 mm indicated by S1
+ 2nd stage stroke	50 mm indicated by S2
Total stroke	150 mm S1 + S2

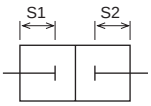

[F] Switch model No.

T-switch model No.

Axial lead wire	Radial lead wire	Contact	Voltage AC	Voltage DC	Indicator	Lead wire
T0H*	T0V*	Reed	●	●	1-color LED	2-wire
T5H*	T5V*	Reed	●	●	No indicator lamp	2-wire
T8H*	T8V*	Reed	●	●	1-color LED	2-wire
T1H*	T1V*	Proximity	●		1-color LED	2-wire
T2H*	T2V*	Proximity		●	1-color LED	2-wire
T3H*	T3V*	Proximity		●	1-color LED	3-wire
T2WH*	T2WV*	Proximity		●	2-color LED	2-wire
T2YH*	T2YV*	Proximity		●	2-color LED	2-wire
T3WH*	T3WV*	Proximity		●	2-color LED	3-wire
T3YH*	T3YV*	Proximity		●	2-color LED	3-wire
T3PH*	T3PV*	Proximity		●	1-color LED	3-wire
T2YD*	-	Proximity		●	2-color LED (AC magnetic field)	2-wire
T2YDT*	-	Proximity		●	2-color LED (AC magnetic field)	2-wire
T2JH*	T2JV*	Proximity		●	Off-delay	2-wire

How to order switch

[T-switch]

● Switch body + mounting bracket set

SCA2 - T0H - 40

- T0H: Switch model No. (Item Ⓕ)
- 40: Bore size (Item Ⓑ on page 552)

● Switch body only

SW - T0H

- T0H: Switch model No. (Item Ⓕ)

* Contact CKD when using an environment-friendly T-switch.

● Switch mounting bracket set

SCA2 - TS - 40

- TS: Mounting bracket
- 40: Bore size (Item Ⓑ on page 552)

[T2YD switch]

● Switch body + mounting bracket set

SCA2 - T2YD - 40

- T2YD: Switch model No. (Item Ⓕ)
- 40: Bore size (Item Ⓑ on page 552)

● Switch body only

SW - T2YD

- T2YD: Switch model No. (Item Ⓕ)

● Mounting bracket set

SCA2 - T - 40

- 40: Bore size (Item Ⓑ on page 552)

How to order mounting bracket

Bore size (mm) / Mounting bracket	ø40	ø50	ø63	ø80	ø100
Foot (LB) *2	S1-LB-40	S1-LB-50	S1-LB-63	S1-LB-80	S1-LB-100
Flange (FA)	S1-FA-40	S1-FA-50	S1-FA-63	S1-FA-80	S1-FA-100

*1 : For material of the mounting bracket, refer to page 456.
*2 : The foot mounting bracket is provided as 2 pcs./set.
*3 : All mounting brackets are supplied with mounting bolts.

Internal structure and parts list

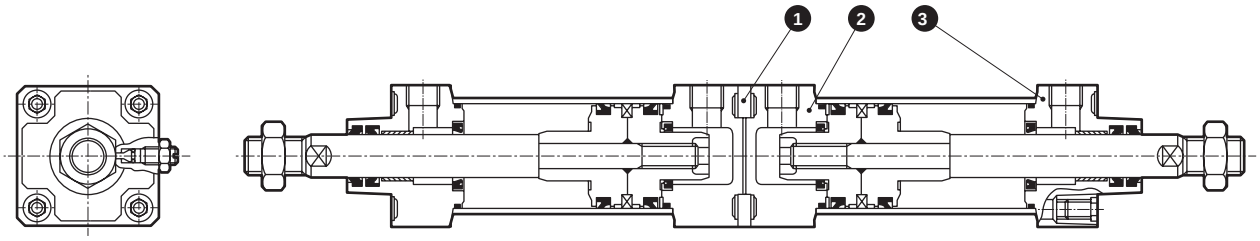

Note: Materials of the parts not listed below are the same as those of SCA2 Series (double acting/single rod) on page 456.

No.	Part name	Material	Remarks	No.	Part name	Material	Remarks
1	Spacer	Steel	Manganese phosphate treatment	3	Rod cover Ⓣ	Aluminum alloy die-casting	Paint
2	Head cover Ⓣ	Aluminum alloy die-casting	Paint				

Repair parts list

(Numbering of repair parts follows that in the internal structure of the SCA2 Series (page 456).)

Bore size (mm)	Kit No.	Repair parts No.
ø40	SCA2-B-40K	3 4 7 8 11 14 20
ø50	SCA2-B-50K	
ø63	SCA2-B-63K	
ø80	SCA2-B-80K	
ø100	SCA2-B-100K	

Note: Specify the kit No. when placing an order.

Applications

When the same strokes are combined,
3 positions are available.

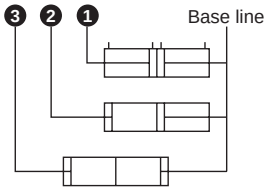

When different strokes are combined,
4 positions are available.

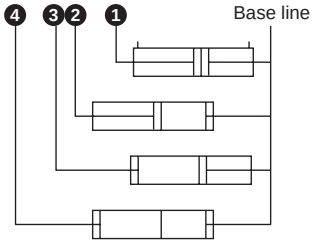

Dimensions

● Back to back

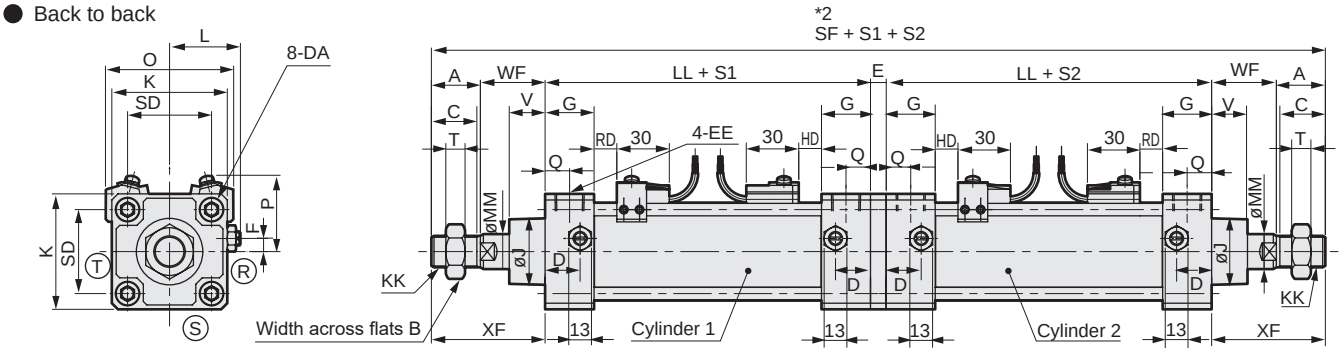

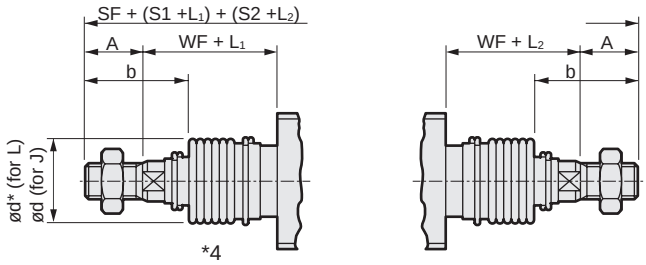

[With bellows]

Code / Bore size (mm)	A	B	C	D	E	F	DA	EE	G	J	K	KK	L	LL	MM	Q	SD	SF	T	V	WF	XF
ø40	22	22	20	18	4.5	7.5	M8	Rc1/4	26	31	57	M14x1.5	38 to 39.5	93	16	13	40.5	301.5	8	18.5	33.5	55.5
ø50	28	27	26	20	9	0	M8	Rc3/8	28	38	66	M18x1.5	41 to 43.5	101	20	14	48	341	11	20.5	37	65
ø63	28	27	26	22	9	0	M8	Rc3/8	30	38	80	M18x1.5	47.5 to 50.0	105	20	15	59	345	11	21	35	63
ø80	36	32	34	26	12	0	M12	Rc1/2	34	43	98	M22x1.5	56 to 59	116	25	17	74	412	13	23.5	48	84
ø100	45	41	43	28	12	0	M12	Rc1/2	36	51	118	M26x1.5	66 to 69	128	30	18	90	464	16	32	53	98

Code	With switch										With bellows										
			T0, T5 T2, T3		T1, T2Y T3Y, T2J		T8		T2W, T3W					L_1,L_2							
Bore size (mm)	O	P	RD	HD	RD	HD	RD	HD	RD	HD	b	d	d*	50 or less	Over 50 to 100	Over 100 to 150	Over 150 to 200	Over 200 to 300	Over 300 to 400	Over 400 to 500	*3 Over 500
ø40	66	41.5	11	11	10	10	5	5	13	13	41	40	40	25.5	41.5	58.5	75.5	108.5	141.5	174.5	(Stroke/3.0) + 8
ø50	73	43	13	13	12	12	7	7	15	15	47	47	48	22	36	49	63	90	119	146	(Stroke/3.6) + 7.5
ø63	85	47	13	13	12	12	7	7	15	15	45	47	48	22	36	49	63	90	119	146	(Stroke/3.6) + 7.5
ø80	105	57	14.5	14.5	13.5	13.5	8.5	8.5	16.5	16.5	58.5	53	55	14	26	38	49	72	96	119	(Stroke/4.3) + 2.5
ø100	121	63	18.5	18.5	17.5	17.5	12.5	12.5	20.5	20.5	69.5	61	65	20	32	42	53	76	98	120	(Stroke/4.5) + 9

*1 : Ⓡ, ⓈⓉ indicates the cushion needle position.
*2 : S1: Cylinder 1 stroke, S2: Cylinder 2 stroke
*3 : For the L_1 and L_2 dimensions, round up below the decimal point.
*4 : Bellows are attached to both rods.
*5 : Refer to page 615 for dimensions of projecting section of T2YD switch.

Installation dimensions of other mounting are the same as those of the SCA2 (standard). Refer to pages 458 to 469.

Installation positions of the flange (mounting: FA) and trunnion (mounting: TA/TB) are as below.

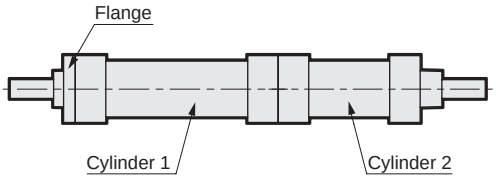

Mounting: FA

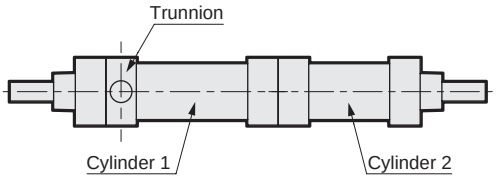

Mounting: TA

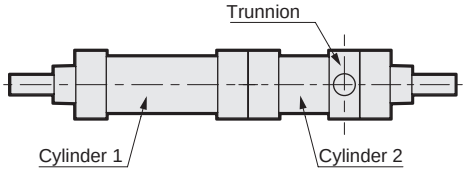

Mounting: TB

*For the dimensions of the accessories, refer to pages 470 and 471.

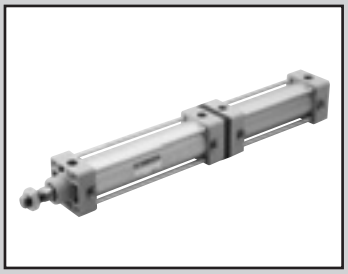

Medium bore size cylinder
Double acting/2-stage

SCA2-W Series

● Bore size: ø40/ø50/ø63/ø80/ø100

JIS symbol

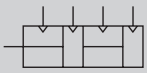

RoHS CAD

Specifications

Item		SCA2-W (2-stage)				
Bore size	mm	ø40	ø50	ø63	ø80	ø100
Actuation		Double acting				
Working fluid		Compressed air				
Max. working pressure	MPa	1.0 (≈150 psi, 10 bar) *1				
Min. working pressure	MPa	0.1 (≈15 psi, 1 bar)				
Proof pressure	MPa	1.6 (≈230 psi, 16 bar)				
Ambient temperature	°C	-10 (14°F) to 60 (140°F) (no freezing)				
Port size		Rc1/4	Rc3/8		Rc1/2	
Stroke tolerance	mm	$^{+0.9}_{0}$ (to 360), $^{+1.4}_{0}$ (to 800)				
Working piston speed	mm/s	50 to 1000 (Operate within the allowable absorbed energy.)				
Cushion		Air cushion				
Effective air cushion length	mm	14.6	16.6	16.6	20.6	23.6
Lubrication		Not required (use turbine oil class 1 ISO VG32 if necessary for lubrication)				
Allowable absorbed energy	J Cushioned	4.29	8.37	15.8	27.9	49.8
	J Without cushion	0.067	0.079	0.079	0.201	0.301
	J Without cushion	Without any cushion, this product cannot absorb large energy generated by an external load. We recommend using an external shock absorber.				

*1: The max. working pressure is 0.5 MPa when S1 and S2 are the same value.

Stroke

Bore size (mm)	Standard stroke (mm)	Max. stroke (mm)	Min. stroke (mm)
ø40	25/50/75/100/150/200/250/300/350/400/450/500	600	2 (Total stroke)
ø50			
ø63			
ø80		700	
ø100		800	

*1: The custom stroke is available in 1 mm increments.

Min. stroke with switch

● T0/T5 min. stroke with switches

	Different surface mounting				Same surface mounting				Rod side trunnion mounting No position detection at rod side stroke end.	Head side trunnion mounting No position detection at head side stroke end.
Switch quantity	1	2	3	4	1	2	3	4	1	1
ø40	20(10)	20(20)	40(40)	60(60)	20(10)	60(45)	105(75)	150(105)	50(50)	50(50)
ø50	15(10)	20(20)	40(40)	60(60)	15(10)	20(20)	65(50)	65(60)	60(60)	60(60)
ø63	15(10)	20(20)	40(40)	60(60)	15(10)	20(20)	70(55)	70(60)	50(45)	50(45)
ø80	15(15)	25(25)	45(45)	65(65)	15(15)	25(25)	70(55)	70(65)	55(40)	55(40)
ø100	15(15)	25(25)	45(45)	70(70)	15(15)	25(25)	70(55)	70(70)	60(45)	60(45)

*1: The values in ( ) are of T*V (L-shaped lead wire).
*2: When the stroke is 15 mm or less, the two switches could turn ON at the same time. In this case, adjust switch mounting positions to be as far apart as possible.

● T8 min. stroke with switch

	Different surface mounting				Same surface mounting				Rod side trunnion mounting No position detection at rod side stroke end.	Head side trunnion mounting No position detection at head side stroke end.
Switch quantity	1	2	3	4	1	2	3	4	1	1
ø40	15(10)	20(20)	40(40)	60(60)	15(10)	50(35)	95(65)	140(95)	45(40)	45(40)
ø50	10(10)	20(20)	40(40)	60(60)	10(10)	20(20)	70(55)	70(60)	50(50)	50(50)
ø63	10(10)	20(20)	40(40)	60(60)	10(10)	20(20)	70(55)	70(60)	45(35)	45(35)
ø80	15(15)	25(25)	45(45)	65(65)	15(15)	25(25)	70(55)	70(65)	50(35)	50(35)
ø100	15(15)	25(25)	45(45)	65(65)	15(15)	25(25)	70(55)	70(65)	55(40)	55(40)

*1: The values in ( ) are of T*V (L-shaped lead wire).
*2: When the stroke is 15 mm or less, the two switches could turn ON at the same time. In this case, adjust switch mounting positions to be as far apart as possible.

Min. stroke with switch

● T2/T3 min. stroke with switches

	Different surface mounting				Same surface mounting				Rod side trunnion mounting No position detection at rod side stroke end.	Head side trunnion mounting No position detection at head side stroke end.
Switch quantity	1	2	3	4	1	2	3	4	1	1
ø40	20(10)	20(15)	25(25)	40(40)	20(10)	60(45)	105(75)	150(105)	50(35)	50(35)
ø50	15(10)	15(15)	25(25)	40(40)	15(10)	15(15)	60(45)	60(45)	45(30)	45(30)
ø63	15(10)	15(15)	25(25)	40(40)	15(10)	15(15)	60(45)	60(45)	50(35)	50(35)
ø80	15(10)	15(15)	30(30)	45(45)	15(10)	15(15)	60(45)	60(45)	55(40)	55(40)
ø100	10(10)	15(15)	30(30)	45(45)	10(10)	15(15)	60(45)	60(45)	60(45)	60(45)

*1: The values in ( ) are of T*V (L-shaped lead wire).
*2: When the stroke is 15 mm or less, the two switches could turn ON at the same time. In this case, adjust switch mounting positions to be as far apart as possible.

● T1/T2Y/T3Y/T2YD min. stroke with switches

	Different surface mounting				Same surface mounting				Center trunnion mounting				Rod side trunnion mounting No position detection at rod side stroke end.	Head side trunnion mounting No position detection at head side stroke end.
Switch quantity	1	2	3	4	1	2	3	4	1	2	3	4	1	1
ø40	20(10)	20(15)	25(25)	40(40)	20(10)	60(45)	105(75)	150(105)	105(75)	105(75)	165(135)	165(135)	50(35)	50(35)
ø50	15(10)	15(15)	25(25)	40(40)	15(10)	15(15)	60(45)	60(45)	100(70)	100(70)	100(75)	100(75)	45(30)	45(30)
ø63	15(10)	15(15)	25(25)	40(40)	15(10)	15(15)	60(45)	60(45)	105(75)	105(75)	105(85)	105(85)	50(35)	50(35)
ø80	15(10)	15(15)	30(30)	45(45)	15(10)	15(15)	60(45)	60(45)	110(80)	110(80)	110(90)	110(90)	55(40)	55(40)
ø100	10(10)	15(15)	30(30)	45(45)	10(10)	15(15)	60(45)	60(45)	120(90)	120(90)	120(100)	120(100)	60(45)	60(45)

*1: The values in ( ) are of T*V (L-shaped lead wire). T2YD does not have an L-shaped lead wire (V).
*2: When the stroke is 15 mm or less, the two switches could turn ON at the same time. In this case, adjust switch mounting positions to be as far apart as possible.

● T2W/T3W min. stroke with switches

	Different surface mounting				Same surface mounting				Rod side trunnion mounting No position detection at rod side stroke end.	Head side trunnion mounting No position detection at head side stroke end.
Switch quantity	1	2	3	4	1	2	3	4	1	1
ø40	20(5)	20(10)	20(15)	25(25)	20(5)	65(50)	110(80)	155(110)	50(35)	50(35)
ø50	20(5)	20(10)	20(15)	20(20)	20(5)	20(10)	65(40)	65(40)	50(35)	50(35)
ø63	20(5)	20(10)	20(15)	25(25)	20(5)	20(10)	65(40)	65(40)	55(40)	55(40)
ø80	15(5)	15(10)	15(15)	25(25)	15(5)	15(10)	60(40)	60(40)	55(40)	55(40)
ø100	10(5)	10(10)	20(20)	25(25)	10(5)	10(10)	60(40)	60(40)	60(45)	60(45)

*1: The values in ( ) are of T*V (L-shaped lead wire).
*2: When the stroke is 15 mm or less, the two switches could turn ON at the same time. In this case, adjust switch mounting positions to be as far apart as possible.

SCP*3
CMK2
CMA2
SCM
SCG
SCA2
SCS2
CKV2
CAV2/COVP/N2
SSD2
SSG
SSD
CAT
MDC2
MVC
SMG
MSD/MSDG
FC*
STK
SRL3
SRG3
SRM3
SRT3
MRL2
MRG2
SM-25
ShkAbs
FJ
FK
Spd Contr
Ending

Switch specifications (T-switch)

● 1-color/2-color LED/for AC magnetic field proof

Item	2-wire proximity	2-wire proximity			3-wire proximity				2-wire reed							2-wire proximity
	T1H/T1V	T2H/T2V/T2JH/T2JV	T2YH/T2YV	T2WH/T2WV	T3H/T3V	T3PH/T3PV	T3YH/T3YV	T3WH/T3WV	T0H/T0V		T5H/T5V		T8H/T8V			T2YD (*4) T2YDT
Applications	For programming controller, relay, compact solenoid valve	Dedicated for programmable controller			For programmable controller, relay				For programmable controller, relay		For programmable controller, relay (no lamp), serial		For programmable controller, relay			Dedicated for programmable controller
Output method	-				NPN output	PNP output	NPN output	NPN output	-							
Pwr. supp. V.	-				10 to 28 VDC				-							
Load voltage	85 to 265 VAC	10 to 30 VDC		24 VDC ±10%	30 VDC or less				12/24 VDC	110 VAC	5/12/24 VDC	110 VAC	12/24 VDC	110 VAC	220 VAC	24 VDC ±10%
Load current	5 to 100 mA	5 to 20 mA (*3)			100 mA or less		50 mA or less		5 to 50 mA	7 to 20 mA	50 mA or less	20 mA or less	5 to 50 mA	7 to 20 mA	7 to 10 mA	5 to 20 mA
Indicator	LED (Lit when ON)	LED (Lit when ON)	Red/green LED (Lit when ON)	Red/green LED (Lit when ON)	LED (Lit when ON)	Yellow LED (Lit when ON)	Red/green LED (Lit when ON)	Red/green LED (Lit when ON)	LED (Lit when ON)		No indicator lamp		LED (Lit when ON)			Red/green LED (Lit when ON)
Leakage current	≤ 1 mA at 100 VAC, ≤ 2 mA at 200 VAC	1 mA or less			10 μA or less				0 mA							1 mA or less
Weight g	1 m:33 3 m:87 5 m:142	1 m:18 3 m:49 5 m:80	1 m:33 3 m:87 5 m:142	1 m:18 3 m:49 5 m:80	1 m:18 3 m:49 5 m:80		1 m:33 3 m:87 5 m:142	1 m:18 3 m:49 5 m:80	1 m:18 3 m:49 5 m:80				1 m:33 3 m:87 5 m:142			1 m:61 3 m:166 5 m:272

*1 : Refer to Ending Page 1 for detailed switch specifications and dimensions.
*2 : Switches other than the above models, such as switches with connectors, are also available. Refer to Ending Page 1.
*3 : Max. load current: 20 mA at 25°C. The current is lower than 20 mA if the operating ambient temperature around the switch is higher than 25˚C. (5 to 10 mA at 60°C)
*4 : Switch for AC magnetic field (T2YD/T2YDT) cannot be used in DC magnetic field.

Cylinder weight

(Unit: kg)

Bore size (mm)	Product weight when stroke (S) = 0 mm						Switch weight	Mounting bracket weight	Added weight/ S=100 mm
	Basic (00)	Foot (LB)	Flange (FA, FB)	Eye bracket (CA)	Clevis bracket (CB)	Trunnion (TA, TB, TC)		T type	
ø40	1.34	1.51	1.75	1.66	1.70	1.72	Refer to the weight in the switch specifications.	0.024	0.78
ø50	1.97	2.22	2.46	2.35	2.38	2.51		0.022	0.92
ø63	2.74	3.11	3.83	3.31	3.36	3.59		0.020	1.00
ø80	4.14	4.88	6.00	5.41	5.62	5.48		0.026	1.80
ø100	6.90	7.81	9.64	8.54	8.72	9.47		0.024	2.24

(Example) Product weight of SCA2-W-LB-50-B200-T0H-D-B100-TOH-R

- Product weight for 0 mm stroke ····· 2.22 kg
- Additional weight for 200 mm S1 stroke ····· $0.46 \times \frac{200}{100} = 0.92$ kg
- Additional weight for 100 mm S2 stroke ····· $0.46 \times \frac{100}{100} = 0.46$ kg
- Weight of 3 TOH switches ····· 0.018 x 3 = 0.054 kg
- Weight of 3 mounting brackets ····· 0.022 x 3 = 0.066 kg
- Product weight ····· 2.22 + 0.92 + 0.46 + 0.054 +0.066 = 3.720 kg

SCP*3
CMK2
CMA2
SCM
SCG
SCA2
SCS2
CKV2
CAV2/COVP/N2
SSD2
SSG
SSD
CAT
MDC2
MVC
SMG
MSD/MSDG
FC*
STK
SRL3
SRG3
SRM3
SRT3
MRL2
MRG2
SM-25
ShkAbs
FJ
FK
Spd Contr
Ending

How to order

Total stroke S1 — 1st stage stroke S2

No switch (built-in magnet for switch)

SCA2-W - LB - 40 - ◯ B 150 ——— ◯ B 50 ——— S I

With switch (built-in magnet for switch)

SCA2-W - LB - 40 - ◯ B 150 - T0H - D - ◯ B 50 - T0H - R - S I

Cylinder 1 — Cylinder 2

Ⓐ Mounting *1

Ⓑ Bore size

Ⓒ Port thread — Ⓒ Port thread

Ⓓ Cushion — Ⓓ Cushion

Ⓔ Stroke *2 — Ⓔ Stroke *3

Ⓕ Switch model No. *5 — Ⓕ Switch model No.

Ⓖ Switch quantity *6 — Ⓖ Switch quantity

Ⓗ Option *7 *8

Ⓘ Accessory *9

Precautions for model No. selection

*1 : Mounting bracket will be shipped with the product. (Trunnion are assembled at shipment.)
*2 : If the stroke exceeds the max. stroke, refer to Ending Page 69.
*3 : The max. stroke of S2 (1st stage) is 200 mm.
*4 : Refer to pages 556 and 557 for the min. stroke with switch.
*5 : Switches are shipped with the product.
*6 : When selecting TA, TD, TB or TE mounting, the switch quantity is limited to "H" (1 on head side) for TA and TD, and "R" (1 on rod side) for TB and TE.
*7 : The instantaneous max. temperature is the temperature when sparks and cutting chips, etc., instantaneously contact the bellows.
*8 : When selecting TA, TD, TB or TE mounting format, the cushion needle position is blank and fixed at S, with no options available.
*9 : "I" and "Y" cannot be selected together.
*10 : Refer to Ending Page 85 for custom specifications of rod end form.
*11 : Refer to page 448 for combinations of variations/options.

[Example of model No.]

SCA2-W-LB-40-B150-T0H-D-B50-T0H-R-SI

Model: Medium bore size cylinder, double acting/2-stage

Cylinder 1:
- Ⓐ Mounting : Axial foot
- Ⓑ Bore size : ø40 mm
- Ⓒ Port thread : Rc thread
- Ⓓ Cushion : Both sides cushioned
- Ⓔ Stroke S1 : 150 mm
- Ⓕ Switch model No. : Reed T0H switch, Lead wire 1m

Cylinder 2:
- Ⓖ Switch quantity : 2
- Ⓒ Port thread : Rc thread
- Ⓓ Cushion : Both sides cushioned
- Ⓔ Stroke S2 : 50 mm
- Ⓕ Switch model No. : Reed T0H switch, Lead wire 1m

- Ⓖ Switch quantity : 1 on rod side
- Ⓗ Option : Cushion needle position S
- Ⓘ Accessory : Rod eye

1st stage stroke	50 mm indicated by S2
+ 2nd stage stroke	100 mm
Total stroke	150 mm indicated by S1

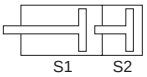

Code	Description
Ⓐ Mounting	
00	Basic
LB	Axial foot
FA	Rod side flange
FB	Head side flange
FC	Head side special flange
CA	Eye bracket
CB	Clevis bracket (pin and snap ring included)
TA	Rod side trunnion
TB	Head side trunnion
TD	Rod side hole trunnion (ø40 is not available)
TE	Head side hole trunnion (ø40 is not available)
Ⓑ Bore size (mm)	
40	ø40
50	ø50
63	ø63
80	ø80
100	ø100
Ⓒ Port thread	
Blank	Rc thread
N	NPT thread (made-to-order product)
G	G thread (made-to-order product)
Ⓓ Cushion	
B	Both sides cushioned
R	Rod side cushioned
H	Head side cushioned
N	Without cushion

Ⓔ Stroke (mm)

Bore size	Stroke *4	Custom stroke
ø40	2 to 600	In 1 mm increments
ø50	2 to 600	
ø63	2 to 600	
ø80	2 to 700	
ø100	2 to 800	

Ⓕ Switch model No.

Refer to the switch model numbers on the next page.

*** Lead wire length**	
Blank	1 m (standard)
3	3 m (option)
5	5 m (option)
Ⓖ Switch quantity	
R	1 on rod side
H	1 on head side
D	2
T	3

Ⓗ Option

		Max. ambient temp.	Instantaneous max. temp.
J	Bellows	100°C	200°C
L	Bellows	250°C	400°C
M	Piston rod material (stainless steel)		
Blank	Cushion needle position R (standard)		
S	Cushion needle position S		
T	Cushion needle position T		
P6	Copper and PTFE free (made-to-order product)		

Ⓘ Accessory	
I	Rod eye
Y	Rod clevis (pin and snap ring included)
B1	Eye bracket
B2	Clevis bracket (pin and snap ring included)
B3	Eye bracket
B4	Trunnion No. 2 bracket (2 pcs./set)

[F] Switch model No.

T-switch model No.						
Axial lead wire	Radial lead wire	Contact	Voltage AC	Voltage DC	Indicator	Lead wire
T0H*	T0V*	Reed	●	●	1-color LED	2-wire
T5H*	T5V*	Reed	●	●	No indicator lamp	2-wire
T8H*	T8V*	Reed	●	●	1-color LED	2-wire
T1H*	T1V*	Proximity	●		1-color LED	2-wire
T2H*	T2V*	Proximity		●	1-color LED	2-wire
T3H*	T3V*	Proximity		●	1-color LED	3-wire
T2WH*	T2WV*	Proximity		●	2-color LED	2-wire
T2YH*	T2YV*	Proximity		●	2-color LED	2-wire
T3WH*	T3WV*	Proximity		●	2-color LED	3-wire
T3YH*	T3YV*	Proximity		●	2-color LED	3-wire
T3PH*	T3PV*	Proximity		●	1-color LED	3-wire
T2YD*	-	Proximity		●	2-color LED (AC magnetic field)	2-wire
T2YDT*	-	Proximity		●	2-color LED (AC magnetic field)	2-wire
T2JH*	T2JV*	Proximity		●	Off-delay	2-wire

How to order switch

[T-switch]

● Switch body + mounting bracket set

SCA2 - T0H - 40

Switch model No. (Item Ⓕ)
Bore size (Item Ⓑ on page 560)

● Switch body only

SW - T0H

Switch model No. (Item Ⓕ)

* Contact CKD when using an environment-friendly T-switch.

● Switch mounting bracket set

SCA2 - TS - 40

Mounting bracket
Bore size (Item Ⓑ on page 560)

[T2YD switch]

● Switch body + mounting bracket set

SCA2 - T2YD - 40

Switch model No. (Item Ⓕ)
Bore size (Item Ⓑ on page 560)

● Switch body only

SW - T2YD

Switch model No. (Item Ⓕ)

● Mounting bracket set

SCA2 - T - 40

Bore size (Item Ⓑ on page 560)

How to order mounting bracket

Bore size (mm) / Mounting bracket	ø40	ø50	ø63	ø80	ø100
Foot (LB) *2	S1-LB-40	S1-LB-50	S1-LB-63	S1-LB-80	S1-LB-100
Flange (FA/FB)	S1-FA-40	S1-FA-50	S1-FA-63	S1-FA-80	S1-FA-100
Eye bracket (CA)	S1-CA-40	S1-CA-50	S1-CA-63	S1-CA-80	S1-CA-100
Clevis bracket (CB)	S1-CB-40	S1-CB-50	S1-CB-63	S1-CB-80	S1-CB-100

*1 : For material of the mounting bracket, refer to page 456.
*2 : The foot mounting bracket is provided as 2 pcs./set.
*3 : All mounting brackets are supplied with mounting bolts.

Internal structure and parts list

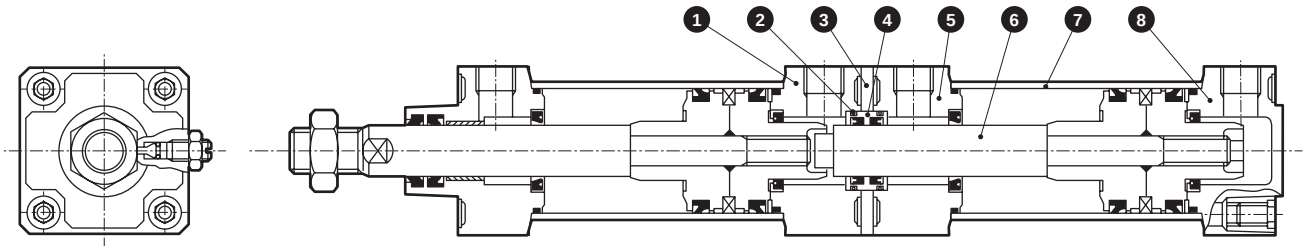

Note: Materials of the parts not listed below are the same as those of SCA2 Series (double acting/single rod) on page 456.

No.	Part name	Material	Remarks	No.	Part name	Material	Remarks
1	Intermediate cover H	Aluminum alloy die-casting	Paint	5	Intermediate cover R	Aluminum alloy die-casting	Paint
2	Metal gasket	Nitrile rubber	O-ring	6	Piston rod (2)	Steel	Industrial chrome plating
3	Spacer	Steel	Manganese phosphate treatment	7	Cylinder tube	Aluminum alloy	Hard alumite treatment
4	Rod metal	Cast iron	Manganese phosphate treatment	8	Head cover	Aluminum alloy die-casting	Paint

Repair parts list

(Numbering of consumable parts follows that in the internal structure of the SCA2 Series (page 456). ❷ alone is the part No. in the figure above.)

Bore size (mm)	Kit No.	Repair parts No.
ø 40	SCA2-W-40K	(❷) ❸ ❹ ❼ ❽ ⓫ ⓮ ⓴
ø 50	SCA2-W-50K	
ø 63	SCA2-W-63K	
ø 80	SCA2-W-80K	
ø100	SCA2-W-100K	

Note: Specify the kit No. when placing an order.

Applications

Pressure setting: P2 > P1

- 1st stage push
  Keeping port 4 pressurized, pressurize port 1.
- 2nd stage push
  Keeping port 1 pressurized, pressurize port 3.

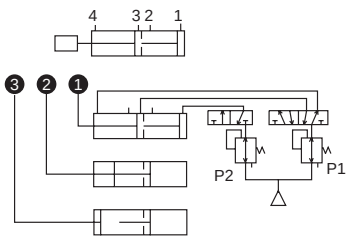

P2 = P1 is allowed depending on the load direction.When using a single acting cylinder with free fall load, ports 2 and 4 in the upper figure and ports 2 and 3 in the lower figure are breathing holes.
Cushion performance will be better when all ports are piped even if piping them is not necessary (port 2 in this case).

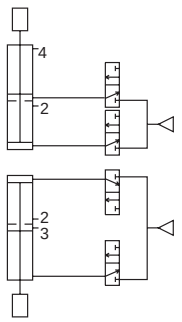

Dimensions

● Basic (00)

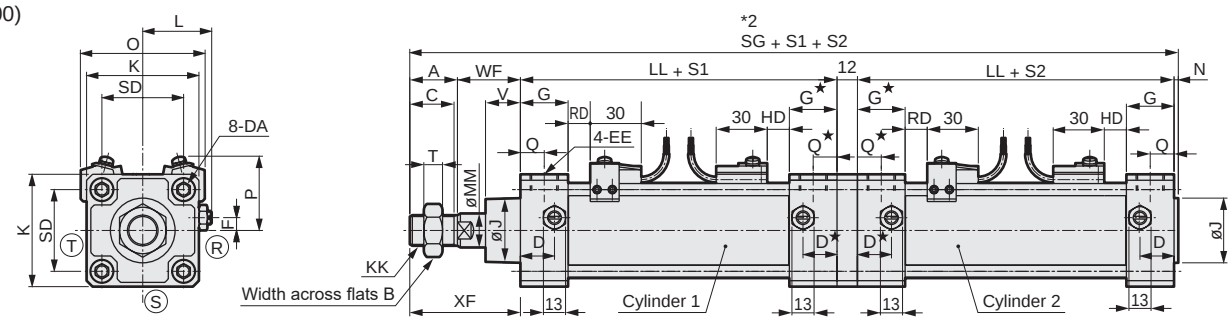

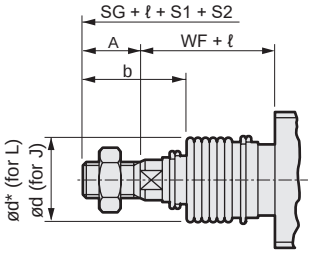

[With bellows]

Code / Bore size (mm)	A	B	C	D	D*	DA	EE	F	G	G*	J	K	KK	L	LL	MM	N	Q	Q*	SD	SG	T
ø40	22	22	20	18	17.5	M 8	RC1/4	7.5	26	25.5	31	57	M14x1.5	38 to 39.5	92.5	16	2	13	12.5	40.5	254.5	8
ø50	28	27	26	20	19.5	M 8	RC3/8	0	28	27.5	38	66	M18x1.5	41 to 43.5	100.5	20	2.5	14	13.5	48	280.5	11
ø63	28	27	26	22	21.5	M 8	RC3/8	0	30	29.5	38	80	M18x1.5	47.5 to 50.0	104.5	20	3	15	14.5	59	287	11
ø80	36	32	34	26	25.5	M12	RC1/2	0	34	33.5	43	98	M22x1.5	56 to 59	115.5	25	3.5	17	16.5	74	330.5	13
ø100	45	41	43	28	27.5	M12	RC1/2	0	36	35.5	51	118	M26x1.5	66 to 69	127.5	30	4	18	17.5	90	369	16

Code / Bore size (mm)	With switch													With bellows										
	V	WF	XF	O	P	T0, T5 T2, T3		T1, T2Y T3Y, T2J		T8		T2W, T3W		b	d	d*	ℓ							
						RD	HD	RD	HD	RD	HD	RD	HD				50 or less	Over 50 to 100	Over 100 to 150	Over 150 to 200	Over 200 to 300	Over 300 to 400	Over 400 to 500	*3 Over 500
ø40	18.5	33.5	55.5	66	41.5	11	11	10	10	5	5	13	13	41	40	40	25.5	41.5	58.5	75.5	108.5	141.5	174.5	(Stroke/3.0) + 8
ø50	20.5	37	65	73	43	13	13	12	12	7	7	15	15	47	47	48	22	36	49	63	90	119	146	(Stroke/3.6) + 7.5
ø63	21	35	63	85	47	13	13	12	12	7	7	15	15	45	47	48	22	36	49	63	90	119	146	(Stroke/3.6) + 7.5
ø80	23.5	48	84	105	57	14.5	14.5	13.5	13.5	8.5	8.5	16.5	16.5	58.5	53	55	14	26	38	49	72	96	119	(Stroke/4.3) + 2.5
ø100	32	53	98	121	63	18.5	18.5	17.5	17.5	12.5	12.5	20.5	20.5	69.5	61	65	20	32	42	53	76	98	120	(Stroke/4.5) + 9

*1 : Ⓡ, Ⓢ and Ⓣ indicate the cushion needle position.
*2 : S1 = cylinder 1 stroke (total stroke), S2 = cylinder 2 stroke (1st stage stroke)
*3 : For the ℓ dimension, round up below the decimal point.
*4 : Refer to page 615 for dimensions of projecting section of T2YD switch.

Installation dimensions of other mounting are the same as those of the SCA2 (standard). Refer to pages 458 to 469.
Installation positions of the flange (mounting: FA/FB) and trunnion (mounting: TA/TB) are as below.

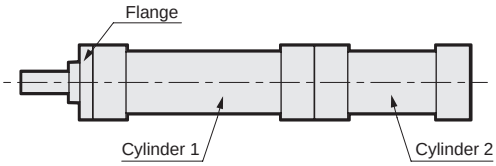

Mounting: FA

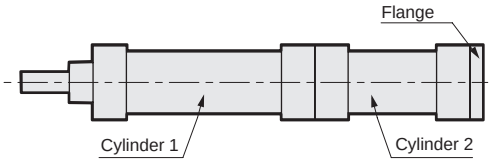

Mounting: FB

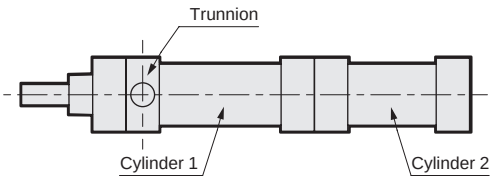

Mounting: TA

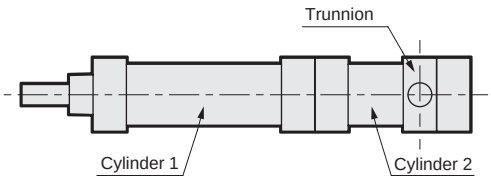

Mounting: TB

* For the dimensions of the accessories, refer to pages 470 and 471.

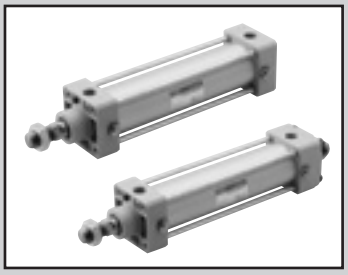

Medium bore size cylinder
Double acting/steel tube

SCA2-K Series

● Bore size: ø40/ø50/ø63/ø80/ø100

JIS symbol

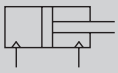

RoHS CAD

Specifications

Item		SCA2-K (steel tube)				
Bore size	mm	ø40	ø50	ø63	ø80	ø100
Actuation		Double acting				
Working fluid		Compressed air				
Max. working pressure	MPa	1.0 (≈150 psi, 10 bar)				
Min. working pressure	MPa	0.05 (≈7.3 psi, 0.5 bar)				
Proof pressure	MPa	1.6 (≈230 psi, 16 bar)				
Ambient temperature	°C	-10 (14°F) to 60 (140°F) (no freezing)				
Port size		Rc1/4	Rc3/8		Rc1/2	
Stroke tolerance	mm	$^{+0.9}_{0}$(to 360), $^{+1.4}_{0}$(to 800)				
Working piston speed	mm/s	50 to 1000 (Operate within the allowable absorbed energy.)				
Cushion		Air cushion				
Effective air cushion length	mm	14.6	16.6	16.6	20.6	23.6
Lubrication		Not required (use turbine oil class 1 ISO VG32 if necessary for lubrication)				
Allowable absorbed energy J — Cushioned		4.29	8.37	15.8	27.9	49.8
Allowable absorbed energy J — Without cushion		0.067	0.079	0.079	0.201	0.301
		Without any cushion, this product cannot absorb large energy generated by an external load. We recommend using an external shock absorber.				

Stroke

Bore size (mm)	Standard stroke (mm)	Max. stroke (mm)	Available stroke (mm)	Min. stroke (mm)
ø40	25/50/75/100/150/200/250/300/350/400/450/500	600	1600	1
ø50			1900	
ø63				
ø80		700		
ø100		800		

*1 : The custom stroke is available in 1 mm increments.
*2 : If max. stroke is exceeded, product specifications may not be satisfied depending on the conditions. Refer to Ending Page 69.

Cylinder weight

(Unit: kg)

Bore size (mm)	Product weight when stroke (S) = 0 mm						Added weight/ S = 100 mm
	Basic (00)	Foot (LB)	Flange (FA, FB)	Eye bracket (CA)	Clevis bracket (CB)	Trunnion (TA, TB, TC)	
ø40	1.01	1.18	1.42	1.33	1.37	1.39	0.56
ø50	1.42	1.67	1.91	1.80	1.83	1.96	0.72
ø63	1.85	2.22	2.94	2.42	2.47	2.70	0.82
ø80	2.94	3.68	4.80	4.21	4.42	4.28	1.37
ø100	4.64	5.55	7.38	6.28	6.46	7.21	1.70

(Example) Product weight of SCA2-K-LB-50B-200
- Product weight for 0 mm stroke.....1.67 kg
- Additional weight for 200 mm stroke .....0.72 x $\frac{200}{100}$ = 1.44 kg
- Product weight.....1.67 + 1.44 = 3.11 kg

Theoretical thrust table

(Unit: N)

Bore size (mm)	Operating direction	Working pressure MPa											
		0.05	0.1	0.15	0.2	0.3	0.4	0.5	0.6	0.7	0.8	0.9	1.0
ø40	Push	62.8	$1.26x10^2$	$1.88x10^2$	$2.51x10^2$	$3.77x10^2$	$5.03x10^2$	$6.28x10^2$	$7.54x10^2$	$8.80x10^2$	$1.01x10^3$	$1.13x10^3$	$1.26x10^3$
	Pull	52.8	$1.06x10^2$	$1.58x10^2$	$2.11x10^2$	$3.17x10^2$	$4.22x10^2$	$5.28x10^2$	$6.33x10^2$	$7.39x10^2$	$8.44x10^2$	$9.50x10^2$	$1.06x10^3$
ø50	Push	98.2	$1.96x10^2$	$2.95x10^2$	$3.93x10^2$	$5.89x10^2$	$7.85x10^2$	$9.82x10^2$	$1.18x10^3$	$1.37x10^3$	$1.57x10^3$	$1.77x10^3$	$1.96x10^3$
	Pull	82.5	$1.65x10^2$	$2.47x10^2$	$3.30x10^2$	$4.95x10^2$	$6.60x10^2$	$8.25x10^2$	$9.90x10^2$	$1.15x10^3$	$1.32x10^3$	$1.48x10^3$	$1.65x10^3$
ø63	Push	$1.56x10^2$	$3.12x10^2$	$4.68x10^2$	$6.23x10^2$	$9.35x10^2$	$1.25x10^3$	$1.56x10^3$	$1.87x10^3$	$2.18x10^3$	$2.49x10^3$	$2.81x10^3$	$3.12x10^3$
	Pull	$1.40x10^2$	$2.80x10^2$	$4.20x10^2$	$5.61x10^2$	$8.41x10^2$	$1.12x10^3$	$1.40x10^3$	$1.68x10^3$	$1.96x10^3$	$2.24x10^3$	$2.52x10^3$	$2.80x10^3$
ø80	Push	$2.51x10^2$	$5.03x10^2$	$7.54x10^2$	$1.01x10^3$	$1.51x10^3$	$2.01x10^3$	$2.51x10^3$	$3.02x10^3$	$3.52x10^3$	$4.02x10^3$	$4.52x10^3$	$5.03x10^3$
	Pull	$2.27x10^2$	$4.54x10^2$	$6.80x10^2$	$9.07x10^2$	$1.36x10^3$	$1.81x10^3$	$2.27x10^3$	$2.72x10^3$	$3.17x10^3$	$3.63x10^3$	$4.08x10^3$	$4.54x10^3$
ø100	Push	$3.93x10^2$	$7.85x10^2$	$1.18x10^3$	$1.57x10^3$	$2.36x10^3$	$3.14x10^3$	$3.93x10^3$	$4.71x10^3$	$5.50x10^3$	$6.28x10^3$	$7.07x10^3$	$7.85x10^3$
	Pull	$3.57x10^2$	$7.15x10^2$	$1.07x10^3$	$1.43x10^3$	$2.14x10^3$	$2.86x10^3$	$3.57x10^3$	$4.29x10^3$	$5.00x10^3$	$5.72x10^3$	$6.43x10^3$	$7.15x10^3$

How to order

SCA2-K - LB - 40 ( ) B - 100 - S I

- Ⓐ Mounting *1
- Ⓑ Bore size
- Ⓒ Port thread
- Ⓓ Cushion
- Ⓔ Stroke *2
- Ⓕ Option *4 *5
- Ⓖ Accessory *6

Code	Description
Ⓐ Mounting	
00	Basic
LB	Axial foot
FA	Rod side flange
FB	Head side flange
FC	Head side special flange
CA	Eye bracket
CB	Clevis bracket (pin and snap ring included)
TC	Intermediate trunnion
TA	Rod side trunnion
TB	Head side trunnion
TF	Intermediate supporting hole trunnion (ø40 is not available)
TD	Rod side hole trunnion (ø40 is not available)
TE	Head side hole trunnion (ø40 is not available)
Ⓑ Bore size (mm)	
40	ø40
50	ø50
63	ø63
80	ø80
100	ø100
Ⓒ Port thread	
Blank	Rc thread
N	NPT thread (made-to-order product)
G	G thread (made-to-order product)
Ⓓ Cushion	
B	Both sides cushioned
R	Rod side cushioned
H	Head side cushioned
N	Without cushion

Ⓔ Stroke (mm)

Bore size	Stroke	Available stroke	Custom stroke
ø40	**1 to 600**	**1600**	**In 1 mm increments**
ø50	**1 to 600**	**1900**	
ø63	**1 to 600**	**1900**	
ø80	**1 to 700**	**1900**	
ø100	**1 to 800**	**1900**	

Ⓕ Option

		Max. ambient temp.	Instantaneous max. temp.
J	Bellows	100°C	200°C
L	Bellows	250°C	400°C
M	Piston rod material (stainless steel)		
Blank	Cushion needle position R (standard)		
S	Cushion needle position S		
T	Cushion needle position T		
P6	Copper and PTFE free (made-to-order product)		

Ⓖ Accessory	
I	Rod eye
Y	Rod clevis (pin and snap ring included)
B1	Eye bracket
B2	Clevis bracket (pin and snap ring included)
B3	Eye bracket
B4	Trunnion No. 2 bracket (2 pcs./set)

⚠ Precautions for model No. selection

*1 : Mounting bracket will be shipped with the product. (Trunnion are assembled at shipment.)
*2 : If the stroke exceeds the max. stroke, refer to Ending Page 69.
*3 : The instantaneous max. temperature is the temperature when sparks and cutting chips, etc., instantaneously contact the bellows.
*4 : "I" and "Y" cannot be selected together.
*5 : When selecting TA, TD, TB or TE mounting format, the cushion needle position is blank and fixed at S, with no options available.
*6 : Refer to Ending Page 85 for custom specifications of rod end form.
*7 : Refer to page 448 for combinations of variations/options.

[Example of model No.]
SCA2-K-LB-40B-100-SI

Model: Medium bore size cylinder, double acting/standard single rod/steel tube

- Ⓐ Mounting : Axial foot
- Ⓑ Bore size : ø40 mm
- Ⓒ Port thread : Rc thread
- Ⓓ Cushion : Both sides cushioned
- Ⓔ Stroke : 100 mm
- Ⓕ Option : Cushion needle position S
- Ⓖ Accessory : Rod eye

How to order mounting bracket

Bore size (mm) / Mounting bracket	ø40	ø50	ø63	ø80	ø100
Foot (LB) *2	S1-LB-40	S1-LB-50	S1-LB-63	S1-LB-80	S1-LB-100
Flange (FA/FB)	S1-FA-40	S1-FA-50	S1-FA-63	S1-FA-80	S1-FA-100
Eye bracket (CA)	S1-CA-40	S1-CA-50	S1-CA-63	S1-CA-80	S1-CA-100
Clevis bracket (CB)	S1-CB-40	S1-CB-50	S1-CB-63	S1-CB-80	S1-CB-100

*1 : For material of the mounting bracket, refer to page 456.
*2 : The foot mounting bracket is provided as 2 pcs./set.
*3 : All mounting brackets are supplied with mounting bolts.

Internal structure and parts list

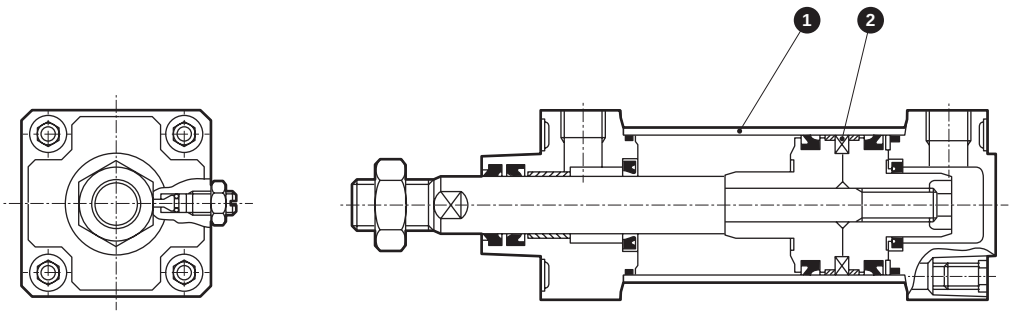

No.	Part name	Material	Remarks
1	Cylinder tube	Steel	Industrial chrome plating
2	Piston ring	Steel	Zinc chromate

- Note: Materials of the parts not listed on the right are the same as those of SCA2 Series (double acting/standard single rod) on page 456.
- Tube O.D. of the ø50 to ø100 bore sizes differ from that of the double acting/standard single rod. Therefore, the trunnion bracket is not compatible with the double acting/standard single rod.

Repair parts list

Numbering of repair parts follows that in the internal structure of the SCA2 Series (page 456).

Bore size (mm)	Kit No.	Repair parts No.
ø 40	SCA2-K-40K	3 4 7 8 11 14 20
ø 50	SCA2-K-50K	
ø 63	SCA2-K-63K	
ø 80	SCA2-K-80K	
ø100	SCA2-K-100K	

Note: Specify the kit No. when placing an order.

Dimensions

● Basic (00)

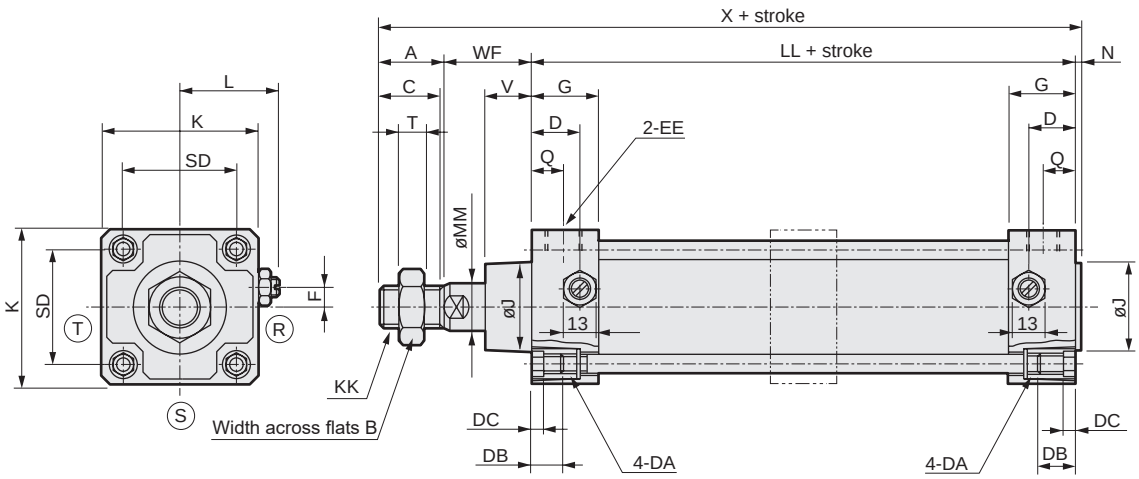

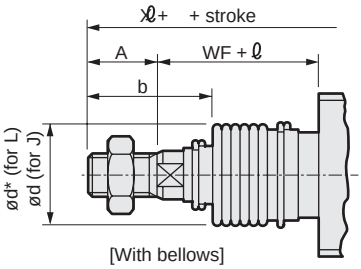

[With bellows]

Code	Basic (00) Basic dimensions																						
Bore size (mm)	A	B	C	D	DA	DB	DC	EE	F	G	J	K	KK	L	LL	MM	N	Q	SD	T	V	WF	X
ø40	22	22	20	18	M8	12	4	Rc1/4	7.5	26	31	57	M14x1.5	38 to 39.5	93	16	2	13	40.5	8	18.5	33.5	150.5
ø50	28	27	26	20	M8	12	4	Rc3/8	0	28	38	66	M18x1.5	41 to 43.5	101	20	2.5	14	48	11	20.5	37	168.5
ø63	28	27	26	22	M8	12	4	Rc3/8	0	30	38	80	M18x1.5	47.5 to 50	105	20	3	15	59	11	21	35	171
ø80	36	32	34	26	M12	16	5	Rc1/2	0	34	43	98	M22x1.5	56 to 59	116	25	3.5	17	74	13	23.5	48	203.5
ø100	45	41	43	28	M12	16	5	Rc1/2	0	36	51	118	M26x1.5	66 to 69	128	30	4	18	90	16	32	53	230

Code	With bellows										
				ℓ							
Bore size (mm)	b	d	d*	50 or less	Over 50 to 100	Over 100 to 150	Over 150 to 200	Over 200 to 300	Over 300 to 400	Over 400 to 500	*2: Over 500
ø40	41	40	40	25.5	41.5	58.5	75.5	108.5	141.5	174.5	(Stroke/3.0) + 8
ø50	47	47	48	22	36	49	63	90	119	146	(Stroke/3.6) + 7.5
ø63	45	47	48	22	36	49	63	90	119	146	(Stroke/3.6) + 7.5
ø80	58.5	53	55	14	26	38	49	72	96	119	(Stroke/4.3) + 2.5
ø100	69.5	61	65	20	32	42	53	76	98	120	(Stroke/4.5) + 9

*1 : Ⓡ,Ⓢ and Ⓣ indicate the cushion needle position.
*2 : For the ℓ dimension, round up below the decimal point.
*3 : Non-sag block (2-dashed line) will be added depending on the stroke.
Refer to page 614 for details on dimensions.

* Installation dimensions of other mounting are the same as those of the SCA2 (standard). Refer to pages 458 to 469.
* For the dimensions of the accessories, refer to pages 470 and 471.

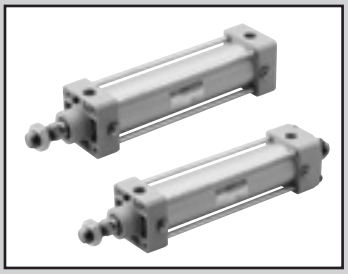

Medium bore size cylinder
Double acting/low hydraulic

SCA2-H Series

● Bore size: ø40/ø50/ø63/ø80/ø100

JIS symbol

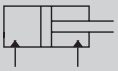

RoHS CAD

Specifications

Item		SCA2-H (Low hydraulic)				
Bore size	mm	ø40	ø50	ø63	ø80	ø100
Actuation		Double acting				
Working fluid	*1	Hydraulic fluid				
Max. working pressure	MPa	1.0 (≈150 psi, 10 bar)				
Min. working pressure	MPa	0.2 (≈29 psi, 2 bar)		0.15 (≈22 psi, 1.5 bar)		
Proof pressure	MPa	1.6 (≈230 psi, 16 bar)				
Ambient temperature	°C	5 (41°F) to 50 (122°F)				
Port size		Rc1/4	Rc3/8		Rc1/2	
Stroke tolerance	mm	$^{+0.9}_{0}$ (to 360), $^{+1.4}_{0}$ (to 800)				
Cushion		Cushioned				
Effective air cushion length	mm	14.6	16.6	16.6	20.6	23.6
Allowable surge pressure	MPa	2.9 (cushioned), 4.9 (no cushion)				
Allowable absorbed energy	J Cushioned	The cushioning of the low hydraulic cylinder cannot absorb large energy. We recommend using an external shock absorber.				
	J Without cushion	0.067	0.079	0.079	0.201	0.301
		Without any cushion, this product cannot absorb large energy generated by an external load. We recommend using an external shock absorber.				

*1: Hydraulic fluid of viscosity 40 mm²/s is recommended at working oil temperature.
For oil, use Fuji Kosan/Fukkol Hydrol x 22 or equivalent oil such as MITSUBISHI/Diamond Power Fluid 18, Showa-Shell/SHELL Tellus Oil 22, ESSO/Univis J26, Mobile DTE22, Cosmohydro HV22, JX Nippon Oil & Energy Corporation/Highlandwide 22 or Idemitsu/Daphne Super Hydro 22 WR.

Stroke

Bore size (mm)	Standard stroke (mm)	Max. stroke (mm)	Min. stroke (mm)
ø40	25/50/75/100/150/200/250/300/350/400/450/500	600	1
ø50			
ø63			
ø80		700	
ø100		800	

*1: The custom stroke is available in 1 mm increments.

Min. stroke with switch

● T0/T5 min. stroke with switches

	Different surface mounting				Same surface mounting				Center trunnion mounting				Rod side trunnion mounting No position detection at rod side stroke end.	Head side trunnion mounting No position detection at head side stroke end.
Switch quantity	1	2	3	4	1	2	3	4	1	2	3	4	1	1
ø40	20(10)	20(20)	40(40)	60(60)	20(10)	60(45)	105(75)	150(105)	110(110)	110(110)	175(145)	175(145)	50(50)	50(50)
ø50	15(10)	20(20)	40(40)	60(60)	15(10)	20(20)	65(50)	65(60)	135(135)	135(135)	135(135)	135(135)	60(60)	60(60)
ø63	15(10)	20(20)	40(40)	60(60)	15(10)	20(20)	70(55)	70(60)	110(95)	110(95)	110(100)	110(100)	50(45)	50(45)
ø80	15(15)	25(25)	45(45)	65(65)	15(15)	25(25)	70(55)	70(65)	115(85)	115(85)	115(105)	115(105)	55(40)	55(40)
ø100	15(15)	25(25)	45(45)	70(70)	15(15)	25(25)	70(55)	70(70)	125(95)	125(95)	125(115)	125(115)	60(45)	60(45)

*1: The values in ( ) are of T*V (L-shaped lead wire).
*2: When the stroke is 15 mm or less, the two switches could turn ON at the same time. In this case, adjust switch mounting positions to be as far apart as possible.

● T8 min. stroke with switch

	Different surface mounting				Same surface mounting				Center trunnion mounting				Rod side trunnion mounting No position detection at rod side stroke end.	Head side trunnion mounting No position detection at head side stroke end.
Switch quantity	1	2	3	4	1	2	3	4	1	2	3	4	1	1
ø40	15(10)	20(20)	40(40)	60(60)	15(10)	50(35)	95(65)	140(95)	95(85)	95(85)	155(125)	155(125)	45(40)	45(40)
ø50	10(10)	20(20)	40(40)	60(60)	10(10)	20(20)	70(55)	70(60)	115(115)	115(115)	135(135)	135(135)	50(50)	50(50)
ø63	10(10)	20(20)	40(40)	60(60)	10(10)	20(20)	70(55)	70(60)	95(75)	95(75)	110(110)	110(110)	45(35)	45(35)
ø80	15(15)	25(25)	45(45)	65(65)	15(15)	25(25)	70(55)	70(65)	100(70)	100(70)	115(115)	115(115)	50(35)	50(35)
ø100	15(15)	25(25)	45(45)	65(65)	15(15)	25(25)	70(55)	70(65)	110(80)	110(80)	125(125)	125(125)	55(40)	55(40)

*1: The values in ( ) are of T*V (L-shaped lead wire).
*2: When the stroke is 15 mm or less, the two switches could turn ON at the same time. In this case, adjust switch mounting positions to be as far apart as possible.

Min. stroke with switch

● T2/T3 min. stroke with switches

	Different surface mounting				Same surface mounting				Center trunnion mounting				Rod side trunnion mounting No position detection at rod side stroke end.	Head side trunnion mounting No position detection at head side stroke end.
Switch quantity	1	2	3	4	1	2	3	4	1	2	3	4	1	1
ø40	20(10)	20(15)	25(25)	40(40)	20(10)	60(45)	105(75)	150(105)	105(75)	105(75)	165(135)	165(135)	50(35)	50(35)
ø50	15(10)	15(15)	25(25)	40(40)	15(10)	15(15)	60(45)	60(45)	105(75)	105(75)	105(75)	105(75)	45(30)	45(30)
ø63	15(10)	15(15)	25(25)	40(40)	15(10)	15(15)	60(45)	60(45)	110(80)	110(80)	110(85)	110(85)	50(35)	50(35)
ø80	15(10)	15(15)	30(30)	45(45)	15(10)	15(15)	60(45)	60(45)	115(85)	115(85)	115(90)	115(90)	55(40)	55(40)
ø100	10(10)	15(15)	30(30)	45(45)	10(10)	15(15)	60(45)	60(45)	125(95)	125(95)	125(100)	125(100)	60(45)	60(45)

*1: The values in ( ) are of T*V (L-shaped lead wire).
*2: When the stroke is 15 mm or less, the two switches could turn ON at the same time. In this case, adjust switch mounting positions to be as far apart as possible.

● T1/T2Y/T3Y/T2YD min. stroke with switches

	Different surface mounting				Same surface mounting				Center trunnion mounting				Rod side trunnion mounting No position detection at rod side stroke end.	Head side trunnion mounting No position detection at head side stroke end.
Switch quantity	1	2	3	4	1	2	3	4	1	2	3	4	1	1
ø40	20(10)	20(15)	25(25)	40(40)	20(10)	60(45)	105(75)	150(105)	105(75)	105(75)	165(135)	165(135)	50(35)	50(35)
ø50	15(10)	15(15)	25(25)	40(40)	15(10)	15(15)	60(45)	60(45)	100(70)	100(70)	100(75)	100(75)	45(30)	45(30)
ø63	15(10)	15(15)	25(25)	40(40)	15(10)	15(15)	60(45)	60(45)	105(75)	105(75)	105(85)	105(85)	50(35)	50(35)
ø80	15(10)	15(15)	30(30)	45(45)	15(10)	15(15)	60(45)	60(45)	110(80)	110(80)	110(90)	110(90)	55(40)	55(40)
ø100	10(10)	15(15)	30(30)	45(45)	10(10)	15(15)	60(45)	60(45)	120(90)	120(90)	120(100)	120(100)	60(45)	60(45)

*1: The values in ( ) are of T*V (L-shaped lead wire). T2YD does not have an L-shaped lead wire (V).
*2: When the stroke is 15 mm or less, the two switches could turn ON at the same time. In this case, adjust switch mounting positions to be as far apart as possible.

● T2W/T3W min. stroke with switches

	Different surface mounting				Same surface mounting				Center trunnion mounting				Rod side trunnion mounting No position detection at rod side stroke end.	Head side trunnion mounting No position detection at head side stroke end.
Switch quantity	1	2	3	4	1	2	3	4	1	2	3	4	1	1
ø40	20(5)	20(10)	20(15)	25(25)	20(5)	65(50)	110(80)	155(110)	110(80)	110(80)	170(140)	170(140)	50(35)	50(35)
ø50	20(5)	20(10)	20(15)	20(20)	20(5)	20(10)	65(40)	65(40)	110(80)	110(80)	110(80)	110(80)	50(35)	50(35)
ø63	20(5)	20(10)	20(15)	25(25)	20(5)	20(10)	65(40)	65(40)	115(85)	115(85)	115(85)	115(85)	55(40)	55(40)
ø80	15(5)	15(10)	15(15)	25(25)	15(5)	15(10)	60(40)	60(40)	120(90)	120(90)	120(90)	120(90)	55(40)	55(40)
ø100	10(5)	10(10)	20(20)	25(25)	10(5)	10(10)	60(40)	60(40)	130(100)	130(100)	130(100)	130(100)	60(45)	60(45)

*1: The values in ( ) are of T*V (L-shaped lead wire).
*2: When the stroke is 15 mm or less, the two switches could turn ON at the same time. In this case, adjust switch mounting positions to be as far apart as possible.

SCP*3
CMK2
CMA2
SCM
SCG
SCA2
SCS2
CKV2
CAV2/COVP/N2
SSD2
SSG
SSD
CAT
MDC2
MVC
SMG
MSD/MSDG
FC*
STK
SRL3
SRG3
SRM3
SRT3
MRL2
MRG2
SM-25
ShkAbs
FJ
FK
Spd Contr
Ending

Switch specifications (T-switch)

● 1-color/2-color LED/for AC magnetic field proof

Item	2-wire proximity	2-wire proximity			3-wire proximity				2-wire reed							2-wire proximity
	T1H/T1V	T2H/T2V/T2JH/T2JV	T2YH/T2YV	T2WH/T2WV	T3H/T3V	T3PH/T3PV	T3YH/T3YV	T3WH/T3WV	T0H/T0V		T5H/T5V		T8H/T8V			T2YD (*4) T2YDT
Applications	For programming controller, relay, compact solenoid valve	Dedicated for programmable controller			For programmable controller, relay				For programmable controller, relay		For programmable controller, relay (no lamp), serial		For programmable controller, relay			Dedicated for programmable controller
Output method	-				NPN output	PNP output	NPN output	NPN output	-							
Pwr. supp. V.	-				10 to 28 VDC				-							
Load voltage	85 to 265 VAC	10 to 30 VDC		24 VDC ±10%	30 VDC or less				12/24 VDC	110 VAC	5/12/24 VDC	110 VAC	12/24 VDC	110 VAC	220 VAC	24 VDC ±10%
Load current	5 to 100 mA	5 to 20 mA (*3)			100 mA or less		50 mA or less		5 to 50 mA	7 to 20 mA	50 mA or less	20 mA or less	5 to 50 mA	7 to 20 mA	7 to 10 mA	5 to 20 mA
Indicator	LED (Lit when ON)	LED (Lit when ON)	Red/green LED (Lit when ON)	Red/green LED (Lit when ON)	LED (Lit when ON)	Yellow LED (Lit when ON)	Red/green LED (Lit when ON)	Red/green LED (Lit when ON)	LED (Lit when ON)		No indicator lamp		LED (Lit when ON)			Red/green LED (Lit when ON)
Leakage current	≤ 1 mA at 100 VAC, ≤ 2 mA at 200 VAC	1 mA or less			10 μA or less				0 mA							1 mA or less
Weight g	1 m:33 3 m:87 5 m:142	1 m:18 3 m:49 5 m:80	1 m:33 3 m:87 5 m:142	1 m:18 3 m:49 5 m:80	1 m:18 3 m:49 5 m:80		1 m:33 3 m:87 5 m:142	1 m:18 3 m:49 5 m:80	1 m:18 3 m:49 5 m:80				1 m:33 3 m:87 5 m:142			1 m:61 3 m:166 5 m:272

*1 : Refer to Ending Page 1 for detailed switch specifications and dimensions.
*2 : Switches other than the above models, such as switches with connectors, are also available. Refer to Ending Page 1.
*3 : Max. load current: 20 mA at 25°C. The current is lower than 20 mA if the operating ambient temperature around the switch is higher than 25˚C. (5 to 10 mA at 60°C)
*4 : Switch for AC magnetic field (T2YD/T2YDT) cannot be used in DC magnetic field.

Cylinder weight

(Unit: kg)

Bore size (mm)	Product weight when stroke (S) = 0 mm							Switch weight	Mounting bracket weight	Additional weight per S = 100 mm
	Basic (OO)	Foot (LB)	Flange (FA, FB)	Special flange (FC)	Eye bracket (CA)	Clevis bracket (CB)	Trunnion (TA, TB, TC)		T type	
ø40	0.83	1.00	1.24	0.92	1.15	1.19	1.21	Refer to the weight in the switch specifications.	0.024	0.39
ø50	1.20	1.45	1.69	1.31	1.58	1.61	1.74		0.022	0.46
ø63	1.60	1.97	2.69	1.78	2.17	2.22	2.45		0.020	0.50
ø80	2.60	3.34	4.46	2.96	3.87	4.08	3.94		0.026	0.90
ø100	4.20	5.11	6.94	4.75	5.84	6.02	6.77		0.024	1.12

(Example) Product weight of SCA2-H-LB-50B-200-TOH-D

- Product weight for 0 mm stroke ..... 1.45 kg
- Additional weight for 200 mm stroke ..... $0.46 \times \frac{200}{100} = 0.92$ kg
- Weight of 2 TOH switches ..... 0.018 x 2 = 0.036 kg
- Weight of 2 mounting brackets ..... 0.022 x 2 = 0.044 kg
- Product weight ..... 1.45 + 0.92 + 0.036 + 0.044 = 2.450 kg

Theoretical thrust table

(Unit: N)

Bore size (mm)	Operating direction	Working pressure MPa									
		0.15	0.2	0.3	0.4	0.5	0.6	0.7	0.8	0.9	1.0
ø40	Push	–	2.51×10^2	3.77×10^2	5.03×10^2	6.28×10^2	7.54×10^2	8.80×10^2	1.01×10^3	1.13×10^3	1.26×10^3
	Pull	–	2.11×10^2	3.17×10^2	4.22×10^2	5.28×10^2	6.33×10^2	7.39×10^2	8.44×10^2	9.50×10^2	1.06×10^3
ø50	Push	–	3.93×10^2	5.89×10^2	7.85×10^2	9.82×10^2	1.18×10^3	1.37×10^3	1.57×10^3	1.77×10^3	1.96×10^3
	Pull	–	3.30×10^2	4.95×10^2	6.60×10^2	8.25×10^2	9.90×10^2	1.15×10^3	1.32×10^3	1.48×10^3	1.65×10^3
ø63	Push	4.68×10^2	6.23×10^2	9.35×10^2	1.25×10^3	1.56×10^3	1.87×10^3	2.18×10^3	2.49×10^3	2.81×10^3	3.12×10^3
	Pull	4.20×10^2	5.61×10^2	8.41×10^2	1.12×10^3	1.40×10^3	1.68×10^3	1.96×10^3	2.24×10^3	2.52×10^3	2.80×10^3
ø80	Push	7.54×10^2	1.01×10^3	1.51×10^3	2.01×10^3	2.51×10^3	3.02×10^3	3.52×10^3	4.02×10^3	4.52×10^3	5.03×10^3
	Pull	6.80×10^2	9.07×10^2	1.36×10^3	1.81×10^3	2.27×10^3	2.72×10^3	3.17×10^3	3.63×10^3	4.08×10^3	4.54×10^3
ø100	Push	1.18×10^3	1.57×10^3	2.36×10^3	3.14×10^3	3.93×10^3	4.71×10^3	5.50×10^3	6.28×10^3	7.07×10^3	7.85×10^3
	Pull	1.07×10^3	1.43×10^3	2.14×10^3	2.86×10^3	3.57×10^3	4.29×10^3	5.00×10^3	5.72×10^3	6.43×10^3	7.15×10^3

How to order

No switch (built-in magnet for switch)

SCA2-H - LB - 40 ( ) B - 100 ———— S I

With switch (built-in magnet for switch)

SCA2-H - LB - 40 ( ) B - 100 - T0H - R - S I

Ⓐ Mounting *1

Ⓑ Bore size

Ⓒ Port thread

Ⓓ Cushion

Ⓔ Stroke *2

Ⓕ Switch model No. *4

Ⓖ Switch quantity *5

Ⓗ Option *6 *7

Ⓘ Accessory *8

Code	Description
Ⓐ Mounting	
00	Basic
LB	Axial foot
FA	Rod side flange
FB	Head side flange
FC	Head side special flange
CA	Eye bracket
CB	Clevis bracket (pin and snap ring included)
TC	Intermediate trunnion
TA	Rod side trunnion
TB	Head side trunnion
TF	Intermediate supporting hole trunnion (ø40 is not available)
TD	Rod side hole trunnion (ø40 is not available)
TE	Head side hole trunnion (ø40 is not available)

Ⓑ Bore size (mm)	
40	ø40
50	ø50
63	ø63
80	ø80
100	ø100

Ⓒ Port thread	
Blank	Rc thread
N	NPT thread (made-to-order product)
G	G thread (made-to-order product)

Ⓓ Cushion	
B	Both sides cushioned
R	Rod side cushioned
H	Head side cushioned
N	Without cushion

Ⓔ Stroke (mm)

Bore size	Stroke *3	Custom stroke
ø40	1 to 600	In 1 mm increments
ø50	1 to 600	
ø63	1 to 600	
ø80	1 to 700	
ø100	1 to 800	

Ⓕ Switch model No.

Refer to the switch model numbers on the next page.

*** Lead wire length**	
Blank	1 m (standard)
3	3 m (option)
5	5 m (option)

Ⓖ Switch quantity	
R	1 on rod side
H	1 on head side
D	2
T	3

Ⓗ Option

		Max. ambient temp.	Instantaneous max. temp.
J	Bellows	100°C	200°C
L	Bellows	250°C	400°C
M	Piston rod material (stainless steel)		
Blank	Cushion needle position R (standard)		
S	Cushion needle position S		
T	Cushion needle position T		
P6	Copper and PTFE free (made-to-order product)		

Ⓘ Accessory	
I	Rod eye
Y	Rod clevis (pin and snap ring included)
B1	Eye bracket
B2	Clevis bracket (pin and snap ring included)
B3	Eye bracket
B4	Trunnion No. 2 bracket (2 pcs./set)

⚠ Precautions for model No. selection

*1 : Mounting bracket will be shipped with the product. (Trunnion are assembled at shipment.)
*2 : If the stroke exceeds the max. stroke, refer to Ending Page 69.
*3 : Refer to pages 568 and 569 for the min. stroke with switch.
*4 : Switches are shipped with the product.
*5 : When selecting TA, TD, TB or TE mounting, the switch quantity is limited to "H" (1 on head side) for TA and TD, and "R" (1 on rod side) for TB and TE.
*6 : The instantaneous max. temperature is the temperature when sparks and cutting chips, etc., instantaneously contact the bellows.
*7 : When selecting TA, TD, TB or TE mounting format, the cushion needle position is blank and fixed at S, with no options available.
*8 : "I" and "Y" cannot be selected together.
*9 : Refer to Ending Page 85 for custom specifications of rod end form.
*10 : Refer to page 448 for combination of variations/options.

[Example of model No.]

SCA2-H-LB-40B-100-T0H-R-SI

Model: Medium bore size cylinder, double acting/low hydraulic

Ⓐ Mounting	: Axial foot
Ⓑ Bore size	: ø40 mm
Ⓒ Port thread	: Rc thread
Ⓓ Cushion	: Both sides cushioned
Ⓔ Stroke	: 100 mm
Ⓕ Switch model No.	: Reed T0H switch, lead wire length 1 m
Ⓖ Switch quantity	: 1 on rod side
Ⓗ Option	: Cushion needle position S
Ⓘ Accessory	: Rod eye

[F] Switch model No.

T-switch model No.						
Axial lead wire	Radial lead wire	Contact	Voltage AC	Voltage DC	Indicator	Lead wire
T0H*	T0V*	Reed	●	●	1-color LED	2-wire
T5H*	T5V*	Reed	●	●	No indicator lamp	2-wire
T8H*	T8V*	Reed	●	●	1-color LED	2-wire
T1H*	T1V*	Proximity	●		1-color LED	2-wire
T2H*	T2V*	Proximity		●	1-color LED	2-wire
T3H*	T3V*	Proximity		●	1-color LED	3-wire
T2WH*	T2WV*	Proximity		●	2-color LED	2-wire
T2YH*	T2YV*	Proximity		●	2-color LED	2-wire
T3WH*	T3WV*	Proximity		●	2-color LED	3-wire
T3YH*	T3YV*	Proximity		●	2-color LED	3-wire
T3PH*	T3PV*	Proximity		●	1-color LED	3-wire
T2YD*	-	Proximity		●	2-color LED	2-wire
T2YDT*	-	Proximity		●	AC magnetic field	2-wire
T2JH*	T2JV*	Proximity		●	1-color LED off-delay	2-wire

How to order switch

[T-switch]

● Switch body + mounting bracket set

SCA2 - T0H - 40

- T0H: Switch model No. (Item Ⓕ)
- 40: Bore size (Item Ⓑ on page 572)

● Switch body only

SW - T0H

- T0H: Switch model No. (Item Ⓕ)

* Contact CKD when using an environment-friendly T-switch.

● Switch mounting bracket set

SCA2 - TS - 40

- TS: Mounting bracket
- 40: Bore size (Item Ⓑ on page 572)

[T2YD switch]

● Switch body + mounting bracket set

SCA2 - T2YD - 40

- T2YD: Switch model No. (Item Ⓕ)
- 40: Bore size (Item Ⓑ on page 572)

● Switch body only

SW - T2YD

- T2YD: Switch model No. (Item Ⓕ)

● Mounting bracket set

SCA2 - T - 40

- 40: Bore size (Item Ⓑ on page 572)

How to order mounting bracket

Bore size (mm) / Mounting bracket	ø40	ø50	ø63	ø80	ø100
Foot (LB) *2	S1-LB-40	S1-LB-50	S1-LB-63	S1-LB-80	S1-LB-100
Flange (FA/FB)	S1-FA-40	S1-FA-50	S1-FA-63	S1-FA-80	S1-FA-100
Eye bracket (CA)	S1-CA-40	S1-CA-50	S1-CA-63	S1-CA-80	S1-CA-100
Clevis bracket (CB)	S1-CB-40	S1-CB-50	S1-CB-63	S1-CB-80	S1-CB-100

*1 : For material of the mounting bracket, refer to page 456.
*2 : The foot mounting bracket is provided as 2 pcs./set.
*3 : All mounting brackets are supplied with mounting bolts.

Internal structure and parts list

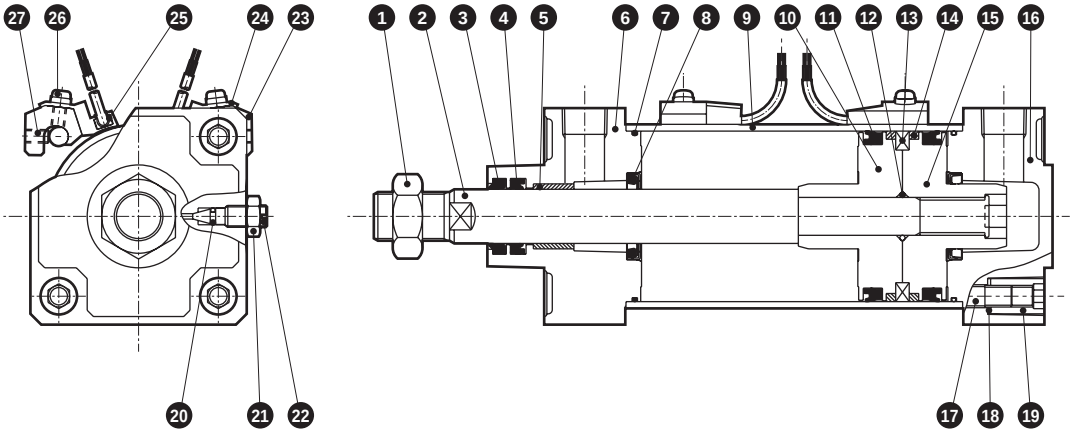

No.	Part name	Material	Remarks	No.	Part name	Material	Remarks
1	Rod nut	Steel	Zinc chromate	15	Piston H	Aluminum alloy die-casting	
2	Piston rod	Steel	Industrial chrome plating	16	Head cover	Aluminum alloy die-casting	Paint
3	Dust wiper	Nitrile rubber		17	Tie rod	Steel	Zinc chromate
4	Rod packing	Nitrile rubber		18	Conical spring washer	Steel	Black finish
5	Bush	Oil impregnated bearing alloy	*1	19	Round nut	Steel	Zinc chromate
6	Rod cover	Aluminum alloy die-casting	Paint	20	Needle gasket	Nitrile rubber	
7	Cylinder gasket	Nitrile rubber		21	Needle nut	Copper alloy	Nickel plating *2
8	Cushion packing	Nitrile rubber, steel		22	Cushion needle	Copper alloy	Nickel plating *2
9	Cylinder tube	Aluminum alloy	Hard alumite treatment	With switch			
10	Piston R	Aluminum alloy die-casting		23	Switch mounting base	Aluminum alloy	
11	Piston packing	Nitrile rubber		24	Switch holder	Aluminum alloy	
12	Piston gasket	Nitrile rubber		25	Cylinder switch		
13	Magnet	Plastic		26	Phillips pan head machine screw/captive washer	Steel	Zinc chromate
14	Wear ring	Polyacetal resin		27	Hexagon socket set screw	Alloy steel	Black finish

*1: Oil-impregnated cast iron bearing for copper and PTFE free.
*2: Copper + galvanizing for copper and PTFE free.

Repair parts list

Bore size (mm)	Kit No.	Repair parts No.
ø40	SCA2-H-40K	3 4 7 8 11 14 20
ø50	SCA2-H-50K	
ø63	SCA2-H-63K	
ø80	SCA2-H-80K	
ø100	SCA2-H-100K	

Note: Specify the kit No. when placing an order.

Dimensions

Same dimensions as the double acting/single rod. Refer to pages 457 to 469.

MEMO

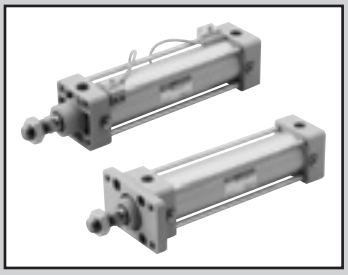

Medium bore size cylinder
Double acting/rubber scraper

SCA2-G Series

● Bore size: ø40/ø50/ø63/ø80/ø100

JIS symbol

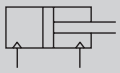

RoHS CAD

Specifications

Item		SCA2-G (Rubber scraper)				
Bore size	mm	ø40	ø50	ø63	ø80	ø100
Actuation		Double acting				
Working fluid		Compressed air				
Max. working pressure	MPa	1.0 (≈150 psi, 10 bar)				
Min. working pressure	MPa	0.05 (≈7.3 psi, 0.5 bar)				
Proof pressure	MPa	1.6 (≈230 psi, 16 bar)				
Ambient temperature	°C	-10 (14°F) to 60 (140°F) (no freezing)				
Port size		Rc1/4	Rc3/8		Rc1/2	
Stroke tolerance	mm	$^{+0.9}_{0}$ (to 360), $^{+1.4}_{0}$ (to 800)				
Working piston speed	mm/s	50 to 1000 (Operate within the allowable absorbed energy.)				
Cushion		Air cushion				
Effective air cushion length	mm	14.6	16.6	16.6	20.6	23.6
Lubrication		Not required (use turbine oil class 1 ISO VG32 if necessary for lubrication)				
Allowable absorbed energy	J Cushioned	4.29	8.37	15.8	27.9	49.8
	J Without cushion	0.067	0.079	0.079	0.201	0.301
		Without any cushion, this product cannot absorb large energy generated by an external load. We recommend using an external shock absorber.				

Stroke

Bore size (mm)	Standard stroke (mm)	Max. stroke (mm)	Available stroke (mm)	Min. stroke (mm)
ø40	25/50/75/100/ 150/200/250/ 300/350/400/ 450/500	600	1600	1
ø50			2000	
ø63			2500	
ø80		700		
ø100		800		

*1 : The custom stroke is available in 1 mm increments.
*2 : If max. stroke is exceeded, product specifications may not be satisfied depending on the conditions. Refer to Ending Page 69.

Min. stroke with switch

● T0/T5 min. stroke with switches

	Different surface mounting				Same surface mounting				Center trunnion mounting				Rod side trunnion mounting No position detection at rod side stroke end.	Head side trunnion mounting No position detection at head side stroke end.
Switch Qty	1	2	3	4	1	2	3	4	1	2	3	4	1	1
ø40	20(10)	20(20)	40(40)	60(60)	20(10)	60(45)	105(75)	150(105)	110(110)	110(110)	175(145)	175(145)	50(50)	50(50)
ø50	15(10)	20(20)	40(40)	60(60)	15(10)	20(20)	65(50)	65(60)	135(135)	135(135)	135(135)	135(135)	60(60)	60(60)
ø63	15(10)	20(20)	40(40)	60(60)	15(10)	20(20)	70(55)	70(60)	110(95)	110(95)	110(100)	110(100)	50(45)	50(45)
ø80	15(15)	25(25)	45(45)	65(65)	15(15)	25(25)	70(55)	70(65)	115(85)	115(85)	115(105)	115(105)	55(40)	55(40)
ø100	15(15)	25(25)	45(45)	70(70)	15(15)	25(25)	70(55)	70(70)	125(95)	125(95)	125(115)	125(115)	60(45)	60(45)

*1 : The values in ( ) are of T*V (L-shaped lead wire).
*2 : When the stroke is 15 mm or less, the two switches could turn ON at the same time. In this case, adjust switch mounting positions to be as far apart as possible.

● T8 min. stroke with switch

	Different surface mounting				Same surface mounting				Center trunnion mounting				Rod side trunnion mounting No position detection at rod side stroke end.	Head side trunnion mounting No position detection at head side stroke end.
Switch Qty	1	2	3	4	1	2	3	4	1	2	3	4	1	1
ø40	15(10)	20(20)	40(40)	60(60)	15(10)	50(35)	95(65)	140(95)	95(85)	95(85)	155(125)	155(125)	45(40)	45(40)
ø50	10(10)	20(20)	40(40)	60(60)	10(10)	20(20)	70(55)	70(60)	115(115)	115(115)	135(135)	135(135)	50(50)	50(50)
ø63	10(10)	20(20)	40(40)	60(60)	10(10)	20(20)	70(55)	70(60)	95(75)	95(75)	110(110)	110(110)	45(35)	45(35)
ø80	15(15)	25(25)	45(45)	65(65)	15(15)	25(25)	70(55)	70(65)	100(70)	100(70)	115(115)	115(115)	50(35)	50(35)
ø100	15(15)	25(25)	45(45)	65(65)	15(15)	25(25)	70(55)	70(65)	110(80)	110(80)	125(125)	125(125)	55(40)	55(40)

*1: The values in ( ) are of T*V (L-shaped lead wire).
*2: When the stroke is 15 mm or less, the two switches could turn ON at the same time. In this case, adjust switch mounting positions to be as far apart as possible.

Min. stroke with switch

● T2/T3 min. stroke with switches

	Different surface mounting				Same surface mounting				Center trunnion mounting				Rod side trunnion mounting No position detection at rod side stroke end.	Head side trunnion mounting No position detection at head side stroke end.
Switch Qty	1	2	3	4	1	2	3	4	1	2	3	4	1	1
ø40	20(10)	20(15)	25(25)	40(40)	20(10)	60(45)	105(75)	150(105)	105(75)	105(75)	165(135)	165(135)	50(35)	50(35)
ø50	15(10)	15(15)	25(25)	40(40)	15(10)	15(15)	60(45)	60(45)	105(75)	105(75)	105(75)	105(75)	45(30)	45(30)
ø63	15(10)	15(15)	25(25)	40(40)	15(10)	15(15)	60(45)	60(45)	110(80)	110(80)	110(85)	110(85)	50(35)	50(35)
ø80	15(10)	15(15)	30(30)	45(45)	15(10)	15(15)	60(45)	60(45)	115(85)	115(85)	115(90)	115(90)	55(40)	55(40)
ø100	10(10)	15(15)	30(30)	45(45)	10(10)	15(15)	60(45)	60(45)	125(95)	125(95)	125(100)	125(100)	60(45)	60(45)

*1: The values in ( ) are of T*V (L-shaped lead wire).
*2: When the stroke is 15 mm or less, the two switches could turn ON at the same time. In this case, adjust switch mounting positions to be as far apart as possible.

● T1/T2Y/T3Y/T2YD min. stroke with switches

	Different surface mounting				Same surface mounting				Center trunnion mounting				Rod side trunnion mounting No position detection at rod side stroke end.	Head side trunnion mounting No position detection at head side stroke end.
Switch Qty	1	2	3	4	1	2	3	4	1	2	3	4	1	1
ø40	20(10)	20(15)	25(25)	40(40)	20(10)	60(45)	105(75)	150(105)	105(75)	105(75)	165(135)	165(135)	50(35)	50(35)
ø50	15(10)	15(15)	25(25)	40(40)	15(10)	15(15)	60(45)	60(45)	100(70)	100(70)	100(75)	100(75)	45(30)	45(30)
ø63	15(10)	15(15)	25(25)	40(40)	15(10)	15(15)	60(45)	60(45)	105(75)	105(75)	105(85)	105(85)	50(35)	50(35)
ø80	15(10)	15(15)	30(30)	45(45)	15(10)	15(15)	60(45)	60(45)	110(80)	110(80)	110(90)	110(90)	55(40)	55(40)
ø100	10(10)	15(15)	30(30)	45(45)	10(10)	15(15)	60(45)	60(45)	120(90)	120(90)	120(100)	120(100)	60(45)	60(45)

*1: The values in ( ) are of T*V (L-shaped lead wire). T2YD does not have an L-shaped lead wire (V).
*2: When the stroke is 15 mm or less, the two switches could turn ON at the same time. In this case, adjust switch mounting positions to be as far apart as possible.

● T2W/T3W min. stroke with switches

	Different surface mounting				Same surface mounting				Center trunnion mounting				Rod side trunnion mounting No position detection at rod side stroke end.	Head side trunnion mounting No position detection at head side stroke end.
Switch Qty	1	2	3	4	1	2	3	4	1	2	3	4	1	1
ø40	20(5)	20(10)	20(15)	25(25)	20(5)	65(50)	110(80)	155(110)	110(80)	110(80)	170(140)	170(140)	50(35)	50(35)
ø50	20(5)	20(10)	20(15)	20(20)	20(5)	20(10)	65(40)	65(40)	110(80)	110(80)	110(80)	110(80)	50(35)	50(35)
ø63	20(5)	20(10)	20(15)	25(25)	20(5)	20(10)	65(40)	65(40)	115(85)	115(85)	115(85)	115(85)	55(40)	55(40)
ø80	15(5)	15(10)	15(15)	25(25)	15(5)	15(10)	60(40)	60(40)	120(90)	120(90)	120(90)	120(90)	55(40)	55(40)
ø100	10(5)	10(10)	20(20)	25(25)	10(5)	10(10)	60(40)	60(40)	130(100)	130(100)	130(100)	130(100)	60(45)	60(45)

*1: The values in ( ) are of T*V (L-shaped lead wire).
*2: When the stroke is 15 mm or less, the two switches could turn ON at the same time. In this case, adjust switch mounting positions to be as far apart as possible.

SCP*3
CMK2
CMA2
SCM
SCG
SCA2
SCS2
CKV2
CAV2/COVP/N2
SSD2
SSG
SSD
CAT
MDC2
MVC
SMG
MSD/MSDG
FC*
STK
SRL3
SRG3
SRM3
SRT3
MRL2
MRG2
SM-25
ShkAbs
FJ
FK
Spd Contr
Ending

Switch specifications (T-switch)

● 1-color/2-color LED/for AC magnetic field proof

Item	2-wire proximity	2-wire proximity			3-wire proximity				2-wire reed							2-wire proximity
	T1H/T1V	T2H/T2V/T2JH/T2JV	T2YH/T2YV	T2WH/T2WV	T3H/T3V	T3PH/T3PV	T3YH/T3YV	T3WH/T3WV	T0H/T0V		T5H/T5V		T8H/T8V			T2YD (*4) T2YDT
Applications	For programming controller, relay, compact solenoid valve	Dedicated for programmable controller			For programmable controller, relay				For programmable controller, relay		For programmable controller, relay (no lamp), serial		For programmable controller, relay			Dedicated for programmable controller
Output method	-				NPN output	PNP output	NPN output	NPN output	-							
Pwr. supp. V.	-				10 to 28 VDC				-							
Load voltage	85 to 265 VAC	10 to 30 VDC		24 VDC ±10%	30 VDC or less				12/24 VDC	110 VAC	5/12/24 VDC	110 VAC	12/24 VDC	110 VAC	220 VAC	24 VDC ±10%
Load current	5 to 100 mA	5 to 20 mA (*3)			100 mA or less		50 mA or less		5 to 50 mA	7 to 20 mA	50 mA or less	20 mA or less	5 to 50 mA	7 to 20 mA	7 to 10 mA	5 to 20 mA
Indicator	LED (Lit when ON)	LED (Lit when ON)	Red/green LED (Lit when ON)	Red/green LED (Lit when ON)	LED (Lit when ON)	Yellow LED (Lit when ON)	Red/green LED (Lit when ON)	Red/green LED (Lit when ON)	LED (Lit when ON)		No indicator lamp		LED (Lit when ON)			Red/green LED (Lit when ON)
Leakage current	≤ 1 mA at 100 VAC, ≤ 2 mA at 200 VAC	1 mA or less			10 μA or less				0 mA							1 mA or less
Weight g	1 m:33 3 m:87 5 m:142	1 m:18 3 m:49 5 m:80	1 m:33 3 m:87 5 m:142	1 m:18 3 m:49 5 m:80	1 m:18 3 m:49 5 m:80		1 m:33 3 m:87 5 m:142	1 m:18 3 m:49 5 m:80	1 m:18 3 m:49 5 m:80				1 m:33 3 m:87 5 m:142			1 m:61 3 m:166 5 m:272

*1 : Refer to Ending Page 1 for detailed switch specifications and dimensions.
*2 : Switches other than the above models, such as switches with connectors, are also available. Refer to Ending Page 1.
*3 : Max. load current: 20 mA at 25°C. The current is lower than 20 mA if the operating ambient temperature around the switch is higher than 25˚C. (5 to 10 mA at 60°C)
*4 : Switch for AC magnetic field (T2YD/T2YDT) cannot be used in DC magnetic field.

Cylinder weight

(Unit: kg)

Bore size (mm)	Product weight when stroke (S) = 0 mm						Switch weight	Mounting bracket weight	Additional weight per S = 100 mm
	Basic (00)	Foot (LB)	Flange (FA, FB)	Eye bracket (CA)	Clevis bracket (CB)	Trunnion (TA, TB, TC)		T type	
ø40	0.83	1.00	1.24	1.15	1.19	1.21	Refer to the weight in the switch specifications.	0.024	0.39
ø50	1.20	1.45	1.69	1.58	1.61	1.74		0.022	0.46
ø63	1.60	1.97	2.69	2.17	2.22	2.45		0.020	0.50
ø80	2.60	3.34	4.46	3.87	4.08	3.94		0.026	0.90
ø100	4.20	5.11	6.94	5.84	6.02	6.77		0.024	1.12

(Example) Product weight of SCA2-G-LB-50B-200-TOH-D

- Product weight for 0 mm stroke ..... 1.45 kg
- Additional weight for 200 mm stroke ..... $0.46 \times \frac{200}{100} = 0.92$ kg
- Weight of 2 TOH switches ..... 0.018 x 2 = 0.036 kg
- Weight of 2 mounting brackets ..... 0.022 x 2 = 0.044 kg
- Product weight ..... 1.45 + 0.92 + 0.036 + 0.044 = 2.450 kg

Theoretical thrust table

(Unit: N)

Bore size (mm)	Operating direction	Working pressure MPa											
		0.05	0.1	0.15	0.2	0.3	0.4	0.5	0.6	0.7	0.8	0.9	1.0
ø40	Push	62.8	1.26×10^2	1.88×10^2	2.51×10^2	3.77×10^2	5.03×10^2	6.28×10^2	7.54×10^2	8.80×10^2	1.01×10^3	1.13×10^3	1.26×10^3
	Pull	52.8	1.06×10^2	1.58×10^2	2.11×10^2	3.17×10^2	4.22×10^2	5.28×10^2	6.33×10^2	7.39×10^2	8.44×10^2	9.50×10^2	1.06×10^3
ø50	Push	98.2	1.96×10^2	2.95×10^2	3.93×10^2	5.89×10^2	7.85×10^2	9.82×10^2	1.18×10^3	1.37×10^3	1.57×10^3	1.77×10^3	1.96×10^3
	Pull	82.5	1.65×10^2	2.47×10^2	3.30×10^2	4.95×10^2	6.60×10^2	8.25×10^2	9.90×10^2	1.15×10^3	1.32×10^3	1.48×10^3	1.65×10^3
ø63	Push	1.56×10^2	3.12×10^2	4.68×10^2	6.23×10^2	9.35×10^2	1.25×10^3	1.56×10^3	1.87×10^3	2.18×10^3	2.49×10^3	2.81×10^3	3.12×10^3
	Pull	1.40×10^2	2.80×10^2	4.20×10^2	5.61×10^2	8.41×10^2	1.12×10^3	1.40×10^3	1.68×10^3	1.96×10^3	2.24×10^3	2.52×10^3	2.80×10^3
ø80	Push	2.51×10^2	5.03×10^2	7.54×10^2	1.01×10^3	1.51×10^3	2.01×10^3	2.51×10^3	3.02×10^3	3.52×10^3	4.02×10^3	4.52×10^3	5.03×10^3
	Pull	2.27×10^2	4.54×10^2	6.80×10^2	9.07×10^2	1.36×10^3	1.81×10^3	2.27×10^3	2.72×10^3	3.17×10^3	3.63×10^3	4.08×10^3	4.54×10^3
ø100	Push	3.93×10^2	7.85×10^2	1.18×10^3	1.57×10^3	2.36×10^3	3.14×10^3	3.93×10^3	4.71×10^3	5.50×10^3	6.28×10^3	7.07×10^3	7.85×10^3
	Pull	3.57×10^2	7.15×10^2	1.07×10^3	1.43×10^3	2.14×10^3	2.86×10^3	3.57×10^3	4.29×10^3	5.00×10^3	5.72×10^3	6.43×10^3	7.15×10^3

SCP*3
CMK2
CMA2
SCM
SCG
SCA2
SCS2
CKV2
CAV2/COVP/N2
SSD2
SSG
SSD
CAT
MDC2
MVC
SMG
MSD/MSDG
FC*
STK
SRL3
SRG3
SRM3
SRT3
MRL2
MRG2
SM-25
ShkAbs
FJ
FK
Spd Contr
Ending

How to order

No switch (built-in magnet for switch)

SCA2-G - LB - 40 ( ) B - 100 ———— S I

With switch (built-in magnet for switch)

SCA2-G - LB - 40 ( ) B - 100 - T0H - R - S I

- A Mounting *1
- B Bore size
- C Port thread
- D Cushion
- E Stroke *2
- F Switch model No. *4
- G Switch quantity *5
- H Option *6
- I Accessory *7

Code	Description
A Mounting	
00	Basic
LB	Axial foot
FA	Rod side flange
FB	Head side flange
FC	Head side special flange
CA	Eye bracket
CB	Clevis bracket (pin and snap ring included)
TC	Intermediate trunnion
TA	Rod side trunnion
TB	Head side trunnion
TF	Intermediate supporting hole trunnion (ø40 is not available)
TD	Rod side hole trunnion (ø40 is not available)
TE	Head side hole trunnion (ø40 is not available)
B Bore size (mm)	
40	ø40
50	ø50
63	ø63
80	ø80
100	ø100
C Port thread	
Blank	Rc thread
N	NPT thread (made-to-order product)
G	G thread (made-to-order product)
D Cushion	
B	Both sides cushioned
R	Rod side cushioned
H	Head side cushioned
N	Without cushion

E Stroke (mm)

Bore size	Stroke *3	Available stroke	Custom stroke
ø40	1 to 600	1600	In 1 mm increments
ø50	1 to 600	2000	
ø63	1 to 600	2500	
ø80	1 to 700		
ø100	1 to 800		

F Switch model No.	
Refer to the switch model numbers on the next page.	
*** Lead wire length**	
Blank	1 m (standard)
3	3 m (option)
5	5 m (option)
G Switch quantity	
R	1 on rod side
H	1 on head side
D	2
T	3
H Option	
M	Piston rod material (stainless steel)
Blank	Cushion needle position R (standard)
S	Cushion needle position S
T	Cushion needle position T
P6	Copper and PTFE free (made-to-order product)
I Accessory	
I	Rod eye
Y	Rod clevis (pin and snap ring included)
B1	Eye bracket
B2	Clevis bracket (pin and snap ring included)
B3	Eye bracket
B4	Trunnion No. 2 bracket (2 pcs./set)

⚠ Precautions for model No. selection

*1 : Mounting bracket will be shipped with the product. (Trunnion are assembled at shipment.)
*2 : If the stroke exceeds the max. stroke, refer to Ending Page 69.
*3 : Refer to pages 576 and 577 for the min. stroke with switch.
*4 : Switches are shipped with the product.
*5 : When selecting TA, TD, TB or TE mounting, the switch quantity is limited to "H" (1 on head side) for TA and TD, and "R" (1 on rod side) for TB and TE.
*6 : When selecting TA, TD, TB or TE mounting format, the cushion needle position is blank and fixed at S, with no options available.
*7 : "I" and "Y" cannot be selected together.
*8 : Refer to Ending Page 85 for custom specifications of rod end form.
*9 : Refer to page 448 for combination of variations/options.

[Example of model No.]

SCA2-G-LB-40B-100-T0H-R-SI

Model: Medium bore size cylinder, double acting/rubber scraper

A Mounting	: Axial foot
B Bore size	: ø40 mm
C Port thread	: Rc thread
D Cushion	: Both sides cushioned
E Stroke	: 100 mm
F Switch model No.	: Reed T0H switch, lead wire length 1 m
G Switch quantity	: 1 on rod side
H Option	: Cushion needle position S
I Accessory	: Rod eye

[F] Switch model No.

T-switch model No.						
Axial lead wire	Radial lead wire	Contact	Voltage AC	Voltage DC	Indicator	Lead wire
T0H*	T0V*	Reed	●	●	1-color LED	2-wire
T5H*	T5V*	Reed	●	●	No indicator lamp	2-wire
T8H*	T8V*	Reed	●	●	1-color LED	2-wire
T1H*	T1V*	Proximity	●		1-color LED	2-wire
T2H*	T2V*	Proximity		●	1-color LED	2-wire
T3H*	T3V*	Proximity		●	1-color LED	3-wire
T2WH*	T2WV*	Proximity		●	2-color LED	2-wire
T2YH*	T2YV*	Proximity		●	2-color LED	2-wire
T3WH*	T3WV*	Proximity		●	2-color LED	3-wire
T3YH*	T3YV*	Proximity		●	2-color LED	3-wire
T3PH*	T3PV*	Proximity		●	1-color LED	3-wire
T2YD*	-	Proximity		●	2-color LED AC magnetic field	2-wire
T2YDT*	-	Proximity		●	2-color LED AC magnetic field	2-wire
T2JH*	T2JV*	Proximity		●	1-color LED off-delay	2-wire

How to order switch

[T-switch]

● Switch body + mounting bracket set

SCA2 - T0H - 40

- T0H: Switch model No. (Item Ⓕ)
- 40: Bore size (Item Ⓑ on page 580)

● Switch body only

SW - T0H

- T0H: Switch model No. (Item Ⓕ)

* Contact CKD when using an environment-friendly T-switch.

● Switch mounting bracket set

SCA2 - TS - 40

- TS: Mounting bracket
- 40: Bore size (Item Ⓑ on page 580)

[T2YD switch]

● Switch body + mounting bracket set

SCA2 - T2YD - 40

- T2YD: Switch model No. (Item Ⓕ)
- 40: Bore size (Item Ⓑ on page 580)

● Switch body only

SW - T2YD

- T2YD: Switch model No. (Item Ⓕ)

● Mounting bracket set

SCA2 - T - 40

- 40: Bore size (Item Ⓑ on page 580)

How to order mounting bracket

Bore size (mm) / Mounting bracket	ø40	ø50	ø63	ø80	ø100
Foot (LB) *2	S1-LB-40	S1-LB-50	S1-LB-63	S1-LB-80	S1-LB-100
Flange (FA/FB)	S1-FA-40	S1-FA-50	S1-FA-63	S1-FA-80	S1-FA-100
Eye bracket (CA)	S1-CA-40	S1-CA-50	S1-CA-63	S1-CA-80	S1-CA-100
Clevis bracket (CB)	S1-CB-40	S1-CB-50	S1-CB-63	S1-CB-80	S1-CB-100

*1 : For material of the mounting bracket, refer to page 456.
*2 : The foot mounting bracket is provided as 2 pcs./set.
*3 : All mounting brackets are supplied with mounting bolts.

Internal structure and parts list

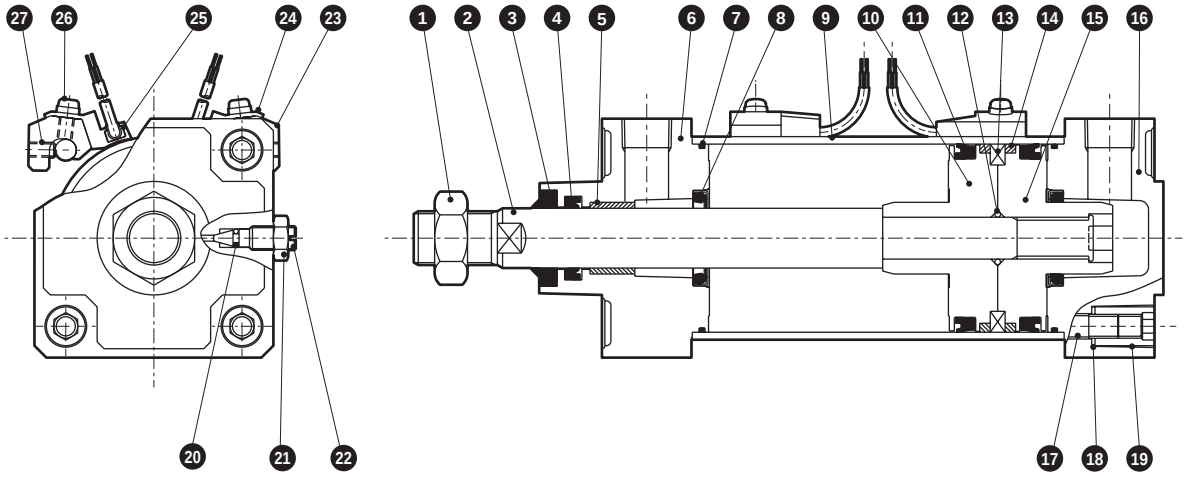

No.	Part name	Material	Remarks	No.	Part name	Material	Remarks
1	Rod nut	Steel	Zinc chromate	15	Piston H	Aluminum alloy die-casting	
2	Piston rod	Steel	Industrial chrome plating	16	Head cover	Aluminum alloy die-casting	Paint
3	Dust wiper	Nitrile rubber		17	Tie rod	Steel	Zinc chromate
4	Rod packing	Nitrile rubber		18	Conical spring washer	Steel	Black finish
5	Bush	Oil impregnated bearing alloy		19	Round nut	Steel	Zinc chromate
6	Rod cover	Aluminum alloy die-casting	Paint	20	Needle gasket	Nitrile rubber	
7	Cylinder gasket	Nitrile rubber		21	Needle nut	Copper alloy	Nickel plating
8	Cushion packing	Nitrile rubber/steel		22	Cushion needle	Copper alloy	Nickel plating
9	Cylinder tube	Aluminum alloy	Hard alumite	23	Switch mounting base	Aluminum alloy	
10	Piston R	Aluminum alloy die-casting		24	Switch holder	Aluminum alloy	
11	Piston packing	Nitrile rubber		25	Cylinder switch		
12	Piston gasket	Nitrile rubber		26	Phillips pan head machine screw/captive washer	Steel	Zinc chromate
13	Magnet	Plastic		27	Hexagon socket set screw	Alloy steel	Black finish
14	Wear ring	Polyacetal resin					

Repair parts list

Bore size (mm)	Kit No.	Repair parts No.
ø40	SCA2-G-40K	3 4 7 8 11 14 20
ø50	SCA2-G-50K	
ø63	SCA2-G-63K	
ø80	SCA2-G-80K	
ø100	SCA2-G-100K	

*1: Specify the kit No. when placing an order.

Dimensions

● Basic (00)

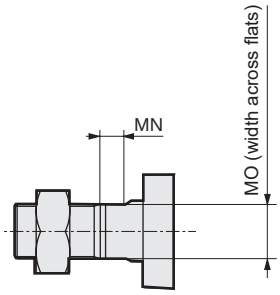

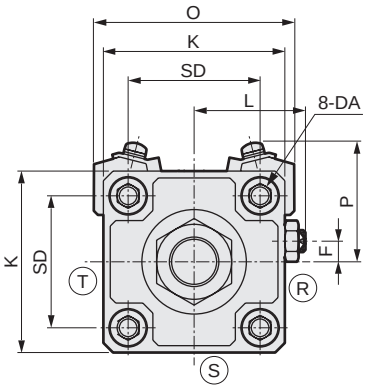

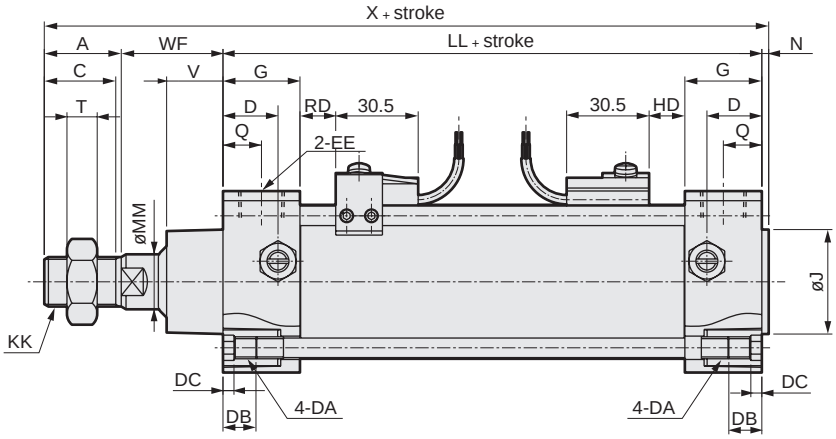

Code	Basic (00) with switch														
Bore size (mm)	A	C	D	DA	DB	DC	EE	F	G	J	K	KK	L	LL	MM
ø40	22	20	18	M8	12	4	Rc1/4	7.5	26	31	57	M14x1.5	38 to 39.5	93	16
ø50	28	26	20	M8	12	4	Rc3/8	0	28	38	66	M18x1.5	41 to 43.5	101	20
ø63	28	26	22	M8	12	4	Rc3/8	0	30	38	80	M18x1.5	47.5 to 50.0	105	20
ø80	36	34	26	M12	16	5	Rc1/2	0	34	43	98	M22x1.5	56 to 59	116	25
ø100	45	43	28	M12	16	5	Rc1/2	0	36	51	118	M26x1.5	66 to 69	128	30

Code										With switch			
Bore size (mm)	MN	MO	N	Q	SD	T	V	WF	X	HD	P	O	RD
ø40	8	14	2	13	40.5	8	17	33.5	150.5	10	42	66	10
ø50	8	17	2.5	14	48	11	20	37	168.5	12	44	73	12
ø63	8	17	3	15	59	11	20.5	35	171	12	47	84	12
ø80	11	22	3.5	17	74	13	23	48	203.5	13.5	58	104	13.5
ø100	13	27	4	18	90	16	30.5	53	230	17.5	64	120	17.5

*Mounting dimensions of each mounting format are the same as those of SCA2 (standard). Refer to pages 458 to 469.
*For the dimensions of the accessories, refer to pages 470 and 471.

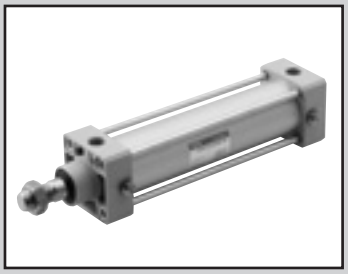

Medium bore size cylinder
Double acting/coolant proof

SCA2-G2/G3 Series

● Bore size: ø40/ø50/ø63/ø80/ø100

JIS symbol

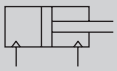

RoHS CAD

Specifications

Item		SCA2-G2/G3				
Bore size mm		ø40	ø50	ø63	ø80	ø100
Actuation		Double acting/coolant proof				
Working fluid		Compressed air				
Max. working pressure MPa		1.0 (≈150 psi, 10 bar)				
Min. working pressure MPa		0.05 (≈7.3 psi, 0.5 bar)				
Proof pressure MPa		1.6 (≈230 psi, 16 bar)				
Ambient temperature °C		-10 (14°F) to 60 (140°F) (no freezing)				
Port size		Rc1/4	Rc3/8		Rc1/2	
Stroke tolerance mm		$^{+0.9}_{0}$ (to 360), $^{+1.4}_{0}$ (to 800)				
Working piston speed mm/s		50 to 1000 (Use within the allowable absorbed energy.)				
Cushion		Air cushion				
Effective air cushion length mm		14.6	16.6	16.6	20.6	23.6
Lubrication		Not required (use turbine oil class 1 ISO VG32 if necessary for lubrication)				
Allowable absorbed energy J	Cushioned	4.29	8.37	15.8	27.9	49.8
	Without cushion	0.067	0.079	0.079	0.201	0.301
		Without any cushion, this product cannot absorb large energy generated by an external load. We recommend using an external shock absorber.				

Stroke

Bore size (mm)	Standard stroke (mm)	Max. stroke (mm)	Available stroke (mm)	Min. stroke (mm)
ø 40	25, 50, 75, 100, 150, 200, 250, 300, 350, 400, 450, 500	600	1600	1
ø 50			2000	
ø 63			2500	
ø 80		700		
ø100		800		

*1 : The custom stroke is available in 1 mm increments.
*2 : For types with switch, minimum stroke varies depending on the mounting method. Refer to the table below for details.
When the stroke is 15 mm or less, the two switches could turn ON at the same time.
In this case, increase the space between the switches to adjust their positions.
*3 : If max. stroke is exceeded, product specifications may not be satisfied depending on the conditions. Refer to Ending Page 69.

● Min. stroke with T2YL/T3YL switches

	Different surface mounting				Same surface mounting				Center trunnion mounting				Rod side trunnion mounting No position detection at rod side stroke end.	Head side trunnion mounting No position detection at head side stroke end.
Switch quantity	1	2	3	4	1	2	3	4	1	2	3	4	1	1
ø40	20(10)	20(15)	25(25)	40(40)	20(10)	60(45)	105(75)	150(105)	105(75)	105(75)	165(135)	165(135)	50(35)	50(35)
ø50	15(10)	15(15)	25(25)	40(40)	15(10)	15(15)	60(45)	60(45)	100(70)	100(70)	100(75)	100(75)	45(30)	45(30)
ø63	15(10)	15(15)	25(25)	40(40)	15(10)	15(15)	60(45)	60(45)	105(75)	105(75)	105(85)	105(85)	50(35)	50(35)
ø80	15(10)	15(15)	30(30)	45(45)	15(10)	15(15)	60(45)	60(45)	110(80)	110(80)	110(90)	110(90)	55(40)	55(40)
ø100	10(10)	15(15)	30(30)	45(45)	10(10)	15(15)	60(45)	60(45)	120(90)	120(90)	120(100)	120(100)	60(45)	60(45)

*1: The values in ( ) are of T*V (L-shaped lead wire).
*2: When the stroke is 15 mm or less, the two switches could turn ON at the same time. In this case, adjust switch mounting positions to be as far apart as possible.

Switch specifications

Item	2-wire proximity	3-wire proximity
	T2YLH/T2YLV	T3YLH/T3YLV
Applications	Dedicated for programmable controller	Programmable controller, relay
Power supply voltage	-	10 to 28 VDC
Load voltage/current	10 to 30 VDC, 5 to 20 mA *3	30 VDC or less, 50 mA or less
Lamp	Red/green LED (Lit when ON)	
Max. shock resistance	980 m / S^2	
Leakage current	1 mA or less	10 μA or less
Weight g	1 m:33 3 m:87 5 m:142	

*1 : Refer to Ending Page 1 for detailed switch specifications and dimensions.
*2 : Switches with connectors are also available. Refer to Ending Page 1.
*3 : The max. load current is 20 mA at 25°C. The current is lower than 20 mA if the operating ambient temperature around the switch is higher than 25°C. (5 to 10 mA at 60°C)

Cylinder weight

(Unit: kg)

Bore size (mm)	Product weight when stroke (S) = 0 mm							Switch weight	Mounting bracket weight	Additional weight per S = 100 mm
	Basic (OO)	Foot (LB)	Flange (FA, FB)	Special flange (FC)	Eye bracket (CA)	Clevis bracket (CB)	Trunnion (TA, TB, TC)		T type	
ø40	0.84	1.01	1.25	0.93	1.16	1.20	1.22	Refer to the weight in the switch specifications.	0.024	0.39
ø50	1.23	1.48	1.72	1.34	1.61	1.64	1.77		0.022	0.46
ø63	1.63	2.00	2.72	1.81	2.20	2.25	2.48		0.020	0.50
ø80	2.63	3.37	4.49	2.99	3.90	4.11	3.97		0.026	0.90
ø100	4.24	5.15	6.98	4.79	5.88	6.06	6.81		0.024	1.12

(Example) Product weight of SCA2-G2-LB-50-200-T2YLH-D

- Product weight for 0 mm stroke ..... 1.48 kg
- Additional weight for 200 mm stroke ..... $0.46 \times \frac{200}{100} = 0.92$ kg
- Weight of 2 T2YLH switches ..... 0.033x2 = 0.066 kg
- Weight of 2 mounting brackets ..... 0.022x2 = 0.044 kg
- Product weight ..... 1.48 + 0.92 + 0.066 + 0.044 = 2.510 kg

Theoretical thrust table

(Unit: N)

Bore size (mm)	Operating direction	Working pressure MPa											
		0.05	0.1	0.15	0.2	0.3	0.4	0.5	0.6	0.7	0.8	0.9	1.0
ø40	Push	62.8	1.26×10^2	1.88×10^2	2.51×10^2	3.77×10^2	5.03×10^2	6.28×10^2	7.54×10^2	8.80×10^2	1.01×10^3	1.13×10^3	1.26×10^3
	Pull	52.8	1.06×10^2	1.58×10^2	2.11×10^2	3.17×10^2	4.22×10^2	5.28×10^2	6.33×10^2	7.39×10^2	8.44×10^2	9.50×10^2	1.06×10^3
ø50	Push	98.2	1.96×10^2	2.95×10^2	3.93×10^2	5.89×10^2	7.85×10^2	9.82×10^2	1.18×10^3	1.37×10^3	1.57×10^3	1.77×10^3	1.96×10^3
	Pull	82.5	1.65×10^2	2.47×10^2	3.30×10^2	4.95×10^2	6.60×10^2	8.25×10^2	9.90×10^2	1.15×10^3	1.32×10^3	1.48×10^3	1.65×10^3
ø63	Push	1.56×10^2	3.12×10^2	4.68×10^2	6.23×10^2	9.35×10^2	1.25×10^3	1.56×10^3	1.87×10^3	2.18×10^3	2.49×10^3	2.81×10^3	3.12×10^3
	Pull	1.40×10^2	2.80×10^2	4.20×10^2	5.61×10^2	8.41×10^2	1.12×10^3	1.40×10^3	1.68×10^3	1.96×10^3	2.24×10^3	2.52×10^3	2.80×10^3
ø80	Push	2.51×10^2	5.03×10^2	7.54×10^2	1.01×10^3	1.51×10^3	2.01×10^3	2.51×10^3	3.02×10^3	3.52×10^3	4.02×10^3	4.52×10^3	5.03×10^3
	Pull	2.27×10^2	4.54×10^2	6.80×10^2	9.07×10^2	1.36×10^3	1.81×10^3	2.27×10^3	2.72×10^3	3.17×10^3	3.63×10^3	4.08×10^3	4.54×10^3
ø100	Push	3.93×10^2	7.85×10^2	1.18×10^3	1.57×10^3	2.36×10^3	3.14×10^3	3.93×10^3	4.71×10^3	5.50×10^3	6.28×10^3	7.07×10^3	7.85×10^3
	Pull	3.57×10^2	7.15×10^2	1.07×10^3	1.43×10^3	2.14×10^3	2.86×10^3	3.57×10^3	4.29×10^3	5.00×10^3	5.72×10^3	6.43×10^3	7.15×10^3

How to order

No switch (built-in magnet for switch)

SCA2 - G2 - LB - 50 ( ) B - 75 ———— S Y

With switch (built-in magnet for switch)

SCA2 - G2 - LB - 50 ( ) B - 75 - T2YLH - R - S Y

- A Degree of protection level
- B Mounting *1
- C Bore size
- D Port thread
- E Cushion
- F Stroke *2
- G Switch model No. *4
- H Switch quantity *5
- I Option *6
- J Accessory *7

* indicates the lead wire length.

Code	Description
A Degree of protection level	
G2	Coolant proof scraper + packing NBR
G3	Coolant proof scraper + packing FKM
B Mounting	
00	Basic
LB	Axial foot (Both sides)
FA	Rod side flange
FB	Head side flange
FC	Head side special flange
CA	Eye bracket
CB	Clevis bracket (pin and snap ring included)
TC	Intermediate trunnion
TA	Rod side trunnion
TB	Head side trunnion
TF	Intermediate supporting hole trunnion (ø40 is not available)
TD	Rod side hole trunnion (ø40 is not available)
TE	Head side hole trunnion (ø40 is not available)
C Bore size (mm)	
40	ø40
50	ø50
63	ø63
80	ø80
100	ø100
D Port thread	
Blank	Rc thread
N	NPT thread (made-to-order product)
G	G thread (made-to-order product)
E Cushion	
B	Both sides cushioned
R	Rod side cushioned
H	Head side cushioned
N	Without cushion

F Stroke (mm)

Bore size	Stroke *3	Available stroke	Custom stroke
ø40	1 to 600	1600	In 1 mm increments
ø50	1 to 600	2000	
ø63	1 to 600	2500	
ø80	1 to 700	2500	
ø100	1 to 800	2500	

G Switch model No.

Axial lead wire	Radial lead wire	Contact	Voltage AC	Voltage DC	Indicator	Lead wire
T2YLH*	T2YLV*	Proximity		●	2-color LED	2-wire
T3YLH*	T3YLV*	Proximity		●	2-color LED	3-wire

* Lead wire length	
Blank	1 m (standard)
3	3 m (option)
5	5 m (option)

H Switch quantity	
R	1 on rod side
H	1 on head side
D	2
T	3

I Option	
Blank	Cushion needle position change R (standard)
S	Cushion needle position change S
T	Cushion needle position change T

J Accessory	
I	Rod eye
Y	Rod clevis (pin and snap ring included)
B1	Eye bracket
B2	Clevis bracket (pin and snap ring included)
B3	Eye bracket
B4	Trunnion No. 2 bracket (2 pcs./set)

⚠ Precautions for model No. selection

*1 : Mounting bracket will be shipped with the product. (Trunnion are assembled at shipment.)
*2 : If the stroke exceeds the max. stroke, refer to Ending Page 69.
*3 : Refer to page 584 for the min. stroke with switch.
*4 : Switches are shipped with the product.
*5 : When selecting TA, TD, TB or TE mounting, the switch quantity is limited to "H" (1 on head side) for TA and TD, and "R" (1 on rod side) for TB and TE.
*6 : When selecting TA, TD, TB or TE mounting format, the cushion needle position is blank and fixed at S, with no options available.
*7 : "I" and "Y" cannot be selected together.
*8 : Refer to Ending Page 85 for custom specifications of rod end form.
*9 : Refer to page 448 for combination of variations/options.

[Example of model No.]

SCA2-G2-LB-50B-75-T2YLH-R-SI

Model: Medium bore size cylinder

A Degree of protection level	: Coolant proof scraper + packing NBR
B Mounting	: Axial foot
C Bore size	: ø50 mm
D Port thread	: Rc thread
E Cushion	: Both sides cushioned
F Stroke	: 75 mm
G Switch model No.	: Proximity switch T2YLH, lead wire 1 m
H Switch quantity	: 1 on rod side
I Option	: Cushion needle position change
J Accessory	: Rod eye

How to order switch

● Switch body + mounting bracket set

SCA2 - G2 - T2YLH - 40

- 40 → Bore size (Item Ⓒ on page 586)
- T2YLH → Switch model No. (Item Ⓖ on page 586)

● Mounting bracket set

SCA2 - G2 - T - 50

- 50 → Bore size (Item Ⓒ on page 586)
- T → Mounting bracket

● Switch body only

SW - T2YLH

- T2YLH → Switch model No. (Item Ⓖ on page 586)

How to order mounting bracket

Bore size (mm) / Mounting bracket	ø40	ø50	ø63	ø80	ø100
Foot (LB) *2	S1-LB-40	S1-LB-50	S1-LB-63	S1-LB-80	S1-LB-100
Flange (FA/FB)	S1-FA-40	S1-FA-50	S1-FA-63	S1-FA-80	S1-FA-100
Eye bracket (CA)	S1-CA-40	S1-CA-50	S1-CA-63	S1-CA-80	S1-CA-100
Clevis bracket (CB)	S1-CB-40	S1-CB-50	S1-CB-63	S1-CB-80	S1-CB-100

*1 : For material of the mounting bracket, refer to page 456.
*2 : The foot mounting bracket is provided as 2 pcs./set.
*3 : All mounting brackets are supplied with mounting bolts.

Internal structure and parts list

● Degree of protection: Packing NBR
SCA2 - G2

● Degree of protection: Packing FKM
SCA2 - G3

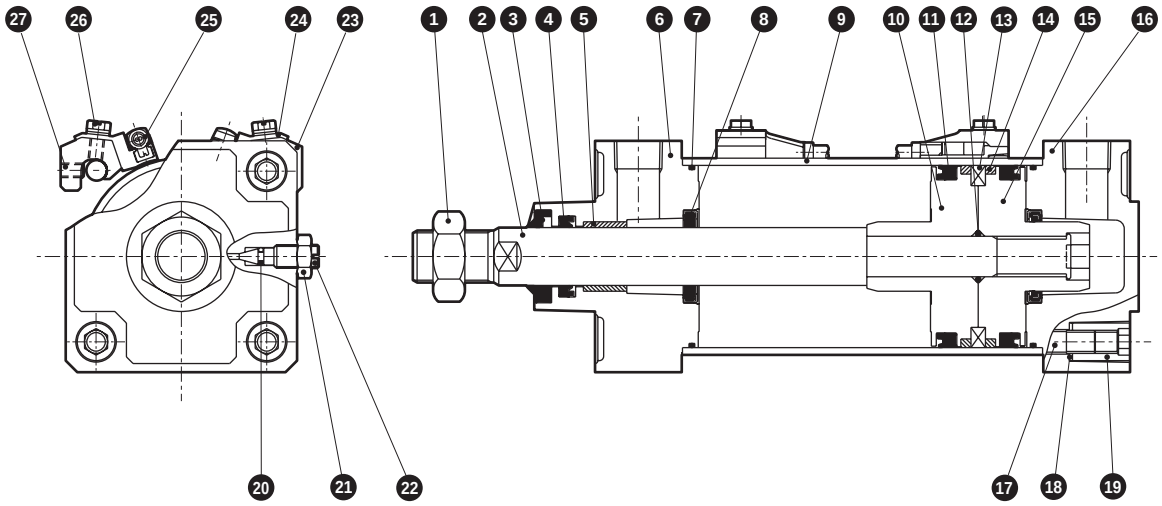

Main parts list

No.	Part name		Material	Remarks	No.	Part name		Material	Remarks
1	Rod nut		Stainless steel		13	Magnet		Plastic	
2	Piston rod		Stainless steel	Industrial chrome plating	14	Wear ring		Polyacetal resin	
3	Scraper	G2	Nitrile rubber		15	Piston H		Aluminum alloy	Chromate treatment
		G3	Fluoro rubber		16	Head cover		Aluminum alloy	Paint
4	Rod packing	G2	Nitrile rubber		17	Tie rod		Steel	Zinc chromate treatment
		G3	Fluoro rubber		18	Conical spring washer		Steel	Black finish
5	Bush		Oil impregnated bearing alloy		19	Round nut		Steel	Zinc chromate treatment
6	Rod cover		Aluminum alloy	Paint	20	Needle gasket	G2	Nitrile rubber	
7	Cylinder gasket	G2	Nitrile rubber				G3	Fluoro rubber	
		G3	Fluoro rubber		21	Needle nut		Copper alloy	Nickel plating
8	Cushion packing	G2	Nitrile rubber, steel		22	Cushion needle		Copper alloy	Nickel plating
		G3	Fluoro rubber, steel		23	Switch mounting base		Aluminum alloy	
9	Cylinder tube		Aluminum alloy	Hard alumite treatment	24	Switch holder		Aluminum alloy	
10	Piston R		Aluminum alloy	Chromate treatment	25	Cylinder switch			
11	Piston packing	G2	Nitrile rubber		26	Slotted hexagon head bolt/captive washer		Stainless steel	
		G3	Fluoro rubber		27	Hexagon socket set screw		Stainless steel	
12	Piston gasket	G2	Nitrile rubber						
		G3	Fluoro rubber						

Repair parts list

No./part name / Bore size (mm)	Kit No.	Repair parts No.
ø40	SCA2-G2- 40K	3 4 7 8 11 14 20
	SCA2-G3- 40K	
ø50	SCA2-G2- 50K	
	SCA2-G3- 50K	
ø63	SCA2-G2- 63K	
	SCA2-G3- 63K	
ø80	SCA2-G2- 80K	
	SCA2-G3- 80K	
ø100	SCA2-G2-100K	
	SCA2-G3-100K	

*1: Specify the kit No. when placing an order.

Dimensions

● Basic (00)

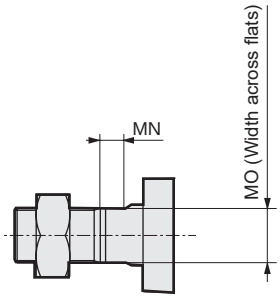

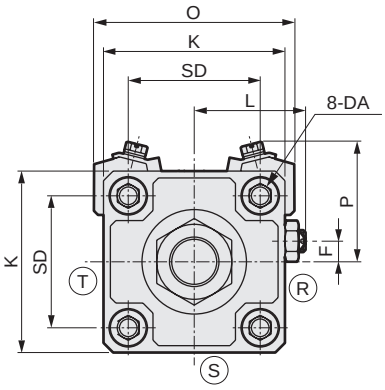

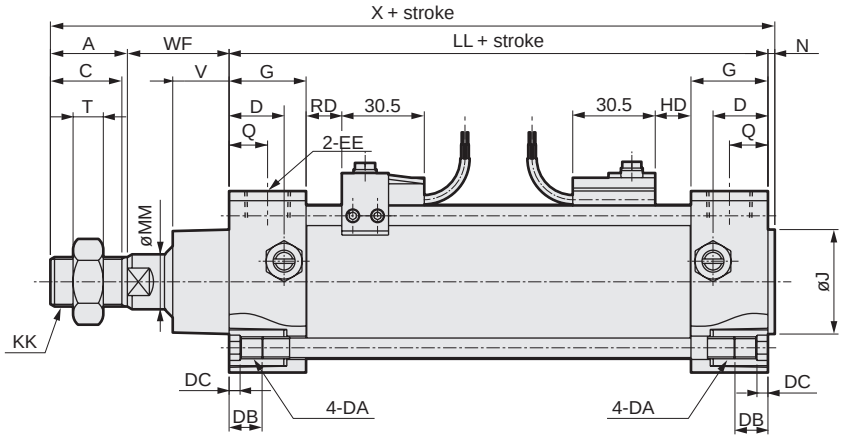

Code	Basic (00) with switch														
Bore size (mm)	A	C	D	DA	DB	DC	EE	F	G	J	K	KK	L	LL	MM
ø40	22	20	18	M8	12	4	Rc1/4	7.5	26	31	57	M14x1.5	38 to 39.5	93	16
ø50	28	26	20	M8	12	4	Rc3/8	0	28	38	66	M18x1.5	41 to 43.5	101	20
ø63	28	26	22	M8	12	4	Rc3/8	0	30	38	80	M18x1.5	47.5 to 50.0	105	20
ø80	36	34	26	M12	16	5	Rc1/2	0	34	43	98	M22x1.5	56 to 59	116	25
ø100	45	43	28	M12	16	5	Rc1/2	0	36	51	118	M26x1.5	66 to 69	128	30

Code										With switch			
Bore size (mm)	MN	MO	N	Q	SD	T	V	WF	X	HD	P	O	RD
ø40	8	14	2	13	40.5	8	17	33.5	150.5	10	42	66	10
ø50	8	17	2.5	14	48	11	20	37	168.5	12	44	73	12
ø63	8	17	3	15	59	11	20.5	35	171	12	47	84	12
ø80	11	22	3.5	17	74	13	23	48	203.5	13.5	58	104	13.5
ø100	13	27	4	18	90	16	30.5	53	230	17.5	64	120	17.5

* Installation dimensions of other mounting are the same as those of the SCA2 (standard). Refer to pages 458 to 469.
* For the dimensions of the accessories, refer to pages 470 and 471.

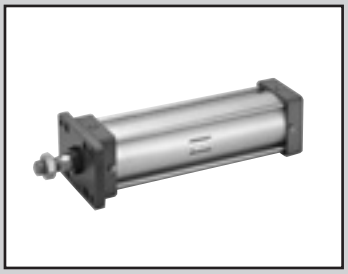

Medium bore size cylinder
Double acting/coil scraper

SCA2-G1 Series

Double acting/anti-spatter adherence

SCA2-G4 Series

● Bore size: ø40/ø50/ø63/ø80/ø100

JIS symbol

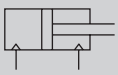

RoHS CAD

Specifications

Item		SCA2-G1/G4 SCA2-G1L2/G4L2				
Bore size	mm	ø40	ø50	ø63	ø80	ø100
Actuation		Double acting				
Working fluid		Compressed air				
Max. working pressure	MPa	1.0 (≈150 psi, 10 bar)				
Min. working pressure	MPa	0.05 (≈7.3 psi, 0.5 bar)				
Proof pressure	MPa	1.6 (≈230 psi, 16 bar)				
Ambient temperature	°C	-10 (14°F) to 60 (140°F) (no freezing)				
Port size		Rc1/4	Rc3/8		Rc1/2	
Stroke tolerance	mm	$^{+0.9}_{0}$(to 360), $^{+1.4}_{0}$(to 800)				
Working piston speed	mm/s	50 to 1000 (Operate within the allowable absorbed energy.)				
Cushion		Air cushion				
Effective air cushion length	mm	14.6	16.6	16.6	20.6	23.6
Lubrication		Not required (use turbine oil class 1 ISO VG32 if necessary for lubrication)				
Allowable absorbed energy	J Cushioned	4.29	8.37	15.8	27.9	49.8
	J Without cushion	0.067	0.079	0.079	0.201	0.301
		Without any cushion, this product cannot absorb large energy generated by an external load. We recommend using an external shock absorber.				

Stroke

Bore size (mm)	Standard stroke (mm)	Max. stroke (mm)	Available stroke (mm)	Min. stroke (mm)
ø40	25/50/75/100/150/200/250/300/350/400/450/500	600	1600	1
ø50			2000	
ø63			2500	
ø80		700		
ø100		800		

*1: The custom stroke is available in 1 mm increments.
*2: For types with switch, minimum stroke varies depending on the mounting method. Refer to the following table.

Min. stroke with switch (T2YD switch)

	Different surface mounting				Same surface mounting				Center trunnion mounting				Rod side trunnion mounting No position detection at rod side stroke end.	Head side trunnion mounting No position detection at head side stroke end.
Switch quantity	1	2	3	4	1	2	3	4	1	2	3	4	1	1
ø40	20	20	25	40	20	60	105	150	105	105	165	165	50	50
ø50	15	15	25	40	15	15	60	60	100	100	100	100	45	45
ø63	15	15	25	40	15	15	60	60	105	105	105	105	50	50
ø80	15	15	30	45	15	15	60	60	110	110	110	110	55	55
ø100	10	15	0	45	10	15	60	60	120	120	120	120	60	60

*1: When the stroke is 15 mm or less, the two switches could turn ON at the same time. In this case, adjust switch mounting positions to be as far apart as possible.

Min. stroke with switch (H switch)

(Unit: mm)

Sketch	When mounted on different surfaces				When mounted on same surface				With intermediate support (hole) trunnion				With rod side supporting hole	With head side supporting hole
	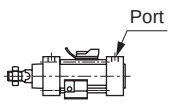				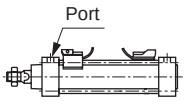				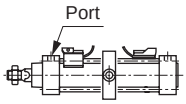				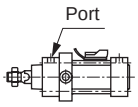 Position cannot be detected at the rod side stroke end.	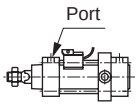 Position cannot be detected at the head side stroke end.
Switch quantity / Bore size (mm)	1	2	3	4	1	2	3	4	1	2	3	4	1	1
ø40	10	20	35	50	10	50	100	150	86	86	92	92	38	38
ø50	10	20	40	55	10	50	100	150	86	86	92	92	36	36
ø63	10	20	40	55	10	35	100	150	91	91	97	97	41	41
ø80	10	20	40	55	10	20	100	150	96	96	102	102	44	44
ø100	10	20	40	55	10	20	100	150	106	106	112	112	50	50

*1: When the stroke is 15 mm or less, the two switches could turn ON at the same time. In this case, adjust switch mounting positions to be as far apart as possible.

Switch specifications

Item	2-wire proximity		2-wire reed		
	T2YD		H0		H0Y (2-color LED)
Applications	Dedicated for programmable controller		For programmable controller, relay		Dedicated for programmable controller
Load voltage	24 VDC ±10%		12/24 VDC	110 VAC	24 VDC
Load current	5 to 20 mA		5 to 50 mA	7 to 20 mA	5 to 20 mA
Indicator	Red/green LED (Lit when ON)		Green LED (Lit when ON)		Red/green LED (Lit when ON)
Internal voltage drop	6V or less		5V or less		6V or less
Leakage current	1.0 mA or less		10 μA or less		
Output delay time *1 (ON delay, OFF delay)	60 ms or less		-		
Lead wire length	1 m (oil resistant vinyl cabtyre cable ø6, 0.5 mm^2 x 2-conductor) *2, *3	0.3 m (flame-resistant cabtyre cable ø6, 0.5 mm^2 x 2-conductor with M12 cable connector)	1 m (flame-resistant cabtyre cable ø6, 0.5 mm^2 x 2-conductor)		
Insulation resistance	100 MΩ or more at 500 VDC megger		100 MΩ and over with 500 VDC megger		
Withstand voltage	No failure after 1 minute of 1,000 VAC application.		No failure after 1 minute of 1,000 VAC application.		
Max. shock resistance	980 m/s^2		294 m/s^2		
Ambient temperature	-10 to +60°C		-10 to +60°C		
Degree of protection	JIS C0920 (water-tight), IEC standards IP67, oil resistance		IEC Standard IP67, JIS C0920 (water-tight), oil resistance		
Weight g	1 m:61 3 m:166 5 m:272		1 m:76 3 m:181 5 m:289		

*1: Indicates the time from magnetic sensor detection of the piston magnet until switch output.
*2: 3 m and 5 m lead wires are available as options.
*3: Flame-resistant lead wires are available as options.
*4: Switch for AC magnetic field (T2YD) cannot be used in DC magnetic field.

Cylinder weight

(Unit: kg)

Bore size (mm)	Product weight when stroke (S) = 0 mm							Switch weight	Mounting bracket weight		Additional weight per S = 100 mm
	Basic (00)	Foot (LB)	Flange (FA, FB)	Special flange (FC)	Eye bracket (CA)	Clevis bracket (CB)	Trunnion (TA, TB, TC)		T type	H type	
ø40	0.84	1.01	1.25	0.93	1.16	1.20	1.22	Refer to the weight in the switch specifications.	0.024	0.028	0.39
ø50	1.23	1.48	1.72	1.34	1.61	1.64	1.77		0.022	0.026	0.46
ø63	1.63	2.00	2.72	1.81	2.20	2.25	2.48		0.020	0.024	0.50
ø80	2.63	3.37	4.49	2.99	3.90	4.11	3.97		0.026	0.029	0.90
ø100	4.24	5.15	6.98	4.79	5.88	6.06	6.81		0.024	0.028	1.12

(Example) Product weight of SCA2-G4-LB-50B-200-HO-D

- Product weight for 0 mm stroke..... 1.48 kg
- Additional weight for 200 mm stroke ..... 0.46x $\frac{200}{100}$ = 0.92 kg
- Weight of 2 HO switches ..... 0.076x2 = 0.152 kg
- Weight of 2 mounting brackets..... 0.026x2 = 0.052 kg
- Product weight..... 1.48 + 0.92 + 0.152 + 0.052 = 2.604 kg

Theoretical thrust table

(Unit: N)

Bore size (mm)	Operating direction	Working pressure MPa											
		0.05	0.1	0.15	0.2	0.3	0.4	0.5	0.6	0.7	0.8	0.9	1.0
ø40	Push	62.8	$1.26x10^2$	$1.88x10^2$	$2.51x10^2$	$3.77x10^2$	$5.03x10^2$	$6.28x10^2$	$7.54x10^2$	$8.80x10^2$	$1.01x10^3$	$1.13x10^3$	$1.26x10^3$
	Pull	52.8	$1.06x10^2$	$1.58x10^2$	$2.11x10^2$	$3.17x10^2$	$4.22x10^2$	$5.28x10^2$	$6.33x10^2$	$7.39x10^2$	$8.44x10^2$	$9.50x10^2$	$1.06x10^3$
ø50	Push	98.2	$1.96x10^2$	$2.95x10^2$	$3.93x10^2$	$5.89x10^2$	$7.85x10^2$	$9.82x10^2$	$1.18x10^3$	$1.37x10^3$	$1.57x10^3$	$1.77x10^3$	$1.96x10^3$
	Pull	82.5	$1.65x10^2$	$2.47x10^2$	$3.30x10^2$	$4.95x10^2$	$6.60x10^2$	$8.25x10^2$	$9.90x10^2$	$1.15x10^3$	$1.32x10^3$	$1.48x10^3$	$1.65x10^3$
ø63	Push	$1.56x10^2$	$3.12x10^2$	$4.68x10^2$	$6.23x10^2$	$9.35x10^2$	$1.25x10^3$	$1.56x10^3$	$1.87x10^3$	$2.18x10^3$	$2.49x10^3$	$2.81x10^3$	$3.12x10^3$
	Pull	$1.40x10^2$	$2.80x10^2$	$4.20x10^2$	$5.61x10^2$	$8.41x10^2$	$1.12x10^3$	$1.40x10^3$	$1.68x10^3$	$1.96x10^3$	$2.24x10^3$	$2.52x10^3$	$2.80x10^3$
ø80	Push	$2.51x10^2$	$5.03x10^2$	$7.54x10^2$	$1.01x10^3$	$1.51x10^3$	$2.01x10^3$	$2.51x10^3$	$3.02x10^3$	$3.52x10^3$	$4.02x10^3$	$4.52x10^3$	$5.03x10^3$
	Pull	$2.27x10^2$	$4.54x10^2$	$6.80x10^2$	$9.07x10^2$	$1.36x10^3$	$1.81x10^3$	$2.27x10^3$	$2.72x10^3$	$3.17x10^3$	$3.63x10^3$	$4.08x10^3$	$4.54x10^3$
ø100	Push	$3.93x10^2$	$7.85x10^2$	$1.18x10^3$	$1.57x10^3$	$2.36x10^3$	$3.14x10^3$	$3.93x10^3$	$4.71x10^3$	$5.50x10^3$	$6.28x10^3$	$7.07x10^3$	$7.85x10^3$
	Pull	$3.57x10^2$	$7.15x10^2$	$1.07x10^3$	$1.43x10^3$	$2.14x10^3$	$2.86x10^3$	$3.57x10^3$	$4.29x10^3$	$5.00x10^3$	$5.72x10^3$	$6.43x10^3$	$7.15x10^3$

How to order

No switch (built-in magnet for switch)

SCA2 - G4 —— LB - 40 B - 100 ———— S I

With switch (built-in magnet for switch)

SCA2 - G4 —— LB - 40 B - 100 - T2YD - R - S I

With strong magnetic field proof (for H0, H0Y switches) switch (built-in magnet for switch)

SCA2 - G4 L2 - LB - 40 B - 100 - H0Y - R - S I

Ⓐ Model No.

Ⓑ Mounting *1

Ⓒ Bore size

Ⓓ Cushion

Ⓔ Stroke *2 *3

Ⓕ Switch model No. *4

Ⓖ Switch quantity *5

Ⓗ Option *6

Ⓘ Accessory *7

Code	Description
Ⓐ Model No.	
G1	Double acting/coil scraper
G4	Double acting/anti-spatter adherence
Ⓑ Mounting	
00	Basic
LB	Axial foot
FA	Rod side flange
FB	Head side flange
FC	Head side special flange
CA	Eye bracket
CB	Clevis bracket
TC	Intermediate trunnion
TA	Rod side trunnion
TB	Head side trunnion
TF	Intermediate supporting hole trunnion (ø40 is not available)
TD	Rod side hole trunnion (ø40 is not available)
TE	Head side hole trunnion (ø40 is not available)
Ⓒ Bore size (mm)	
40	ø40
50	ø50
63	ø63
80	ø80
100	ø100
Ⓓ Cushion	
B	Both sides cushioned
R	Rod side cushioned
H	Head side cushioned
N	Without cushion

Ⓔ Stroke (mm)

Bore size	Stroke *3	Available stroke	Custom stroke
ø40	1 to 600	1600	In 1 mm increments
ø50	1 to 600	2000	
ø63	1 to 600	2500	
ø80	1 to 700		
ø100	1 to 800		

Ⓕ Switch model No.

Grommet	Contact	Voltage AC	Voltage DC	Indicator	Lead wire
T2YD*	Proximity		●	2-color LED (AC magnetic field)	2-wire
T2YDT*	Proximity		●		
H0*	Reed	●	●	Strong magnetic field proof switch, strong magnetic field, 2-color LED	2-wire
H0Y*	Reed		●		

* Lead wire length	
Blank	1 m (standard)
3	3 m (option)
5	5 m (option)

Ⓖ Switch quantity	
R	1 on rod side
H	1 on head side
D	2
T	3

Ⓗ Option	
Blank	Cushion needle position R (standard)
S	Cushion needle position S
T	Cushion needle position T

Ⓘ Accessory	
I	Rod eye
Y	Rod clevis (pin and snap ring included)
B1	Eye bracket
B2	Clevis bracket (pin and snap ring included)
B3	Eye bracket
B4	Trunnion No. 2 bracket (2 pcs./set)

⚠ Precautions for model No. selection

*1 : Mounting bracket will be shipped with the product. (Trunnion are assembled at shipment.)
*2 : If the stroke exceeds the max. stroke, refer to Ending Page 69.
*3 : Refer to page 590 for the min. stroke with switch.
*4 : Switches are shipped with the product.
*5 : When selecting TA, TD, TB or TE mounting, the switch quantity is limited to "H" (1 on head side) for TA and TD, and "R" (1 on rod side) for TB and TE.
*6 : When selecting TA, TD, TB or TE mounting format, the cushion needle position is blank and fixed at S, with no options available.
*7 : "I" and "Y" cannot be selected together.
*8 : Refer to Ending Page 85 for custom specifications of rod end form.
*9 : Refer to page 448 for combination of variations/options.

[Example of model No.]

SCA2-G4-LB-40B-100-T2YD-R-SI

Model: Medium bore size cylinder

Ⓐ Model No. : Double acting/anti-spatter adherence
Ⓑ Mounting : Axial foot
Ⓒ Bore size : ø40 mm
Ⓓ Cushion : Both sides cushioned
Ⓔ Stroke : 100 mm
Ⓕ Switch model No. : Proximity switch T2YD, lead wire 1 m
Ⓖ Switch quantity : 1 on rod side
Ⓗ Option : Cushion needle position S
Ⓘ Accessory : Rod eye

How to order H switch

● Switch body + mounting bracket set

SCA2-L2 - H0 - 40

- H0: Switch model No. (Item Ⓕ on page 592)
- 40: Bore size (Item Ⓒ on page 592)

● Switch body only

SW - H0

- H0: Switch model No. (Item Ⓕ on page 592)

● Mounting bracket set

SCA2-L2 - H - 40

- 40: Bore size (Item Ⓒ on page 592)

How to order T2YD switch

● Switch body + mounting bracket set

SCA2 - T2YD - 40

- T2YD: Switch model No. (Item Ⓕ on page 592)
- 40: Bore size (Item Ⓒ on page 592)

● Switch body only

SW - T2YD

- T2YD: Switch model No. (Item Ⓕ on page 592)

● Mounting bracket set

SCA2 - T - 40

- 40: Bore size (Item Ⓒ on page 592)

How to order mounting bracket

Bore size (mm) / Mounting bracket	ø40	ø50	ø63	ø80	ø100
Foot (LB) *2	S1-LB-40	S1-LB-50	S1-LB-63	S1-LB-80	S1-LB-100
Flange (FA/FB)	S1-FA-40	S1-FA-50	S1-FA-63	S1-FA-80	S1-FA-100
Eye bracket (CA)	S1-CA-40	S1-CA-50	S1-CA-63	S1-CA-80	S1-CA-100
Clevis bracket (CB)	S1-CB-40	S1-CB-50	S1-CB-63	S1-CB-80	S1-CB-100

*1 : For material of the mounting bracket, refer to page 456.
*2 : The foot mounting bracket is provided as 2 pcs./set.
*3 : All mounting brackets are supplied with mounting bolts.

Internal structure and parts list

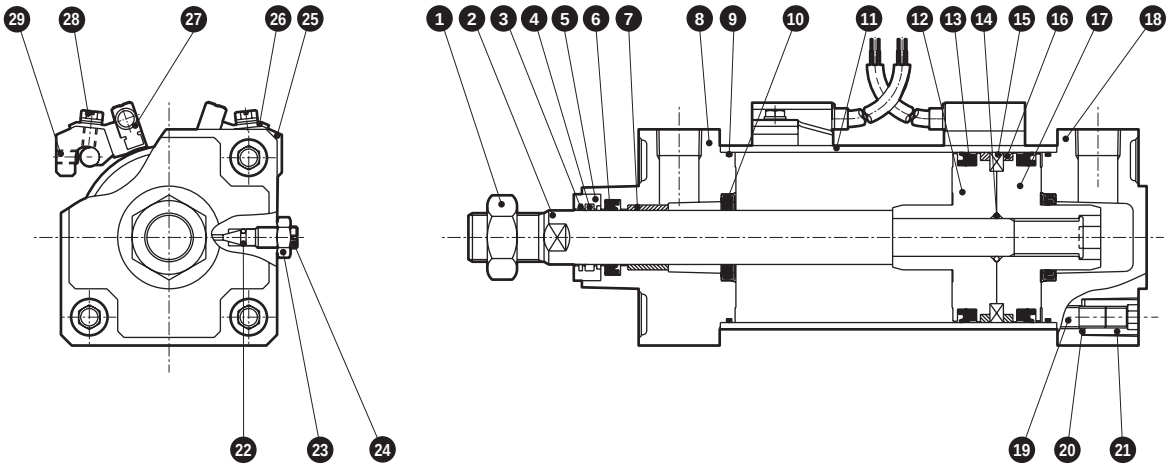

No.	Part name	Material	Remarks	No.	Part name	Material	Remarks
1	Rod nut	Steel	Zinc chromate	16	Wear ring	Polyacetal resin	
2	Piston rod	Steel	Industrial chrome plating	17	Piston H	Aluminum alloy die-casting	
3	Coil scraper	Phosphor bronze		18	Head cover	Aluminum alloy die-casting	Paint
4	Lube keeping structure	Special rubber	”G4” only	19	Tie rod	Steel	Zinc chromate
5	Adaptor	Stainless steel		20	Conical spring washer	Steel	Black finish
6	Rod packing	Nitrile rubber		21	Round nut	Steel	Zinc chromate
7	Bush	Oil impregnated bearing alloy		22	Needle gasket	Nitrile rubber	
8	Rod cover	Aluminum alloy die-casting	Paint	23	Needle nut	Copper alloy	Nickel plating
9	Cylinder gasket	Nitrile rubber		24	Cushion needle	Copper alloy	Nickel plating
10	Cushion packing	Nitrile rubber, steel	Special	With switch			
11	Cylinder tube	Aluminum alloy	Hard alumite treatment	25	Switch mounting base	Aluminum alloy	
12	Piston R	Aluminum alloy die-casting		26	Switch holder	Aluminum alloy	
13	Piston packing	Nitrile rubber		27	Cylinder switch		
14	Piston gasket	Nitrile rubber		28	Slotted hexagon head bolt/captive washer	Stainless steel	
15	Magnet	Plastic		29	Hexagon socket set screw	Alloy steel	Black finish

Repair parts list (SCA2-G1)

Bore size	Kit No.	Repair parts No.
ø40	SCA2-G1-40K	3 6 9 10 13 16 22
ø50	SCA2-G1-50K	
ø63	SCA2-G1-63K	
ø80	SCA2-G1-80K	
ø100	SCA2-G1-100K	

Note: Specify the kit No. when placing an order.

· No repair parts kit is available for SCA2-G4 Series.

Dimensions

● Basic (00)

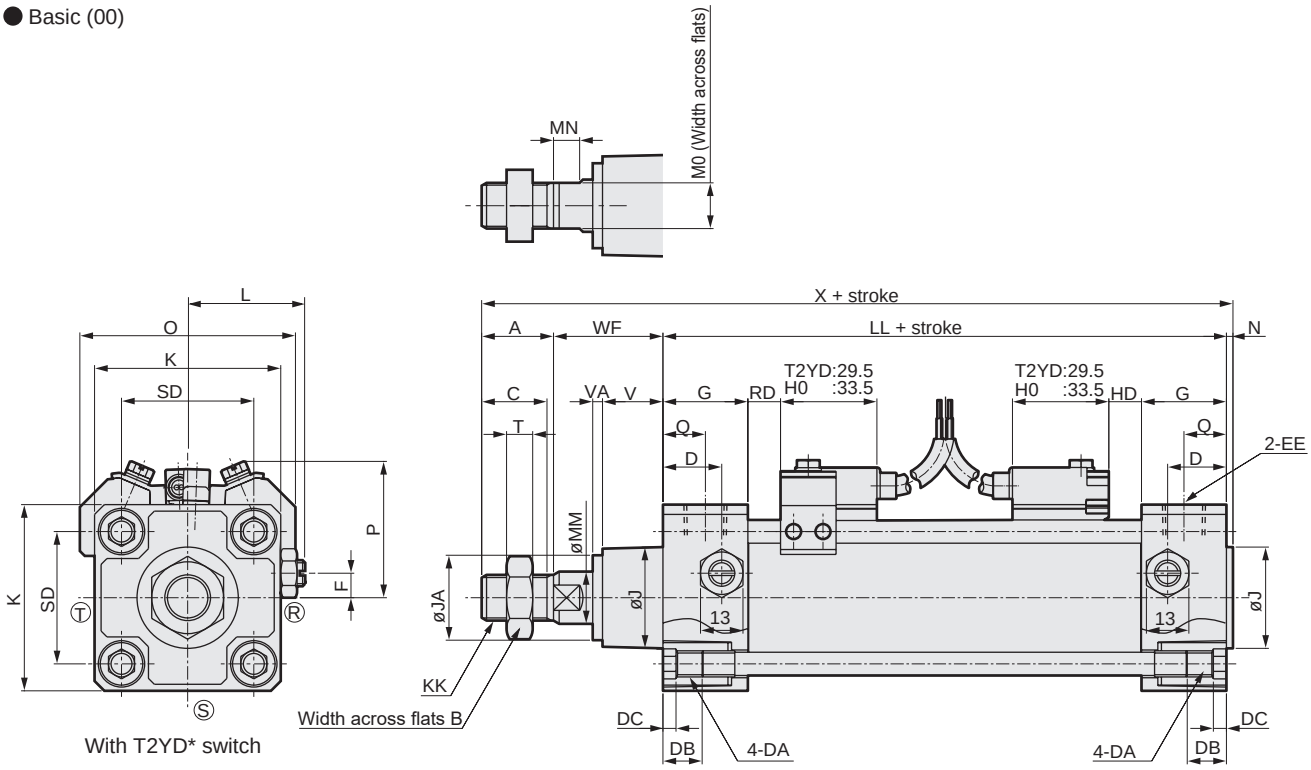

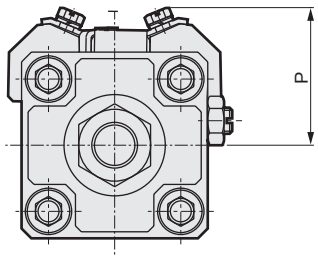

With H0* switch

RD: Rod side max. sensitivity position
HD: Head side max. sensitivity position

Code	Basic (00) Basic dimensions																				
Bore size (mm)	A	B	C	D	DA	DB	DC	EE	F	G	J	JA	K	KK	L	LL	MM	MN	MO	N	Q
ø40	22	22	20	18	M8	12	4	Rc1/4	7.5	26	31	26	57	M14x1.5	38 to 39.5	93	16	8	14	2	13
ø50	28	27	26	20	M8	12	4	Rc3/8	0	28	38	32	66	M18x1.5	41 to 43.5	101	20	8	17	2.5	14
ø63	28	27	26	22	M8	12	4	Rc3/8	0	30	38	32	80	M18x1.5	47.5 to 50.0	105	20	8	17	3	15
ø80	36	32	34	26	M12	16	5	Rc1/2	0	34	43	37	98	M22x1.5	56 to 59	116	25	11	22	3.5	17
ø100	45	41	43	28	M12	16	5	Rc1/2	0	36	51	42	118	M26x1.5	66 to 69	128	30	13	27	4	18

Code	Basic (00) Basic							With T2YD* switch				With H0* switch			
Bore size (mm)	SD	T	V	VA G1	VA G4	WF	X	HD	P	O	RD	HD	P	O	RD
ø40	40.5	8	18.5	0	3	33.5	150.5	10	40	66	10	4	42	66	4
ø50	48	11	20.5	0	3	37	168.5	12	44.5	73	12	6	44	73	6
ø63	59	11	21	0	3	35	171	12	50	84	12	6	47	84	6
ø80	74	13	23.5	0	3	48	203.5	13.5	60	104	13.5	7.5	58	104	7.5
ø100	90	16	32	0	2	53	230	17.5	68	120	17.5	11.5	64	120	11.5

*1: ⓇⓈⓉ indicates the cushion needle position.

* Installation dimensions of other mounting are the same as those of the SCA2 (standard). Refer to pages 458 to 469.
* For the dimensions of the accessories, refer to pages 470 and 471.

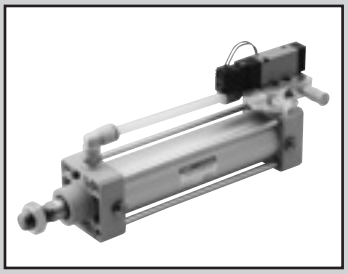

Medium bore size cylinder
Double acting/with valve

SCA2-V Series

● Bore size: ø40/ø50/ø63/ø80/ø100

JIS symbol

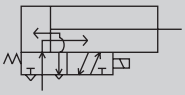

(Single solenoid
Push out when energized)

RoHS CAD

Specifications

Item		SCA2-V1/V2/V (with valve)				
Bore size	mm	ø40	ø50	ø63	ø80	ø100
Actuation		Double acting				
Working fluid		Compressed air				
Max. working pressure	MPa	0.7 (≈100 psi, 7 bar)				
Min. working pressure	MPa	0.15 (≈22 psi, 1.5 bar)				
Proof pressure	MPa	1.05 (≈150 psi, 10.5 bar)				
Ambient temperature	°C	-5 (23°F) to 50 (122°F) (no freezing)				
Port size		Rc1/4	Rc3/8		Rc1/2	
Stroke tolerance	mm	$^{+0.9}_{0}$ (to 360) $^{+1.4}_{0}$ (to 800)				
Working piston speed *1	mm/s	50 to 500				50 to 450
Cushion		Air cushion				
Effective air cushion length	mm	14.6	16.6	16.6	20.6	23.6
Lubrication		Not required (use turbine oil class 1 ISO VG32 if necessary for lubrication)				
Allowable absorbed energy J	Cushioned	4.29	8.37	15.8	27.9	49.8
	Without cushion	0.067	0.079	0.079	0.201	0.301
		Without any cushion, this product cannot absorb large energy generated by an external load. We recommend using an external shock absorber.				

*1: Operate within the absorbed energy.
500 mm/s piston speed of ø100 bore size can be attained when a silencer (SLW-10A) is used instead of a metering valve (SMW-10A).

Valve specifications

Model No. / Item	V1 SCA2-V2-40/50 V			V1 SCA2-V2-63 V			V1 SCA2-V2-80/100 V		
Model No. (*2)	4KB2*9-00-voltage			4KB3*9-00-voltage			4KB4*9-00-voltage		
Rated voltage	100 VAC(50/60 Hz)	200 VAC(50/60 Hz)	24 VDC	100 VAC(50/60 Hz)	200 VAC(50/60 Hz)	24 VDC	100 VAC(50/60 Hz)	200 VAC(50/60 Hz)	24 VDC
Starting current (A)	0.056/0.044	0.028/0.022	0.075	0.046/0.042	0.023/0.021	0.075	0.046/0.042	0.023/0.021	0.075
Holding current (A)	0.028/0.022	0.014/0.011		0.028/0.021	0.014/0.011		0.028/0.022	0.014/0.011	
Power consumption (W)	1.8/1.4	1.8/1.4	1.8	1.6/1.3	1.6/1.3	1.8	1.6/1.3	1.6/1.3	1.8
Rated voltage fluctuation	±10%	±10%	±10%	±10%	±10%	±10%	±10%	±10%	±10%
Thermal class	Class B molded coil	Class B molded coil	Class B molded coil	Class B molded coil	Class B molded coil	Class B molded coil	Class B molded coil	Class B molded coil	Class B molded coil
Lead wire outlet	Grommet lead wire (300 mm)								

*1: Refer to "Pneumatic Valves (CB-023SA)" for details on valves.
*2: For operating method V, *=2; for operating methods V1 and V2, *=1

Stroke

Bore size (mm)	Standard stroke (mm)	Max. stroke (mm)	Min. stroke (mm)
ø40	50/75/100/ 150/200/250/ 300/350/400/ 450/500	600	50
ø50			
ø63			
ø80		700	
ø100		800	

*1: The custom stroke is available in 1 mm increments.
*2: Less than 50 mm stroke is not available with or without switch.

Min. stroke with switch

● Min. stroke with T0/T5 switches

	Different surface mounting				Same surface mounting				Center trunnion mounting				Rod side trunnion mounting position cannot be detected at the rod side stroke end.
Switch quantity	1	2	3	4	1	2	3	4	1	2	3	4	1
ø40	50(50)	50(50)	50(50)	60(60)	50(50)	60(50)	105(75)	150(102)	110 (110)	110 (110)	175 (145)	175 (145)	50(50)
ø50	50(50)	50(50)	50(50)	60(60)	50(50)	50(50)	65(50)	65(60)	135(135)	135(135)	135 (135)	135 (135)	60(60)
ø63	50(50)	50(50)	50(50)	60(60)	50(50)	50(50)	70(55)	70(60)	110(95)	110(95)	110 (100)	110 (100)	50(50)
ø80	50(50)	50(50)	50(50)	65(65)	50(50)	50(50)	70(55)	70(65)	115(85)	115(85)	115 (105)	115 (105)	55(50)
ø100	50(50)	50(50)	50(50)	70(70)	50(50)	50(50)	70(55)	70(70)	125(95)	125(95)	125 (115)	125 (115)	60(50)

*1: The values in ( ) are of T*V (L-shaped lead wire).
*2: Less than 50 mm stroke is not available.
*3: T8 switch cannot be installed.

● Min. stroke with T2/T3 switches

	Different surface mounting				Same surface mounting				Center trunnion mounting				Rod side trunnion mounting position cannot be detected at the rod side stroke end.
Switch quantity	1	2	3	4	1	2	3	4	1	2	3	4	1
ø40	50(50)	50(50)	50(50)	50(50)	50(50)	60(50)	105(75)	150 (105)	105(75)	105(75)	165 (135)	165 (135)	50(50)
ø50	50(50)	50(50)	50(50)	50(50)	50(50)	50(50)	60(50)	60(50)	105(75)	105(75)	105(75)	105(75)	50(50)
ø63	50(50)	50(50)	50(50)	50(50)	50(50)	50(50)	60(50)	60(50)	110(80)	110(80)	110(85)	110(85)	50(50)
ø80	50(50)	50(50)	50(50)	50(50)	50(50)	50(50)	60(50)	60(50)	115(85)	115(85)	115(90)	115(90)	55(50)
ø100	50(50)	50(50)	50(50)	50(50)	50(50)	50(50)	60(50)	60(50)	125(95)	125(95)	125 (100)	125 (100)	60(50)

*1: The values in ( ) are of T*V (L-shaped lead wire).
*2: Less than 50 mm stroke is not available.

● Min. stroke with T1/T2Y/T3Y/T2YD switches

	Different surface mounting				Same surface mounting				Center trunnion mounting				Rod side trunnion mounting position cannot be detected at the rod side stroke end.
Switch quantity	1	2	3	4	1	2	3	4	1	2	3	4	1
ø40	50(50)	50(50)	50(50)	50(50)	50(50)	60 (50)	105 (75)	150 (105)	105 (75)	105 (75)	165 (135)	165 (135)	50 (50)
ø50	50(50)	50(50)	50(50)	50(50)	50(50)	50(50)	60 (50)	60 (50)	100 (70)	100 (70)	100 (75)	100 (75)	50 (50)
ø63	50(50)	50(50)	50(50)	50(50)	50(50)	50(50)	60 (50)	60 (50)	105 (75)	105 (75)	105 (85)	105 (85)	50 (50)
ø80	50(50)	50(50)	50(50)	50(50)	50(50)	50(50)	60 (50)	60 (50)	110 (80)	110 (80)	110 (90)	110 (90)	50 (50)
ø100	50(50)	50(50)	50(50)	50(50)	50(50)	50(50)	60 (50)	60 (50)	120 (90)	120 (90)	120 (100)	120 (100)	60(50)

*1: The values in ( ) are of T*V (L-shaped lead wire). T2YD does not have an L-shaped lead wire (V).
*2: When the stroke is 15 mm or less, the two switches could turn ON at the same time. In this case, adjust switch mounting positions to be as far apart as possible.

● Min. stroke with T2W/T3W switches

	Different surface mounting				Same surface mounting				Center trunnion mounting				Rod side trunnion mounting position cannot be detected at the rod side stroke end.
Switch quantity	1	2	3	4	1	2	3	4	1	2	3	4	1
ø40	50 (50)	50 (50)	50 (50)	50 (50)	50 (50))	65 (50)	110 (80)	155 (110)	110 (80)	110(80)	170 (140)	170 (140)	50 (50)
ø50	50 (50)	50 (50))	50 (50)	50 (50)	50 (50)	50 (50)	65(50)	65 (50)	110 (80)	110 (80)	110 (80)	110 (80)	50 (50)
ø63	50 (50)	50 (50)	50 (50)	50 (50)	50 (50)	50 (50)	65 (50)	65 (50)	115 (85)	115 (85)	115 (85)	115 (85)	55 (50)
ø80	50 (50)	50 (50)	50 (50)	50 (50)	50 (50)	50 (50)	60 (50)	60 (50)	120 (90)	120 (90)	120 (90)	120 (90)	55 (50)
ø100	50 (50)	50 (50)	50 (50)	50 (50)	50 (50)	50 (50)	60 (50)	60 (50)	130 (100)	130 (100)	130 (100)	130 (100)	60 (50)

*1: The values in ( ) are of T*V (L-shaped lead wire).
*2: When the stroke is 15 mm or less, the two switches could turn ON at the same time. In this case, adjust switch mounting positions to be as far apart as possible.

SCP*3
CMK2
CMA2
SCM
SCG
SCA2
SCS2
CKV2
CAV2/ COVP/N2
SSD2
SSG
SSD
CAT
MDC2
MVC
SMG
MSD/ MSDG
FC*
STK
SRL3
SRG3
SRM3
SRT3
MRL2
MRG2
SM-25
ShkAbs
FJ
FK
Spd Contr
Ending

Switch specifications (T-switch)

● 1-color/2-color LED/for AC magnetic field proof

Item	2-wire proximity				3-wire proximity				2-wire reed				2-wire proximity
	T1H/T1V	T2H/T2V/ T2JH/T2JV	T2YH/ T2YV	T2WH/ T2WV	T3H/ T3V	T3PH/ T3PV	T3YH/ T3YV	T3WH/ T3WV	T0H/T0V		T5H/T5V		T2YD (*4) T2YDT
Applications	For programmable controller, relay, compact solenoid valve	Programmable controller dedicated			For programmable controller, relay				For programmable controller, relay		For programmable controller, relay, IC circuit (without indicator lamp), serial connection		Programmable controller dedicated
Output method	-				NPN output	PNP output	NPN output	NPN output	-				
Power supply voltage	-				10 to 28 VDC				-				
Load voltage	85 to 265 VAC	10 to 30 VDC		24 VDC ±10%	30 VDC or less				12/24 VDC	110 VAC	5/12/24 VDC	110 VAC	24 VDC ±10%
Load current	5 to 100 mA	5 to 20 mA (*3)			100 mA or less		50 mA or less		5 to 50 mA	7 to 20 mA	50 mA or less	20 mA or less	5 to 20 mA
Indicator	LED (Lit when ON)	LED (Lit when ON)	Red/green LED (Lit when ON)	Red/green LED (Lit when ON)	LED (Lit when ON)	Yellow LED (Lit when ON)	Red/green LED (Lit when ON)	Red/green LED (Lit when ON)	LED (Lit when ON)		No indicator lamp		Red/green LED (Lit when ON)
Leakage current	1 mA or less with 100 VAC, 2 mA or less with 200 VAC	1 mA or less			10 μA or less				0 mA				1 mA or less
Weight g	1 m: 33 3 m: 87 5 m: 142	1 m: 18 3 m: 49 5 m: 80	1 m: 33 3 m: 87 5 m: 142	1 m: 18 3 m: 49 5 m: 80	1 m: 18 3 m: 49 5 m: 80		1 m: 33 3 m: 87 5 m: 142	1 m: 18 3 m: 49 5 m: 80	1 m: 18 3 m: 49 5 m: 80				1 m: 61 3 m: 166 5 m: 272

*1: Refer to Ending Page 1 for detailed switch specifications and dimensions.
*2: Switches other than the above models, such as switches with connectors, are also available. Refer to Ending Page 1.
*3: Max. load current: 20 mA at 25˚C. The current is lower than 20 mA if the operating ambient temperature around the switch is higher than 25˚C. (5 to 10 mA at 60°C)
*4: Switch for AC magnetic field (T2YD/T2YDT) cannot be used in DC magnetic field.

Cylinder weight

● SCA2-V

(Unit: kg)

Bore size (mm)	Product weight when stroke (S) = 0 mm						Switch weight	Mounting bracket weight	Additional weight per S = 100mm
	Basic (00)	Foot (LB)	Flange (FA, FB)	Eye bracket (CA)	Clevis bracket (CB)	Trunnion (TA, TB, TC)		T type	
ø40	1.27	1.45	1.69	1.59	1.63	1.66	Refer to the weight in the switch specifications.	0.030	0.39
ø50	1.64	1.89	2.14	2.02	2.05	2.18		0.027	0.46
ø63	2.39	2.76	3.48	2.96	3.01	3.24		0.027	0.50
ø80	4.17	4.91	6.03	5.44	5.65	5.51		0.040	0.90
ø100	5.77	6.67	8.51	7.40	7.59	8.33		0.035	1.12

● SCA2-V1,V2

(Unit: kg)

Bore size (mm)	Product weight when stroke (S) = 0 mm						Switch weight	Mounting bracket weight	Additional weight per S = 100mm
	Basic (00)	Foot (LB)	Flange (FA, FB)	Eye bracket (CA)	Clevis bracket (CB)	Trunnion (TA, TB, TC)		T type	
ø40	1.23	1.40	1.64	1.55	1.59	1.61	Refer to the weight in the switch specifications.	0.030	0.39
ø50	1.60	1.84	2.09	1.97	2.01	2.13		0.027	0.46
ø63	2.28	2.65	3.38	2.85	2.91	3.13		0.027	0.50
ø80	4.07	4.81	5.93	5.34	5.55	5.41		0.040	0.90
ø100	5.67	6.57	8.41	7.30	7.49	8.23		0.035	1.12

(Example) Product weight of SCA2-V1-LB-50B-200-TOH-D

- Product weight for 0 mm stroke..... 1.84 kg
- Additional weight for 200 mm stroke ..... 0.46 x $\frac{200}{100}$ = 0.92 kg
- Weight of 2 TOH switches ..... 0.018 x 2 = 0.036 kg
- Weight of 2 mounting brackets.....0.027 x 2 = 0.054 kg
- Product weight..... 1.45 + 0.92 + 0.036 + 0.054 = 2.460 kg

Theoretical thrust table

(Unit: N)

Bore size (mm)	Operating direction	Working pressure MPa						
		0.15	0.2	0.3	0.4	0.5	0.6	0.7
ø40	Push	1.88×10^2	2.51×10^2	3.77×10^2	5.03×10^2	6.28×10^2	7.54×10^2	8.80×10^2
	Pull	1.58×10^2	2.11×10^2	3.17×10^2	4.22×10^2	5.28×10^2	6.33×10^2	7.39×10^2
ø50	Push	2.95×10^2	3.93×10^2	5.89×10^2	7.85×10^2	9.82×10^2	1.18×10^3	1.37×10^3
	Pull	2.47×10^2	3.30×10^2	4.95×10^2	6.60×10^2	8.25×10^2	9.90×10^2	1.15×10^3
ø63	Push	4.68×10^2	6.23×10^2	9.35×10^2	1.25×10^3	1.56×10^3	1.87×10^3	2.18×10^3
	Pull	4.20×10^2	5.61×10^2	8.41×10^2	1.12×10^3	1.40×10^3	1.68×10^3	1.96×10^3
ø80	Push	7.54×10^2	1.01×10^3	1.51×10^3	2.01×10^3	2.51×10^3	3.02×10^3	3.52×10^3
	Pull	6.80×10^2	9.07×10^2	1.36×10^3	1.81×10^3	2.27×10^3	2.72×10^3	3.17×10^3
ø100	Push	1.18×10^3	1.57×10^3	2.36×10^3	3.14×10^3	3.93×10^3	4.71×10^3	5.50×10^3
	Pull	1.07×10^3	1.43×10^3	2.14×10^3	2.86×10^3	3.57×10^3	4.29×10^3	5.00×10^3

How to order

No switch (built-in magnet for switch)

SCA2 - V1 - LB - 40 ◯ B - 100 - 1 ———— S I

With switch (built-in magnet for switch)

SCA2 - V1 - LB - 40 ◯ B - 100 - 1 - T0H - R - S I

Ⓐ Actuation

Ⓑ Mounting *1

Ⓒ Bore size

Ⓓ Port thread

Ⓔ Cushion

Ⓕ Stroke

Ⓖ Valve voltage

Ⓗ Switch model No. *3

Ⓘ Switch quantity *4

Ⓙ Option *5 *6

Ⓚ Accessory *7

Code	Description
Ⓐ Actuation	
V1	Push when energized, single solenoid
V2	Pull when energized, single solenoid
V	Double solenoid
Ⓑ Mounting	
00	Basic
LB	Axial foot
FA	Rod side flange
FB	Head side flange
CA	Eye bracket
CB	Clevis bracket (pin and snap ring included)
TC	Intermediate trunnion
TA	Rod side trunnion
TF	Intermediate supporting hole trunnion (ø40 is not available)
TD	Rod side hole trunnion (ø40 is not available)
Ⓒ Bore size (mm)	
40	ø40
50	ø50
63	ø63
80	ø80
100	ø100
Ⓓ Port thread	
Blank	Rc thread
N	NPT thread (made-to-order product)
G	G thread (made-to-order product)
Ⓔ Cushion	
B	Both sides cushioned
R	Rod side cushioned
H	Head side cushioned
N	Without cushion

Ⓕ Stroke (mm)

Bore size	Stroke *2	Custom stroke
ø40	50 to 600	In 1 mm increments
ø50	50 to 600	
ø63	50 to 600	
ø80	50 to 700	
ø100	50 to 800	

Ⓖ Valve voltage	
1	100 VAC
2	200 VAC
3	24 VDC
Ⓗ Switch model No.	
Refer to the switch model numbers on the next page.	
*** Lead wire length**	
Blank	1 m (standard)
3	3 m (option)
5	5 m (option)
Ⓘ Switch quantity	
R	1 on rod side
H	1 on head side
D	2
T	3

Ⓙ Option

		Max. ambient temp.	instantaneous max. temp
J	Bellows	100°C	200°C
L	Bellows	250°C	400°C
M	Piston rod material (stainless steel)		
Blank	Cushion needle position R (standard)		
S	Cushion needle position S		
T	Cushion needle position T		

Ⓚ Accessory	
I	Rod eye
Y	Rod clevis (pin and snap ring included)
B1	Eye bracket
B2	Clevis bracket (pin and snap ring included)
B3	Eye bracket
B4	Trunnion No. 2 bracket (2 pcs./set)

⚠ Precautions for model No. selection

*1 : Mounting bracket will be shipped with the product. (Trunnion are assembled at shipment.)
*2 : Refer to page 597 for the min. stroke with switch.
*3 : Switches are shipped with the product.
*4 : When selecting TA, TD, TB or TE mounting, the switch quantity is limited to "H" (1 on head side) for TA and TD, and "R" (1 on rod side) for TB and TE.
*5 : The instantaneous max. temperature is the temperature when sparks, cutting chips, etc., instantaneously contact the bellows.
*6 : When selecting TA, TD, TB or TE mounting format, the cushion needle position is blank and fixed at S, with no options available.
*7 : "I" and "Y" cannot be selected together.
*8 : Refer to Ending Page 85 for custom specifications of rod end form.
*9 : Refer to page 448 for combination of variations/options.

[Example of model No.]

SCA2-V1-LB-40B-100-1-T0H-R-SI

Model: Medium bore size cylinder double acting/with valve

Ⓐ Actuation	: Push out when energized/single solenoid
Ⓑ Mounting	: Axial foot
Ⓒ Bore size	: ø40 mm
Ⓓ Port thread	: Rc thread
Ⓔ Cushion	: Both sides cushioned
Ⓕ Stroke	: 100 mm
Ⓖ Valve voltage	: 100 VAC
Ⓗ Switch model No.	: Reed T0H switch, lead wire length 1 m
Ⓘ Switch quantity	: 1 on rod side
Ⓙ Option	: Cushion needle position S
Ⓚ Accessory	: Rod eye

[H] Switch model No.

T-switch model No.

Axial lead wire	Radial lead wire	Contact	Voltage AC	Voltage DC	Indicator	Lead wire
T0H*	T0V*	Reed	●	●	1-color LED	2-wire
T5H*	T5V*	Reed	●	●	No indicator lamp	2-wire
T1H*	T1V*	Proximity	●		1-color LED	2-wire
T2H*	T2V*	Proximity		●	1-color LED	2-wire
T3H*	T3V*	Proximity		●	1-color LED	3-wire
T2WH*	T2WV*	Proximity		●	2-color LED	2-wire
T2YH*	T2YV*	Proximity		●	2-color LED	2-wire
T3WH*	T3WV*	Proximity		●	2-color LED	3-wire
T3YH*	T3YV*	Proximity		●	2-color LED	3-wire
T3PH*	T3PV*	Proximity		●	1-color LED	3-wire
T2YD*	-	Proximity		●	2-color LED AC magnetic field	2-wire
T2YDT*	-	Proximity		●	2-color LED AC magnetic field	2-wire
T2JH*	T2JV*	Proximity		●	1-color LED off-delay	2-wire

How to order switch

[T-switch]

For rod side

● Switch body + mounting bracket set

SCA2 - T0H - 40

Switch model No. (Item Ⓗ) — Bore size (Item Ⓒ on page 600)

● Switch body only

SW - T0H

Switch model No. (Item Ⓗ)

* Contact CKD when using an environment-friendly T-switch.

● Switch mounting bracket set

SCA2 - TS - 40

Mounting bracket — Bore size (Item Ⓒ on page 600)

For head side

● Switch body + mounting bracket set

SCA2 - V - T0H - 40

Switch model No. (Item Ⓗ) — Bore size (Item Ⓒ on page 600)

● Switch body only

SW - T0H

Switch model No. (Item Ⓗ)

* Contact CKD when using an environment-friendly T type switch.

● Switch mounting bracket set

SCA2 - V - TS - 40

Mounting bracket — Bore size (Item Ⓒ on page 600)

[T2YD switch]

● Switch body + mounting bracket set

SCA2 - T2YD - 40

Switch model No. (Item Ⓗ) — Bore size (Item Ⓒ on page 600)

● Switch body only

SW - T2YD

Switch model No. (Item Ⓗ)

● Mounting bracket set

SCA2 - T - 40

Bore size (Item Ⓒ on page 600)

How to order mounting bracket

Bore size (mm) / Mounting bracket	ø40	ø50	ø63	ø80	ø100
Foot (LB) *2	S1-LB-40	S1-LB-50	S1-LB-63	S1-LB-80	S1-LB-100
Flange (FA/FB)	S1-FA-40	S1-FA-50	S1-FA-63	S1-FA-80	S1-FA-100
Eye bracket (CA)	S1-CA-40	S1-CA-50	S1-CA-63	S1-CA-80	S1-CA-100
Clevis bracket (CB)	S1-CB-40	S1-CB-50	S1-CB-63	S1-CB-80	S1-CB-100

*1 : For material of the mounting bracket, refer to page 456.
*2 : The foot mounting bracket is provided as 2 pcs./set.
*3 : All mounting brackets are supplied with mounting bolts.

Changing to push when energized or pull when energized

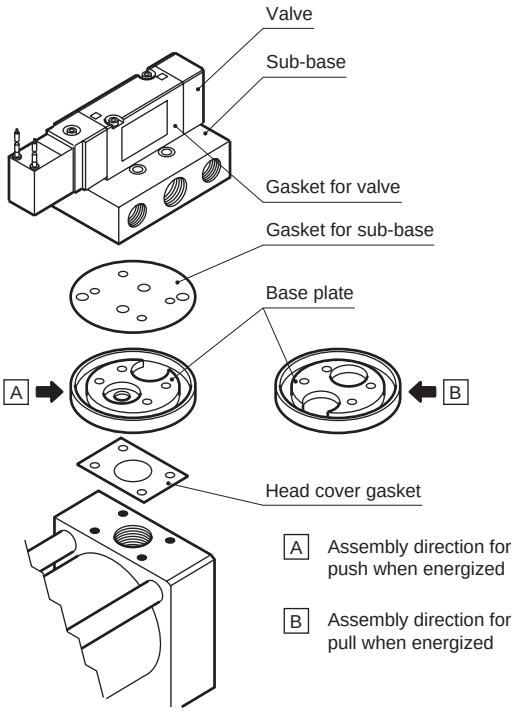

Internal structure

Same as SCA2 Series (double acting/single rod). Refer to page 456.

MEMO

SCP*3
CMK2
CMA2
SCM
SCG
SCA2
SCS2
CKV2
CAV2/ COVP/N2
SSD2
SSG
SSD
CAT
MDC2
MVC
SMG
MSD/ MSDG
FC*
STK
SRL3
SRG3
SRM3
SRT3
MRL2
MRG2
SM-25
ShkAbs
FJ
FK
Spd Contr
Ending

Dimensions

● Basic (00)

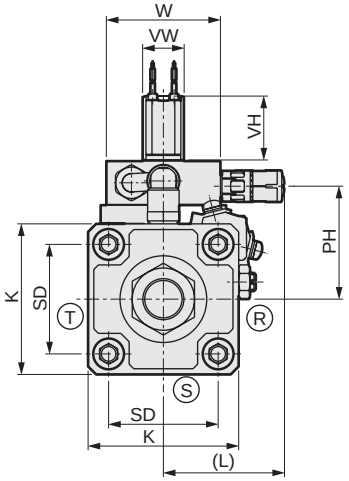

ø40 to ø63

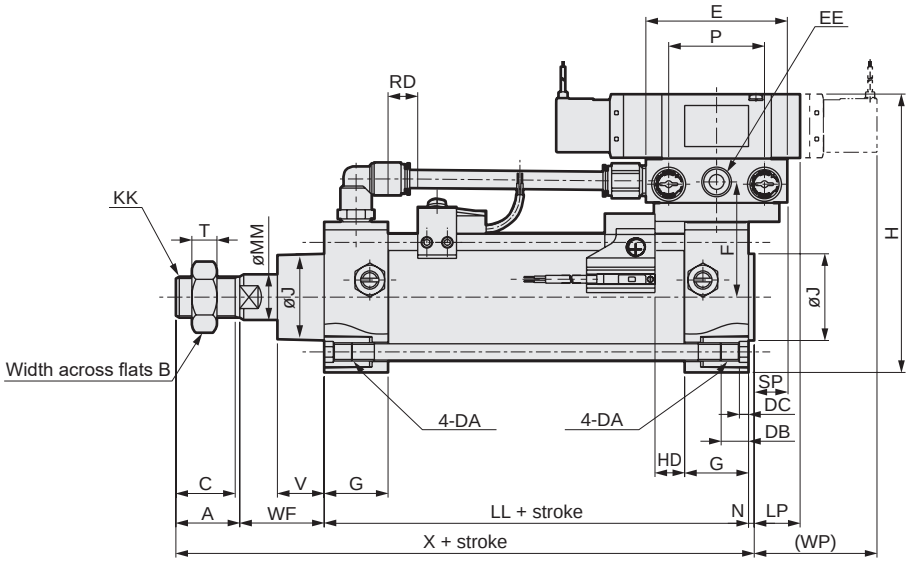

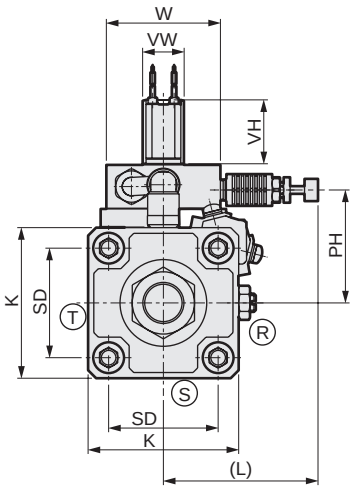

ø80,ø100

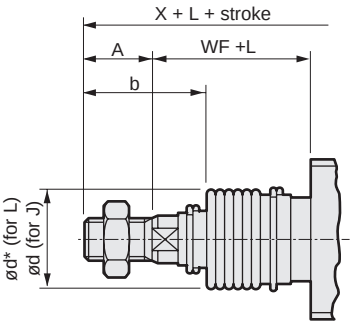

[With bellows]

Code	Basic (00) Basic dimensions																													
Bore size	A	B	C	E	EE	F	DA	DB	DC	G	H	J	K	KK	L	LL	LP	MM	N	P	PH	SD	SP	T	V	VH	VW	W	WF	WP	X
ø40	22	22	20	62	Rc 1/4	46	M8	12	4	26	113	31	57	M14x1.5	60	93	22	16	2	42	45	40.5	16	8	18.5	28	18	50	33.5	55	150.5
ø50	28	27	26	62	Rc 1/4	50.5	M8	12	4	28	122	38	66	M18x1.5	60	101	20.5	20	2.5	42	49.5	48	14.5	11	20.5	28	18	50	37	54	168.5
ø63	28	27	26	76	Rc 3/8	60	M8	12	4	30	149	38	80	M18x1.5	64	105	20	20	3	51	60.5	59	20	11	21	36	23	60	35	62	171
ø80	36	32	34	94	Rc 1/2	78.5	M12	16	5	34	188	43	98	M22x1.5	122	116	26.5	25	3.5	64	78.5	74	26.5	13	23.5	43	29	90	48	72.5	203.5
ø100	45	41	43	94	Rc 1/2	88.5	M12	16	5	36	208	51	118	M26x1.5	122	128	25	30	4	64	88.5	90	25	16	32	43	29	90	53	71	230

Code	With switch						With bellows										
Bore size	T0,T5 T2,T3		T1,T2Y T3Y,T2J		T2W, T3W		b	d	d*	*L*							
	RD	HD	RD	HD	RD	HD				50 or less	Over 50 to 100	Over 100 to 150	Over 150 to 200	Over 200 to 300	Over 300 to 400	Over 400 to 500	*1 Over 500
ø40	11	11	10	10	13	13	41	40	40	25.5	41.5	58.5	75.5	108.5	141.5	174.5	(Stroke/3.0) + 8
ø50	13	13	12	12	15	15	47	47	48	22	36	49	63	90	119	146	(Stroke/3.6) + 7.5
ø63	13	13	12	12	15	15	45	47	48	22	36	49	63	90	119	146	(Stroke/3.6) + 7.5
ø80	14.5	14.5	13.5	13.5	16.5	16.5	58.5	53	55	14	26	38	49	72	96	119	(Stroke/4.3) + 2.5
ø100	18.5	18.5	17.5	17.5	20.5	20.5	69.5	61	65	20	32	42	53	76	98	120	(Stroke/4.5) + 9

*1 : For the L dimension, round up below the decimal point.
*2 : Refer to page 615 for dimensions of projecting section of T2YD switch.
*3 : For the dimensions of the accessories, refer to pages 470 and 471.

Dimensions

● Axial foot (LB)

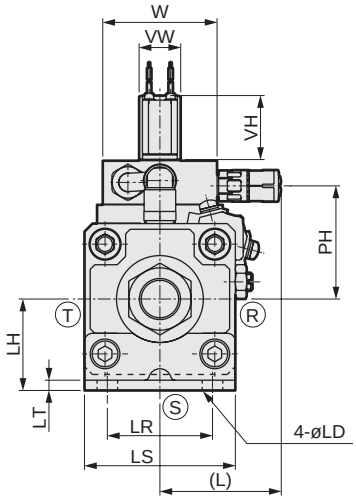

ø40 to ø63

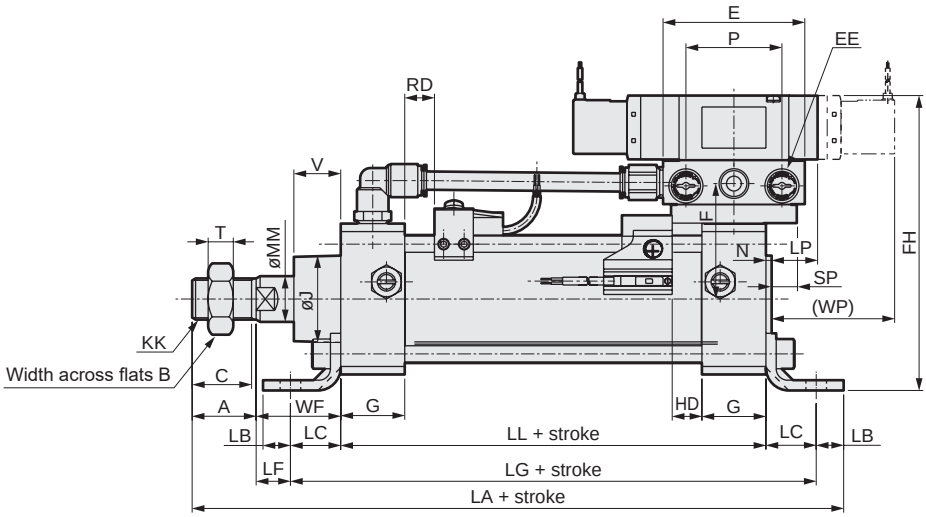

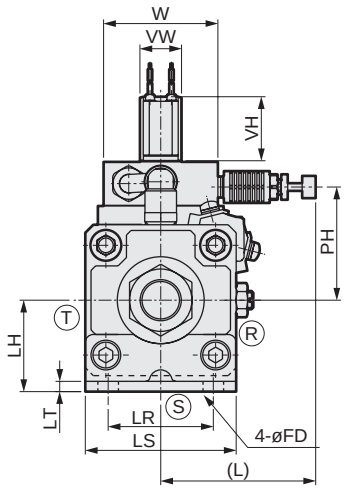

ø80, ø100

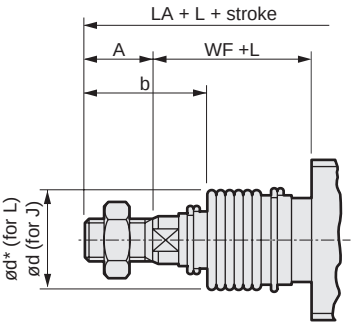

[With bellows]

Code	Axial foot (LB) Basic dimensions																								Mounting method									
Bore size	A	B	C	E	EE	F	FH	G	KK	L	LL	LP	MM	N	P	PH	SP	T	V	VH	VW	W	WF	WP	LA	LB	LC	LD	LF	LG	LH	LR	LS	LT
ø40	22	22	20	62	Rc 1/4	46	124.5	26	M14x1.5	60	93	22	16	2	42	45	16	8	18.5	28	18	50	33.5	55	178	10	19.5	9	14	132	40	40	57	3.2
ø50	28	27	26	62	Rc 1/4	50.5	129	28	M18x1.5	60	101	20.5	20	2.5	42	49.5	14.5	11	20.5	28	18	50	37	54	200	12	22	9	15	145	40	46	66	4.5
ø63	28	27	26	76	Rc 3/8	60	159	30	M18x1.5	64	105	20	20	3	51	60.5	20	11	21	36	23	60	35	62	210	12	30	11	5	165	50	60	80	4.5
ø80	36	32	34	94	Rc 1/2	78.5	199	34	M22x1.5	122	116	26.5	25	3.5	64	78.5	26.5	13	23.5	43	29	90	48	72.5	251	14	37	14	11	190	60	74	98	6.0
ø100	45	41	43	94	Rc 1/2	88.5	216	36	M26x1.5	122	128	25	30	4	64	88.5	25	16	32	43	29	90	53	71	278	21	31	14	22	190	67	80	118	6.0

Code	With switch						With bellows											
Bore size	T0,T5 T2,T3		T1,T2Y T3Y,T2J		T2W,T3W		b	d	d*	*L*								
	RD	HD	RD	HD	RD	HD				50 or less	Over 50 to 100	Over 100 to 150	Over 150 to 200	Over 200 to 300	Over 300 to 400	Over 400 to 500	*1 Over 500
ø40	11	11	10	10	13	13	41	40	40	25.5	41.5	58.5	75.5	108.5	141.5	174.5	(Stroke/3.0) + 8
ø50	13	13	12	12	15	15	47	47	48	22	36	49	63	90	119	146	(Stroke/3.6) + 7.5
ø63	13	13	12	12	15	15	45	47	48	22	36	49	63	90	119	146	(Stroke/3.6) + 7.5
ø80	14.5	14.5	13.5	13.5	16.5	16.5	58.5	53	55	14	26	38	49	72	96	119	(Stroke/4.3) + 2.5
ø100	18.5	18.5	17.5	17.5	20.5	20.5	69.5	61	65	20	32	42	53	76	98	120	(Stroke/4.5) + 9

*1 : For the L dimension, round up below the decimal point.
*2 : Refer to page 615 for dimensions of projecting section of T2YD switch.
*3 : For the dimensions of the accessories, refer to pages 470 and 471.

SCP*3
CMK2
CMA2
SCM
SCG
SCA2
SCS2
CKV2
CAV2/ COVP/N2
SSD2
SSG
SSD
CAT
MDC2
MVC
SMG
MSD/ MSDG
FC*
STK
SRL3
SRG3
SRM3
SRT3
MRL2
MRG2
SM-25
ShkAbs
FJ
FK
Spd Contr
Ending

Dimensions

● Rod side flange (FA)

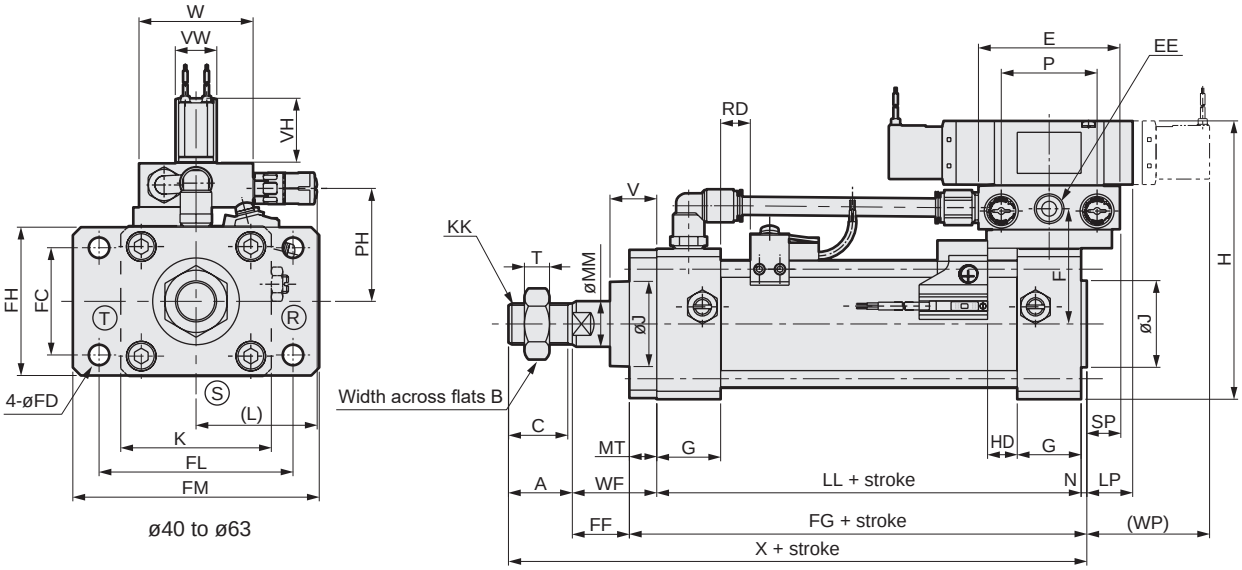

ø40 to ø63

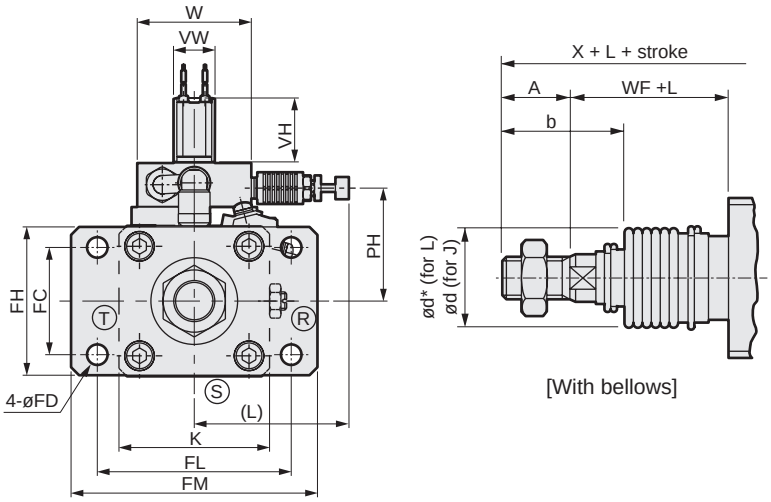

[With bellows]

ø80,ø100

Code / Bore size	Rod side flange (FA) Basic dimensions																											Mounting method						
	A	B	C	E	EE	F	G	H	J	K	KK	L	LL	LP	MM	MT	N	P	PH	SP	T	V	VH	VW	W	WF	WP	X	FC	FD	FF	FG	FH	FL	FM
ø40	22	22	20	62	Rc 1/4	46	26	113	31	57	M14x1.5	60	93	22	16	12	2	42	45	16	8	18.5	28	18	50	33.5	55	150.5	40	9	21.5	107	57	80	100
ø50	28	27	26	62	Rc 1/4	50.5	28	122	38	66	M18x1.5	60	101	20.5	20	12	2.5	42	49.5	14.5	11	20.5	28	18	50	37	54	168.5	47	9	25	115.5	65	85	108
ø63	28	27	26	76	Rc 3/8	60	30	149	38	80	M18x1.5	64	105	20	20	16	3	51	60.5	20	11	21	36	23	60	35	62	171	60	11	19	124	80	106	130
ø80	36	32	34	94	Rc 1/2	78.5	34	188	43	98	M22x1.5	122	116	26.5	25	19	3.5	64	78.5	26.5	13	23.5	43	29	90	48	72.5	203.5	74	14	29	138.5	98	125	153
ø100	45	41	43	94	Rc 1/2	88.5	36	208	51	118	M26x1.5	122	128	25	30	19	4	64	88.5	25	16	32	43	29	90	53	71	230	88	14	34	151	118	144	180

Code / Bore size	With switch						With bellows									
	T0, T5 T2, T3		T1, T2Y T3Y, T2J		T2W, T3W		b	d	d*	L						
	RD	HD	RD	HD	RD	HD				50 or less	Over 50 to 100	Over 100 to 150	Over 150 to 200	Over 200 to 300	Over 300 to 400	Over 400 to 500	*1 Over 500
ø40	11	11	10	10	13	13	41	40	40	25.5	41.5	58.5	75.5	108.5	141.5	174.5	(Stroke/3.0) + 8
ø50	13	13	12	12	15	15	47	47	48	22	36	49	63	90	119	146	(Stroke/3.6) + 7.5
ø63	13	13	12	12	15	15	45	47	48	22	36	49	63	90	119	146	(Stroke/3.6) + 7.5
ø80	14.5	14.5	13.5	13.5	16.5	16.5	58.5	53	55	14	26	38	49	72	96	119	(Stroke/4.3) + 2.5
ø100	18.5	18.5	17.5	17.5	20.5	20.5	69.5	61	65	20	32	42	53	76	98	120	(Stroke/4.5) + 9

*1 : For the L dimension, round up below the decimal point.
*2 : Refer to page 615 for dimensions of projecting section of T2YD switch.
*3 : For the dimensions of the accessories, refer to pages 470 and 471.

Dimensions

● Head side flange FB

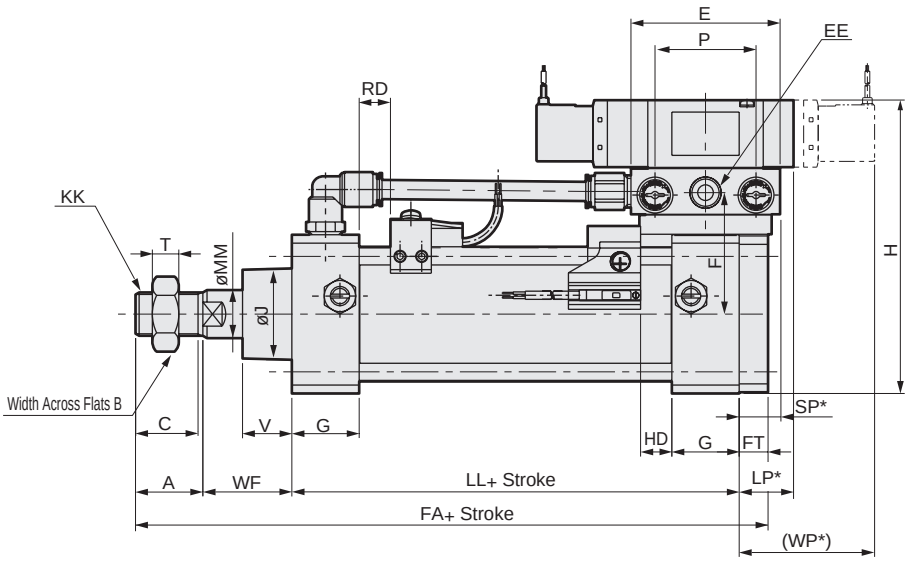

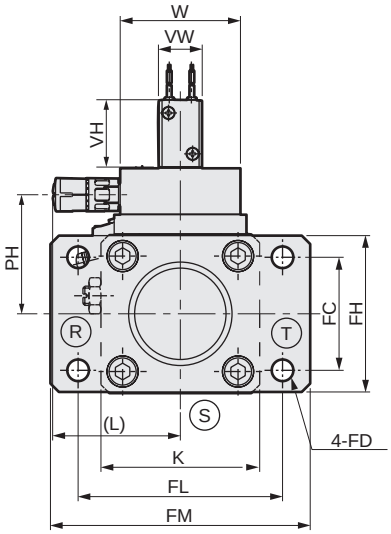

ø40 to ø63

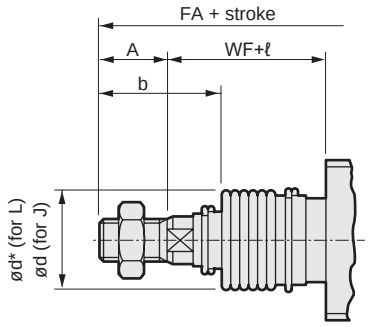

[With bellows]

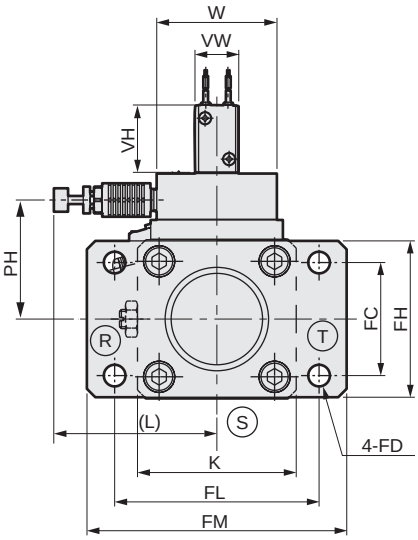

ø80, ø100

Code	Head side flange(FB)Basic dimensions																						Mounting method							
Bore size	A	B	C	E	EE	F	G	H	K	KK	L	LL	LP*	MM	P	PH	SP*	T	V	VH	VW	W	WP*	FA	FC	FD	FH	FJ	FL	FM	FT
ø40	22	22	20	62	Rc 1/4	46	26	113	57	M 14 x 1.5	60	93	24	16	42	45	18	8	18.5	28	18	50	57	160.5	40	9	57	131	80	100	12
ø50	28	27	26	62	Rc 1/4	50.5	28	122	66	M 18 x 1.5	60	101	23	20	42	49.5	17	11	20.5	28	18	50	56.5	178	47	9	65	142.5	85	108	12
ø63	28	27	26	76	Rc 3/8	60	30	149	80	M 18 x 1.5	64	105	23	20	51	60.5	23	11	21	36	23	60	65	184	60	11	80	144.5	106	130	16
ø80	36	32	34	94	Rc 1/2	78.5	34	188	98	M 22 x 1.5	122	116	28.5	25	64	78.5	30	13	23.5	43	29	90	76	219	74	14	98	170	125	153	19
ø100	45	41	43	94	Rc 1/2	88.5	36	208	118	M 26 x 1.5	122	128	34	30	64	88.5	29	16	32	43	29	90	75	245	88	14	118	187	144	180	19

Code	With switch						With bellows										
Bore size	T0, T5 T2, T3		T1, T2Y T3Y, T2J		T2W, T3W		b	d	d*	*L*							
	RD	HD	RD	HD	RD	HD				50 or less	Over 50 to 100	Over 100 to 150	Over 150 to 200	Over 200 to 300	Over 300 to 400	Over 400 to 500	Over 500
ø40	11	11	10	10	13	13	41	40	40	25.5	41.5	58.5	75.5	108.5	141.5	174.5	(Stroke/3.0) + 8
ø50	13	13	12	12	15	15	47	47	48	22	36	49	63	90	119	146	(Stroke/3.6) + 7.5
ø63	13	13	12	12	15	15	45	47	48	22	36	49	63	90	119	146	(Stroke/3.6) + 7.5
ø80	14.5	14.5	13.5	13.5	16.5	16.5	58.5	53	55	14	26	38	49	72	96	119	(Stroke/4.3) + 2.5
ø100	18.5	18.5	17.5	17.5	20.5	20.5	69.5	61	65	20	32	42	53	76	98	120	(Stroke/4.5) + 9

*1 : For the L dimension, round up below the decimal point.
*2 : Refer to page 615 for dimensions of projecting section of T2YD switch.
*3 : For the dimensions of the accessories, refer to pages 470 and 471.

SCP*3
CMK2
CMA2
SCM
SCG
SCA2
SCS2
CKV2
CAV2/ COVP/N2
SSD2
SSG
SSD
CAT
MDC2
MVC
SMG
MSD/ MSDG
FC*
STK
SRL3
SRG3
SRM3
SRT3
MRL2
MRG2
SM-25
ShkAbs
FJ
FK
Spd Contr
Ending

Dimensions

● Eye bracket (CA)

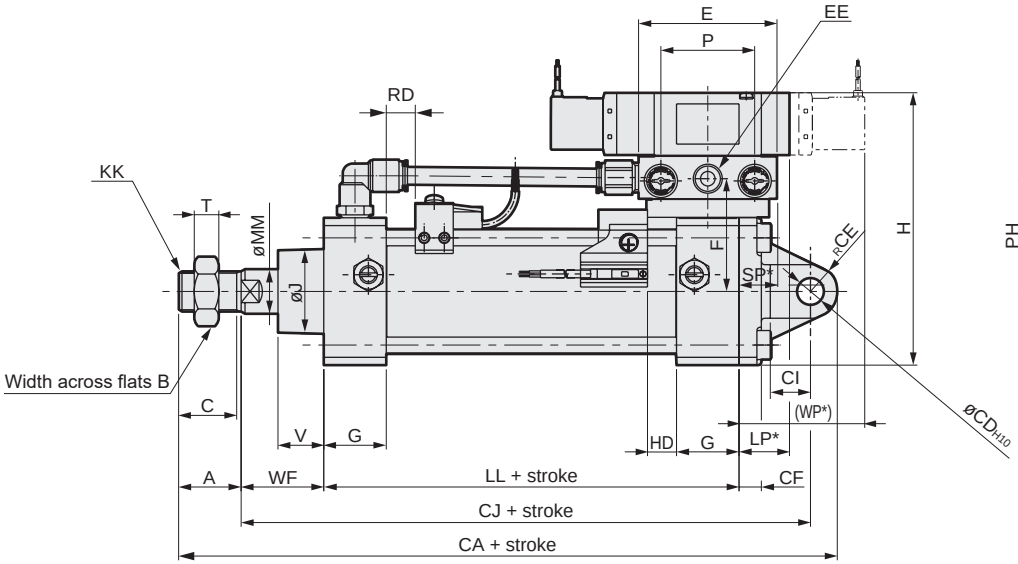

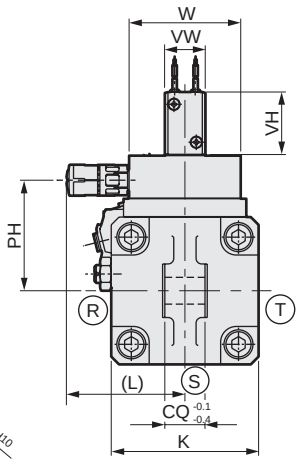

ø40 to ø63

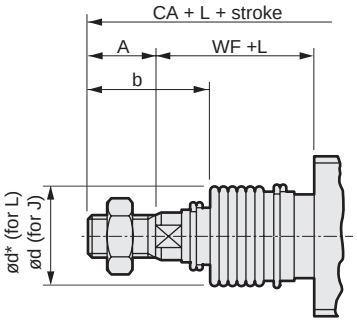

[With bellows]

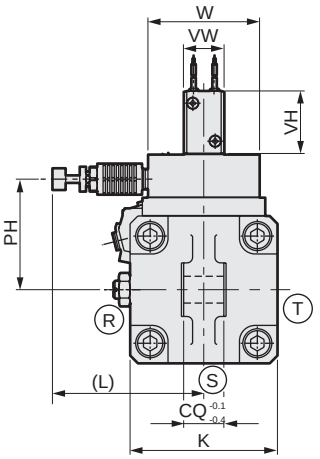

ø80,ø100

Code	Eye bracket (CA) Basic dimensions																								Mounting method						
Bore size	A	B	C	E	EE	F	G	H	J	K	KK	L	LL	LP*	MM	P	PH	SP*	T	V	VH	VW	W	WF	WP*	CA	CD	CE	CF	CI	CJ	CQ
ø40	22	22	20	62	Rc 1/4	46	26	113	31	57	M14x1.5	60	93	24	16	42	45	18	8	18.5	28	18	50	33.5	57	192.5	12	12	10	18	158.5	18
ø50	28	27	26	62	Rc 1/4	50.5	28	122	38	66	M18x1.5	60	101	23	20	42	49.5	17	11	20.5	28	18	50	37	56.5	210	12	12	10	18	170	18
ø63	28	27	26	76	Rc 3/8	60	30	149	38	80	M18x1.5	64	105	23	20	51	60.5	23	11	21	36	23	60	35	65	221	14	16	10	24	177	20
ø80	36	32	34	94	Rc 1/2	78.5	34	188	43	98	M22x1.5	122	116	28.5	25	64	78.5	30	13	23.5	43	29	90	48	76	272	20	20	14	30	216	28
ø100	45	41	43	94	Rc 1/2	88.5	36	208	51	118	M26x1.5	122	128	34	30	64	88.5	29	16	32	43	29	90	53	75	298	20	20	16	30	233	28

Code	With switch						With bellows										
Bore size	T0, T5 T2, T3		T1, T2Y T3Y, T2J		T2W, T3W		b	d	d*	L							
	RD	HD	RD	HD	RD	HD				50 or less	Over 50 to 100	Over 100 to 150	Over 150 to 200	Over 200 to 300	Over 300 to 400	Over 400 to 500	*1 Over 500
ø40	11	11	10	10	13	13	41	40	40	25.5	41.5	58.5	75.5	108.5	141.5	174.5	(Stroke/3.0) + 8
ø50	13	13	12	12	15	15	47	47	48	22	36	49	63	90	119	146	(Stroke/3.6) + 7.5
ø63	13	13	12	12	15	15	45	47	48	22	36	49	63	90	119	146	(Stroke/3.6) + 7.5
ø80	14.5	14.5	13.5	13.5	16.5	16.5	58.5	53	55	14	26	38	49	72	96	119	(Stroke/4.3) + 2.5
ø100	18.5	18.5	17.5	17.5	20.5	20.5	69.5	61	65	20	32	42	53	76	98	120	(Stroke/4.5) + 9

*1 : For the L dimension, round up below the decimal point.
*2 : Refer to page 615 for dimensions of projecting section of T2YD switch.
*3 : For the dimensions of the accessories, refer to pages 470 and 471.

Dimensions

● Clevis bracket (CB)

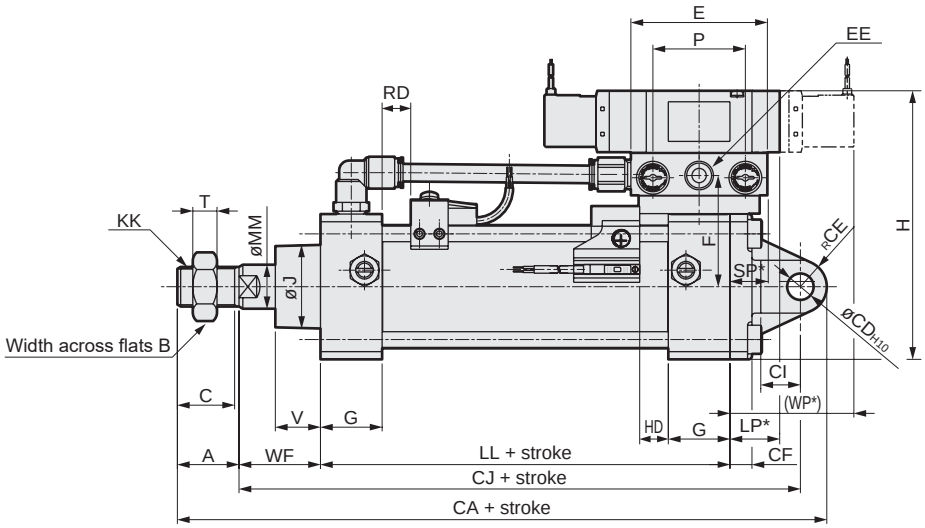

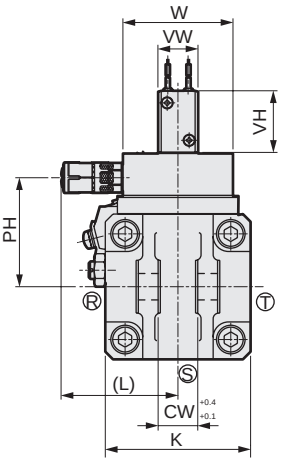

ø40 to ø63

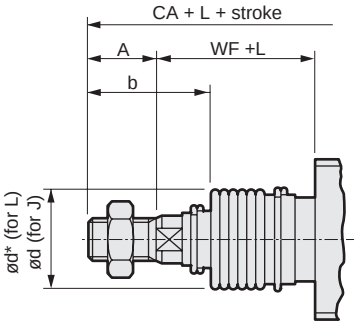

[With bellows]

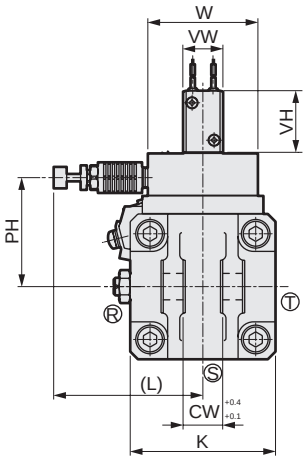

ø80, ø100

Code	Clevis bracket (CB) Basic dimensions																								Mounting method						
Bore size	A	B	C	E	EE	F	G	H	J	K	KK	L	LL	LP*	MM	P	PH	SP*	T	V	VH	VW	W	WF	WP*	CA	CD	CE	CF	CI	CJ	CW
ø40	22	22	20	62	Rc 1/4	46	26	113	31	57	M14x1.5	60	93	24	16	42	45	18	8	18.5	28	18	50	33.5	57	192.5	12	12	10	18	158.5	18
ø50	28	27	26	62	Rc 1/4	50.5	28	122	38	66	M18x1.5	60	101	23	20	42	49.5	17	11	20.5	28	18	50	37	56.5	210	12	12	10	18	170	18
ø63	28	27	26	76	Rc 3/8	60	30	149	38	80	M18x1.5	64	105	23	20	51	60.5	23	11	21	36	23	60	35	65	221	14	16	10	24	177	20
ø80	36	32	34	94	Rc 1/2	78.5	34	188	43	98	M22x1.5	122	116	28.5	25	64	78.5	30	13	23.5	43	29	90	48	76	272	20	20	14	30	216	28
ø100	45	41	43	94	Rc 1/2	88.5	36	208	51	118	M26x1.5	122	128	34	30	64	88.5	29	16	32	43	29	90	53	75	298	20	20	16	30	233	28

Code	With switch						With bellows										
Bore size	T0, T5 T2, T3		T1, T2Y T3Y, T2J		T2W, T3W		b	d	d*	L							
	RD	HD	RD	HD	RD	HD				50 or less	Over 50 to 100	Over 100 to 150	Over 150 to 200	Over 200 to 300	Over 300 to 400	Over 400 to 500	*1 Over 500
ø40	11	11	10	10	13	13	41	40	40	25.5	41.5	58.5	75.5	108.5	141.5	174.5	(Stroke/3.0) + 8
ø50	13	13	12	12	15	15	47	47	48	22	36	49	63	90	119	146	(Stroke/3.6) + 7.5
ø63	13	13	12	12	15	15	45	47	48	22	36	49	63	90	119	146	(Stroke/3.6) + 7.5
ø80	14.5	14.5	13.5	13.5	16.5	16.5	58.5	53	55	14	26	38	49	72	96	119	(Stroke/4.3) + 2.5
ø100	18.5	18.5	17.5	17.5	20.5	20.5	69.5	61	65	20	32	42	53	76	98	120	(Stroke/4.5) + 9

*1 : For the L dimension, round up below the decimal point.
*2 : Refer to page 615 for dimensions of projecting section of T2YD switch.
*3 : For the dimensions of the accessories, refer to pages 470 and 471.

SCP*3
CMK2
CMA2
SCM
SCG
SCA2
SCS2
CKV2
CAV2/ COVP/N2
SSD2
SSG
SSD
CAT
MDC2
MVC
SMG
MSD/ MSDG
FC*
STK
SRL3
SRG3
SRM3
SRT3
MRL2
MRG2
SM-25
ShkAbs
FJ
FK
Spd Contr
Ending

Dimensions

● Intermediate trunnion (TC)

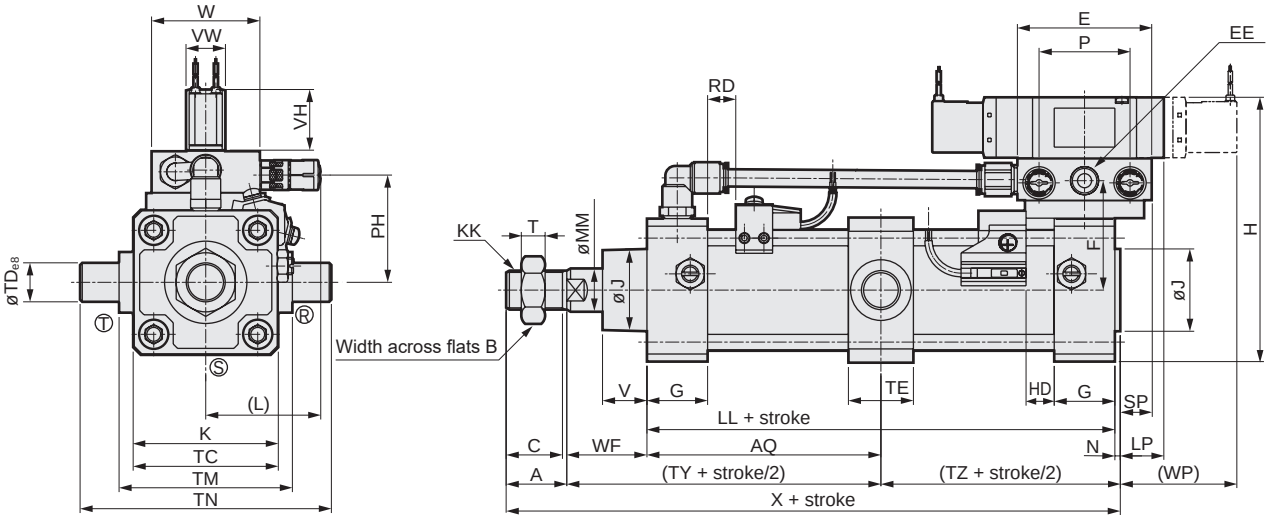

ø40 to ø63

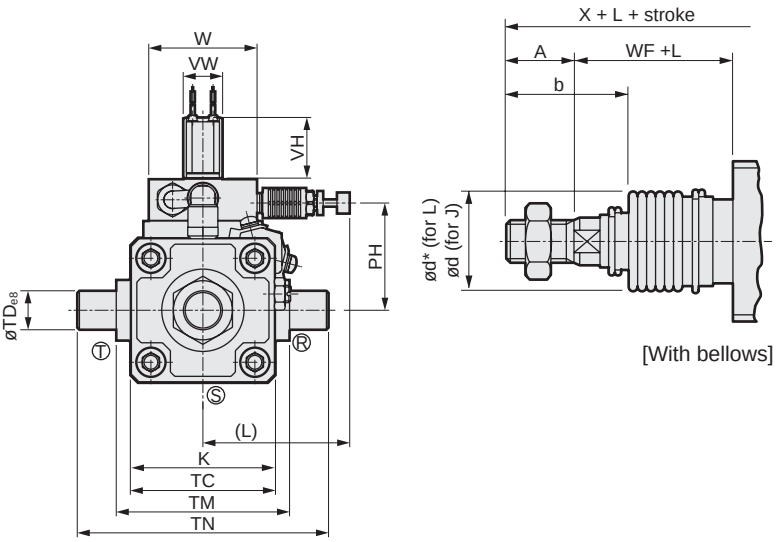

[With bellows]

ø80, ø100

Code	Intermediate trunnion (TC) Basic dimensions																											Mounting method			
Bore size	A	B	C	E	EE	F	G	H	J	K	KK	L	LL	LP	MM	N	P	PH	SP	T	V	VH	VW	W	WF	WP	X	AQ	TC	TD	TE
ø40	22	22	20	62	Rc 1/4	46	26	113	31	57	M14x1.5	60	93	22	16	2	42	45	16	8	18.5	28	18	50	33.5	55	150.5	46.5+Stroke/2	57	16	30
ø50	28	27	26	62	Rc 1/4	50.5	28	122	38	66	M18x1.5	60	101	20.5	20	2.5	42	49.5	14.5	11	20.5	28	18	50	37	54	168.5	50.5+Stroke/2	67	18	30
ø63	28	27	26	76	Rc 3/8	60	30	149	38	80	M18x1.5	64	105	20	20	3	51	60.5	20	11	21	36	23	60	35	62	171	52.5+Stroke/2	82	20	35
ø80	36	32	34	94	Rc 1/2	78.5	34	188	43	98	M22x1.5	122	116	26.5	25	3.5	64	78.5	26.5	13	23.5	43	29	90	48	72.5	203.5	58+Stroke/2	100	25	40
ø100	45	41	43	94	Rc 1/2	88.5	36	208	51	118	M26x1.5	122	128	25	30	4	64	88.5	25	16	32	43	29	90	53	71	230	64+Stroke/2	121	35	50

Code					With switch						With bellows										
Bore size	TM	TN	TY	TZ	T0, T5 T2, T3		T1, T2Y T3Y, T2J		T2W, T3W		b	d	d*	L							
					RD	HD	RD	HD	RD	HD				50 or less	Over 50 to 100	Over 100 to 150	Over 150 to 200	Over 200 to 300	Over 300 to 400	Over 400 to 500	*1 Over 500
ø40	63	95	80	48.5	11	11	10	10	13	13	41	40	40	25.5	41.5	58.5	75.5	108.5	141.5	174.5	(Stroke/3.0) + 8
ø50	80	116	87.5	53	13	13	12	12	15	15	47	47	48	22	36	49	63	90	119	146	(Stroke/3.6) + 7.5
ø63	90	130	87.5	55.5	13	13	12	12	15	15	45	47	48	22	36	49	63	90	119	146	(Stroke/3.6) + 7.5
ø80	115	165	106	61.5	14.5	14.5	13.5	13.5	16.5	16.5	58.5	53	55	14	26	38	49	72	96	119	(Stroke/4.3) + 2.5
ø100	135	205	117	68	18.5	18.5	17.5	17.5	20.5	20.5	69.5	61	65	20	32	42	53	76	98	120	(Stroke/4.5) + 9

*1 : For the L dimension, round up below the decimal point.
*2 : Refer to page 615 for dimensions of projecting section of T2YD switch.
*3 : For the dimensions of the accessories, refer to pages 470 and 471.

Dimensions

● Rod side trunnion (TA)

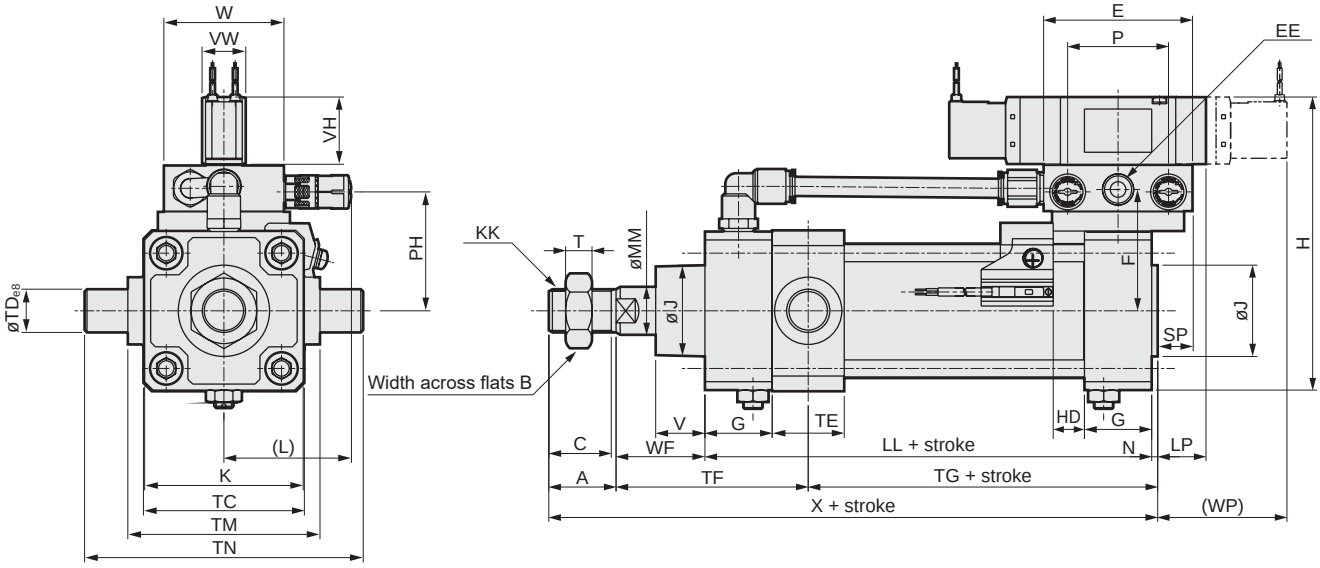

ø40 to ø63

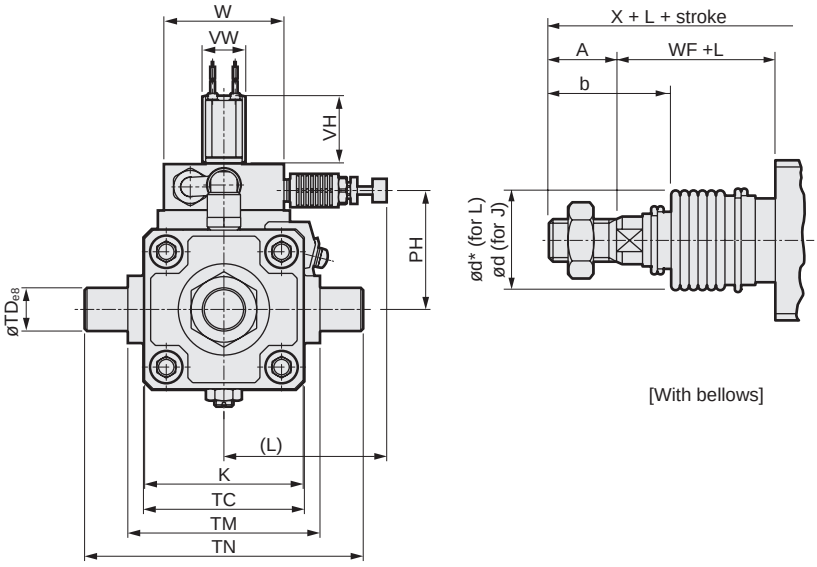

[With bellows]

ø80, ø100

Code	Rod side trunnion (TA) Basic dimensions																											Mounting method				
Bore size	A	B	C	E	EE	F	G	H	J	K	KK	L	LL	LP	MM	N	P	PH	SP	T	V	VH	VW	W	WF	WP	X	TC	TD	TE	TF	TG
ø40	22	22	20	62	Rc 1/4	46	26	113	31	57	M14x1.5	60	93	22	16	2	42	45	16	8	18.5	28	18	50	33.5	55	150.5	57	16	30	74.5	54
ø50	28	27	26	62	Rc 1/4	50.5	28	122	38	66	M18x1.5	60	101	20.5	20	2.5	42	49.5	14.5	11	20.5	28	18	50	37	54	168.5	67	18	30	80	60.5
ø63	28	27	26	76	Rc 3/8	60	30	149	38	80	M18x1.5	64	105	20	20	3	51	60.5	20	11	21	36	23	60	35	62	171	82	20	35	82.5	60.5
ø80	36	32	34	94	Rc 1/2	78.5	34	188	43	98	M22x1.5	122	116	26.5	25	3.5	64	78.5	26.5	13	23.5	43	29	90	48	72.5	203.5	100	25	40	102	65.5
ø100	45	41	43	94	Rc 1/2	88.5	36	208	51	118	M26x1.5	122	128	25	30	4	64	88.5	25	16	32	43	29	90	53	71	230	121	35	50	114	71

Code			With switch			With bellows									
Bore size	TM	TN	T0,T5 T2, T3 HD	T1, T2Y T3Y, T2J HD	T2W, T3W HD	b	d	d*	*L* 50 or less	Over 50 to 100	Over 100 to 150	Over 150 to 200	Over 200 to 300	Over 300 to 400	Over 400 to 500	*1 Over 500
ø40	63	95	11	10	13	41	40	40	25.5	41.5	58.5	75.5	108.5	141.5	174.5	(Stroke/3.0) + 8
ø50	80	116	13	12	15	47	47	48	22	36	49	63	90	119	146	(Stroke/3.6) + 7.5
ø63	90	130	13	12	15	45	47	48	22	36	49	63	90	119	146	(Stroke/3.6) + 7.5
ø80	115	165	14.5	13.5	16.5	58.5	53	55	14	26	38	49	72	96	119	(Stroke/4.3) + 2.5
ø100	135	205	18.5	17.5	20.5	69.5	61	65	20	32	42	53	76	98	120	(Stroke/4.5) + 9

*1 : For the L dimension, round up below the decimal point.
*2 : Refer to page 615 for dimensions of projecting section of T2YD switch.
*3 : For the dimensions of the accessories, refer to pages 470 and 471.

SCP*3
CMK2
CMA2
SCM
SCG
SCA2
SCS2
CKV2
CAV2/ COVP/N2
SSD2
SSG
SSD
CAT
MDC2
MVC
SMG
MSD/ MSDG
FC*
STK
SRL3
SRG3
SRM3
SRT3
MRL2
MRG2
SM-25
ShkAbs
FJ
FK
Spd Contr
Ending

Dimensions

● Intermediate supporting hole trunnion (TF)

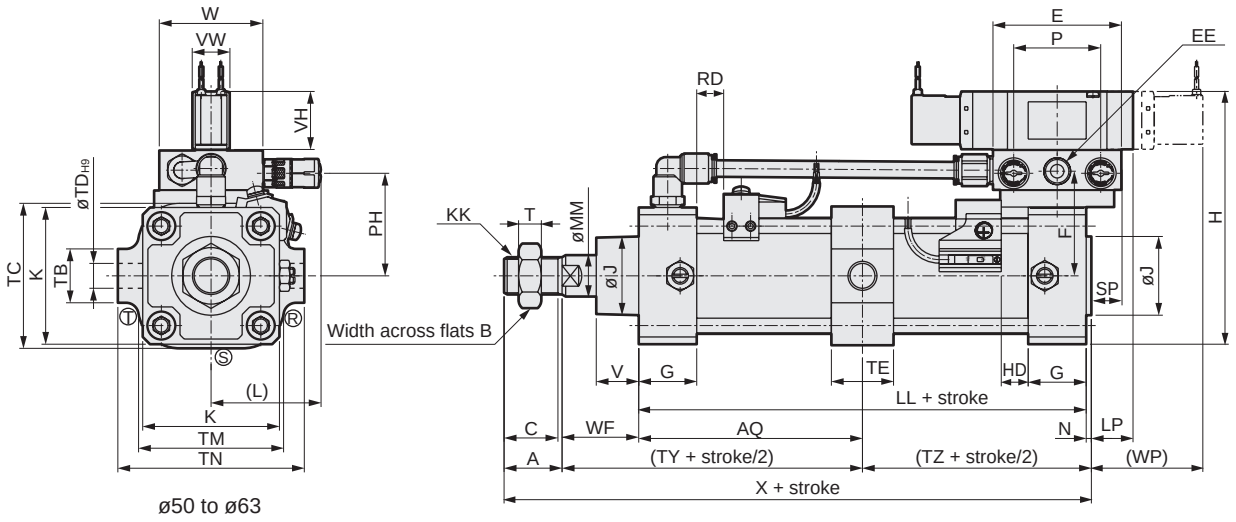

ø50 to ø63

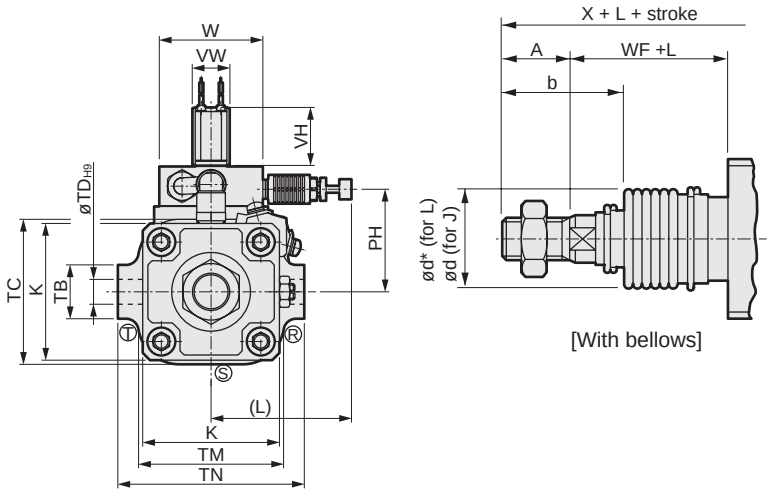

[With bellows]

ø80,ø100

Code	Intermediate hole style trunnion (TF) Basic dimensions																									Mounting method						
Bore size	A	B	C	E	EE	F	H	J	K	KK	L	LL	LP	MM	N	P	PH	SP	T	VH	VW	W	WF	WP	X	AQ	TB	TC	TD	TE	TM	TN
ø50	28	27	26	62	Rc 1/4	50.5	122	38	66	M18x1.5	60	101	20.5	20	2.5	42	49.5	14.5	11	28	18	50	37	54	168.5	50.5+ Stroke/2	26	67	12	30	70	90
ø63	28	27	26	76	Rc 3/8	60	149	38	80	M18x1.5	64	105	20	20	3	51	60.5	20	11	36	23	60	35	62	171	52.5+ Stroke/2	30	82	14	35	86	104
ø80	36	32	34	94	Rc 1/2	78.5	188	43	98	M22x1.5	122	116	26.5	25	3.5	64	78.5	26.5	13	43	29	90	48	72.5	203.5	58+ Stroke/2	35	100	20	40	105	134
ø100	45	41	43	94	Rc 1/2	88.5	208	51	118	M26x1.5	122	128	25	30	4	64	88.5	25	16	43	29	90	53	71	230	64+ Stroke/2	40	121	20	40	127	150

Code			With switch						With bellows										
Bore size	TY	TZ	T0,T5 T2,T3		T1,T2Y T3Y, T2J		T2W, T3W		b	d	d*	L							
			RD	HD	RD	HD	RD	HD				50 or less	Over 50 to 100	Over 100 to 150	Over 150 to 200	Over 200 to 300	Over 300 to 400	Over 400 to 500	Over 500
ø50	87.5	53	13	13	12	12	15	15	47	47	48	22	36	49	63	90	119	146	(Stroke/3.6) + 7.5
ø63	87.5	55.5	13	13	12	12	15	15	45	47	48	22	36	49	63	90	119	146	(Stroke/3.6) + 7.5
ø80	106	61.5	14.5	14.5	13.5	13.5	16.5	16.5	58.5	53	55	14	26	38	49	72	96	119	(Stroke/4.3) + 2.5
ø100	117	68	18.5	18.5	17.5	17.5	20.5	20.5	69.5	61	65	20	32	42	53	76	98	120	(Stroke/4.5) + 9

*1 : For the L dimension, round up below the decimal point.
*2 : Refer to page 615 for dimensions of projecting section of T2YD switch.
*3 : For the dimensions of the accessories, refer to pages 470 and 471.

Dimensions

● Rod side hole trunnion (TD)

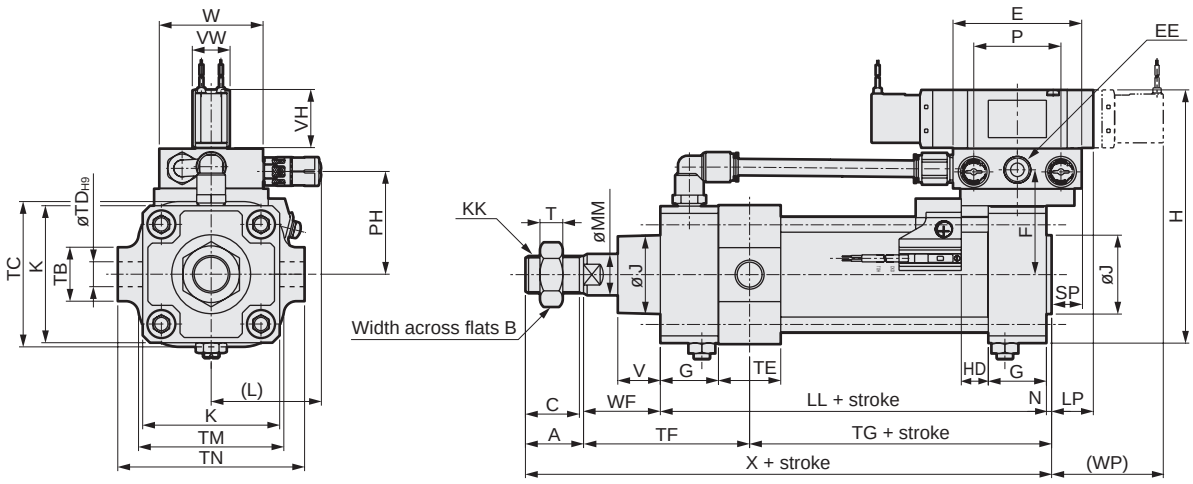

ø50 to ø63

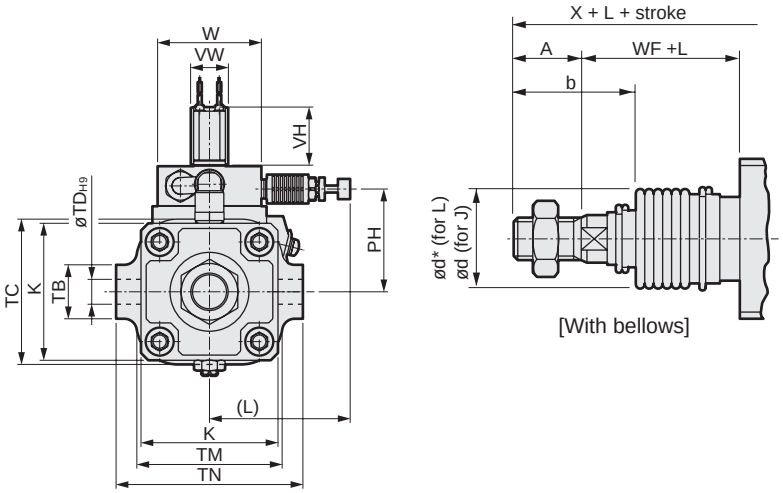

[With bellows]

ø80,ø100

Code	Rod side hole trunnion (TD) Basic dimensions																									Mounting method							
Bore size	A	B	C	E	EE	F	G	H	J	K	KK	L	LL	LP	MM	N	P	PH	SP	T	VH	VW	W	WF	WP	X	TB	TC	TD	TE	TF	TG	TM	TN
ø50	28	27	26	62	Rc 1/4	50.5	28	122	38	66	M18x1.5	60	101	20.5	20	2.5	42	49.5	14.5	11	28	18	50	37	54	168.5	26	67	12	30	80	60.5	70	90
ø63	28	27	26	76	Rc 3/8	60	30	149	38	80	M18x1.5	64	105	20	20	3	51	60.5	20	11	36	23	60	35	62	171	30	82	14	35	82.5	60.5	86	104
ø80	36	32	34	94	Rc 1/2	78.5	34	188	43	98	M22x1.5	122	116	26.5	25	3.5	64	78.5	26.5	13	43	29	90	48	72.5	203.5	35	100	20	40	102	65.5	105	134
ø100	45	41	43	94	Rc 1/2	88.5	36	208	51	118	M26x1.5	122	128	25	30	4	64	88.5	25	16	43	29	90	53	71	230	40	121	20	40	109	76	127	150

Code	With switch			With bellows										
Bore size	T0, T5 T2,T3 HD	T1,T2Y T3Y,T2J HD	T2W, T3W HD	b	d	d*	L 50 or less	Over 50 to 100	Over 100 to 150	Over 150 to 200	Over 200 to 300	Over 300 to 400	Over 400 to 500	*1 Over 500
ø50	13	12	15	47	47	48	22	36	49	63	90	119	146	(Stroke/3.6) + 7.5
ø63	13	12	15	45	47	48	22	36	49	63	90	119	146	(Stroke/3.6) + 7.5
ø80	14.5	13.5	16.5	58.5	53	55	14	26	38	49	72	96	119	(Stroke/4.3) + 2.5
ø100	18.5	17.5	20.5	69.5	61	65	20	32	42	53	76	98	120	(Stroke/4.5) + 9

*1 : For the L dimension, round up below the decimal point.
*2 : Refer to page 615 for dimensions of projecting section of T2YD switch.

* For the dimensions of the accessories, refer to pages 470 and 471.

About non-sag block

Depending on its stroke, a non-sag block will be added to the middle part of the cylinder.
The number of non-sag blocks to be added differs depending on the bore size and the stroke as shown in the table below.
Refer to Technical data 14 (Ending Page 70) as well.

Number of non-sag blocks depending on stroke

Tube size (mm)	Stroke (mm)	Number of non-sag blocks
ø40	1200 to 1600	1
ø50	1200 to 1800	1
	1801 to 2000	2
ø63	1200 to 1800	1
	1801 to 2500	2
ø80	1500 to 2000	1
	2001 to 2500	2
ø100	1500 to 2000	1
	2001 to 2500	2

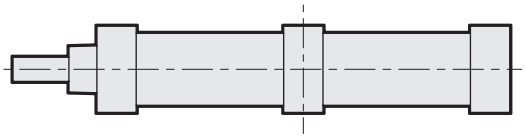

One non-sag block: To be added to the middle point between the covers.

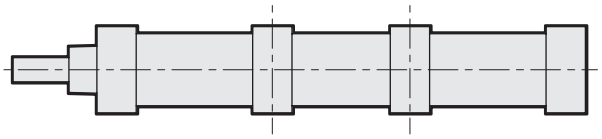

Two non-sag blocks: mount the 2 blocks so that the length of the 2 covers will be divided into 3 equal parts.

The dimensions of non-sag blocks are as shown in the figure below. When attaching the cylinder, take into account the dimensions of the non-sag blocks.

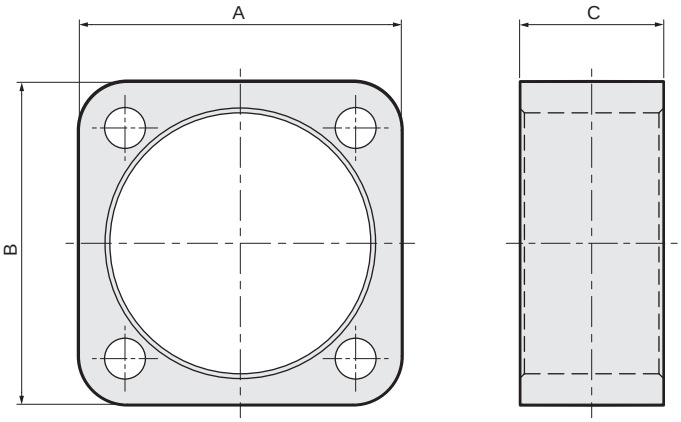

Tube size (mm)	Non-sag block dimensions		
	A	B	C
ø40	56	57	30
ø50	66	67	30
ø63	81	82	35
ø80	99	100	40
ø100	120	121	50

SCA2 Series common dimensions (T1, T2YD, HO* switch installation dimensions)

● With T1, T2YD switch

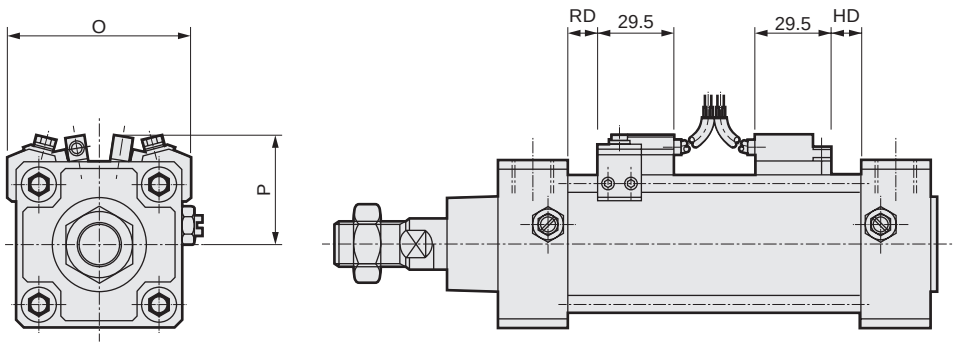

Code / Bore size (mm)	O	P	RD	HD	Q2 For rod side position locking RD	Q2 For head side position locking HD
ø40	66	40	10	10	14.5	14.5
ø50	73	44.5	12	12	17	17
ø63	84	50	12	12	18	18
ø80	104	60	13.5	13.5	22.5	22.5
ø100	120	68	17.5	17.5	28.5	28.5

● With H0* switch

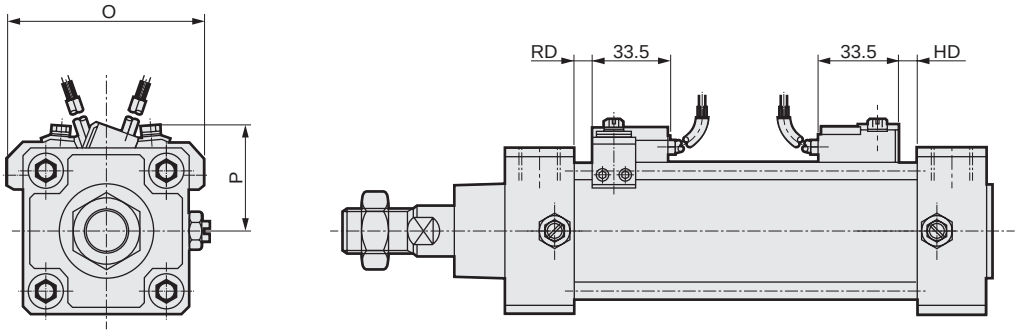

Code / Bore size (mm)	O	P	RD	HD
ø40	66	42	4	4
ø50	73	44	6	6
ø63	84	47	6	6
ø80	104	58	7.5	7.5
ø100	120	64	11.5	11.5

Pneumatic components

Safety Precautions

Be sure to read this section before use.

Refer to Intro Page 73 for general information of the cylinder, and to Intro Page 80 for general information of the cylinder switch.

Product-specific cautions: Medium bore size cylinder SCA2 Series

Design/selection

1. Common

CAUTION

■ Mount a speed controller on the cylinder.

Mount the speed controller on the cylinder.
Use within the working piston speed range of each series.

2. Position locking SCA2-Q2

WARNING

■ If pressure is supplied to port A when both ports are not pressurized and the piston is locked, the lock may not be released or the piston rod may suddenly pop out just after the lock is released. This can be extremely hazardous. To release the lock mechanism, make sure to supply pressure to port B. Check that load is not applied to the lock mechanism.

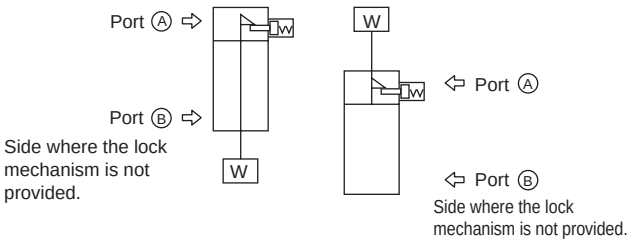

■ For usage where the drop rate is increased using the quick exhaust valve, the lock may not release normally because the cylinder body starts operating before the lock pin.
For the position locking cylinder, do not use the quick exhaust valve.

■ Do not use 3-position valves.

Do not use the cylinder in combination with 3-position (especially closed center metal seal type) valves. If the port at the side where the lock mechanism is provided is pressurized, the lock cannot be engaged. Even if it is locked once, the air leaked from the valve enters the cylinder, and the lock may be released after a certain period of time.

CAUTION

■ Cylinder load factor must be 50% or less.

If the load factor is high, the lock may not be released, or the lock section may be damaged.

■ If back pressure is applied to the locking mechanism, the lock may be released. Use a single solenoid valve, or an individual exhaust manifold.

■ Do not use multiple synchronized cylinders.

Do not use so that 1 workpiece is moved by synchronizing 2 or more position locking cylinders. Lock release may fail for one of the cylinders.

3. Low friction SCA2-U

WARNING

■ Durability differs based on working conditions and model characteristics.

This cylinder is a cylinder that has internal leakage.
Refer to specifications (page 534) for amount of leakage.

CAUTION

■ When using the cylinder for a balancer, etc., it may be advisable not to mount a speed controller in order to improve the supply and exhaust efficiency. Depending on the application, circuits ⓐto ⓒbelow are recommended.

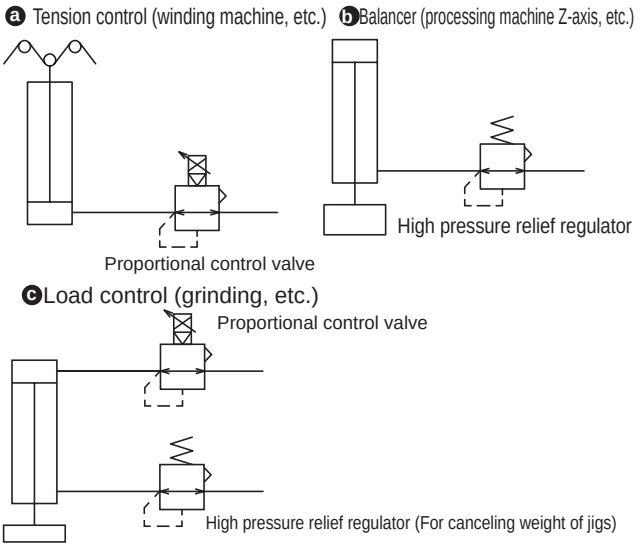

* To improve the supply and exhaust efficiency, make the volume of piping as large as possible.

■ Do not lubricate. The properties fluctuate.

■ Because poor quality air worsens the characteristics and adversely affects the durability, use clean air with the piping below.

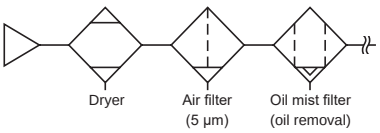

■ Mount the speed controller near the cylinder.

When installed far from the cylinder, the speed becomes unstable.

■ In general, the speed is stabler at higher air pressure and lower load factor.
Use at a 50% or less load factor.

4. Low hydraulic SCA2-H

⚠ CAUTION

■ This product is a pneumatic cylinder which enables the use of hydraulic fluid as its working fluid.
Not compliant with JIS standards on activation and leak inspection for hydraulic cylinders.

■ Select the low hydraulic cylinder by combining with the converter unit.
Because the optimized operation of the low hydraulic cylinder can be obtained by combining with the converter unit, select an adequate converter unit.

■ Keep the low hydraulic cylinder load to 50% or less of the theoretical output.
To attain performance similar to the hydraulic cylinder in constant speed operation and stopping accuracy, the low hydraulic cylinder load must be 50% or less.

■ Use petroleum-based turbine oil for the hydraulic fluid. Problems may occur if noncombustible hydraulic fluid is used.The adequate viscosity is approx. 40 to 100 mm^2/s at the ambient operating temperature. The temperature range is 15 to 35°C for ISO VG32. When using in a range exceeding ISO VG32, use ISO VG46 (25 to 45°C).

ISO VG32 turbine oil
Example: [Non-additive]
Idemitsu : Turbine Oil P32
Nisseki : Turbine Oil 32
Maruzen : Turbine Oil 32
Mitsubishi: Mitsubishi Turbine Oil 32
[Additive]
Idemitsu : Daphne Turbine Oil 32
Nisseki : FBK Turbine 32
Maruzen : Turbine Super 32

5. Coolant proof SCA2-G2/G3

⚠ CAUTION

■ Do not apply an eccentric load to the piston rod. The service life of the scraper or bearing could be shortened.
■ In the case that the G2 or G3 Series are not exposed to splattering of coolant or water, the lubrication of the piston rod will run out and the service life will be shortened. Use the G, G1 Series in this case.

6. Anti-spatter adherence SCA2-G4

⚠ WARNING

■ The durability of this cylinder series is improved in comparison to standard cylinders when used in an atmosphere exposed to spatter. But durability may be shorter than the standard cylinder when used in other atmospheres.

Mounting, installation and adjustment

1. Stroke adjustable SCA2-R

⚠ CAUTION

■ Securely lock the stud bolt with the lock nut.

■ Remove the air before adjusting the stroke.
Do not tighten the stud bolt in the state shown in Fig. 1.
Tighten the stud bolt in the state shown in Fig. 2.
Do not tighten the lock nut in the state shown in Fig. 2.
Tighten the lock nut in the state shown in Fig. 1.
When not using the adjustment methods above, the seal washer will break after 1 or 2 usages.

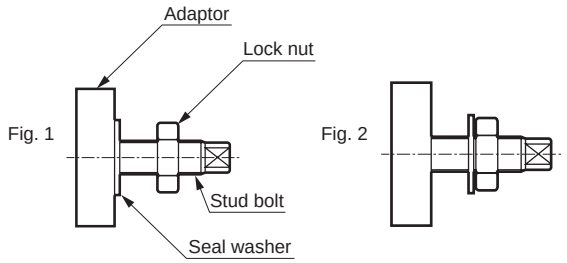

■ Because a seal washer is used for sealing the stud bolt, the sealing cannot withstand frequent adjustment.

■ If the stroke is adjusted, the cushion cannot function.

2. Heat resistant SCA2-T

⚠ CAUTION

■ Magnet is not built in.

3. Position locking SCA2-Q2

⚠ CAUTION

■ The lock mechanism functions at the stroke end, so that if the stopper is engaged during the stroke by the external stopper, the lock mechanism may not work and the piston could fall. When setting a load, make sure to check that the lock mechanism functions before installing the product.

■ Supply pressure equal to or higher than the min. working pressure to the port on the lock mechanism side.

■ When the piping at the side where the lock mechanism is provided is long and thin, or when the speed controller is far away from the cylinder port, note that it takes time to engage the lock. Clogging in the silencer mounted on the EXH port of the valve may cause the same result.

4. Low friction SCA2-U

⚠ CAUTION

■ Do not apply a lateral load to the cylinder.
Install the sliding guide so that it is not twisted.
- When the load or the resistance fluctuates, operation becomes unstable.
- For the long stroke, the piston rod's self-weight causes the speed to become unstable. Install the guide before use.
- With a large difference between static friction and kinematic friction of the guide, operation becomes unstable.

■ Avoid using this product where vibration is present.
- The product will be adversely affected by vibration and operation will become unstable.

■ Avoid using in environments with water vapor or high humidity or in alkaline atmospheres.

5. Low hydraulic SCA2-H

■ Do not use a push-in fitting to pipe the low hydraulic cylinder.
Do not use a push-in fitting because oil leakage may occur if the push-in fitting is used to pipe the low hydraulic cylinder.

■ Use a steel pipe or copper tube to pipe the low hydraulic cylinder.
Similar to the hydraulic circuit, higher surge than working pressure may be generated in the low hydraulic cylinder piping, requiring safe piping materials.

■ Avoid using this product where air and hydraulics are applied to one side.
An entry of air into the oil may occur, and this could result in malfunction.

Use/maintenance

1. Position locking SCA2-Q2

⚠ WARNING

■ For safety purposes, prevent the load from falling under its own weight during maintenance.

■ In the case of the cylinder with air cushion, if the air cushion needle at the lock mechanism side is tightened excessively, the piston bounds at the stroke end and the sleeve and stopper piston collide strongly, which may result in damage to the locking mechanism. Also, if the air cushion needle is opened too much, the piston bounces off at the stroke end, which may similarly damage the mechanism. Adjust the needle of the air cushion so that there is no bound.

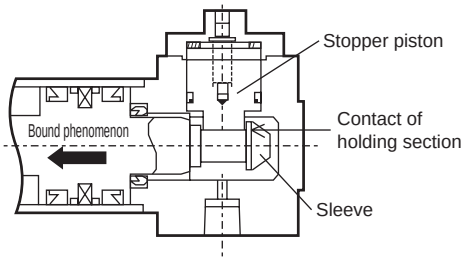

Inspect the piston once or twice a year to make sure there is no damage to the retainer caused by this phenomenon.

⚠ CAUTION

■ After the lock mechanism is manually operated, make sure to confirm manual operation and return the mechanism to the original state before use. Do not perform manual operation except for adjustment, as it is dangerous.

■ When mounting or adjusting the cylinder, release the lock.
If mounting work, etc., is done while the lock is engaged, the lock part may be damaged.

■ Use the speed controller with meter-out.
If the meter-in control is used, the lock may not be able to be released.

■ At the side where the lock mechanism is attached, be sure to use the cylinder from the stroke end.
If the cylinder piston does not reach the stroke end, the lock may not be engaged or the lock may not be able to be released.

■ Manual override non-locking release method
By screwing the hexagon socket head cap screw into the stopper piston and pulling the bolt 4 mm with force of 20 N or more, the stopper piston moves and the lock is released. (when horizontally installed with no load or with the opposite side port pressurized). When the screw is released, the internal spring causes the stopper piston to return. When it fits into the piston rod groove, the piston is locked.

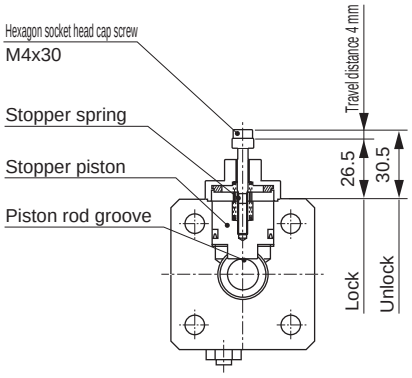

■ Manual override locking release method
By rotating the round nut leftward (counterclockwise), the stopper piston moves and the lock is released. Rotating the round nut to the right (clockwise) to set it in the locked position causes the stopper piston to return. When it fits into the piston rod groove, the piston is locked.

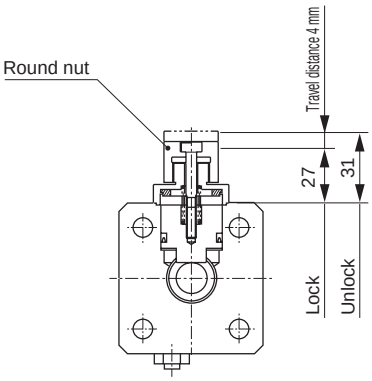

2. Low friction SCA2-U

⚠ CAUTION

■ Do not disassemble the product. Once disassembled, the performance may not be retained.
For this product, just the repair parts are not available.

3. Low hydraulic SCA2-H

⚠ CAUTION

■ Regularly vent air from the low hydraulic cylinder.
Air may accumulate in the low hydraulic cylinder, so vent air before starting operations, etc. Vent air with the air vent valve provided on piping.

■ If moisture enters the hydraulic fluid, or if hydraulic fluid becomes cloudy or discolored, replace it with new oil. Use the same brand of oil when replacing.

SCS2

Large bore size cylinder

ø125/ø140/ø160
ø180/ø200/ø250

Standard

Overview

Large bore size among general purpose cylinders
(ø125 to ø250) series. Wide range of variations. This cylinder is now even more reliable.

Lighter than ever before!
Adopting an aluminum cover and tube has halved the product weight.

Features

Compact switch equipped
The smaller T-switch than the conventional
Saves space by eliminating protrusions when mounted.

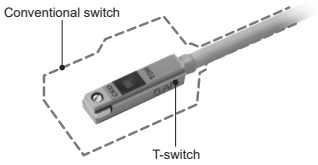

Magnet provided as standard
[SCS2-LN, LH]
The ø250 also has a switch. Now all models (LN, LH) can handle additionally mounted switches.

Port and needle on the same surface
The air supply/exhaust ports and cushion needle are positioned on the same surface. Easier installation and adjustment of the cylinder.

Dimensional compatibility [except LH]
Dimensional compatibility with the conventional model (SCS) facilitates maintenance.
* The piping port positions are different.

Metallic silver color
The silver surface (metallic silver without paint) matches various devices.

CONTENTS

Series variation	622
Variation and option combination selection table	624
● Double acting/single rod/lubrication (SCS2)	626
● Double acting/single rod/no-lubrication (SCS2-N)	626
● Double acting/stroke adjustable (SCS2-P)	640
● Double acting/heat resistant (SCS2-T)	644
● Double acting/double rod (SCS2-D)	648
● Double acting/double rod/no-lubrication (SCS2-LND)	648
● Double acting/back to back (SCS2-B)	654
● Double acting/2-stage (SCS2-W)	658
● Double acting/low hydraulic (SCS2-H)	662
● Double acting/rubber scraper (SCS2-G)	668
SCS2 Series common accessory dimensions	639
⚠ Safety precautions	671

The cylinder switches T2YH, T2YV, T3YH, and T3YV are scheduled for end of production at the end of December 2023.

Large bore size cylinder SCS2 Series

Variation	Model No. JIS symbol	Bore size (mm)	Standard stroke (mm) 50	75	100	150	200	250	300	Min. stroke (mm)	Max. stroke (mm)	Available stroke (mm)	Custom stroke (per mm)	Mounting: Basic 00	Axial foot LB	Rod side flange FA	Head side flange FB	Eye bracket CA
Double acting/ lubrication	SCS2	ø125/ø140/ø160	●	●	●	●	●	●	●	1	800	2000	1	●	●	●	●	●
		ø180	●	●	●	●	●	●	●		900			●	●	●	●	●
		ø200	●	●	●	●	●	●	●		1000			●	●	●	●	●
		ø250	●	●	●	●	●	●	●		1200			●	●	●	●	●
Double acting/ no-lubrication/ with switch	SCS2-N	ø125/ø140/ø160	●	●	●	●	●	●	●	1	800	2000	1	●	●	●	●	●
		ø180	●	●	●	●	●	●	●		900			●	●	●	●	●
		ø200	●	●	●	●	●	●	●		1000			●	●	●	●	●
		ø250	●	●	●	●	●	●	●		1200			●	●	●	●	●
Double acting/ stroke adjustable (push)	SCS2-P 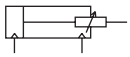	ø125/ø140/ø160	○	○	○	○	○	○	○	25	800	800	1	○	○	○	○	
		ø180	○	○	○	○	○	○	○		900	900		○	○	○	○	
		ø200	○	○	○	○	○	○	○		1000	1000		○	○	○	○	
		ø250	○	○	○	○	○	○	○		1200	1200		○	○	○	○	
Double acting/ heat resistant	SCS2-T	ø125/ø140/ø160	●	●	●	●	●	●	●	1	800	800	1	●	●	●	●	●
		ø180	●	●	●	●	●	●	●		900	900		●	●	●	●	●
		ø200	●	●	●	●	●	●	●		1000	1000		●	●	●	●	●
		ø250	●	●	●	●	●	●	●		1200	1200		●	●	●	●	●
Double acting/ double rod/with switch	SCS2-D 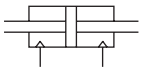	ø125/ø140/ø160	○	○	○	○	○	○	○	1	800	800	1	○	○	○	○	
		ø180	○	○	○	○	○	○	○		900	900		○	○	○	○	
		ø200	○	○	○	○	○	○	○		1000	1000		○	○	○	○	
		ø250	○	○	○	○	○	○	○		1200	1200		○	○	○	○	
Double acting/ back to back	SCS2-B	ø125/ø140/ø160	○	○	○	○	○	○	○	1	800	800	1	○	○	○		
		ø180	○	○	○	○	○	○	○		900	900		○	○	○		
		ø200	○	○	○	○	○	○	○		1000	1000		○	○	○		
		ø250	○	○	○	○	○	○	○		1200	1200		○	○	○		
Double acting/2-stage	SCS2-W (Indicator	ø125/ø140/ø160	○	○	○	○	○	○	○	2	800	800	1	○	○	○	○	○
		ø180	○	○	○	○	○	○	○		900	900		○	○	○	○	○
		ø200	○	○	○	○	○	○	○		1000	1000		○	○	○	○	○
		ø250	○	○	○	○	○	○	○		1200	1200		○	○	○	○	○
Double acting/ low hydraulic	SCS2-H	ø125/ø140/ø160	○	○	○	○	○	○	○	20	800	800	1	○	○	○	○	○
		ø180	○	○	○	○	○	○	○		900	900		○	○	○	○	○
		ø200	○	○	○	○	○	○	○		1000	1000		○	○	○	○	○
		ø250	○	○	○	○	○	○	○		1200	1200		○	○	○	○	○
Double acting/ rubber scraper	SCS2-G	ø125/ø140/ø160	○	○	○	○	○	○	○	1	800	800	1	○	○	○	○	○
		ø180	○	○	○	○	○	○	○		900	900		○	○	○	○	○
		ø200	○	○	○	○	○	○	○		1000	1000		○	○	○	○	○
		ø250	○	○	○	○	○	○	○		1200	1200		○	○	○	○	○

●: Standard, ◎: Option, ○: Made to order, Not available

Mounting							Cushion				Option							Accessory				Switch	Page
Clevis bracket	Intermediate trunnion	Rod side trunnion	Head side trunnion	Intermediate supporting hole trunnion	Rod side hole trunnion	Head side trunnion	Without cushion	Both sides cushioned	Rod side cushioned	Head side cushioned	With cushion section check valve	Bellows (100°C)	Bellows (250°C)	Piston rod material change (stainless steel)	Cushion needle position S	Cushion needle position T	Copper and PTFE free	Rod eye	Rod clevis	Eye bracket	Clevis bracket		
CB	TC	TA	TB	TF	TD	TE	N	B	R	H	C2	J	L	M	S	T	P6	I	Y	B1	B2		
●	●	●	●	○	○	○	●	●	●	●	◎	◎	◎	◎	◎	◎	○	◎	◎	◎	◎		626
●	●	●	●				●	●	●	●	◎	◎	◎	◎	◎	◎	○	◎	◎	◎	◎		
●	●	●	●				●	●	●	●	◎	◎	◎	◎	◎	◎	○	◎	◎	◎	◎		
●	●	●	●				●	●	●	●	◎	◎	◎	◎	◎	◎	○	◎	◎	◎	◎		
●	●	●	●	○	○	○	●	●	●	●	◎	◎	◎	◎	◎	◎	○	◎	◎	◎	◎	SCS2-LN◎	626
●	●	●	●				●	●	●	●	◎	◎	◎	◎	◎	◎	○	◎	◎	◎	◎		
●	●	●	●				●	●	●	●	◎	◎	◎	◎	◎	◎	○	◎	◎	◎	◎		
●	●	●	●				●	●	●	●	◎	◎	◎	◎	◎	◎	○	◎	◎	◎	◎		
	○	○	○	○	○	○	○	○	○	○	○	○	○	○	○	○	○	○	○	○	○	SCS2-LNP○	624
	○	○	○				○	○	○	○	○	○	○	○	○	○	○	○	○	○	○		
	○	○	○				○	○	○	○	○	○	○	○	○	○	○	○	○	○	○		
	○	○	○				○	○	○	○	○	○	○	○	○	○	○	○	○	○	○		
●	●	●	●	○	○	○	●	●	●	●	◎		◎	◎	◎	◎		◎	◎	◎	◎		644
●	●	●	●				●	●	●	●	◎		◎	◎	◎	◎		◎	◎	◎	◎		
●	●	●	●				●	●	●	●	◎		◎	◎	◎	◎		◎	◎	◎	◎		
●	●	●	●				●	●	●	●	◎		◎	◎	◎	◎		◎	◎	◎	◎		
	○	○	○	○	○	○	○	○	○	○	○	○	○	○	○	○	○	○	○	○	○	SCS2-LND◎	648
	○	○	○				○	○	○	○	○	○	○	○	○	○	○	○	○	○	○		
	○	○	○				○	○	○	○	○	○	○	○	○	○	○	○	○	○	○		
	○	○	○				○	○	○	○	○	○	○	○	○	○	○	○	○	○	○		
		○	○		○	○	○	○	○	○	○	○	○	○	○	○	○	○	○	○	○	SCS2-LNB○	654
		○	○				○	○	○	○	○	○	○	○	○	○	○	○	○	○	○		
		○	○				○	○	○	○	○	○	○	○	○	○	○	○	○	○	○		
		○	○				○	○	○	○	○	○	○	○	○	○	○	○	○	○	○		
○		○	○		○	○	○	○	○	○	○	○	○	○	○	○	○	○	○	○	○	SCS2-LNW○	658
○		○	○				○	○	○	○	○	○	○	○	○	○	○	○	○	○	○		
○		○	○				○	○	○	○	○	○	○	○	○	○	○	○	○	○	○		
○		○	○				○	○	○	○	○	○	○	○	○	○	○	○	○	○	○		
○	○	○	○	○	○	○	○	○	○	○	○	○	○	○	○	○	○	○	○	○	○	SCS2-LH○	662
○	○	○	○				○	○	○	○	○	○	○	○	○	○	○	○	○	○	○		
○	○	○	○				○	○	○	○	○	○	○	○	○	○	○	○	○	○	○		
○	○	○	○				○	○	○	○	○	○	○	○	○	○	○	○	○	○	○		
○	○	○	○	○	○	○	○	○	○	○	○	○	○	○	○	○	○	○	○	○	○	SCS2-LNG○	668
○	○	○	○				○	○	○	○	○	○	○	○	○	○	○	○	○	○	○		
○	○	○	○				○	○	○	○	○	○	○	○	○	○	○	○	○	○	○		
○	○	○	○				○	○	○	○	○	○	○	○	○	○	○	○	○	○	○		

Variation and option combination selection table

●: Standard
◎: Option
○: Available (made-to-order product)
△: Available depending on conditions (Contact CKD.)
x: Not available

Category		Variation											Port thread			Option						
	Category	Double acting/lubrication	Double acting/no-lubrication	Double acting/with switch	Double acting double rod	Back to back	Double piston	Adjustable stroke push	Low hydraulic	Heat resistance (120°C)	Rubber scraper	NPT	G		With cushion section check valve	Neoprene with bellows	Silicone rubber with bellows	Piston rod material stainless steel	Cushion needle position specification	Copper and PTFE free	Specify piston rod end form
	Code	None	N	LN	D	B	W	P	H	T	G	N	G		C2	J	L	M	R,S,T	P6	N*
Variation	Double acting/lubrication											○	○		◎	◎	◎	◎	◎	○	○
Variation	Double acting/no-lubrication				○	○	○	○	x	*1	○	○	○		◎	◎	◎	◎	◎	○	○
Variation	Double acting/with switch				○	○	○	○	○	x	○	○	○		◎	◎	◎	◎	◎	○	○
Variation	Double acting double rod					x	x	x	○	○	○	○	○		◎	◎	◎	◎	◎	○	○
Variation	Back to back						x	x	○	○	○	○	○		◎	◎	◎	◎	◎	○	○
Variation	Double piston							△1	○	○	○	○	○		◎	◎	◎	◎	◎	○	○
Variation	Adjustable stroke push								○	○	△	○	○		◎	◎	◎	◎	◎	○	○
Variation	Low hydraulic									x	○	○	○		◎	◎	◎	◎	◎	○	○
Variation	Heat resistant (120°C)										x	○	○		◎	△2	◎	◎	◎	○	○
Variation	Rubber scraper											○	○		◎	◎	◎	◎	◎	○	○
Port thread	NPT												x		○	○	○	○	○	○	○
Port thread	G														○	○	○	○	○	○	○
Option	With cushion section check valve															◎	◎	◎	◎	○	○
Option	Neoprene with bellows																x	◎	◎	○	○
Option	Silicone rubber with bellows																	◎	◎	○	○
Option	Piston rod material stainless steel																		◎	○	○
Option	Cushion needle position specification																			○	○
Option	Copper and PTFE free																				○
Option	Specify piston rod end form																				
Accessory	Cylinder switch	Listed separately	◎	◎	◎	◎	◎	◎	◎	◎	◎	◎	◎		◎	◎	◎	◎	◎	◎	◎
Accessory	Rod eye	I	◎	◎	◎	◎	◎	◎	◎	◎	◎	◎	◎		◎	◎	◎	◎	◎	◎	△
Accessory	Rod clevis	Y	◎	◎	◎	◎	◎	◎	◎	◎	◎	◎	◎		◎	◎	◎	◎	◎	◎	△
Accessory	Eye bracket	B1	◎	◎	◎	◎	◎	◎	◎	◎	◎	◎	◎		◎	◎	◎	◎	◎	◎	◎
Accessory	Clevis bracket	B2	◎	◎	◎	◎	◎	◎	◎	◎	◎	◎	◎		◎	◎	◎	◎	◎	◎	◎

*1 : Lubrication is not possible for the heat resistant T (no-lubrication).
△1 : Available on the S2 side only.
△2 : Compatible with working temperature of up to 100°C.

[Example of model No.]

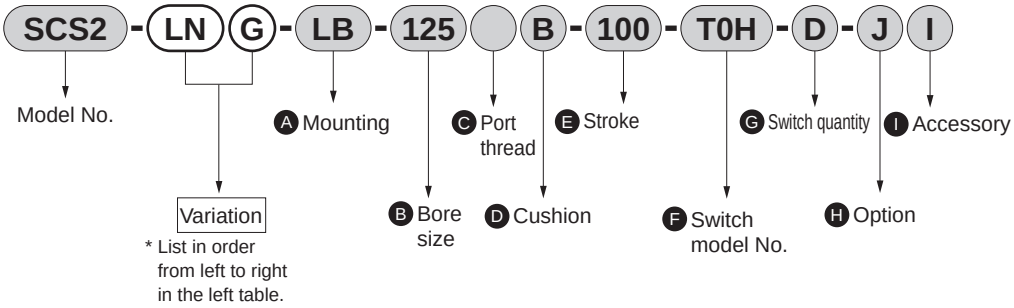

Model No.: Large bore size cylinder

● Variation	: No-lubrication with switch/low hydraulic
Ⓐ Mounting	: Axial foot
Ⓑ Bore size	: ø125 mm
Ⓒ Port thread	: Rc thread
Ⓓ Cushion	: Both sides cushioned
Ⓔ Stroke	: 100 mm
Ⓕ Switch model No.	: Reed T0H switch, lead wire 1m
Ⓖ Switch quantity	: 2
Ⓗ Option	: Bellows material, for max. ambient temperature 100°C
Ⓘ Accessory	: Rod eye

*1: The back to back includes two cylinders. Specify the model No. as below when ordering variation.
For S1 variations only, insert the variation code before the stroke of S1.
(Example) SCS2-B-125-H50-75: Only S1 is the low hydraulic.
For S2 variations only, insert the variation code before the stroke of S2.
(Example) SCS2-B-125-50-H75: Only S2 is the low hydraulic.
When ordering the same variation for S1 and S2, insert the variation code before the bore size.
(Example) SCS2-BH-125-50-75: Both S1 and S2 are the low hydraulic.

Large bore size cylinder
Double acting/single rod/lubrication/no-lubrication

SCS2 Series

● Bore size: ø125/ø140/ø160/ø180/ø200/ø250

JIS symbol

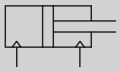

RoHS

Specifications

Item		SCS2/SCS2-N/SCS2-LN					
Bore size	mm	ø125	ø140	ø160	ø180	ø200	ø250
Actuation		Double acting					
Working fluid		Compressed air					
Max. working pressure	MPa	1.0 (≈150 psi, 10 bar)					
Min. working pressure	MPa	0.05 (≈7.3 psi, 0.5 bar)					
Proof pressure	MPa	1.6 (≈230 psi, 16 bar)					
Ambient temperature	°C	-5 (23°F) to 60 (140°F) (no freezing)					
Port size		Rc1/2	Rc3/4				Rc1
Stroke tolerance	mm	$^{+1.0}_{0}$(to 300), $^{+1.4}_{0}$(to 1000), $^{+1.8}_{0}$(to 1200)					
Working piston speed	mm/s	20 to 1000 (Operate within the absorbed energy.)					
Cushion		Air cushion					
Effective air cushion length	mm	21.6	21.6	21.6	21.6	26.6	26.6
Lubrication		Required (use turbine oil class 1 ISO VG32 for lubrication)/Not required for SCS2-N/LN					
Allowable absorbed energy	J Cushioned	63.5	91.5	116	152	233	362
	J Without cushion	0.371	0.386	0.386	0.958	1.08	2.32
	J Without cushion	Without any cushion, this product cannot absorb large energy generated by an external load. We recommend using an external shock absorber.					

Stroke

Bore size (mm)	Standard stroke (mm)	Max. stroke (mm)	Available stroke (mm)	Min. stroke (mm)	Trunnion, min. stroke (mm)
ø125	50/75/100/150/200/250/300	800	2000	1	23
ø140					25
ø160					27
ø180		900			28
ø200		1,000			28
ø250		1,200			28

*1: The custom stroke is available in 1 mm increments.
*2: If the max. stroke is exceeded, product specifications may not be met, depending on operating conditions. Contact CKD in this case.

● Non-sag block

A non-sag block will be added to the middle part of the cylinder if the stroke is in the range given in the table below.

Additional stroke to the non-sag block

Bore size (mm)	Stroke
ø125	1801 to 2000
ø140	

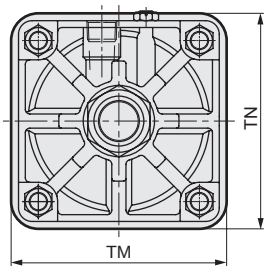

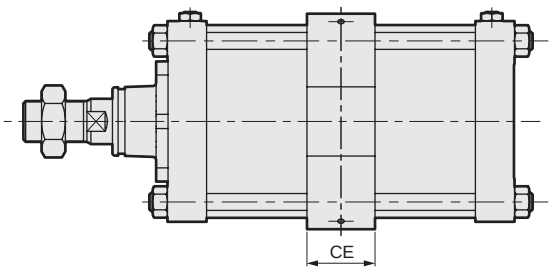

Code / Bore size (mm)	TM	TN	CE
ø125	150	150	50
ø140	190	170	55

Min. stroke with switch

Item / Bore size (mm)		Stroke when mounted on the same surface	Stroke of intermediate supporting hole trunnion	Stroke of rod side supporting hole trunnion	Stroke of head side supporting hole trunnion
Switch	Sketch / Bore size	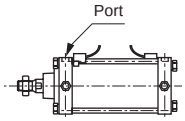	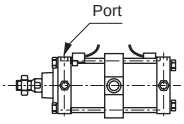	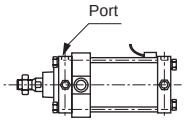 Position cannot be detected at the rod side stroke end.	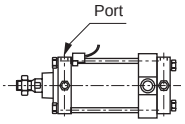 Position cannot be detected at the head side stroke end.
Reed switch (T*)	ø125	20 or more	120 or more	70 or more	
	ø140		125 or more	75 or more	
	ø160		130 or more	80 or more	
	ø180		135 or more	85 or more	
	ø200		140 or more	90 or more	
	ø250		150 or more	100 or more	

Switch specifications

● 1-color/2-color LED/for AC magnetic field proof

Item	2-wire proximity				3-wire proximity				2-wire reed							2-wire proximity
	T1H/ T1V	T2H/T2V/ T2JH/T2JV	T2YH/ T2YV	T2WH/ T2WV	T3H/ T3V	T3PH/ T3PV	T3YH/ T3YV	T3WH/ T3WV	T0H/T0V		T5H/T5V		T8H/T8V			T2YD (*4) T2YDT
Applications	For programmable controller, relay, compact solenoid valve	Dedicated for programmable controller			For programmable controller, relay				For programmable controller, relay		For programmable controller, relay, IC circuit (no indicator lamp), serial connection		For programmable controller, relay			For programmable controller
Output method	-				NPN output	PNP output	NPN output	NPN output	-							
Pwr. supp. V.	-				10 to 28 VDC				-							
Load voltage	85 to 265 VAC	10 to 30 VDC		24 VDC ±10%	30 VDC or less				12/24 VDC	100/110 VAC	5/12/24 VDC	100/110 VAC	12/24 VDC	110 VAC	220 VAC	24 VDC ±10%
Load current	5 to 100 mA	5 to 20 mA (*3)			100 mA or less		50 mA or less		5 to 50 mA	7 to 20 mA	50 mA or less	20 mA or less	5 to 50 mA	7 to 20 mA	7 to 10 mA	5 to 20 mA
Indicator	LED (Lit when ON)	LED (Lit when ON)	Red/green LED (Lit when ON)	Red/green LED (Lit when ON)	LED (Lit when ON)	Yellow LED (Lit when ON)	Red/green LED (Lit when ON)	Red/green LED (Lit when ON)	LED (Lit when ON)		No indicator lamp		LED (Lit when ON)			Red/green LED (Lit when ON)
Leakage current	≤ 1 mA at 100 VAC, ≤ 2 mA at 200 VAC	1 mA or less			10 μA or less				0 mA							1 mA or less
Weight g	1 m:33	1 m:18	1 m:33	1 m:18	1 m:18		1 m:33	1 m:18	1 m:18 3 m:49 5 m:80				1 m:33			1 m:61
	3 m:87	3 m:49	3 m:87	3 m:49	3 m:49		3 m:87	3 m:49					3 m:87			3 m:166
	5 m:142	5 m:80	5 m:142	5 m:80	5 m:80		5 m:142	5 m:80					5 m:142			5 m:272

*1 : Refer to Ending Page 1 for detailed switch specifications and dimensions.
*2 : Switches other than the above models, such as switches with connectors, are also available. Refer to Ending Page 1.
*3 : Max. load current: 20 mA at 25°C. The current is lower than 20 mA if the operating ambient temperature around the switch is higher than 25°C. (5 to 10 mA at 60°C)
*4 : Switch for AC magnetic field (T2YD/T2YDT) cannot be used in DC magnetic field.

Cylinder weight

(Unit: kg)

Item/mounting / Bore size (mm)	Product weight when stroke (S) = 0 mm						Switch weight		Additional weight per S = 100mm
	Basic (00)	Axial foot (LB)	Flange (FA/FB)	Eye bracket (CA)	Clevis bracket (CB)	Trunnion (TA/TB/TC)	Switch	Mounting bracket	
ø125	7.22	8.72	10.52	10.22	10.32	10.62	Refer to the weight in the switch specifications.	0.028	1.54
ø140	9.35	11.35	14.75	13.15	13.35	12.55		0.030	1.78
ø160	12.35	15.45	19.25	17.35	17.65	18.75		0.034	2.22
ø180	16.75	21.25	28.75	24.15	24.65	24.85		0.038	2.96
ø200	22.78	28.48	36.48	32.28	32.48	34.58		0.040	3.54
ø250	40.51	48.91	66.41	64.51	59.01	69.21		0.045	5.38

(Example) Product weight of SCS2-LN-LB-125B-300-T0H-D

- ● Product weight for S = 0 mm stroke ····· 8.72 kg
- ● Additional weight for S = 300 mm stroke ····· $1.54 \times \frac{300}{100} = 4.62$ kg
- ● Weight of 2 switches (T0H-D) ····· 0.018 x 2 = 0.036 kg
- ● Product weight with 2 switch brackets ··· 0.028 x 2 = 0.056 kg
- ● Product weight ····· 8.72 + 4.62 + 0.036 + 0.056 = 13.432 kg

SCP*3
CMK2
CMA2
SCM
SCG
SCA2
SCS2
CKV2
CAV2/COVP/N2
SSD2
SSG
SSD
CAT
MDC2
MVC
SMG
MSD/MSDG
FC*
STK
SRL3
SRG3
SRM3
SRT3
MRL2
MRG2
SM-25
ShkAbs
FJ
FK
Spd Contr
Ending

How to order

Lubrication without switch(without magnet for switch)

SCS2 — LB - 125 ◯ B - 50 — J Y

No-lubrication without switch(without magnet for switch)

SCS2-N — LB - 125 ◯ B - 50 — J Y

No-lubrication with switch(built-in magnet for switch)

SCS2-LN - LB - 125 ◯ B - 50 - T0H - R - J Y

Model No. — Ⓐ Mounting — Ⓑ Bore size — Ⓒ Port thread — Ⓓ Cushion — Ⓔ Stroke — Ⓕ Switch model No. — Ⓖ Switch quantity *2 — Ⓗ Option *3 — Ⓘ Accessory *5

Code	Description
Ⓐ Mounting	
00	Basic
LB	Axial foot
FA	Rod side flange
FB	Head side flange
CA	Eye bracket
CB	Clevis bracket (Pin and snap ring attached)
TC	Intermediate trunnion
TA	Rod side trunnion
TB	Head side trunnion

Ⓑ Bore size (mm)

125	ø125
140	ø140
160	ø160
180	ø180
200	ø200
250	ø250

Ⓒ Port thread

Blank	Rc thread
N	NPT thread (made to order)
G	G thread (made-to-order product)

Ⓓ Cushion

B	Both sides cushioned
R	Rod side cushioned
H	Head side cushioned
N	Without cushion

Ⓔ Stroke (mm)

Bore size	Stroke Note2	Available stroke	Custom stroke
ø125 to ø160	1 to 800	2000	In 1 mm increments
ø180	1 to 900	2000	
ø200	1 to 1000	2000	
ø250	1 to 1200	2000	

Ⓕ Switch model No.

Lead wire Straight type	Lead wire L-shaped	Contact	Voltage AC	Voltage DC	Indicator	Lead wire
T0H*	T0V*	Reed	●	●	1-color LED	2-wire
T5H*	T5V*	Reed	●	●	No indicator lamp	2-wire
T8H*	T8V*	Reed	●	●	1-color LED	2-wire
T1H*	T1V*	Proximity	●		1-color LED	2-wire
T2H*	T2V*	Proximity		●	1-color LED	2-wire
T3H*	T3V*	Proximity		●	1-color LED	3-wire
T3PH*	T3PV*	Proximity		●	1-color LED (PNP output)	3-wire
T2WH*	T2WV*	Proximity		●	2-color LED	2-wire
T2YH*	T2YV*	Proximity		●	2-color LED	2-wire
T3WH*	T3WV*	Proximity		●	2-color LED	3-wire
T3YH*	T3YV*	Proximity		●	2-color LED	3-wire
T2YD*	-	Proximity		●	2-color LED AC magnetic field	2-wire
T2YDT*	-	Proximity		●	2-color LED AC magnetic field	2-wire
T2JH*	T2JV*	Proximity		●	1-color LED off-delay	2-wire

*** Lead wire length**

Blank	1 m (standard)
3	3 m (option)
5	5 m (option)

Ⓖ Switch quantity

R	1 on rod side
H	1 on head side
D	2
T	3
4	4

Ⓗ Option

		Max. ambient temp.	Instantaneous max. temp.
C2	With cushion section check valve		
J	Bellows	100°C	200°C
L	Bellows	250°C	400°C
M	Piston rod, rod nut material (Stainless steel)		

*4

Blank	Cushion needle position (standard)	Standard
R	Cushion needle position R	
S	Cushion needle position S	
T	Cushion needle position T	
P6	Copper and PTFE free (made to order)	

Ⓘ Accessory

I	Rod eye
Y	Rod clevis (Pin and snap ring attached)
B1	Eye bracket
B2	Clevis bracket (Pin and snap ring attached)

⚠ Precautions for model No. selection

***1: Refer to page 627 for the min. stroke with switch.**

*2: When selecting TA or TB as mounting, the number of switches is limited to "H" (1 on head side) for TA, and "R" (1 on rod side) for TB.

*3: Instantaneous max. temp. is the temperature when sparks or cutting chips, etc., instantaneously contact the bellows.

*4: Check below for the cushion needle position indication.

*5: "I" and "Y" cannot be selected together.

[Example of model No.]

SCS2-LN-LB-125B-50-T0H-R-JY

Model: Medium bore size cylinder, double acting/Lubrication/No-lubrication

Model No.: No-lubrication with switch

Ⓐ Mounting : Axial foot
Ⓑ Bore size : ø125 mm
Ⓒ Port thread : Rc thread
Ⓓ Cushion : Both sides cushioned
Ⓔ Stroke : 50mm
Ⓕ Switch model No. : Reed T0H switch, lead wire 1m
Ⓖ Switch quantity : 1 on rod side
Ⓗ Option : Bellows material for max. ambient temperature 100°C
Ⓘ Accessory : Rod clevis

Cushion needle position

(Needle position with the port on the top when viewed from the rod end)

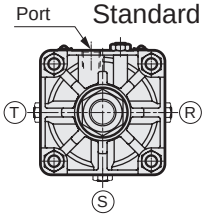

Certification of second class pressure vessel

Stroke

Bore size	Stroke
ø160	1948 or more
ø180	1526 or more
ø200	946 or more
ø250	752 or more

How to order switch

● Switch body + mounting bracket set

SCS2-LN - T0H - 125

- T0H: Switch model No. (Item Ⓕ on page 628)
- 125: Bore size (Item Ⓑ on page 628)

● Switch body only

SW - T0H

- T0H: Switch model No. (Item Ⓕ on page 628)

● Mounting bracket set

SCS2-LN - TS - 125

- TS: Mounting bracket
- 125: Bore size (Item Ⓑ on page 628)

Mounting bracket	
TS	T-switch
T	T2YD switch

Theoretical thrust table

(Unit: N)

Bore size (mm)	Operating direction	Working pressure MPa 0.05	0.1	0.15	0.2	0.3	0.4	0.5	0.6	0.7	0.8	0.9	1.0
ø125	Push	$6.14x10^2$	$1.23x10^3$	$1.84x10^3$	$2.45x10^3$	$3.68x10^3$	$4.91x10^3$	$6.14x10^3$	$7.36x10^3$	$8.59x10^3$	$9.82x10^3$	$1.10x10^4$	$1.23x10^4$
	Pull	$5.73x10^2$	$1.15x10^3$	$1.72x10^3$	$2.29x10^3$	$3.44x10^3$	$4.59x10^3$	$5.73x10^3$	$6.88x10^3$	$8.03x10^3$	$9.17x10^3$	$1.03x10^4$	$1.15x10^4$
ø140	Push	$7.70x10^2$	$1.54x10^3$	$2.31x10^3$	$3.08x10^3$	$4.62x10^3$	$6.16x10^3$	$7.70x10^3$	$9.24x10^3$	$1.08x10^4$	$1.23x10^4$	$1.39x10^4$	$1.54x10^4$
	Pull	$7.29x10^2$	$1.46x10^3$	$2.19x10^3$	$2.92x10^3$	$4.38x10^3$	$5.84x10^3$	$7.29x10^3$	$8.75x10^3$	$1.02x10^4$	$1.17x10^4$	$1.31x10^4$	$1.46x10^4$
ø160	Push	$1.01x10^3$	$2.01x10^3$	$3.02x10^3$	$4.02x10^3$	$6.03x10^3$	$8.04x10^3$	$1.01x10^4$	$1.21x10^4$	$1.41x10^4$	$1.61x10^4$	$1.81x10^4$	$2.01x10^4$
	Pull	$9.42x10^2$	$1.88x10^3$	$2.83x10^3$	$3.77x10^3$	$5.65x10^3$	$7.54x10^3$	$9.42x10^3$	$1.13x10^4$	$1.32x10^4$	$1.51x10^4$	$1.70x10^4$	$1.88x10^4$
ø180	Push	$1.27x10^3$	$2.54x10^3$	$3.82x10^3$	$5.09x10^3$	$7.63x10^3$	$1.02x10^4$	$1.27x10^4$	$1.53x10^4$	$1.78x10^4$	$2.04x10^4$	$2.29x10^4$	$2.54x10^4$
	Pull	$1.19x10^3$	$2.39x10^3$	$3.58x10^3$	$4.77x10^3$	$7.16x10^3$	$9.54x10^3$	$1.19x10^4$	$1.43x10^4$	$1.67x10^4$	$1.91x10^4$	$2.15x10^4$	$2.39x10^4$
ø200	Push	$1.57x10^3$	$3.14x10^3$	$4.71x10^3$	$6.28x10^3$	$9.42x10^3$	$1.26x10^4$	$1.57x10^4$	$1.88x10^4$	$2.20x10^4$	$2.51x10^4$	$2.83x10^4$	$3.14x10^4$
	Pull	$1.47x10^3$	$2.95x10^3$	$4.42x10^3$	$5.89x10^3$	$8.84x10^3$	$1.18x10^4$	$1.47x10^4$	$1.77x10^4$	$2.06x10^4$	$2.36x10^4$	$2.65x10^4$	$2.95x10^4$
ø250	Push	$2.45x10^3$	$4.91x10^3$	$7.36x10^3$	$9.82x10^3$	$1.47x10^4$	$1.96x10^4$	$2.45x10^4$	$2.95x10^4$	$3.44x10^4$	$3.93x10^4$	$4.42x10^4$	$4.91x10^4$
	Pull	$2.31x10^3$	$4.63x10^3$	$6.94x10^3$	$9.25x10^3$	$1.39x10^4$	$1.85x10^4$	$2.31x10^4$	$2.78x10^4$	$3.24x10^4$	$3.70x10^4$	$4.16x10^4$	$4.63x10^4$

Internal structure and parts list

● Standard
SCS2-(L)(N)

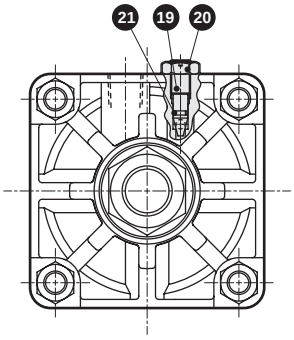

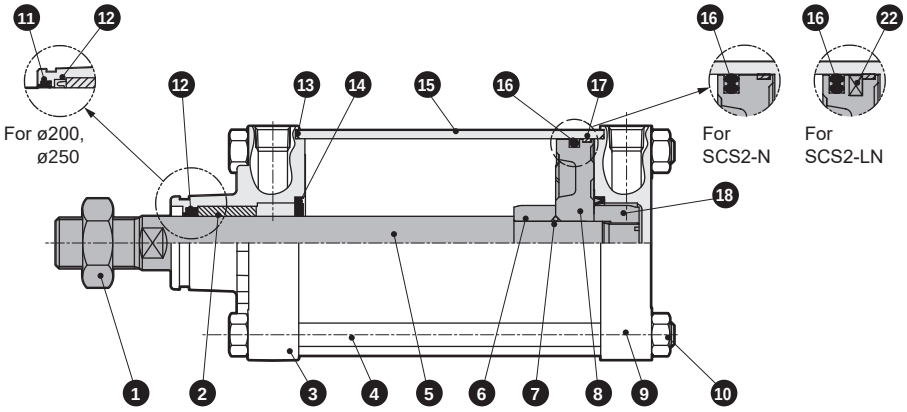

Note: 14, 19, 20 and 21 are not required for the type without cushion.

No.	Part name	Material	Remarks	No.	Part name	Material	Remarks
1	Hexagon nut	Steel	Zinc chromate	13	Cylinder gasket	Nitrile rubber	
2	Bush	Iron-copper oil-impregnated bearing alloy		14	Cushion packing	Nitrile rubber/steel	
3	Rod cover	Aluminum alloy casting	Chromate	15	Cylinder tube	Aluminum alloy	Hard alumite
4	Tie rod	Steel	Zinc chromate	16	Piston packing	Nitrile rubber	
5	Piston rod	Steel	Industrial chrome plating	17	Wear ring	Polyacetal resin	Fiber-reinforced phenolic resin (ø250)
6	Cushion ring A	Steel	Zinc chromate	18	Cushion ring B	Steel	Zinc chromate
7	Piston gasket	Nitrile rubber		19	Cushion needle	Copper alloy (ø125 to ø180)	
8	Piston	Aluminum alloy casting				Steel (ø200, 250)	Zinc chromate
9	Head cover	Aluminum alloy casting	Chromate	20	Hexagon nut	Steel	Zinc chromate
10	Hexagon nut	Steel	Zinc chromate	21	Needle gasket	Nitrile rubber	
11	Dust wiper	Nitrile rubber	ø200 and ø250 only	22	Magnet	Rubber	SCS2-LN only
12	Rod packing	Nitrile rubber					

Repair parts list

Bore size (mm)	SCS2 (lubrication) Kit No.	SCS2-(L)N (no-lubrication) Kit No.	Repair parts No.
ø125	SCS2-125K	SCS2-N-125K	12 13 14 16 17 21
ø140	SCS2-140K	SCS2-N-140K	
ø160	SCS2-160K	SCS2-N-160K	
ø180	SCS2-180K	SCS2-N-180K	
ø200	SCS2-200K	SCS2-N-200K	11 12 13 14 16 17 21
ø250	SCS2-250K	SCS2-N-250K	

*1: Of the no-lubrication repair parts, the piston packing is different from that of the lubrication.

Mounting bracket material

Mounting	Material	Remarks
LB	Steel	Paint
FA,FB	Steel	Paint
CA,CB	Cast iron	Paint
TA,TB,TC	Cast iron	Paint

SCP*3
CMK2
CMA2
SCM
SCG
SCA2
SCS2
CKV2
CAV2/COVP/N2
SSD2
SSG
SSD
CAT
MDC2
MVC
SMG
MSD/MSDG
FC*
STK
SRL3
SRG3
SRM3
SRT3
MRL2
MRG2
SM-25
ShkAbs
FJ
FK
Spd Contr
Ending

Dimensions

● Basic (00)

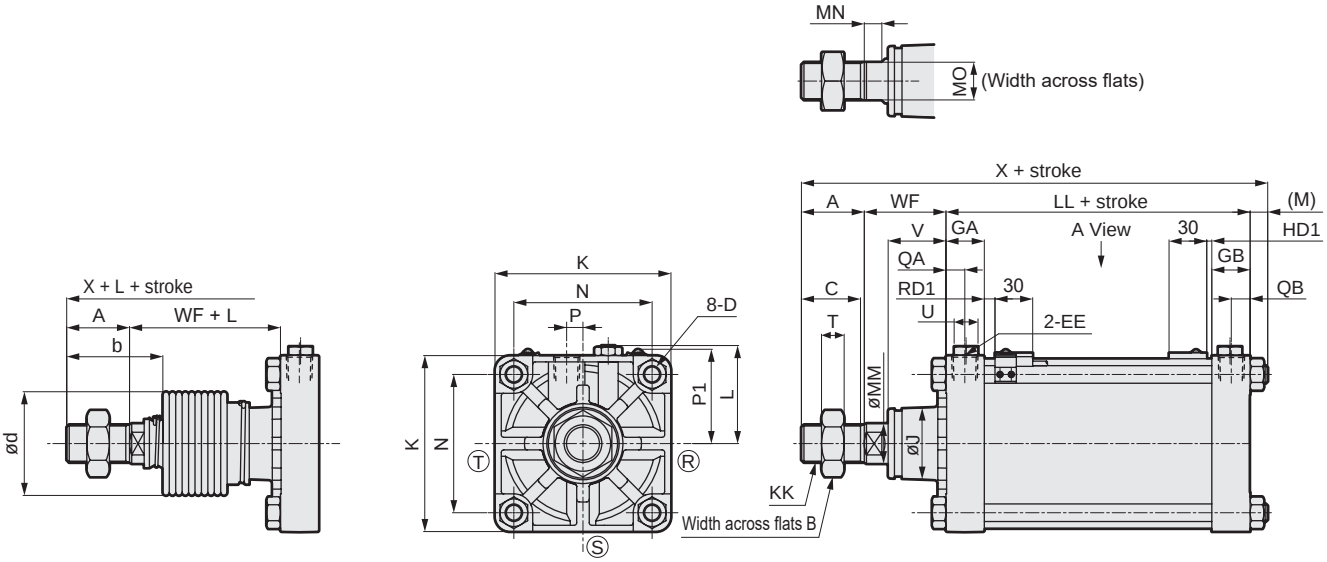

[With bellows]

● 2-color LED with strong magnetic field proof switch

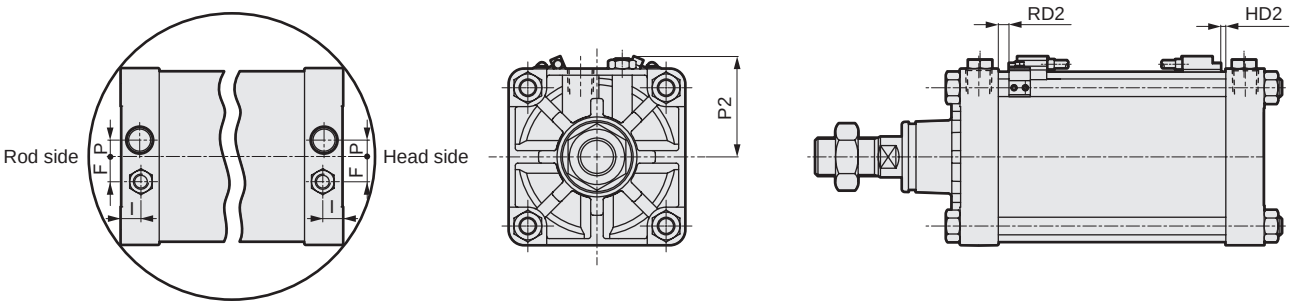

Port position diagram (A View)

RD: Rod side max. sensitivity position
HD: Head side max. sensitivity position

*1 : Ⓡ, Ⓢ and Ⓣ indicate the cushion needle position.
*2 : L dimensions below decimal point are rounded up.
*3 : For the dimensions of the accessories, refer to page 639.

Code	Basic (00) Basic dimensions																					
Bore size (mm)	A	B	C	D	EE	GA	GB	F	I	J	K	KK	L	LL	M	MM	MN	MO	N	P	QA	QB
ø125	50	46	47	M14x1.5	Rc1/2	30.5	30.5	20	16	57	140	M30x1.5	78 to 82	92	13.5	32	15	27	110	13	15	15
ø140	50	46	47	M14x1.5	Rc3/4	34.5	34.5	20	20	57	157	M30x1.5	86.5 to 91	103	13.5	32	15	27	124	15	17	17
ø160	56	55	53	M16x1.5	Rc3/4	34.5	34.5	24	20	62	177	M36x1.5	96.5 to 101	106	15.5	40	15	36	142	15	17	17
ø180	63	60	60	M18x1.5	Rc3/4	34.5	34.5	24	20	68	200	M40x1.5	108 to 112	110	17.5	45	17	41	160	15	17	17
ø200	72	70	69	M20x1.5	Rc3/4	37.5	37.5	24	20.5	75	220	M45x1.5	120.5 to 129	123	18.5	50	20	46	175	20	18	18
ø250	88	85	84	M24x1.5	Rc1	42.5	42.5	24	20.5	93	274	M56x2	147.5 to 156	141	21.5	60	22	55	216	22	21	21

Code						With bellows			With switch		T0, T5, T2, T3		T2W, T3W		T2Y, T3Y, T2YD, T1, T2J		T8	
Bore size (mm)	T	U	V	WF	X	b	d	L	P1	P2	RD1	HD1	RD1	HD1	RD2	HD2	RD2	HD2
ø125	18	19	45.5	65	220.5	74	75	(Stroke/4.55) + 11	76	80	8.5	4.0	10.5	5.5	7.5	2.5	2.5	0.0
ø140	18	19	45.5	67	233.5	74	75	(Stroke/4.55) + 9	82	86	8.5	7.0	10.5	8.5	7.5	5.5	2.5	0.5
ø160	21	19	48	71	248.5	82	82	(Stroke/5.15) + 9	90	95	10.5	8.0	12.5	10.0	9.5	7.0	4.5	1.5
ø180	24	19	53	78	268.5	91	91	(Stroke/5.15) + 9	98	103	13.0	9.5	14.5	11.5	11.5	8.5	6.5	3.5
ø200	27	24	60	88	301.5	102	95	(Stroke/5.30) + 9	106	111	17.5	13.0	19.0	15.0	16.0	12.0	11.0	7.0
ø250	34	24	64	94	344.5	120	120	(Stroke/6.40) + 9	126	130	18.5	19.0	20.5	20.5	17.5	17.5	12.5	12.5

Dimensions

● Axial foot (LB)

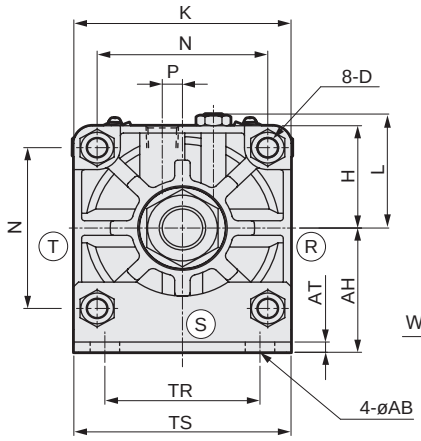

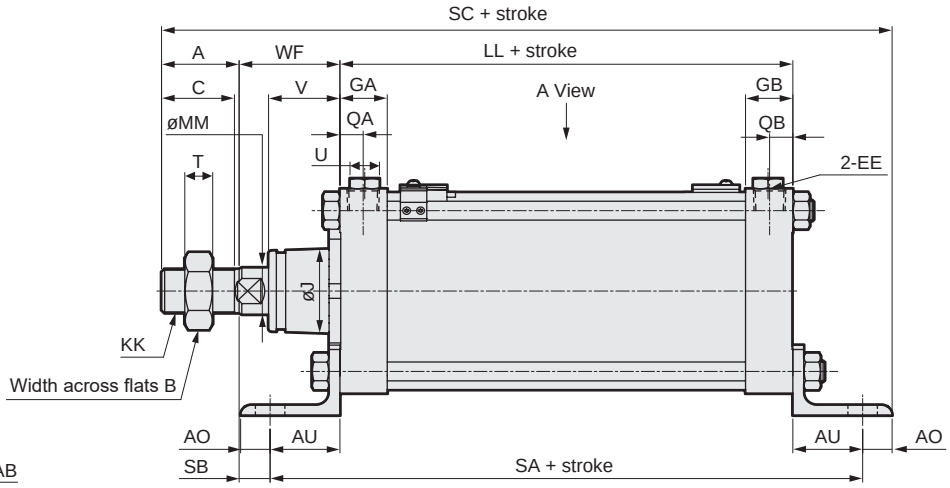

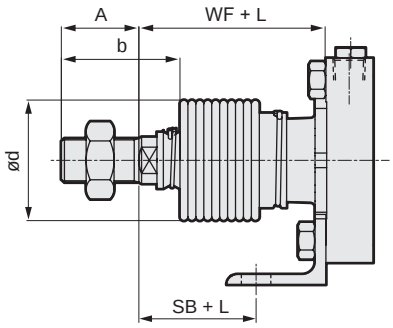

[With bellows]

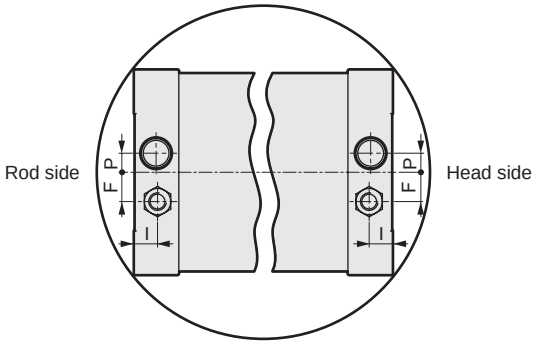

Port position diagram (A View)

*1 : Refer to page 630 for switch dimensions with switch.
*2 : Ⓡ, Ⓢ and Ⓣ indicate the cushion needle position.
*3 : L dimensions below decimal point are rounded up.
*4 : For the dimensions of the accessories, refer to page 639.

Code	Axial foot (LB) Basic dimensions																			
Bore size (mm)	A	AB	AH	AT	AO	AU	B	C	D	EE	GA	GB	F	I	H	J	K	KK	L	LL
ø125	50	19	85	7	19	45	46	47	M14x1.5	Rc1/2	30.5	30.5	20	16	70	57	140	M30x1.5	78 to 82	92
ø140	50	19	100	8	20	50	46	47	M14x1.5	Rc3/4	34.5	34.5	20	20	78.5	57	157	M30x1.5	86.5 to 91	103
ø160	56	19	106	10	20	53	55	53	M16x1.5	Rc3/4	34.5	34.5	24	20	88.5	62	177	M36x1.5	96.5 to 101	106
ø180	63	24	125	10	27	60	60	60	M18x1.5	Rc3/4	34.5	34.5	24	20	100	68	200	M40x1.5	108 to 112	110
ø200	72	24	132	12	27	62	70	69	M20x1.5	Rc3/4	37.5	37.5	24	20.5	110	75	220	M45x1.5	120.5 to 129	123
ø250	88	29	160	12	28	70	85	84	M24x1.5	Rc1	42.5	42.5	24	20.5	137	93	274	M56x2	147.5 to 156	141

Code																	With bellows		
Bore size (mm)	MM	MN	MO	N	P	QA	QB	SA	SB	SC	T	TR	TS	U	V	WF	b	d	L
ø125	32	15	27	110	13	15	15	182	20	271	18	100	140	19	45.5	65	74	75	(Stroke/4.55) + 11
ø140	32	15	27	124	15	17	17	203	17	290	18	112	157	19	45.5	67	74	75	(Stroke/4.55) + 9
ø160	40	16	36	142	15	17	17	212	18	306	21	118	177	19	48	71	82	80	(Stroke/5.15) + 9
ø180	45	18	41	160	15	17	17	230	18	338	24	132	200	19	53	78	91	90	(Stroke/5.15) + 9
ø200	50	20	46	175	20	18	18	247	26	372	27	150	220	24	60	88	102	95	(Stroke/5.30) + 9
ø250	60	22	55	216	22	21	21	281	24	421	34	180	274	24	64	94	120	120	(Stroke/6.40) + 9

SCP*3
CMK2
CMA2
SCM
SCG
SCA2
SCS2
CKV2
CAV2/ COVP/N2
SSD2
SSG
SSD
CAT
MDC2
MVC
SMG
MSD/ MSDG
FC*
STK
SRL3
SRG3
SRM3
SRT3
MRL2
MRG2
SM-25
ShkAbs
FJ
FK
Spd Contr
Ending

Dimensions

● Rod side flange (FA)

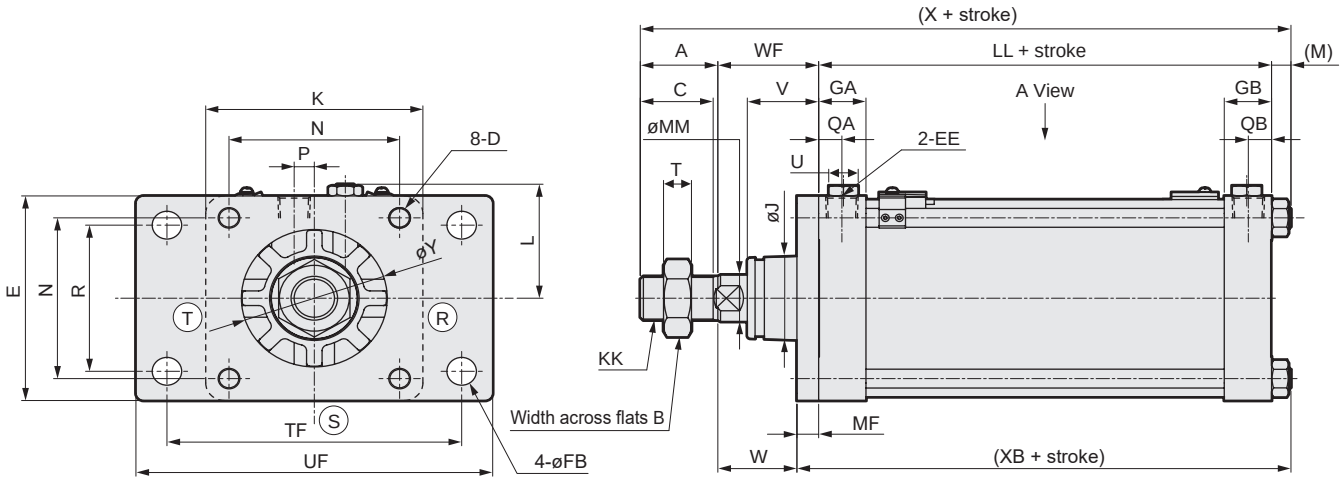

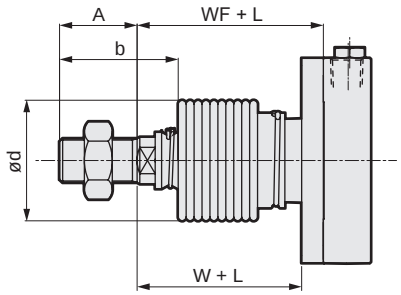

[With bellows]

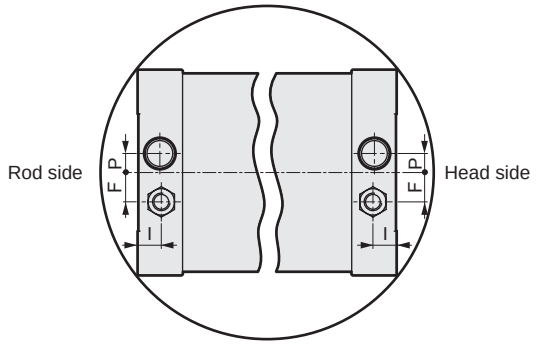

Port position diagram (A View)

*1 : Refer to page 630 for switch dimensions with switch.
*2 : Ⓡ, Ⓢ and Ⓣ indicate the cushion needle position.
*3 : L dimensions below decimal point are rounded up.
*4 : For the dimensions of the accessories, refer to page 639.

Code	Rod side flange (FA) Basic dimensions																		
Bore size (mm)	A	B	C	D	E	EE	FB	GA	GB	F	I	J	K	KK	L	LL	M	MF	MM
ø125	50	46	47	M14x1.5	140	Rc1/2	19	30.5	30.5	20	16	57	140	M30x1.5	78 to 82	92	11	14	32
ø140	50	46	47	M14x1.5	157	Rc3/4	19	34.5	34.5	20	20	57	157	M30x1.5	86.5 to 91	103	11	19	32
ø160	56	55	53	M16x1.5	177	Rc3/4	19	34.5	34.5	24	20	62	177	M36x1.5	96.5 to 101	106	13	19	40
ø180	63	60	60	M18x1.5	200	Rc3/4	24	34.5	34.5	24	20	68	200	M40x1.5	108 to 112	110	15	25	45
ø200	72	70	69	M20x1.5	220	Rc3/4	24	37.5	37.5	24	20.5	75	220	M45x1.5	120.5 to 129	123	16	25	50
ø250	88	85	84	M24x1.5	274	Rc1	29	42.5	42.5	24	20.5	93	274	M56x2	147.5 to 156	141	19	30	60

Code																With bellows		
Bore size (mm)	N	QA	QB	P	R	T	TF	UF	U	V	W	WF	X	XB	Y	b	d	L
ø125	110	15	15	13	100	18	190	230	19	45.5	51	65	218	117	94	74	75	(Stroke/4.55) + 11
ø140	124	17	17	15	112	18	212	250	19	45.5	48	67	231	133	94	74	75	(Stroke/4.55) + 9
ø160	142	17	17	15	118	21	236	280	19	48	52	71	246	138	107	82	80	(Stroke/5.15) + 9
ø180	160	17	17	15	132	24	265	310	19	53	53	78	266	150	113	91	90	(Stroke/5.15) + 9
ø200	175	18	18	20	150	27	280	330	24	60	63	88	299	164	131	102	95	(Stroke/5.30) + 9
ø250	216	21	21	22	180	34	355	415	24	64	64	94	342	190	153	120	120	(Stroke/6.40) + 9

Dimensions

● Head side flange (FB)

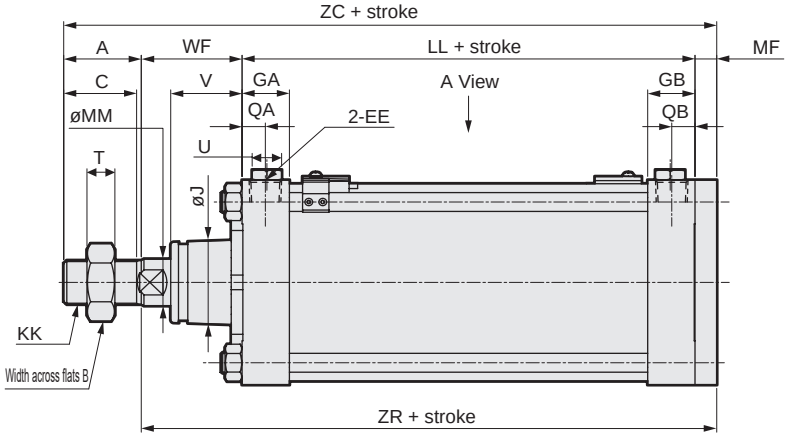

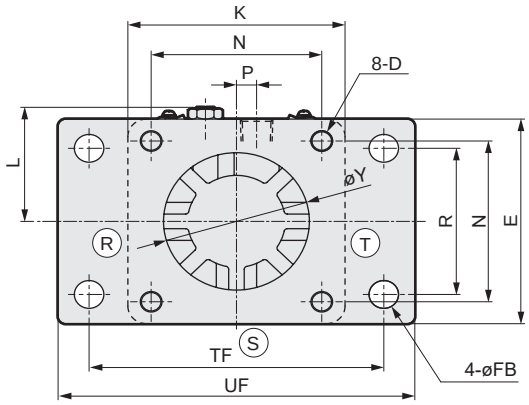

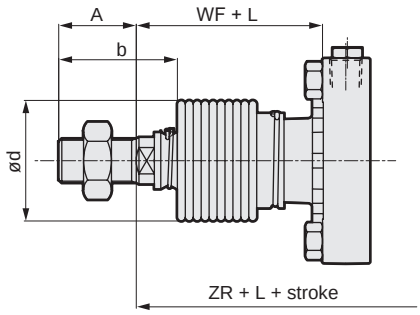

[With bellows]

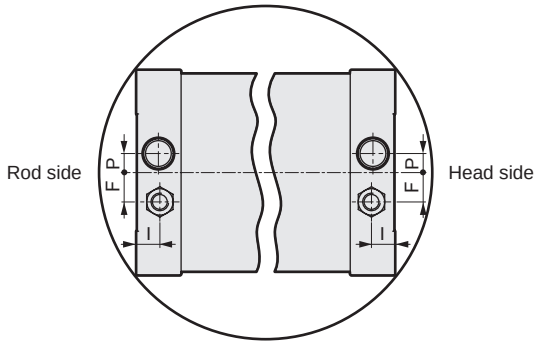

Port position diagram (A View)

*1 : Refer to page 630 for switch dimensions with switch.
*2 : Ⓡ, Ⓢ and Ⓣ indicate the cushion needle position.
*3 : L dimensions below decimal point are rounded up.
*4 : For the dimensions of the accessories, refer to page 639.

Code	Head side flange (FB) Basic dimensions																	
Bore size (mm)	A	B	C	D	E	EE	FB	GA	GB	F	I	J	K	KK	L	LL	MF	MM
ø125	50	46	47	M14x1.5	140	Rc1/2	19	30.5	30.5	20	16	57	140	M30x1.5	78 to 82	92	14	32
ø140	50	46	47	M14x1.5	157	Rc3/4	19	34.5	34.5	20	20	57	157	M30x1.5	86.5 to 91	103	19	32
ø160	56	55	53	M16x1.5	177	Rc3/4	19	34.5	34.5	24	20	62	177	M36x1.5	96.5 to 101	106	19	40
ø180	63	60	60	M18x1.5	200	Rc3/4	24	34.5	34.5	24	20	68	200	M40x1.5	108 to 112	110	25	45
ø200	72	70	69	M20x1.5	220	Rc3/4	24	37.5	37.5	24	20.5	75	220	M45x1.5	120.5 to 129	123	25	50
ø250	88	85	84	M24x1.5	274	Rc1	29	42.5	42.5	24	20.5	93	274	M56x2	147.5 to 156	141	30	60

Code															With bellows		
Bore size (mm)	N	QA	QB	P	R	T	TF	U	UF	V	WF	Y	ZC	ZR	b	d	L
ø125	110	15	15	13	100	18	190	19	230	45.5	65	94	221	171	74	75	(Stroke/4.55) + 11
ø140	124	17	17	15	112	18	212	19	250	45.5	67	94	239	189	74	75	(Stroke/4.55) + 9
ø160	142	17	17	15	118	21	236	19	280	48	71	107	252	196	82	80	(Stroke/5.15) + 9
ø180	160	17	17	15	132	24	265	19	310	53	78	113	276	213	91	90	(Stroke/5.15) + 9
ø200	175	18	18	20	150	27	280	24	330	60	88	131	308	236	102	95	(Stroke/5.30) + 9
ø250	216	21	21	22	180	34	355	24	415	64	94	153	353	265	120	120	(Stroke/6.40) + 9

SCP*3
CMK2
CMA2
SCM
SCG
SCA2
SCS2
CKV2
CAV2/ COVP/N2
SSD2
SSG
SSD
CAT
MDC2
MVC
SMG
MSD/ MSDG
FC*
STK
SRL3
SRG3
SRM3
SRT3
MRL2
MRG2
SM-25
ShkAbs
FJ
FK
Spd Contr
Ending

Dimensions

● Eye bracket (CA)

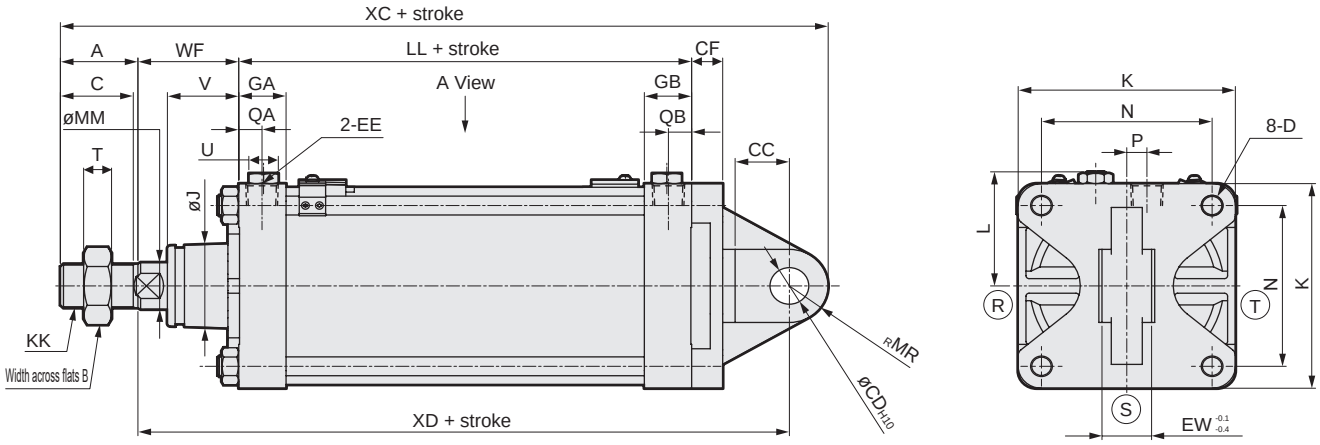

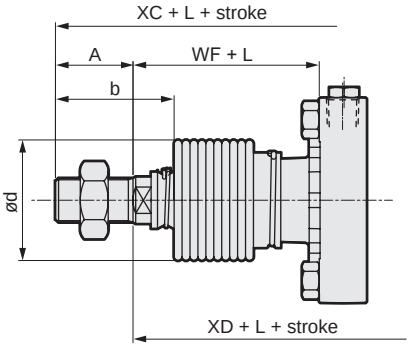

[With bellows]

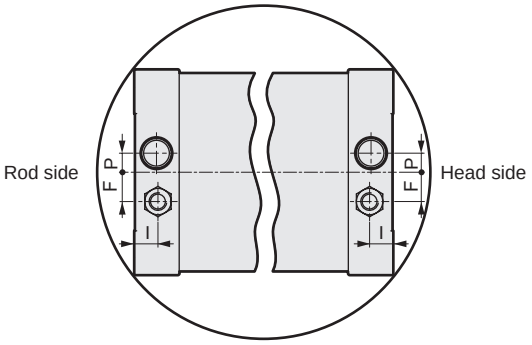

Port position diagram (A View)

*1 : Refer to page 630 for switch dimensions with switch.
*2 : Ⓡ, Ⓢ and Ⓣ indicate the cushion needle position.
*3 : L dimensions below decimal point are rounded up.
*4 : For the dimensions of the accessories, refer to page 639.

Code	Eye bracket (CA) Basic dimensions																
Bore size (mm)	A	B	C	D	CC	CD	CF	EE	EW	GA	GB	F	I	J	K	KK	L
ø125	50	46	47	M14x1.5	35	25	20	Rc1/2	32	30.5	30.5	20	16	57	140	M30x1.5	78 to 82
ø140	50	46	47	M14x1.5	40	28	22	Rc3/4	36	34.5	34.5	20	20	57	157	M30x1.5	86.5 to 91
ø160	56	55	53	M16x1.5	40	32	24	Rc3/4	40	34.5	34.5	24	20	62	177	M36x1.5	96.5 to 101
ø180	63	60	60	M18x1.5	55	40	25	Rc3/4	50	34.5	34.5	24	20	68	200	M40x1.5	108 to 112
ø200	72	70	69	M20x1.5	55	40	30	Rc3/4	50	37.5	37.5	24	20.5	75	220	M45x1.5	120.5 to 129
ø250	88	85	84	M24x1.5	65	50	35	Rc1	63	42.5	42.5	24	20.5	93	274	M56x2	147.5 to 156

Code														With bellows			
Bore size (mm)	LL	MM	MR	N	P	QA	QB	T	U	V	WF	XC	XD	b	d	L	
ø125	92	32	25	110	13	15	15	18	19	45.5	65	295	220	74	75	(Stroke/4.55) + 11	
ø140	103	32	28	124	15	17	17	18	19	45.5	67	323	245	74	75	(Stroke/4.55) + 9	
ø160	106	40	32	142	15	17	17	21	19	48	71	340	252	82	80	(Stroke/5.15) + 9	
ø180	110	45	40	160	15	17	17	24	19	53	78	381	278	91	90	(Stroke/5.15) + 9	
ø200	123	50	40	175	20	18	18	27	24	60	88	413	301	102	95	(Stroke/5.30) + 9	
ø250	141	60	50	216	22	21	21	34	24	64	94	483	345	120	120	(Stroke/6.40) + 9	

Dimensions

● Clevis bracket (CB)

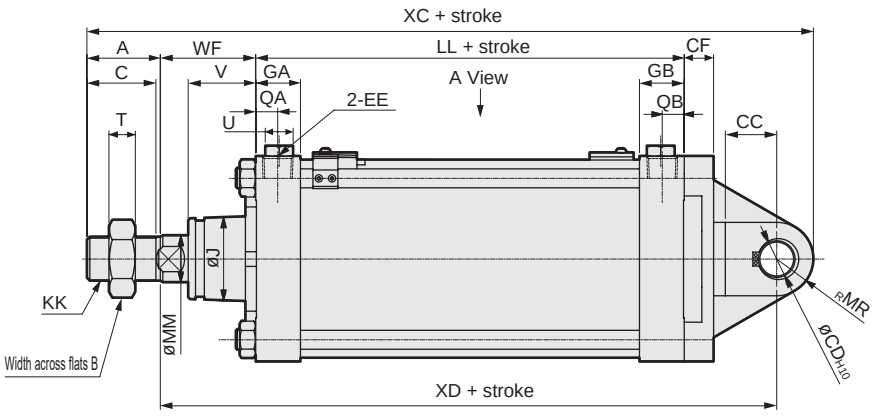

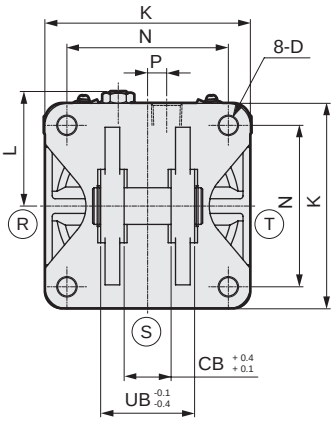

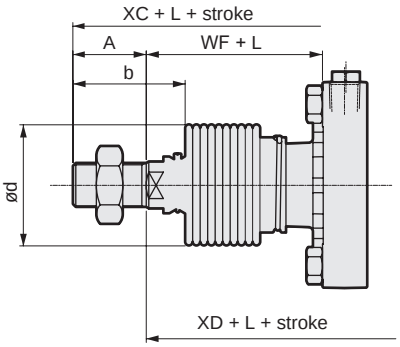

[With bellows]

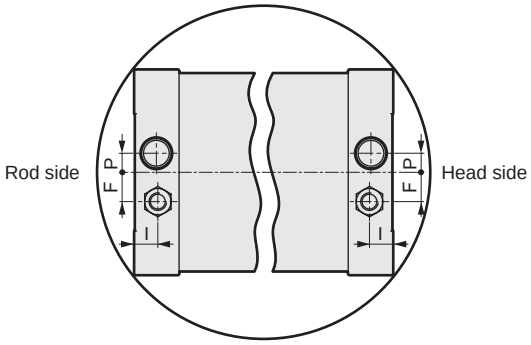

Port position diagram (A View)

*1 : Refer to page 630 for switch dimensions with switch.
*2 : Ⓡ, Ⓢ and Ⓣ indicate the cushion needle position.
*3 : L dimensions below decimal point are rounded up.
*4 : For the dimensions of the accessories, refer to page 639.
*5 : A pin and a snap ring are included.

Code	Clevis bracket (CB) Basic dimensions																
Bore size (mm)	A	B	C	D	CB	CC	CD	CF	EE	GA	GB	F	I	J	K	KK	L
ø125	50	46	47	M14x1.5	32	35	25	20	Rc1/2	30.5	30.5	20	16	57	140	M30x1.5	78 to 82
ø140	50	46	47	M14x1.5	36	40	28	22	Rc3/4	34.5	34.5	20	20	57	157	M30x1.5	86.5 to 91
ø160	56	55	53	M16x1.5	40	40	32	24	Rc3/4	34.5	34.5	24	20	62	177	M36x1.5	96.5 to 101
ø180	63	60	60	M18x1.5	50	55	40	25	Rc3/4	34.5	34.5	24	20	68	200	M40x1.5	108 to 112
ø200	72	70	69	M20x1.5	50	55	40	30	Rc3/4	37.5	37.5	24	20.5	75	220	M45x1.5	120.5 to 129
ø250	88	85	84	M24x1.5	63	65	50	35	Rc1	42.5	42.5	24	20.5	93	274	M56x2	147.5 to 156

Code															With bellows		
Bore size (mm)	LL	MM	MR	N	P	QA	QB	T	U	UB	V	WF	XC	XD	b	d	L
ø125	92	32	25	110	13	15	15	18	19	64	45.5	65	295	220	74	75	(Stroke/4.55) + 11
ø140	103	32	28	124	15	17	17	18	19	72	45.5	67	323	245	74	75	(Stroke/4.55) + 9
ø160	106	40	32	142	15	17	17	21	19	80	48	71	340	252	82	80	(Stroke/5.15) + 9
ø180	110	45	40	160	15	17	17	24	19	100	53	78	381	278	91	90	(Stroke/5.15) + 9
ø200	123	50	40	175	20	18	18	27	24	100	60	88	413	301	102	95	(Stroke/5.30) + 9
ø250	141	60	50	216	22	21	21	34	24	126	64	94	483	345	120	120	(Stroke/6.40) + 9

SCP*3
CMK2
CMA2
SCM
SCG
SCA2
SCS2
CKV2
CAV2/COVP/N2
SSD2
SSG
SSD
CAT
MDC2
MVC
SMG
MSD/MSDG
FC*
STK
SRL3
SRG3
SRM3
SRT3
MRL2
MRG2
SM-25
ShkAbs
FJ
FK
Spd Contr
Ending

Dimensions

● Intermediate trunnion (TC)

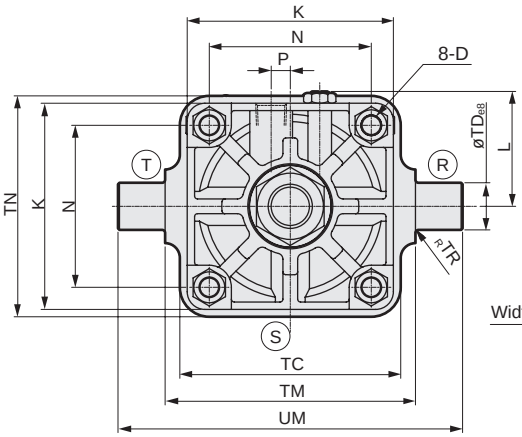

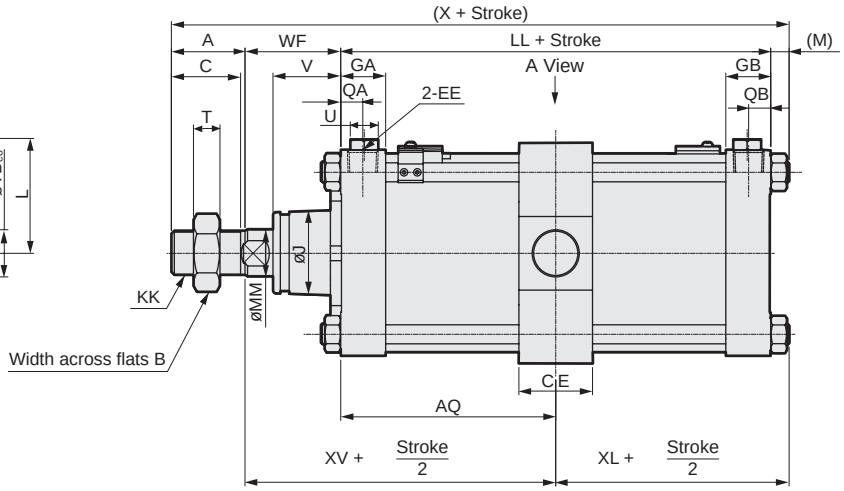

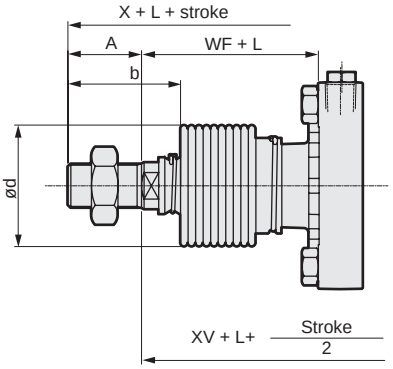

[With bellows]

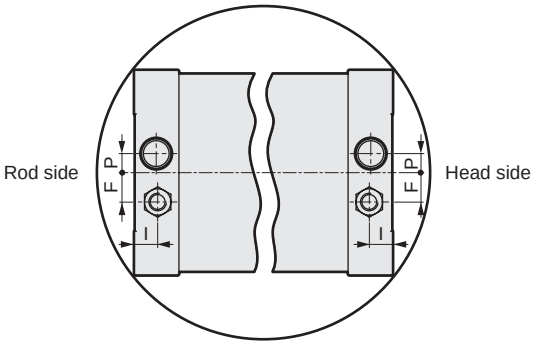

Port position diagram (A View)

*1 : Refer to page 630 for switch dimensions with switch.
*2 : Ⓡ, Ⓢ and Ⓣ indicate the cushion needle position.
*3 : L dimensions below decimal point are rounded up.
*4 : For the dimensions of the accessories, refer to page 639.
*5 : Refer to page 626 for the min. stroke.

Code	Intermediate trunnion (TC) Basic dimensions																	
Bore size (mm)	A	AQ	B	C	CE	D	EE	GA	GB	F	I	J	K	KK	L	LL	M	MM
ø125	50	46 + St/2	46	47	50	M14x1.5	Rc1/2	30.5	30.5	20	16	57	140	M30x1.5	78 to 82	92	11	32
ø140	50	51.5 + St/2	46	47	55	M14x1.5	Rc3/4	34.5	34.5	20	20	57	157	M30x1.5	86.5 to 91	103	11	32
ø160	56	53 + St/2	55	53	60	M16x1.5	Rc3/4	34.5	34.5	24	20	62	177	M36x1.5	96.5 to 101	106	13	40
ø180	63	55 + St/2	60	60	65	M18x1.5	Rc3/4	34.5	34.5	24	20	68	200	M40x1.5	108 to 112	110	15	45
ø200	72	61.5 + St/2	70	69	70	M20x1.5	Rc3/4	37.5	37.5	24	20.5	75	220	M45x1.5	120.5 to 129	123	16	50
ø250	88	70.5 + St/2	85	84	80	M24x1.5	Rc1	42.5	42.5	24	20.5	93	274	M56x2	147.5 to 156	141	19	60

Code																		With bellows		
Bore size (mm)	N	P	QA	QB	T	TC	TD	TM	TN	TR	U	UM	V	WF	X	XV	XL	b	d	L
ø125	110	13	15	15	18	150	32	170	150	2	19	234	45.5	65	218	111	57	74	75	(Stroke/4.55) + 11
ø140	124	15	17	17	18	154	36	190	170	2	19	262	45.5	67	231	118.5	62.5	74	75	(Stroke/4.55) + 9
ø160	142	15	17	17	21	190	40	212	190	2	19	292	48	71	246	124	66	82	80	(Stroke/5.15) + 9
ø180	160	15	17	17	24	210	45	236	210	2	19	326	53	78	266	133	70	91	90	(Stroke/5.15) + 9
ø200	175	20	18	18	27	242	45	265	242	2	24	355	60	88	299	149.5	77.5	102	95	(Stroke/5.30) + 9
ø250	216	22	21	21	34	300	56	335	300	2	24	447	64	94	342	164.5	89.5	120	120	(Stroke/6.40) + 9

Dimensions

● Rod side trunnion (TA)

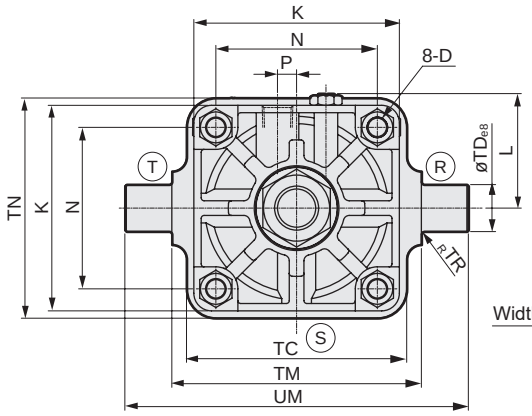

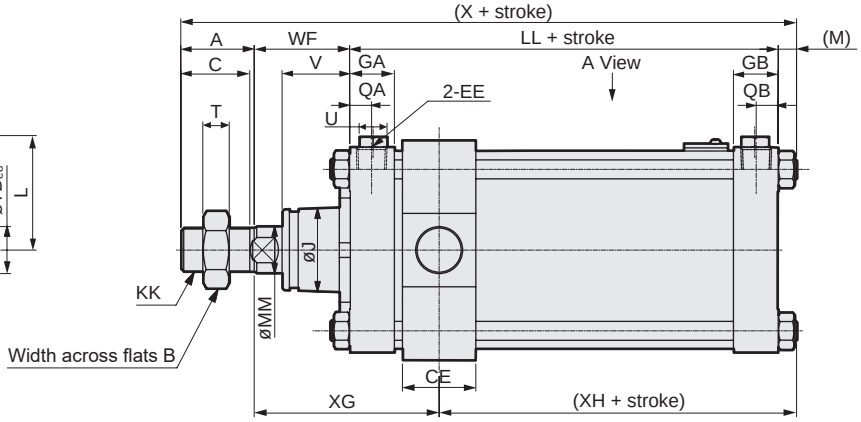

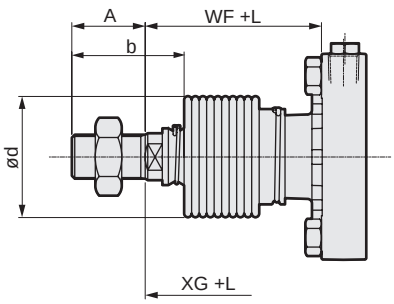

[With bellows]

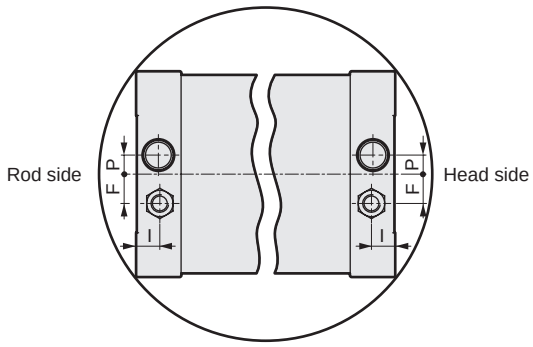

Port position diagram (A View)

*1 : Refer to page 630 for switch dimensions with switch.
*2 : Ⓡ, Ⓢ and Ⓣ indicate the cushion needle position.
*3 : L dimensions below decimal point are rounded up.
*4 : For the dimensions of the accessories, refer to page 639.
*5 : Refer to page 626 for the min. stroke.
*6 : Position cannot be detected at rod side stroke end.

Code	Rod side trunnion (TA) Basic dimensions																
Bore size (mm)	A	B	C	CE	D	EE	GA	GB	F	I	J	K	KK	L	LL	M	MM
ø125	50	46	47	50	M14x1.5	Rc1/2	30.5	30.5	20	16	57	140	M30x1.5	78 to 82	92	11	32
ø140	50	46	47	55	M14x1.5	Rc3/4	34.5	34.5	20	20	57	157	M30x1.5	86.5 to 91	103	11	32
ø160	56	55	53	60	M16x1.5	Rc3/4	34.5	34.5	24	20	62	177	M36x1.5	96.5 to 101	106	13	40
ø180	63	60	60	65	M18x1.5	Rc3/4	34.5	34.5	24	20	68	200	M40x1.5	108 to 112	110	15	45
ø200	72	70	69	70	M20x1.5	Rc3/4	37.5	37.5	24	20.5	75	220	M45x1.5	120.5 to 129	123	16	50
ø250	88	85	84	80	M24x1.5	Rc1	42.5	42.5	24	20.5	93	274	M56x2	147.5 to 156	141	19	60

Code																		With bellows		
Bore size (mm)	N	P	QA	QB	T	TC	TD	TM	TN	TR	U	UM	V	WF	X	XG	XH	b	d	L
ø125	110	13	15	15	18	150	32	170	150	2	19	234	45.5	65	218	126	42	74	75	(Stroke/4.55) + 11
ø140	124	15	17	17	18	154	36	190	170	2	19	262	45.5	67	231	134.5	46.5	74	75	(Stroke/4.55) + 9
ø160	142	15	17	17	21	190	40	212	190	2	19	292	48	71	246	141	49	82	80	(Stroke/5.15) + 9
ø180	160	15	17	17	24	210	45	236	210	2	19	326	53	78	266	150.5	52.5	91	90	(Stroke/5.15) + 9
ø200	175	20	18	18	27	242	45	265	242	2	24	355	60	88	299	168	59	102	95	(Stroke/5.30) + 9
ø250	216	22	21	21	34	300	56	335	300	2	24	447	64	94	342	184	70	120	120	(Stroke/6.40) + 9

SCP*3
CMK2
CMA2
SCM
SCG
SCA2
SCS2
CKV2
CAV2/ COVP/N2
SSD2
SSG
SSD
CAT
MDC2
MVC
SMG
MSD/ MSDG
FC*
STK
SRL3
SRG3
SRM3
SRT3
MRL2
MRG2
SM-25
ShkAbs
FJ
FK
Spd Contr
Ending

Dimensions

● Head side trunnion (TB)

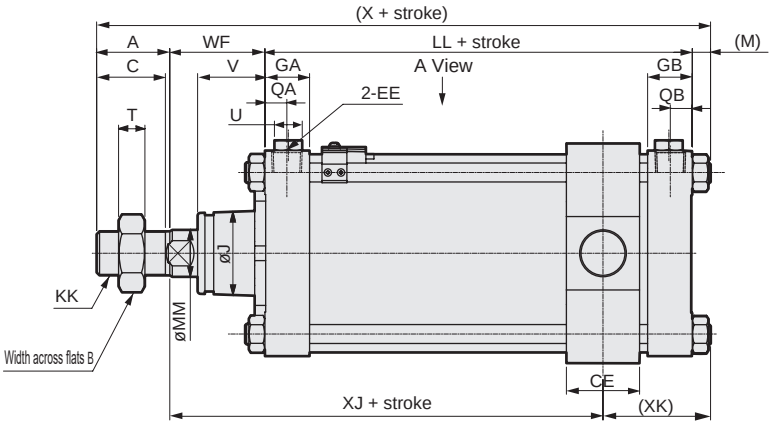

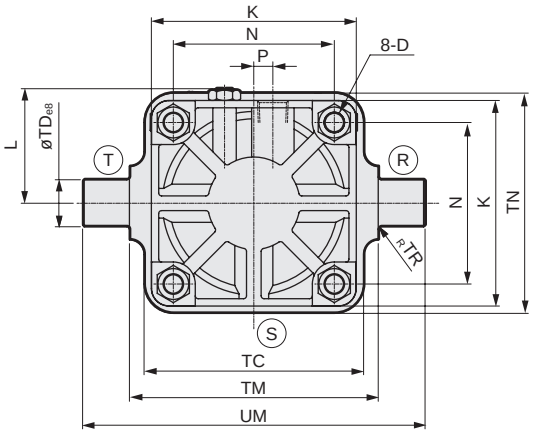

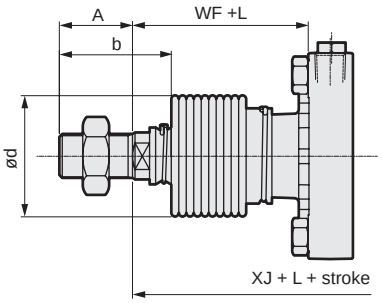

[With bellows]

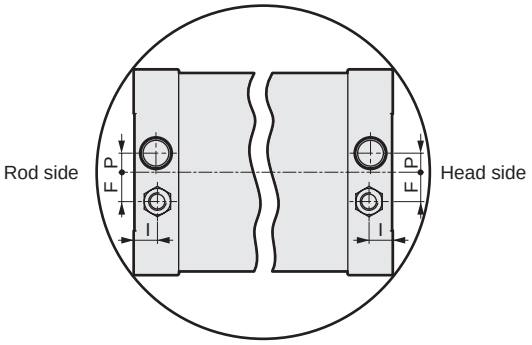

Port position diagram (A View)

*1 : Refer to page 630 for switch dimensions with switch.
*2 : Ⓡ, Ⓢ and Ⓣ indicate the cushion needle position.
*3 : L dimensions below decimal point are rounded up.
*4 : For the dimensions of the accessories, refer to page 639.
*5 : Refer to page 626 for the min. stroke.
*6 : Position cannot be detected at head side stroke end.

Code	Head side trunnion (TB) Basic dimensions																
Bore size (mm)	A	B	C	CE	D	EE	GA	GB	F	I	J	K	KK	L	LL	M	MM
ø125	50	46	47	50	M14x1.5	Rc1/2	30.5	30.5	20	16	57	140	M30x1.5	78 to 82	92	11	32
ø140	50	46	47	55	M14x1.5	Rc3/4	34.5	34.5	20	20	57	157	M30x1.5	86.5 to 91	103	11	32
ø160	56	55	53	60	M16x1.5	Rc3/4	34.5	34.5	24	20	62	177	M36x1.5	96.5 to 101	106	13	40
ø180	63	60	60	65	M18x1.5	Rc3/4	34.5	34.5	24	20	68	200	M40x1.5	108 to 112	110	15	45
ø200	72	70	69	70	M20x1.5	Rc3/4	37.5	37.5	24	20.5	75	220	M45x1.5	120.5 to 129	123	16	50
ø250	88	85	84	80	M24x1.5	Rc1	42.5	42.5	24	20.5	93	274	M56x2	147.5 to 156	141	19	60

Code																		With bellows		
Bore size (mm)	N	P	QA	QB	T	TC	TD	TM	TN	TR	U	UM	V	WF	X	XJ	XK	b	d	L
ø125	110	13	15	15	18	150	32	170	150	2	19	234	45.5	65	218	96	72	74	75	(Stroke/4.55) + 11
ø140	124	15	17	17	18	154	36	190	170	2	19	262	45.5	67	231	102.5	78.5	74	75	(Stroke/4.55) + 9
ø160	142	15	17	17	21	190	40	212	190	2	19	292	48	71	246	107	83	82	80	(Stroke/5.15) + 9
ø180	160	15	17	17	24	210	45	236	210	2	19	326	53	78	266	115.5	87.5	91	90	(Stroke/5.15) + 9
ø200	175	20	18	18	27	242	45	265	242	2	24	355	60	88	299	131	96	102	95	(Stroke/5.30) + 9
ø250	216	22	21	21	34	300	56	335	300	2	24	447	64	94	342	145	109	120	120	(Stroke/6.40) + 9

SCS2 Series common accessory dimensions

● Rod eye for SCS2 (I)

Material: Steel
Painted

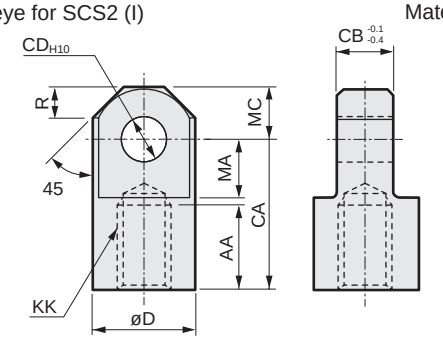

Code / Model No.	AA	CA	CB	CD	D	KK	MA	MC	R	Weight (kg)
SCS2-125-I	50	85	32	25	55	M30x1.5	32	27.5	15.5	1.25
SCS2-140-I	50	90	36	28	60	M30x1.5	35	30	18	1.65
SCS2-160-I	60	105	40	32	70	M36x1.5	40	35	21	2.55
SCS2-180-I	65	115	50	40	85	M40x1.5	47.5	42.5	29	4.20
SCS2-200-I	75	125	50	40	85	M45x1.5	47.5	42.5	29	4.35
SCS2-250-I	88	150	63	50	105	M56x2	57.5	52.5	36.5	8.05

● Rod clevis for SCS2 (Y)

Material: Cast iron
Painted

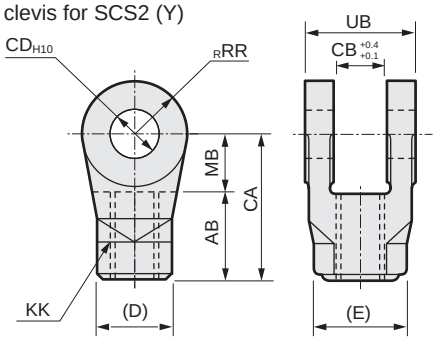

Code / Model No.	AB	CA	CB	CD	D	E	KK	MB	RR	UB	Wt (kg)
SCS2-125-Y	50	85	32	25	46	53.1	M30x1.5	35	27.5	64	1.30
SCS2-140-Y	50	90	36	28	46	53.1	M30x1.5	40	30	72	1.65
SCS2-160-Y	60	105	40	32	55	63.5	M36x1.5	45	35	80	2.55
SCS2-180-Y	65	115	50	40	60	69.3	M40x1.5	50	42.5	100	4.40
SCS2-200-Y	75	125	50	40	70	80.8	M45x1.5	50	42.5	100	4.85
SCS2-250-Y	88	150	63	50	85	98.1	M56x2	62	52.5	126	7.05

Note: A pin and a snap ring are included.

● Eye bracket for SCS2 (B1)

Material: Cast iron
Painted

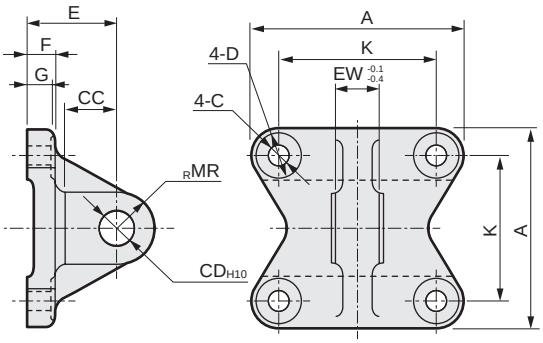

Code / Model No.	A	C	CC	CD	D	E	EW	F	G	K	MR	Weight (kg)
SCS2-125-B1	140	16	35	25	23	63	32	20	18	110	25	2.35
SCS2-140-B1	154	16	40	28	23	75	36	22	20	124	28	3.30
SCS2-160-B1	174	18	40	32	26	75	40	24	22	142	32	4.65
SCS2-180-B1	196	20	55	40	29	90	50	25	23	160	40	6.75
SCS2-200-B1	220	22	55	40	32	90	50	30	28	175	40	9.40
SCS2-250-B1	274	26	65	50	39	110	63	35	33	216	50	16.85

● Pin (P)

Material: Steel
Zinc chromate treatment

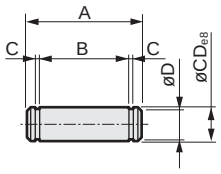

Code / Model No.	A	B	C	CD	D	Applicable snap ring	Wt (kg)	Compatible model
SCS2-125-P	75	66.3	1.35	25	23.9	C type for shaft 25	0.25	SCS2-125
SCS2-140-P	84	74.7	1.65	28	26.6	C type for shaft 28	0.40	SCS2-140
SCS2-160-P	92	82.7	1.65	32	30.3	C type for shaft 32	0.50	SCS2-160
SCS2-180-P	115	103.2	1.9	40	38	C type for shaft 40	1.15	SCS2-180/200
SCS2-250-P	144	129.6	2.2	50	47	C type for shaft 50	2.25	SCS2-250

Note: A pin and a snap ring are included with the clevis, clevis bracket and rod clevis.
The pin includes a snap ring.

● Clevis bracket for SCS2 (B2)

Material: Cast iron
Painted

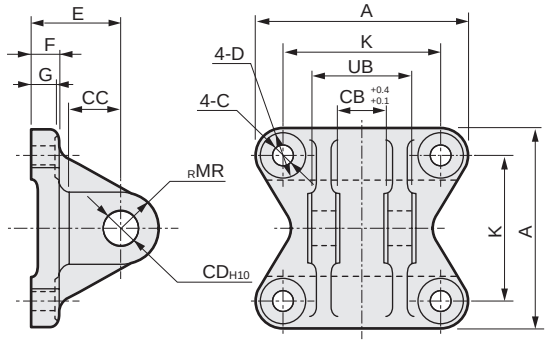

Code / Model No.	A	C	CB	CC	CD	D	E	F	G	K	MR	UB	Weight (kg)
SCS2-125-B2	140	16	32	35	25	23	63	20	18	110	25	64	2.65
SCS2-140-B2	154	16	36	40	28	23	75	22	20	124	28	72	3.85
SCS2-160-B2	174	18	40	40	32	26	75	24	22	142	32	80	5.45
SCS2-180-B2	196	20	50	55	40	29	90	25	23	160	40	100	8.70
SCS2-200-B2	220	22	50	55	40	32	90	30	28	175	40	100	10.55
SCS2-250-B2	274	26	63	65	50	39	110	35	33	216	50	126	19.55

Note: A pin and a snap ring are included.

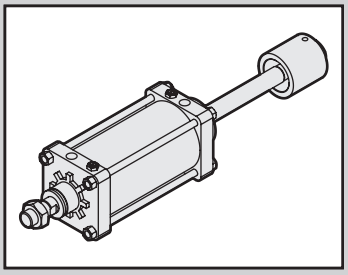

Large bore size cylinder
Double acting/push side stroke adjustable

SCS2-P Series

● Bore size: ø125/ø140/ø160/ø180/ø200/ø250

JIS symbol

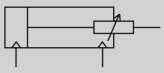

RoHS

* Made-to-order product.

Specifications

Item		SCS2-P (Stroke adjustable)					
Bore size mm		ø125	ø140	ø160	ø180	ø200	ø250
Actuation		Double acting					
Working fluid		Compressed air					
Max. working pressure MPa		1.0 (≈150 psi, 10 bar)					
Min. working pressure MPa		0.1 (≈15 psi, 1 bar)					
Proof pressure MPa		1.6 (≈230 psi, 16 bar)					
Ambient temperature °C		-5 (23°F) to 60 (140°F) (no freezing)					
Port size		Rc1/2	Rc3/4				Rc1
Stroke tolerance mm		$^{+1.0}_{0}$ (to 300), $^{+1.4}_{0}$ (to 1000), $^{+1.8}_{0}$ (to 1200)					
Working piston speed mm/s		20 to 1000 (Operate within the absorbed energy.)					
Cushion		Air cushion (The rod side cushion does not function when adjusting the stroke direction.)					
Effective air cushion length mm		21.6	21.6	21.6	21.6	26.6	26.6
Adjustable stroke range mm		25,50,75,100					
Lubrication		Required (use turbine oil class 1 ISO VG32 for lubrication)					
Allowable absorbed energy J	Cushioned	63.5	91.5	116	152	233	362
	Without cushion	0.371	0.386	0.386	0.958	1.08	2.32
		Without any cushion, this product cannot absorb large energy generated by an external load. We recommend using an external shock absorber.					

Stroke

Bore size (mm)	Standard stroke (mm)	Max. stroke (mm)	Min. stroke (mm)	Trunnion min. stroke (mm)
ø125	50/75/100/150/200/250/300	800	25	25
ø140				25
ø160				27
ø180		900		28
ø200		1,000		28
ø250		1,200		28

*1: The custom stroke is available in 1 mm increments.

*2: If the max. stroke is exceeded, product specifications may not be met, depending on operating conditions. Contact CKD in this case.

Cylinder weight

(Unit: kg)

Item/mounting	Product weight when stroke (S) = 0 mm and stroke (S) adjustment = 25 mm							Additional weight
Bore size (mm)	Basic (00)	Axial foot (LB)	Flange (FA/FB)	Eye bracket (CA)	Clevis bracket (CB)	Trunnion (TA/TB/TC)	Weight/25 mm stroke (S) adjustment	per S = 100 mm
ø125	11.42	12.92	14.72	14.42	14.52	14.82	0.51	2.17
ø140	13.35	15.35	18.75	17.15	17.35	16.55	0.51	2.41
ø160	18.45	21.55	25.35	23.45	23.75	24.85	0.72	3.21
ø180	24.65	29.15	36.65	32.05	32.55	32.75	0.93	4.21
ø200	33.98	39.68	47.68	43.48	43.68	45.78	1.09	5.08
ø250	57.81	66.21	83.71	81.81	76.31	86.51	1.53	7.60

(Example) Product weight of SCS2-P-LB-125B-300-25

- ● Product weight for S = 0 mm stroke ····· 12.92 kg
- ● Additional weight for S = 300 mm stroke ····· 1.54 x $\frac{300}{100}$ = 4.62 kg
- ● Weight for 25 mm stroke adjustment ····· 0.51 kg
- ● Product weight ····· 12.92 + 4.62 + 0.51 = 18.05 kg

Theoretical thrust table

(Unit: N)

Bore size (mm)	Operating direction	Working pressure MPa 0.1	0.15	0.2	0.3	0.4	0.5	0.6	0.7	0.8	0.9	1.0
ø125	Push/Pull	1.15×10^3	1.72×10^3	2.29×10^3	3.44×10^3	4.59×10^3	5.73×10^3	6.88×10^3	8.03×10^3	9.17×10^3	1.03×10^4	1.15×10^4
ø140	Push/Pull	1.46×10^3	2.19×10^3	2.92×10^3	4.38×10^3	5.84×10^3	7.29×10^3	8.75×10^3	1.02×10^4	1.17×10^4	1.31×10^4	1.46×10^4
ø160	Push/Pull	1.88×10^3	2.83×10^3	3.77×10^3	5.65×10^3	7.54×10^3	9.42×10^3	1.13×10^4	1.32×10^4	1.51×10^4	1.70×10^4	1.88×10^4
ø180	Push/Pull	2.39×10^3	3.58×10^3	4.77×10^3	7.16×10^3	9.54×10^3	1.19×10^4	1.43×10^4	1.67×10^4	1.91×10^4	2.15×10^4	2.39×10^4
ø200	Push/Pull	2.95×10^3	4.42×10^3	5.89×10^3	8.84×10^3	1.18×10^4	1.47×10^4	1.77×10^4	2.06×10^4	2.36×10^4	2.65×10^4	2.95×10^4
ø250	Push/Pull	4.63×10^3	6.94×10^3	9.25×10^3	1.39×10^4	1.85×10^4	2.31×10^4	2.78×10^4	3.24×10^4	3.70×10^4	4.16×10^4	4.63×10^4

How to order

No switch (without magnet for switch)

SCS2-P - LB - 125 ( ) B - 50 - 25 - J Y

Ⓐ Mounting *1

Ⓑ Bore size

Ⓒ Port thread

Ⓓ Cushion

Ⓔ Stroke

Ⓕ Adjustable stroke range

Ⓖ Option *2

Ⓗ Accessory *4

Code	Description
Ⓐ Mounting	
00	Basic
LB	Axial foot
FA	Rod side flange
FB	Head side flange
TC	Intermediate trunnion
TA	Rod side trunnion
TB	Head side trunnion
Ⓑ Bore size (mm)	
125	ø125
140	ø140
160	ø160
180	ø180
200	ø200
250	ø250
Ⓒ Port thread	
Blank	Rc thread
N	NPT thread (made-to-order product)
G	G thread (made-to-order product)
Ⓓ Cushion	
B	Both sides cushioned
R	Rod side cushioned
H	Head side cushioned
N	Without cushion

Ⓔ Stroke (mm)

Bore size	Stroke	Custom stroke
ø125 to ø160	**25 to 800**	**In 1 mm increments**
ø180	**25 to 900**	
ø200	**25 to 1000**	
ø250	**25 to 1200**	

Ⓕ Adjustable stroke range (mm)	
25	25
50	50
75	75
100	100

		Max. ambient temp.	Instantaneous ambient temp
Ⓖ Option			
C2	With cushion section check valve		
J	Bellows	100°C	200°C
L	Bellows	250°C	400°C
M	Piston rod material (stainless steel)		
Blank	Cushion needle position (standard)		Standard
R	Cushion needle position R		T R
S	Cushion needle position S		
T	Cushion needle position T		S
P6	Copper and PTFE free (made-to-order product)		

Ⓗ Accessory	
I	Rod eye
Y	Rod clevis (pin and snap ring included)

Precautions for model No. selection

*1: Supporting hole is available custom made for ø125 to 160 only. Contact CKD for details about dimensions.
*2: The instantaneous max. temperature is the temperature when sparks, cutting chips, etc., instantaneously contact the bellows.
*3: Check the figures below for the cushion needle position indication.
*4: "I" and "Y" cannot be selected together.

[Example of model No.]

SCS2-P-LB-125B-50-25-JY

Model: Large bore size cylinder stroke adjustable

- Ⓐ Mounting : Axial foot
- Ⓑ Bore size : ø125 mm
- Ⓒ Port thread : Rc thread
- Ⓓ Cushion : With two-sided air cushion
- Ⓔ Stroke : 50 mm
- Ⓕ Adjustable stroke range : 25 mm
- Ⓖ Option : Bellows material for max. ambient temperature 100°C
- Ⓗ Accessory : Rod clevis

Cushion needle position

(Needle position with the port on the top when viewed from the rod end)

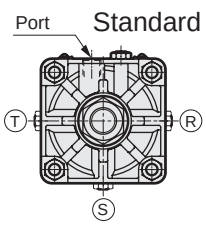

Certified class 2 pressure vessel stroke

Bore size	Stroke
ø200	946 or more
ø250	752 or more

Internal structure and parts list

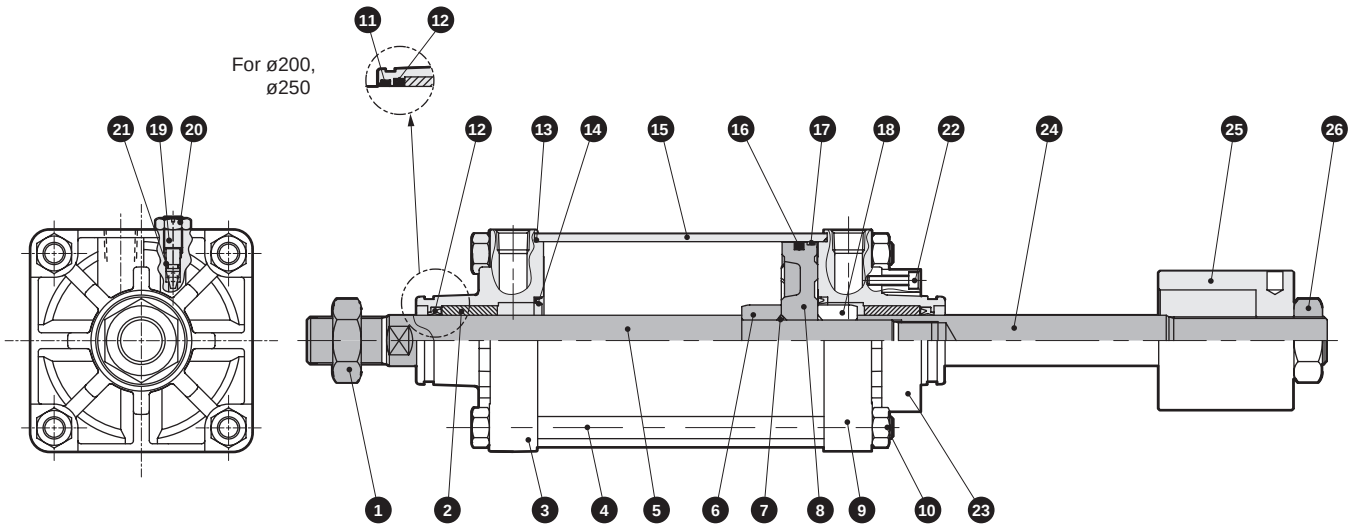

Note: 14, 19, 20 and 21 are not required for the type without cushion.

No.	Part name	Material	Remarks
1	Hexagon nut	Steel	Zinc chromate
2	Bush	Iron-copper oil-impregnated bearing alloy	
3	Rod cover	Aluminum alloy casting	Chromate
4	Tie rod	Steel	Zinc chromate
5	Piston rod A	Steel	Industrial chrome plating
6	Cushion ring A	Steel	Zinc chromate
7	Piston gasket	Nitrile rubber	
8	Piston	Aluminum alloy casting	
9	Head cover	Aluminum alloy casting	Chromate
10	Hexagon nut	Steel	Zinc chromate
11	Dust wiper	Nitrile rubber	ø200 and ø250 only
12	Rod packing	Nitrile rubber	
13	Cylinder gasket	Nitrile rubber	

No.	Part name	Material	Remarks
14	Cushion packing	Nitrile rubber/steel	
15	Cylinder tube	Aluminum alloy	Hard alumite
16	Piston packing	Nitrile rubber	
17	Wear ring	Polyacetal resin	
18	Cushion ring B	Steel	Zinc chromate
19	Cushion needle	Copper alloy (ø125 to ø180)	
		Steel (ø200, 250)	Zinc chromate
20	Hexagon nut	Steel	Zinc chromate
21	Needle gasket	Nitrile rubber	
22	Hexagon socket head cap screw	Steel	Black finish
23	Stopper ring	Steel	Zinc phosphate treatment
24	Piston rod B	Steel	Industrial chrome plating
25	Stopper	Steel	Zinc phosphate treatment
26	Hexagon nut	Steel	Zinc chromate

Repair parts list

Same as SCS2-D Series. Refer to page 652.

Dimensions

● Basic (00)

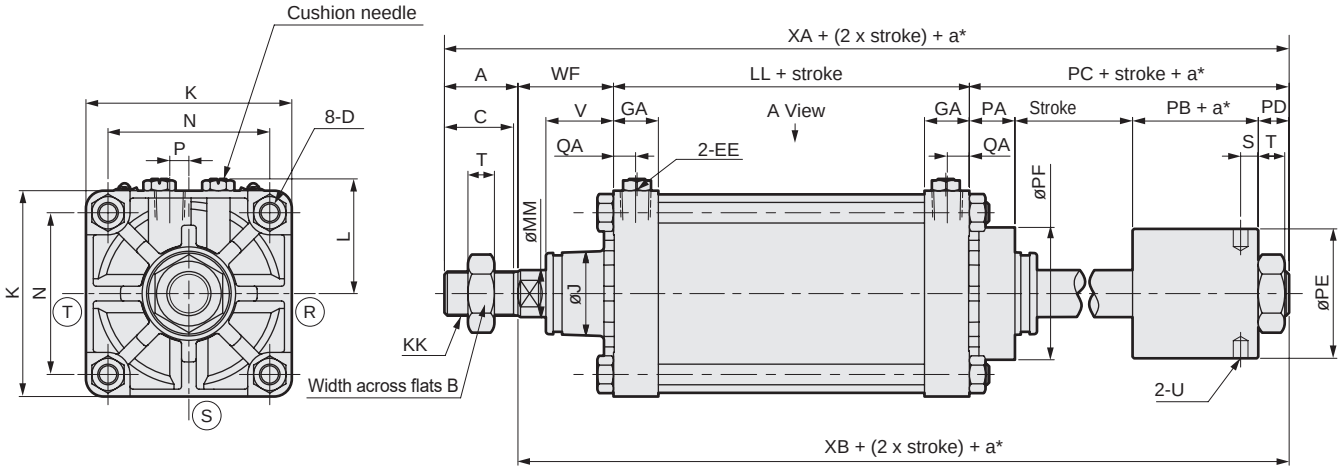

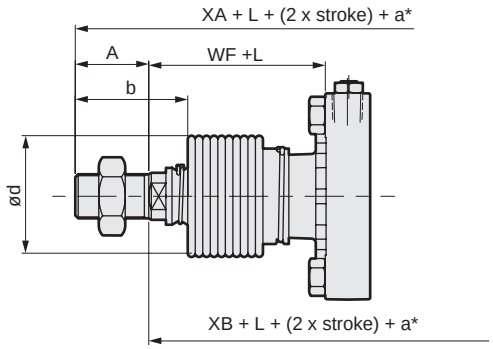

[With bellows]

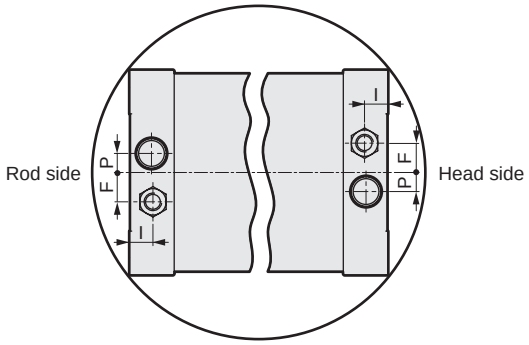

Port position diagram (A View)

*1: Ⓡ, Ⓢ and Ⓣ indicate the cushion needle position.

*: a: Adjustable stroke

Code / Bore size (mm)	A	B	C	D	EE	GA	F	I	J	K	KK	L	LL	MM	P	PA
ø125	50	46	47	M14x1.5	Rc1/2	30.5	20	16	57	140	M30x1.5	78 to 82	92	32	13	31
ø140	50	46	47	M14x1.5	Rc3/4	34.5	20	20	57	157	M30x1.5	86.5 to 91	103	32	15	31
ø160	56	55	53	M16x1.5	Rc3/4	34.5	24	20	62	177	M36x1.5	96.5 to 101	106	40	15	34
ø180	63	60	60	M18x1.5	Rc3/4	34.5	24	20	68	200	M40x1.5	108 to 112	110	45	15	34
ø200	72	70	69	M20x1.5	Rc3/4	37.5	24	20.5	75	220	M45x1.5	120.5 to 129	123	50	20	57
ø250	88	85	84	M24x1.5	Rc1	42.5	24	20.5	93	274	M56x2	147.5 to 156	141	60	22	60

Code / Bore size (mm)	PB	PC	PD	PE	PF	QA	S	T	U	V	WF	XA	XB	With bellows b	With bellows d	With bellows L
ø125	40.5	92.5	21	88	90	15	12	18	ø10 depth 10	45.5	65	299.5	249.5	74	75	(Stroke/4.55) + 11
ø140	40.5	92.5	21	88	90	17	12	18	ø10 depth 10	45.5	67	312.5	262.5	74	75	(Stroke/4.55) + 9
ø160	46	106	26	98	104	17	14.5	21	ø14 depth 15	48	71	339	283	82	80	(Stroke/5.15) + 9
ø180	52	115	29	108	110	17	16	24	ø14 depth 15	53	78	366	303	91	90	(Stroke/5.15) + 9
ø200	48	137	32	120	128	18	18	27	ø14 depth 15	60	88	420	348	102	95	(Stroke/5.30) + 9
ø250	58	157	39	141	150	21	22.5	34	ø14 depth 15	64	94	480	392	120	120	(Stroke/6.40) + 9

* Dimensions of other mounting are the same as those of the double acting SCS2 Series.Refer to pages 631 to 638.
* For the dimensions of the accessories, refer to page 639.

Large bore size cylinder
Double acting/heat resistant

SCS2-T Series

● Bore size: ø125/ø140/ø160/ø180/ø200/ø250

JIS symbol

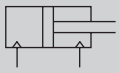

RoHS

Specifications

Item		SCS2-T (heat resistant)					
Bore size	mm	ø125	ø140	ø160	ø180	ø200	ø250
Actuation		Double acting					
Working fluid		Compressed air					
Max. working pressure	MPa	1.0 (≈150 psi, 10 bar)					
Min. working pressure	MPa	0.05 (≈7.3 psi, 0.5 bar)					
Proof pressure	MPa	1.6 (≈230 psi, 16 bar)					
Ambient temperature	°C	5 (41°F) to 120 (248°F) (*1)					
Port size		Rc1/2	Rc3/4				Rc1
Stroke tolerance	mm	$^{+1.0}_{0}$ (to 300), $^{+1.4}_{0}$ (to 1000), $^{+1.8}_{0}$ (to 1200)					
Working piston speed	mm/s	20 to 1000 (Operate within the absorbed energy.)					
Cushion		Air cushion					
Effective air cushion length	mm	21.6	21.6	21.6	21.6	26.6	26.6
Lubrication		Unavailable (*2)					
Allowable absorbed energy	J Cushioned	63.5	91.5	116	152	233	362
	J Without cushion	0.371	0.386	0.386	0.958	1.08	2.32
		Without any cushion, this product cannot absorb large energy generated by an external load. We recommend using an external shock absorber.					

*1: The ambient temperature for the following products is 5 to 100°C.

Bore size	Stroke
ø200	946 or more
ø250	752 or more

Consult CKD for use at ambient temperature 5 to 120°C.

*2: Periodically apply additional heat-resistant grease.
*3: Consult with CKD if localized heating is occurring.

Stroke

Bore size (mm)	Standard stroke (mm)	Max. stroke (mm)	Min. stroke (mm)	Trunnion, min. stroke (mm)
ø125	50/75/100/150/200/250/300	800	1	23
ø140				25
ø160				27
ø180		900		28
ø200		1000		28
ø250		1200		28

*3: The custom stroke is available in 1 mm increments.

*4: If the max. stroke is exceeded, product specifications may not be met, depending on operating conditions. Contact CKD in this case.

Cylinder weight

(Unit: kg)

Item/mounting / Bore size (mm)	Product weight when stroke (S) = 0 mm						Additional weight per S = 100 mm
	Basic (00)	Axial foot (LB)	Flange (FA/FB)	Eye bracket (CA)	Clevis bracket (CB)	Trunnion (TA/TB/TC)	
ø125	7.22	8.72	10.52	10.22	10.32	10.62	1.54
ø140	9.35	11.35	14.75	13.15	13.35	12.55	1.78
ø160	12.35	15.45	19.25	17.35	17.65	18.75	2.22
ø180	16.75	21.25	28.75	24.15	24.65	24.85	2.96
ø200	22.78	28.48	36.48	32.28	32.48	34.58	3.54
ø250	40.51	48.91	66.41	64.51	59.01	69.21	5.38

(Example) Product weight of SCS2-T-LB-125B-300
- ● Product weight for S = 0 mm stroke ····· 8.72 kg
- ● Additional weight for S = 300 mm stroke ····· 1.54 x $\frac{300}{100}$ = 4.62 kg
- ● Product weight ····· 8.72 + 4.62 = 13.34 kg

Theoretical thrust table

(Unit: N)

Bore size (mm)	Operating direction	Working pressure MPa											
		0.05	0.1	0.15	0.2	0.3	0.4	0.5	0.6	0.7	0.8	0.9	1.0
ø125	Push	6.14×10^{2}	1.23×10^{3}	1.84×10^{3}	2.45×10^{3}	3.68×10^{3}	4.91×10^{3}	6.14×10^{3}	7.36×10^{3}	8.59×10^{3}	9.82×10^{3}	1.10×10^{4}	1.23×10^{4}
	Pull	5.73×10^{2}	1.15×10^{3}	1.72×10^{3}	2.29×10^{3}	3.44×10^{3}	4.59×10^{3}	5.73×10^{3}	6.88×10^{3}	8.03×10^{3}	9.17×10^{3}	1.03×10^{4}	1.15×10^{4}
ø140	Push	7.70×10^{2}	1.54×10^{3}	2.31×10^{3}	3.08×10^{3}	4.62×10^{3}	6.16×10^{3}	7.70×10^{3}	9.24×10^{3}	1.08×10^{4}	1.23×10^{4}	1.39×10^{4}	1.54×10^{4}
	Pull	7.29×10^{2}	1.46×10^{3}	2.19×10^{3}	2.92×10^{3}	4.38×10^{3}	5.84×10^{3}	7.29×10^{3}	8.75×10^{3}	1.02×10^{4}	1.17×10^{4}	1.31×10^{4}	1.46×10^{4}
ø160	Push	1.01×10^{3}	2.01×10^{3}	3.02×10^{3}	4.02×10^{3}	6.03×10^{3}	8.04×10^{3}	1.01×10^{4}	1.21×10^{4}	1.41×10^{4}	1.61×10^{4}	1.81×10^{4}	2.01×10^{4}
	Pull	9.42×10^{2}	1.88×10^{3}	2.83×10^{3}	3.77×10^{3}	5.65×10^{3}	7.54×10^{3}	9.42×10^{3}	1.13×10^{4}	1.32×10^{4}	1.51×10^{4}	1.70×10^{4}	1.88×10^{4}
ø180	Push	1.27×10^{3}	2.54×10^{3}	3.82×10^{3}	5.09×10^{3}	7.63×10^{3}	1.02×10^{4}	1.27×10^{4}	1.53×10^{4}	1.78×10^{4}	2.04×10^{4}	2.29×10^{4}	2.54×10^{4}
	Pull	1.19×10^{3}	2.39×10^{3}	3.58×10^{3}	4.77×10^{3}	7.16×10^{3}	9.54×10^{3}	1.19×10^{4}	1.43×10^{4}	1.67×10^{4}	1.91×10^{4}	2.15×10^{4}	2.39×10^{4}
ø200	Push	1.57×10^{3}	3.14×10^{3}	4.71×10^{3}	6.28×10^{3}	9.42×10^{3}	1.26×10^{4}	1.57×10^{4}	1.88×10^{4}	2.20×10^{4}	2.51×10^{4}	2.83×10^{4}	3.14×10^{4}
	Pull	1.47×10^{3}	2.95×10^{3}	4.42×10^{3}	5.89×10^{3}	8.84×10^{3}	1.18×10^{4}	1.47×10^{4}	1.77×10^{4}	2.06×10^{4}	2.36×10^{4}	2.65×10^{4}	2.95×10^{4}
ø250	Push	2.45×10^{3}	4.91×10^{3}	7.36×10^{3}	9.82×10^{3}	1.47×10^{4}	1.96×10^{4}	2.45×10^{4}	2.95×10^{4}	3.44×10^{4}	3.93×10^{4}	4.42×10^{4}	4.91×10^{4}
	Pull	2.31×10^{3}	4.63×10^{3}	6.94×10^{3}	9.25×10^{3}	1.39×10^{4}	1.85×10^{4}	2.31×10^{4}	2.78×10^{4}	3.24×10^{4}	3.70×10^{4}	4.16×10^{4}	4.63×10^{4}

How to order

SCS2-T - LB - 125 ( ) B - 50 - M Y

Ⓐ Mounting *1

Ⓑ Bore size

Ⓒ Port thread

Ⓓ Cushion

Ⓔ Stroke

Ⓕ Option *2

Ⓖ Accessory *4

Code	Description
Ⓐ Mounting	
00	Basic
LB	Axial foot
FA	Rod side flange
FB	Head side flange
CA	Eye bracket
CB	Clevis bracket (pin and snap ring included)
TC	Intermediate trunnion
TA	Rod side trunnion
TB	Head side trunnion
Ⓑ Bore size (mm)	
125	ø125
140	ø140
160	ø160
180	ø180
200	ø200
250	ø250
Ⓒ Port thread	
Blank	Rc thread
N	NPT thread (made-to-order product)
G	G thread (made-to-order product)
Ⓓ Cushion	
B	Both sides cushioned
R	Rod side cushioned
H	Head side cushioned
N	Without cushion

Ⓔ Stroke (mm)

Bore size	Stroke	Custom stroke
ø125 to ø160	**1 to 800**	**In 1 mm increments**
ø180	**1 to 900**	
ø200	**1 to 1000**	
ø250	**1 to 1200**	

Ⓕ Option		
C2	With cushion section check valve	
L	Bellows	Max. ambient temp. 250°C / Instantaneous max. temp 400°C
M	Piston rod material (stainless steel)	
Blank	Cushion needle position (standard)	Standard
R	Cushion needle position R	T R
S	Cushion needle position S	S
T	Cushion needle position T	
Ⓖ Accessory		
I	Rod eye	
Y	Rod clevis (pin and snap ring included)	
B1	Eye bracket	
B2	Clevis bracket (pin and snap ring included)	

⚠ Precautions for model No. selection

*1: Supporting hole is available custom made for ø125 to 160 only. Contact CKD for details about dimensions.
*2: The instantaneous max. temperature is the temperature when sparks, cutting chips, etc., instantaneously contact the bellows.
*3: Check the figures below for the cushion needle position indication.
*4: "I" and "Y" cannot be selected together.

[Example of model No.]

SCS2-T-LB-125 B-50-MY

Model: Large bore size cylinder, double acting/heat resistant

Ⓐ Mounting	: Axial foot
Ⓑ Bore size	: ø125 mm
Ⓒ Port thread	: Rc thread
Ⓓ Cushion	: Both sides cushioned
Ⓔ Stroke	: 50 mm
Ⓕ Option	: Piston rod material change (stainless steel)
Ⓖ Accessory	: Rod clevis

Cushion needle position

(Needle position with the port on the top when viewed from the rod end)

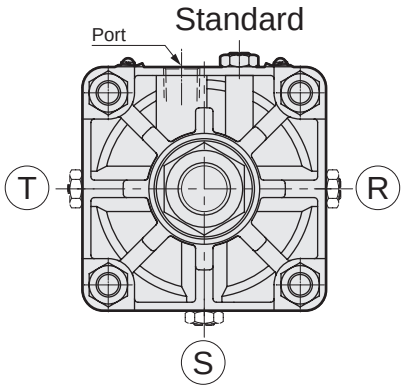

Certified class 2 pressure vessel stroke

Bore size	Stroke
ø160	1948 or more
ø180	1526 or more
ø200	946 or more
ø250	752 or more

Internal structure and parts list

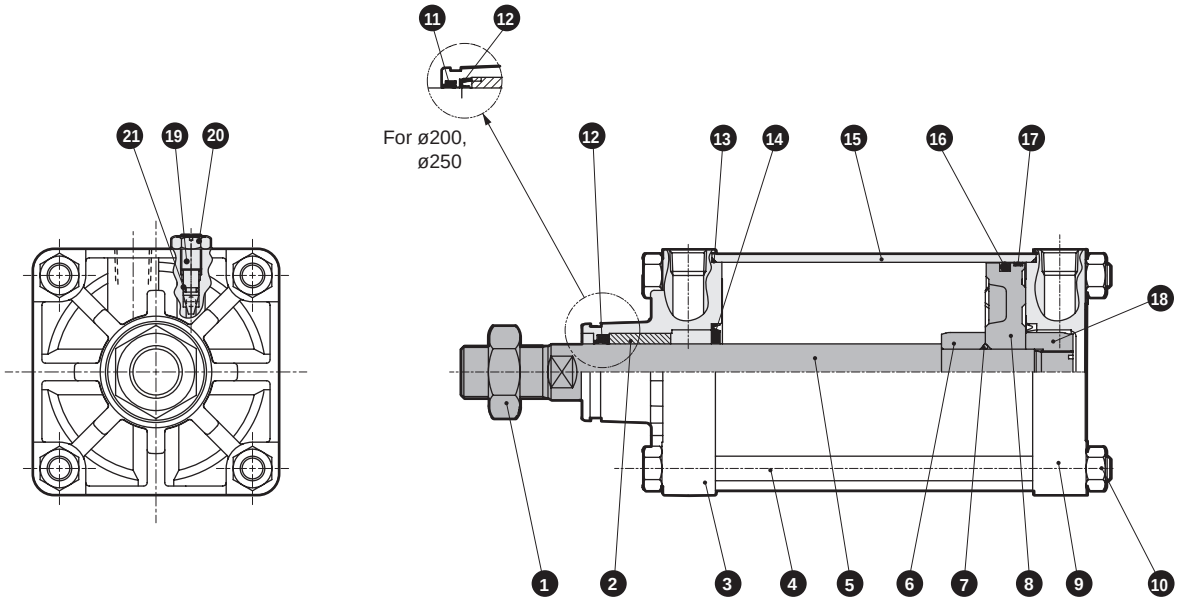

● Note: 14, 19, 20 and 21 are not required for the type without cushion.

No.	Part name	Material	Remarks
1	Hexagon nut	Steel	Zinc chromate
2	Bush	Iron/copper oil-impreg bearing	
3	Rod cover	Aluminum alloy casting	Chromate
4	Tie rod	Steel	Zinc chromate
5	Piston rod	Steel	Industrial chrome plating
6	Cushion ring A	Steel	Zinc chromate
7	Piston gasket	Fluoro rubber	
8	Piston	Aluminum alloy casting	
9	Head cover	Aluminum alloy casting	Chromate
10	Hexagon nut	Steel	Zinc chromate
11	Dust wiper	Fluoro rubber	ø200 and ø250 only
12	Rod packing	Fluoro rubber	

No.	Part name	Material	Remarks
13	Cylinder gasket	Fluoro rubber	
14	Cushion packing	Fluoro rubber/steel	
15	Cylinder tube	Aluminum alloy	Hard alumite
16	Piston packing	Fluoro rubber	
17	Wear ring	Fiber-reinforced phenolic resin	
18	Cushion ring B	Steel	Zinc chromate
19	Cushion needle	Copper alloy (ø125 to ø180)	
		Steel (ø200, 250)	Zinc chromate
20	Hexagon nut	Steel	Zinc chromate
21	Needle gasket	Fluoro rubber	

Repair parts list

Bore size (mm)	Kit No.	Repair parts No.
ø125	SCS2-T-125K	12 13 14 16 17 21
ø140	SCS2-T-140K	
ø160	SCS2-T-160K	
ø180	SCS2-T-180K	
ø200	SCS2-T-200K	11 12 13 14 16 17 21
ø250	SCS2-T-250K	

Dimensions

● Basic (00)

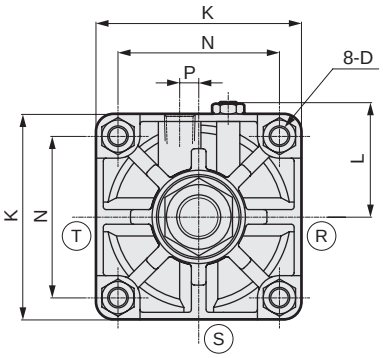

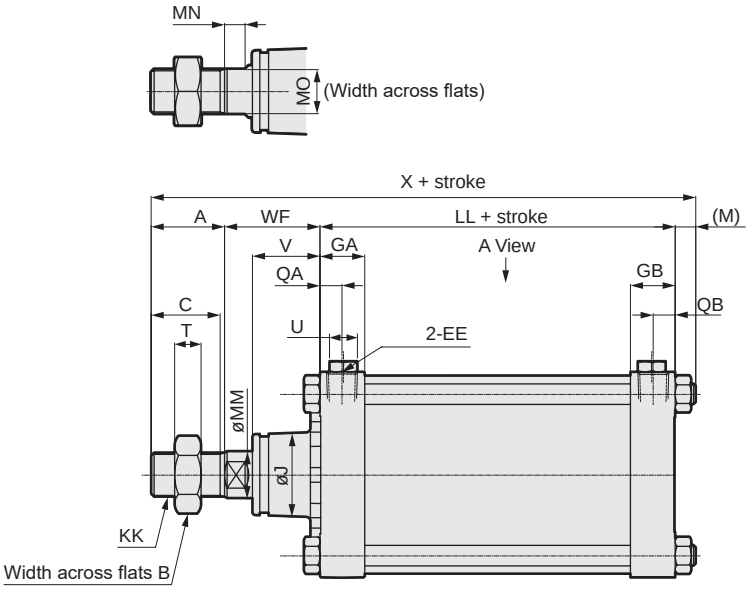

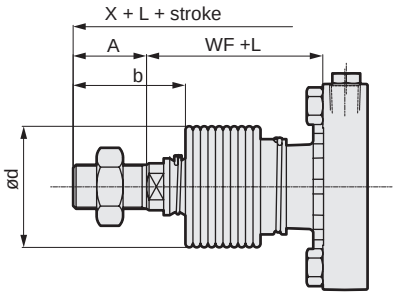

[With bellows]

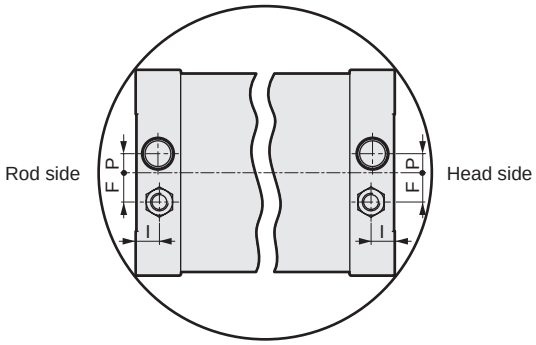

Port position diagram (A View)

*1: Ⓡ, Ⓢ and Ⓣ indicate the cushion needle position.
*2: L dimensions below decimal point are rounded up.

Code	Basic (00) Basic dimensions																
Bore size (mm)	A	B	C	D	EE	GA	GB	F	I	J	K	KK	L	LL	M	MM	MN
ø125	50	46	47	M14x1.5	Rc1/2	30.5	30.5	20	16	57	140	M30x1.5	78 to 82	92	13.5	32	15
ø140	50	46	47	M14x1.5	Rc3/4	34.5	34.5	20	20	57	157	M30x1.5	86.5 to 91	103	13.5	32	15
ø160	56	55	53	M16x1.5	Rc3/4	34.5	34.5	24	20	62	177	M36x1.5	96.5 to 101	106	15.5	40	15
ø180	63	60	60	M18x1.5	Rc3/4	34.5	34.5	24	20	68	200	M40x1.5	108 to 112	110	17.5	45	17
ø200	72	70	69	M20x1.5	Rc3/4	37.5	37.5	24	20.5	75	220	M45x1.5	120.5 to 129	123	18.5	50	20
ø250	88	85	84	M24x1.5	Rc1	42.5	42.5	24	20.5	93	274	M56x2	147.5 to 156	141	21.5	60	22

Code											With bellows		
Bore size (mm)	MO	N	P	QA	QB	T	U	V	WF	X	b	d	L
ø125	27	110	13	15	15	18	19	45.5	65	220.5	74	75	(Stroke/4.55) + 11
ø140	27	124	15	17	17	18	19	45.5	67	233.5	74	75	(Stroke/4.55) + 9
ø160	36	142	15	17	17	21	19	48	71	248.5	82	80	(Stroke/5.15) + 9
ø180	41	160	15	17	17	24	19	53	78	268.5	91	90	(Stroke/5.15) + 9
ø200	46	175	20	18	18	27	24	60	88	301.5	102	95	(Stroke/5.30) + 9
ø250	55	216	22	21	21	34	24	64	94	344.5	120	120	(Stroke/6.40) + 9

* Dimensions of other mounting are the same as those of the double acting SCS2 Series. Refer to pages 631 to 638.
* For the dimensions of the accessories, refer to page 639.

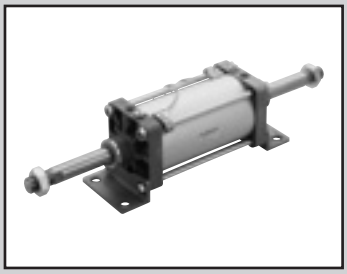

Large bore size cylinder
Double acting/double rod/lubrication/no-lubrication

SCS2-D Series

● Bore size: ø125/ø140/ø160/ø180/ø200/ø250

JIS symbol

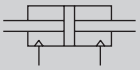

RoHS

* Made-to-order product.

Specifications

Item		SCS2-D/SCS2-LND (double rod)					
Bore size mm		ø125	ø140	ø160	ø180	ø200	ø250
Actuation		Double acting					
Working fluid		Compressed air					
Max. working pressure MPa		1.0 (≈150 psi, 10 bar)					
Min. working pressure MPa		0.1 (≈15 psi, 1 bar)					
Proof pressure MPa		1.6 (≈230 psi, 16 bar)					
Ambient temperature °C		-5 (23°F) to 60 (140°F) (no freezing)					
Port size		Rc1/2	Rc3/4				Rc1
Stroke tolerance mm		$^{+1.0}_{0}$ (to 300), $^{+1.4}_{0}$ (to 1000), $^{+1.8}_{0}$ (to 1200)					
Working piston speed mm/s		20 to 1000 (Operate within the absorbed energy.)					
Cushion		Air cushion					
Effective air cushion length mm		21.6	21.6	21.6	21.6	26.6	26.6
Lubrication		SCS-D: Required (use turbine oil class 1 ISO VG32 for lubrication)/Not required for SCS-LND					
Allowable absorbed energy J	Cushioned	63.5	91.5	116	152	233	362
	Without cushion	0.371	0.386	0.386	0.958	1.08	2.32
		Without any cushion, this product cannot absorb large energy generated by an external load. We recommend using an external shock absorber.					

Stroke

Bore size (mm)	Standard stroke (mm)	Max. stroke (mm)	Min. stroke (mm)	Trunnion min. stroke (mm)
ø125	50/75/100/150/200/250/300	800	1	23
ø140				25
ø160				27
ø180		900		28
ø200		1,000		28
ø250		1,200		28

*1: The custom stroke is available in 1 mm increments.
*2: If the max. stroke is exceeded, product specifications may not be met, depending on operating conditions. Contact CKD in this case.

Min. stroke with switch

Item / Bore size (mm)		Stroke when mounted on the same surface	Stroke of intermediate supporting hole trunnion	Stroke of rod side supporting hole trunnion	Stroke of head side supporting hole trunnion
Switch	Sketch	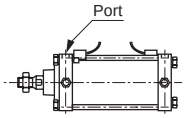	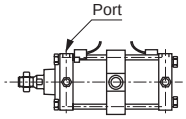	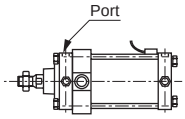 Position cannot be detected at the rod side stroke end.	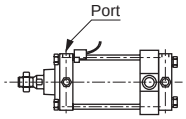 Position cannot be detected at the head side stroke end.
Reed switch (T*)	ø125	20 or more	120 or more	70 or more	
	ø140		125 or more	75 or more	
	ø160		130 or more	80 or more	
	ø180		135 or more	85 or more	
	ø200		140 or more	90 or more	
	ø250		150 or more	100 or more	

Switch specifications

● 1-color/2-color LED/for AC magnetic field proof

Item	2-wire proximity				3-wire proximity				2-wire reed							2-wire proximity
	T1H/ T1V	T2H/T2V/ T2JH/T2JV	T2YH/ T2YV	T2WH/ T2WV	T3H/ T3V	T3PH/ T3PV	T3YH/ T3YV	T3WH/ T3WV	T0H/T0V		T5H/T5V		T8H/T8V			T2YD (*4) T2YDT
Applications	For programmable controller, relay, compact solenoid valve	Dedicated for programmable controller			For programmable controller, relay				For programmable controller, relay		For programmable controller, relay, IC circuit (no indicator lamp), serial connection		For programmable controller, relay			For programmable controller
Output method	-				NPN output	PNP output	NPN output	NPN output	-							
Pwr. supp. V.	-				10 to 28 VDC				-							
Load voltage	85 to 265 VAC	10 to 30 VDC		24 VDC ±10%	30 VDC or less				12/24 VDC	110 VAC	5/12/24 VDC	110 VAC	12/24 VDC	110 VAC	220 VAC	24 VDC ±10%
Load current	5 to 100 mA	5 to 20 mA (*3)			100 mA or less		50 mA or less		5 to 50 mA	7 to 20 mA	50 mA or less	20 mA or less	5 to 50 mA	7 to 20 mA	7 to 10 mA	5 to 20 mA
Indicator	LED (Lit when ON)	LED (Lit when ON)	Red/green LED (Lit when ON)	Red/green LED (Lit when ON)	LED (Lit when ON)	Yellow LED (Lit when ON)	Red/green LED (Lit when ON)	Red/green LED (Lit when ON)	LED (Lit when ON)		No indicator lamp		LED (Lit when ON)			Red/green LED (Lit when ON)
Leakage current	≤ 1 mA at 100 VAC, ≤ 2 mA at 200 VAC	1 mA or less			10 μA or less				0 mA							1 mA or less
Weight g	1 m:33	1 m:18	1 m:33	1 m:18	1 m:18		1 m:33	1 m:18	1 m:18 3 m:49 5 m:80				1 m:33			1 m:61
	3 m:87	3 m:49	3 m:87	3 m:49	3 m:49		3 m:87	3 m:49					3 m:87			3 m:166
	5 m:142	5 m:80	5 m:142	5 m:80	5 m:80		5 m:142	5 m:80					5 m:142			5 m:272

*1 : Refer to Ending Page 1 for detailed switch specifications and dimensions.
*2 : Switches other than the above models, such as switches with connectors, are also available. Refer to Ending Page 1.
*3 : Max. load current: 20 mA at 25°C. The current is lower than 20 mA if the operating ambient temperature around the switch is higher than 25˚C. (5 to 10 mA at 60°C)
*4 : Switch for AC magnetic field (T2YD/T2YDT) cannot be used in DC magnetic field.

Cylinder weight

(Unit: kg)

Item/mounting / Bore size (mm)	Product weight when stroke (S) = 0 mm						Switch weight		Additional weight per S = 100 mm
	Basic (00)	Axial foot (LB)	Flange (FA/FB)	Eye bracket (CA)	Clevis bracket (CB)	Trunnion (TA/TB/TC)	Switch	Mounting bracket	
ø125	9.02	10.52	12.32	12.02	12.12	12.42	Refer to the weight in the switch specifications.	0.028	2.17
ø140	10.95	12.95	16.35	14.75	14.95	14.15		0.030	2.41
ø160	15.05	18.15	21.95	20.05	20.35	21.45		0.034	3.21
ø180	20.15	24.65	32.15	27.55	28.05	28.25		0.038	4.21
ø200	27.68	33.38	41.38	37.18	37.38	39.48		0.040	5.08
ø250	48.51	56.91	74.41	72.51	67.01	77.21		0.045	7.60

(Example) Product weight of SCS2-LND-LB-125B-300-TOH-D
- ● Product weight for S = 0 mm stroke ·····10.52 kg
- ● Additional weight for S = 300 mm stroke·····$2.17 \times \frac{300}{100} = 6.51$ kg
- ● Weight of 2 switches (T0H-D)·····0.018 x 2 = 0.036 kg
- ● Product weight with 2 switch brackets····0.028 x 2 = 0.056 kg
- ● Product weight ·····10.52 + 6.51 + 0.036 + 0.056 = 17.122 kg

Theoretical thrust table

(Unit: N)

Bore size (mm)	Operating direction	Working pressure MPa										
		0.1	0.15	0.2	0.3	0.4	0.5	0.6	0.7	0.8	0.9	1.0
ø125	Push/Pull	1.15×10^3	1.72×10^3	2.29×10^3	3.44×10^3	4.59×10^3	5.73×10^3	6.88×10^3	8.03×10^3	9.17×10^3	1.03×10^4	1.15×10^4
ø140	Push/Pull	1.46×10^3	2.19×10^3	2.92×10^3	4.38×10^3	5.84×10^3	7.29×10^3	8.75×10^3	1.02×10^4	1.17×10^4	1.31×10^4	1.46×10^4
ø160	Push/Pull	1.88×10^3	2.83×10^3	3.77×10^3	5.65×10^3	7.54×10^3	9.42×10^3	1.13×10^4	1.32×10^4	1.51×10^4	1.70×10^4	1.88×10^4
ø180	Push/Pull	2.39×10^3	3.58×10^3	4.77×10^3	7.16×10^3	9.54×10^3	1.19×10^4	1.43×10^4	1.67×10^4	1.91×10^4	2.15×10^4	2.39×10^4
ø200	Push/Pull	2.95×10^3	4.42×10^3	5.89×10^3	8.84×10^3	1.18×10^4	1.47×10^4	1.77×10^4	2.06×10^4	2.36×10^4	2.65×10^4	2.95×10^4
ø250	Push/Pull	4.63×10^3	6.94×10^3	9.25×10^3	1.39×10^4	1.85×10^4	2.31×10^4	2.78×10^4	3.24×10^4	3.70×10^4	4.16×10^4	4.63×10^4

SCP*3
CMK2
CMA2
SCM
SCG
SCA2
SCS2
CKV2
CAV2/ COVP/N2
SSD2
SSG
SSD
CAT
MDC2
MVC
SMG
MSD/ MSDG
FC*
STK
SRL3
SRG3
SRM3
SRT3
MRL2
MRG2
SM-25
ShkAbs
FJ
FK
Spd Contr
Ending

How to order

No switch (lubrication) (without magnet for switch)

SCS2-D — LB - 125 ( ) B - 50 — J I

With switch (no-lubrication) (built-in magnet for switch)

SCS2-LND - LB - 125 ( ) B - 50 - T0H - R - J I

Ⓐ Mounting *1

Ⓑ Bore size

Ⓒ Port thread

Ⓓ Cushion

Ⓔ Stroke *2

Ⓕ Switch model No.

Ⓖ Switch quantity *3

Ⓗ Option *4

*5

Ⓘ Accessory

Code	Description
Ⓐ Mounting	
00	Basic
LB	Axial foot
FA	Rod side flange
FB	Head side flange
TC	Intermediate trunnion
TA	Rod side trunnion
TB	Head side trunnion

Ⓑ Bore size (mm)	
125	ø125
140	ø140
160	ø160
180	ø180
200	ø200
250	ø250

Ⓒ Port thread	
Blank	RC thread
N	NPT thread (made-to-order product)
G	G thread (made-to-order product)

Ⓓ Cushion	
B	Both sides cushioned
R	Rod side cushioned
H	Head side cushioned
N	Without cushion

Ⓔ Stroke (mm)

Bore size	Stroke *2	Custom stroke
ø125 to ø160	**1 to 800**	**In 1 mm increments**
ø180	**1 to 900**	
ø200	**1 to 1000**	
ø250	**1 to 1200**	

Ⓕ Switch model No.

Axial lead wire	Radial lead wire	Contact	Voltage AC	Voltage DC	Indicator	Lead Line
T0H*	**T0V***	Reed	●	●	1-color LED	2-wire
T5H*	**T5V***	Reed	●	●	No indicator lamp	2-wire
T8H*	**T8V***	Reed	●	●	1-color LED	2-wire
T1H*	**T1V***	Proximity	●		1-color LED	2-wire
T2H*	**T2V***	Proximity		●	1-color LED	2-wire
T3H*	**T3V***	Proximity		●	1-color LED	3-wire
T3PH*	**T3PV***	Proximity		●	1-color LED (PNP output)	3-wire
T2WH*	**T2WV***	Proximity		●	2-color LED	2-wire
T2YH*	**T2YV***	Proximity		●	2-color LED	2-wire
T3WH*	**T3WV***	Proximity		●	2-color LED	3-wire
T3YH*	**T3YV***	Proximity		●	2-color LED	3-wire
T2YD*	**-**	Proximity		●	2-color LED	2-wire
T2YDT*	**-**	Proximity		●	2-color LED AC magnetic field	2-wire
T2JH*	**T2JV***	Proximity		●	1-color LED off-delay	2-wire

*** Lead wire length**	
Blank	1 m (standard)
3	3 m (option)
5	5 m (option)

Ⓖ Switch quantity	
R	1 on rod side
H	1 on head side
D	2
T	3
4	4

Ⓗ Option

		Max. ambient temp.	Instantaneous ambient temp
C2	With cushion section check valve		
J	Bellows	100°C	200°C
L	Bellows	250°C	400°C
M	Piston rod material (stainless steel)		

Blank	Cushion needle position (standard)	Standard
R	Cushion needle position R	T R
S	Cushion needle position S	S
T	Cushion needle position T	
P6	Copper and PTFE free (made to order)	

Ⓘ Accessory	
I	Rod eye
Y	Rod clevis (pin and snap ring included)

⚠ Precautions for model No. selection

*1 : Supporting hole is available custom made for ø125 to 160 only. Contact CKD for details about dimensions.
*2 : Refer to page 648 for the min. stroke with switch.
*3 : When selecting TA or TB as mounting, the number of switches is limited to "H" (1 on head side) for TA and TD, and "R" (1 on rod side) for TB.
*4 : The instantaneous max. temperature is the temperature when sparks, cutting chips, etc., instantaneously contact the bellows.
*5 : Refer to page 651 for the cushion needle position indication.

[Example of model No.]

SCS2-LND-LB-125B-50-T0H-R-JY

Model: Large bore size cylinder double acting/double rod, with switch

Ⓐ Mounting	: Axial foot
Ⓑ Bore size	: ø125 mm
Ⓒ Port thread	: Rc thread
Ⓓ Cushion	: Both sides cushioned
Ⓔ Stroke	: 50 mm
Ⓕ Switch model No.	: Reed T0H switch, lead wire 1 m
Ⓖ Switch quantity	: 1 on rod side
Ⓗ Option	: Bellows material for max. ambient temperature 100°C
Ⓘ Accessory	: Rod clevis

How to order switch

● Switch body + mounting bracket set

SCS2-LN - T0H - 125

- T0H: Switch model No. (Item Ⓕ on page 650)
- 125: Bore size (Item Ⓑ on page 650)

● Switch body only

SW - T0H

- T0H: Switch model No. (Item Ⓕ on page 650)

● Mounting bracket set

SCS2-LN - TS - 125

- 125: Bore size (Item Ⓑ on page 650)
- TS: Mounting bracket

Mounting bracket	
TS	T-switch
T	T2YD switch

Cushion needle position (needle position from rod direction with the port on the top side)

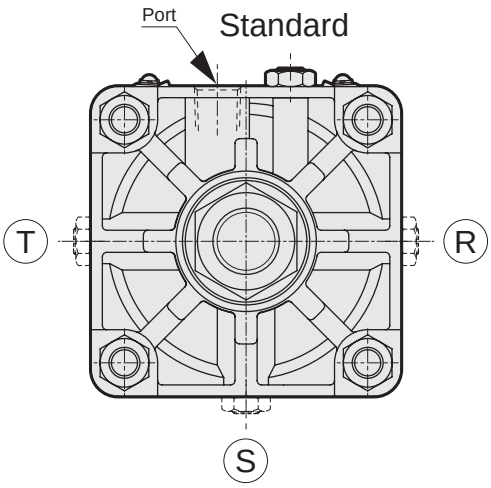

Certified class 2 pressure vessel stroke

Bore size	Stroke
ø200	946 or more
ø250	752 or more

Internal structure and parts list

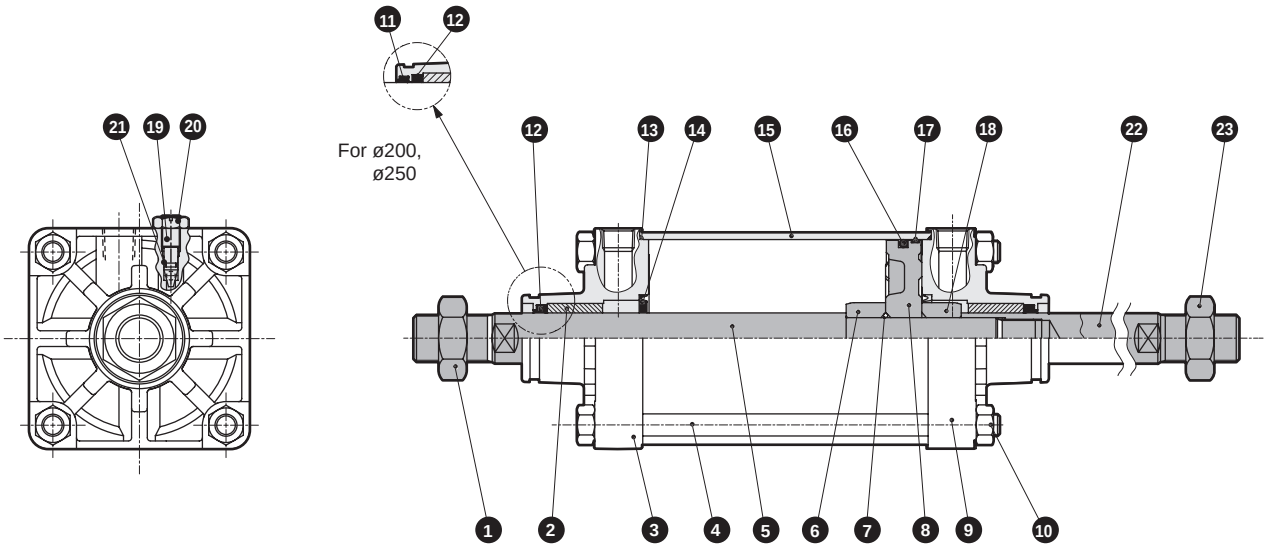

● Note: ⓮, ⓳, ⓴ and ㉑ are not required for the type without cushion.

No.	Part name	Material	Remarks	No.	Part name	Material	Remarks
1	Hexagon nut	Steel	Zinc chromate	13	Cylinder gasket	Nitrile rubber	
2	Bush	Iron-copper oil-impregnated bearing alloy		14	Cushion packing	Nitrile rubber/steel	
3	Rod cover	Aluminum alloy casting	Chromate	15	Cylinder tube	Aluminum alloy	Hard alumite
4	Tie rod	Steel	Zinc chromate	16	Piston packing	Nitrile rubber	
5	Piston rod A	Steel	Industrial chrome plating	17	Wear ring	Polyacetal resin	
6	Cushion ring A	Steel	Zinc chromate	18	Cushion ring B	Steel	Zinc chromate
7	Piston gasket	Nitrile rubber		19	Cushion needle	Copper alloy (ø125 to ø180)	
8	Piston	Aluminum alloy casting				Steel (ø200, 250)	Zinc chromate
9	Head cover	Aluminum alloy casting	Chromate	20	Hexagon nut	Steel	Zinc chromate
10	Hexagon nut	Steel	Zinc chromate	21	Needle gasket	Nitrile rubber	
11	Dust wiper	Nitrile rubber	ø200 and ø250 only	22	Piston rod B	Steel	Industrial chrome plating
12	Rod packing	Nitrile rubber		23	Hexagon nut	Steel	Zinc chromate

Repair parts list

Bore size (mm)	Kit No.	Repair parts No.
ø125	SCS2-D-125K	⓬ ⓭ ⓮ ⓰ ⓱ ㉑
ø140	SCS2-D-140K	
ø160	SCS2-D-160K	
ø180	SCS2-D-180K	
ø200	SCS2-D-200K	⓫ ⓬ ⓭ ⓮ ⓰ ⓱ ㉑
ø250	SCS2-D-250K	

Dimensions

● Basic (00)

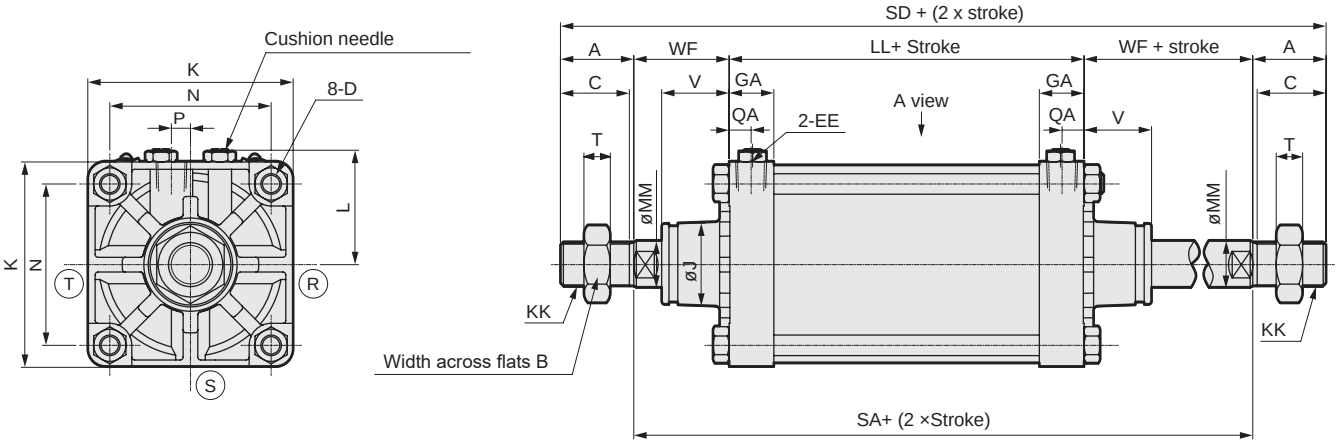

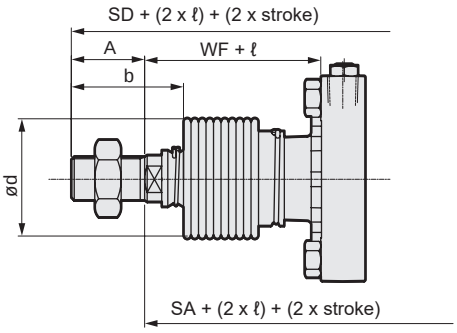

[With bellows]

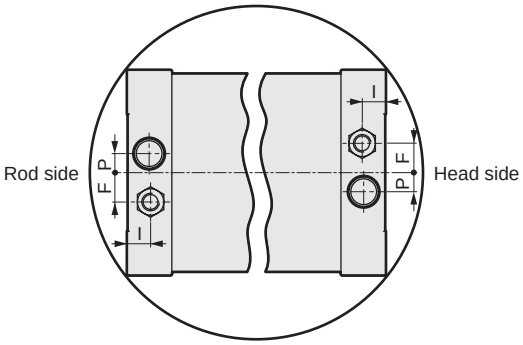

Port position diagram (A view)

*1: Ⓡ, Ⓢ and Ⓣ indicate the cushion needle position.
*2: The positions for the left and right widths across flats are unspecified.

Code	Basic (00) Basic dimensions												
Bore size(mm)	A	B	C	D	EE	GA	F	I	J	K	KK	L	LL
ø125	50	46	47	M 14 x 1.5	Rc1/2	30.5	20	16	57	140	M 30 x 1.5	78 to 82	92
ø140	50	46	47	M 14 x 1.5	Rc3/4	34.5	20	20	57	157	M 30 x 1.5	86.5 to 91	103
ø160	56	55	53	M 16 x 1.5	Rc3/4	34.5	24	20	62	177	M 36 x 1.5	96.5 to 101	106
ø180	63	60	60	M 18 x 1.5	Rc3/4	34.5	24	20	68	200	M 40 x 1.5	108 to 112	110
ø200	72	70	69	M 20 x 1.5	Rc3/4	37.5	24	20.5	75	220	M 45 x 1.5	120.5 to 129	123
ø250	88	85	84	M 24 x 1.5	Rc1	42.5	24	20.5	93	274	M 56 x 2	147.5 to 156	141

Code										With bellows		
Bore size(mm)	MM	N	P	QA	SA	SD	T	V	WF	b	d	ℓ
ø125	32	110	13	15	222	322	18	45.5	65	74	75	(stroke/4.55) + 11
ø140	32	124	15	17	237	337	18	45.5	67	74	75	(stroke/4.55) + 9
ø160	40	142	15	17	248	360	21	48	71	82	80	(stroke/5.15) + 9
ø180	45	160	15	17	266	392	24	53	78	91	90	(stroke/5.15) + 9
ø200	50	175	20	18	299	443	27	60	88	102	95	(stroke/5.30) + 9
ø250	60	216	22	21	329	505	34	64	94	120	120	(stroke/6.40) + 9

* Dimensions of other mounting are the same as those of the double acting SCS2 Series. Refer to pages 631 to 638.
* For the dimensions of the accessories, refer to page 639.

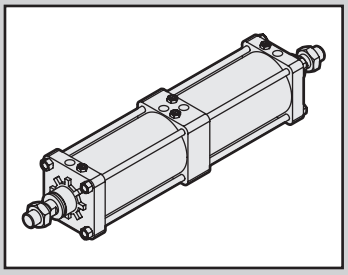

Large bore size cylinder
Double acting/back to back

SCS2-B Series

● Bore size: ø125/ø140/ø160/ø180/ø200/ø250

JIS symbol

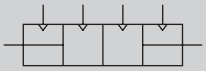

RoHS

* Made-to-order product.

Specifications

Item		SCS2-B (back to back)					
Bore size mm		ø125	ø140	ø160	ø180	ø200	ø250
Actuation		Double acting					
Working fluid		Compressed air					
Max. working pressure MPa		1.0 (≈150 psi, 10 bar)					
Min. working pressure MPa		0.05 (≈7.3 psi, 0.5 bar)					
Proof pressure MPa		1.6 (≈230 psi, 16 bar)					
Ambient temperature °C		-5 (23°F) to 60 (140°F) (no freezing)					
Port size		Rc1/2	Rc3/4				Rc1
Stroke tolerance mm		$^{+1.0}_{0}$ (to 300), $^{+1.4}_{0}$ (to 1000), $^{+1.8}_{0}$ (to 1200)					
Working piston speed mm/s		20 to 1000 (Operate within the absorbed energy.)					
Cushion		Air cushion					
Effective air cushion length mm		21.6	21.6	21.6	21.6	26.6	26.6
Lubrication		Required (use turbine oil class 1 ISO VG32 for lubrication)					
Allowable absorbed energy J	Cushioned	63.5	91.5	116	152	233	362
	Without cushion	0.371	0.386	0.386	0.958	1.08	2.32
		Without any cushion, this product cannot absorb large energy generated by an external load. We recommend using an external shock absorber.					

Stroke

Bore size (mm)	Standard stroke (mm)	Max. stroke (mm)	Min. stroke (mm)	Trunnion, min. stroke (mm)
ø125	50/75/100/150/200/250/300	800	1	23
ø140				25
ø160				27
ø180		900		28
ø200		1,000		28
ø250		1,200		28

*1: The custom stroke is available in 1 mm increments.

Cylinder weight

(Unit: kg)

Item/mounting / Bore size (mm)	Product weight when stroke (S) = 0 mm						Additional weight per S = 100 mm
	Basic (00)	Axial foot (LB)	Flange (FA/FB)	Eye bracket (CA)	Clevis bracket (CB)	Trunnion (TA/TB/TC)	
ø125	14.44	15.94	17.74	17.44	17.54	17.84	1.54
ø140	18.70	20.70	24.10	22.50	22.70	21.90	1.78
ø160	24.70	27.80	31.60	29.70	30.00	31.10	2.22
ø180	33.50	38.00	45.50	40.90	41.40	41.60	2.96
ø200	45.56	51.26	59.26	55.06	55.26	57.36	3.54
ø250	81.02	89.42	106.92	105.02	99.52	109.72	5.38

(Example) Product weight of SCS2-B-LB-125B-300-300
- ● Product weight for S = 0 mm stroke ····· 15.94 kg
- ● Additional weight for S = 300 mm stroke ····· 2 x 1.54 x $\frac{300}{100}$ = 9.24 kg
- ● Product weight ····· 15.94 + 9.24 = 25.18 kg

Theoretical thrust table

(Unit: N)

Bore size (mm)	Operating direction	Working pressure MPa											
		0.05	0.1	0.15	0.2	0.3	0.4	0.5	0.6	0.7	0.8	0.9	1.0
ø125	Push	6.14×10^{2}	1.23×10^{3}	1.84×10^{3}	2.45×10^{3}	3.68×10^{3}	4.91×10^{3}	6.14×10^{3}	7.36×10^{3}	8.59×10^{3}	9.82×10^{3}	1.10×10^{4}	1.23×10^{4}
	Pull	5.73×10^{2}	1.15×10^{3}	1.72×10^{3}	2.29×10^{3}	3.44×10^{3}	4.59×10^{3}	5.73×10^{3}	6.88×10^{3}	8.03×10^{3}	9.17×10^{3}	1.03×10^{4}	1.15×10^{4}
ø140	Push	7.70×10^{2}	1.54×10^{3}	2.31×10^{3}	3.08×10^{3}	4.62×10^{3}	6.16×10^{3}	7.70×10^{3}	9.24×10^{3}	1.08×10^{4}	1.23×10^{4}	1.39×10^{4}	1.54×10^{4}
	Pull	7.29×10^{2}	1.46×10^{3}	2.19×10^{3}	2.92×10^{3}	4.38×10^{3}	5.84×10^{3}	7.29×10^{3}	8.75×10^{3}	1.02×10^{4}	1.17×10^{4}	1.31×10^{4}	1.46×10^{4}
ø160	Push	1.01×10^{3}	2.01×10^{3}	3.02×10^{3}	4.02×10^{3}	6.03×10^{3}	8.04×10^{3}	1.01×10^{4}	1.21×10^{4}	1.41×10^{4}	1.61×10^{4}	1.81×10^{4}	2.01×10^{4}
	Pull	9.42×10^{2}	1.88×10^{3}	2.83×10^{3}	3.77×10^{3}	5.65×10^{3}	7.54×10^{3}	9.42×10^{3}	1.13×10^{4}	1.32×10^{4}	1.51×10^{4}	1.70×10^{4}	1.88×10^{4}
ø180	Push	1.27×10^{3}	2.54×10^{3}	3.82×10^{3}	5.09×10^{3}	7.63×10^{3}	1.02×10^{4}	1.27×10^{4}	1.53×10^{4}	1.78×10^{4}	2.04×10^{4}	2.29×10^{4}	2.54×10^{4}
	Pull	1.19×10^{3}	2.39×10^{3}	3.58×10^{3}	4.77×10^{3}	7.16×10^{3}	9.54×10^{3}	1.19×10^{4}	1.43×10^{4}	1.67×10^{4}	1.91×10^{4}	2.15×10^{4}	2.39×10^{4}
ø200	Push	1.57×10^{3}	3.14×10^{3}	4.71×10^{3}	6.28×10^{3}	9.42×10^{3}	1.26×10^{4}	1.57×10^{4}	1.88×10^{4}	2.20×10^{4}	2.51×10^{4}	2.83×10^{4}	3.14×10^{4}
	Pull	1.47×10^{3}	2.95×10^{3}	4.42×10^{3}	5.89×10^{3}	8.84×10^{3}	1.18×10^{4}	1.47×10^{4}	1.77×10^{4}	2.06×10^{4}	2.36×10^{4}	2.65×10^{4}	2.95×10^{4}
ø250	Push	2.45×10^{3}	4.91×10^{3}	7.36×10^{3}	9.82×10^{3}	1.47×10^{4}	1.96×10^{4}	2.45×10^{4}	2.95×10^{4}	3.44×10^{4}	3.93×10^{4}	4.42×10^{4}	4.91×10^{4}
	Pull	2.31×10^{3}	4.63×10^{3}	6.94×10^{3}	9.25×10^{3}	1.39×10^{4}	1.85×10^{4}	2.31×10^{4}	2.78×10^{4}	3.24×10^{4}	3.70×10^{4}	4.16×10^{4}	4.63×10^{4}

How to order

No switch (without magnet for switch)

Cylinder 1 stroke S1 — Cylinder 2 stroke S2

SCS2-B - LB - 125 - ◯ B 50 - ◯ B 50 - J Y

Ⓐ Mounting — Ⓑ Bore size — Ⓒ Port thread — Ⓒ Port thread — Ⓓ Cushion =S1 — Ⓓ Cushion =S2 — Ⓔ Stroke = S1 — Ⓔ Stroke = S2 — Ⓕ Option *2 — *3 — Ⓖ Accessory

Code	Description
Ⓐ Mounting	
00	Basic
LB	Axial foot
FA	Rod side flange
TA	Rod side trunnion
TB	Head side trunnion
Ⓑ Bore size (mm)	
125	ø125
140	ø140
160	ø160
180	ø180
200	ø200
250	ø250
Ⓒ Port thread	
Blank	Rc thread
N	NPT thread(made-to-order product)
G	G thread (made-to-order product)
Ⓓ Cushion	
B	Both sides cushioned
R	Rod side cushioned
H	Head side cushioned
N	Without cushion

Ⓔ Stroke (mm)

Bore size	Stroke	Custom stroke
ø125 to ø160	**1 to 800**	**In 1 mm increments**
ø180	**1 to 900**	
ø200	**1 to 1000**	
ø250	**1 to 1200**	

Ⓕ Option

		Max. ambient temp.	Instantaneous ambient temp
C2	With cushion section check valve		
J	Bellows	100°C	200°C
L	Bellows	250°C	400°C
M	Piston rod material (stainless steel)		
Blank	Cushion needle position (standard)	Standard	
R	Cushion needle position R	T R	
S	Cushion needle position S	S	
T	Cushion needle position T		
P6	Copper and PTFE free (made to order)		

Ⓖ Accessory

I	Rod eye
Y	Rod clevis (pin and snap ring included)

⚠ Precautions for model No. selection

*1: Supporting hole is available custom made for ø125 to 160 only. Contact CKD for details about dimensions.
*2: The instantaneous max. temperature is the temperature when sparks, cutting chips, etc., instantaneously contact the bellows.
*3: Check the figures below for the cushion needle position indication.

[Example of model No.]

SCS2-B-LB-125-B50-B50-JY

Model: Large bore size cylinder, double acting/back to back

Ⓐ Mounting	: Axial foot	Cylinder 1 stroke 50 mm	(S1)
Ⓑ Bore size	: ø125 mm	+ Cylinder 2 stroke 50 mm	(S2)
Ⓒ Port thread	: Rc thread	Total stroke 100 mm	(S1 + S2)
Ⓓ Cushion	: With two-sided air cushion — Cylinder 1		
Ⓔ Stroke S1	: 50 mm		
Ⓒ Port thread	: Rc thread		
Ⓓ Cushion	: With two-sided air cushion — Cylinder 2		
Ⓔ Stroke S2	: 50 mm		
Ⓕ Option	: Bellows material for max. ambient temperature 100°C		
Ⓖ Accessory	: Rod clevis		

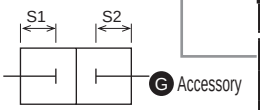

Cushion needle position

(Needle position with the port on the top when viewed from the rod end)

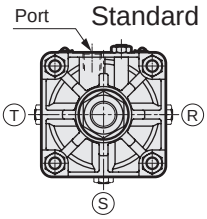

Certified class 2 pressure vessel stroke

Bore size	S1 + S2 stroke
ø180	1481 or more
ø200	892 or more
ø250	690 or more

Internal structure

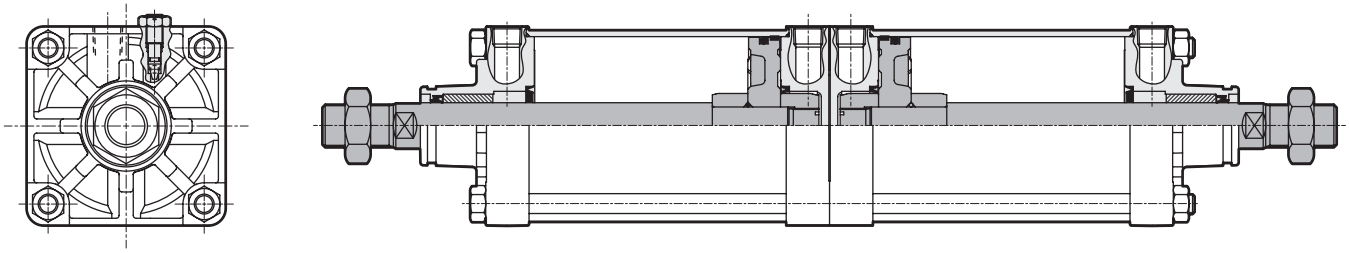

Note: The parts list is common with double acting SCS2 Series. Two sets of the parts are required. Refer to page 629.

Repair parts list

The parts are common with SCS2 Series and two sets of them are required. Refer to page 629.

Applications

When the same strokes are combined, 3 positions are available.

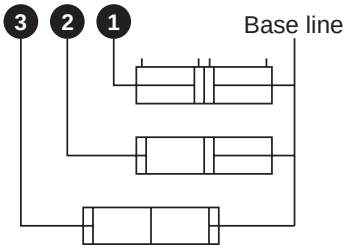

When different strokes are combined, 4 positions are available.

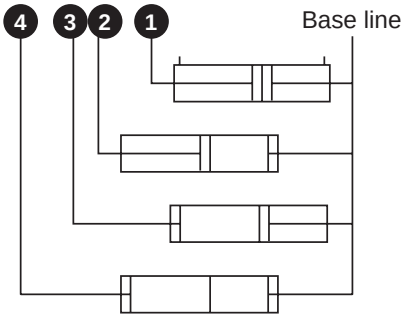

Dimensions

● Basic (00)

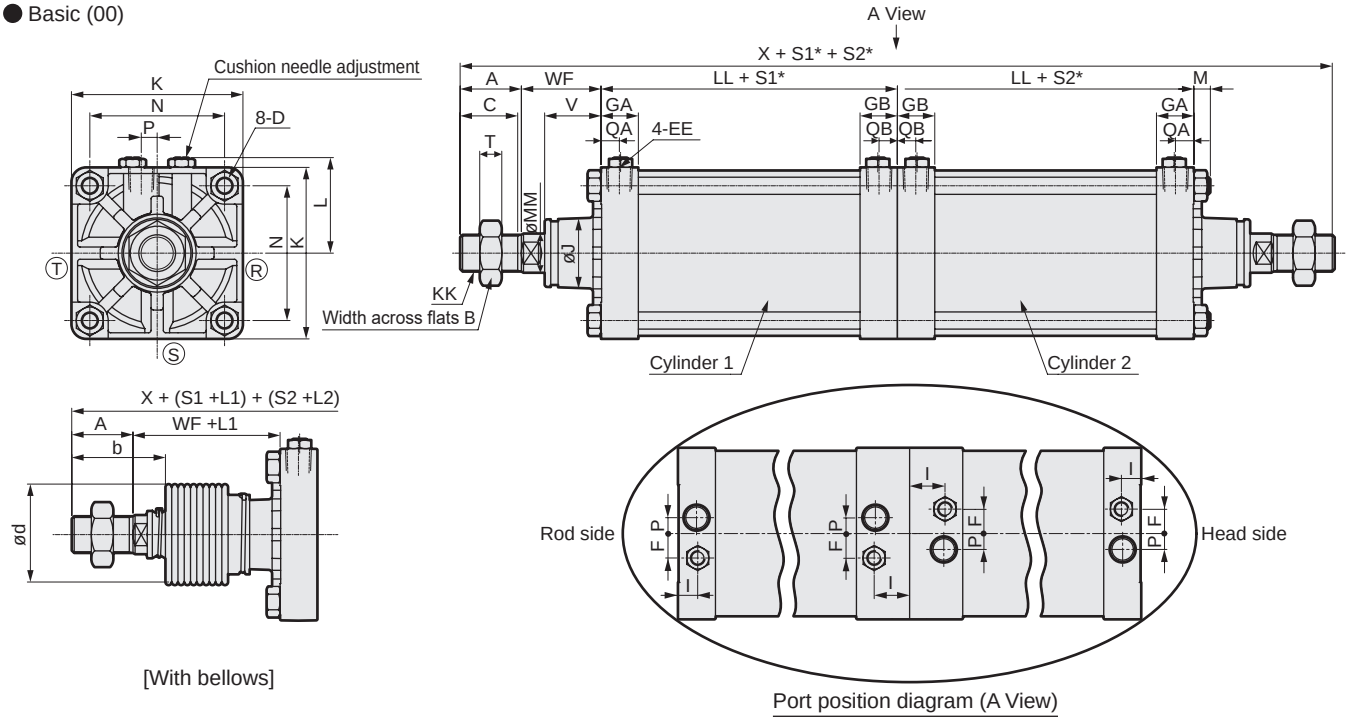

[With bellows]

Port position diagram (A View)

*1: Ⓡ, Ⓢ and Ⓣ indicate the cushion needle position.

*: S1 = Cylinder 1 stroke, S2 = Cylinder 2 stroke

Code / Bore size (mm)	A	B	C	D	EE	GA	GB	F	I	J	K	KK	L	LL	M	MM
ø125	50	46	47	M14x1.5	Rc1/2	30.5	30.5	20	16	57	140	M30x1.5	78 to 82	92	13.5	32
ø140	50	46	47	M14x1.5	Rc3/4	34.5	34.5	20	20	57	157	M30x1.5	86.5 to 91	103	13.5	32
ø160	56	55	53	M16x1.5	Rc3/4	34.5	34.5	24	20	62	177	M36x1.5	96.5 to 101	106	15.5	40
ø180	63	60	60	M18x1.5	Rc3/4	34.5	34.5	24	20	68	200	M40x1.5	108 to 112	110	17.5	45
ø200	72	70	69	M20x1.5	Rc3/4	37.5	37.5	24	20.5	75	220	M45x1.5	120.5 to 129	123	18.5	50
ø250	88	85	84	M24x1.5	Rc1	42.5	42.5	24	20.5	93	274	M56x2	147.5 to 156	141	21.5	60

Code / Bore size (mm)	N	T	P	QA	QB	V	WF	X	With bellows b	With bellows d	With bellows L
ø125	110	18	13	15	15	45.5	65	414	74	75	(Stroke/4.55) + 11
ø140	124	18	15	17	17	45.5	67	440	74	75	(Stroke/4.55) + 9
ø160	142	21	15	17	17	48	71	466	82	80	(Stroke/5.15) + 9
ø180	160	24	15	17	17	53	78	502	91	90	(Stroke/5.15) + 9
ø200	175	27	20	18	18	60	88	566	102	95	(Stroke/5.30) + 9
ø250	216	34	22	21	21	64	94	646	120	120	(Stroke/6.40) + 9

Note: Dimensions of other mounting are the same as those of double acting SCS2 Series. Refer to pages 631 to 638. Installation positions of the flange (mounting: FA) and trunnion (mounting: TA/TB/TD/TE) are as below.

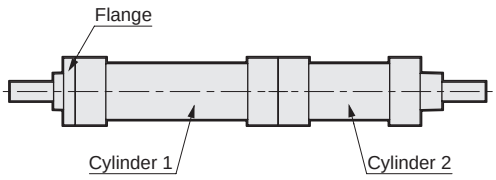

Mounting: FA

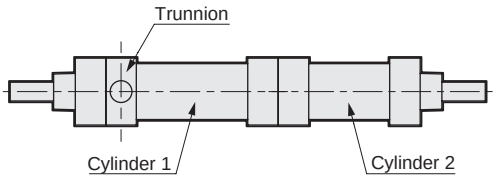

Mounting: TA, TD

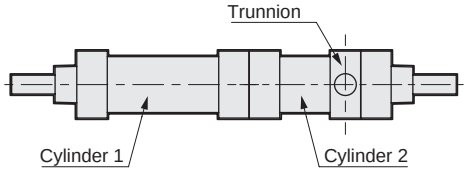

Mounting: TB, TE

* For the dimensions of the accessories, refer to page 639.

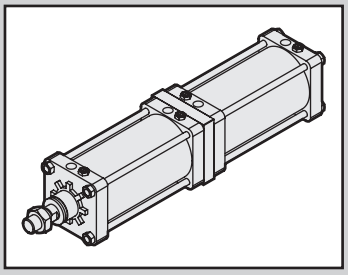

Large bore size cylinder
Double acting/2-stage

SCS2-W Series

● Bore size: ø125/ø140/ø160/ø180/ø200/ø250

RoHS

* Made-to-order product.

Specifications

Item		SCS2-W (2-stage)					
Bore size mm		ø125	ø140	ø160	ø180	ø200	ø250
Actuation		Double acting					
Working fluid		Compressed air					
Max. working pressure MPa		1.0 (≈150 psi, 10 bar) *1					
Min. working pressure MPa		0.1 (≈15 psi, 1 bar)					
Proof pressure MPa		1.6 (≈230 psi, 16 bar)					
Ambient temperature °C		-5 (23°F) to 60 (140°F) (no freezing)					
Port size		Rc1/2	Rc3/4				Rc1
Stroke tolerance mm		$^{+1.0}_{0}$(to 300), $^{+1.4}_{0}$(to 1000), $^{+1.8}_{0}$(to 1200)					
Working piston speed mm/s		20 to 1000 (Operate within the absorbed energy.)					
Cushion		Air cushion					
Effective air cushion length mm		21.6	21.6	21.6	21.6	26.6	26.6
Lubrication		Required (use turbine oil class 1 ISO VG32 for lubrication)					
Allowable absorbed energy J	Cushioned	63.5	91.5	116	152	233	362
	Without cushion	0.371	0.386	0.386	0.958	1.08	2.32
		Without any cushion, this product cannot absorb large energy generated by an external load. We recommend using an external shock absorber.					

*1: Max. working pressure is 0.5 MPa when S1 and S2 are the same value.

Stroke

Bore size (mm)	Standard stroke (mm)	Max. stroke (mm)	Min. stroke (mm)	Trunnion min. stroke (mm)
ø125	50/75/100/150/200/250/300	800	2 (Total stroke)	23
ø140				25
ø160				27
ø180		900		28
ø200		1,000		28
ø250		1,200		28

*1: The custom stroke is available in 1 mm increments.

Cylinder weight

(Unit: kg)

Item/mounting / Bore size (mm)	Product weight when stroke (S) = 0 mm						Additional weight per S = 100 mm
	Basic (00)	Axial foot (LB)	Flange (FA/FB)	Eye bracket (CA)	Clevis bracket (CB)	Trunnion (TA/TB/TC)	
ø125	18.62	20.12	21.92	21.62	21.72	22.02	1.54
ø140	23.99	25.99	29.39	27.79	27.99	27.19	1.78
ø160	31.38	34.48	38.28	36.38	36.68	37.78	2.22
ø180	43.50	48.00	55.50	50.90	51.40	51.60	2.96
ø200	58.38	64.08	72.08	67.88	68.08	70.18	3.54
ø250	103.53	111.93	129.43	127.53	122.03	132.23	5.38

(Example) Product weight of SCS2-W-LB-125B-300-300
- ● Product weight for S = 0 mm stroke ····· 20.12 kg
- ● Additional weight for S = 300 mm stroke ····· 2 x 1.54 x $\frac{300}{100}$ = 9.24 kg
- ● Product weight ····· 20.12 + 9.24 = 29.36 kg

How to order

No switch (without magnet for switch)

SCS2-W - LB - 125 - ◯ B 200 - ◯ B 50 - J Y

Total stroke S1 — 1st stage stroke S2

Ⓐ Mounting *1 — Ⓑ Bore size — Ⓒ Port thread — Ⓒ Port thread — Ⓓ Cushion =S1 — Ⓓ Cushion =S2 — Ⓔ Stroke = S1 — Ⓔ Stroke = S2 *2 — Ⓕ Option *3 — Ⓖ Accessory

Code	Description
Ⓐ Mounting	
00	Basic
LB	Axial foot
FA	Rod side flange
FB	Head side flange
CA	Eye bracket
CB	Clevis bracket (pin and snap ring included)
TA	Rod side trunnion
TB	Head side trunnion
Ⓑ Bore size (mm)	
125	ø125
140	ø140
160	ø160
180	ø180
200	ø200
250	ø250
Ⓒ Port thread	
Blank	Rc thread
N	NPT thread (made-to-order product)
G	G thread (made-to-order product)
Ⓓ Cushion	
B	Both sides cushioned
R	Rod side cushioned
H	Head side cushioned
N	Without cushion

Ⓔ Stroke (mm)

Bore size	Stroke	Custom stroke
ø125 to ø160	2 to 800	In 1 mm increments
ø180	2 to 900	
ø200	2 to 1000	
ø250	2 to 1200	

Ⓕ Option

		Max. ambient temp.	Instantaneous ambient temp
C2	With cushion section check valve		
J	Bellows	100°C	200°C
L	Bellows	250°C	400°C
M	Piston rod material (stainless steel)		
Blank	Cushion needle position (standard)		
R	Cushion needle position R		
S	Cushion needle position S		
T	Cushion needle position T		
P6	Copper and PTFE free (made to order)		

*4 Standard: T, R, S

Ⓖ Accessory

I	Rod eye
Y	Rod clevis (pin and snap ring included)
B1	Eye bracket
B2	Clevis bracket (pin and snap ring included)

⚠ Precautions for model No. selection

*1: Supporting hole is available custom made for ø125 to 160 only. Contact CKD for details about dimensions.
*2: The max. stroke of S2 (1st stage) is 200 mm.
*3: The instantaneous max. temperature is the temperature when sparks, cutting chips, etc., instantaneously contact the bellows.
*4: Check the figures below for the cushion needle position indication.

[Example of model No.]

SCS2-W-LB-125-B200-B50-JY

Model: Large bore size cylinder, double acting/2-stage

Ⓐ Mounting	: Axial foot	
Ⓑ Bore size	: ø125 mm	
Ⓒ Port thread	: Rc thread	Cylinder 1
Ⓓ Cushion	: Both sides cushioned	
Ⓔ Stroke S1	: Total stroke 200 mm	
Ⓒ Port thread	: Rc thread	Cylinder 2
Ⓓ Cushion	: Both sides cushioned	
Ⓔ Stroke S2	: 1st stage stroke 50 mm	
Ⓕ Option	: Bellows material for max. ambient temperature 100°C	
Ⓖ Accessory	: Rod clevis	

1st stage stroke □·□·□ 50 mm (S2)
+ 2nd stage stroke ·□·□·□ 150 mm
Total stroke 200 mm (S1)

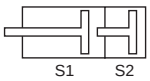

Cushion needle position

(Needle position with the port on the top when viewed from the rod end)

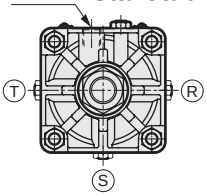

Certified class 2 pressure vessel stroke

Bore size	S1 + S2 stroke
ø200	892 or more
ø250	690 or more

Internal structure and parts list

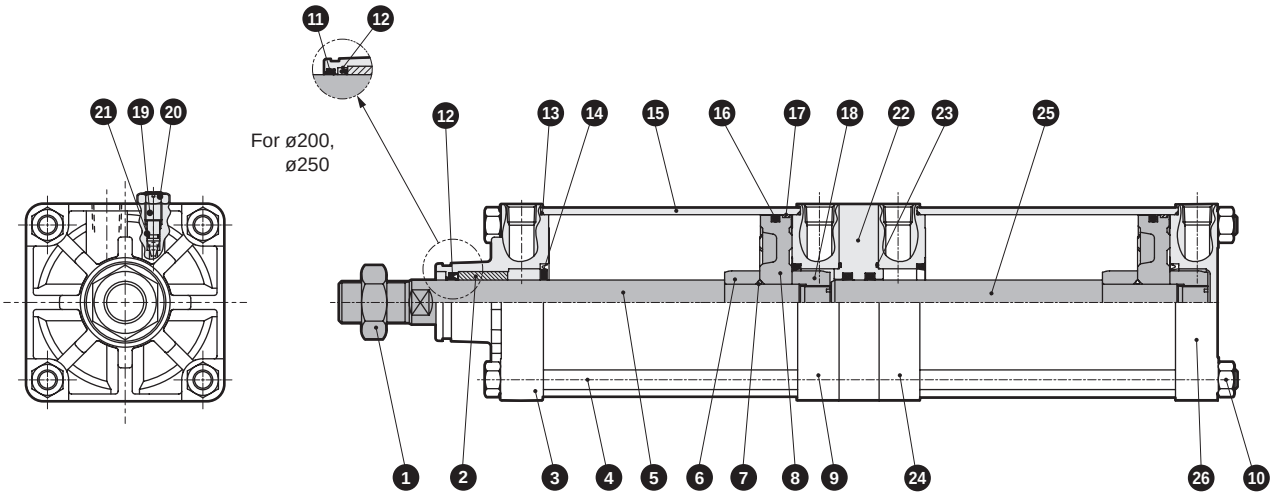

● Note: 14, 19, 20 and 21 are not required for the type without cushion.

No.	Part name	Material	Remarks
1	Hexagon nut	Steel	Zinc chromate
2	Bush	Iron-copper oil-impregnated bearing alloy	
3	Rod cover	Aluminum alloy casting	Chromate
4	Tie rod	Steel	Zinc chromate
5	Piston rod A	Steel	Industrial chrome plating
6	Cushion ring A	Steel	Zinc chromate
7	Piston gasket	Nitrile rubber	
8	Piston	Aluminum alloy casting	
9	Intermediate cover (1)	Aluminum alloy casting	Chromate
10	Hexagon nut	Steel	Zinc chromate
11	Dust wiper	Nitrile rubber	ø200 and ø250 only
12	Rod packing	Nitrile rubber	
13	Cylinder gasket	Nitrile rubber	

No.	Part name	Material	Remarks
14	Cushion packing	Nitrile rubber/steel	
15	Cylinder tube	Aluminum alloy	Hard alumite
16	Piston packing	Nitrile rubber	
17	Wear ring	Polyacetal resin	
18	Cushion ring B	Steel	Zinc chromate
19	Cushion needle	Copper alloy (ø125 to ø180)	
		Steel (ø200, 250)	Zinc chromate
20	Hexagon nut	Steel	Zinc chromate
21	Needle gasket	Nitrile rubber	
22	Intermediate plate	Cast iron	Paint
23	Metal gasket	Nitrile rubber	
24	Intermediate cover (2)	Aluminum alloy casting	Chromate
25	Piston rod B	Steel	Industrial chrome plating
26	Head cover	Aluminum alloy casting	Chromate

Repair parts list

Bore size (mm)	Kit No.	Repair parts No.
ø125	SCS2-W-125K	12 13 14 16 17 21 23
ø140	SCS2-W-140K	
ø160	SCS2-W-160K	
ø180	SCS2-W-180K	
ø200	SCS2-W-200K	11 12 13 14 16 17 21 23
ø250	SCS2-W-250K	

Applications

Pressure setting: P2 > P1
● 1st stage push
Keeping port 4 pressurized, pressurize port 1.
● 2nd stage push
Keeping port 1 pressurized, pressurize port 3.

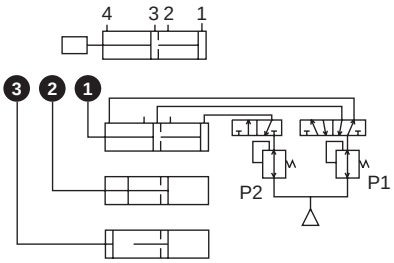

P2 = P1 is allowed depending on the load direction.When using a single acting cylinder with free fall load, ports 2 and 4 in the upper figure and ports 2 and 3 in the lower figure are breathing holes.
Cushion performance will be better when all ports are piped even if piping them is not necessary (port 2 in this case).

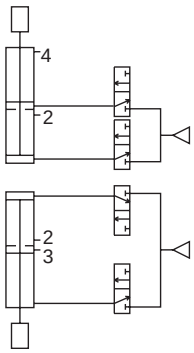

Dimensions

● Basic (00)

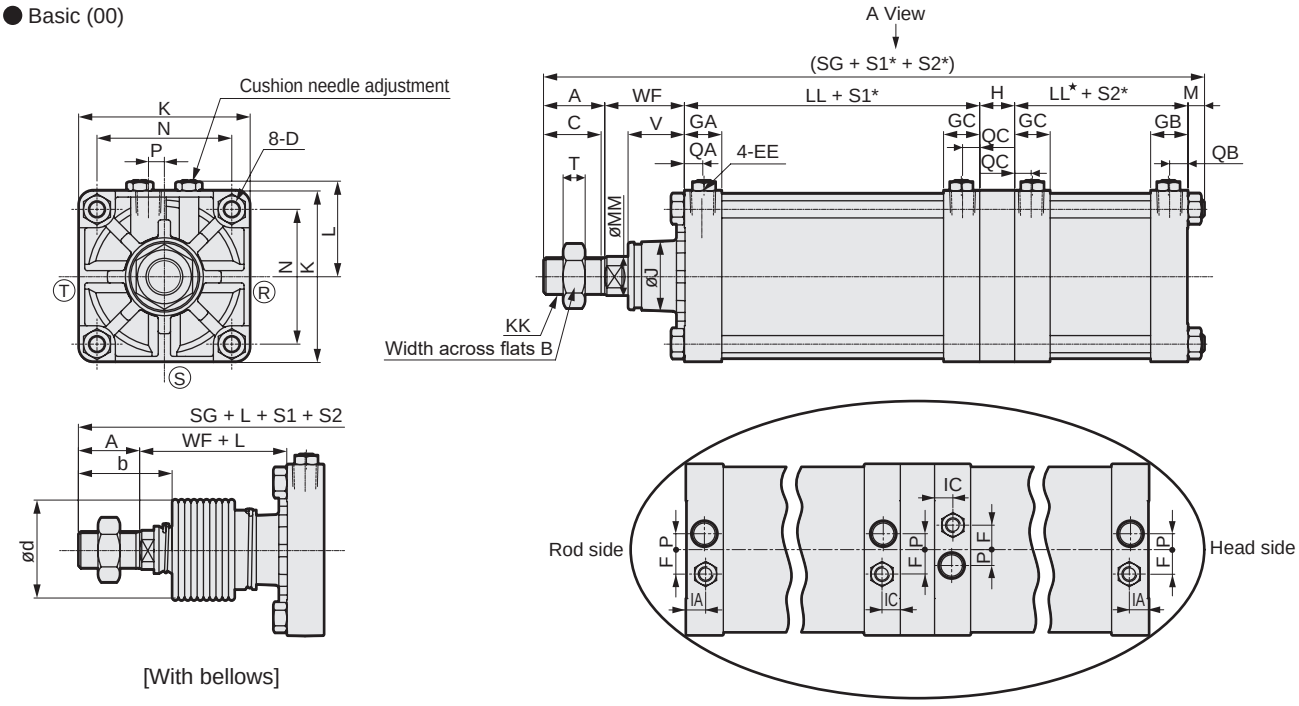

[With bellows]

Port position diagram (A View)

*1: Ⓡ, Ⓢ and Ⓣ indicate the cushion needle position.

*: S1 = Cylinder 1 stroke, S2 = Cylinder 2 stroke

Code	Basic (00) Basic dimensions															
Bore size (mm)	A	B	C	D	EE	GA	GB	GC	F	IA	IC	H	J	K	KK	L
ø125	50	46	47	M14x1.5	Rc1/2	30.5	30.5	29.5	20	16	15	28	57	140	M30x1.5	78 to 82
ø140	50	46	47	M14x1.5	Rc3/4	34.5	34.5	33.5	20	20	19	28	57	157	M30x1.5	86.5 to 91
ø160	56	55	53	M16x1.5	Rc3/4	34.5	34.5	33.5	24	20	19	28	62	177	M36x1.5	96.5 to 101
ø180	63	60	60	M18x1.5	Rc3/4	34.5	34.5	33.5	24	20	19	33	68	200	M40x1.5	108 to 112
ø200	72	70	69	M20x1.5	Rc3/4	37.5	37.5	36.5	24	20.5	19.5	35	75	220	M45x1.5	120.5 to 129
ø250	88	85	84	M24x1.5	Rc1	42.5	42.5	41.5	24	20.5	24.5	39	93	274	M56x2	147.5 to 156

Code														With bellows		
Bore size (mm)	LL	LL*	MM	M	P	QA	QB	QC	N	SG	T	V	WF	b	d	L
ø125	91	92	32	13.5	13	15	15	14	110	339.5	18	45.5	65	74	75	(Stroke/4.55) + 11
ø140	102	103	32	13.5	15	17	17	16	124	363.5	18	45.5	67	74	75	(Stroke/4.55) + 9
ø160	105	106	40	15.5	15	17	17	16	142	381.5	21	48	71	82	80	(Stroke/5.15) + 9
ø180	109	110	45	17.5	15	17	17	16	160	410.5	24	53	78	91	90	(Stroke/5.15) + 9
ø200	122	123	50	18.5	20	18	18	17	175	458.5	27	60	88	102	95	(Stroke/5.30) + 9
ø250	140	141	60	21.5	22	21	21	20	216	523.5	34	64	94	120	120	(Stroke/6.40) + 9

Note: Dimensions of other mounting are the same as those of double acting SCS2 Series. Refer to pages 631 to 638. Installation positions of the flange (mounting: FA/FB) and trunnion (mounting: TA/TB/TD/TE) are as below.

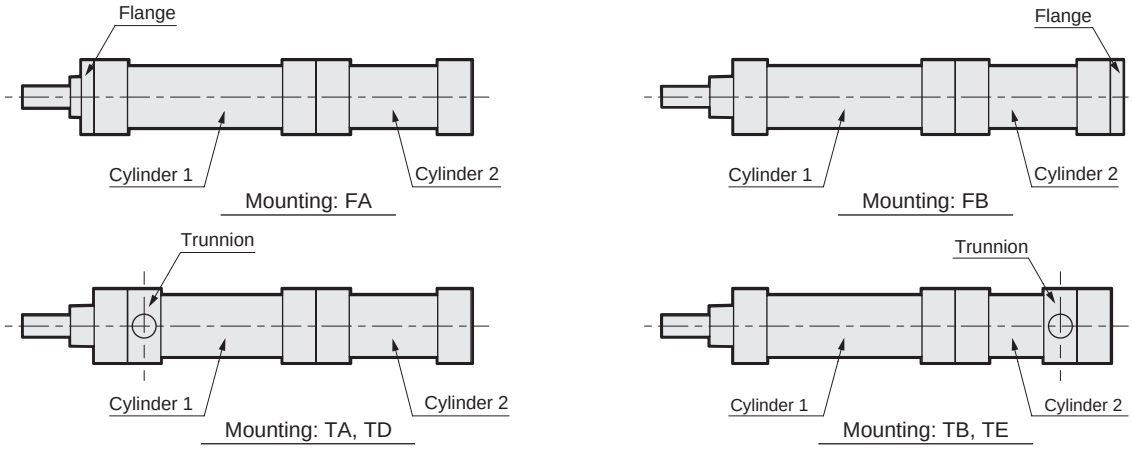

* For the dimensions of the accessories, refer to page 639.

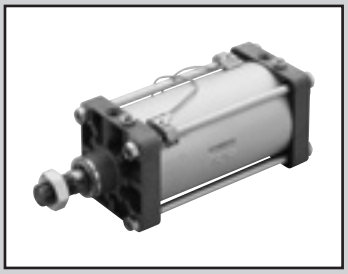

Large bore size cylinder
Double acting/low hydraulic

SCS2-H Series

● Bore size: ø125/ø140/ø160/ø180/ø200/ø250

JIS symbol

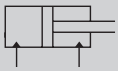

RoHS

* Made-to-order product.

Specifications

Item		SCS2-H/SCS2-LH (low hydraulic)					
Bore size	mm	ø125	ø140	ø160	ø180	ø200	ø250
Actuation		Double acting					
Working fluid		Hydraulic fluid					
Max. working pressure	MPa	1.0 (≈150 psi, 10 bar)					
Min. working pressure	MPa	0.1 (≈15 psi, 1 bar)					
Proof pressure	MPa	1.6 (≈230 psi, 16 bar)					
Ambient temperature	°C	5 (41°F) to 50 (122°F)					
Port size		Rc1/2	Rc3/4				Rc1
Stroke tolerance	mm	$^{+1.0}_{0}$ (to 300), $^{+1.4}_{0}$ (to 1000), $^{+1.8}_{0}$ (to 1200)					
Cushion		Cushion					
Effective air cushion length	mm	21.6	21.6	21.6	21.6	26.6	26.6
Allowable absorbed energy	J, Cushioned	The cushioning of the low hydraulic cylinder cannot absorb large energy. We recommend using an external shock absorber.					
	J, Without cushion	0.371	0.386	0.386	0.958	1.08	2.32
	J, Without cushion	Without any cushion, this product cannot absorb large energy generated by an external load. We recommend using an external shock absorber.					

Stroke

Bore size (mm)	Standard stroke (mm)	Max. stroke (mm)	Min. stroke (mm)	Trunnion min. stroke (mm)
ø125	50/75/100/150/200/250/300	800	20	23
ø140				25
ø160				27
ø180		900		28
ø200		1,000		28
ø250		1,200		28

*1: The custom stroke is available in 1 mm increments.

Min. stroke with switch

Item / Bore size (mm)		Stroke when mounted on the same surface	Stroke of intermediate supporting hole trunnion	Stroke of rod side supporting hole trunnion	Stroke of head side supporting hole trunnion
Switch	Sketch	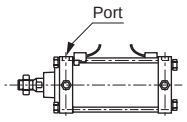	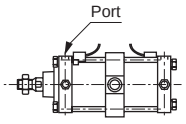	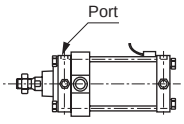 Position cannot be detected at the rod side stroke end.	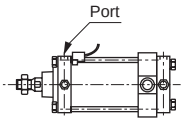 Position cannot be detected at the head side stroke end.
Reed switch (T*)	ø125	20 or more	120 or more	70 or more	
	ø140		125 or more	75 or more	
	ø160		130 or more	80 or more	
	ø180		135 or more	85 or more	
	ø200		140 or more	90 or more	
	ø250		150 or more	100 or more	

Switch specifications

● 1-color/2-color LED/for AC magnetic field proof

Item	2-wire proximity				3-wire proximity				2-wire reed							2-wire proximity
	T1H/ T1V	T2H/T2V/ T2JH/T2JV	T2YH/ T2YV	T2WH/ T2WV	T3H/ T3V	T3PH/ T3PV	T3YH/ T3YV	T3WH/ T3WV	T0H/T0V		T5H/T5V		T8H/T8V			T2YD (*4) T2YDT
Applications	For programmable controller, relay, compact solenoid valve	Dedicated for programmable controller			For programmable controller, relay				For programmable controller, relay		For programmable controller, relay, IC circuit (no indicator lamp), serial connection		For programmable controller, relay			For programmable controller
Output method	-				NPN output	PNP output	NPN output	NPN output	-							
Pwr. supp. V.	-				10 to 28 VDC				-							
Load voltage	85 to 265 VAC	10 to 30 VDC		24 VDC ±10%	30 VDC or less				12/24 VDC	110 VAC	5/12/24 VDC	110 VAC	12/24 VDC	110 VAC	220 VAC	24 VDC ±10%
Load current	5 to 100 mA	5 to 20 mA (*3)			100 mA or less		50 mA or less		5 to 50 mA	7 to 20 mA	50 mA or less	20 mA or less	5 to 50 mA	7 to 20 mA	7 to 10 mA	5 to 20 mA
Indicator	LED (Lit when ON)	LED (Lit when ON)	Red/green LED (Lit when ON)	Red/green LED (Lit when ON)	LED (Lit when ON)	Yellow LED (Lit when ON)	Red/green LED (Lit when ON)	Red/green LED (Lit when ON)	LED (Lit when ON)		No indicator lamp		LED (Lit when ON)			Red/green LED (Lit when ON)
Leakage current	≤ 1 mA at 100 VAC, ≤ 2 mA at 200 VAC	1 mA or less			10 μA or less				0 mA							1 mA or less
Weight g	1 m:33 3 m:87 5 m:142	1 m:18 3 m:49 5 m:80	1 m:33 3 m:87 5 m:142	1 m:18 3 m:49 5 m:80	1 m:18 3 m:49 5 m:80		1 m:33 3 m:87 5 m:142	1 m:18 3 m:49 5 m:80	1 m:18 3 m:49 5 m:80				1 m:33 3 m:87 5 m:142			1 m:61 3 m:166 5 m:272

*1 : Refer to Ending Page 1 for detailed switch specifications and dimensions.
*2 : Switches other than the above models, such as switches with connectors, are also available. Refer to Ending Page 1.
*3 : Max. load current: 20 mA at 25°C. The current is lower than 20 mA if the operating ambient temperature around the switch is higher than 25°C. (5 to 10 mA at 60°C)
*4 : Switch for AC magnetic field (T2YD/T2YDT) cannot be used in DC magnetic field.

Cylinder weight

(Unit: kg)

Item/mounting / Bore size (mm)	Product weight when stroke (S) = 0 mm						Switch weight		Additional weight per S = 100 mm
	Basic (00)	Axial foot (LB)	Flange (FA/FB)	Eye bracket (CA)	Clevis bracket (CB)	Trunnion (TA/TB/TC)	Switch	Mounting bracket	
ø125	7.22	8.72	10.52	10.22	10.32	10.62	Refer to the weight in the switch specifications.	0.028	1.54
ø140	9.35	11.35	14.75	13.15	13.35	12.55		0.030	1.78
ø160	12.35	15.45	19.25	17.35	17.65	18.75		0.034	2.22
ø180	16.75	21.25	28.75	24.15	24.65	24.85		0.038	2.96
ø200	22.78	28.48	36.48	32.28	32.48	34.58		0.040	3.54
ø250	40.51	48.91	66.41	64.51	59.01	69.21		0.045	5.38

(Example) Product weight of SCS2-LH-LB-125B-300-TOH-D
- ● Product weight for S = 0 mm stroke ····· 8.72 kg
- ● Additional weight for S = 300 mm stroke ····· $1.54 \times \frac{300}{100} = 4.62$ kg
- ● Weight of 2 switches (T0H-D) ····· 0.018 x 2 = 0.036 kg
- ● Product weight with 2 switch brackets ··· 0.028 x 2 = 0.056 kg
- ● Product weight ····· 8.72 + 4.62 + 0.036 + 0.056 = 13.432 kg

Theoretical thrust table

(Unit: N)

Bore size (mm)	Operating direction	Working pressure MPa										
		0.1	0.15	0.2	0.3	0.4	0.5	0.6	0.7	0.8	0.9	1.0
ø125	Push	1.23×10^3	1.84×10^3	2.45×10^3	3.68×10^3	4.91×10^3	6.14×10^3	7.36×10^3	8.59×10^3	9.82×10^3	1.10×10^4	1.23×10^4
	Pull	1.15×10^3	1.72×10^3	2.29×10^3	3.44×10^3	4.59×10^3	5.73×10^3	6.88×10^3	8.03×10^3	9.17×10^3	1.03×10^4	1.15×10^4
ø140	Push	1.54×10^3	2.31×10^3	3.08×10^3	4.62×10^3	6.16×10^3	7.70×10^3	9.24×10^3	1.08×10^4	1.23×10^4	1.39×10^4	1.54×10^4
	Pull	1.46×10^3	2.19×10^3	2.92×10^3	4.38×10^3	5.84×10^3	7.29×10^3	8.75×10^3	1.02×10^4	1.17×10^4	1.31×10^4	1.46×10^4
ø160	Push	2.01×10^3	3.02×10^3	4.02×10^3	6.03×10^3	8.04×10^3	1.01×10^4	1.21×10^4	1.41×10^4	1.61×10^4	1.81×10^4	2.01×10^4
	Pull	1.88×10^3	2.83×10^3	3.77×10^3	5.65×10^3	7.54×10^3	9.42×10^3	1.13×10^4	1.32×10^4	1.51×10^4	1.70×10^4	1.88×10^4
ø180	Push	2.54×10^3	3.82×10^3	5.09×10^3	7.63×10^3	1.02×10^4	1.27×10^4	1.53×10^4	1.78×10^4	2.04×10^4	2.29×10^4	2.54×10^4
	Pull	2.39×10^3	3.58×10^3	4.77×10^3	7.16×10^3	9.54×10^3	1.19×10^4	1.43×10^4	1.67×10^4	1.91×10^4	2.15×10^4	2.39×10^4
ø200	Push	3.14×10^3	4.71×10^3	6.28×10^3	9.42×10^3	1.26×10^4	1.57×10^4	1.88×10^4	2.20×10^4	2.51×10^4	2.83×10^4	3.14×10^4
	Pull	2.95×10^3	4.42×10^3	5.89×10^3	8.84×10^3	1.18×10^4	1.47×10^4	1.77×10^4	2.06×10^4	2.36×10^4	2.65×10^4	2.95×10^4
ø250	Push	4.91×10^3	7.36×10^3	9.82×10^3	1.47×10^4	1.96×10^4	2.45×10^4	2.95×10^4	3.44×10^4	3.93×10^4	4.42×10^4	4.91×10^4
	Pull	4.63×10^3	6.94×10^3	9.25×10^3	1.39×10^4	1.85×10^4	2.31×10^4	2.78×10^4	3.24×10^4	3.70×10^4	4.16×10^4	4.63×10^4

How to order

No switch (without magnet for switch)

SCS2-H - LB - 125 ( ) B - 50 ———— J Y

With switch (built-in magnet for switch)

SCS2-LH - LB - 125 ( ) B - 50 - T0H - R - J Y

Ⓐ Mounting *1

Ⓑ Bore size

Ⓒ Port thread

Ⓓ Cushion

Ⓔ Stroke

Ⓕ Switch model No.

Ⓖ Switch quantity *3

Ⓗ Option *4

*5

Ⓘ Accessory *6

Code	Description
Ⓐ Mounting	
00	Basic
LB	Axial foot
FA	Rod side flange
FB	Head side flange
CA	Eye bracket
CB	Clevis bracket (pin and snap ring included)
TC	Intermediate trunnion
TA	Rod side trunnion
TB	Head side trunnion

Ⓑ Bore size (mm)	
125	ø125
140	ø140
160	ø160
180	ø180
200	ø200
250	ø250

Ⓒ Port thread	
Blank	Rc thread
N	NPT thread (made-to-order product)
G	G thread (made-to-order product)

Ⓓ Cushion	
B	Both sides cushioned
R	Rod side cushioned
H	Head side cushioned
N	Without cushion

Ⓔ Stroke (mm)

Bore size	Stroke *2	Custom stroke
ø125 to ø160	**20 to 800**	**In 1 mm increments**
ø180	**20 to 900**	
ø200	**20 to 1000**	
ø250	**20 to 1200**	

Ⓕ Switch model No.

Axial lead wire	Radial lead wire	Contact	Voltage AC	Voltage DC	Indicator	Lead wire
T0H*	**T0V***	Reed	●	●	1-color LED	2-wire
T5H*	**T5V***	Reed	●	●	No indicator lamp	2-wire
T8H*	**T8V***	Reed	●	●	1-color LED	2-wire
T1H*	**T1V***	Proximity	●		1-color LED	2-wire
T2H*	**T2V***	Proximity		●	1-color LED	2-wire
T3H*	**T3V***	Proximity		●	1-color LED	3-wire
T3PH*	**T3PV***	Proximity		●	1-color LED (PNP output)	3-wire
T2WH*	**T2WV***	Proximity		●	2-color LED	2-wire
T2YH*	**T2YV***	Proximity		●	2-color LED	2-wire
T3WH*	**T3WV***	Proximity		●	2-color LED	3-wire
T3YH*	**T3YV***	Proximity		●	2-color LED	3-wire
T2YD*	**-**	Proximity		●	2-color LED AC magnetic field	2-wire
T2YDT*	**-**	Proximity		●	2-color LED AC magnetic field	2-wire
T2JH*	**T2JV***	Proximity		●	1-color LED off-delay	2-wire

*** Lead wire length**	
Blank	1 m (standard)
3	3 m (option)
5	5 m (option)

Ⓖ Switch quantity	
R	1 on rod side
H	1 on head side
D	2
T	3
4	4

Ⓗ Option

		Max. ambient temp.	Instantaneous ambient temp
C2	With cushion section check valve		
J	Bellows	100°C	200°C
L	Bellows	250°C	400°C
M	Piston rod material (stainless steel)		
Blank	Cushion needle position (standard)	Standard	
R	Cushion needle position R	T R	
S	Cushion needle position S	S	
T	Cushion needle position T		
P6	Copper and PTFE free (made to order)		

Ⓘ Accessory	
I	Rod eye
Y	Rod clevis (pin and snap ring included)
B1	Eye bracket
B2	Clevis bracket (pin and snap ring included)

Made-to-order product code	***7**
-SO92	SCS-LH compatible mounting dimensions

⚠ Precautions for model No. selection

*1 : Supporting hole is available custom made for ø125 to 160 only. Contact CKD for details about dimensions.
*2 : Refer to page 662 for the min. stroke with switch.
*3 : When selecting TA or TB as mounting, the number of switches is limited to "H" (1 on head side) for TA, and "R" (1 on rod side) for TB.
*4 : The instantaneous max. temperature is the temperature when sparks, cutting chips, etc., instantaneously contact the bellows.
*5 : Check the figures below for the cushion needle position indication.
*6 : "I" and "Y" cannot be selected together.
*7 : Refer to page 667 for details.

[Example of model No.]

SCS2-LH-LB-125B-50-T0H-R-JY

Model: Large bore size cylinder, double acting/low hydraulic with switch

Ⓐ Mounting : Axial foot
Ⓑ Bore size : ø125 mm
Ⓒ Port thread : Rc thread
Ⓓ Cushion : With two-sided air cushion
Ⓔ Stroke : 50 mm
Ⓕ Switch model No. : Proximity T0H switch, lead wire 1 m
Ⓖ Switch quantity : 1 on rod side
Ⓗ Option : Bellows material for max. ambient temperature 100°C
Ⓘ Accessory : Rod clevis

Cushion needle position

(Needle position with the port on the top when viewed from the rod end)

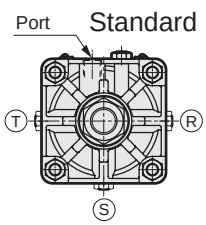

Certified class 2 pressure vessel stroke

Bore size	Stroke
ø200	946 or more
ø250	752 or more

How to order switch

● Switch body + mounting bracket set

SCS2-LN - T0H - 125

- 125: Bore size (Item Ⓑ on page 664)
- T0H: Switch model No. (Item Ⓕ on page 664)

● Switch body only

SW - T0H

- T0H: Switch model No. (Item Ⓕ on page 664)

● Mounting bracket set

SCS2-LN - TS - 125

- 125: Bore size (Item Ⓑ on page 664)
- TS: Mounting bracket

Mounting bracket	
TS	T-switch
T	T2YD switch

Internal structure and parts list

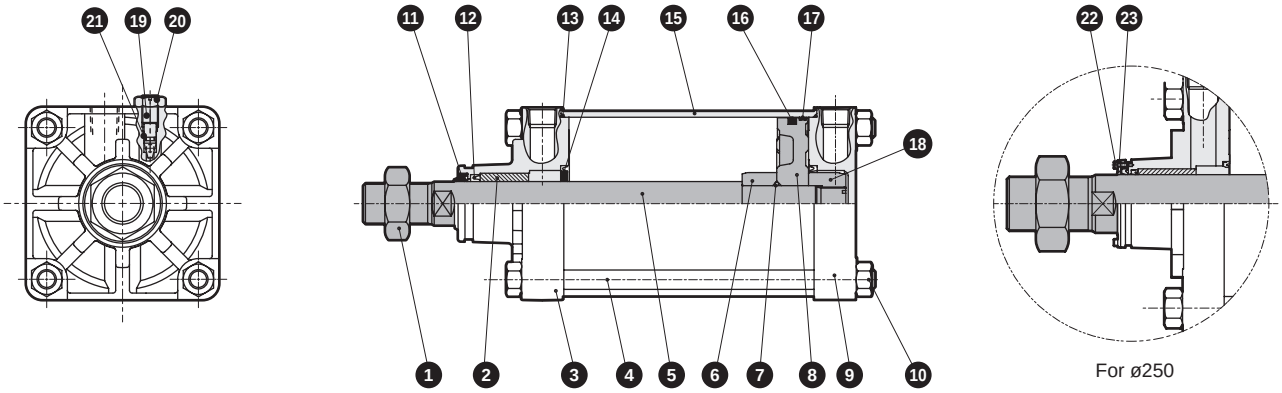

For ø250

No.	Part name	Material	Remarks	No.	Part name	Material	Remarks
1	Hexagon nut	Steel	Zinc chromate	13	Cylinder gasket	Nitrile rubber	
2	Bush	Iron-copper oil-impregnated bearing alloy		14	Cushion packing	Nitrile rubber/steel	
3	Rod cover	Aluminum alloy casting	Chromate	15	Cylinder tube	Aluminum alloy	Hard alumite
4	Tie rod	Steel	Zinc chromate	16	Piston packing	Nitrile rubber	
5	Piston rod	Steel	Industrial chrome plating	17	Wear ring	Polyacetal resin	
6	Cushion ring A	Steel	Zinc chromate	18	Cushion ring B	Steel	Zinc chromate
7	Piston gasket	Nitrile rubber		19	Cushion needle	Copper alloy (ø125 to ø180)	
8	Piston	Aluminum alloy casting				Steel (ø200, 250)	Zinc chromate
9	Head cover	Aluminum alloy casting	Chromate	20	Hexagon nut	Steel	Zinc chromate
10	Hexagon nut	Steel	Zinc chromate	21	Needle gasket	Nitrile rubber	
11	Dust wiper	Nitrile rubber		22	Scraper retainer plate	Steel	Manganese phosphate
12	Rod packing	Nitrile rubber		23	Hexagon socket head cap screw	Steel	Black finish

Repair parts list

Bore size (mm)	Kit No.	Repair parts No.
ø125	SCS2-H-125K	11 12 13 14 16 17 21
ø140	SCS2-H-140K	
ø160	SCS2-H-160K	
ø180	SCS2-H-180K	
ø200	SCS2-H-200K	
ø250	SCS2-H-250K	

SCP*3
CMK2
CMA2
SCM
SCG
SCA2
SCS2
CKV2
CAV2/COVP/N2
SSD2
SSG
SSD
CAT
MDC2
MVC
SMG
MSD/MSDG
FC*
STK
SRL3
SRG3
SRM3
SRT3
MRL2
MRG2
SM-25
ShkAbs
FJ
FK
Spd Contr
Ending

Dimensions

● Basic (00)

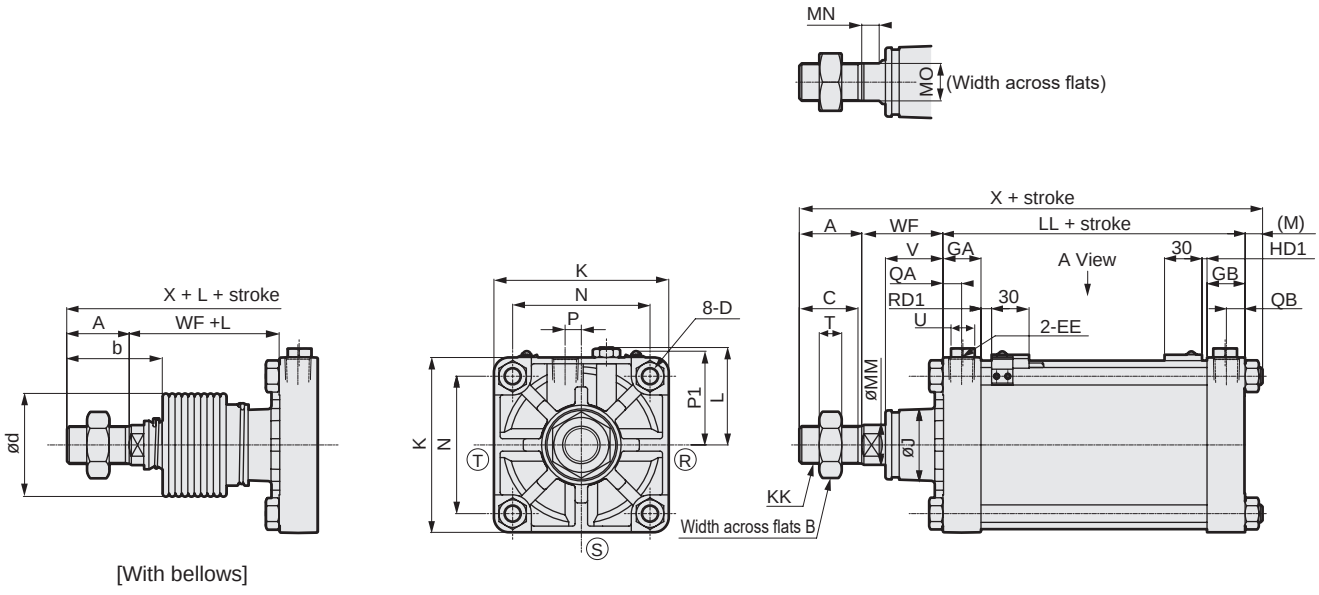

● 2-color LED with strong magnetic field proof switch

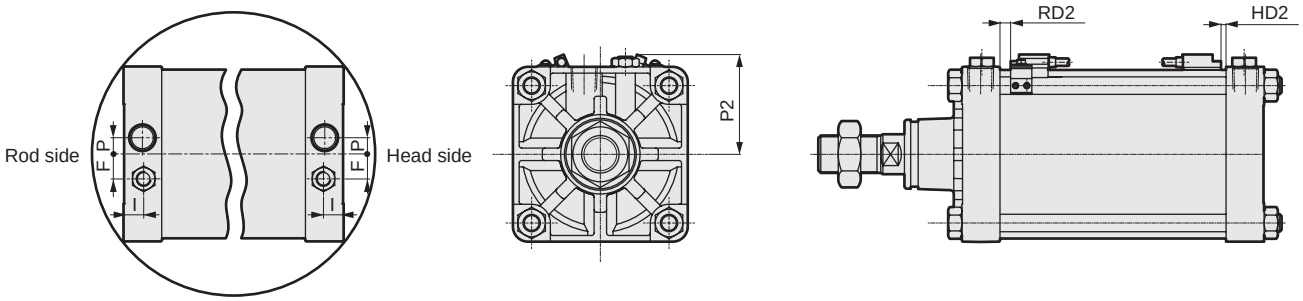

Port position diagram (A View)

RD: Rod side max. sensitivity position
HD: Head side max. sensitivity position

*1: Ⓡ, Ⓢ and Ⓣ indicate the cushion needle position.
*2: L dimensions below decimal point are rounded up.

Code	Basic (00) Basic dimensions																					
Bore size (mm)	A	B	C	D	EE	GA	GB	F	I	J	K	KK	L	LL	M	MM	MN	MO	N	P	QA	QB
ø125	50	46	47	M14x1.5	Rc1/2	30.5	30.5	20	16	57	140	M30x1.5	78 to 82	92	13.5	32	15	27	110	13	15	15
ø140	50	46	47	M14x1.5	Rc3/4	34.5	34.5	20	20	57	157	M30x1.5	86.5 to 91	103	13.5	32	15	27	124	15	17	17
ø160	56	55	53	M16x1.5	Rc3/4	34.5	34.5	24	20	62	177	M36x1.5	96.5 to 101	106	15.5	40	15	36	142	15	17	17
ø180	63	60	60	M18x1.5	Rc3/4	34.5	34.5	24	20	68	200	M40x1.5	108 to 112	110	17.5	45	17	41	160	15	17	17
ø200	72	70	69	M20x1.5	Rc3/4	37.5	37.5	24	20.5	75	220	M45x1.5	120.5 to 129	123	18.5	50	20	46	175	20	18	18
ø250	88	85	84	M24x1.5	Rc1	42.5	42.5	24	20.5	93	274	M56x2	147.5 to 156	141	21.5	60	22	55	216	22	21	21

Code						With bellows			With switch		T0,T5,T2,T3		T2W,T3W		T2Y,T3Y,T2YD,T1,T2J		T8	
Bore size (mm)	T	U	V	WF	X	b	d	L	P1	P2	RD1	HD1	RD1	HD1	RD2	HD2	RD2	HD2
ø125	18	19	45.5	65	220.5	74	75	(Stroke/4.55) + 11	76	80	8.5	4.0	10.5	5.5	7.5	2.5	2.5	0.0
ø140	18	19	45.5	67	233.5	74	75	(Stroke/4.55) + 9	82	86	8.5	7.0	10.5	8.5	7.5	5.5	2.5	0.5
ø160	21	19	48	71	248.5	82	80	(Stroke/5.15) + 9	90	95	10.5	8.0	12.5	10.0	9.5	7.0	4.5	1.5
ø180	24	19	53	78	268.5	91	90	(Stroke/5.15) + 9	98	103	13.0	9.5	14.5	11.5	11.5	8.5	6.5	3.5
ø200	27	24	60	88	301.5	102	95	(Stroke/5.30) + 9	106	111	17.5	13.0	19.0	15.0	16.0	12.0	11.0	7.0
ø250	34	24	64	94	344.5	120	120	(Stroke/6.40) + 9	126	130	18.5	19.0	20.5	20.5	17.5	17.5	12.5	12.5

Note: Dimensions of other mounting are the same as those of double acting SCS2 Series. Refer to pages 631 to 638. SCS2-LH (with switch) is not dimensionally compatible with SCS-LH (with switch). (All lengths shorter) If you need the same dimensions, use the dimensionally compatible mounting on the next page.

* For the dimensions of the accessories, refer to page 639.

Introduction of custom order products

■ SCS-LH compatible mounting dimensions

How to order

When placing an order, add "-SO92" at the end of the model No.

Dimensions

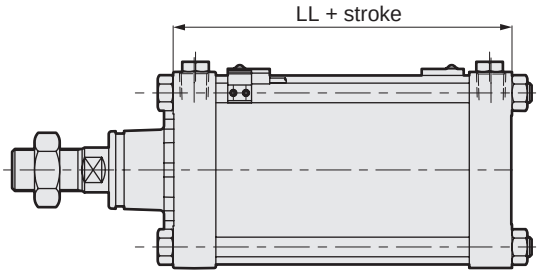

Code / Bore size (mm)	Dimensions table LL
ø125	111.5
ø140	122.5
ø160	122.5
ø180	124.5
ø200	143.5
ø250	

*1: The center trunnion should be installed at the middle point between the covers.
*2: Refer to the right table for LL mentioned in the dimensions above.

Large bore size cylinder
Double acting/rubber scraper

SCS2-G Series

● Bore size: ø125/ø140/ø160/ø180/ø200/ø250

JIS symbol

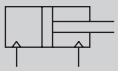

RoHS

* Made-to-order product.

Specifications

Item		SCS2-G (rubber scraper)					
Bore size	mm	ø125	ø140	ø160	ø180	ø200	ø250
Actuation		Double acting					
Working fluid		Compressed air					
Max. working pressure	MPa	1.0 (≈150 psi, 10 bar)					
Min. working pressure	MPa	0.05 (≈7.3 psi, 0.5 bar)					
Proof pressure	MPa	1.6 (≈230 psi, 16 bar)					
Ambient temperature	°C	-5 (23°F) to 60 (140°F) (no freezing)					
Port size		Rc1/2	Rc3/4				Rc1
Stroke tolerance	mm	$^{+1.0}_{0}$ (to 300), $^{+1.4}_{0}$ (to 1000), $^{+1.8}_{0}$ (to 1200)					
Working piston speed	mm/s	20 to 1000 (Operate within the absorbed energy.)					
Cushion		Air cushion					
Effective air cushion length	mm	21.6	21.6	21.6	21.6	26.6	26.6
Lubrication		Required (use turbine oil class 1 ISO VG32 for lubrication)					
Allowable absorbed energy J	Cushioned	63.5	91.5	116	152	233	362
	Without cushion	0.371	0.386	0.386	0.958	1.08	2.32
		Without any cushion, this product cannot absorb large energy generated by an external load. We recommend using an external shock absorber.					

Stroke

Bore size (mm)	Standard stroke (mm)	Max. stroke (mm)	Min. stroke (mm)	Trunnion min. stroke (mm)
ø125	50/75/100/150/200/250/300	800	1	23
ø140				25
ø160				27
ø180		900		28
ø200		1000		28
ø250		1200		28

*1: The custom stroke is available in 1 mm increments.

*2: If the max. stroke is exceeded, product specifications may not be met, depending on operating conditions. Contact CKD in this case.

Cylinder weight

(Unit: kg)

Item/mounting / Bore size (mm)	Product weight when stroke (S) = 0 mm						Additional weight per S = 100mm
	Basic (00)	Axial foot (LB)	Flange (FA/FB)	Eye bracket (CA)	Clevis bracket (CB)	Trunnion (TA/TB/TC)	
ø125	7.22	8.72	10.52	10.22	10.32	10.62	1.54
ø140	9.35	11.35	14.75	13.15	13.35	12.55	1.78
ø160	12.35	15.45	19.25	17.35	17.65	18.75	2.22
ø180	16.75	21.25	28.75	24.15	24.65	24.85	2.96
ø200	22.78	28.48	36.48	32.28	32.48	34.58	3.54
ø250	40.51	48.91	66.41	64.51	59.01	69.21	5.38

(Example) Product weight of SCS2-G-LB-125B-300

- ● Product weight for S = 0 mm stroke ····· 8.72 kg
- ● Additional weight for S = 300 mm stroke ····· $1.54 \times \frac{300}{100} = 4.62$ kg
- ● Product weight ····· 8.72 + 4.62 = 13.34 kg

Theoretical thrust table

(Unit: N)

Bore size (mm)	Operating direction	Working pressure MPa											
		0.05	0.1	0.15	0.2	0.3	0.4	0.5	0.6	0.7	0.8	0.9	1.0
ø125	Push	6.14×10^{2}	1.23×10^{3}	1.84×10^{3}	2.45×10^{3}	3.68×10^{3}	4.91×10^{3}	6.14×10^{3}	7.36×10^{3}	8.59×10^{3}	9.82×10^{3}	1.10×10^{4}	1.23×10^{4}
	Pull	5.73×10^{2}	1.15×10^{3}	1.72×10^{3}	2.29×10^{3}	3.44×10^{3}	4.59×10^{3}	5.73×10^{3}	6.88×10^{3}	8.03×10^{3}	9.17×10^{3}	1.03×10^{4}	1.15×10^{4}
ø140	Push	7.70×10^{2}	1.54×10^{3}	2.31×10^{3}	3.08×10^{3}	4.62×10^{3}	6.16×10^{3}	7.70×10^{3}	9.24×10^{3}	1.08×10^{4}	1.23×10^{4}	1.39×10^{4}	1.54×10^{4}
	Pull	7.29×10^{2}	1.46×10^{3}	2.19×10^{3}	2.92×10^{3}	4.38×10^{3}	5.84×10^{3}	7.29×10^{3}	8.75×10^{3}	1.02×10^{4}	1.17×10^{4}	1.31×10^{4}	1.46×10^{4}
ø160	Push	1.01×10^{3}	2.01×10^{3}	3.02×10^{3}	4.02×10^{3}	6.03×10^{3}	8.04×10^{3}	1.01×10^{4}	1.21×10^{4}	1.41×10^{4}	1.61×10^{4}	1.81×10^{4}	2.01×10^{4}
	Pull	9.42×10^{2}	1.88×10^{3}	2.83×10^{3}	3.77×10^{3}	5.65×10^{3}	7.54×10^{3}	9.42×10^{3}	1.13×10^{4}	1.32×10^{4}	1.51×10^{4}	1.70×10^{4}	1.88×10^{4}
ø180	Push	1.27×10^{3}	2.54×10^{3}	3.82×10^{3}	5.09×10^{3}	7.63×10^{3}	1.02×10^{4}	1.27×10^{4}	1.53×10^{4}	1.78×10^{4}	2.04×10^{4}	2.29×10^{4}	2.54×10^{4}
	Pull	1.19×10^{3}	2.39×10^{3}	3.58×10^{3}	4.77×10^{3}	7.16×10^{3}	9.54×10^{3}	1.19×10^{4}	1.43×10^{4}	1.67×10^{4}	1.91×10^{4}	2.15×10^{4}	2.39×10^{4}
ø200	Push	1.57×10^{3}	3.14×10^{3}	4.71×10^{3}	6.28×10^{3}	9.42×10^{3}	1.26×10^{4}	1.57×10^{4}	1.88×10^{4}	2.20×10^{4}	2.51×10^{4}	2.83×10^{4}	3.14×10^{4}
	Pull	1.47×10^{3}	2.95×10^{3}	4.42×10^{3}	5.89×10^{3}	8.84×10^{3}	1.18×10^{4}	1.47×10^{4}	1.77×10^{4}	2.06×10^{4}	2.36×10^{4}	2.65×10^{4}	2.95×10^{4}
ø250	Push	2.45×10^{3}	4.91×10^{3}	7.36×10^{3}	9.82×10^{3}	1.47×10^{4}	1.96×10^{4}	2.45×10^{4}	2.95×10^{4}	3.44×10^{4}	3.93×10^{4}	4.42×10^{4}	4.91×10^{4}
	Pull	2.31×10^{3}	4.63×10^{3}	6.94×10^{3}	9.25×10^{3}	1.39×10^{4}	1.85×10^{4}	2.31×10^{4}	2.78×10^{4}	3.24×10^{4}	3.70×10^{4}	4.16×10^{4}	4.63×10^{4}

How to order

No switch (without magnet for switch)

SCS2-G - LB - 125 ( ) B - 50 - M Y

- Ⓐ Mounting *1
- Ⓑ Bore size
- Ⓒ Port thread
- Ⓓ Cushion
- Ⓔ Stroke
- Ⓕ Option *2
- Ⓖ Accessory

Code	Description
Ⓐ Mounting	
00	Basic
LB	Axial foot
FA	Rod side flange
FB	Head side flange
CA	Eye bracket
CB	Clevis bracket (pin and snap ring included)
TC	Intermediate trunnion
TA	Rod side trunnion
TB	Head side trunnion
Ⓑ Bore size (mm)	
125	ø125
140	ø140
160	ø160
180	ø180
200	ø200
250	ø250
Ⓒ Port thread	
Blank	Rc thread
N	NPT thread (made-to-order product)
G	G thread (made-to-order product)
Ⓓ Cushion	
B	Both sides cushioned
R	Rod side cushioned
H	Head side cushioned
N	Without cushion

Ⓔ Stroke (mm)

Bore size	Stroke	Custom stroke
ø125 to ø160	**1 to 800**	**In 1 mm increments**
ø180	**1 to 900**	
ø200	**1 to 1000**	
ø250	**1 to 1200**	

Ⓕ Option

		Max. ambient temp.	Instantaneous ambient temp
C2	With cushion section check valve		
J	Bellows	100°C	200°C
L	Bellows	250°C	400°C
M	Piston rod material (stainless steel)		
Blank	Cushion needle position (standard)		
R	Cushion needle position R		
S	Cushion needle position S		
T	Cushion needle position T		
P6	Copper and PTFE free (made to order)		

*3

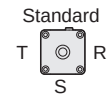

Ⓖ Accessory

I	Rod eye
Y	Rod clevis (pin and snap ring included)
B1	Eye bracket
B2	Clevis bracket (pin and snap ring included)

⚠ Precautions for model No. selection

*1: Supporting hole is available custom made for ø125 to 160 only. Contact CKD for details about dimensions.
*2: The instantaneous max. temperature is the temperature when sparks, cutting chips, etc., instantaneously contact the bellows.
*3: Check the figures below for the cushion needle position indication.

[Example of model No.]

SCS2-G-LB-125B-50-JY

Model: Large bore size cylinder, rubber scraper

- Ⓐ Mounting : Axial foot
- Ⓑ Bore size : ø125 mm
- Ⓒ Port thread : Rc thread
- Ⓓ Cushion : Both sides cushioned
- Ⓔ Stroke : 50 mm
- Ⓕ Option : Bellows material for max. ambient temperature 100°C
- Ⓖ Accessory : Rod clevis

Cushion needle position

(Needle position with the port on the top when viewed from the rod end)

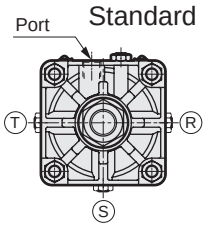

Certified class 2 pressure vessel stroke

Bore size	Stroke
ø200	946 or more
ø250	752 or more

Internal structure and parts list

● Standard
SCS2-G

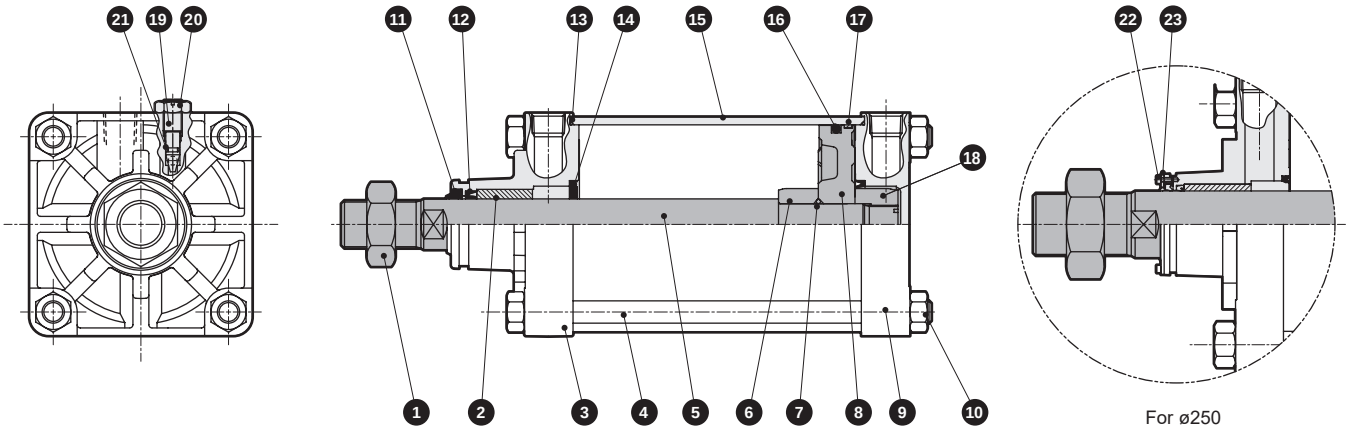

Note: 14, 19, 20 and 21 are not required for the type without cushion.

No.	Part name	Material	Remarks	No.	Part name	Material	Remarks
1	Hexagon nut	Steel	Zinc chromate	13	Cylinder gasket	Nitrile rubber	
2	Bush	Iron-copper oil-impregnated bearing alloy		14	Cushion packing	Nitrile rubber/steel	
3	Rod cover	Aluminum alloy casting	Chromate	15	Cylinder tube	Aluminum alloy	Hard alumite
4	Tie rod	Steel	Zinc chromate	16	Piston packing	Nitrile rubber	
5	Piston rod	Steel	Industrial chrome plating	17	Wear ring	Polyacetal resin	
6	Cushion ring A	Steel	Zinc chromate	18	Cushion ring B	Steel	Zinc chromate
7	Piston gasket	Nitrile rubber		19	Cushion needle	Copper alloy (ø125 to ø180)	
8	Piston	Aluminum alloy casting				Steel (ø200, 250)	Zinc chromate
9	Head cover	Aluminum alloy casting	Chromate	20	Hexagon nut	Steel	Zinc chromate
10	Hexagon nut	Steel	Zinc chromate	21	Needle gasket	Nitrile rubber	
11	Dust wiper	Nitrile rubber/steel		22	Hexagon socket head cap screw	Steel (black finish)	ø250 only
12	Rod packing	Nitrile rubber		23	Retainer plate	Steel (Manganese phosphate)	ø250 only

Repair parts list

Bore size (mm)	Kit No.	Repair parts No.
ø125	SCS2-G-125K	11 12 13 14 16 17 21
ø140	SCS2-G-140K	
ø160	SCS2-G-160K	
ø180	SCS2-G-180K	
ø200	SCS2-G-200K	
ø250	SCS2-G-250K	

Dimensions

Same as double acting/standard single rod SCS2. Refer to pages 630 to 638.
However, because the dust wiper protrudes, the MN dimension of ø125 and ø140 is 2 mm shorter.

Pneumatic components

Safety Precautions

Be sure to read this section before use.

Refer to Intro Page 73 for general information of the cylinder, and to Intro Page 80 for general information of the cylinder switch.

Product-specific cautions: Large bore size cylinder: SCS2 Series

Design/selection

1. Common

CAUTION

■ Certification of class 2 pressure vessel

According to regulations of the Ministry of Health, Labour and Welfare, the following cylinders should be certified by the Japan Boilers Association.

(1) Cylinders with a rated pressure exceeding 0.2 MPa and cylinder capacity exceeding 0.04 m^3.

(2) Cylinders with a rated pressure exceeding 0.2 MPa, bore size exceeding 200 mm and stroke exceeding 1000 mm.

$$V=\frac{D^2xSx3.14}{4x10^9}$$

V: Cylinder capacity (m^3)
D: Bore size (mm)
S: Body length (cylinder tube length) (mm)

■ With cushion section check valve (C2)

The larger the load, the greater the delay in the starting time of the cylinder will be. To shorten the starting time, use the cushion section check valve (C2).

■ Heat resistant (SCS2-T)

Consult CKD if the ambient temperatures of different components vary drastically, such as when only the piston rod is inserted into a high temperature furnace.

Mounting, installation and adjustment

1. Stroke adjustable SCS2-P

CAUTION

■ If the stroke is adjusted, the cushion cannot function.

2. Heat resistant SCS2-T

CAUTION

■ Magnet is not built in.

3. Low hydraulic SCS2-H

CAUTION

■ This product is a pneumatic cylinder which enables the use of hydraulic fluid as its working fluid.
Not compliant with JIS standards on activation and leak inspection for hydraulic cylinders.

MEMO

Cylinder with valve

	Page
Small cylinder with valve **CKV2** Series	675
Cylinder with valve **CAV2/COV$^{P}_{N}$2** Series	703

CKV2

Small cylinder with valve

ø20/ø25/ø32/ø40

With valve

Overview

Small bore size (ø20 to ø40) standard cylinders with integrated high performance and power-efficient four-way valve enabled by compactly integrating the valve into CMK2 Series.

Features

Easy to add a switch

The cylinder is equipped with a magnet as standard so that you can easily add a switch by simply mounting the desired sensor switch.

Common exhaust

Common exhaust keeps the ambient environment clean.

Work and operation centralized on the top surface

Piping, wiring, speed adjustment and operation are all accessible on the top surface. Installation, operation and maintenance are easy.

Easy speed adjustment

Speed adjustment is easy with the speed adjustment needle. The mechanism to lock the adjusted speed is built into the unit.

High corrosion resistance and long service life

Stainless steel tube used. Highly corrosion resistant and long-lasting.

Easy to switch between push when energized and pull when energized

CONTENTS

Series variation	676
Product introduction	676
Variation and option combination selection table	678
● Double acting/single rod (CKV2)	680
● Double acting/rotation-stop (CKV2-M)	692
CKV2 Series common accessory dimensions	699
⚠ Safety precautions	700

The cylinder switches T2YH, T2YV, T3YH, and T3YV are scheduled for end of production at the end of December 2023.

Series variation

Small cylinder with valve CKV2 Series

Variation	Model No. JIS symbol	Bore size (mm)	Standard stroke (mm) 25	50	75	100	150	200	Min. stroke (mm)	Max. stroke (mm)	Custom stroke (per mm)	Mounting Basic 00	Axial foot LB	
Double acting/ single rod	CKV2 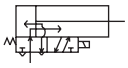	ø20/ø25/ ø32/ø40	●	●	●	●	●	●	5	750	1	●	●	
Double acting/ rotation-stop	CKV2-M 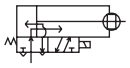	ø20/ø25/ ø32/ø40	●	●	●	●	●	●	5	750	1	●	●	

Product introduction

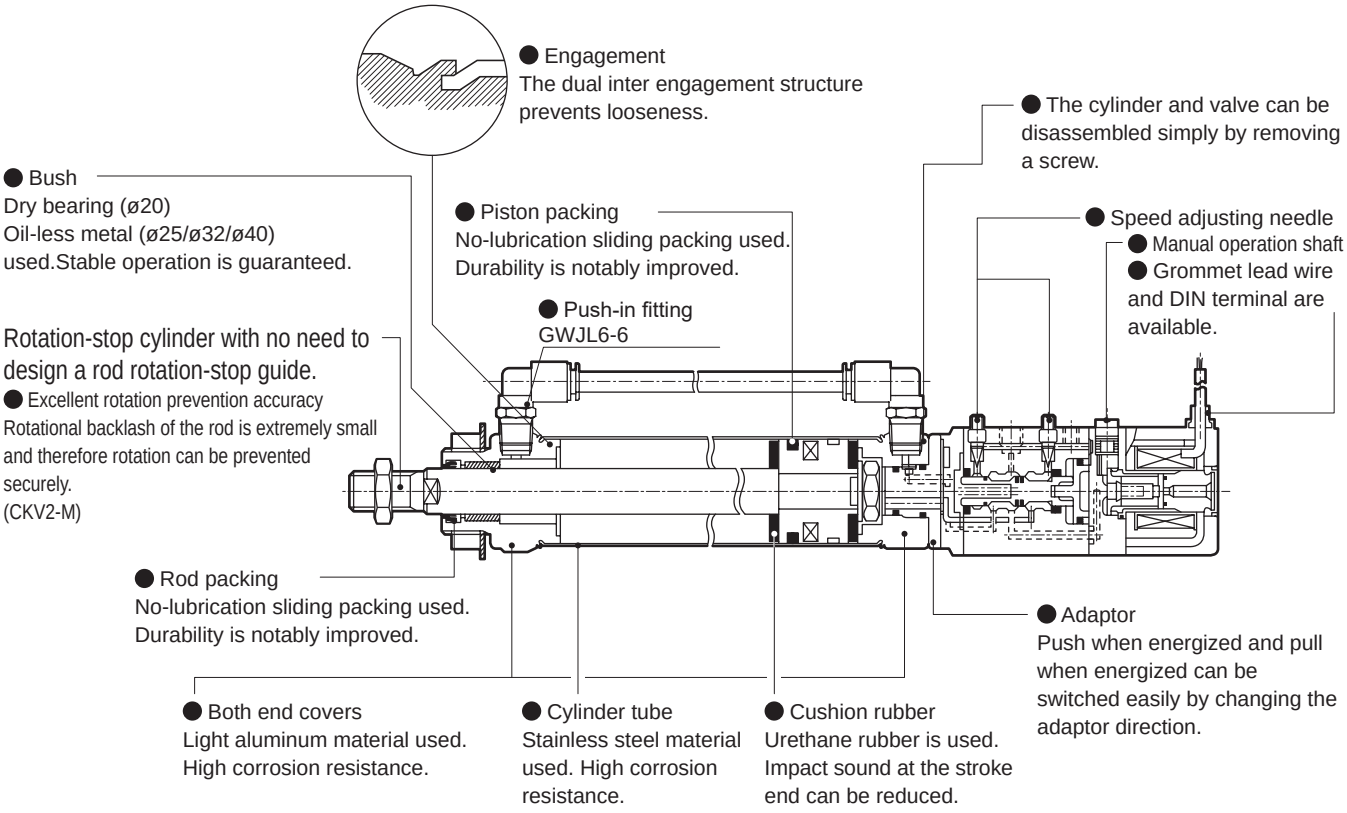

●: Standard, ◎: Option, ○: Made to order, ▒ : Not available

Mounting			Option								Accessory				Switch	Page
Rod side flange	Rod side trunnion	Head side trunnion	Bellows (100°C)	Bellows (250°C)	Piston rod material (stainless steel)	With silencer	With surge suppressor	With indicator lamp	Pull when energized	Copper and PTFE free	Rod eye	Rod clevis	Eye bracket	Clevis bracket clevis		
FA	TA	TB	J	L	M	W	G	E	X	P6	I	Y	B2	B3		
●	●	●	◎	◎	◎	◎	◎	◎	◎	○	◎	◎	◎	◎	◎	680
●	●	●	◎	◎	◎	◎	◎	◎	◎	▒	◎	◎	◎	◎	◎	692

SCP*3
CMK2
CMA2
SCM
SCG
SCA2
SCS2
CKV2
CAV2/COVP/N2
SSD2
SSG
SSD
CAT
MDC2
MVC
SMG
MSD/MSDG
FC*
STK
SRL3
SRG3
SRM3
SRT3
MRL2
MRG2
SM-25
ShkAbs
FJ
FK
Spd Contr
Ending

Variation and option combination selection table

●: Standard
◎: Option
○: Available (made-to-order product)
△: Available depending on conditions (Contact CKD.)
x: Not available

Category		Category	Variation			Port thread			Wiring		Option									
			Double acting basic	Rotation-stop		NPT	G		Grommet	DIN terminal box	Polyolefin with bellows	Silicone rubber with bellows	Piston rod material stainless steel	Specify piston rod end form	Copper and PTFE free	With silencer	With surge suppressor	With neon lamp	Pull when energized	
		Code	None	M		N	G		None	U	J	L	M	N	P6	W	G	E	X	
Variation	Double acting basic	Blank				○	○		●	◎	◎	◎	◎	◎	○	◎	◎	◎	◎	
Variation	Rotation-stop	M				○	○		●	◎	◎	◎	*2	◎	△	◎	◎	◎	◎	
Port thread	NPT	N					×		○	○	○	○	○	○	○	○	○	○	○	
Port thread	G	G							○	○	○	○	○	○	○	○	○	○	○	
Wiring	Grommet	Blank								×	◎	◎	◎	◎	◎	◎	◎	×	◎	
Wiring	DIN terminal box	U									◎	◎	◎	◎	◎	◎	◎	◎	◎	
Option	Polyolefin with bellows	J										×	◎	◎	◎	◎	◎	◎	◎	
Option	Silicone rubber with bellows	L											◎	◎	◎	◎	◎	◎	◎	
Option	Piston rod material stainless steel	M												◎	◎	◎	◎	◎	◎	
Option	Specify piston rod end form	N													◎	◎	◎	◎	◎	
Option	Copper and PTFE free	P6														◎	◎	◎	◎	
Option	With silencer	W															◎	◎	◎	
Option	With surge suppressor	G																◎	◎	
Option	With neon lamp	E																	◎	
Option	Pull when energized	X																		
Accessory	Cylinder switch	Listed separately	◎	◎		○	○		◎	◎	◎	◎	◎	◎	◎	◎	◎	◎	◎	
Accessory	Rod eye	I	◎	◎		○	○		◎	◎	◎	◎	◎	*1	◎	◎	◎	◎	◎	
Accessory	Rod clevis	Y	◎	◎		○	○		◎	◎	◎	◎	◎	*1	◎	◎	◎	◎	◎	
Accessory	B2 bracket	B2	◎	◎		○	○		◎	◎	◎	◎	◎	◎	◎	◎	◎	◎	◎	
Accessory	B3 bracket	B3	◎	◎		○	○		◎	◎	◎	◎	◎	◎	◎	◎	◎	◎	◎	

*1: The combinations above do not apply if the thread size of the end of the piston rod is different. Contact CKD separately.
*2: Rotation-stop piston rod is stainless steel.
If option M (piston rod material stainless steel) is selected, the rod nut will also be stainless steel.

[How to order]

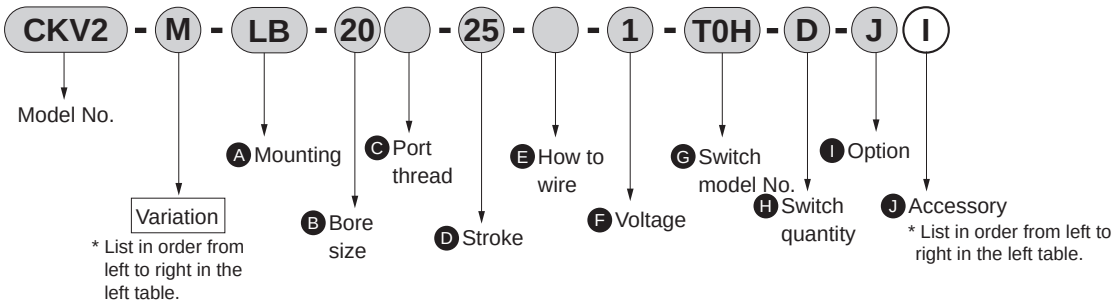

Model No. : Small cylinder with valve

● Variation: Double acting, rotation-stop

A	Mounting	: Axial foot
B	Bore size	: ø20 mm
C	Port thread	: Rc thread
D	Stroke	: 25 mm
E	How to wire	: Grommet
F	Voltage	: 100 VAC
G	Switch model No.	: Reed T0H switch, lead wire 1m
H	Switch quantity	: 2
I	Option	: Bellows for max. ambient temperature 100°C
J	Accessory	: Rod eye

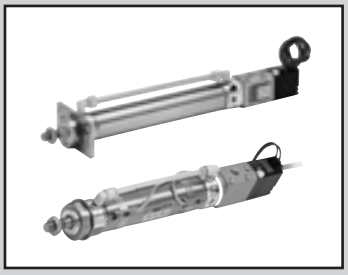

Small cylinder with valve double acting/single rod

CKV2 Series

● Bore size: ø20/ø25/ø32/ø40

JIS symbol ● Double acting cylinder with valve

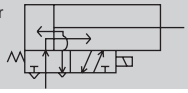

RoHS CAD

Specifications

Item	CKV2 (Standard/with switch)			
Bore size mm	ø20	ø25	ø32	ø40
Actuation	Double acting/with valve			
Working fluid	Compressed air			
Max. working pressure MPa	1 (≈150 psi, 10 bar)			
Min. working pressure MPa	0.15 (≈22 psi, 1.5 bar)			
Proof pressure MPa	1.6 (≈230 psi, 16 bar)			
Ambient temperature °C	-5 (23°F) to 60 (140°F) (no freezing)			
Port size	Rc1/8			
Stroke tolerance mm	$^{+2.0}_{0}$ (to 200) $^{+2.4}_{0}$ (201 to 750)			
Working piston speed mm/s	50 to 500		50 to 430	50 to 300
Cushion	Rubber cushion			
Lubrication	Not required (use turbine oil class 1 ISO VG32 if necessary for lubrication)			
Allowable absorbed energy J	0.166	0.308	0.424	0.639
Solenoid valve specifications				
Rated voltage (note) V	100 AC(50/60 Hz)	200 AC(50/60 Hz)	24 DC	
Starting current A	0.056/0.048	0.028/0.024	0.110	
Holding current A	0.028/0.024	0.014/0.012		
Power consumption W	2.0	2.0	2.5	
Voltage fluctuation range	±10%			
Thermal class	Class B or equivalent			

● Note: 100 VAC and 200 VAC are available with 110 VAC and 220 VAC (60 Hz).

Stroke

Bore size (mm)	Standard stroke (mm)	Max. stroke (mm)	Min. stroke (mm)
ø20	25/50/75/100/150/200	750	5
ø25			
ø32			
ø40			

*1: The custom stroke is available in 1 mm increments.
*2: The stroke will be 25 mm and over with bellows "J". Contact CKD when stroke is shorter than 25 mm.

Min. stroke with switch

(Unit: mm)

Switch quantity	1					2					3				
	Proximity			Reed		Proximity			Reed		Proximity			Reed	
Bore size (mm)	T2, T3	T2W, T3W	T1, T*Y*	T0, T5	T8	T2, T3	T2W, T3W	T1, T*Y*	T0, T5	T8	T2, T3	T2W, T3W	T1, T*Y*	T0, T5	T8
ø20	10					25	30	35	25	35	50	55	55	50	55
ø25	10					25	30	35	25	35	50	55	55	50	55
ø32	10					25	30	35	25	35	50	55	55	50	55
ø40	10					25	30	35	25	35	50	55	55	50	55

*1: Up to 3 switches can be mounted.

Switch specifications

● 1-color/2-color LED

Item	2-wire proximity	2-wire proximity			3-wire proximity				2-wire reed						
	T1H/T1V	T2H/T2V/ T2JH/T2JV	T2YH/ T2YV	T2WH/ T2WV	T3H/ T3V	T3PH/ T3PV	T3YH/ T3YV	T3WH/ T3WV	T0H/T0V		T5H/T5V		T8H/T8V		
Applications	For programmable controller, relay, compact solenoid valve	Dedicated for programmable controller			For programmable controller, relay				For programmable controller, relay		For programmable controller, relay, IC circuit (no indicator lamp), serial connection		For programmable controller, relay		
Output method	-				NPN output	PNP output	NPN output	NPN output	-						
Pwr. supp. V.	-				10 to 28 VDC				-						
Load voltage	85 to 265 VAC	10 to 30 VDC		24 VDC ±10%	30 VDC or less				12/24 VDC	100/110 VAC	5/12/24 VDC	100/110 VAC	12/24 VDC	110 VAC	220 VAC
Load current	5 to 100 mA	5 to 20 mA (*3)			100 mA or less		50 mA or less		5 to 50 mA	7 to 20 mA	50 mA or less	20 mA or less	5 to 50 mA	7 to 20 mA	7 to 10 mA
Indicator	LED (Lit when ON)	LED (Lit when ON)	Red/green LED (Lit when ON)	Red/green LED (Lit when ON)	LED (Lit when ON)	Yellow LED (Lit when ON)	Red/green LED (Lit when ON)	Red/green LED (Lit when ON)	LED (Lit when ON)		No indicator lamp		LED (Lit when ON)		
Leakage current	≤ 1 mA at 100 VAC, ≤ 2 mA at 200 VAC	1mA or less			10 μA or less				0 mA						
Weight g	1 m:33 3 m:87 5 m:142	1 m:18 3 m:49 5 m:80	1 m:33 3 m:87 5 m:142	1 m:18 3 m:49 5 m:80	1 m:18 3 m:49 5 m:80		1 m:33 3 m:87 5 m:142	1 m:18 3 m:49 5 m:80	1 m:18 3 m:49 5 m:80				1 m:33 3 m:87 5 m:142		

*1 : Refer to Ending Page 1 for detailed switch specifications and dimensions.
*2 : Switches other than the above models, such as switches with connectors, are also available. Refer to Ending Page 1.
*3 : The max. load current is 20 mA at 25°C. The current is lower than 20 mA if the operating ambient temperature around the switch is higher than 25˚C. (5 to 10 mA at 60°C)

Cylinder weight

(Unit: kg)

Item/mounting / Bore size (mm)	Product weight when stroke (S) = 0 mm: Basic (00)	Axial foot (LB)	Rod side flange (FA)	Rod side trunnion (TA)	Head side trunnion (TB)	Switch weight	Switch rail + band weight	Additional weight per S = 10 mm
ø20	0.47	0.63	0.53	0.52	0.49	Refer to the weight in the switch specifications.	0.005	0.01
ø25	0.57	0.79	0.72	0.67	0.60		0.005	0.01
ø32	0.62	0.84	0.77	0.72	0.65		0.009	0.02
ø40	0.81	1.08	0.96	0.97	0.85		0.009	0.02

(Example) Product weight of CKV2-FA-32-50-1-T0H-D

Product weight when S = 0 mm …… 0.77 kg
Additional weight when S = 50 mm … Additional weight when S = 10 mm 0.02 x $\frac{\text{Product stroke (50)}}{10}$ = 0.10 kg
Weight of 2 switches …… 0.036 kg
Weight of switch rail + 2 bands …… 0.018 kg
Product weight …… 0.77 kg + 0.1 kg + 0.036 kg + 0.018 kg = 0.924 kg

Theoretical thrust table

(Unit: N)

Bore size (mm)	Operating direction	Working pressure MPa: 0.15	0.2	0.3	0.4	0.5	0.6	0.7	0.8	0.9	1.0
ø20	Push	47.1	62.8	94.2	1.26×10^2	1.57×10^2	1.88×10^2	2.20×10^2	2.51×10^2	2.83×10^2	3.14×10^2
	Pull	35.3	47.1	70.7	94.2	1.18×10^2	1.41×10^2	1.65×10^2	1.88×10^2	2.12×10^2	2.36×10^2
ø25	Push	73.6	98.2	1.47×10^2	1.96×10^2	2.45×10^2	2.95×10^2	3.44×10^2	3.93×10^2	4.42×10^2	4.91×10^2
	Pull	56.7	75.6	1.13×10^2	1.51×10^2	1.89×10^2	2.27×10^2	2.64×10^2	3.02×10^2	3.40×10^2	3.78×10^2
ø32	Push	1.21×10^2	1.61×10^2	2.41×10^2	3.22×10^2	4.02×10^2	4.83×10^2	5.63×10^2	6.43×10^2	7.24×10^2	8.04×10^2
	Pull	1.04×10^2	1.38×10^2	2.07×10^2	2.76×10^2	3.46×10^2	4.15×10^2	4.84×10^2	5.53×10^2	6.22×10^2	6.91×10^2
ø40	Push	1.88×10^2	2.51×10^2	3.77×10^2	5.03×10^2	6.28×10^2	7.54×10^2	8.80×10^2	1.01×10^3	1.13×10^3	1.26×10^3
	Pull	1.65×10^2	2.21×10^2	3.31×10^2	4.41×10^2	5.51×10^2	6.62×10^2	7.72×10^2	8.82×10^2	9.92×10^2	1.10×10^3

How to order

No switch (built-in magnet for switch)

CKV2 - LB - 20 ◯ - 25 - U - 1 ———— J I

With switch (built-in magnet for switch)

CKV2 - LB - 20 ◯ - 25 - U - 1 - T0H - R - J I

- CKV2: Selection guide
- LB: Ⓐ Mounting
- 20: Ⓑ Bore size
- ◯: Ⓒ Port thread
- 25: Ⓓ Stroke
- U: Ⓔ How to wire
- 1: Ⓕ Voltage
- T0H: Ⓖ Switch model No.
- R: Ⓗ Switch quantity *1
- J: Ⓘ Option *2/*3/*4/*5/*6
- I: Ⓙ Accessory *7

Code	Description
Ⓐ Mounting	
00	Basic
LB	Axial foot
FA	Rod side flange
TA	Rod side trunnion
TB	Head side trunnion

Ⓑ Bore size (mm)	
20	ø20
25	ø25
32	ø32
40	ø40

Ⓒ Port thread	
Blank	Rc thread
NN	NPT thread (made-to-order product)
GN	G thread (made-to-order product)

Ⓓ Stroke (mm)

Bore size	Stroke *1	Custom stroke
ø20	5 to 750	In 1 mm increments
ø25	5 to 750	
ø32	5 to 750	
ø40	5 to 750	

Ⓔ How to wire	
Blank	Grommet lead wire (300 mm)
U	DIN terminal

Ⓕ Voltage	
1	100 VAC
2	200 VAC
3	24 VDC

Ⓖ Switch model No.

Axial lead wire	Radial lead wire	Contact	Voltage AC	Voltage DC	Indicator	Lead wire
T0H*	T0V*	Reed	●	●	1-color LED	2-wire
T5H*	T5V*	Reed	●	●	No indicator lamp	2-wire
T8H*	T8V*	Reed	●	●	1-color LED	2-wire
T1H*	T1V*	Proximity	●		1-color LED	2-wire
T2H*	T2V*	Proximity		●	1-color LED	2-wire
T3H*	T3V*	Proximity		●	1-color LED	3-wire
T3PH*	T3PV*	Proximity		●	1-color LED	3-wire
T2WH*	T2WV*	Proximity		●	2-color LED	2-wire
T2YH*	T2YV*	Proximity		●	2-color LED	2-wire
T3WH*	T3WV*	Proximity		●	2-color LED	3-wire
T3YH*	T3YV*	Proximity		●	2-color LED	3-wire
T2JH*	T2JV*	Proximity		●	1-color LED off-delay	2-wire

*** Lead wire length**	
Blank	1 m (standard)
3	3 m (option)
5	5 m (option)

Ⓗ Switch quantity	
R	1 on rod side
H	1 on head side
D	2
T	3

Ⓘ Option

		Max. ambient temp.	Instantaneous max. temp
J	Bellows	100°C	200°C
L	Bellows	250°C	400°C
M	Piston rod material (stainless steel)		
W	With silencer		
G	With surge suppressor		
E	With indicator lamp		
X	Pull when energized		
P6	Copper and PTFE free specification (made-to-order product)		

Ⓙ Accessory	
I	Rod eye
Y	Rod clevis (pin, washer, split pin included)
B2	Clevis bracket
B3	Clevis bracket (clevis)

⚠ Precautions for model No. selection

*1 : Refer to page 680 for the min. stroke with switch.
*2 : The stroke will be 25 mm and over with bellows "J". Contact CKD when stroke is shorter than 25 mm.
*3 : The surge suppressor (G) is included when the wiring method is grommet lead wire.
*4 : The type with lamp (E) is available only for the DIN terminal (U) wiring method.
*5 : The instantaneous max. temperature is the temperature when sparks, cutting chips, etc., instantaneously contact the bellows.
*6 : For copper and PTFE free (P6), check the delivery date as it is a made-to-order product.
*7 : "I" and "Y" cannot be selected together.
*8 : Refer to Ending Page 85 for custom specifications of rod end form.
*9 : Refer to page 678 for combination of variations/options.
*10: Up to 3 switches can be mounted. If four or more switches are required, switch mounting brackets for the extra switches must be prepared separately.

[Example of model No.]

CKV2-LB-20-25-U-1-T0H-R-JI

Model: Small cylinder with valve double acting/single rod

Ⓐ Mounting	: Axial foot
Ⓑ Bore size	: ø20 mm
Ⓒ Port thread	: Rc thread
Ⓓ Stroke	: 25 mm
Ⓔ How to wire	: DIN terminal
Ⓕ Voltage	: 100 VAC
Ⓖ Switch model No.	: Reed T0H switch, lead wire 1m
Ⓗ Switch quantity	: 1 on rod side
Ⓘ Option	: Bellows for max. ambient temperature 100°C
Ⓙ Accessory	: Rod eye

How to order switch

● Switch body + mounting bracket set

CKV2 - T0H - 20

- T0H: Switch model No. (Item Ⓖ on page 682)
- 20: Bore size (Item Ⓑ on page 682)

● Switch body only

SW - T0H

- T0H: Switch model No. (Item Ⓖ on page 682)

● Mounting bracket set

CKV2 - T - 20

- T: Mounting bracket
- 20: Bore size (Item Ⓑ on page 682)

How to order mounting bracket

Bore size (mm) / Mounting bracket	ø20	ø25	ø32	ø40
Axial foot (LB) rod side	M1-LB-20	M1-LB-30	M1-LB-30	M1-LB-30
Axial foot (LB) head side	M1-LBV-20	M1-LBV-30	M1-LBV-30	M1-LBV-40
Flange (FA)	M1-FA-20	M1-FA-30	M1-FA-30	M1-FA-30
Trunnion (TA)	M1-TA-20	M1-TA-30	M1-TA-30	M1-TA-40
Bolt for head side trunnion (TB)	M1-TB-20	M1-TB-30	M1-TB-30	M1-TB-40

*1 : With regard to mounting brackets, the axial foot rod side and the flange include mounting nuts and toothed washers, the trunnion includes mounting nuts, and the axial foot head side includes mounting bolts.
*2 : For material of the mounting bracket, refer to page 684.
3 : For axial foot, 1 set each of the above “M1-LB-” and “M1-LBV-*” is required.

SCP*3
CMK2
CMA2
SCM
SCG
SCA2
SCS2
CKV2
CAV2/COVP/N2
SSD2
SSG
SSD
CAT
MDC2
MVC
SMG
MSD/MSDG
FC*
STK
SRL3
SRG3
SRM3
SRT3
MRL2
MRG2
SM-25
ShkAbs
FJ
FK
Spd Contr
Ending

Internal structure and parts list

● CKV2 (with switch)

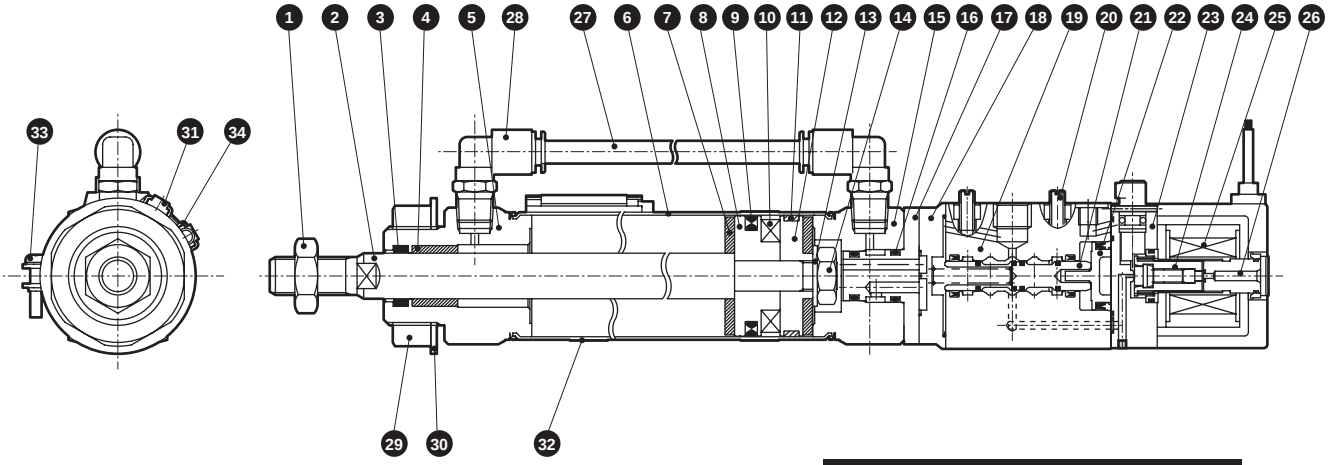

Cannot be disassembled

No.	Part name	Material	Remarks
1	Rod nut	Steel	Zinc chromate
2	Piston rod	ø20, ø25: Stainless steel ø32, ø40: Carbon steel	Industrial chrome plating
3	Rod packing	Nitrile rubber	
4	Bush	ø20: Dry bearing	*1
		ø25, ø32, ø40: Copper-based	*1
5	Rod cover	Aluminum alloy	
6	Cylinder tube	Stainless steel	
7	Cushion rubber	Urethane rubber	
8	Piston A	Aluminum alloy	
9	Piston packing	Nitrile rubber	
10	Magnet	Plastic	
11	Wear ring	Polyacetal	
12	Piston B	Aluminum alloy	
13	Spacer	Steel	Zinc chromate
14	Hexagon nut	Steel	Zinc chromate
15	Head cover	Aluminum alloy	
16	O-ring	Nitrile rubber	

*1: Oil-impregnated cast iron bearing for copper and PTFE free.

No.	Part name	Material	Remarks
17	Adaptor	Steel	Zinc chromate
18	Cap	Aluminum alloy die-casting	Chromate
19	Valve body	Aluminum alloy	Alumite
20	Speed adjustment needle	Copper alloy	
21	Spool assembly	——	
22	Piston assembly	——	
23	Pilot valve body	Nylon	
24	Plunger assembly	——	
25	Coil assembly	——	
26	Core assembly	——	
27	Pass-pipe	Nylon	
28	Fitting	——	GWJL6-6
29	Nut	Steel	Zinc chromate
30	Toothed washer	Steel	Zinc chromate
With switch			
31	Switch body	——	
32	Band	Stainless steel	
33	Pan head machine screw	Stainless steel	
34	Switch rail	Stainless steel	

Material of mounting bracket

Mounting	Material	Remarks
LB	Steel	Zinc chromate
FA	Steel	Zinc chromate
TA	Steel	Zinc chromate

Note: Mounting bracket will be shipped with the product.
However, LB, FA, and TA with bellows will be shipped assembled.

Repair parts list of valve section

Kit No.	Repair parts No.
CKV2-VK	16 21 22

Dimensions

● Basic (00)

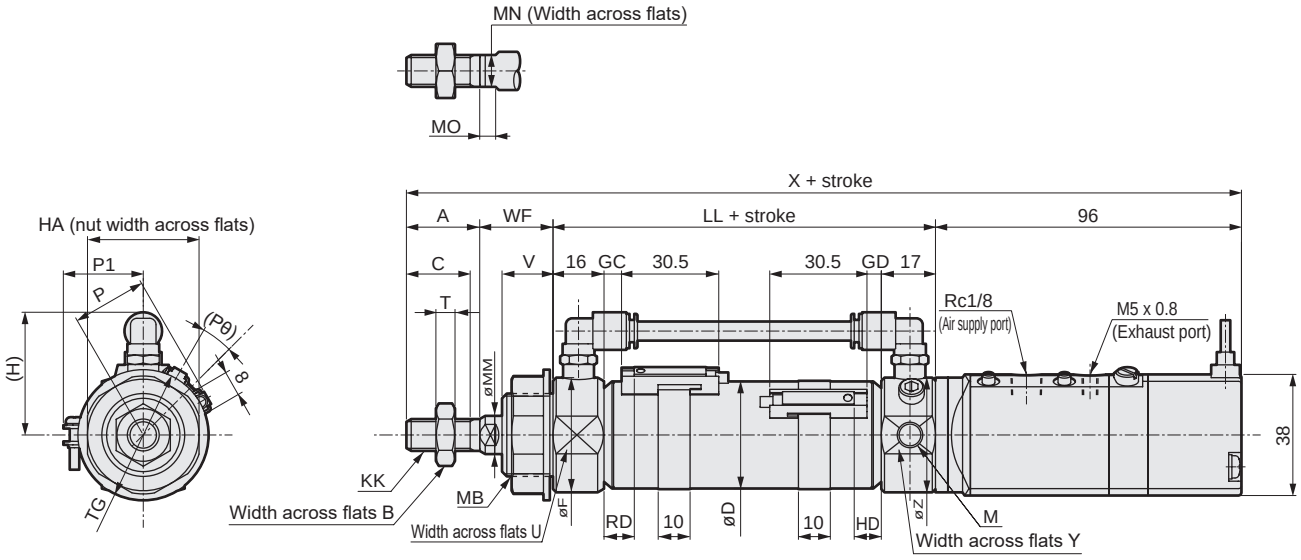

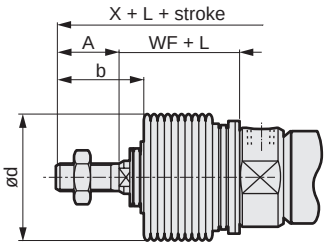

[With bellows]

1 : Refer to page 698 for HD, RD and protruding dimensions of T1, T8* and 2-color LED switches.
*2 : For the L dimension, round up below the decimal point.
*3 : For the dimensions of the accessories, refer to page 699.

Code	Basic (00) Basic dimensions																	
Bore size (mm)	A	B	C	D	F	(H)	HA	KK	LL	M	MB	MM	MN	MO	T	TG	U	V
ø20	20	13	18	21.4	28	38.5	26	M8x1.0	67	M8	M18x1.5	10	8	5	5	29	24	14
ø25	23	17	20	26.4	32	38.5	35	M10x1.25	70	M8	M26x1.5	12	10	5	6	41	30	16
ø32	23	17	20	33.6	36	38.5	35	M10x1.25	70	M8	M26x1.5	12	10	5	6	41	34	16
ø40	25	19	22	41.6	45	43.0	35	M12x1.5	74	M10	M26x1.5	14	12	6	7	41	43	16

Code					With switch											With bellows		
					T0, T5, T2, T3				T2W, T3W									
Bore size (mm)	WF	X	Y	Z	GC	GD	RD	HD	GC	GD	RD	HD	P	P1	(Pθ)°	b	d	L
ø20	24	207	34	36	4	3	8	7	6	5	10	9	17.3	19.5	22	30	30	(Stroke/3) + 6
ø25	23	212	34	36	5.5	4.5	9.5	8.5	7.5	6.5	11.5	10.5	19.8	22.0	18	32	46	(Stroke/3.25) + 7
ø32	23	212	34	36	5.5	4.5	9.5	8.5	7.5	6.5	11.5	10.5	24.3	25.5	15	32	46	(Stroke/3.25) + 7
ø40	23	218	43	45	7.5	6.5	11.5	10.5	9.5	8.5	13.5	12.5	28.3	29.5	12	34	46	(Stroke/3.25) + 7

SCP*3
CMK2
CMA2
SCM
SCG
SCA2
SCS2
CKV2
CAV2/ COVP/N2
SSD2
SSG
SSD
CAT
MDC2
MVC
SMG
MSD/ MSDG
FC*
STK
SRL3
SRG3
SRM3
SRT3
MRL2
MRG2
SM-25
ShkAbs
FJ
FK
Spd Contr
Ending

Dimensions

● Axial foot (LB)

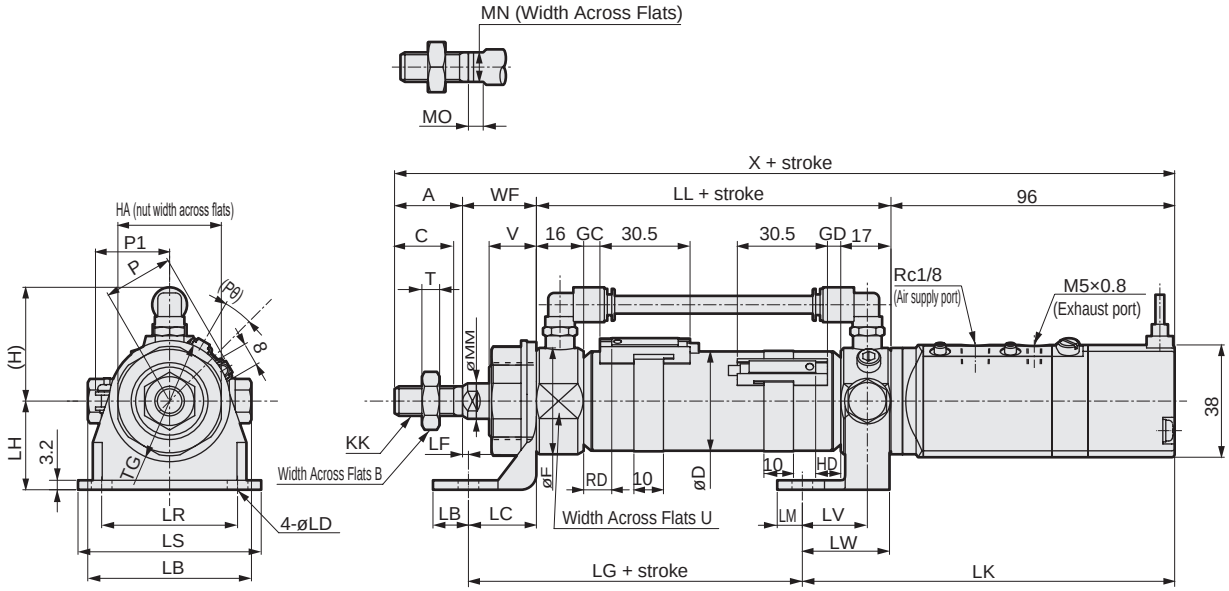

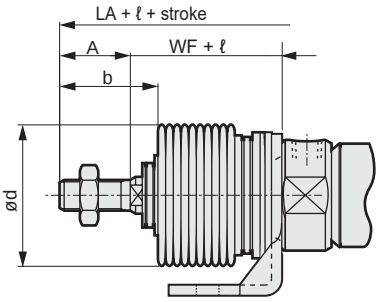

[With bellows]

1: Refer to page 698 for HD, RD and protruding dimensions of T1, T8* and 2-color LED switches.
*2: For the dimensions of the accessories, refer to page 699.

Code	Axial foot (LB) Basic dimensions																		Mounting dimensions	
Bore size (mm)	A	B	C	D	F	(H)	HA	KK	LL	MM	MN	MO	T	TG	U	V	WF	X	LB	LC
ø20	20	13	18	21.4	28	38.5	26	M 8 x 1.0	67	10	8	5	5	29	24	14	24	207	10	18
ø25	23	17	20	26.4	32	38.5	35	M 10 x 1.25	70	12	10	5	6	41	30	16	23	212	12	23
ø32	23	17	20	33.6	36	38.5	35	M 10 x 1.25	70	12	10	5	6	41	34	16	23	212	12	23
ø40	25	19	22	41.6	45	43	35	M 12 x 1.5	74	14	12	6	7	41	43	16	23	218	12	23

Code	Mounting dimensions											With switch								
												T0,T5,T2,T3				T2W,T3W				P
Bore size (mm)	LD	LF	LG	LH	LK	LM	LR	LS	LT	LV	LW	GC	GD	RD	HD	GC	GD	RD	HD	
ø20	6	6	55	25	126	7.5	30	44	55.4	22	29.5	4	3	8	7	6	5	10	9	17.3
ø25	7	0	63	30	126	8.5	46	62	55.4	22	29.5	5.5	4.5	9.5	8.5	7.5	6.5	11.5	10.5	19.8
ø32	7	0	63	30	126	8.5	46	62	55.4	22	29.5	5.5	4.5	9.5	8.5	7.5	6.5	11.5	10.5	24.3
ø40	7	0	64	30	129	8	46	62	68.4	25	35	7.5	6.5	11.5	10.5	9.5	8.5	13.5	12.5	28.3

Code			With bellows		
Bore size (mm)	P1	(Pθ)°	b	d	ℓ
ø20	19.5	22	30	30	(Stroke/3) + 6
ø25	22.0	18	32	46	(stroke/3.25) + 7
ø32	25.5	15	32	46	(stroke/3.25) + 7
ø40	29.5	12	34	46	(stroke/3.25) + 7

Dimensions

● Rod side flange (FA)

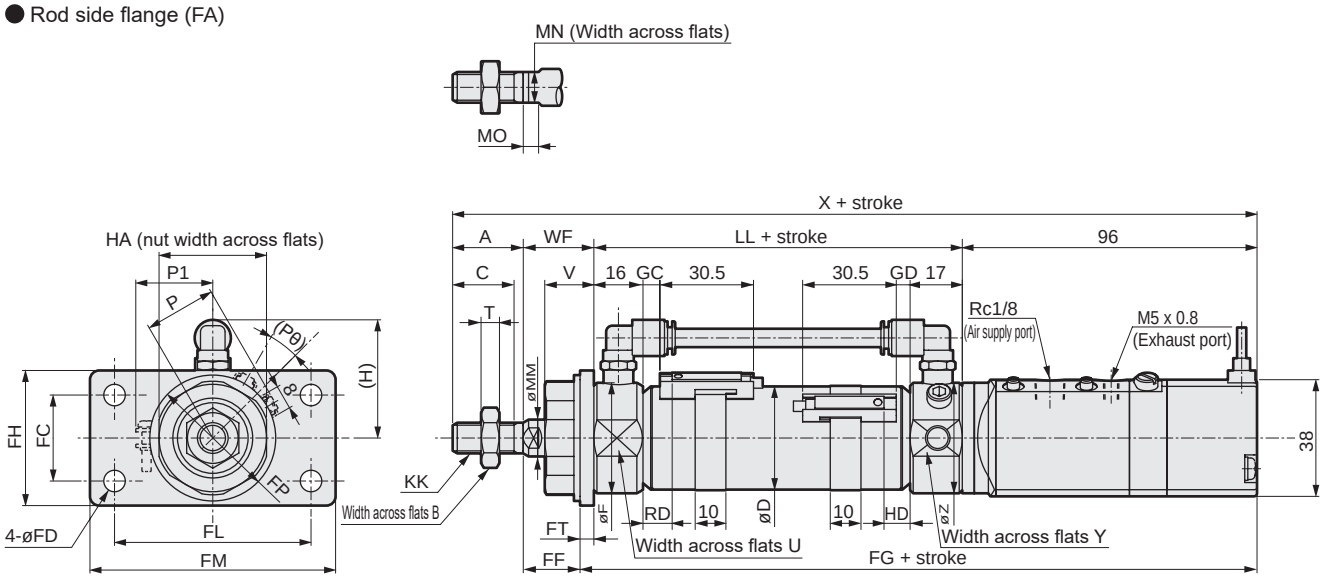

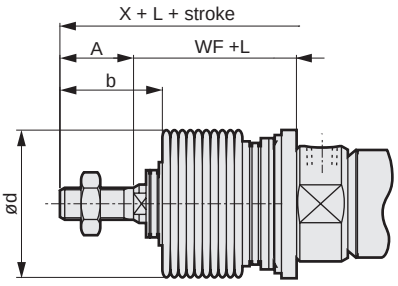

[With bellows]

1: Refer to page 698 for HD, RD and protruding dimensions of T1, T8* and 2-color LED switches.
*2: For the dimensions of the accessories, refer to page 699.

Code	Rod side flange (FA) Basic dimensions																		
Bore size (mm)	A	B	C	D	F	(H)	HA	KK	LL	MM	MN	MO	T	U	V	WF	X	Y	Z
ø20	20	13	18	21.4	28	38.5	26	M8x1.0	67	10	8	5	5	24	14	24	207	34	36
ø25	23	17	20	26.4	32	38.5	35	M10x1.25	70	12	10	5	6	30	16	23	212	34	36
ø32	23	17	20	33.6	36	38.5	35	M10x1.25	70	12	10	5	6	34	16	23	212	34	36
ø40	25	19	22	41.6	45	43	35	M12x1.5	74	14	12	6	7	43	16	23	218	43	45

Code	Mounting dimensions									With switch								
										T0, T5, T2, T3				T2W, T3W				P
Bore size (mm)	FC	FD	FF	FG	FH	FL	FM	FT	FP	GC	GD	RD	HD	GC	GD	RD	HD	
ø20	20	6	20.8	166.2	34	40	54	3.2	29	4	3	8	7	6	5	10	9	17.3
ø25	28	7	18.5	170.5	44	64	80	4.5	41	5.5	4.5	9.5	8.5	7.5	6.5	11.5	10.5	19.8
ø32	28	7	18.5	170.5	44	64	80	4.5	41	5.5	4.5	9.5	8.5	7.5	6.5	11.5	10.5	24.3
ø40	28	7	18.5	174.5	44	64	80	4.5	41	7.5	6.5	11.5	10.5	9.5	8.5	13.5	12.5	28.3

Code			With bellows		
Bore size (mm)	P1	(Pθ)°	b	d	L
ø20	19.5	22	30	30	(Stroke/3) + 6
ø25	22.0	18	32	46	(Stroke/3.25) + 7
ø32	25.5	15	32	46	(Stroke/3.25) + 7
ø40	29.5	12	34	46	(Stroke/3.25) + 7

SCP*3
CMK2
CMA2
SCM
SCG
SCA2
SCS2
CKV2
CAV2/ COVP/N2
SSD2
SSG
SSD
CAT
MDC2
MVC
SMG
MSD/ MSDG
FC*
STK
SRL3
SRG3
SRM3
SRT3
MRL2
MRG2
SM-25
ShkAbs
FJ
FK
Spd Contr
Ending

Dimensions

● Rod side trunnion (TA)

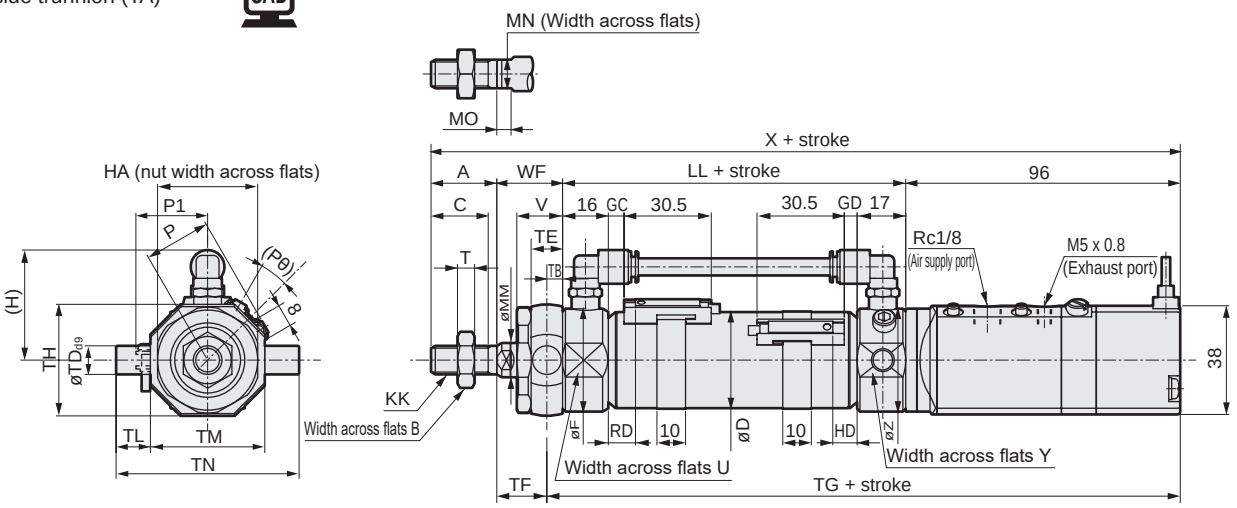

[With bellows]

● Rod side trunnion (TA) bracket (option code B2)

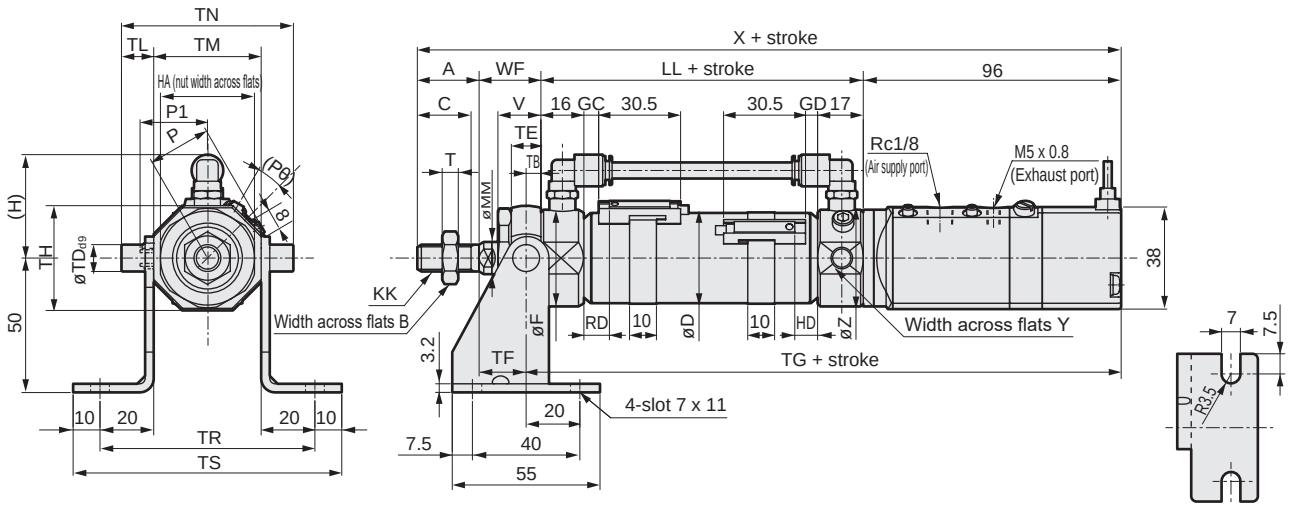

1: Refer to page 698 for HD, RD and protruding dimensions of T1, T8* and 2-color LED switches.
*2: For the dimensions of the accessories, refer to page 699.

Code	Rod side trunnion (TA) Basic dimensions																			Mounting dimensions				
Bore size (mm)	A	B	C	D	F	(H)	HA	KK	LL	MM	MN	MO	T	U	V	WF	X	Y	Z	TB	TD	TE	TF	TG
ø20	20	13	18	21.4	28	38.5	26	M8x1.0	67	10	8	5	5	24	14	24	207	34	36	4.5	8	9	19.5	167.5
ø25	23	17	20	26.4	32	38.5	35	M10x1.25	70	12	10	5	6	30	16	23	212	34	36	5.5	10	11	17.5	171.5
ø32	23	17	20	33.6	36	38.5	35	M10x1.25	70	12	10	5	6	34	16	23	212	34	36	5.5	10	11	17.5	171.5
ø40	25	19	22	41.6	45	43	35	M12x1.5	74	14	12	6	7	43	16	23	218	43	45	5.5	10	11	17.5	175.5

Code							With switch											With bellows		
							T0, T5, T2, T3				T2W, T3W									
Bore size (mm)	TH	TL	TM	TN	TR	TS	GC	GD	RD	HD	GC	GD	RD	HD	P	P1	(Pθ)°	b	d	L
ø20	29.5	8	30	46	70	90	4	3	8	7	6	5	10	9	17.3	19.5	22	30	30	(Stroke/3) + 6
ø25	39	12	40	64	80	100	5.5	4.5	9.5	8.5	7.5	6.5	11.5	10.5	19.8	22.0	18	32	46	(Stroke/3.25) + 7
ø32	39	12	40	64	80	100	5.5	4.5	9.5	8.5	7.5	6.5	11.5	10.5	24.3	25.5	15	32	46	(Stroke/3.25) + 7
ø40	44	9.5	53	72	93	113	7.5	6.5	11.5	10.5	9.5	8.5	13.5	12.5	28.3	29.5	12	34	46	(Stroke/3.25) + 7

Dimensions

● Head side trunnion (TB)

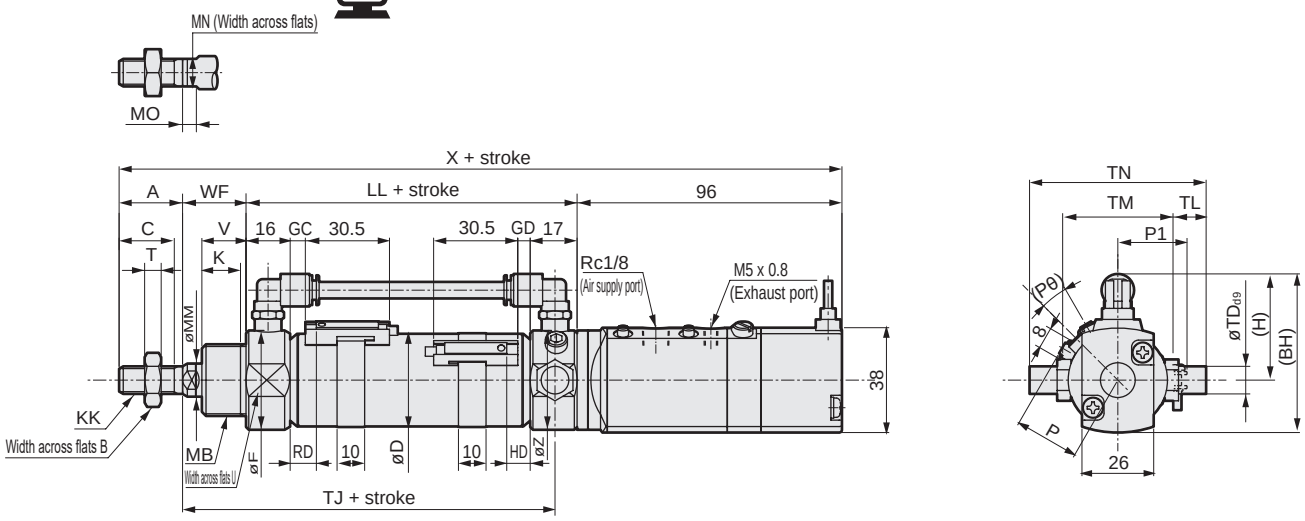

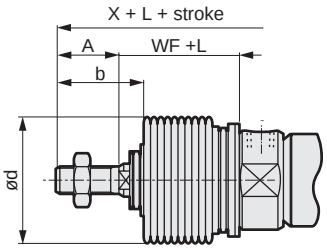

[With bellows]

● Head end trunnion (TB) with bracket (option code B2)

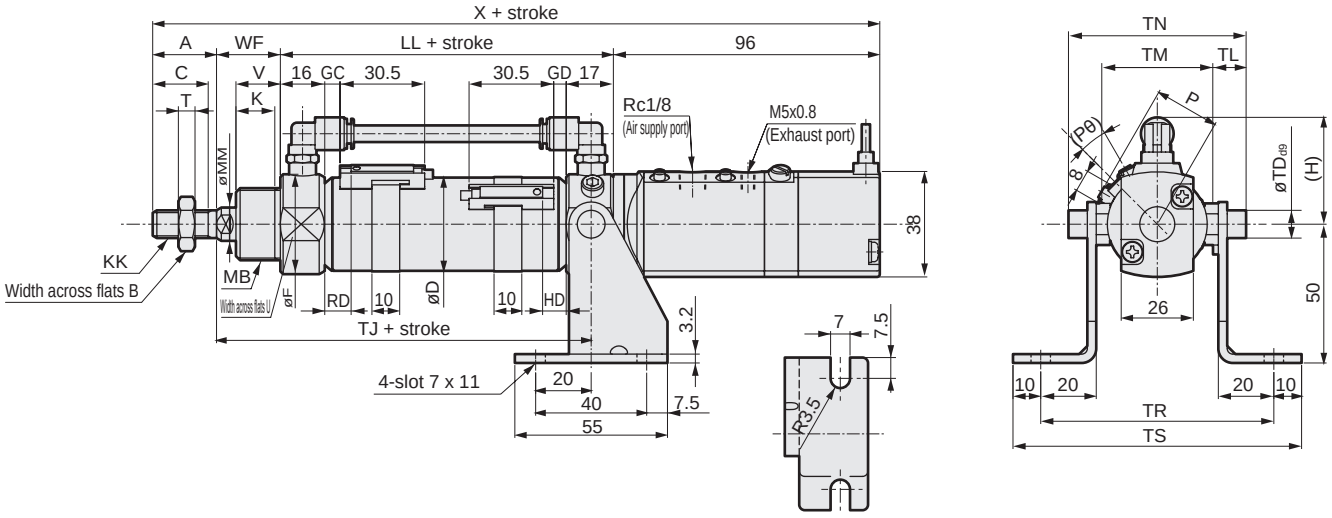

1: Refer to page 698 for HD, RD and protruding dimensions of T1, T8* and 2-color LED switches.
*2: For the dimensions of the accessories, refer to page 699.

Code	Head side trunnion (TB) Basic dimensions																			
Bore size (mm)	A	B	BH	C	D	F	(H)	K	KK	LL	MB	MM	MN	MO	T	U	V	WF	X	Z
ø20	20	13	57.5	18	21.4	28	38.5	12	M8x1.0	67	M18x1.5	10	8	5	5	24	14	24	207	36
ø25	23	17	57.5	20	26.4	32	38.5	14	M10x1.25	70	M26x1.5	12	10	5	6	30	16	23	212	36
ø32	23	17	57.5	20	33.6	36	38.5	14	M10x1.25	70	M26x1.5	12	10	5	6	34	16	23	212	36
ø40	25	19	62	22	41.6	45	43	14	M12x1.5	74	M26x1.5	14	12	6	7	43	16	23	218	45

Code	Mounting dimensions							With switch											With bellows		
								T0, T5, T2, T3				T2W, T3W									
Bore size (mm)	TD	TJ	TL	TM	TN	TR	TS	GC	GD	RD	HD	GC	GD	RD	HD	P	P1	(Pθ)°	b	d	L
ø20	8	83	8	44	60	84	104	4	3	8	7	6	5	10	9	17.3	19.5	22	30	30	(Stroke/3) + 6
ø25	10	85	10	44	64	84	104	5.5	4.5	9.5	8.5	7.5	6.5	11.5	10.5	19.8	22.0	18	32	46	(Stroke/3.25) + 7
ø32	10	85	10	44	64	84	104	5.5	4.5	9.5	8.5	7.5	6.5	11.5	10.5	24.3	25.5	15	32	46	(Stroke/3.25) + 7
ø40	10	89	10	53	73	93	113	7.5	6.5	11.5	10.5	9.5	8.5	13.5	12.5	28.3	29.5	12	34	46	(Stroke/3.25) + 7

SCP*3
CMK2
CMA2
SCM
SCG
SCA2
SCS2
CKV2
CAV2/ COVP/N2
SSD2
SSG
SSD
CAT
MDC2
MVC
SMG
MSD/ MSDG
FC*
STK
SRL3
SRG3
SRM3
SRT3
MRL2
MRG2
SM-25
ShkAbs
FJ
FK
Spd Contr
Ending

Dimensions

● Head side trunnion (TB) with bracket (option code B3)

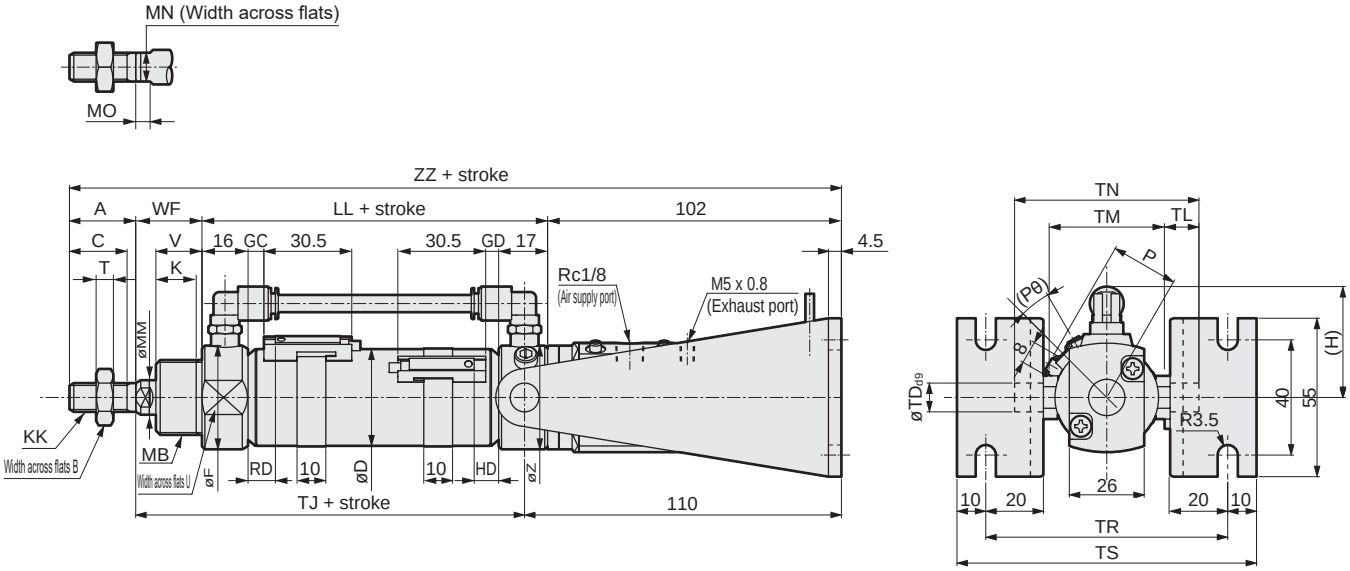

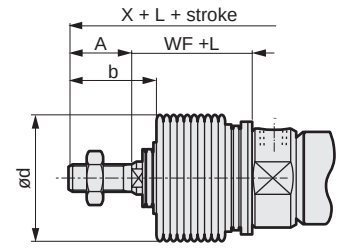

[With bellows]

1: Refer to page 698 for HD, RD and protruding dimensions of T1, T8* and 2-color LED switches.
*2: For the dimensions of the accessories, refer to page 699.

Code	Head side trunnion (TB) with bracket (option code B3) Basic dimensions																	
Bore size (mm)	A	B	C	D	F	(H)	K	KK	LL	MB	MM	MN	MO	T	U	V	WF	ZZ
ø20	20	13	18	21.4	28	38.5	12	M8x1.0	67	M18x1.5	10	8	5	5	24	14	24	213
ø25	23	17	20	26.4	32	38.5	14	M10x1.25	70	M26x1.5	12	10	5	6	30	16	23	218
ø32	23	17	20	33.6	36	38.5	14	M10x1.25	70	M26x1.5	12	10	5	6	34	16	23	218
ø40	25	19	22	41.6	45	43	14	M12x1.5	74	M26x1.5	14	12	6	7	43	16	23	224

Code	Mounting dimensions							With switch										With bellows	
								T0, T5, T2, T3				T2W, T3W							
Bore size (mm)	TD	TJ	TL	TM	TN	TR	TS	GC	GD	RD	HD	GC	GD	RD	HD	P	(Pθ)°	b	d
ø20	8	83	8	44	60	84	104	4	3	8	7	6	5	10	9	17.3	22	30	30
ø25	10	85	10	44	64	84	104	5.5	4.5	9.5	8.5	7.5	6.5	11.5	10.5	19.8	18	32	46
ø32	10	85	10	44	64	84	104	5.5	4.5	9.5	8.5	7.5	6.5	11.5	10.5	24.3	15	32	46
ø40	10	89	10	53	73	93	113	7.5	6.5	11.5	10.5	9.5	8.5	13.5	12.5	28.3	12	34	46

Code	
Bore size (mm)	L
ø20	(Stroke/3) + 6
ø25	(Stroke/3.25) + 7
ø32	(Stroke/3.25) + 7
ø40	(Stroke/3.25) + 7

MEMO

Small cylinder with valve double acting/rotation-stop

CKV2-M Series

● Bore size: ø20/ø25/ø32/ø40

JIS symbol ● Double acting cylinder rotation-stop with valve

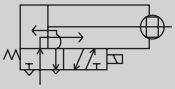

RoHS

Specifications

Item	CKV2-M			
Bore size mm	ø20	ø25	ø32	ø40
Actuation	Double acting/rotation-stop			
Working fluid	Compressed air			
Max. working pressure MPa	1 (≈150 psi, 10 bar)			
Min. working pressure MPa	0.15 (≈22 psi, 1.5 bar)			
Proof pressure MPa	1.6 (≈230 psi, 16 bar)			
Ambient temperature °C	-5 (23°F) to 60 (140°F) (no freezing)			
Port size	Rc1/8			
Stroke tolerance mm	$^{+2.0}_{0}$(to 200)$^{+2.4}_{0}$(201 to 750)			
Working piston speed mm/s	50 to 500		50 to 430	50 to 300
Cushion	Rubber cushion			
Lubrication	Not required (use turbine oil class 1 ISO VG32 if necessary for lubrication)			
Non-rotating accuracy Note °	±1.5			±1
Allowable absorbed energy J	0.166	0.308	0.424	0.639

Note: Values of when the stroke is 0 mm (except for flexure of the piston rod)

Solenoid valve specifications			
Rated voltage V	100 AC(50/60 Hz)	200 AC(50/60 Hz)	24 DC
Starting current A	0.056/0.048	0.028/0.024	0.110
Holding current A	0.028/0.024	0.014/0.012	
Power consumption W	2.0	2.0	2.5
Voltage fluctuation range	±10%		
Thermal class	Class B or equivalent		

● Note: 100 VAC and 200 VAC are available with 110 VAC and 220 VAC (60 Hz).

Stroke

Bore size (mm)	Standard stroke (mm)	Max. stroke (mm)	Min. stroke (mm)
ø20	25/50/75 100/150/200	750	5
ø25			
ø32			
ø40			

*1: The custom stroke is available in 1 mm increments.
*2: The stroke will be 25 mm and over with bellows "J". Contact CKD when stroke is shorter than 25 mm.

Min. stroke with switch

(Unit: mm)

Switch quantity	1					2					3				
	Proximity			Reed		Proximity			Reed		Proximity			Reed	
Bore size (mm)	T2, T3	T2W, T3W	T1, T*Y*	T0, T5	T8	T2, T3	T2W, T3W	T1, T*Y*	T0, T5	T8	T2, T3	T2W, T3W	T1, T*Y*	T0, T5	T8
ø20	10					25	30	35	25	35	50	55	55	50	55
ø25	10					25	30	35	25	35	50	55	55	50	55
ø32	10					25	30	35	25	35	50	55	55	50	55
ø40	10					25	30	35	25	35	50	55	55	50	55

*1: Up to 3 switches can be mounted.

Switch specifications

● 1 color/2-color LED/strong magnetic field proof

Item	2-wire proximity	2-wire proximity			3-wire proximity				2-wire reed						
	T1H/T1V	T2H/T2V/ T2JH/T2JV	T2YH/ T2YV	T2WH/ T2WV	T3H/ T3V	T3PH/ T3PV	T3YH/ T3YV	T3WH/ T3WV	T0H/T0V		T5H/T5V		T8H/T8V		
Applications	For programmable controller, relay, compact solenoid valve	Dedicated for programmable controller			For programmable controller, relay				For programmable controller, relay		For programmable controller, relay, IC circuit (no indicator lamp), serial connection		For programmable controller, relay		
Output method	-				NPN output	PNP output	NPN output	NPN output	-						
Pwr. supp. V.	-				10 to 28 VDC				-						
Load voltage	85 to 265 VAC	10 to 30 VDC		24 VDC ±10%	30 VDC or less				12/24 VDC	100/110 VAC	5/12/24 VDC	100/110 VAC	12/24 VDC	110 VAC	220 VAC
Load current	5 to 100 mA	5 to 20 mA (*3)			100 mA or less		50 mA or less		5 to 50 mA	7 to 20 mA	50 mA or less	20 mA or less	5 to 50 mA	7 to 20 mA	7 to 10 mA
Indicator	LED (Lit when ON)	LED (Lit when ON)	Red/green LED (Lit when ON)	Red/green LED (Lit when ON)	LED (Lit when ON)	Yellow LED (Lit when ON)	Red/green LED (Lit when ON)	Red/green LED (Lit when ON)	LED (Lit when ON)		No indicator lamp		LED (Lit when ON)		
Leakage current	≤ 1 mA at 100 VAC, ≤ 2 mA at 200 VAC	1 mA or less			10 μA or less				0 mA						
Weight g	1 m:33 3 m:87 5 m:142	1 m:18 3 m:49 5 m:80	1 m:33 3 m:87 5 m:142	1 m:18 3 m:49 5 m:80	1 m:18 3 m:49 5 m:80		1 m:33 3 m:87 5 m:142	1 m:18 3 m:49 5 m:80	1 m:18 3 m:49 5 m:80				1 m:33 3 m:87 5 m:142		

*1 : Refer to Ending Page 1 for detailed switch specifications and dimensions.
*2 : Switches other than the above models, such as switches with connectors, are also available. Refer to Ending Page 1.
*3 : The max. load current is 20 mA at 25°C. The current is lower than 20 mA if the operating ambient temperature around the switch is higher than 25˚C. (5 to 10 mA at 60°C)

Cylinder weight

(Unit: kg)

Item/mounting / Bore size (mm)	Product weight when stroke (S) = 0 mm					Switch weight	Switch rail + band weight	Additional weight per S = 10 mm
	Basic (00)	Axial foot (LB)	Rod side flange (FA)	Rod side trunnion (TA)	Head side trunnion (TB)			
ø20	0.47	0.63	0.53	0.52	0.49	Refer to the weight in the switch specifications.	0.005	0.01
ø25	0.57	0.79	0.72	0.67	0.60		0.005	0.01
ø32	0.62	0.84	0.77	0.72	0.65		0.009	0.02
ø40	0.81	1.08	0.96	0.97	0.85		0.009	0.02

(Example) Product weight of CKV2-M-FA-32-50-1-TOH-D

Product weight when S = 0 mm .....0.77 kg
Additional weight when S = 50 mm ...Additional weight when S = 10 mm 0.02 x $\frac{\text{Product stroke (50)}}{10}$ = 0.10 kg
Weight of 2 switches .....0.036 kg
Weight of switch rail + 2 bands .....0.018 kg
Product weight .....0.77 kg + 0.1 kg + 0.036 kg + 0.018 kg = 0.924 kg

Theoretical thrust table

(Unit: N)

Bore size (mm)	Operating direction	Working pressure MPa									
		0.15	0.2	0.3	0.4	0.5	0.6	0.7	0.8	0.9	1.0
ø20	Push	47.1	62.8	94.2	1.26×10^2	1.57×10^2	1.88×10^2	2.20×10^2	2.51×10^2	2.83×10^2	3.14×10^2
	Pull	35.3	47.1	70.7	94.2	1.18×10^2	1.41×10^2	1.65×10^2	1.88×10^2	2.12×10^2	2.36×10^2
ø25	Push	73.6	98.2	1.47×10^2	1.96×10^2	2.45×10^2	2.95×10^2	3.44×10^2	3.93×10^2	4.42×10^2	4.91×10^2
	Pull	56.7	75.6	1.13×10^2	1.51×10^2	1.89×10^2	2.27×10^2	2.64×10^2	3.02×10^2	3.40×10^2	3.78×10^2
ø32	Push	1.21×10^2	1.61×10^2	2.41×10^2	3.22×10^2	4.02×10^2	4.83×10^2	5.63×10^2	6.43×10^2	7.24×10^2	8.04×10^2
	Pull	1.04×10^2	1.38×10^2	2.07×10^2	2.76×10^2	3.46×10^2	4.15×10^2	4.84×10^2	5.53×10^2	6.22×10^2	6.91×10^2
ø40	Push	1.88×10^2	2.51×10^2	3.77×10^2	5.03×10^2	6.28×10^2	7.54×10^2	8.80×10^2	1.01×10^3	1.13×10^3	1.26×10^3
	Pull	1.65×10^2	2.21×10^2	3.31×10^2	4.41×10^2	5.51×10^2	6.62×10^2	7.72×10^2	8.82×10^2	9.92×10^2	1.10×10^3

SCP*3
CMK2
CMA2
SCM
SCG
SCA2
SCS2
CKV2
CAV2/COVP/N2
SSD2
SSG
SSD
CAT
MDC2
MVC
SMG
MSD/MSDG
FC*
STK
SRL3
SRG3
SRM3
SRT3
MRL2
MRG2
SM-25
ShkAbs
FJ
FK
Spd Contr
Ending

How to order

No switch (built-in magnet for switch)

CKV2-M - LB - 20 ◯ - 25 - U - 1 ———— J Y

With switch (built-in magnet for switch)

CKV2-M - LB - 20 ◯ - 25 - U - 1 - T0H - R - J Y

Selection guide

Ⓐ Mounting

Ⓑ Bore size

Ⓒ Port thread

Ⓓ Stroke

Ⓔ How to wire

Ⓕ Voltage

Ⓖ Switch model No.

Ⓗ Switch quantity *10

Ⓘ Option *2/*3/*4/*5/*6

Ⓙ Accessory *7

Code	Description
Ⓐ Mounting	
00	Basic
LB	Axial foot
FA	Rod side flange
TA	Rod side trunnion
TB	Head side trunnion

Ⓑ Bore size (mm)	
20	ø20
25	ø25
32	ø32
40	ø40

Ⓒ Port thread	
Blank	Rc thread
NN	NPT thread (made-to-order product)
GN	G thread (made-to-order product)

Ⓓ Stroke (mm)

Bore size	Stroke *1	Custom stroke
ø20	5 to 750	In 1 mm increments
ø25	5 to 750	
ø32	5 to 750	
ø40	5 to 750	

Ⓔ How to wire	
Blank	Grommet lead wire (300 mm)
U	DIN terminal

Ⓕ Voltage	
1	100 VAC
2	200 VAC
3	24 VDC

Ⓖ Switch model No.

Axial lead wire	Radial lead wire	Contact	Voltage AC	Voltage DC	Indicator	Lead wire
T0H*	T0V*	Reed	●	●	1-color LED	2-wire
T5H*	T5V*	Reed	●	●	No indicator lamp	2-wire
T8H*	T8V*	Reed	●	●	1-color LED	2-wire
T1H*	T1V*	Proximity	●		1-color LED	2-wire
T2H*	T2V*	Proximity		●	1-color LED	2-wire
T3H*	T3V*	Proximity		●	1-color LED	3-wire
T3PH*	T3PV*	Proximity		●	1-color LED	3-wire
T2WH*	T2WV*	Proximity		●	2-color LED	2-wire
T2YH*	T2YV*	Proximity		●	2-color LED	2-wire
T3WH*	T3WV*	Proximity		●	2-color LED	3-wire
T3YH*	T3YV*	Proximity		●	2-color LED	3-wire
T2JH*	T2JV*	Proximity		●	1-color LED off-delay	2-wire

*** Lead wire length**	
Blank	1 m (standard)
3	3 m (option)
5	5 m (option)

Ⓗ Switch quantity	
R	1 on rod side
H	1 on head side
D	2
T	3

Ⓘ Option

		Max. ambient temp.	Instantaneous max. temp
J	Bellows	100°C	200°C
L	Bellows	250°C	400°C
M	Piston rod material (stainless steel)		
W	With silencer		
G	With surge suppressor		
E	With indicator lamp		
X	Pull when energized		

Ⓙ Accessory	
I	Rod eye
Y	Rod clevis (pin, washer, split pin included)
B2	Clevis bracket
B3	Clevis bracket (clevis)

⚠ Precautions for model No. selection

*1 : Refer to page 692 for the min. stroke with switch.
*2 : The stroke will be 25 mm and over with bellows "J". Contact CKD when stroke is shorter than 25 mm.
*3 : Units with a surge suppressor (G) will come with grommet lead wires.
*4 : The type with lamp (E) is available only for the DIN terminal (U) wiring method.
*5 : The instantaneous max. temperature is the temperature when sparks, cutting chips, etc., instantaneously contact the bellows.
*6 : Piston rod material is stainless steel. If option M is selected, the rod nut material will be stainless steel.
*7 : "I" and "Y" cannot be selected together.
*8 : Refer to Ending Page 85 for custom specifications of rod end form.
*9 : Refer to page 678 for combination of variations/options.
*10 : Up to 3 switches can be mounted. If four or more switches are required, switch mounting brackets for the extra switches must be prepared separately.

[Example of model No.]

CKV2-M-LB-20-25-U-1-T0H-R-JY

Model: Small cylinder with valve double acting/rotation-stop

Ⓐ Mounting	: Axial foot
Ⓑ Bore size	: ø20 mm
Ⓒ Port thread	: Rc thread
Ⓓ Stroke	: 25 mm
Ⓔ How to wire	: DIN terminal
Ⓕ Voltage	: 100 VAC
Ⓖ Switch model No.	: Reed T0H switch, lead wire 1m
Ⓗ Switch quantity	: 1 on rod side
Ⓘ Option	: Bellows for max. ambient temperature 100°C
Ⓙ Accessory	: Rod clevis

How to order switch

● Switch body + mounting bracket set

CKV2 - T0H - 20

- 20: Bore size (Item Ⓑ on page 694)
- T0H: Switch model No. (Item Ⓖ on page 694)

● Switch body only

SW - T0H

- T0H: Switch model No. (Item Ⓖ on page 694)

● Mounting bracket set

CKV2 - T - 20

- 20: Bore size (Item Ⓑ on page 694)
- T: Mounting bracket

How to order mounting bracket

Bore size (mm) / Mounting bracket	ø20	ø25	ø32	ø40
Axial foot (LB) rod side	M1-LB-20	M1-LB-30	M1-LB-30	M1-LB-30
Axial foot (LB) head side	M1-LBV-20	M1-LBV-30	M1-LBV-30	M1-LBV-40
Flange (FA)	M1-FA-20	M1-FA-30	M1-FA-30	M1-FA-30
Trunnion (TA)	M1-TA-20	M1-TA-30	M1-TA-30	M1-TA-40
Bolt for head side trunnion (TB)	M1-TB-20	M1-TB-30	M1-TB-30	M1-TB-40

*1 : With regard to mounting brackets, the axial foot rod side and the flange include mounting nuts and toothed washers, the trunnion includes mounting nuts, and the axial foot head side includes mounting bolts.
*2 : For material of the mounting bracket, refer to page 684.
3 : For axial foot, 1 set each of the above “M1-LB-” and “M1-LBV-*” is required.

SCP*3
CMK2
CMA2
SCM
SCG
SCA2
SCS2
CKV2
CAV2/COVP/N2
SSD2
SSG
SSD
CAT
MDC2
MVC
SMG
MSD/MSDG
FC*
STK
SRL3
SRG3
SRM3
SRT3
MRL2
MRG2
SM-25
ShkAbs
FJ
FK
Spd Contr
Ending

Internal structure and parts list

● CKV2-M (with switch)

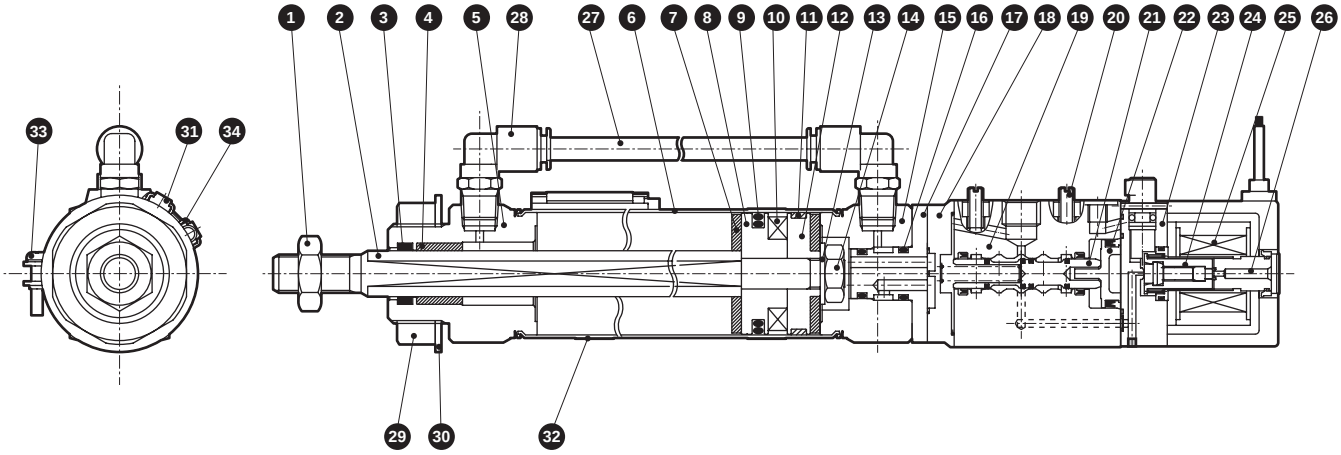

Cannot be disassembled

No.	Part name	Material	Remarks
1	Rod nut	Steel	Zinc chromate
2	Piston rod	Stainless steel	
3	Rod packing	Nitrile rubber	
4	Bush	Copper-based	
5	Rod cover	Aluminum alloy	
6	Cylinder tube	Stainless steel	
7	Cushion rubber	Urethane rubber	
8	Piston A	Aluminum alloy	
9	Piston packing	Nitrile rubber	
10	Magnet	Plastic	
11	Wear ring	Polyacetal	
12	Piston B	Aluminum alloy	
13	Spacer	Steel	Zinc chromate
14	Hexagon nut	Steel	Zinc chromate
15	Head cover	Aluminum alloy	
16	O-ring	Nitrile rubber	
17	Adaptor	Steel	Zinc chromate

No.	Part name	Material	Remarks
18	Cap	Aluminum alloy die-casting	Chromate
19	Valve body	Aluminum alloy	Alumite
20	Speed adjustment needle	Copper alloy	
21	Spool assembly	---	
22	Piston assembly	---	
23	Pilot valve body	Nylon	
24	Plunger assembly	---	
25	Coil assembly	---	
26	Core assembly	---	
27	Pass-pipe	Nylon	
28	Fitting	---	GWJL6-6
29	Nut	Steel	Zinc chromate
30	Toothed washer	Steel	Zinc chromate
With switch			
31	Switch body	---	
32	Band	Stainless steel	
33	Pan head machine screw	Stainless steel	
34	Switch rail	Stainless steel	

Dimensions

● Basic (00)

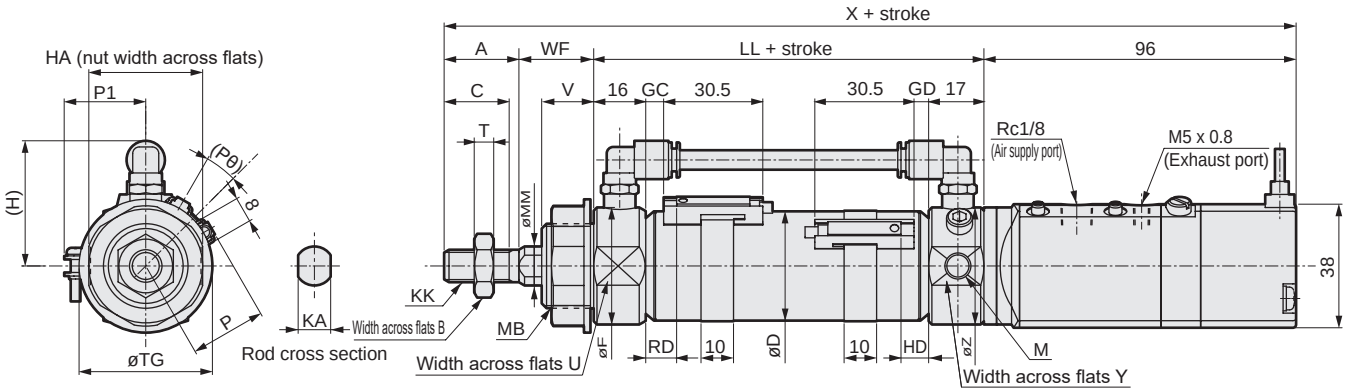

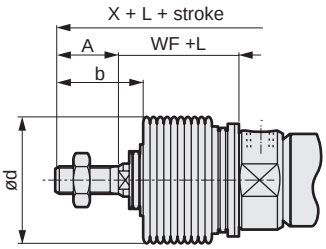

[With bellows]

*1: For dimensions of other mounting formats, refer to pages 686 to 690.
2: Refer to page 698 for HD, RD and protruding dimensions of T1, T8* and 2-color LED switches.
*3: For the dimensions of the accessories, refer to page 699.

Code	Basic (00) Basic dimensions																	
Bore size (mm)	A	B	C	D	F	(H)	HA	KA	KK	LL	M	MB	MM	T	TG	U	V	WF
ø20	20	13	18	21.4	28	38.5	26	8	M8x1.0	67	M8	M18x1.5	10	5	29	24	14	24
ø25	23	17	20	26.4	32	38.5	35	10	M10x1.25	70	M8	M26x1.5	12	6	41	30	16	23
ø32	23	17	20	33.6	36	38.5	35	10	M10x1.25	70	M8	M26x1.5	12	6	41	34	16	23
ø40	25	19	22	41.7	45	43.0	35	12	M12x1.5	74	M10	M26x1.5	14	7	41	43	16	23

Code				With switch											With bellows		
				T0, T5, T2, T3				T2W, T3W									
Bore size (mm)	X	Y	Z	GC	GD	RD	HD	GC	GD	RD	HD	P	P1	(Pθ)°	b	d	L
ø20	207	34	36	4	3	8	7	6	5	10	9	17.3	19.5	22	30	30	(Stroke/3) + 6
ø25	212	34	36	5.5	4.5	9.5	8.5	7.5	6.5	11.5	10.5	19.8	22.0	18	32	46	(Stroke/3.25) + 7
ø32	212	34	36	5.5	4.5	9.5	8.5	7.5	6.5	11.5	10.5	24.3	25.5	15	32	46	(Stroke/3.25) + 7
ø40	218	43	45	7.5	6.5	11.5	10.5	9.5	8.5	13.5	12.5	28.3	29.5	12	34	46	(Stroke/3.25) + 7

SCP*3
CMK2
CMA2
SCM
SCG
SCA2
SCS2
CKV2
CAV2/COVP/N2
SSD2
SSG
SSD
CAT
MDC2
MVC
SMG
MSD/MSDG
FC*
STK
SRL3
SRG3
SRM3
SRT3
MRL2
MRG2
SM-25
ShkAbs
FJ
FK
Spd Contr
Ending

CKV2 Series common dimensions (with T1*, T8* switches and 2-color LED switch)

● CKV2-**-**-T$^{2}_{3}$YH/V

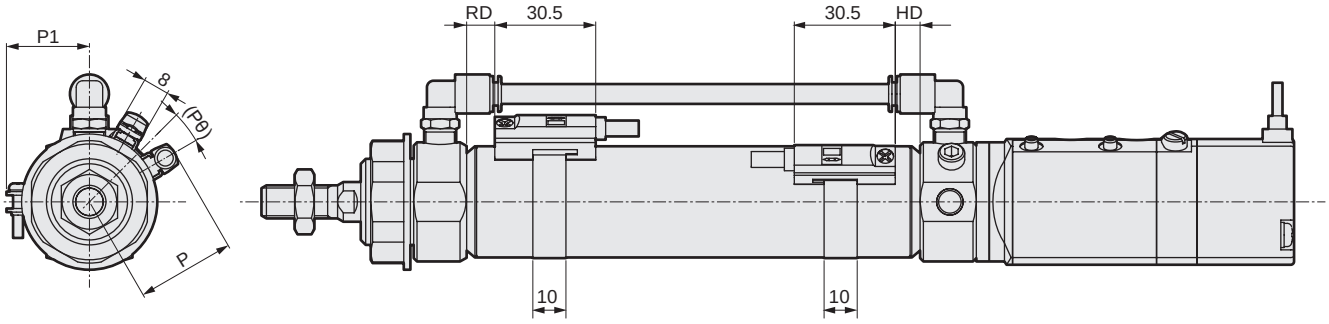

T1*, T8* switches and 2-color LED switch mounting dimensions

Code	1-color LED (T1, T8) 2-color LED (T$^{2}_{3}$Y)							
	RD		HD		P		P1	(Pθ)°
Bore size (mm)	T1, T$^{2}_{3}$Y	T8	T1, T$^{2}_{3}$Y	T8	T1	T$^{2}_{3}$Y, T8		
ø20	7.0	2.0	6.0	1	28.5	23.1	19.5	22
ø25	8.5	3.5	7.5	2.5	31.0	25.6	22.0	18
ø32	8.5	3.5	7.5	2.5	35.5	30.1	25.5	15
ø40	10.5	5.5	9.5	4.5	39.5	34.1	29.5	12

Accessory dimensions (rod eye/clevis bracket/pin)

● Rod eye (I) CAD

Material: Steel
Zinc chromate treatment

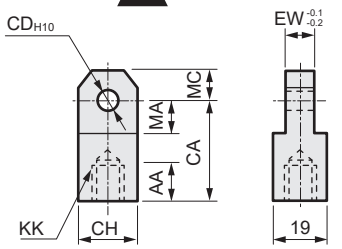

Model No.	Applicable bore size (mm)	AA	CA	CD	CH	EW	KK	MA	MC	Wt (g)
M1-I-20	ø20	14	30	10	19	8	M8x1.0	13	10	60
M1-I-30	ø25/ø32	14	36	12	25	10	M10x1.25	16	12	110
M1-I-40	ø40	14	36	12	25	10	M12x1.5	16	12	100

● Rod clevis (Y) CAD

Material: Steel
Zinc chromate treatment

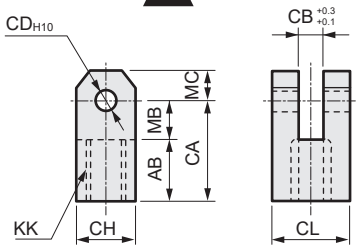

Model No.	Applicable bore size (mm)	AB	CA	CB	CD	CH	CL	KK	MB	MC	Wt (g)
M1-Y-20	ø20	17	30	8	10	19	19	M8x1.0	13	10	100
M1-Y-30	ø25/ø30	20	36	10	12	25	25	M10x1.25	16	12	210
M1-Y-40	ø40	20	36	10	12	25	25	M12x1.5	16	12	200

Note: A pin, a washer and a split pin are included.

● Clevis bracket (B2) CAD

Material: Steel, zinc chromate treatment

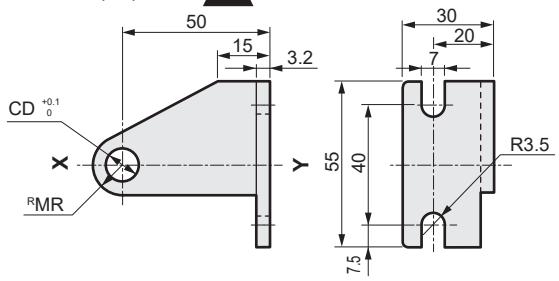

Model No.	Applicable bore size (mm)	CD	MR	Weight (g)
M1-B2-20-TA	ø20	8	8	130
M1-B2-30-TA	ø25/ø32/ø40	10	11	150

*1: One pair is composed of two pieces with XY symmetry.
*2: The snap ring and pin are not included.

● Rod clevis pin (P) CAD

Material: Steel
Zinc chromate treatment

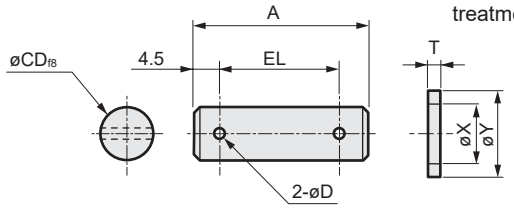

Model No.	Applicable bore size (mm)	A	D	CD	EL	T	X	Y	Wt (g)
M1-P-20	ø20	37	4	10	28	1.6	10.5	18	30
M1-P-30	ø25/ø32/ø40	46	4	12	37	2.5	12.5	22	50

Note: A pin, a washer and a split pin for rod clevis use are included with the product.

● Clevis bracket (B3) CAD

Material: Steel, zinc chromate treatment

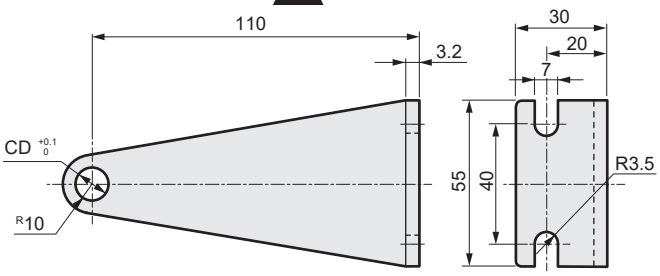

Model No.	Applicable bore size (mm)	CD	Weight (g)
M1-B3-20-TA	ø20	8	370
M1-B3-30-TA	ø25/ø32/ø40	10	360

Note: The snap ring and pin are not included.

● Rod end nut (NR)

Material: Steel
Zinc chromate treatment

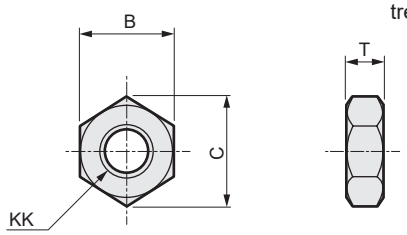

Model No.	Applicable bore size (mm)	B	C	KK	T	Weight (g)
M1-NR-20	ø20	13	15	M8x1.0	5	3
M1-NR-30	ø25/ø32	17	19.6	M10x1.25	6	7
M1-NR-40	ø40	19	21.9	M12x1.5	7	9

● Silencer (SL-M5)
* Sales unit is 2 pieces/bag.

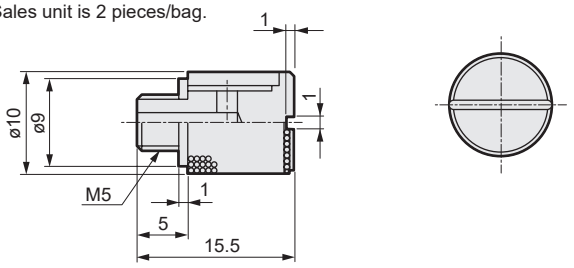

How to wire

Grommet	DIN terminal (U) / Lamp (E)
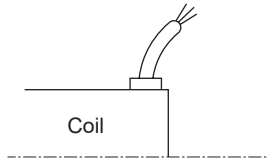	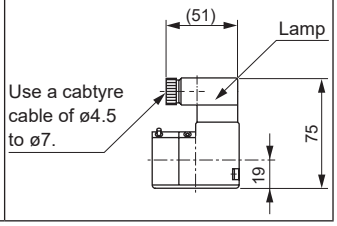

*1 : Lights and surge suppressors cannot be built into grommets.
*2 : Refer to "How to wire the terminal box" on page 701 when connecting the wires to the DIN terminal box.

Safety Precautions

Be sure to read this section before use.
Refer to Intro Page 73 for general information of the cylinder, and to Intro Page 80 for general information of the cylinder switch.

Product-specific cautions: Compact cylinder with valve CKV2 Series

Design/selection

WARNING

■ An inhale effect may be generated at the exhaust port of the valve due to valving element operation, causing the intake of foreign matter near the exhaust port. Foreign matter may also enter when the exhaust port is pointed upwards.
Install a silencer and/or arrange the piping of the exhaust port to open facing downward.
● The actuator will not operate correctly if the exhaust air is not discharged smoothly.

CAUTION

■ Check for leakage current to avoid malfunction caused by leakage current from other fluid control components.
● When a programmable controller is used, leakage current may affect the valve and cause a malfunction.
● The values affected by leakage current depend on the voltage type. Refer to the table below.

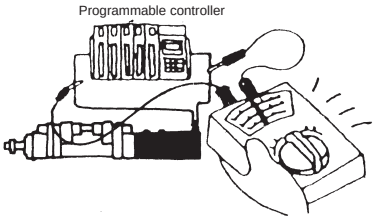

Reference

Using 100 VAC	3.0 mA or less
Using 200 VAC	1.5 mA or less
Using 24 VDC	1.8 mA or less

■ Switch the valve at least once every 30 days to prevent malfunction.

■ Although the contact service life of the reed switch varies depending on usage conditions, it will generally last several million cycles. The contact service life is reached sooner if the device is used continuously or operated at a high frequency. In this case, use a proximity switch with no contact.

Mounting, installation and adjustment

WARNING

■ Manual operation causes the connected device to function. Make sure that there is no danger before performing manual operation.
If you have activated the manual override of the valve, return it to the origin (OFF position) before operating the equipment.
If compressed air is supplied when not at origin, the cylinder will become operational, creating hazardous conditions.

[Example]

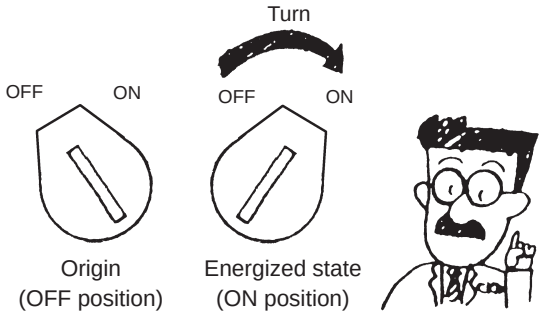

CAUTION

■ Be careful not to hit the solenoid valve with a tool or the equipment during mounting.

■ Do not support the cylinder with pipes during mounting.

■ Do not pick up the product by the coil lead wire.
● This may lead to disconnection.

■ Polarity
All series are without polarity. (Non-polar)

■ Applied voltage
When wiring the valve, check that the voltage type (AC or DC) and voltage are correct. Failure to comply may cause defective operation or burnout of the coil.

■ Checking wiring
After wiring, check that the connections are correct.

Use/maintenance

1. Common

⚠ WARNING

■ Manual operation causes the connected device to function. Make sure that there is no danger before performing manual operation.

⚠ CAUTION

■ Infrequent use

● Switch the valve at least once every 30 days to prevent malfunction.

■ After disassembling and assembling the valve, be sure to check normal valve operation with the following procedure.

Work procedure

1. Check that the manual override is at the origin (OFF position).
2. Configure the unit to low pressure. (0.15MPa)
3. Switch the manual override to the operation side (ON position) to check that the cylinder is operational.
4. Return the manual override to the initial position (OFF position) and check that the cylinder returns. (Manual operation check is complete.)
5. Check the operation electrically.
   ● After manual operation check, energize/de-energize to confirm operation.

■ With the DIN terminal box, as the ambient temperature is high and the gaskets will deteriorate due to heat when used with continuously powered specifications, be sure to regularly replace the gaskets.

■ Switching between push and pull when energized

(1) Loosen the adaptor set screws and the cross-recessed flat head machine screw.
(2) Rotate only the adaptor by 180 degrees in the direction of the arrow. (←●: Rotation direction)
(3) Fasten the cross-recessed flat head machine screws (tightening torque 1.7 N·m) and the adaptor set screws (tightening torque 9 N·m).

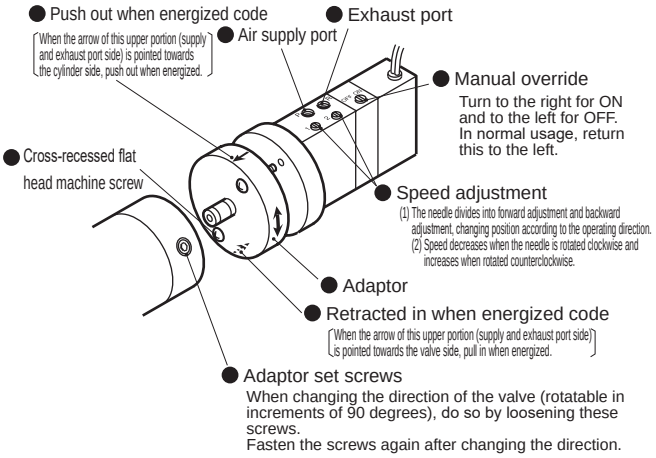

Speed adjustment / Operating direction	Forward adjustment	Backward adjustment
Push out when energized	1	2
Pull when energized	2	1

■ How to wire the terminal box

Wire the terminal box with steps (1) to (3) referring to the figure below.

(1) Pass the cabtyre cable ❼ through the cap ❹, washer ❺ and gasket ❻ in order, and insert into the case ❷.
(2) When using a crimping terminal, prepare the cabtyre cable ❼ at an appropriate length as illustrated and crimp the crimping terminal ❾ on the end thereof.
(3) Remove the screws ❿ from the terminal block ❸, pass through the crimping terminal ❾ (loosen and crimp when using a Y type terminal), and fasten the screws ❿ again.

(Note) Fasten the screw with a tightening torque of 0.5 N·m ±15%.

Remarks: ● It is possible to wire the terminals with bare wires. In this case, loosen the screws ❿, place the lead wires in the bracket, and fasten the screws again.
● The orientation of the cord can be changed by pulling out the terminal block from the case, rotating it by 180°, and returning the block to the case.
● The crimping terminals ❾ listed in the table below can be used.

Nichifu Terminal Industries Co., Ltd.		Fuji Terminal Industry Co., Ltd.		J.S.T. Mfg Co., Ltd.	
O terminal	Y terminal	O terminal	Y terminal	O terminal	Y terminal
0.3-3 1.25-3 1.25-3S	0.3-3 1.25Y-3 1.25Y-3.5	1.25-3	1.25-YAS3 1.25-YAS3.5	0.5-3 1.25-3	0.25-B3A 1.25-C3A

When using a product from a different manufacturer, be sure to use an equivalent item.

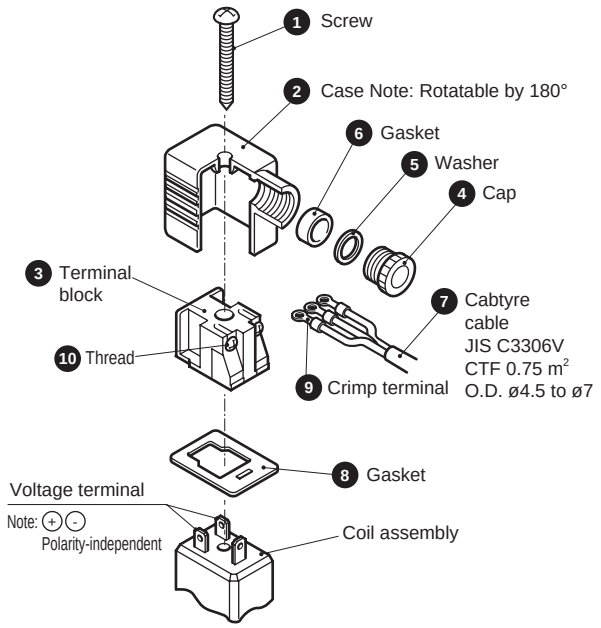

SCP*3
CMK2
CMA2
SCM
SCG
SCA2
SCS2
CKV2
CAV2/ COVP/N2
SSD2
SSG
SSD
CAT
MDC2
MVC
SMG
MSD/ MSDG
FC*
STK
SRL3
SRG3
SRM3
SRT3
MRL2
MRG2
SM-25
ShkAbs
FJ
FK
Spd Contr
Ending

2. Common (With T-switch)

⚠ CAUTION

■ When moving the switch position to the stroke direction

- The T2, T3, T0, and T5 switches can be fine-tuned by approximately ±3 mm from the default position of installation. If the adjusting range exceeds ±3 mm, or when fine-tuning the position of any other switch, move the position of the band.
- Loosen the switch fixing screw, shift the switch along the rail, then tighten at the specified position.
  When using T2, T3, T0, or T5, use a flathead screwdriver (clockwork screwdriver, precision screwdriver, etc.) with a grip diameter of 5 to 6 mm, a 2.4 mm or smaller tip, and a thickness of 0.3 mm or less to tighten the screws with a tightening torque of 0.1 to 0.2 N·m.
  When using T1, T*C, T2J, T2Y, T3Y, or T8, tighten the screw with a tightening torque of 0.5 to 0.7 N·m.
- The switch bracket rail has a marking 4 mm from the rail end. Use as a guide to the mounting position when replacing the switch.
  Switch rail markings are set to the default switch max. sensitivity position.
  The max. sensitivity position will change when the switch is changed or when the band is moved. Adjust the position accordingly in this case.

■ When moving the switch position to the circumferential direction

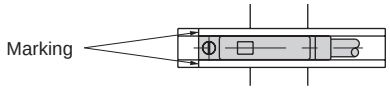

- Loosen the band fixing screw, shift the switch rail in the circumferential direction, then tighten at the specified position.
  Tightening torque is 0.6 to 0.8 N·m.

■ Shifting the band position

- Loosen the band fixing screw, shift the switch rail and band along the cylinder tube, and tighten at the specified position.
  Tightening torque is 0.6 to 0.8 N·m.

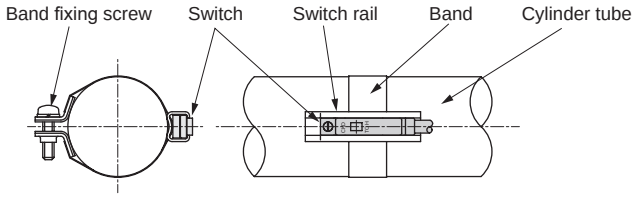

CAV2/COV$^{P}_{N}$2

Cylinder with valve

ø50/ø75/ø100

With valve

Overview

Cylinder with valve available in three bore sizes (ø50, ø75 and ø100).
Lubrication/no-lubrication and single solenoid/double solenoid can be selected.

The cylinder switches T2YH, T2YV, T3YH, and T3YV are scheduled for end of production at the end of December 2023.

CONTENTS

Series variation 704
Product introduction 707
Variation and option combination selection table 706
Operational explanation 708

- Double acting/double solenoid/lubrication (CAV2) 710
- Double acting/single solenoid/push out when energized/lubrication (COVP2) 710
- Double acting/single solenoid/pull when energized/lubrication (COVN2) 710
- Double acting/double solenoid/no-lubrication (CAV2-N) 710
- Double acting/single solenoid/push out when energized/no-lubrication (COVP2-N) 710
- Double acting/single solenoid/pull when energized/no-lubrication (COVN2-N) 710

Short total length with cushion

- Double acting/double solenoid/lubrication (CAV2-S) 710
- Double acting/single solenoid/push out when energized/lubrication (COVP2-S) 710
- Double acting/single solenoid/pull when energized/lubrication (COVN2-S) 710
- Double acting/double solenoid/no-lubrication (CAV2-NS) 710
- Double acting/single solenoid/push out when energized/lubrication (COVP2-NS) 710
- Double acting/single solenoid/pull when energized/lubrication (COVN2-NS) 710

CAV2/COV2 $^{P}_{N}$ Series common accessory dimensions 739
⚠ Safety precautions 740

Series variation

Cylinder with valve CAV2/COV$^{P}_{N}$2 Series

Variation	Model No. JIS symbol	Bore size (mm)	Standard stroke (mm) 50	75	100	150	200	300	Min. stroke (mm)	Max. stroke (mm)	Available stroke (mm)	Custom stroke (per mm)
Double acting/ double solenoid, lubrication	CAV2 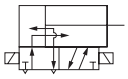	ø50	●	●	●	●	●	●	1	500	1000	1
		ø75	●	●	●	●	●	●		600		
		ø100	●	●	●	●	●	●		800		
Double acting/single solenoid, push out when energized lubrication	COVP2 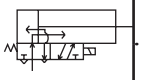	ø50	●	●	●	●	●	●	1	500	1000	1
		ø75	●	●	●	●	●	●		600		
		ø100	●	●	●	●	●	●		800		
Double acting/single solenoid, pull when energized, lubrication	COVN2 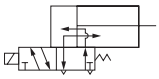	ø50	●	●	●	●	●	●	1	500	1000	1
		ø75	●	●	●	●	●	●		600		
		ø100	●	●	●	●	●	●		800		
Double acting/ double solenoid, no-lubrication	CAV2-N 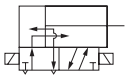	ø50	●	●	●	●	●	●	1	500	1000	1
		ø75	●	●	●	●	●	●		600		
		ø100	●	●	●	●	●	●		800		
Double acting/single solenoid, push out when energized no-lubrication	COVP2-N 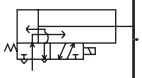	ø50	●	●	●	●	●	●	1	500	1000	1
		ø75	●	●	●	●	●	●		600		
		ø100	●	●	●	●	●	●		800		
Double acting/single solenoid, pull when energized, no-lubrication	COVN2-N 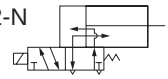	ø50	●	●	●	●	●	●	1	500	1000	1
		ø75	●	●	●	●	●	●		600		
		ø100	●	●	●	●	●	●		800		
Double acting/double solenoid, with cushion, short overall length	CAV2-S CAV2-NS 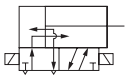	ø50	●	●	●	●	●	●	1	500	1000	1
		ø75	●	●	●	●	●	●		600		
		ø100	●	●	●	●	●	●		800		
Double acting/single solenoid, push out when energized, with cushion, short overall length	COVP2-S COVP2-NS 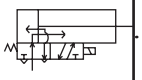	ø50	●	●	●	●	●	●	1	500	1000	1
		ø75	●	●	●	●	●	●		600		
		ø100	●	●	●	●	●	●		800		
Double acting/single solenoid, pull when energized, with cushion, short overall length	COVN2-S COVN2-NS 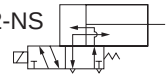	ø50	●	●	●	●	●	●	1	500	1000	1
		ø75	●	●	●	●	●	●		600		
		ø100	●	●	●	●	●	●		800		

●: Standard ◎: Option : Not available

Mounting					Cushion		Option						Accessory			Switch	Page
Axial foot	Rod side flange	Eye bracket	Intermediate trunnion, shaft	Intermediate trunnion, supporting hole	Without cushion	Both sides cushioned	Bellows (100°C)	Round terminal box	Square terminal box	With muffler	Molded coil	Air supply block	Rod eye	Rod clevis	Clevis bracket		
LB	FA	CA	TC	TF	N	B	J	TB1	TB2	MF1	Z	Q	I	Y	B2		
●	●	●	●	●	●	●	◎	◎	◎	◎	◎	◎	◎	◎	◎	◎	710
●	●	●	●	●	●	●	◎	◎	◎	◎	◎	◎	◎	◎	◎		
●	●	●	●	●	●	●	◎	◎	◎	◎	◎	◎	◎	◎	◎		
●	●	●	●	●	●	●	◎	◎		◎	●	◎	◎	◎	◎	◎	710
●	●	●	●	●	●	●	◎	◎		◎	●	◎	◎	◎	◎		
●	●	●	●	●	●	●	◎	◎		◎	●	◎	◎	◎	◎		
●	●	●	●	●	●	●	◎	◎		◎	●	◎	◎	◎	◎	◎	710
●	●	●	●	●	●	●	◎	◎		◎	●	◎	◎	◎	◎		
●	●	●	●	●	●	●	◎	◎		◎	●	◎	◎	◎	◎		
●	●	●	●	●	●	●	◎	◎	◎	●	◎	◎	◎	◎	◎	◎	710
●	●	●	●	●	●	●	◎	◎	◎	●	◎	◎	◎	◎	◎		
●	●	●	●	●	●	●	◎	◎	◎	●	◎	◎	◎	◎	◎		
●	●	●	●	●	●	●	◎	◎		●	●	◎	◎	◎	◎	◎	710
●	●	●	●	●	●	●	◎	◎		●	●	◎	◎	◎	◎		
●	●	●	●	●	●	●	◎	◎		●	●	◎	◎	◎	◎		
●	●	●	●	●	●	●	◎	◎		●	●	◎	◎	◎	◎	◎	710
●	●	●	●	●	●	●	◎	◎		●	●	◎	◎	◎	◎		
●	●	●	●	●	●	●	◎	◎		●	●	◎	◎	◎	◎		
●	●	●	●	●		●	◎	◎	◎	Lubrication ◎ / No lubrication ●	◎	◎	◎	◎	◎	◎	710
●	●	●	●	●		●	◎	◎	◎	Lubrication ◎ / No lubrication ●	◎	◎	◎	◎	◎		
●	●	●	●	●		●	◎	◎	◎	Lubrication ◎ / No lubrication ●	◎	◎	◎	◎	◎		
●	●	●	●	●		●	◎	◎		Lubrication ◎ / No lubrication ●	●	◎	◎	◎	◎	◎	710
●	●	●	●	●		●	◎	◎		Lubrication ◎ / No lubrication ●	●	◎	◎	◎	◎		
●	●	●	●	●		●	◎	◎		Lubrication ◎ / No lubrication ●	●	◎	◎	◎	◎		
●	●	●	●	●		●	◎	◎		Lubrication ◎ / No lubrication ●	●	◎	◎	◎	◎	◎	710
●	●	●	●	●		●	◎	◎		Lubrication ◎ / No lubrication ●	●	◎	◎	◎	◎		
●	●	●	●	●		●	◎	◎		Lubrication ◎ / No lubrication ●	●	◎	◎	◎	◎		

Variation and option combination selection table

◎: Option
○: Available (made-to-order product)
△: Available depending on conditions (Contact CKD.)
x: Not available

Category		Category	Variation							Port thread			Option						
			Double acting basic (lubrication)	No lubrication	Short overall length	Double solenoid	Single solenoid	Cushioned	With cylinder switch	NPT	G		Neoprene with bellows	Round terminal box	Square terminal box	With muffler	Molded coil	Intake block	Specify piston rod end form
		Code	None	N	S	CAV2	COV*2	None	None	N	G		J	TB1	TB2	MF1	Z	Q	N*
Variation	Double acting basic (lubrication)	Blank			◎	◎	◎	◎	◎	○	○		◎	◎	◎	◎	◎	◎	○
Variation	No lubrication	N			◎	◎	◎	◎	◎	○	○		◎	◎	◎	x	◎	◎	○
Variation	Short overall length	S				◎	◎	*1	◎	○	○		◎	◎	◎	◎	◎	◎	○
Variation	Double solenoid	CAV2						◎	◎	○	○		◎	◎	◎	◎	◎	◎	○
Variation	Single solenoid	COV*2						◎	◎	○	○		◎	◎	x	◎	*2	◎	○
Variation	Cushioned	Blank							◎	○	○		◎	◎	◎	◎	◎	◎	○
Variation	With cylinder switch	Blank								○	○		◎	◎	◎	◎	◎	◎	○
Port thread	NPT	N									x		○	○	○	○	○	○	○
Port thread	G	G											○	○	○	○	○	○	○
Option	Neoprene with bellows	J												◎	◎	◎	◎	◎	○
Option	Round terminal box	TB1													x	◎	◎	x	○
Option	Square terminal box	TB2														◎	◎	x	○
Option	With muffler	MF1															◎	◎	○
Option	Molded coil	Z																x	○
Option	Intake block	Q																	○
Option	Specify piston rod end form	N*																	
Accessory	Cylinder switch	Listed separately	◎	◎	◎	◎	◎	◎	◎	○	○		◎	◎	◎	◎	◎	◎	○
Accessory	Rod eye	I	◎	◎	◎	◎	◎	◎	◎	○	○		◎	◎	◎	◎	◎	◎	△
Accessory	Rod clevis	Y	◎	◎	◎	◎	◎	◎	◎	○	○		◎	◎	◎	◎	◎	◎	△
Accessory	Clevis bracket	B2	◎	◎	◎	◎	◎	◎	◎	○	○		◎	◎	◎	◎	◎	◎	○

*1: Short overall length is available only for the type with cushion.
*2: COV*2 coil is molded as standard.

[Example of model No.]

CAV2 - N S - LB - 50 B - 100 - 1 - T0H - D - J I

- CAV2: Model No.
- N S: Variation
  * List in order from left to right in the left table.
- LB: A Mounting
- 50: B Bore size
- B: C Port thread
- B: D Cushion
- 100: E Stroke
- 1: F Voltage
- T0H: G Switch model No.
- D: H Switch quantity
- J: I Option
- I: J Accessory
  * List in order from left to right in the left table.

Model No.: Cylinder with valve

- Variation: No lubrication, with cushion, short overall length
- A Mounting : Axial foot
- B Bore size : ø50 mm
- C Port thread : Rc thread
- D Cushion : Both sides cushioned
- E Stroke : 100 mm
- F Voltage : 100 VAC
- G Switch model No.: Reed T0H switch, lead wire 1m
- H Switch quantity : 2
- I Option : Bellows for max. ambient temperature 60°C
- J Accessory : Rod eye

Product introduction

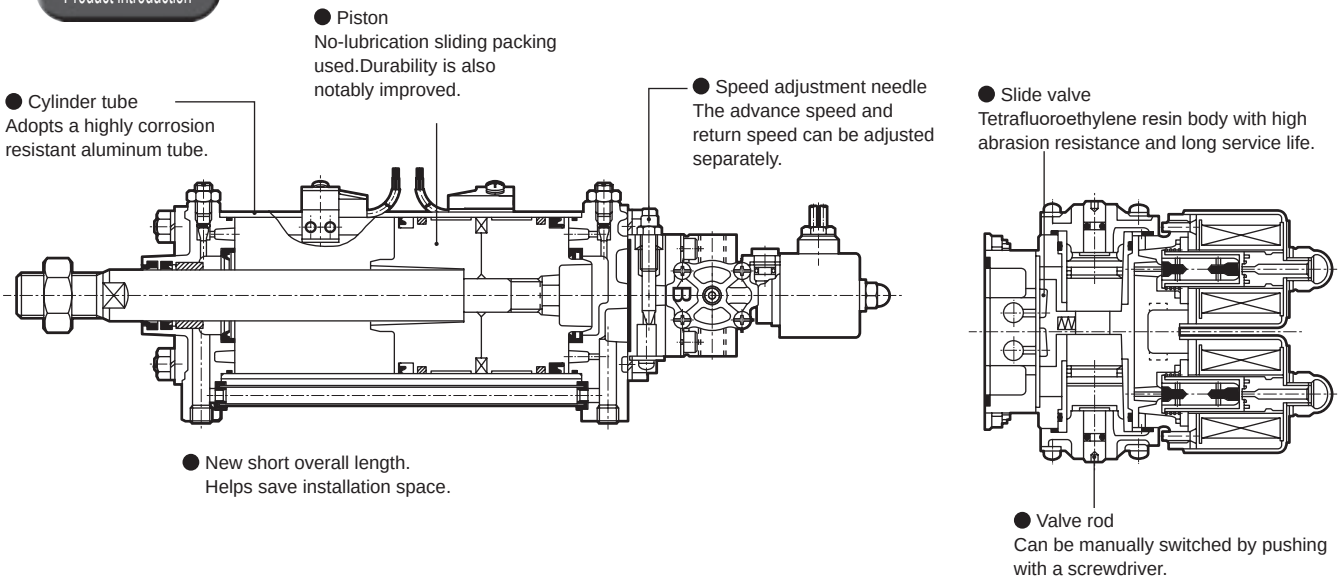

Operational explanation

Air supply Exhaust ● For explanation purposes, the valve position is rotated 90° counterclockwise when viewed from the piston rod side.

● CAV2/CAV2-N/CAV2-S/CAV2-NS

A Piston rod push type

1. When the solenoid S1 is energized, the plunger is suctioned.
2. The orifice opens, air moves the spool and the slide valve moves down.
3. Soon the air passes the exhaust block and enters the cylinder, pushing the piston rod.
4. As the spool is self-held after the solenoid valve S1 is de-energized, the piston rod remains protruding.

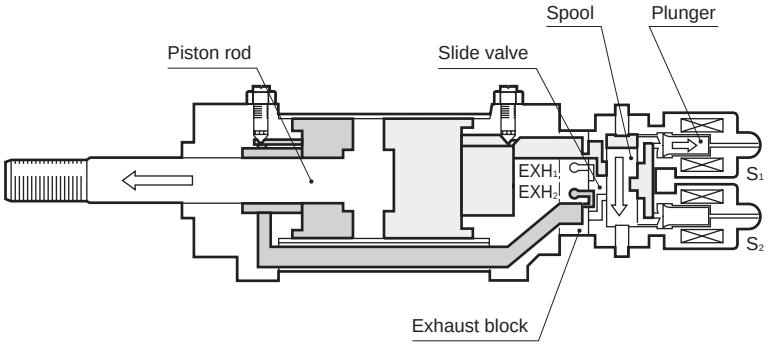

B Piston rod pull type

1. When the solenoid S2 is energized, the plunger is suctioned.
2. The orifice opens, air moves the spool and the slide valve moves up.
3. Soon the air passes the exhaust block and pass-pipe and enters the cylinder, pulling the piston rod.
4. As the spool is self-held after the solenoid valve S2 is de-energized, the piston rod remains retracted.

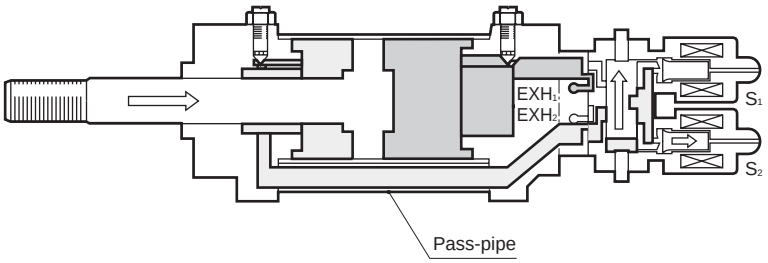

● C0V$^{P}_{N}$2/COV$^{P}_{N}$2-N/C0V$^{P}_{N}$2-S/COV$^{P}_{N}$2-NS

The explanation below is for the type of push when energized (P). The type retracted in when energized (N) operates in the reverse direction.

A When the solenoid valve is energized

1. When the solenoid valve is energized, the plunger is suctioned and the orifice opens.
2. The force on the upper side of the spool becomes larger than that on the lower side and moves the spool. The slide valve moves down. (This occurs due to difference of the pressurized areas.)
3. Soon the air passes the exhaust block and enters the cylinder, pushing the piston rod.

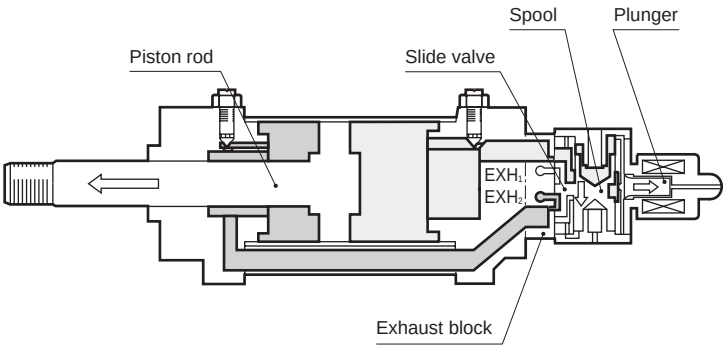

B When the solenoid valve is deenergized

1. When the solenoid valve is deenergized, the plunger is pushed down by the spring and closes the orifice.
2. As compressed air does not flow into the upper side of the spool, the force on the lower side of the spool becomes larger and moves the spool. The slide valve moves up.
3. Soon the air passes the exhaust block and pass-pipe and enters the cylinder, pulling the piston rod.

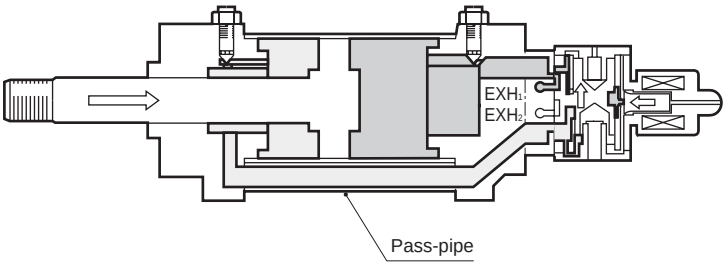

C How to switch push out when energized and retracted in when energized

*1:The factory setting is push when energized.

⚠ CAUTION

*1: Be sure to stop air before switching.

1. Loosen and remove the screws of the cap Ⓑ and fixing piston Ⓐ (four screws each) with a Phillips screwdriver as shown in Fig. 1.
2. Switch the positions of the cap Ⓑ and fixing piston Ⓐ as shown in Fig. 2 and tighten the screws.

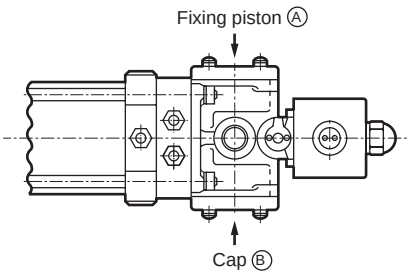

Fig. 1 Push when energized

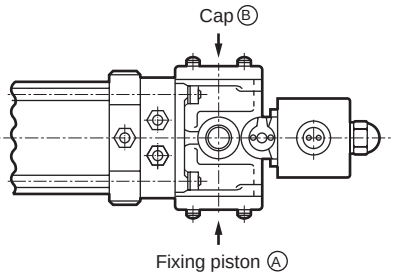

Fig. 2 Retracted in when energized

MEMO

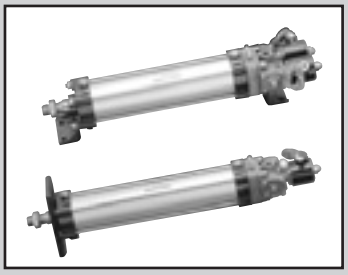

Cylinder with valve

CAV2(-S)/CAV2-N(S) COV$^{P}_{N}$2(-S)/COV$^{P}_{N}$2-N(S) Series

● Bore size: ø50/ø75/ø100

JIS symbol

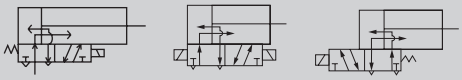

RoHS CAD

Specifications

Item		CAV2 CAV2-S			CAV2-N CAV2-NS			COV$^{P}_{N}$2 COV$^{P}_{N}$2-S			COV$^{P}_{N}$2-N COV$^{P}_{N}$2-NS		
Bore size	mm	ø50	ø75	ø100	ø50	ø75	ø100	ø50	ø75	ø100	ø50	ø75	ø100
Actuation		Double acting/with valve											
Number of solenoid valves		Double solenoid						Single solenoid					
Working fluid		Compressed air											
Max. working pressure	MPa	0.7 (≈100 psi, 7 bar)											
Min. working pressure	MPa	0.15 (≈22 psi, 1.5 bar)											
Proof pressure	MPa	1 (≈150 psi, 10 bar)											
Ambient temperature	°C	5 (41°F) to 40 (104°F)											
Port size		Rc1/4											
Stroke tolerance	mm	$^{+0.9}_{0}$ (to 360), $^{+1.4}_{0}$ (361 to)											
Working piston speed	mm/s	50 to 750	50 to 450	50 to 250	50 to 750	50 to 450	50 to 250	50 to 750	50 to 450	50 to 250	50 to 750	50 to 450	50 to 250
Cushion		With or without cushion can be selected											
Effective air cushion length	mm	6.5	6.5	5	6.5	6.5	5	6.5	6.5	5	6.5	6.5	5
Lubrication	(*1)	Required			Not required			Required			Not required		
Allowable absorbed energy J	With cushion	1.37	3.33	10.3	1.37	3.33	10.3	1.37	3.33	10.3	1.37	3.33	10.3
	Without cushion	0.072	0.154	0.154	0.072	0.154	0.154	0.072	0.154	0.154	0.072	0.154	0.154
		Without any cushion, this product cannot absorb large energy generated by an external load. We recommend using an external shock absorber.											

*1: Use turbine oil class 1 ISO VG32 if necessary for lubrication.

Valve specifications

Valve specifications		
Rated voltage (V)	100 VAC(50/60 Hz)	200 VAC(50/60 Hz)
Starting current (A)	0.29/0.27	0.15/0.14
Holding current (A)	0.11/0.09	0.06/0.04
Power consumption (W)	6/5	6/5
Voltage fluctuation range	±10%	
Thermal class	Type A (CAV2)	Type B (COV$^{P}_{N}$2)

Stroke

Bore size (mm)	Standard stroke (mm)	Max. stroke (mm)	Available stroke (mm)	Min. stroke (mm)
ø50	50/75/100 150/200/300	500	1000	1
ø75		600		
ø100		800		

*1: The custom stroke is available in 1 mm increments.

Min. stroke with T0/T5/T8 switches

● CAV2/COV2(N) without cushion (Unit: mm)

	Different surface mounting				Same surface mounting				Center trunnion mounting			
Switch quantity	1	2	3	4	1	2	3	4	1	2	3	4
ø50	9(9)	18(18)	35(35)	53(53)	9(9)	18(18)	49(48)	81(79)	215(215)	215(215)	215(215)	215(215)
ø75	10(10)	19(19)	38(38)	57(57)	10(10)	19(19)	51(50)	82(81)	193(193)	193(193)	193(193)	193(193)
ø100	10(10)	19(19)	38(38)	57(57)	10(10)	19(19)	51(50)	82(81)	83(71)	83(71)	83(73)	83(73)

*1: The values in ( ) are of T*V (L-shaped lead wire).
*2: When the stroke is 15 mm or less, the two switches could turn ON at the same time. In this case, adjust switch mounting positions to be as far apart as possible.

● CAV2/COV2(B) with cushion (Unit: mm)

	Different surface mounting								Same surface mounting				Center trunnion mounting			
Switch quantity	1		2		3		4		1	2	3	4	1	2	3	4
ø50	9	(9)	18	(18)	35	(35)	53	(53)	9(9)	18(18)	49(48)	81(79)	241(241)	241(241)	241(241)	241(241)
ø75	10	(10)	19	(19)	38	(38)	57	(57)	10(10)	19(19)	51(50)	82(81)	241(241)	241(241)	241(241)	241(241)
ø100	10	(10)	19	(19)	38	(38)	57	(57)	10(10)	19(19)	51(50)	82(81)	120(108)	120(108)	120(110)	120(110)

*1: The values in ( ) are of T*V (L-shaped lead wire).
*2: When the stroke is 15 mm or less, the two switches could turn ON at the same time. In this case, adjust switch mounting positions to be as far apart as possible.

Min. stroke with T1/T2/T3/T2Y/T3Y/T2W/T3W switches

● CAV2/COV2(N) without cushion (Unit: mm)

	Different surface mounting								Same surface mounting				Center trunnion mounting			
Switch quantity	1		2		3		4		1	2	3	4	1	2	3	4
ø50	5	(5)	10	(10)	20	(20)	30	(30)	5(5)	10(10)	50(48)	89(88)	76(46)	76(46)	76(47)	76(47)
ø75	5	(5)	11	(11)	21	(21)	32	(32)	5(5)	11(11)	50(49)	90(88)	54(24)	54(24)	54(26)	54(26)
ø100	6	(6)	12	(12)	23	(23)	35	(35)	6(6)	12(12)	51(50)	91(89)	84(54)	84(54)	84(58)	84(58)

*1: The values in ( ) are of T*V (L-shaped lead wire).
*2: When the stroke is 15 mm or less, the two switches could turn ON at the same time. In this case, adjust switch mounting positions to be as far apart as possible.

● CAV2/COV2(B) with cushion (Unit: mm)

	Different surface mounting								Same surface mounting				Center trunnion mounting			
Switch quantity	1		2		3		4		1	2	3	4	1	2	3	4
ø50	5	(5)	10	(10)	20	(20)	30	(30)	5(5)	10(10)	50(48)	89(88)	102(72)	102(72)	102(73)	102(73)
ø75	5	(5)	11	(11)	21	(21)	32	(32)	5(5)	11(11)	50(49)	90(88)	102(72)	102(72)	102(74)	102(74)
ø100	6	(6)	12	(12)	23	(23)	35	(35)	6(6)	12(12)	51(50)	91(89)	121(91)	121(91)	121(95)	121(95)

*1: The values in ( ) are of T*V (L-shaped lead wire).
*2: When the stroke is 15 mm or less, the two switches could turn ON at the same time. In this case, adjust switch mounting positions to be as far apart as possible.

SCP*3
CMK2
CMA2
SCM
SCG
SCA2
SCS2
CKV2
CAV2/ COVP/N2
SSD2
SSG
SSD
CAT
MDC2
MVC
SMG
MSD/ MSDG
FC*
STK
SRL3
SRG3
SRM3
SRT3
MRL2
MRG2
SM-25
ShkAbs
FJ
FK
Spd Contr
Ending

Switch specifications

● 1-color/2-color LED/for AC magnetic field proof

Item	2-wire proximity				3-wire proximity				2-wire reed							2-wire proximity
	T1H/ T1V	T2H/T2V/ T2JH/ T2JV	T2YH/ T2YV	T2WH/ T2WV	T3H/ T3V	T3PH/ T3PV	T3YH/ T3YV	T3WH/ T3WV	TOH/TOV		T5H/T5V		T8H/T8V			T2YD T2YDT (*4)
Applications	For programmable controller, relay, compact solenoid valve	Dedicated for programmable controller			For programmable controller, relay				For programmable controller, relay		For programmable controller, relay, IC circuit (without indicator lamp), serial connection		For programmable controller, relay			Dedicated for programmable controller
Output method	-				NPN output	PNP output	NPN output		-							
Pwr. supp. V.	-				10 to 28 VDC				-							
Load voltage	85 to 265 VAC	10 to 30 VDC			30 VDC or less				12/24 VDC	110 VAC	5/12/24 VDC	110 VAC	12/24 VDC	110 VAC	220 VAC	24 VDC ±10%
Load current	5 to 100 mA	5 to 20 mA (*3)			100 mA or less		50 mA or less		5 to 50 mA	7 to 20 mA	50 mA or less	20 mA or less	5 to 50 mA	7 to 20 mA	7 to 10 mA	5 to 20 mA
Indicator	LED (Lit when ON)	LED (Lit when ON)	Red/green LED (Lit when ON)		LED (Lit when ON)	Yellow LED (Lit when ON)	Red/green LED (Lit when ON)		LED (Lit when ON)		No indicator lamp		LED (Lit when ON)			Red/green LED (Lit when ON)
Leakage current	≤ 1 mA at 100 VAC, ≤ 2 mA at 200 VAC	1 mA or less			10 μA or less				0 mA							1 mA or less
Weight g	1 m:33 3 m:87 5 m:142	1 m:18 3 m:49 5 m:80	1 m:33 3 m:87 5 m:142	1 m:18 3 m:49 5 m:80	1 m:18 3 m:49 5 m:80		1 m:33 3 m:87 5 m:142	1 m:18 3 m:49 5 m:80	1 m:18 3 m:49 5 m:80				1 m:33 3 m:87 5 m:142			1 m:61 3 m:166 5 m:272

*1 : Refer to Ending Page 1 for detailed switch specifications and dimensions.
*2 : Switches other than the above models, such as switches with connectors, are also available. Refer to Ending Page 1.
*3 : Max. load current: 20 mA at 25°C. The current is lower than 20 mA if the operating ambient temperature around the switch is higher than 25˚C. (5 to 10 mA at 60°C)
*4 : Switch for AC magnetic field (T2YD/T2YDT) cannot be used in DC magnetic field.

Cylinder weight

(Unit: kg)

Item/mounting	Product weight when stroke (S) = 0 mm									Switch weight (per switch)	Switch mounting bracket	S=100 mm Additional weight per
	With or without cushion	Foot LB		Flange FA		Clevis CA		Trunnion TC/TF				
Bore size (mm)		CAV2 CAV2-S	COV$^{P}_{N}$2 COV$^{P}_{N}$2-S	CAV2 CAV2-S	COV$^{P}_{N}$2 COV$^{P}_{N}$2-S	CAV2 CAV2-S	COV$^{P}_{N}$2 COV$^{P}_{N}$2-S	CAV2 CAV2-S	COV$^{P}_{N}$2 COV$^{P}_{N}$2-S			
ø50	B (Yes)	2.1	1.9	2.3	2.1	2.2	2.0	2.4	3.2	Refer to the weight in the switch specifications.	0.024	0.50
	N (Without)	1.9	2.2	2.1	1.9	2.0	1.8	2.2	2.0			
ø75	B (Yes)	3.6	4.5	3.8	3.6	4.3	4.1	4.3	4.1		0.020	1.20
	N (Without)	3.3	3.1	3.5	3.3	4.0	3.8	4.0	3.8			
ø100	B (Yes)	4.7	10.2	5.7	5.9	5.5	5.7	7.1	7.3		0.026	1.50
	N (Without)	4.1	6.4	5.1	5.3	4.9	5.1	6.5	6.7			

(Example) CAV2-LB-50B-200-1-TOH-R

- Product weight when S = 0 mm …… 2.1 kg
- Additional weight when S = 200 mm… $0.50 \times \frac{200}{100} = 1.0$ kg
- Weight of 1 switch …… 0.018 kg
- Product weight …… 2.1 kg + 1.0 kg + 0.018 kg = 3.118 kg

Theoretical thrust table

(Unit: N)

Bore size (mm)	Operating direction	Working pressure MPa						
		0.15	0.2	0.3	0.4	0.5	0.6	0.7
ø50	Push	$2.95x10^2$	$3.93x10^2$	$5.89x10^2$	$7.85x10^2$	$9.82x10^2$	$1.18x10^3$	$1.37x10^3$
	Pull	$2.48x10^2$	$3.30x10^2$	$4.95x10^2$	$6.60x10^2$	$8.25x10^2$	$9.90x10^2$	$1.15x10^3$
ø75	Push	$6.63x10^2$	$8.84x10^2$	$1.33x10^3$	$1.77x10^3$	$2.21x10^3$	$2.65x10^3$	$3.09x10^3$
	Pull	$5.90x10^2$	$7.85x10^2$	$1.18x10^3$	$1.57x10^3$	$1.96x10^3$	$2.36x10^3$	$2.75x10^3$
ø100	Push	$1.18x10^3$	$1.57x10^3$	$2.36x10^3$	$3.14x10^3$	$3.93x10^3$	$4.71x10^3$	$5.50x10^3$
	Pull	$1.11x10^3$	$1.47x10^3$	$2.21x10^3$	$2.95x10^3$	$3.68x10^3$	$4.42x10^3$	$5.15x10^3$

How to order

No switch (built-in magnet for switch)

CAV2 - ○ - LB - 50 ○ B - 100 - 1 ———— J I

With switch (built-in magnet for switch)

CAV2 - ○ - LB - 50 ○ B - 100 - 1 - T0H - R - J I

Ⓐ Model No.
Ⓑ Variation
Ⓒ Mounting
Ⓓ Bore size
Ⓔ Port thread
Ⓕ Cushion
Ⓖ Stroke *1
Ⓗ Voltage
Ⓘ Switch model No.
Ⓙ Switch quantity
Ⓚ Option *3, *4 *8
Ⓛ Accessory *5, *6

Code	Description
Ⓐ Model No.	
CAV2	Double acting double solenoid
COVP2	Double acting single solenoid, push out when energized
COVN2	Double acting single solenoid, pull when energized
Ⓑ Variation	
Blank	Lubrication
N	No lubrication
S	Short overall length with cushion, lubrication
NS	Short overall length with cushion, no-lubrication
Ⓒ Mounting	
LB	Axial foot
FA	Rod side flange
CA	Clevis
TC	Intermediate trunnion (shaft)
TF	Intermediate trunnion (supporting hole)
Ⓓ Bore size (mm)	
50	ø50
75	ø75
100	ø100
Ⓔ Port thread	
Blank	Rc thread
N	NPT thread (made-to-order product)
G	G thread (made-to-order product)
Ⓕ Cushion	
B	Both sides cushioned
N	No cushion (cannot be selected for short overall length with cushion.)

Ⓖ Standard stroke (mm)

Bore size	Stroke *2	Available stroke	Custom stroke
ø50	1 to 500	1000	In 1 mm increments
ø75	1 to 600	1000	
ø100	1 to 800	1000	

Ⓗ Voltage	
Blank	When selecting Ⓚ Option "Q" air supply block
1	100 VAC
2	200 VAC
DC24V	24 VDC (made to order)
Ⓘ Switch model No.	
Refer to the switch model No. table on the following page.	
*** Lead wire length**	
Blank	1 m (standard)
3	3 m (option)
5	5 m (option)
Ⓙ Switch quantity	
R	1 on rod side
H	1 on head side
D	2
T	3

Ⓚ Option

		Max. ambient temp.	Instantaneous max. temp
J	Bellows	100°C	200°C
TB1	Round terminal box		
TB2	Square terminal box (cannot be selected for single solenoid.)		
MF1	With muffler (Lubrication only. Attached as standard with no-lubrication)		
Z	Molded coil (applicable to CAV2 only)		
Q	Air supply block		

Ⓛ Accessory	
I	Rod eye
Y	Rod clevis (with pin, washer, split pin)
B2	Clevis bracket (with pin, washer, split pin)

⚠ Precautions for model No. selection

*1 : A non-sag block is attached per 500 mm if the stroke is longer than 500 mm.
*2 : Refer to page 711 for the min. stroke with switch.
*3 : "TB2" is not available for the "CA" mounting of ø75 and ø100.
*4 : The instantaneous max. temperature is the temperature when sparks, cutting chips, etc., instantaneously contact the bellows.
*5 : "I" and "Y" cannot be selected together.
*6 : "B2" is not available for the "TC" and "TF" mounting.
*7 : If option "Q" is selected then the only other option available is "J".
*8 : Because COVP2 and COVN2 use a molded coil as standard, option Z is not available.

[Example of model No.]

CAV2-LB-50B-100-1-T0H-R-JY

Model: Cylinder with valve

Ⓐ Model No.	: Double acting double solenoid
Ⓑ Variation	: Lubrication
Ⓒ Mounting	: Axial foot
Ⓓ Bore size	: ø50 mm
Ⓔ Port thread	: Rc thread
Ⓕ Cushion	: Both sides cushioned
Ⓖ Stroke	: 100 mm
Ⓗ Voltage	: 100 VAC
Ⓘ Switch model No.	: Reed T0H switch, lead wire 1m
Ⓙ Switch quantity	: 1 on rod side
Ⓚ Option	: Bellows for max. ambient temperature 100°C
Ⓛ Accessory	: Rod clevis

[I] Switch model No.

T-switch model No.

Axial lead wire	Radial lead wire	Contact	Voltage AC	Voltage DC	Indicator	Lead wire
T0H*	T0V*	Reed	●	●	1-color LED	2-wire
T5H*	T5V*	Reed	●	●	No indicator lamp	2-wire
T8H*	T8V*	Reed	●	●	1-color LED	2-wire
T1H*	T1V*	Proximity	●		1-color LED	2-wire
T2H*	T2V*	Proximity		●	1-color LED	2-wire
T3H*	T3V*	Proximity		●	1-color LED	3-wire
T2WH*	T2WV*	Proximity		●	2-color LED	2-wire
T2YH*	T2YV*	Proximity		●	2-color LED	2-wire
T3WH*	T3WV*	Proximity		●	2-color LED	3-wire
T3YH*	T3YV*	Proximity		●	2-color LED	3-wire
T3PH*	T3PV*	Proximity		●	1-color LED	3-wire
T2YD*	-	Proximity		●	2-color LED for AC magnetic field	2-wire
T2YDT*	-	Proximity		●	2-color LED for AC magnetic field	2-wire
T2JH*	T2JV*	Proximity		●	1-color LED off-delay	2-wire

How to order switch

T-switch

● Switch body + mounting bracket set

CAV2 - T0H - 50

- 50 → Bore size (Item Ⓓ on page 714)
- T0H → Switch model No. (Item ① on page 714)

● Switch body only

SW - T0H

- T0H → Switch model No. (Item ① on page 714)

● Mounting bracket set

CAV2 - TS - 50

- 50 → Bore size (Item Ⓓ on page 714)
- TS → Mounting bracket

Mounting bracket model No.

Bore size (mm) / Mounting bracket	ø50	ø75	ø100
Foot (LB)	CAV2-50-LB	CAV2-75-LB	CAV2-100-LB
Flange (FA)	CAV2-50-FA	CAV2-75-FA	CAV2-100-FA
Clevis (CA)	CAV2-50-CA	CAV2-75-CA	CAV2-100-CA
Shaft trunnion (TC)	CAV2-50-TC	CAV2-75-TC	CAV2-100-TC
Supporting hole (TF)	CAV2-50-TF	CAV2-75-TF	CAV2-100-TF

*1: The model numbers above are for the mounting brackets only and do not include tie rods.

*2: The foot mounting bracket is provided as 2 pcs./set.

Valve model No.

Model No.		Model No.
CAV2	Lubrication	CAV2-ACTUATOR-*1
		CAV2-ACTUATOR-*1-Z (molded coil)
	No-lubrication	CAV2-N-ACTUATOR-*1
		CAV2-N-ACTUATOR-*1-Z (molded coil)
COVP2	Lubrication	COVP2-ACTUATOR-*1
	No-lubrication	COVP2-N-ACTUATOR-*1
COVN2	Lubrication	COVN2-ACTUATOR-*1
	No-lubrication	COVN2-N-ACTUATOR-*1

Note: Indicate voltage in *1.
1.....100 VAC, 2.....200 VAC

Piston speed

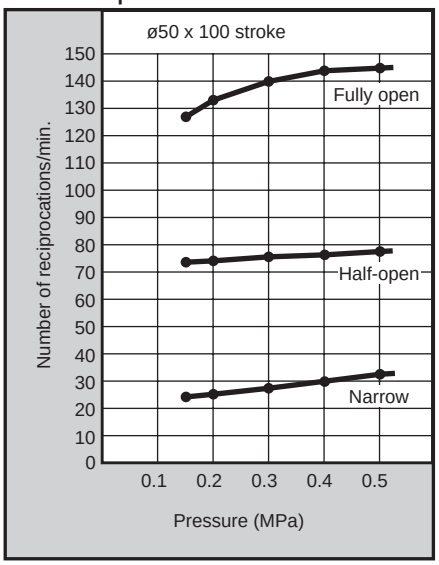

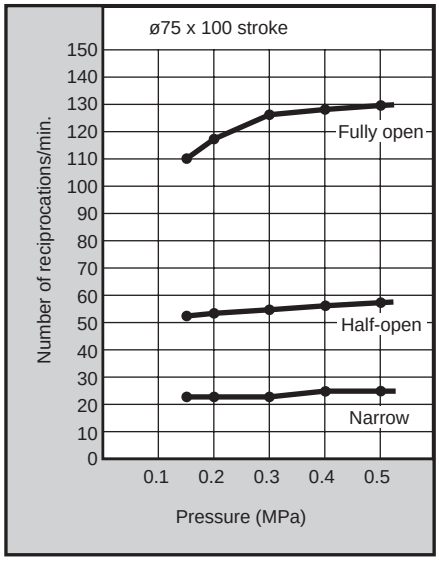

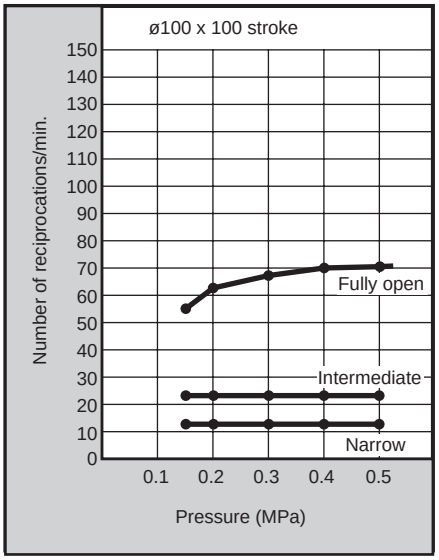

Note: Narrow, half-open and fully open are the degree of opening of the speed adjustment needle. The values are those without load.

Internal structure and parts list

● CAV2, COV$^{P}_{N}$2

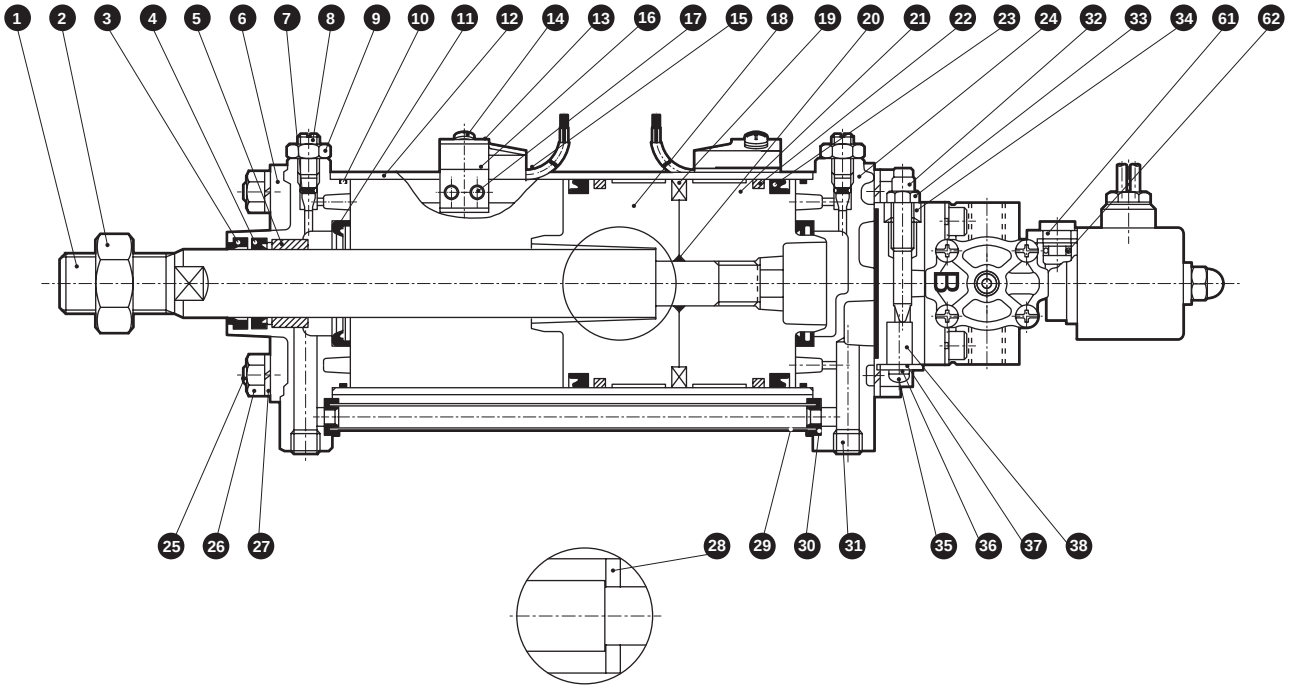

Cylinder bore size ø100 only

Washer 28 is built into the ○ part.

● CAV2, CAV2-N (double solenoid)

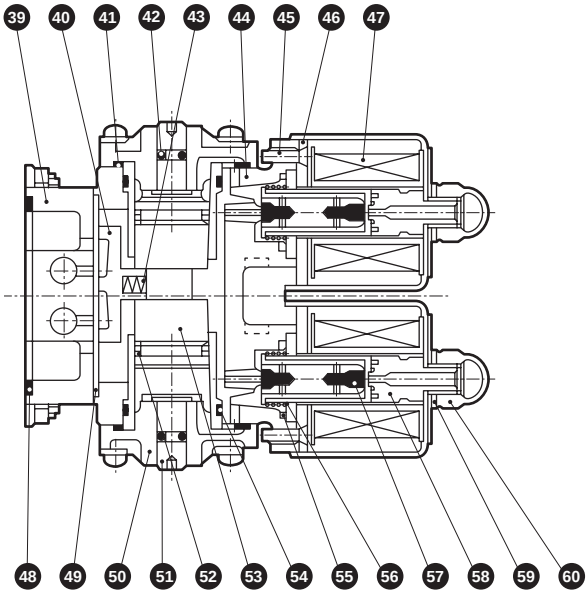

● COV$^{P}_{N}$2, COV$^{P}_{N}$2-N (single solenoid)

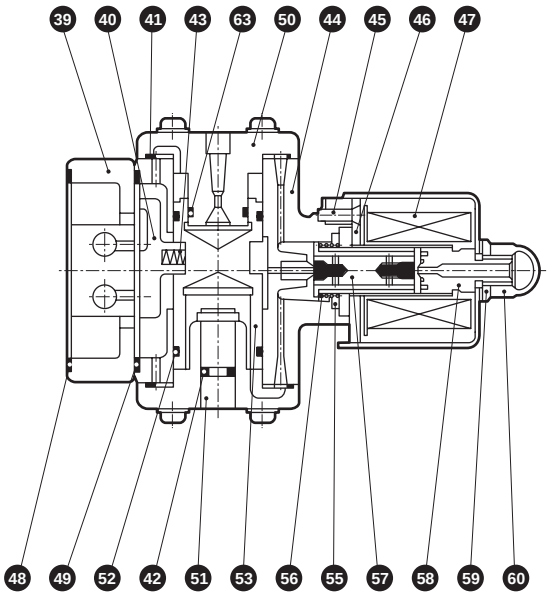

Parts list

No.	Part name	Material	Remarks	No.	Part name	Material	Remarks
1	Piston rod	Steel	Industrial chrome plating	33	Lock nut	Steel	Zinc chromate
2	Hexagon nut	Steel	Zinc chromate	34	U nut	Steel	Zinc chromate
3	Dust wiper	Nitrile rubber		35	Phillips pan head machine screw	Steel	Zinc chromate [no-lubrication only]
4	Rod packing	Nitrile rubber		36	Spring washer	Steel	Zinc chromate [no-lubrication only]
5	Bush	Oil impregnated bearing alloy		37	Muffler retainer plate	Steel	Zinc chromate [no-lubrication only]
6	Rod cover	Aluminum alloy die-casting	Paint	38	Element	Resin	[no-lubrication only]
7	Needle gasket	Nitrile rubber		39	Exhaust block	Aluminum alloy die-casting	Hard alumite (lubrication only)
8	Cushion needle	Copper alloy					Nickeling (no-lubrication only)
9	Needle nut	Copper alloy		40	Slide valve	Tetrafluoroethylene resin	
10	Cylinder gasket	Nitrile rubber		41	Cap gasket	Nitrile rubber	
11	Cushion packing	Nitrile rubber/steel		42	Rod gasket	Nitrile rubber	O-ring
12	Cylinder tube	Aluminum alloy	Hard alumite	43	Port spring	Stainless steel	
13	Switch holder	Stainless steel		44	Port body	Aluminum alloy die-casting	
14	Phillips pan head machine screw	Steel		45	Phillips flat head machine screw	Steel	Zinc chromate
15	Cylinder switch			46	Ring core	Steel	
16	Switch mounting base	Aluminum alloy		47	Coil assembly		Bobbin [CAV2], molded [COV2]
17	Set screw	Steel		48	Exhaust block gasket	Nitrile rubber	
18	Piston (R)	Aluminum alloy die-casting		49	Port body gasket	Nitrile rubber	
19	Magnet	Plastic		50	Cap	Aluminum alloy die-casting	
20	Piston gasket	Nitrile rubber		51	Valve rod	Aluminum alloy	
21	Piston (H)	Aluminum alloy die-casting		52	Spool packing	Nitrile rubber	
22	Wear ring	Polyacetal resin		53	Spool	Aluminum alloy	
23	Piston packing	Nitrile rubber		54	Sleeve gasket	Nitrile rubber	CAV*2 only
24	Head cover	Aluminum alloy die-casting	Paint	55	Core gasket	Nitrile rubber	
25	Tie rod	Steel	Zinc chromate	56	Plunger spring	Stainless steel	
26	Hexagon nut	Steel	Zinc chromate	57	Plunger assembly	Stainless steel, nitrile rubber	
27	Spring washer	Steel	Zinc chromate	58	Core assembly	Stainless steel, copper	
28	Washer	Steel	Zinc chromate [ø100 only]	59	Spring washer	Steel	
29	Pass-pipe	Aluminum alloy		60	Cap nut	Steel	
30	Pipe gasket	Nitrile rubber		61	Manual dial	Polyacetal resin	COV*2 only
31	Plug	Steel	Black finish	62	Manual gasket	Nitrile rubber	COV*2 only
32	Speed adjustment needle	Steel	Nickeling	63	Spool packing	Nitrile rubber	COV*2 only

*1: 7/8/9/11 are not used in the type without cushion.

Repair parts list of cylinder section

Tube Bore size (mm)	Kit No.	Repair parts No.
ø50	CAV2-50BK	3 4 7 10 11 22 23 30
ø75	CAV2-75BK	
ø100	CAV2-100BK	

Note: Common to the lubrication, no-lubrication, types with cushion and type without cushion.
7 and 11 are not used in the type without cushion.

Repair parts list of valve section

Valve	Kit No.	Repair parts No.
Double solenoid	CAV2-N-K	40 41 42 43 48 49 52 54 55 56 57
Single solenoid	COV2-N-K	40 41 42 43 48 49 52 55 56 57 63

Note: Common to the lubrication and no-lubrications.

Material of mounting bracket

Mounting	Material	Remarks
LB	Steel	Black finish
FA	Steel	Paint
CA	Cast iron	Paint
TC, TF	Cast iron	Paint

Note: All are assembled before shipment.

Dimensions (Double solenoid CAV2)

CAD

● Axial foot (LB) ø50

*1 : Dimensions in ( ) are for the type with cushion (B).
*2 : For the L dimension, round up below the decimal point.
*3 : Dimensions of the short overall length with cushion (-S and -NS) are the same as those of the type without cushion (N) in this figure.
*4 : For the dimensions of the accessories, refer to page 739.
*5 : Non-sag block (2-dashed line) will be added depending on the stroke. Refer to page 730.

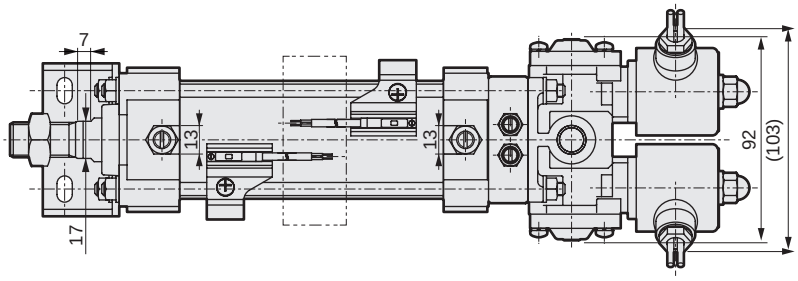

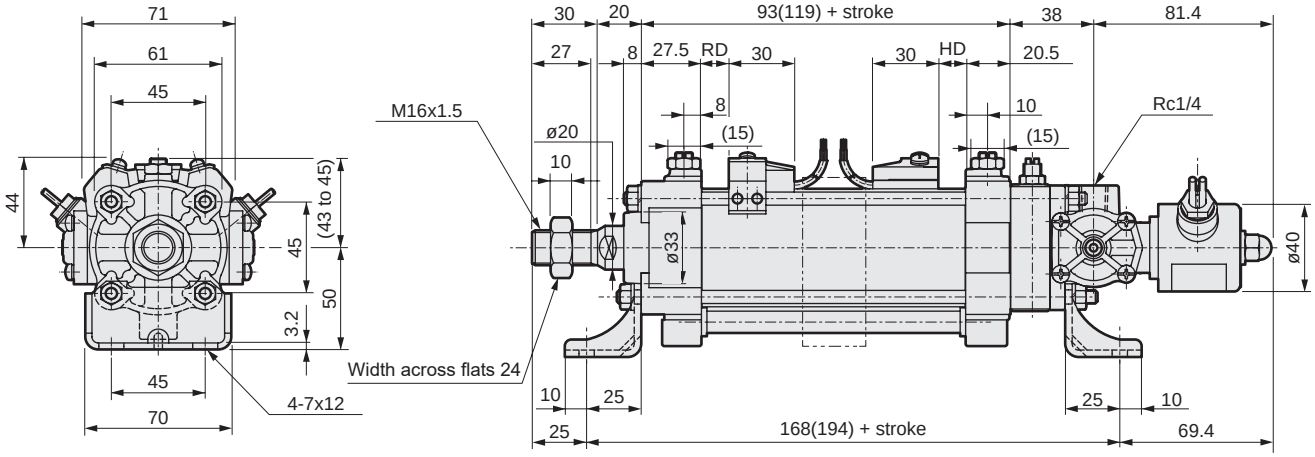

[With bellows]

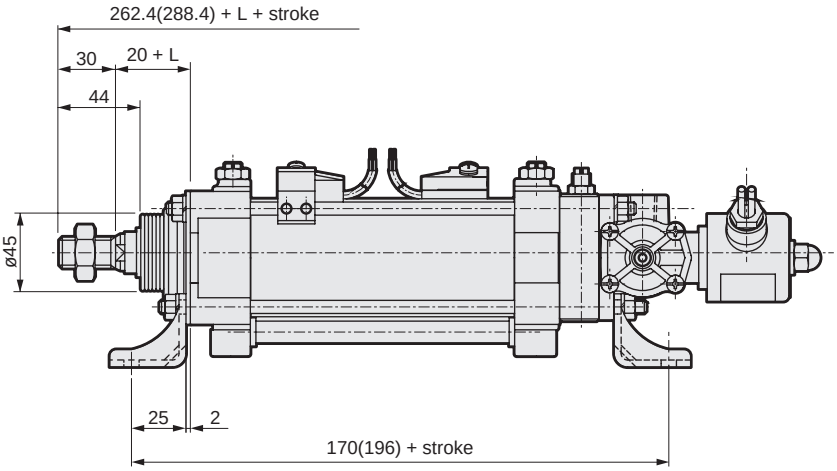

Code	With bellows							With switch							
	L							T0, T5 T2, T3		T2W, T3W		T1, T2Y, T3Y, T2J		T8	
Bore size (mm)	50 or less	Over 50 to 100	Over 100 to 150	Over 150 to 200	Over 200 to 250	Over 250 to 300	Over 300	RD	HD	RD	HD	RD	HD	RD	HD
ø50	17	24	37	47	57	67	(Stroke/5)	12.5(25.5)		15.5(28.5)		12.5(25.5)		7(20.5)	

Dimensions (Double solenoid CAV2)

CAD

● Axial foot (LB) ø75/ø100

*1 : Dimensions in ( ) are for the type with cushion (B).
*2 : For the L dimension, round up below the decimal point.
*3 : Dimensions of the short overall length with cushion (-S and -NS) are the same as those of the type without cushion (N) in this figure.
*4 : For the dimensions of the accessories, refer to page 739.
*5 : Non-sag block (2-dashed line) will be added depending on the stroke. Refer to page 730.

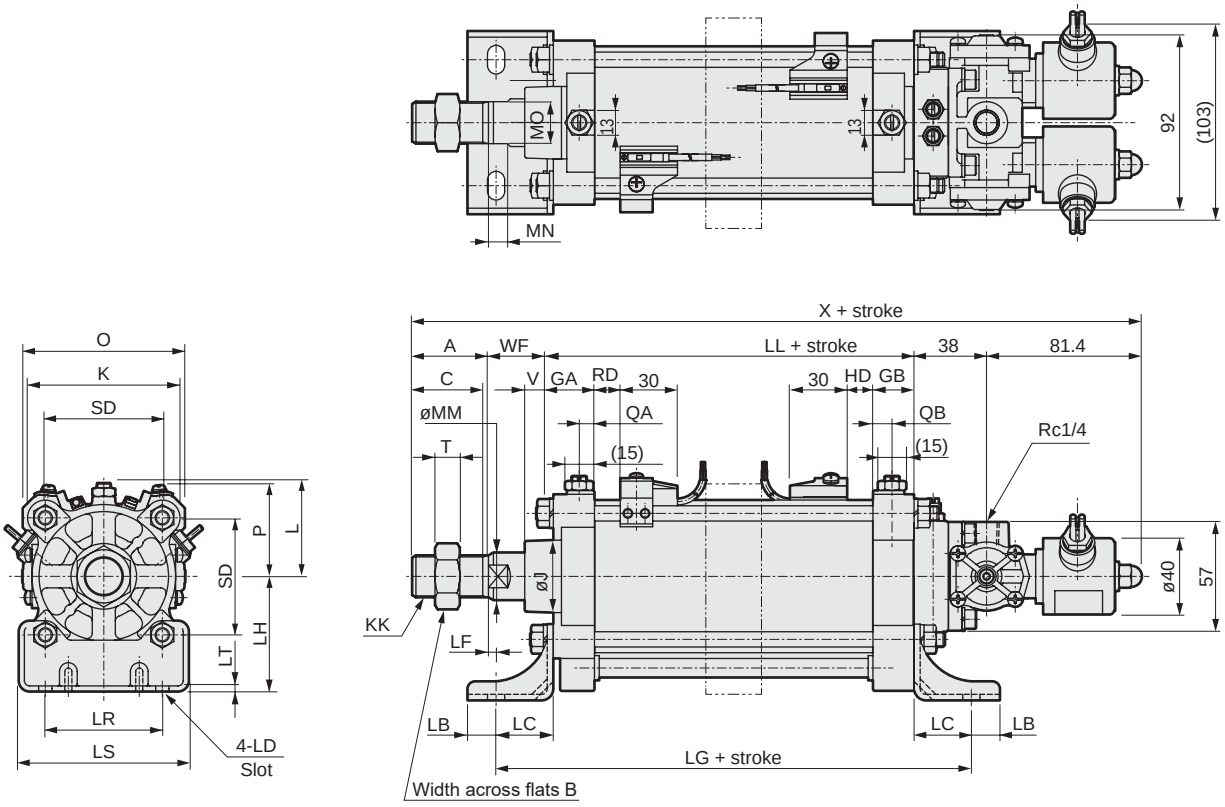

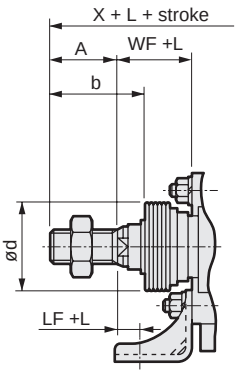

[With bellows]

Code / Bore size (mm)	Axial foot basic dimensions																				Mounting dimensions		
	A	B	C	GA	GB	J	K	KK	L	LL	MM	MN	MO	QA	QB	SD	T	V	WF	X	LB	LC	LD
ø 75	40	32	37	22	22	38	86	M22x1.5	52 to 54	91(139)	25	10	22	8	10	66	13	15	34	284.4(332.4)	15	30	9x15
ø100	40	32	37	24.5	24.5	38	109	M22x1.5	60.5 to 62.5	105(142)	25	10	22	10.7	10.7	86.3	13	15	35	299.4(336.4)	15	30	11x20

Code / Bore size (mm)	Mounting dimensions						With bellows									With switch							
	LF	LG	LH	LR	LS	LT	b	d	L							O	P	T0, T5 T2, T3		T2W, T3W		T1, T2Y, T3Y, T2J		T8	
									50 or less	Over 50 to 100	101 ≤ 150	151 ≤ 200	201 ≤ 250	251 ≤ 300	Over 300			RD	HD	RD	HD	RD	HD	RD	HD
ø 75	4	151(199)	65	66	96	3.2	55	50	7	14	27	37	47	57	(Stroke/5)	92	52	13.5(37.5)		16.5(40.5)		13.5(37.5)		8.5(32.5)	
ø100	5	165(202)	85	85	120	3.2	55	50	7	14	27	37	47	57	(Stroke/5)	118	64	17.5(36.0)		20.5(39.0)		17.5(36)		12.5(31)	

SCP*3
CMK2
CMA2
SCM
SCG
SCA2
SCS2
CKV2
CAV2/ COVP/N2
SSD2
SSG
SSD
CAT
MDC2
MVC
SMG
MSD/ MSDG
FC*
STK
SRL3
SRG3
SRM3
SRT3
MRL2
MRG2
SM-25
ShkAbs
FJ
FK
Spd Contr
Ending

Dimensions (Double solenoid CAV2)

CAD

● Rod side flange (FA) ø50

*1 : Dimensions in ( ) are for the type with cushion (B).
*2 : For the L dimension, round up below the decimal point.
*3 : Dimensions of the short overall length with cushion (-S and -NS) are the same as those of the type without cushion (N) in this figure.
*4 : In the type with bellows, the bellows installation surface and the hexagon nut (M6) will protrude from the flange installation surface. Therefore, provide depth of ø77 or more and clearance of 11 or more.
*5 : For the dimensions of the accessories, refer to page 739.
*6 : Non-sag block (2-dashed line) will be added depending on the stroke. Refer to page 730.

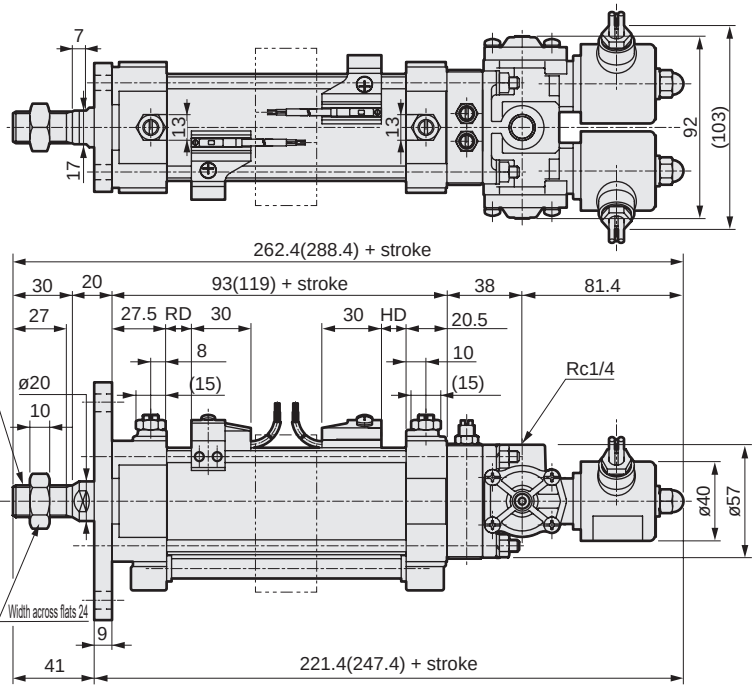

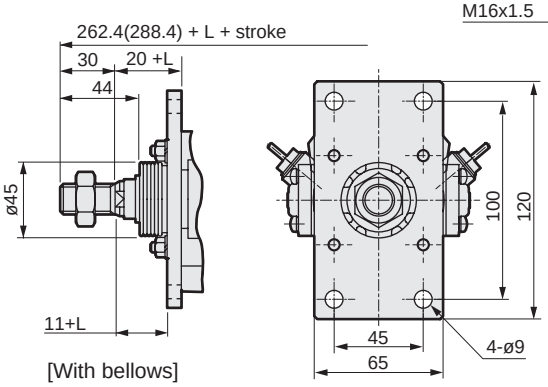

[With bellows]

Code	With bellows							With switch							
	L							T0, T5 T2, T3		T2W, T3W		T1, T2Y, T3Y, T2J		T8	
Bore size (mm)	50 or less	Over 50 to 100	Over 100 to 150	Over 150 to 200	Over 200 to 250	Over 250 to 300	Over 300	RD	HD	RD	HD	RD	HD	RD	HD
ø50	17	24	37	47	57	67	(Stroke/5)	12.5(25.5)		15.5(28.5)		15.5(25.5)		7(20.5)	

● Rod side flange (FA) ø75/ø100

*1 : Dimensions in ( ) are for the type with cushion (B).
*2 : For the L dimension, round up below the decimal point.
*3 : Dimensions of the short overall length with cushion (-S and -NS) are the same as those of the type without cushion (N) in this figure.
*4 : For the dimensions of the accessories, refer to page 739.
*5 : Non-sag block (2-dashed line) will be added depending on the stroke. Refer to page 730.

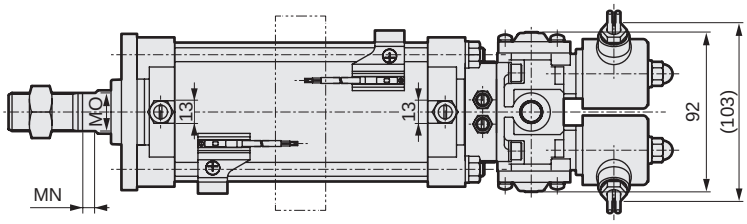

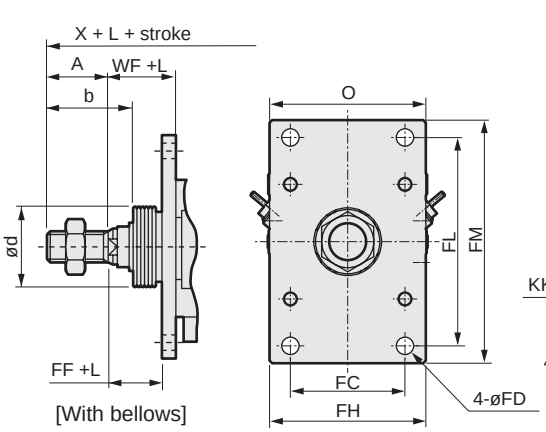

[With bellows]

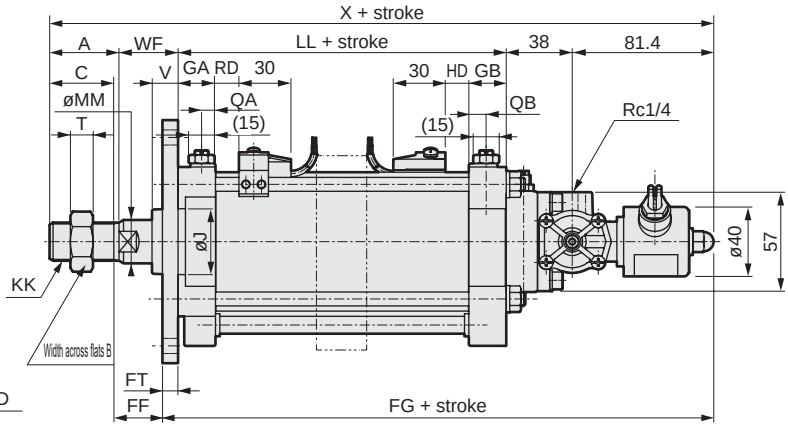

Code	Rod side flange basic dimensions																	Mounting dimensions		
Bore size (mm)	A	B	C	GA	GB	J	KK	LL	MM	MN	MO	QA	QB	T	V	WF	X	FC	FD	FF
ø 75	40	32	37	22	22	38	M22x1.5	91(139)	25	10	22	8	10	13	15	34	284.4(332.4)	66	10	25
ø100	40	32	37	24.5	24.5	38	M22x1.5	105(142)	25	10	22	10.7	10.7	13	15	35	299.4(336.4)	85	12	23

Code	Mounting dimensions					With bellows									With switch							
								L														
Bore size (mm)	FG	FH	FL	FM	FT	b	d	50 or less	Over 50 to 100	101 ≤ 150	151 ≤ 200	201 ≤ 250	251 ≤ 300	Over 300	O	P	T0, T5 T2, T3		T2W, T3W		T1, T2Y, T3Y, T2J		T8	
																	RD	HD	RD	HD	RD	HD	RD	HD
ø 75	219.4(267.4)	90	120	140	9	55	50	7	14	27	37	47	57	(Stroke/5)	92	52	13.5(37.5)		16.5(40.5)		13.5(37.5)		8.5(32.5)	
ø100	236.4(273.4)	120	150	180	12	55	50	7	14	27	37	47	57	(Stroke/5)	118	64	17.5(36.0)		20.5(39.0)		17.5(36)		12.5(31)	

Dimensions (Double solenoid CAV2)

CAD

● Clevis (CA) ø50

*1 : Dimensions in ( ) are for the type with cushion (B).
*2 : For the L dimension, round up below the decimal point.
*3 : For the oscillating range when combined with clevis bracket (B2), refer to page 740.
*4 : Dimensions of the short overall length with cushion (-S and -NS) are the same as those of the type without cushion (N) in this figure.
*5 : For the dimensions of the accessories, refer to page 739.
*6 : Non-sag block (2-dashed line) will be added depending on the stroke. Refer to page 730 in the catalog.

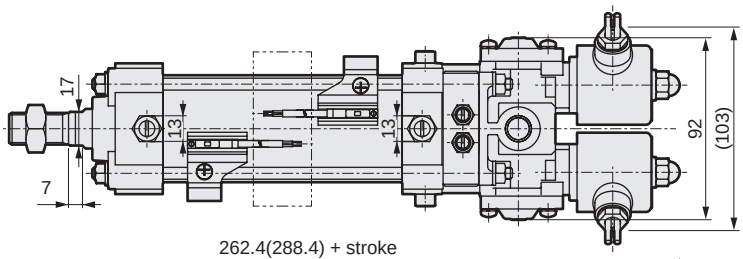

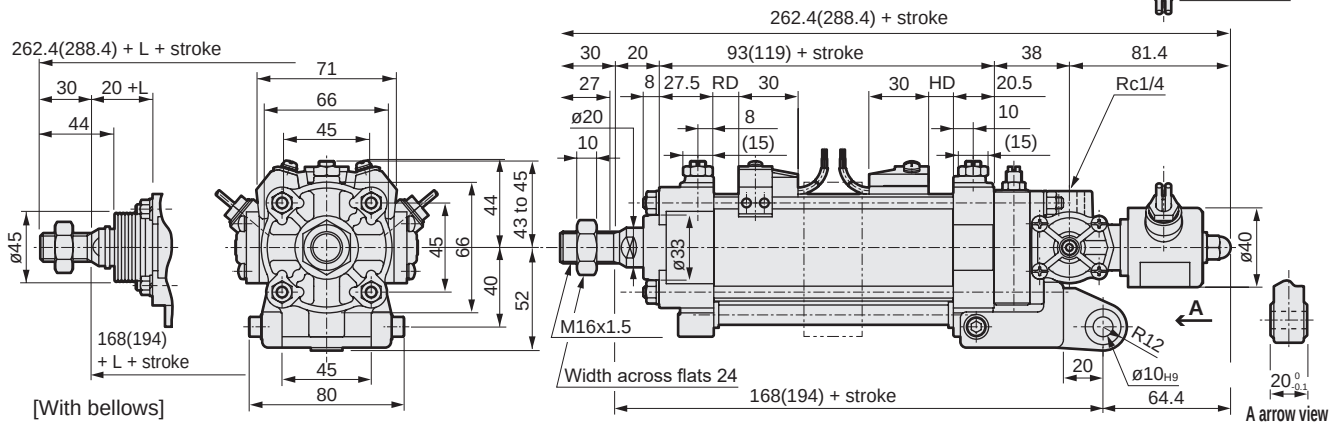

Code	With bellows							With switch							
Bore size (mm)	L							T0, T5 T2, T3		T2W, T3W		T1, T2Y, T3Y, T2J		T8	
	50 or less	Over 50 to 100	Over 100 to 150	Over 150 to 200	Over 200 to 250	Over 250 to 300	Over 300	RD	HD	RD	HD	RD	HD	RD	HD
ø50	17	24	37	47	57	67	(Stroke/5)	12.5(25.5)		15.5(28.5)		12.5(25.5)		7(20.5)	

● Eye bracket (CA) ø75/ø100

*1 : Dimensions in ( ) are for the type with cushion (B).
*2 : For the L dimension, round up below the decimal point.
*3 : For the oscillating range when combined with clevis bracket (B2), refer to page 740.
*4 : Note that the valve cannot be operated manually. Thank you in advance for your understanding.
*5 : Dimensions of the short overall length with cushion (-S and -NS) are the same as those of the type without cushion (N) in this figure.
*6 : For the dimensions of the accessories, refer to page 739.
*7 : Non-sag block (2-dashed line) will be added depending on the stroke. Refer to page 730 in the catalog.

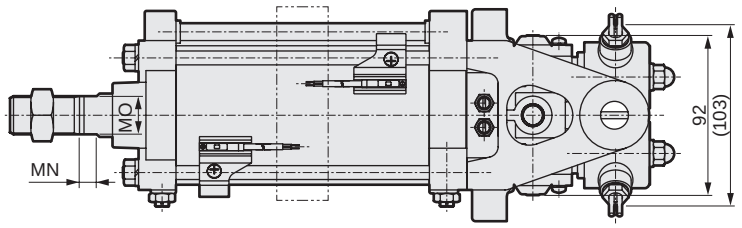

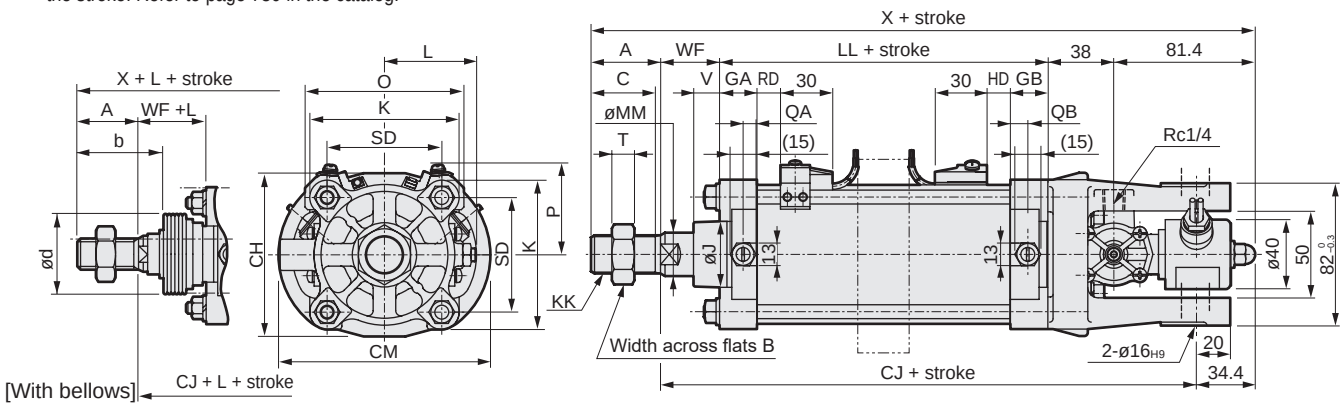

Code	Eye bracket basic dimensions																				Mounting dimensions	
Bore size (mm)	A	B	C	GA	GB	J	K	KK	L	LL	MM	MN	MO	QA	QB	SD	T	V	WF	X	CH	CJ
ø 75	40	32	37	22	22	38	86	M22x1.5	52 to 54	91(139)	25	10	22	8	10	66	13	15	34	284.4(332.4)	94	210(258)
ø100	40	32	37	24.5	24.5	38	109	M22x1.5	60.5 to 62.5	105(142)	25	10	22	10.7	10.7	86.3	13	15	35	299.4(336.4)	109	225(262)

Code		With bellows									With switch							
Bore size (mm)	CM	b	d	L							O	P	T0, T5 T2, T3		T2W, T3W		T1, T2Y, T3Y, T2J		T8	
				50 or less	Over 50 to 100	Over 100 to 150	Over 150 to 200	Over 200 to 250	Over 250 to 300	Over 300			RD	HD	RD	HD	RD	HD	RD	HD
ø 75	122	55	50	7	14	27	37	47	57	(Stroke/5)	92	52	13.5(37.5)		16.5(40.5)		13.5(37.5)		8.5(32.5)	
ø100	124	55	50	7	14	27	37	47	57	(Stroke/5)	118	64	17.5(36.0)		20.5(39.0)		17.5(36)		12.5(31)	

SCP*3
CMK2
CMA2
SCM
SCG
SCA2
SCS2
CKV2
CAV2/ COVP/N2
SSD2
SSG
SSD
CAT
MDC2
MVC
SMG
MSD/ MSDG
FC*
STK
SRL3
SRG3
SRM3
SRT3
MRL2
MRG2
SM-25
ShkAbs
FJ
FK
Spd Contr
Ending

Dimensions (Double solenoid CAV2)

CAD

● Intermediate trunnion (shaft) (TC) ø50

*1 : Dimensions in ( ) are for the type with cushion (B).
*2 : For the L dimension, round up below the decimal point.
*3 : Dimensions of the short overall length with cushion (-S and -NS) are the same as those of the type without cushion (N) in this figure.
*4 : For the dimensions of the accessories, refer to page 739.

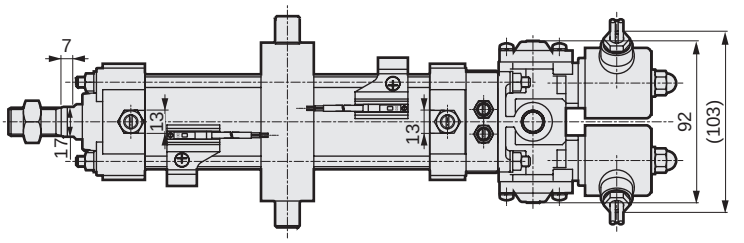

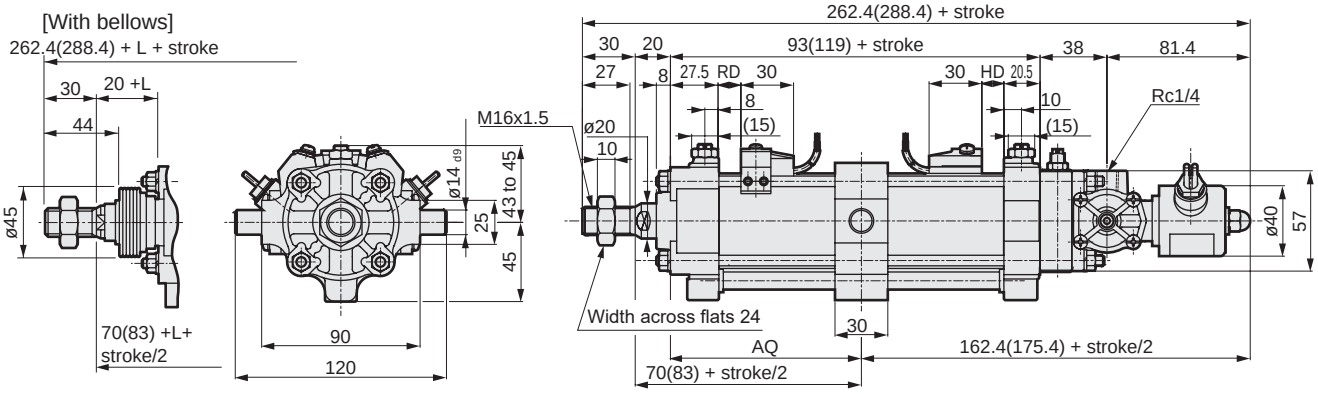

Code / Bore size (mm)	Mounting dimensions AQ	With bellows L: 50 or less	Over 50 to 100	Over 100 to 150	Over 150 to 200	Over 200 to 250	Over 250 to 300	Over 300	With switch T0, T5 T2, T3 RD	T0, T5 T2, T3 HD	T2W, T3W RD	T2W, T3W HD	T1, T2Y, T3Y, T2J RD	T1, T2Y, T3Y, T2J HD	T8 RD	T8 HD
ø50	50 (63) + stroke/2	17	24	37	47	57	67	(Stroke/5)	12.5(25.5)		15.5(28.5)		12.5(25.5)		7(20.5)	

● Intermediate trunnion (shaft) (TC) ø75/ø100

*1 : Dimensions in ( ) are for the type with cushion (B).
*2 : For the L dimension, round up below the decimal point.
*3 : Dimensions of the short overall length with cushion (-S and -NS) are the same as those of the type without cushion (N) in this figure.
*4 : For the dimensions of the accessories, refer to page 739.

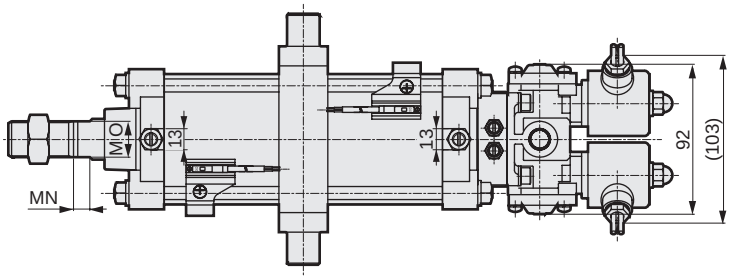

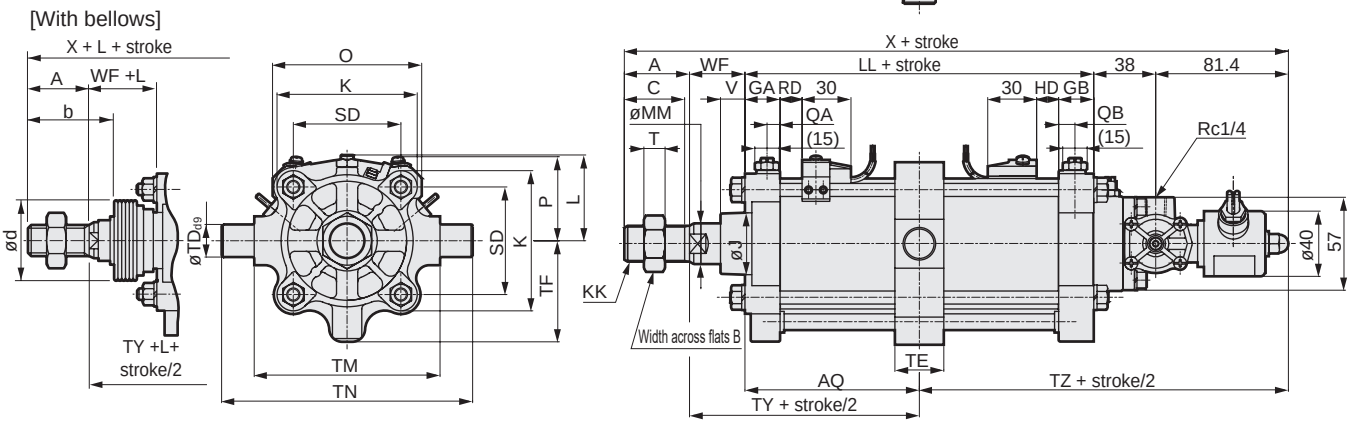

Code / Bore size (mm)	Intermediate trunnion (shaft) ø75/ø100 basic dimensions: A	B	C	GA	GB	J	K	KK	L	LL	MM	MN	MO	QA	QB	SD	T	V	WF	X	Mounting dimensions: AQ	TD	TE	TF
ø 75	40	32	37	22	22	38	86	M22x1.5	52 to 54	91(139)	25	10	22	8	10	66	13	15	34	284.4(332.4)	45.5(69.5)+ Stroke/2	20	30	62
ø100	40	32	37	24.5	24.5	38	109	M22x1.5	60.5 to 62.5	105(142)	25	10	22	10.7	10.7	86.3	13	15	35	299.4(336.4)	52.5(71)+ Stroke/2	35	50	78

Code / Bore size (mm)	TM	TN	TZ	TY	With bellows: b	d	L: 50 or less	Over 50 to 100	Over 100 to 150	Over 150 to 200	Over 200 to 250	Over 250 to 300	Over 300	With switch: O	P	T0, T5 T2, T3 RD	T0, T5 T2, T3 HD	T2W, T3W RD	T2W, T3W HD	T1, T2Y, T3Y, T2J RD	T1, T2Y, T3Y, T2J HD	T8 RD	T8 HD
ø 75	114	154	164.9(188.9)	79.5(103.5)	55	50	7	14	27	37	47	57	(Stroke/5)	92	52	13.5(37.5)		16.5(40.5)		13.5(37.5)		8.5(32.5)	
ø100	135	205	171.9(190.4)	87.5(106)	55	50	7	14	27	37	47	57	(Stroke/5)	118	64	17.5(36.0)		20.5(39.0)		17.5(36)		12.5(31)	

Dimensions (Double solenoid CAV2)

CAD

● Intermediate trunnion (supporting hole) (TF) ø50

*1 : Dimensions in ( ) are for the type with cushion (B).
*2 : For the L dimension, round up below the decimal point.
*3 : Dimensions of the short overall length with cushion (-S and -NS) are the same as those of the type without cushion (N) in this figure.
*4 : For the dimensions of the accessories, refer to page 739.

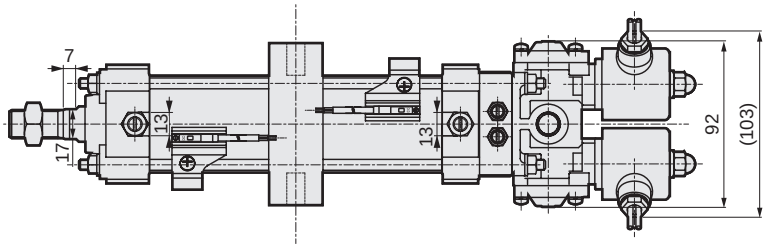

[With bellows]

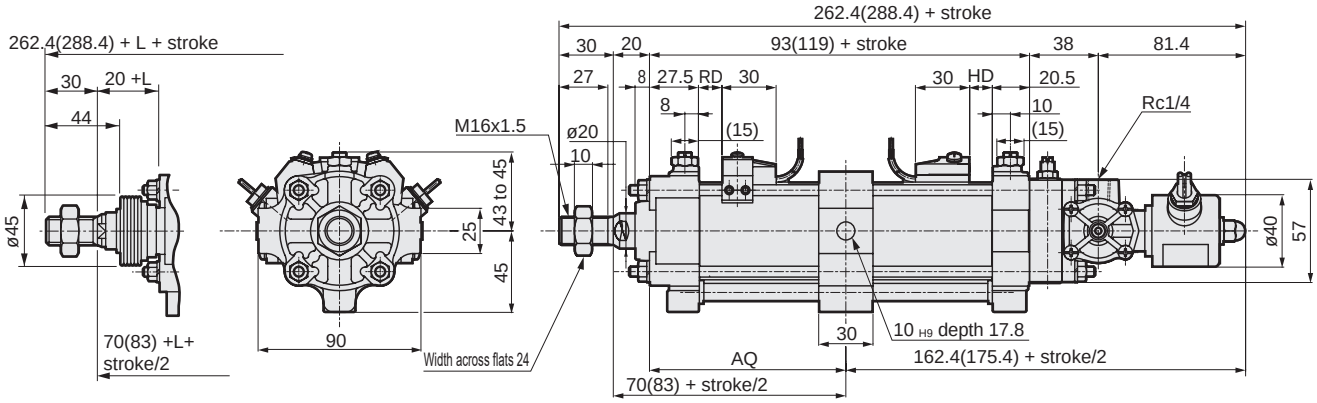

Code / Bore size (mm)	Mounting dimensions AQ	With bellows L: 50 or less	Over 50 to 100	Over 100 to 150	Over 150 to 200	Over 200 to 250	Over 250 to 300	Over 300	With switch T0, T5 T2, T3 RD	T0, T5 T2, T3 HD	T2W, T3W RD	T2W, T3W HD	T1, T2Y, T3Y, T2J RD	T1, T2Y, T3Y, T2J HD	T8 RD	T8 HD
ø50	50 (63) + stroke/2	17	24	37	47	57	67	(Stroke/5)	12.5(25.5)		15.5(28.5)		12.5(25.5)		7(20.5)	

● Intermediate trunnion (supporting hole) (TF) ø75/ø100

*1 : Dimensions in ( ) are for the type with cushion (B).
*2 : For the L dimension, round up below the decimal point.
*3 : Dimensions of the short overall length with cushion (-S and -NS) are the same as those of the type without cushion (N) in this figure.
*4 : For the dimensions of the accessories, refer to page 739.

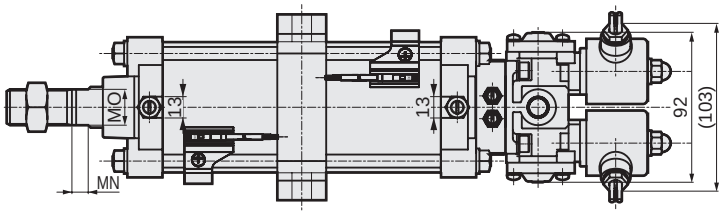

[With bellows]

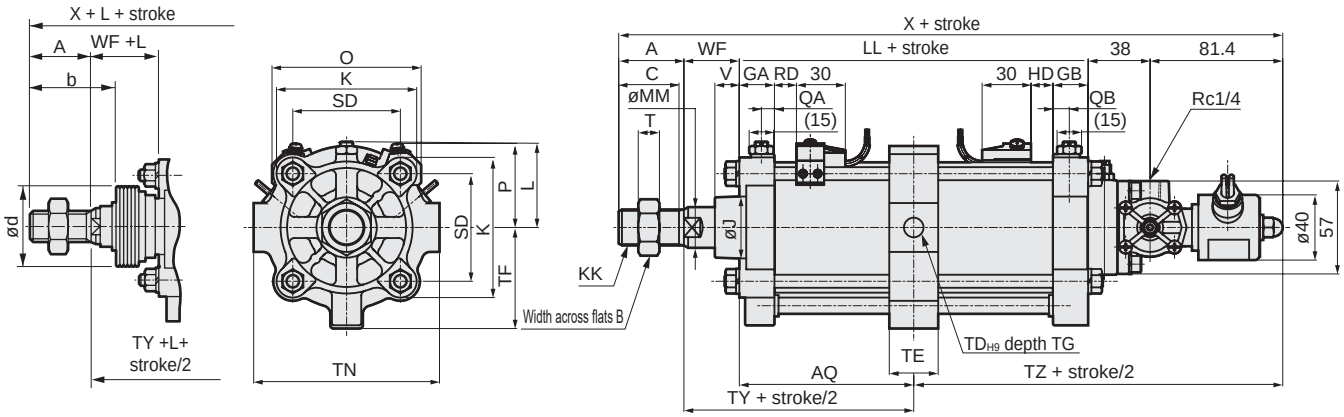

Code / Bore size (mm)	Intermediate trunnion (supporting hole type) ø75/ø100 basic dimensions A	B	C	GA	GB	J	K	KK	L	LL	MM	MN	MO	QA	QB	SD	T	V	WF	X	Mounting dimensions AQ	TD	TE	TF
ø 75	40	32	37	22	22	38	86	M22x1.5	52 to 54	91(139)	25	10	22	8	10	66	13	15	34	284.4(332.4)	45.5(69.5)+ Stroke/2	12	30	62
ø100	40	32	37	24.5	24.5	38	109	M22x1.5	60.5 to 62.5	105(142)	25	10	22	10.7	10.7	86.3	13	15	35	299.4(336.4)	52.5(71)+ Stroke/2	16	40	78

Code / Bore size (mm)	Mounting dimensions TG	TN	TZ	TY	With bellows b	d	L: 50 or less	Over 50 to 100	Over 100 to 150	Over 150 to 200	Over 200 to 250	Over 250 to 300	Over 300	With switch O	P	T0, T5 T2, T3 RD	T0, T5 T2, T3 HD	T2W, T3W RD	T2W, T3W HD	T1, T2Y, T3Y, T2J RD	T1, T2Y, T3Y, T2J HD	T8 RD	T8 HD
ø 75	16.8	114	164.9(188.9)	79.5(103.5)	55	50	7	14	27	37	47	57	(Stroke/5)	92	52	13.5(37.5)		16.5(40.5)		13.5(37.5)		8.5(32.5)	
ø100	18.6	144	171.9(190.4)	87.5(106)	55	50	7	14	27	37	47	57	(Stroke/5)	118	64	17.5(36.0)		20.5(39.0)		17.5(36)		12.5(31)	

Dimensions (Single solenoid COV$^{P}_{N}$2)

CAD

● Axial foot (LB) ø50

*1 : Dimensions in ( ) are for the type with cushion (B).
*2 : For the L dimension, round up below the decimal point.
*3 : Dimensions of the short overall length with cushion (-S and -NS) are the same as those of the type without cushion (N) in this figure.
*4 : For the dimensions of the accessories, refer to page 739.
*5 : Non-sag block (2-dashed line) will be added depending on the stroke. Refer to page 730.

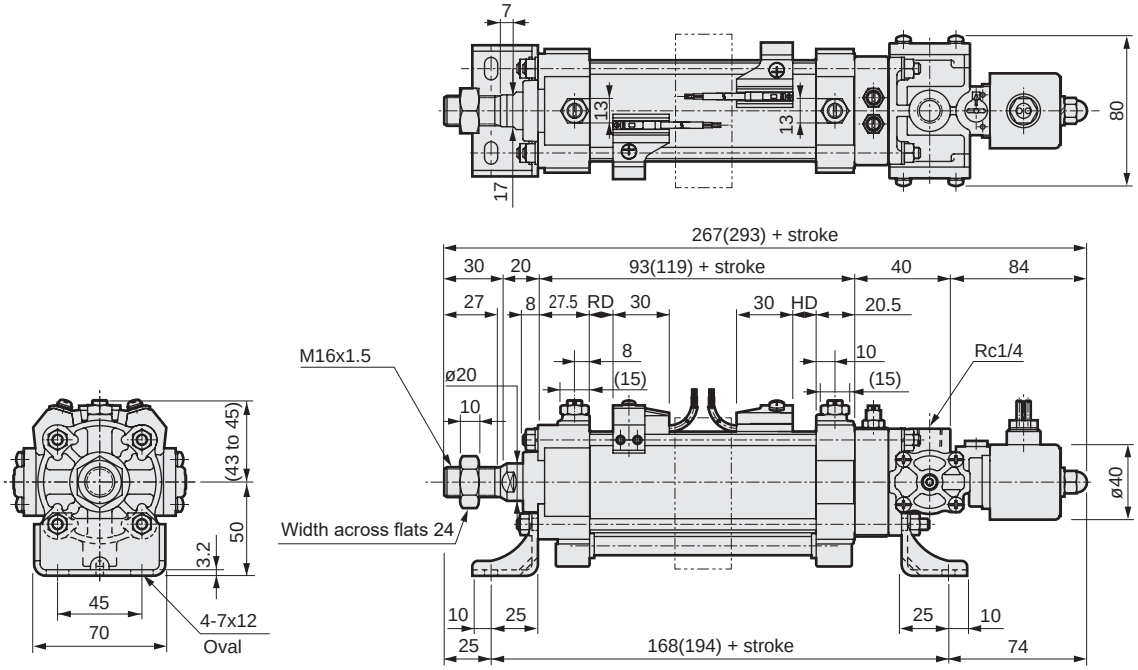

[With bellows]

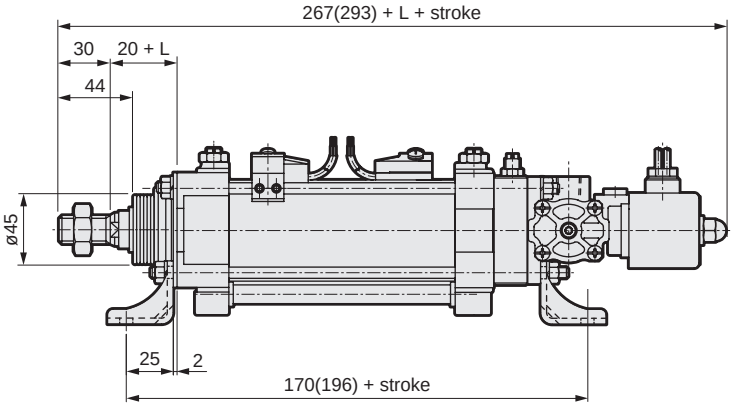

Code	With bellows							With switch							
	L							T0, T5 T2, T3		T2W, T3W		T1, T2Y, T3Y, T2J		T8	
Bore size (mm)	50 or less	Over 50 to 100	Over 100 to 150	Over 150 to 200	Over 200 to 250	Over 250 to 300	Over 300	RD	HD	RD	HD	RD	HD	RD	HD
ø50	17	24	37	47	57	67	(Stroke/5)	12.5(25.5)		15.5(28.5)		12.5(25.5)		7(20.5)	

Dimensions (Single solenoid COV$^{P}_{N}$2)

CAD

● Axial foot (LB) ø75/ø100

*1 : Dimensions in ( ) are for the type with cushion (B).
*2 : For the L dimension, round up below the decimal point.
*3 : Dimensions of the short overall length with cushion (-S and -NS) are the same as those of the type without cushion (N) in this figure.
*4 : For the dimensions of the accessories, refer to page 739.
*5 : Non-sag block (2-dashed line) will be added depending on the stroke. Refer to page 730.

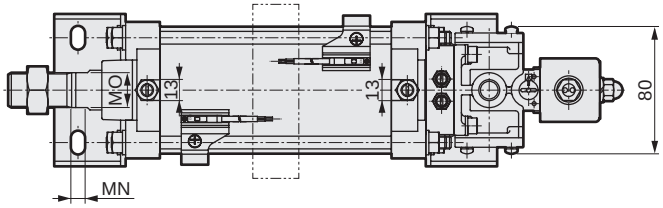

[With bellows]

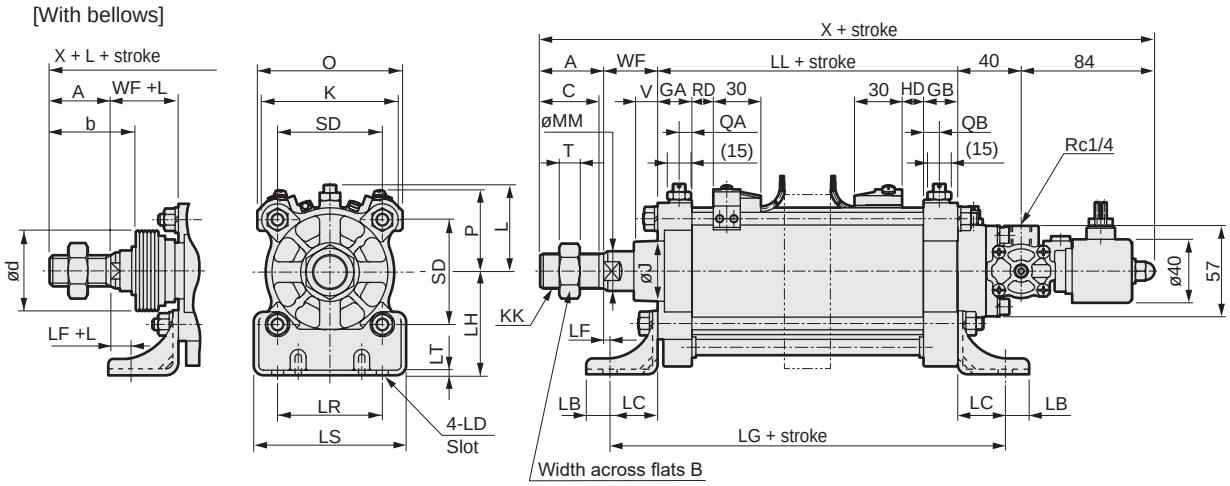

Code	Axial foot ø75/ø100 basic dimensions																				Mounting dimensions	
Bore size (mm)	A	B	C	GA	GB	J	K	KK	L	LL	MM	MN	MO	QA	QB	SD	T	V	WF	X	LB	LC
ø 75	40	32	37	22	22	38	86	M22x1.5	52 to 54	91(139)	25	10	22	8	10	66	13	15	34	289(337)	15	30
ø100	40	32	37	24.5	24.5	38	109	M22x1.5	60.5 to 62.5	105(142)	25	10	22	10.7	10.7	86.3	13	15	35	304(341)	15	30

Code	Mounting dimensions							With bellows									With switch							
Bore size (mm)	LD	LF	LG	LH	LR	LS	LT	b	d	L							O	P	T0, T5 T2, T3		T2W, T3W		T1, T2Y, T3Y, T2J		T8	
										50 or less	51 ≤ 100	101 ≤ 150	151 ≤ 200	201 ≤ 250	251 ≤ 300	Over 300			RD	HD	RD	HD	RD	HD	RD	HD
ø 75	9x15	4	151(199)	65	66	96	3.2	55	50	7	14	27	37	47	57	(Stroke/5)	92	52	13.5(37.5)		16.5(40.5)		13.5(37.5)		8.5(32.5)	
ø100	11x20	5	165(202)	85	85	120	3.2	55	50	7	14	27	37	47	57	(Stroke/5)	118	64	17.5(36.0)		20.5(39.0)		17.5(36)		12.5(31)	

SCP*3
CMK2
CMA2
SCM
SCG
SCA2
SCS2
CKV2
CAV2/ COVP/N2
SSD2
SSG
SSD
CAT
MDC2
MVC
SMG
MSD/ MSDG
FC*
STK
SRL3
SRG3
SRM3
SRT3
MRL2
MRG2
SM-25
ShkAbs
FJ
FK
Spd Contr
Ending

Dimensions (Single solenoid COV$^{P}_{N}$2)

CAD

● Rod side flange (FA) ø50

*1 : Dimensions in ( ) are for the type with cushion (B).
*2 : For the L dimension, round up below the decimal point.
*3 : Dimensions of the short overall length with cushion (-S and -NS) are the same as those of the type without cushion (N) in this figure.
*4 : In the type with bellows, the bellows installation surface and the hexagon nut (M6) will protrude from the flange installation surface. Therefore, provide depth of ø77 or more and clearance of 11 or more.
*5 : For the dimensions of the accessories, refer to page 739.
*6 : Non-sag block (2-dashed line) will be added depending on the stroke. Refer to page 730.

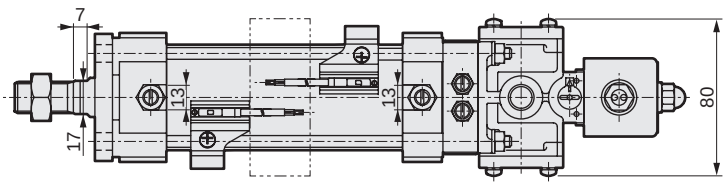

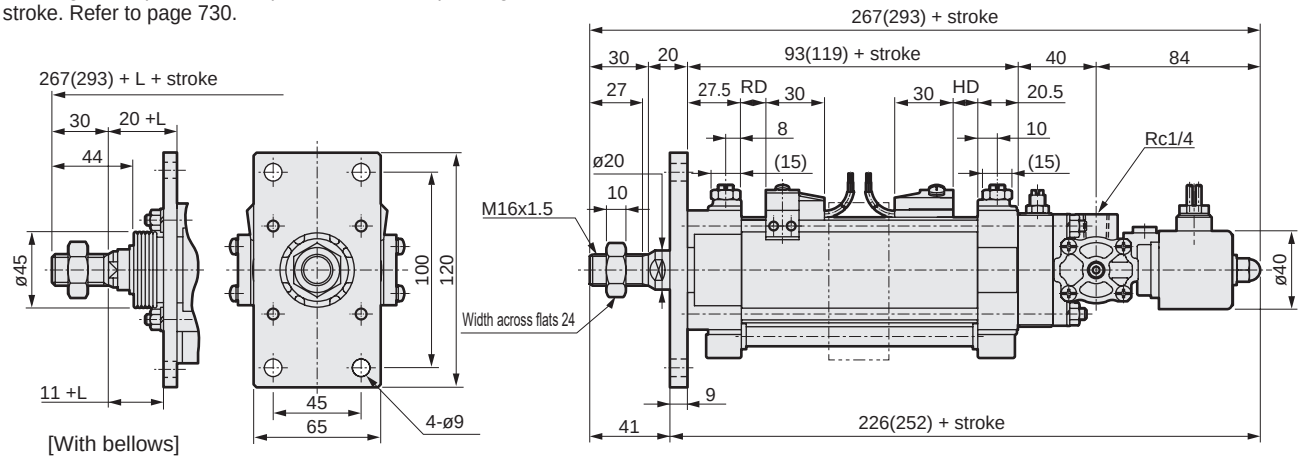

Code	With bellows							With switch							
	L							T0, T5 T2, T3		T2W, T3W		T1, T2Y, T3Y, T2J		T8	
Bore size (mm)	50 or less	Over 50 to 100	Over 100 to 150	Over 150 to 200	Over 200 to 250	Over 250 to 300	Over 300	RD	HD	RD	HD	RD	HD	RD	HD
ø50	17	24	37	47	57	67	(Stroke/5)	12.5(25.5)		15.5(28.5)		12.5(25.5)		7(20.5)	

● Rod side flange (FA) ø75/ø100

*1 : Dimensions in ( ) are for the type with cushion (B).
*2 : For the L dimension, round up below the decimal point.
*3 : Dimensions of the short overall length with cushion (-S and -NS) are the same as those of the type without cushion (N) in this figure.
*4 : For the dimensions of the accessories, refer to page 739.
*5 : Non-sag block (2-dashed line) will be added depending on the stroke. Refer to page 730.

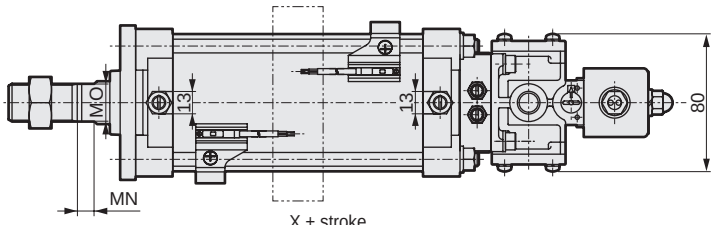

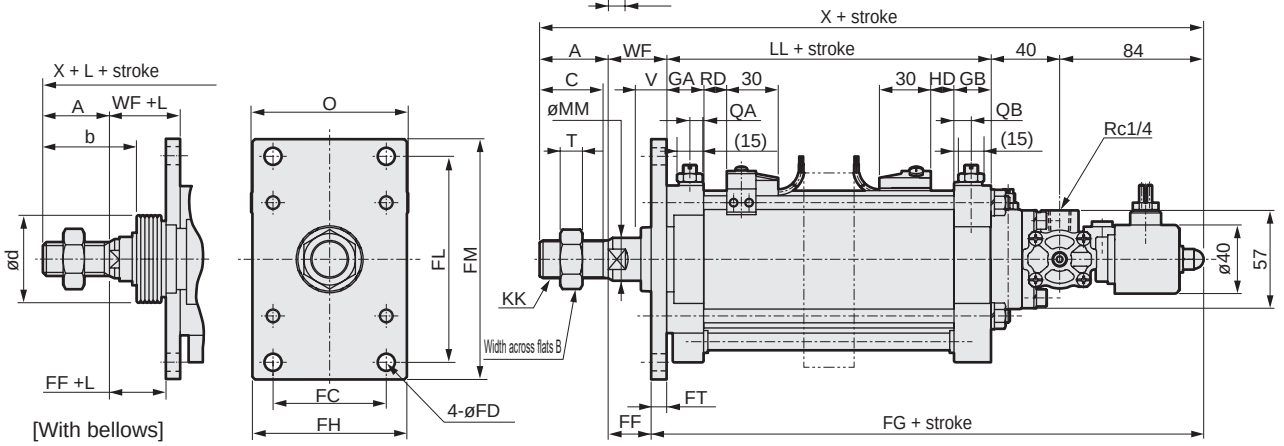

Code	Rod side flange ø75/ø100 basic dimensions																	Mounting dimensions			
Bore size (mm)	A	B	C	GA	GB	J	KK	LL	MM	MN	MO	QA	QB	T	V	WF	X	FC	FD	FF	FG
ø 75	40	32	37	22	22	38	M22x1.5	91(139)	25	10	22	8	10	13	15	34	289(337)	66	10	25	224(272)
ø100	40	32	37	24.5	24.5	38	M22x1.5	105(142)	25	10	22	10.7	10.7	13	15	35	304(341)	85	12	23	241(278)

Code					With bellows									With switch							
							L									T0, T5 T2, T3		T2W, T3W		T1, T2Y, T3Y, T2J		T8	
Bore size (mm)	FH	FL	FM	FT	b	d	50 or less	Over 50 to 100	Over 100 to 150	Over 150 to 200	Over 200 to 250	Over 250 to 300	Over 300	O	P	RD	HD	RD	HD	RD	HD	RD	HD
ø 75	90	120	140	9	55	50	7	14	27	37	47	57	(Stroke/5)	92	52	13.5(37.5)		16.5(40.5)		13.5(37.5)		8.5(32.5)	
ø100	120	150	180	12	55	50	7	14	27	37	47	57	(Stroke/5)	118	64	17.5(36.0)		20.5(39.0)		17.5(36)		12.5(31)	

Dimensions (Single solenoid COV$^{P}_{N}$2)

CAD

● Clevis (CA) ø50

*1 : Dimensions in ( ) are for the type with cushion (B).
*2 : For the L dimension, round up below the decimal point.
*3 : For the oscillating range when combined with clevis bracket (B2), refer to page 740.
*4 : Dimensions of the short overall length with cushion (-S and -NS) are the same as those of the type without cushion (N) in this figure.
*5 : For the dimensions of the accessories, refer to page 739.
*6 : Non-sag block (2-dashed line) will be added depending on the stroke. Refer to page 730.

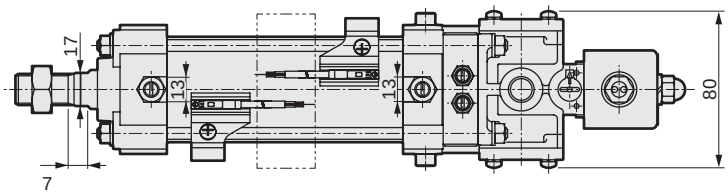

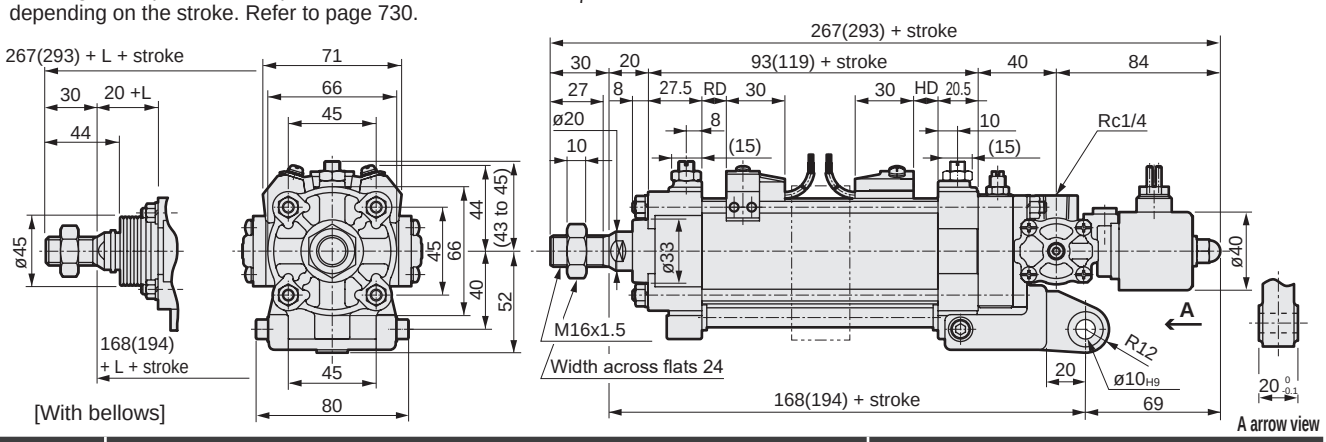

Code / Bore size (mm)	With bellows							With switch							
	L							T0, T5 T2, T3		T2W, T3W		T1, T2Y, T3Y, T2J		T8	
	50 or less	Over 50 to 100	Over 100 to 150	Over 150 to 200	Over 200 to 250	Over 250 to 300	Over 300	RD	HD	RD	HD	RD	HD	RD	HD
ø50	17	24	37	47	57	67	(Stroke/5)	12.5(25.5)		15.5(28.5)		12.5(25.5)		7(20.5)	

● Eye bracket (CA) ø75/ø100

*1 : Dimensions in ( ) are for the type with cushion (B).
*2 : For the L dimension, round up below the decimal point.
*3 : For the oscillating range when combined with clevis bracket (B2), refer to page 740.
*4 : Note that the valve cannot be operated manually. Thank you in advance for your understanding.
*5 : Dimensions of the short overall length with cushion (-S and -NS) are the same as those of the type without cushion (N) in this figure.
*6 : For the dimensions of the accessories, refer to page 739.
*7 : Non-sag block (2-dashed line) will be added depending on the stroke. Refer to page 730.

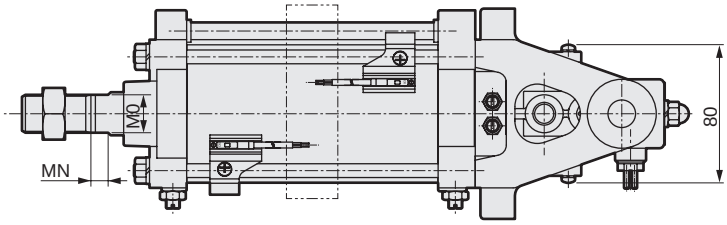

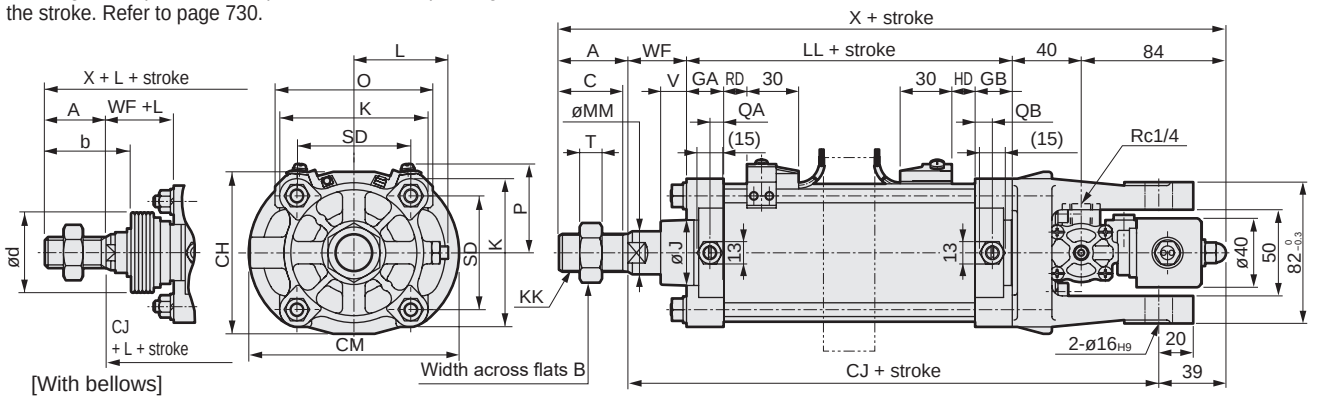

Code / Bore size (mm)	Eye bracket ø75/ø100 basic dimensions																				Mounting dimensions		
	A	B	C	GA	GB	J	K	KK	L	LL	MM	MN	MO	QA	QB	SD	T	V	WF	X	CH	CJ	CM
ø 75	40	32	37	22	22	38	86	M22x1.5	52 to 54	91(139)	25	10	22	8	10	66	13	15	34	289(337)	94	210(258)	122
ø100	40	32	37	24.5	24.5	38	109	M22x1.5	60.5 to 62.5	105(142)	25	10	22	10.7	10.7	86.3	13	15	35	304(341)	109	225(262)	124

Code / Bore size (mm)	With bellows									With switch							
	b	d	L							O	P	T0, T5 T2, T3		T2W, T3W		T1, T2Y, T3Y, T2J		T8	
			50 or less	Over 50 to 100	Over 100 to 150	Over 150 to 200	Over 200 to 250	Over 250 to 300	Over 300			RD	HD	RD	HD	RD	HD	RD	HD
ø 75	55	50	7	14	27	37	47	57	(Stroke/5)	92	52	13.5(37.5)		16.5(40.5)		13.5(37.5)		8.5(32.5)	
ø100	55	50	7	14	27	37	47	57	(Stroke/5)	118	64	17.5(36.0)		20.5(39.0)		17.5(36)		12.5(31)	

Dimensions (Single solenoid COV$^{P}_{N}$2)

CAD

● Intermediate trunnion (shaft) (TC) ø50

*1 : Dimensions in ( ) are for the type with cushion (B).
*2 : For the L dimension, round up below the decimal point.
*3 : Dimensions of the short overall length with cushion (-S and -NS) are the same as those of the type without cushion (N) in this figure.
*4 : For the dimensions of the accessories, refer to page 739.

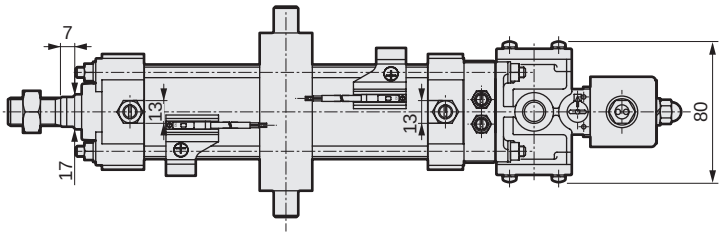

[With bellows]

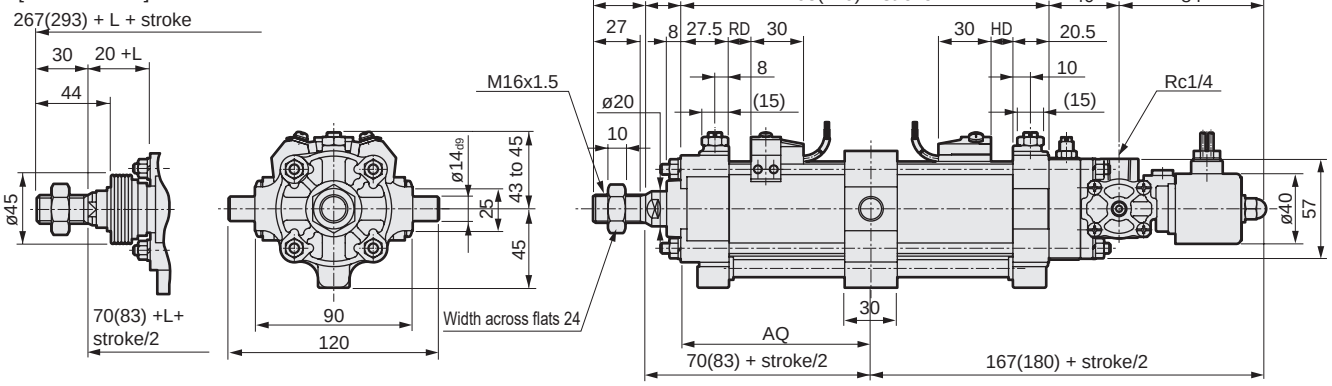

Code / Bore size (mm)	Mounting dimensions AQ	With bellows L: 50 or less	Over 50 to 100	Over 100 to 150	Over 150 to 200	Over 200 to 250	Over 250 to 300	Over 300	With switch T0, T5 T2, T3 RD	T0, T5 T2, T3 HD	T2W, T3W RD	T2W, T3W HD	T1, T2Y, T3Y, T2J RD	T1, T2Y, T3Y, T2J HD	T8 RD	T8 HD
ø50	50(63) + stroke/2	17	24	37	47	57	67	(Stroke/5)	12.5(25.5)		15.5(28.5)		12.5(25.5)		7(20.5)	

● Intermediate trunnion (shaft) (TC) ø75/ø100

*1 : Dimensions in ( ) are for the type with cushion (B).
*2 : For the L dimension, round up below the decimal point.
*3 : Dimensions of the short overall length with cushion (-S and -NS) are the same as those of the type without cushion (N) in this figure.
*4 : For the dimensions of the accessories, refer to page 739.

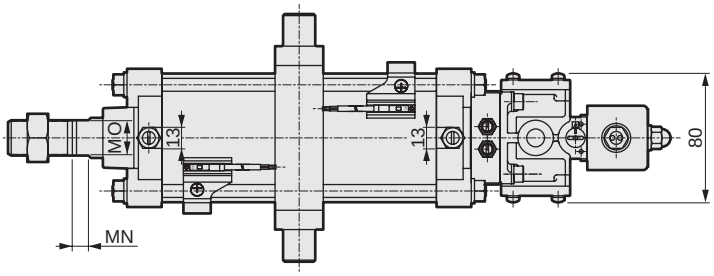

[With bellows]

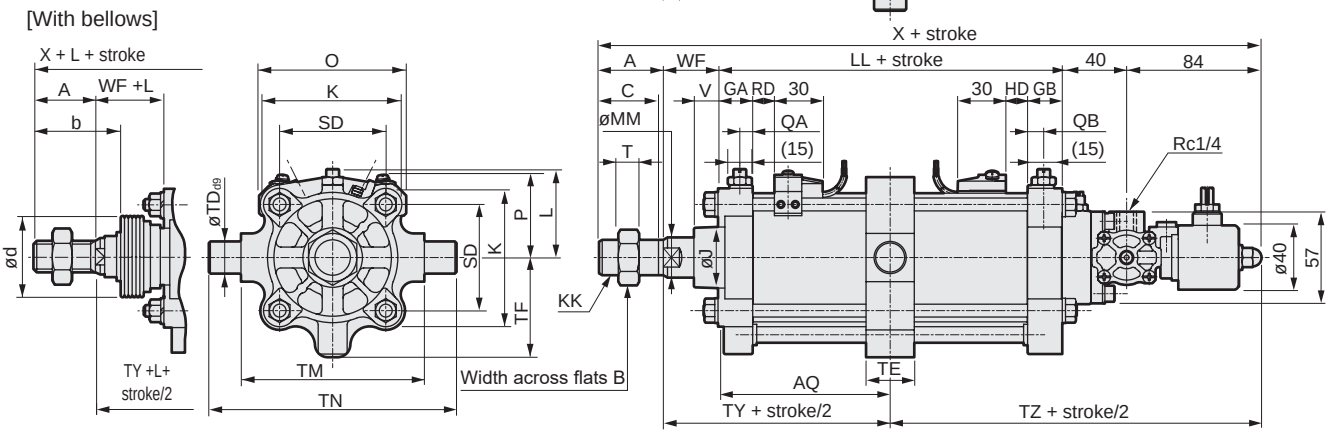

Code / Bore size (mm)	Intermediate trunnion (shaft) ø75/ø100 basic dimensions A	B	C	GA	GB	J	K	KK	L	LL	MM	MN	MO	QA	QB	SD	T	V	WF	X	Mounting dimensions AQ	TD	TE	TF
ø 75	40	32	37	22	22	38	86	M22x1.5	52 to 54	91(139)	25	10	22	8	10	66	13	15	34	289(337)	45.5(69.5)+ Stroke/2	20	30	62
ø100	40	32	37	24.5	24.5	38	109	M22x1.5	60.5 to 62.5	105(142)	25	10	22	10.7	10.7	86.3	13	15	35	304(341)	52.5(71)+ Stroke/2	35	50	78

Code / Bore size (mm)	Mounting dimensions TM	TN	TZ	TY	With bellows b	d	L: 50 or less	Over 50 to 100	Over 100 to 150	Over 150 to 200	Over 200 to 250	Over 250 to 300	Over 300	With switch O	P	T0, T5 T2, T3 RD	T0, T5 T2, T3 HD	T2W, T3W RD	T2W, T3W HD	T1, T2Y, T3Y, T2J RD	T1, T2Y, T3Y, T2J HD	T8 RD	T8 HD
ø 75	114	154	169.5(193.5)	79.5(103.5)	55	50	7	14	27	37	47	57	(Stroke/5)	92	52	13.5(37.5)		16.5(40.5)		13.5(37.5)		8.5(32.5)	
ø100	135	205	176.5(195)	87.5(106)	55	50	7	14	27	37	47	57	(Stroke/5)	118	64	17.5(36.0)		20.5(39.0)		17.5(36)		12.5(31)	

Dimensions (Single solenoid COV$^{P}_{N}$2) CAD

● Intermediate trunnion (supporting hole type) (TF) ø50

*1: Dimensions in ( ) are for the type with cushion (B).
*2: For the ℓ dimension, round up below the decimal point.
*3: The dimensions of the short overall length type with cushion (-S and -NS) is the same as that of the type without cushion (N) in this figure.
*4: For the dimensions of the accessories, refer to page 739.

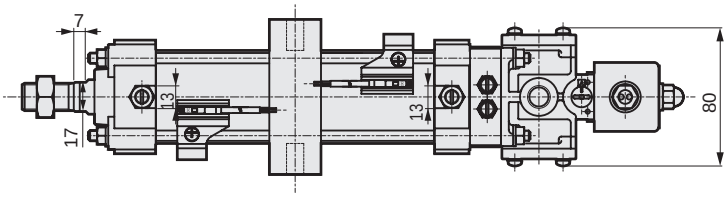

[With bellows]

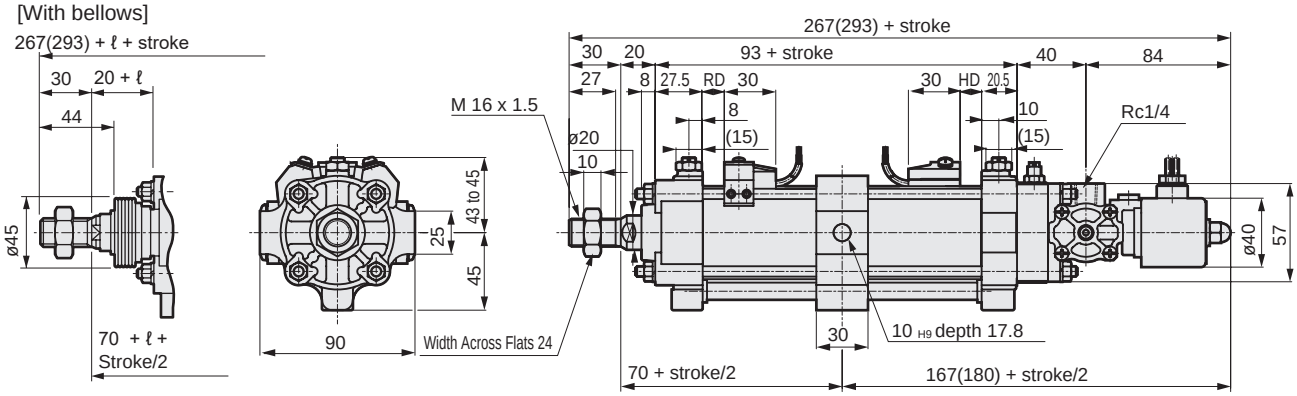

Code / Bore size (mm)	Mounting dimensions AQ	With bellows L: 50 or less	Over 50 to 100	Over 100 to 150	Over 150 to 200	Over 200 to 250	Over 250 to 300	Over 300	With switch T0, T5 T2, T3 RD	T0, T5 T2, T3 HD	T2W, T3W RD	T2W, T3W HD	T1, T2Y, T3Y, T2J RD	T1, T2Y, T3Y, T2J HD	T8 RD	T8 HD
ø50	50(63) + stroke/2	17	24	37	47	57	67	(Stroke/5)	12.5 (25.5)		15.5 (28.5)		12.5 (25.5)		7 (20.5)	

● Intermediate trunnion (supporting hole type) (TF) ø75/ø100

*1: Dimensions in ( ) are for the type with cushion (B).
*2: For the ℓ dimension, round up below the decimal point.
*3:The Dimensions of the short overall length type with cushion (-S and -NS) is the same as that of the type without cushion (N) in this figure.
*4: For the dimensions of the accessories, refer to page 739.

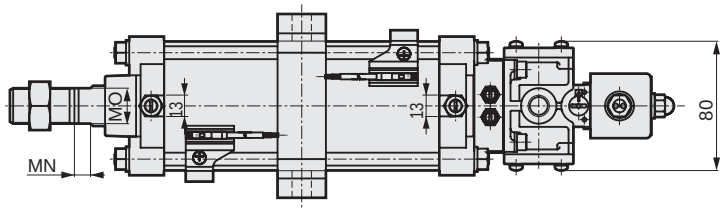

[With bellows]

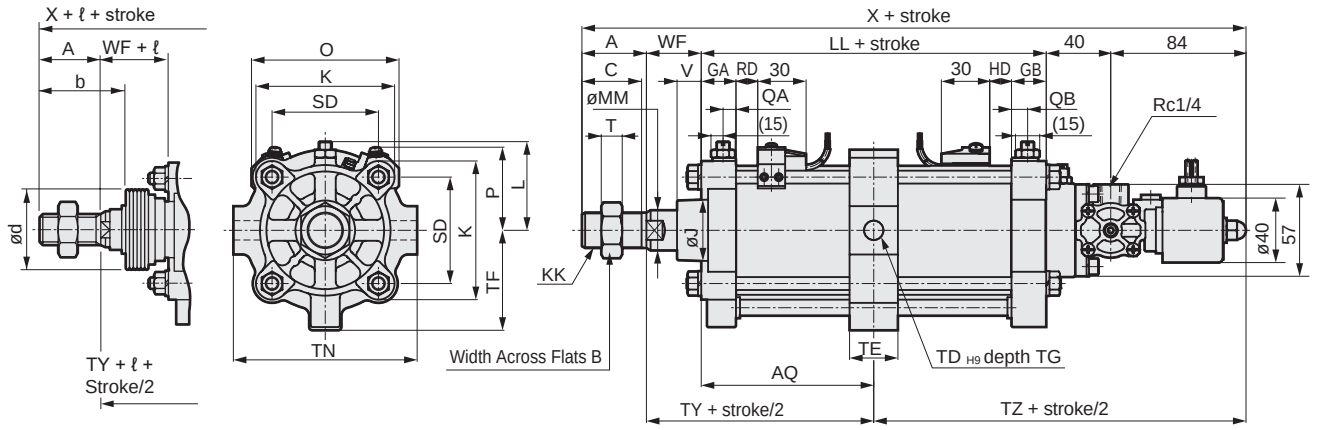

Code / Bore size (mm)	Intermediate trunnion (shaft) ø75/ø100 basic dimensions: A	B	C	GA	GB	J	K	KK	L	LL	MM	MN	MO	QA	QB	SD	T	V	WF	X	Mounting dimensions: AQ	TD	TE	TF
φ 75	40	32	37	22	22	38	86	M 22 x 1.5	52 to 54	91 (139)	25	10	22	8	10	66	13	15	34	289 (337)	45.5 (69.5) + Stroke/2	12	30	62
ø100	40	32	37	24.5	24.5	38	109	M 22 x 1.5	60.5 to 62.5	105 (142)	25	10	22	10.7	10.7	86.3	13	15	35	304 (341)	52.5 (71) + Stroke/2	16	40	78

Code / Bore size (mm)	TG	TN	TZ	TY	With bellows: b	d	L: 50 or less	Over 50 to 100	Over 100 to 150	Over 150 to 200	Over 200 to 250	Over 250 to 300	Over 300	With switch: O	P	T0, T5 T2, T3 RD	T0, T5 T2, T3 HD	T2W, T3W RD	T2W, T3W HD	T1, T2Y, T3Y, T2J RD	T1, T2Y, T3Y, T2J HD	T8 RD	T8 HD
φ 75	16.8	114	169.5 (193.5)	79.5 (103.5)	55	50	7	14	27	37	47	57	(Stroke/5)	92	52	13.5 (37.5)		16.5(40.5)		13.5 (37.5)		8.5 (32.5)	
ø100	18.6	144	176.5 (195)	87.5 (106)	55	50	7	14	27	37	47	57	(Stroke/5)	118	64	17.5(36.0)		20.5(39.0)		17.5 (36)		12.5 (31)	

About non-sag block

Depending on its stroke, a non-sag block will be added to the middle part of the cylinder.

Number of non-sag blocks depending on stroke

Tube size (mm)	Stroke (mm)	Number of non-sag blocks
ø50	501 to 1000	1
ø75	501 to 1000	1
ø100	501 to 1000	1

The dimensions of non-sag blocks are as shown in the figure below.
When attaching the cylinder, take into account the dimensions of the non-sag blocks.

● ø50,ø75

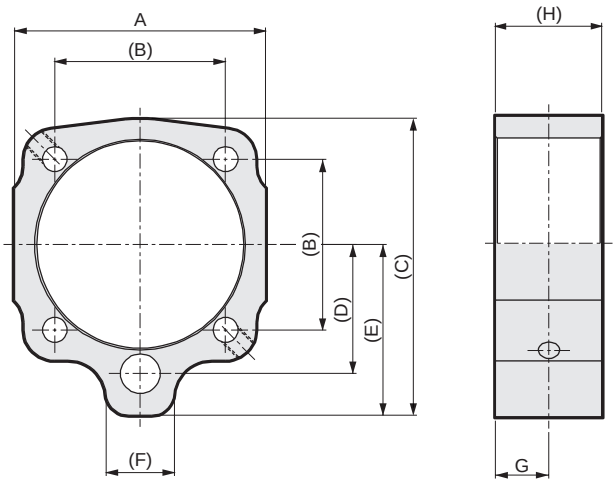

● ø100

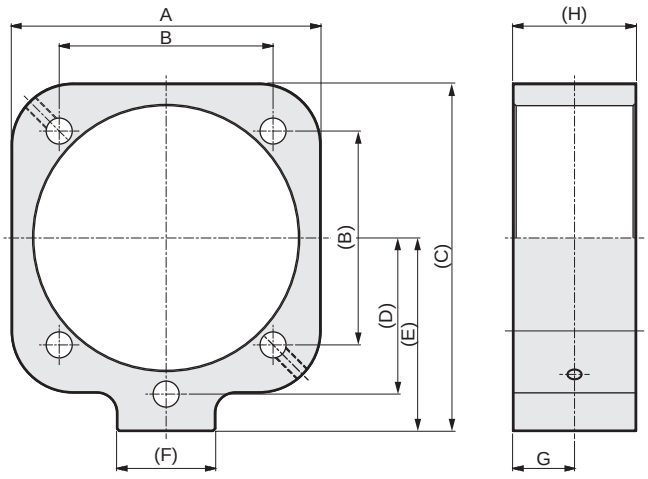

Tube size (mm)	Non-sag block dimensions							
	A	B	C	D	E	F	G	H
ø50	66	45	78	34	45	18	15	30
ø75	100	66	112	48	62	22	15	30
ø100	125	86	140.5	63	78	40	25	50

MEMO

SCP*3
CMK2
CMA2
SCM
SCG
SCA2
SCS2
CKV2
CAV2/COVP/N2
SSD2
SSG
SSD
CAT
MDC2
MVC
SMG
MSD/MSDG
FC*
STK
SRL3
SRG3
SRM3
SRT3
MRL2
MRG2
SM-25
ShkAbs
FJ
FK
Spd Contr
Ending

Dimensions with options (TB1)

● CAV2-LB, CAV2-N-LB (double solenoid)
Axial foot (LB) with round terminal box (TB1) ø50

*1: For the dimensions of the accessories, refer to page 739.
*2: Dimensions with terminal box of the rod side flange and intermediate trunnion are the same as those of the axial foot.
For the mounting method, refer to page 718.

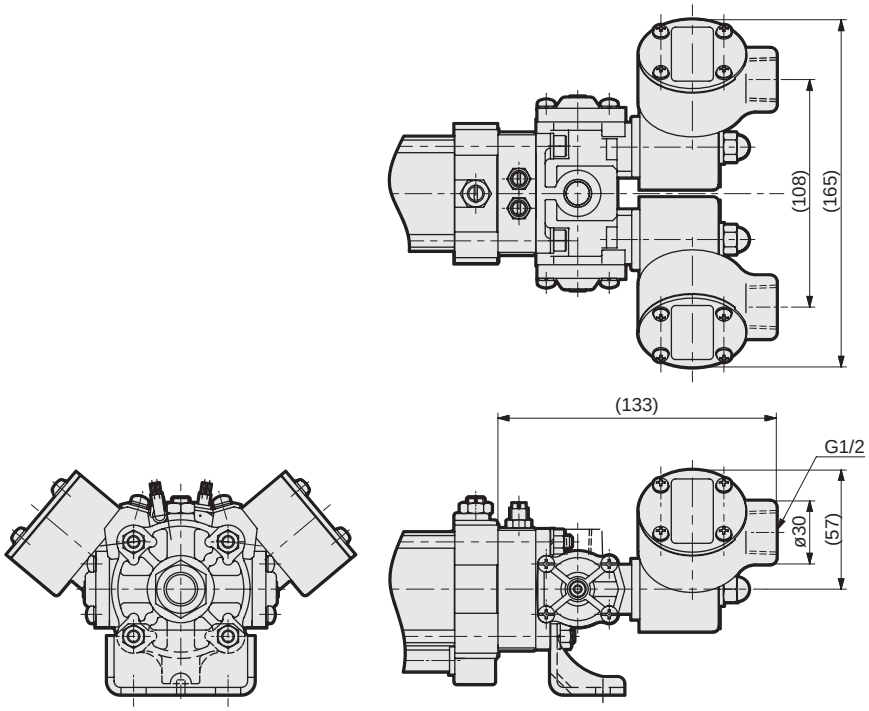

● CAV2-LB, CAV2-N-LB (double solenoid)
Axial foot (LB) with round terminal box (TB1) ø75/ø100

*1: For the dimensions of the accessories, refer to page 739.
*2: Dimensions with terminal box of the rod side flange and intermediate trunnion are the same as those of the axial foot.
For the mounting method, refer to page 719.

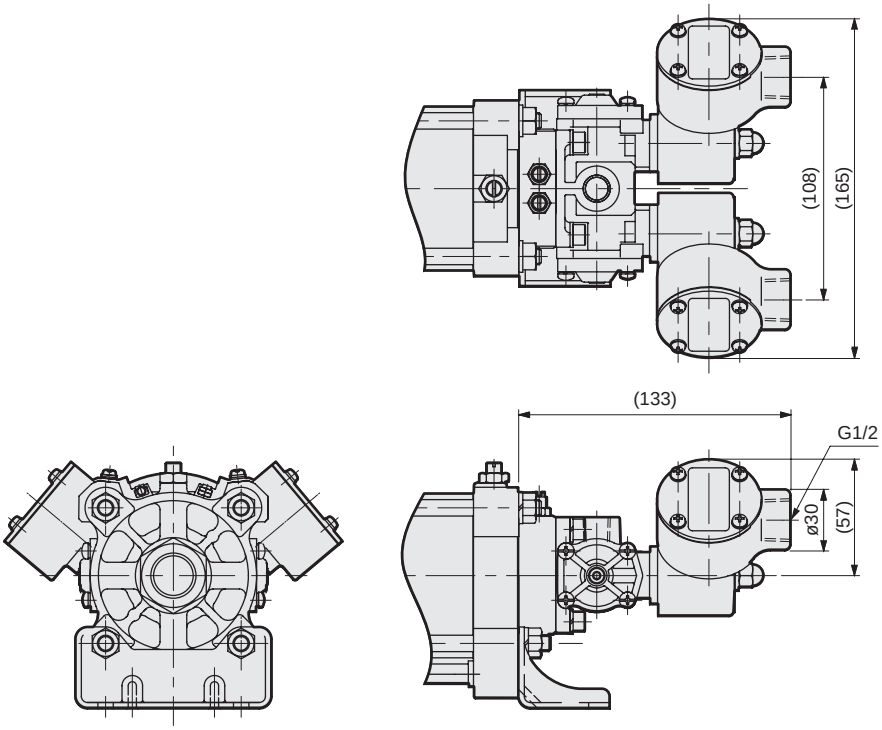

Dimensions with options (TB1)

● CAV2-CA, CAV2-N-CA (double solenoid)
Clevis (CA) with round terminal box (TB1) ø50

*1 : For the dimensions of the accessories, refer to page 739.
*2 : Dimensions with terminal box of the rod side flange and intermediate trunnion are the same as those of the axial foot.
For the mounting method, refer to page 718.

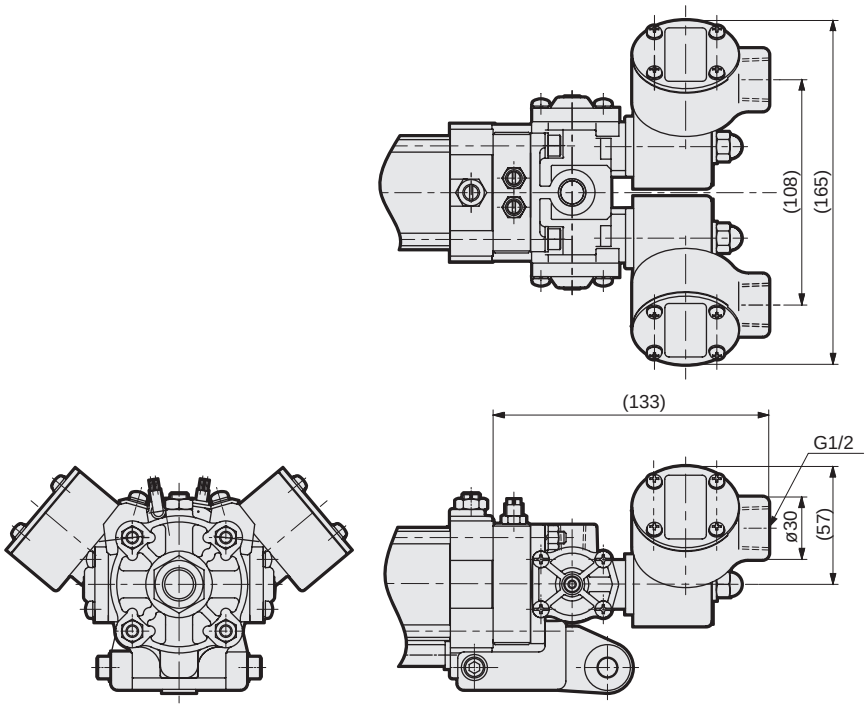

● CAV2-CA, CAV2-N-CA (double solenoid)
Clevis (CA) with round terminal box (TB1) ø75/ø100

*1 : For the dimensions of the accessories, refer to page 739.
*2 : Dimensions with terminal box of the rod side flange and intermediate trunnion are the same as those of the axial foot.
For the mounting method, refer to page 719.

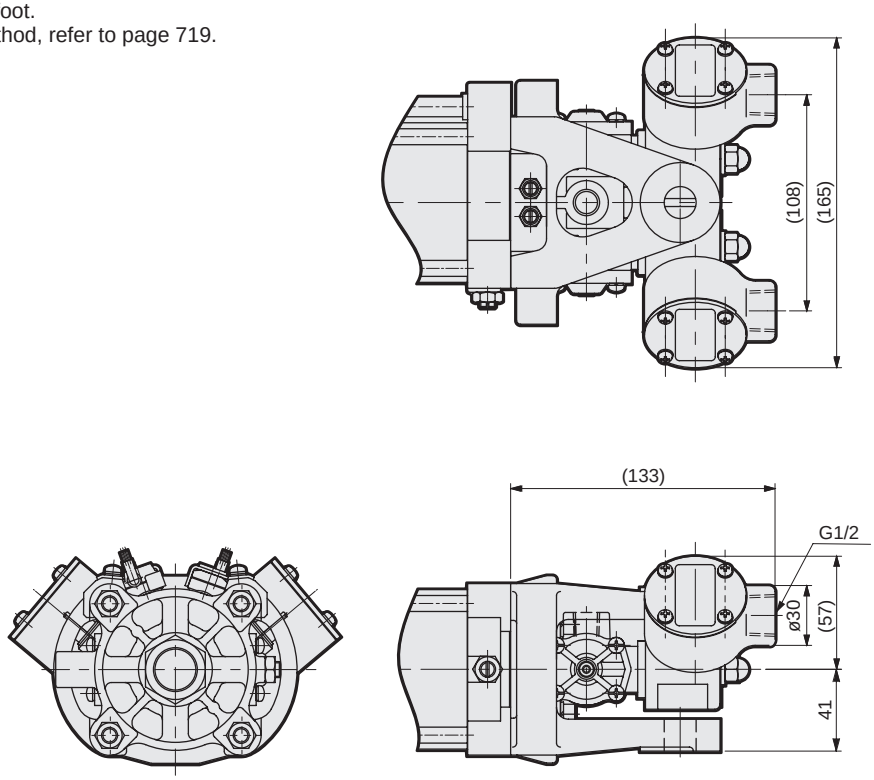

Dimensions with options (TB1)

● COV$^{P}_{N}$2-LB/COV$^{P}_{N}$2-N-LB (single solenoid)
Axial foot (LB) with round terminal box (TB1) ø50

*1: For the dimensions of the accessories, refer to page 739.
*2: Dimensions with terminal box of the rod side flange and intermediate trunnion are the same as those of the axial foot. For the mounting method, refer to page 724.

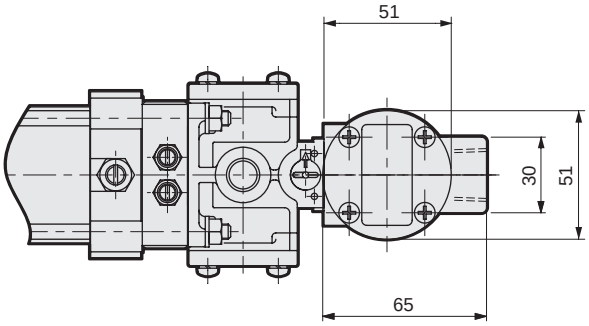

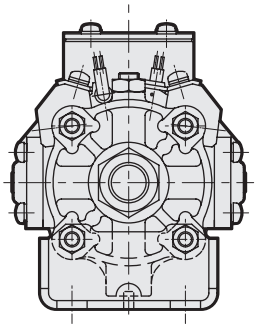

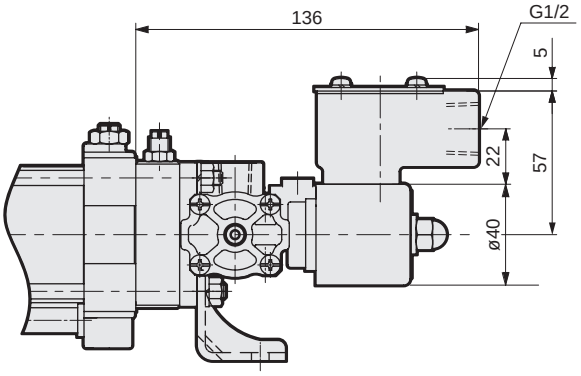

● COV$^{P}_{N}$2-LB/COV$^{P}_{N}$2-N-LB (single solenoid)
Axial foot (LB) with round terminal box (TB1) ø75/ø100

*1: For the dimensions of the accessories, refer to page 739.
*2: Dimensions with terminal box of the rod side flange and intermediate trunnion are the same as those of the axial foot. For the mounting method, refer to page 725.

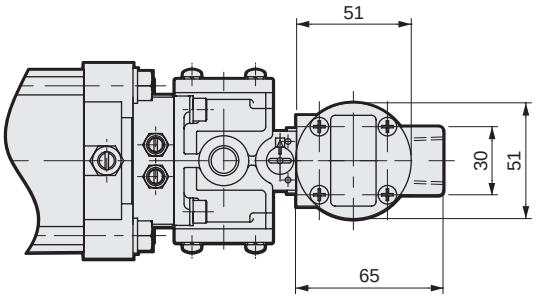

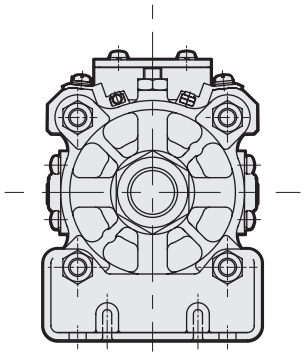

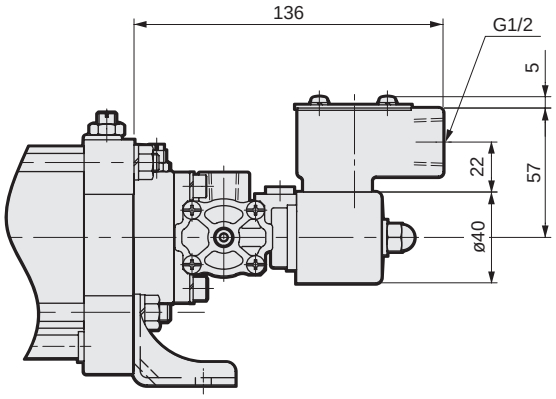

Dimensions with options (TB1)

● COV$^{P}_{N}$2-CA/COV$^{P}_{N}$2-N-CA (single solenoid)
Clevis (CA) with round terminal box (TB1) ø50

*1: For the dimensions of the accessories, refer to page 739.
*2: Dimensions with terminal box of the rod side flange and intermediate trunnion are the same as those of the axial foot.
For the mounting method, refer to page 724.

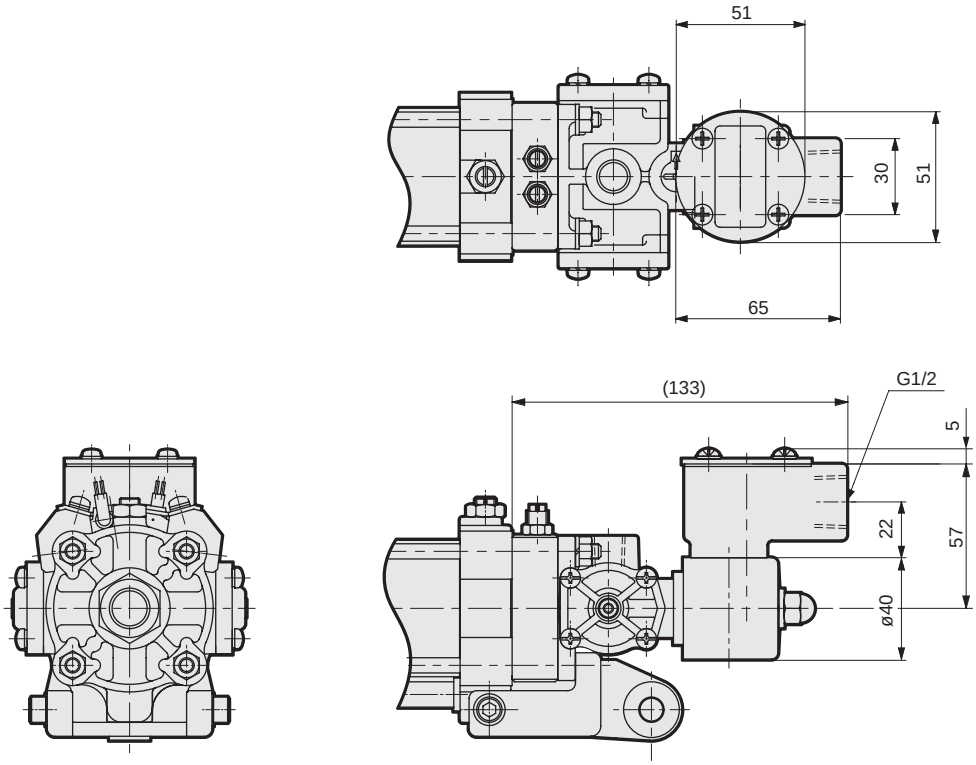

● COV$^{P}_{N}$2-CA/COV$^{P}_{N}$2-N-CA (single solenoid)
Clevis (CA) with round terminal box (TB1) ø75/ø100

*1: For the dimensions of the accessories, refer to page 739.
*2: Dimensions with terminal box of the rod side flange and intermediate trunnion are the same as those of the axial foot.
For the mounting method, refer to page 725.

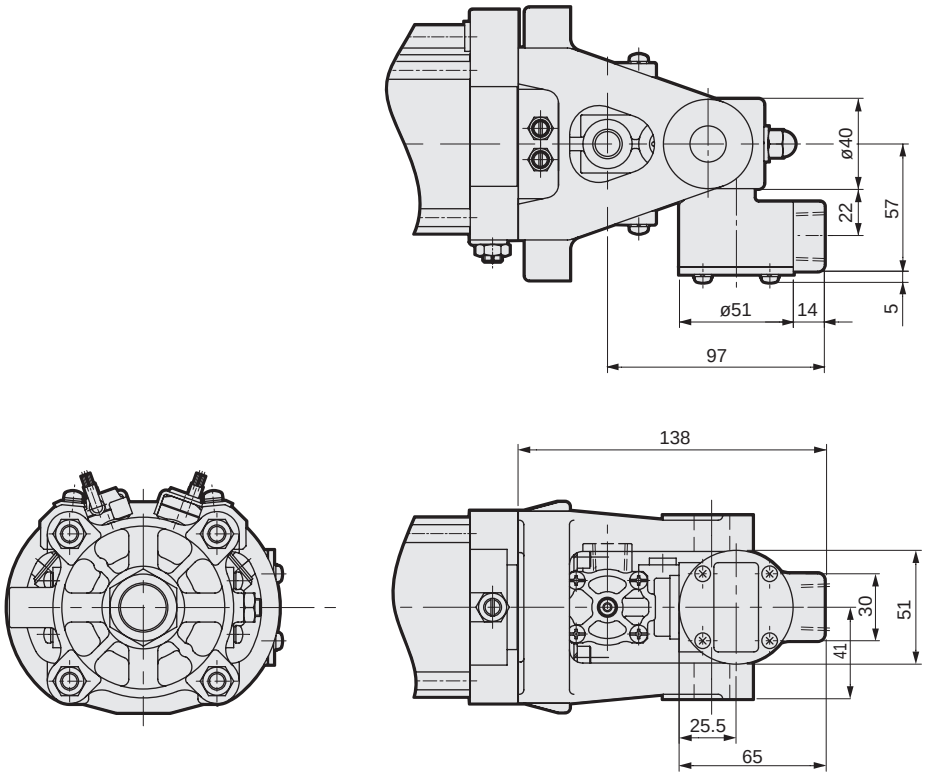

SCP*3
CMK2
CMA2
SCM
SCG
SCA2
SCS2
CKV2
CAV2/ COVP/N2
SSD2
SSG
SSD
CAT
MDC2
MVC
SMG
MSD/ MSDG
FC*
STK
SRL3
SRG3
SRM3
SRT3
MRL2
MRG2
SM-25
ShkAbs
FJ
FK
Spd Contr
Ending

Dimensions with options (TB2)

● CAV2-LB, CAV2-N-LB (double solenoid)
Axial foot (LB) with square terminal box (TB2) ø50

*1: For the dimensions of the accessories, refer to page 739.
*2: Dimensions with terminal box of the rod side flange and intermediate trunnion are the same as those of the axial foot.
For the mounting method, refer to page 718.

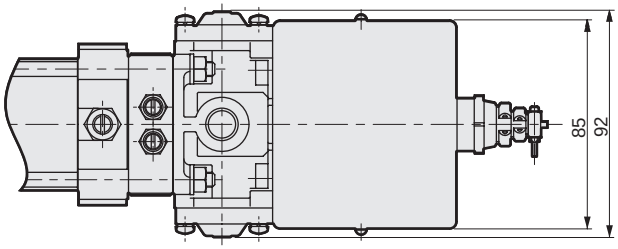

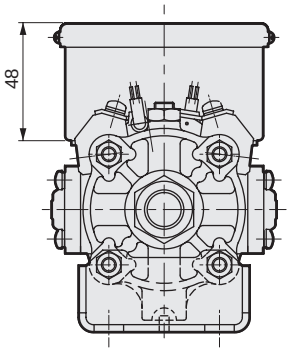

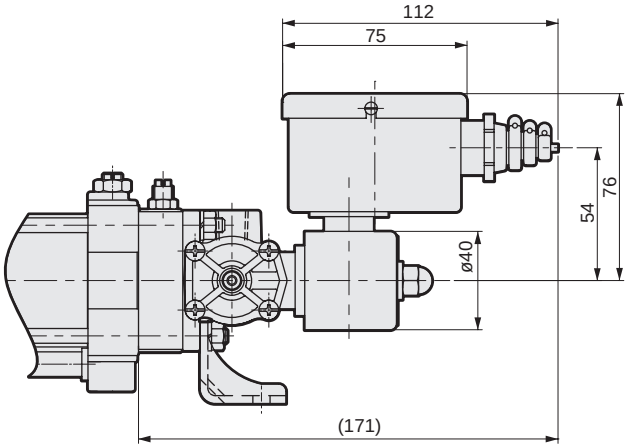

● CAV2-LB, CAV2-N-LB (double solenoid)
Axial foot (LB) with square terminal box (TB1) ø75/ø100

*1: For the dimensions of the accessories, refer to page 739.
*2: Dimensions with terminal box of the rod side flange and intermediate trunnion are the same as those of the axial foot.
For the mounting method, refer to page 719.

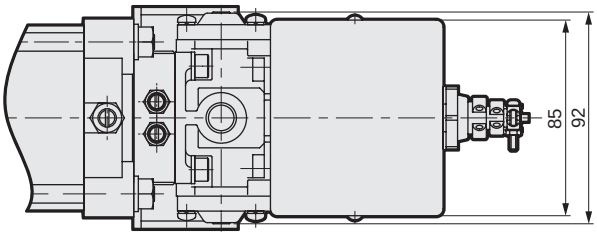

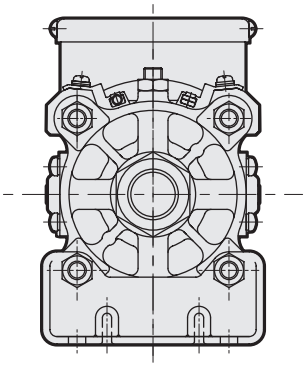

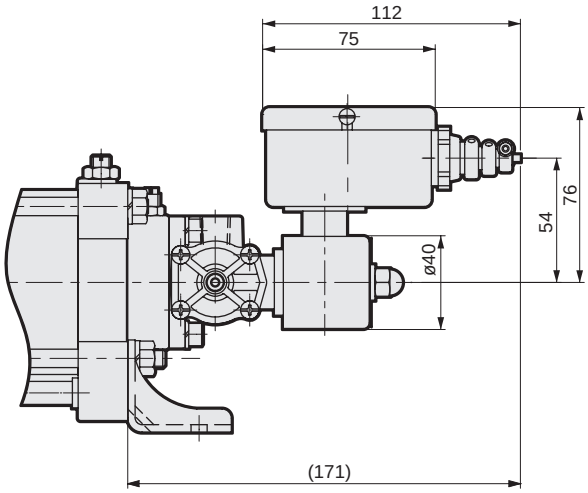

Dimensions with options (TB2)

● CAV2-CA, CAV2-N-CA (double solenoid)
Clevis (CA) with square terminal box (TB2) ø50

*1: For the dimensions of the accessories, refer to page 739.
*2: Dimensions with terminal box of the rod side flange and intermediate trunnion are the same as those of the axial foot.
For the mounting method, refer to page 718.

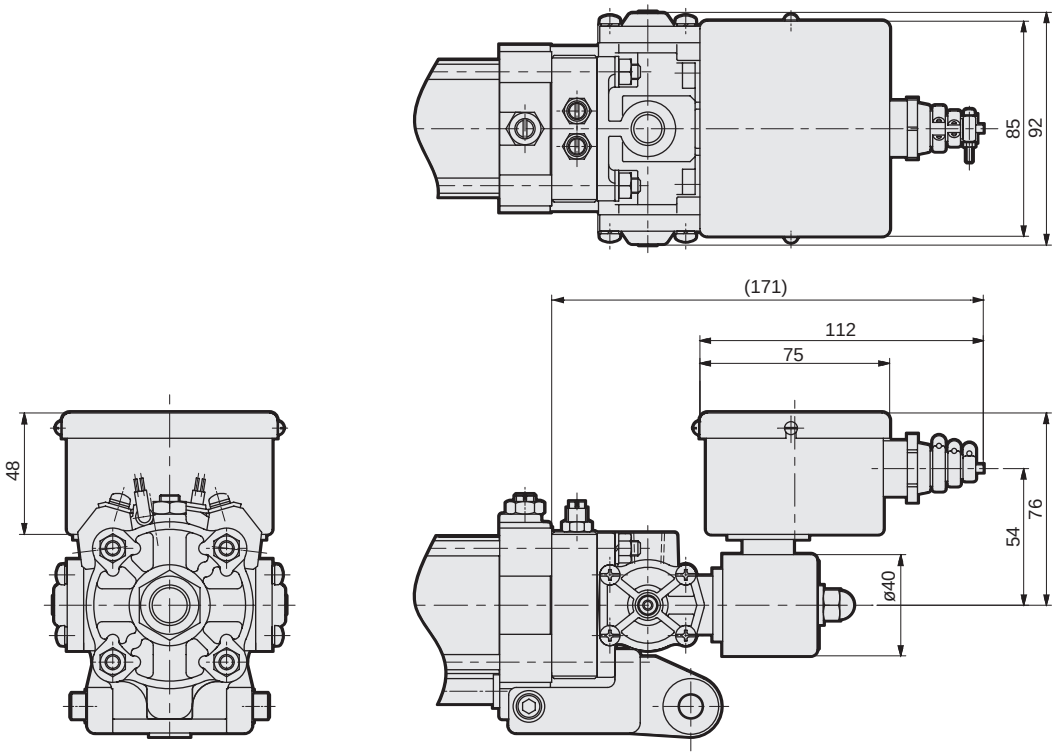

SCP*3
CMK2
CMA2
SCM
SCG
SCA2
SCS2
CKV2
CAV2/COVP/N2
SSD2
SSG
SSD
CAT
MDC2
MVC
SMG
MSD/MSDG
FC*
STK
SRL3
SRG3
SRM3
SRT3
MRL2
MRG2
SM-25
ShkAbs
FJ
FK
Spd Contr
Ending

Dimensions with options (Q)

● CAV2/COV$^{P}_{N}$2/CAV2-N/COV$^{P}_{N}$2-N
Supply block (Q) ø50

*1: For the dimensions of the accessories, refer to page 739.
*2: Dimensions with air supply block on the rod side flange and intermediate trunnion are the same as those of the axial foot.
For the mounting method, refer to pages 718 and 724.

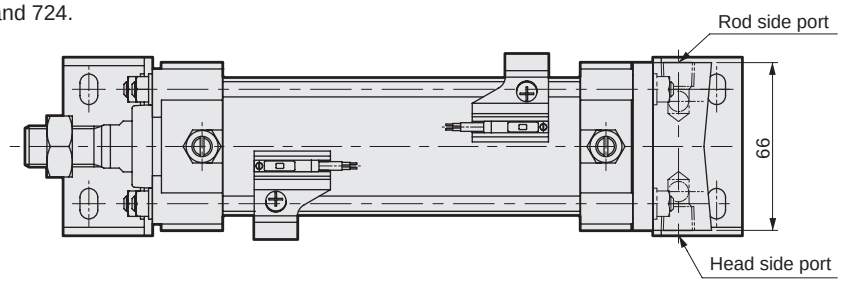

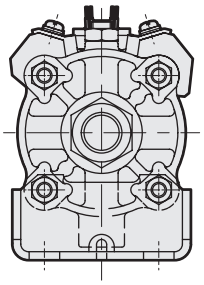

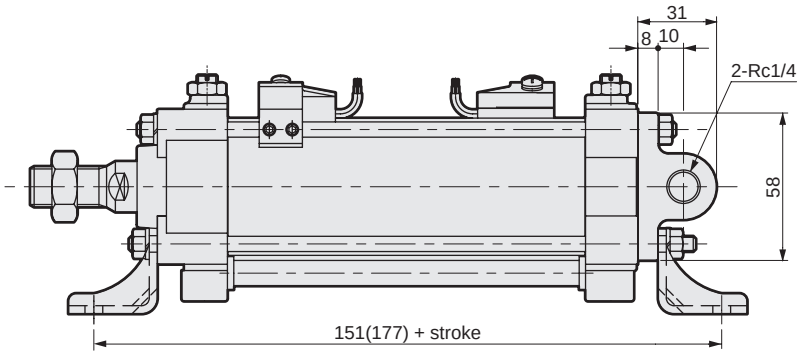

● CAV2/COV$^{P}_{N}$2/CAV2-N/COV$^{P}_{N}$2-N
Supply block (Q) ø75/ø100

*1: For the dimensions of the accessories, refer to page 739.
*2: Dimensions with air supply block on the rod side flange and intermediate trunnion are the same as those of the axial foot.
For the mounting method, refer to pages 719 and 725.

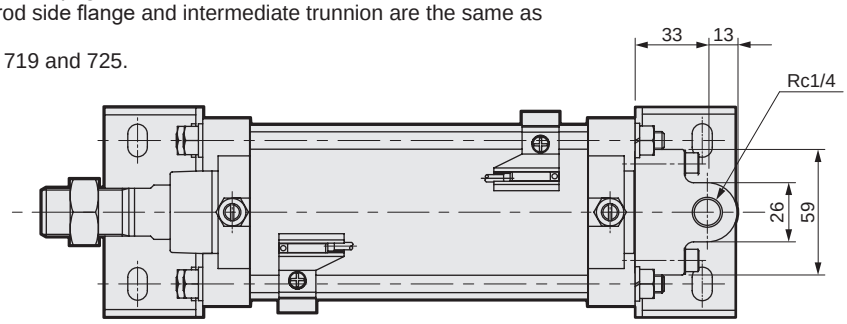

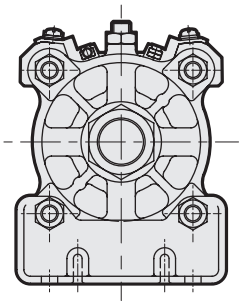

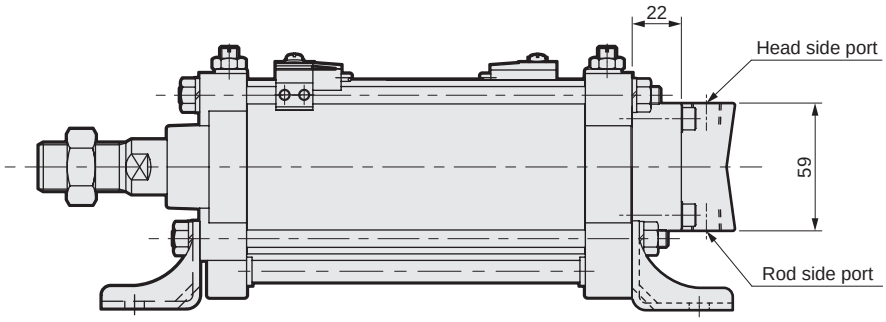

Dimensions: Accessories (rod eye/bracket/pin)

● Rod eye (I)

Material: Cast iron
Painted

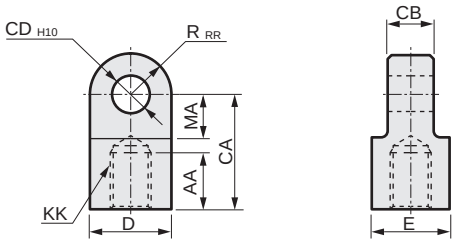

Model No.	Applicable bore size (mm)	AA	CA	CB	CD	D	E	KK	MA	RR	Weight (g)
CAV2-50-I	ø50	25	50	$20^{0}_{-0.3}$	14	26	26	M16x1.5	20	15	217
CAV2-75-I	ø75, 100	30	65	$28^{0}_{-0.3}$	20	38	35	M22x1.5	28	22.5	622

● Rod eye pin (P1)

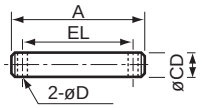

Note: A split pin and a washer are included.

● Clevis bracket (B2)/pin (P2) for ø50

Material: Body: Cast iron, painted
Pin : Steel, zinc chromate treatment

Model No.
CAV2-50-B2

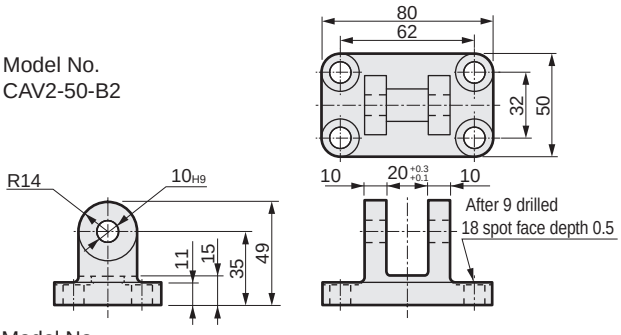

Model No.
CAV2-50-P2

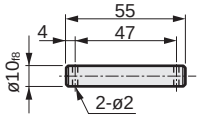

*1 : Clevis bracket includes a pin, split pin (JIS B 1351 ø2 x 15) and plain washer (JIS B1256 larger diameter for M10).
*2 : For the oscillating range when combined with eye bracket (CA), refer to page 740.

● Terminal box

TB1 (for double solenoid, single solenoid)

TB2 (for double solenoid)

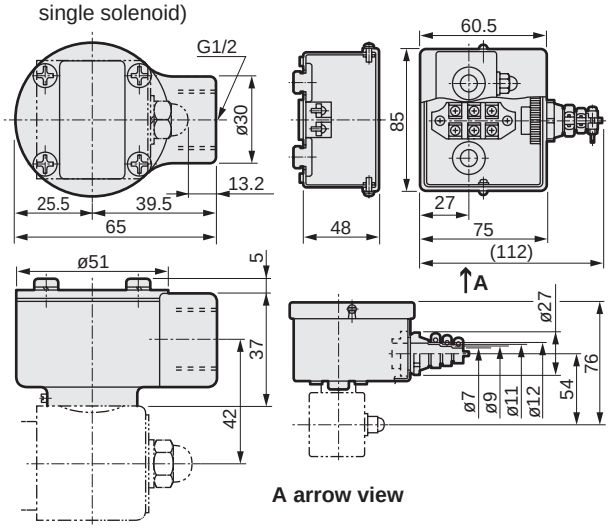

A arrow view

*1 : Built into the cylinder before shipment if ordered together with the cylinder.
*2 : Do not rotate the bonnet with the cap nut tightened.
Doing so may disconnect the coil and lead wire.

● Rod clevis (Y)

Material: Cast iron
Painted

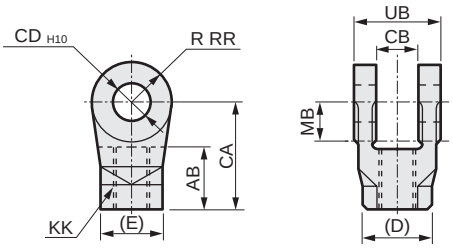

Model No.	Applicable bore size (mm)	AB	CA	CB	CD	D	E	KK	MB	RR	UB	Wt (g)
CAV2-50-Y	ø50	25	50	$20^{+0.3}_{0}$	14	26.6	23	M16x1.5	20	15	42	189
CAV2-75-Y	ø75, 100	30	65	$28^{+0.3}_{0}$	20	40.4	35	M22x1.5	30	22.5	60	577

*1: The MB dimension is the effective length of the CB dimension. *2: A pin, a washer and a split pin are included.

Model No.	Applicable bore size (mm)	A	CD	D	EL	Plain washer JIS B 1256 larger diameter	Split pin JIS B 1351	Wt (g)
CAV2-50-P1	ø50	62	$ø14^{-0.012}_{-0.045}$	4	53	For M14	ø4x20	96
CAV2-75-P1	ø75, 100	82	$ø20^{-0.042}_{-0.075}$	4	72	For M20	ø4x25	243

● Clevis bracket (B2)/pin (P2) for ø75/ø100

Material: Body: Cast iron, painted
Pin : Steel, zinc chromate treatment

Model No.
CAV2-75-B2

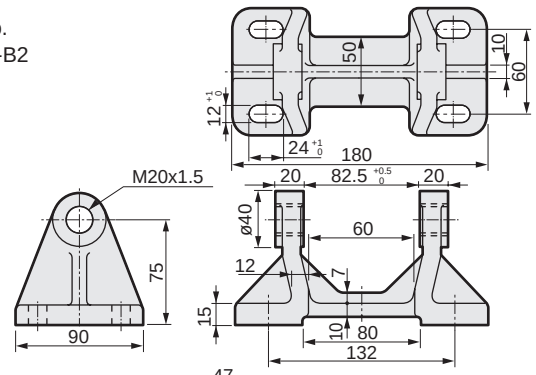

Model No.
CAV2-75-P2

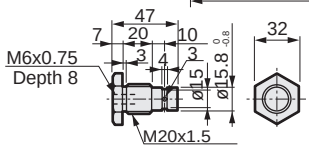

*1 : Clevis bracket includes a pin and toothed washer (JIS B 1225 for M20).
*2 : For the oscillating range when combined with eye bracket (CA), refer to page 740.

● Muffler (MF1)

Supply block (Q)

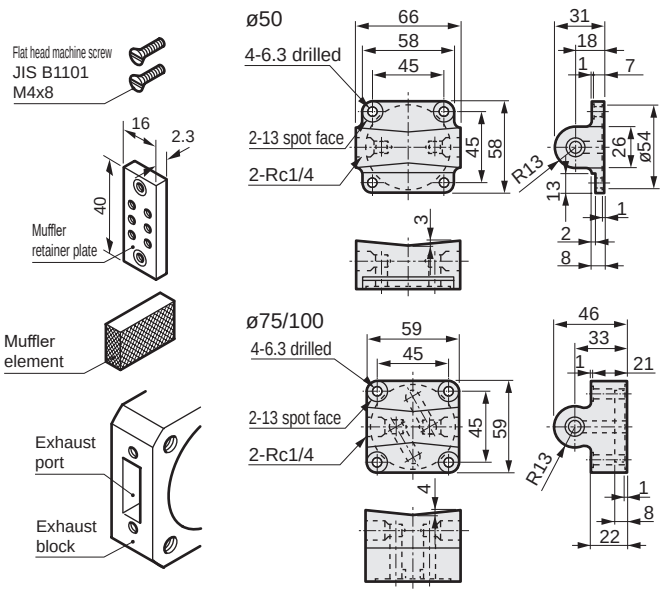

Safety Precautions

Be sure to read this section before use.

Refer to Intro Page 73 for general information of the cylinder, and to Intro Page 80 for general information of the cylinder switch.

Product-specific cautions: Cylinder with valve CAV2/COV$^{P}_{N}$2 Series

Design/selection

WARNING

■ An inhale effect may be generated at the exhaust port of the valve due to valving element operation, causing the intake of foreign matter near the exhaust port. Foreign matter may also enter when the exhaust port is pointed upwards. Install a silencer and/or arrange the piping of the exhaust port to open facing downward.

● The actuator will not operate correctly if the exhaust air is not discharged smoothly.

CAUTION

■ Instantaneous energization

When the double solenoid is used with instantaneous energization, 0.1 sec. and over energization time is required.

■ If the 2-position double solenoid is started and then switched, it will hold that status unless a reverse operation electrical signal is input.

■ Check for leakage current to avoid malfunction caused by leakage current from other fluid control components.

● When a programmable controller is used, leakage current may affect the valve and cause a malfunction.

● The values affected by leakage current depend on the voltage type. Refer to the table below.

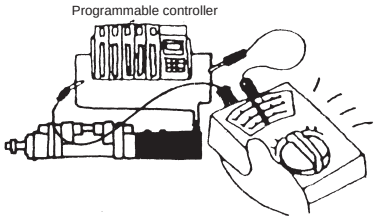

Reference

Using 100 VAC	3.0 mA or less
Using 200 VAC	1.5 mA or less

■ Switch the valve at least once every 30 days to prevent malfunction.

■ Oscillating range

◎ Note that the oscillating range of the combination of eye bracket (CA) and clevis bracket (B2) is limited as in the figure below.

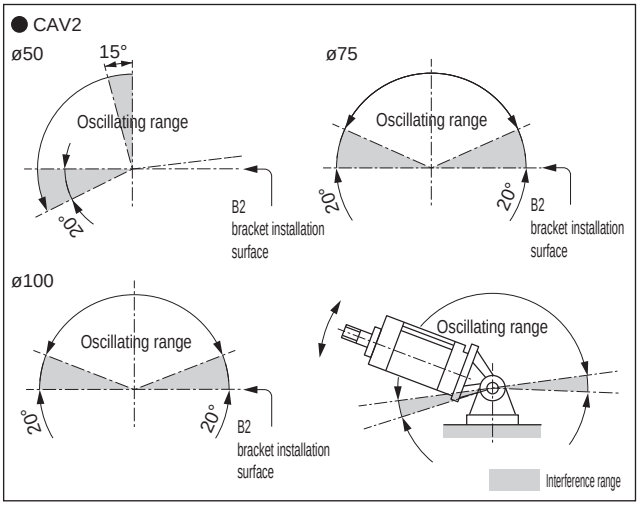

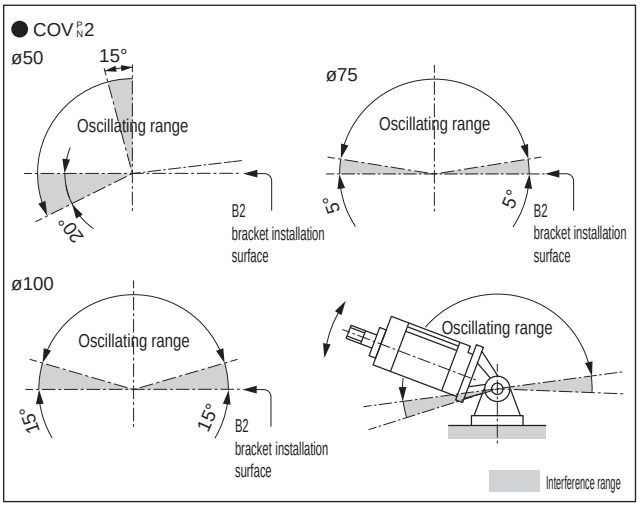

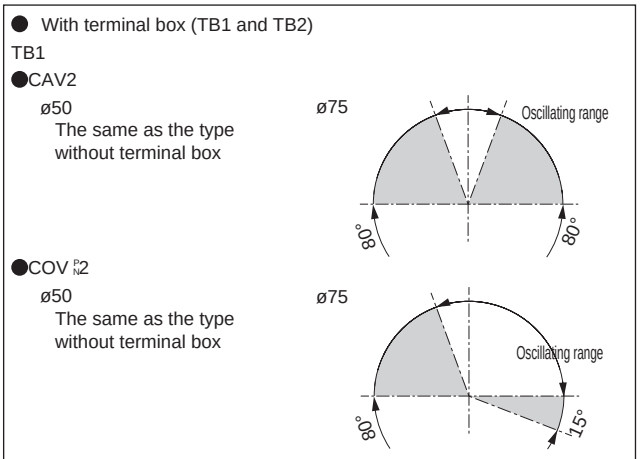

The oscillating range of TB2 (CAV2 ø50) is the same as that of the type without terminal box.
COV$^{P}_{N}$2 ø50/ø75 and CAV2 ø75 cannot be selected.

Mounting, installation and adjustment

⚠ WARNING

■ Manual operation causes the connected device to function. Make sure that there is no danger before performing manual operation.
If you have activated the manual override of the valve, return it to the origin (OFF state) before operating the equipment. Be sure to confirm automatic return (for non-locking CAV2, COV$^{P}_{N}$2) or origin (OFF state) (for locking COV$^{P}_{N}$2).

[Example]

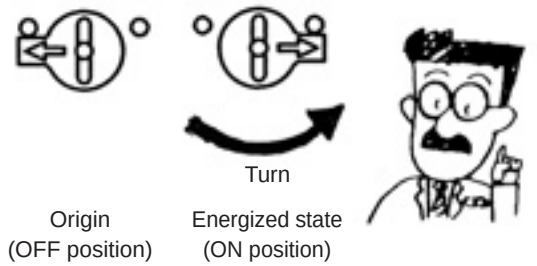

● If compressed air is supplied when not at origin, the cylinder will become operational, creating hazardous conditions.

■ When moving the load with CAV2/COV2 attached vertically, use within the specified range shown as below.
The speed of the cylinder cannot be adjusted outside the range.

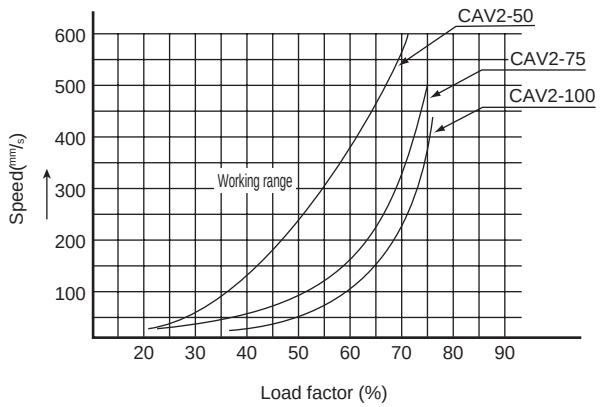

⚠ CAUTION

■ Be careful not to hit the solenoid valve with a tool or the equipment during mounting.

■ Do not support the cylinder with pipes during mounting.

■ Do not pick up the product by the coil lead wire.
● This may lead to disconnection.

■ Polarity
All series are without polarity. (Non-polar)

■ Applied voltage
When wiring the valve, check that the voltage (AC or DC) and voltage are correct. Failure to comply may cause defective operation or burnout of the coil.

■ Checking wiring
After wiring, check that the connections are correct.

Use/maintenance

⚠ WARNING

■ Manual operation causes the connected device to function. Make sure that there is no danger before performing manual operation.

⚠ CAUTION

■ Infrequent use

● Switch the valve at least once every 30 days to prevent malfunction.

■ After disassembling and assembling the valve, be sure to check normal valve operation with the following procedure.

Work procedure

1. Check that the locking manual override is at the origin (OFF state).
2. Configure the unit to low pressure. (0.15MPa)
3. Set the manual override to the operation side (push the non-locking, turn the manual dial for the locking) to check that the cylinder is operational.
4. Return the locking manual override to the origin (OFF state) and check that the cylinder returns. (Manual operation check is complete.)
5. Check the operation electrically.
   ●After manual operation check, energize/de-energize to confirm operation.

■ Manual operation

● For CAV2

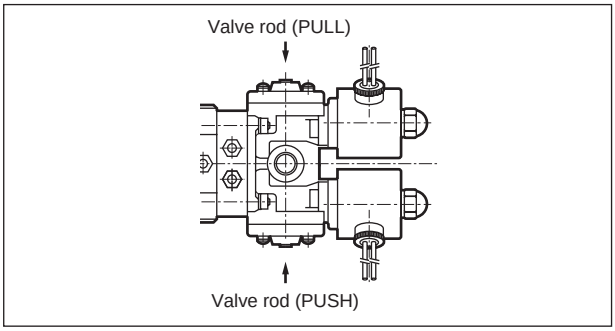

● Pushing the valve rod (PUSH) with a screwdriver extrudes the piston rod.
● Pushing the valve rod (PULL) with a screwdriver retracts the piston rod.
● Although this product is a non-locking, the piston rod is held as it is when PUSH or PULL is pressed.

● For COV2

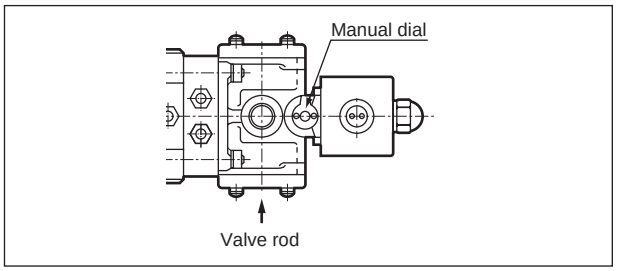

● Turning the manual dial energizes the solenoid. (Locking)
● Pressing the valve rod with a screwdriver, etc., energizes the solenoid. (Non-locking)
For COV2-75 and 100 with CA or B2 mounting bracket, ⚠manual operation is possible with the non-locking but not with the locking.

■ How to adjust the speed and cushion of CAV2/COV2

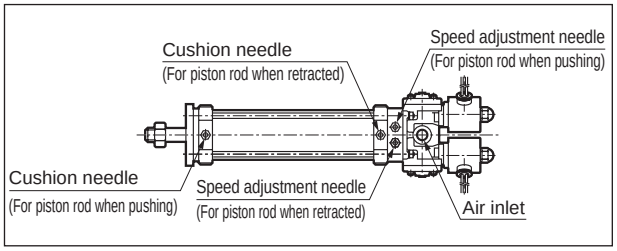

1. The speed decreases when the speed adjustment needle is turned clockwise with a screwdriver, and increases when it is turned counterclockwise.
2. The cushioning effect increases when the cushion needle is turned clockwise with a screwdriver, and decreases when it is turned counterclockwise.

Space saving cylinder

	Page
Compact cylinder **SSD2** Series	745
Guided super compact cylinder **SSG** Series	1065
Compact cylinder **SSD** Series	1081
Cartridge cylinder **CAT** Series	1339
Small direct mounting cylinder **MDC2** Series	1345
Small cylinder with suction pad **MVC** Series	1371
Compact cylinder **SMG** Series	1383
Small compact cylinder **MSD/MSDG** Series	1415
Flat compact cylinder **FC*** Series	1473
Stopper cylinder **STK** Series	1509

SSD2

Compact cylinder

ø12/ø16/ø20/ø25/ø32/ø40/ø50/ø63
ø80/ø100/ø125/ø140/ø160/ø180/ø200

Space saving structure

Overview

Space saving series with a wide range of strokes and switch mounting surface options compared with conventional models.
A widely varied series of space-saving cylinders, suitable for everything from general environments to specific applications.

Features

Cylinder switch grooves provided on four surfaces

A cylinder switch can be mounted on the same surface as the piping port, which improves visibility and maintenance efficiency. (ø20 to ø100)

End thread options

Rod ends can be selected from two options: female thread (standard) and male thread (option).

All bore sizes, T-switch mountable

The T-switch used in many CKD products can be mounted on cylinders of all bore sizes. The use of a unified switch helps to reduce stock quantity.

The cylinder switches T2YH, T2YV, T3YH, and T3YV are scheduled for end of production at the end of December 2023.

CONTENTS

Product introduction 746
Series variation 748
Variation and option combination selection table 750

- Double acting/single rod (SSD2) 752
- Double acting/single rod/large bore size (SSD2) 768
- Double acting/single rod/high load (SSD2-K) 776
- Double acting/single rod/long stroke (SSD2-L) 792
- Single acting/push (SSD2-X) 802
- Single acting/pull (SSD2-Y) 802
- Double acting/heat resistant (SSD2-T1) 820
- Double acting/with heat resistant cylinder switch (SSD2-T1L) 824
- Double acting/high load/rubber-air cushioned (SSD2-K- *C) 832
- Double acting/position locking (SSD2-Q) 840
- Double acting/fine speed (SSD2-F, SSD2-KF) 854
- Double acting/low speed (SSD2-O) 858
- Double acting/high load/low friction (SSD2-KU) 864
- Double acting/double rod (SSD2-D) 868
- Double acting/double rod/large bore size (SSD2-D) 882
- Double acting/back to back (SSD2-B) 890
- Double acting/2-stage (SSD2-W) 902
- Double acting/rotation-stop (SSD2-M) 910
- Double acting/double rod/rotation-stop (SSD2-DM) 924
- Double acting/rubber scraper (SSD2-G) 936
- Double acting/coolant proof (SSD2-G2/G3) 946
- Double acting/high load/coolant proof (SSD2-KG2/KG3) 956
- Double acting/coil scraper (SSD2-G1)/anti-spatter adherence (SSD2-G4) 966
- Double acting/high load/coil scraper (SSD2-KG1)/anti-spatter adherence (SSD2-KG4) 974
- Double acting/double rod/coil scraper (SSD2-DG1)/anti-spatter adherence (SSD2-DG4) 984
- Double acting/environment-resistant scraper (SSD2-G5) 992
- Double acting/high load/environment-resistant scraper (SSD2-KG5) 1002
- Double acting/with strong magnetic field proof switch (SSD2-L4) 1012
- Double acting/with strong magnetic field proof switch/with coil scraper (SSD2-G1L4) 1018
- Double acting/high load/strong magnetic field proof with switch (SSD2-KL4) 1024
- Double acting/high load/with strong magnetic field proof switch/with coil scraper (SSD2-KG1L4) 1030
- Double acting/clean-room specifications (SSD2-P7*) 1036

SSD2 Series common switch dimensions 1044
SSD2 Series common accessory dimensions 1046
List of mounting bolts 1050
⚠ Safety precautions 1058

Wide application from general environment to specific use SSD2 Series

Substantial series for specific use

Coolant resistant G2/G3 Series

NBR(G2) and FKM(G3) packings are available for various coolants.

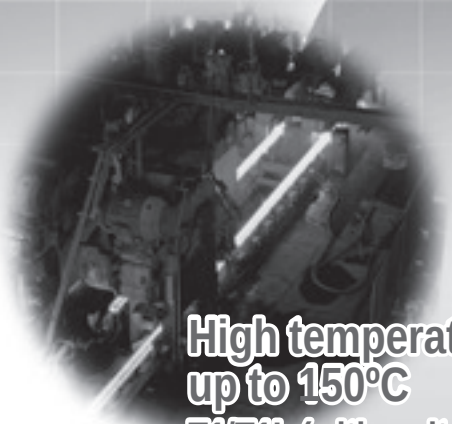

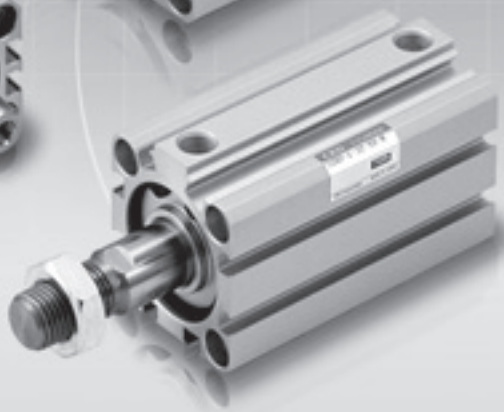

High temperature environments up to 150°C

T1/T1L (with switch) Series

FKM packing and fluorine grease are suitable for use under high temperature environments.

Rechargeable battery manufacturing process P4 Series

Available for restriction of copper related materials, dust countermeasures and longer lifespan with ultra dry air during the rechargeable battery manufacturing process.

Welding environments G1/G4 Series

Available from spot welding (G1) to arc welding (G4).

Dust environments G/G5 Series

Reinforced scraper (G) and replaceable dust wiper (G5) options for dusty environments.

Clean room specification P71/P7 Series

Vacuuming (P71) or exhaust treatment (P7) is available for applications with use from the center of the workpiece.
P5 Series with material restriction (copper, silicon,and halogen) is also available.

Other variations

Rubber-air cushioned C

Reduce the impact noise and force at stroke end.
Suitable for impact reduction in operation and noise reduction in facilities.

Noise reduction

Fine speed F

Slow 1mm/s

The special sliding structure greatly reduces adherence and stick-slip of packing, and makes it possible to operate at ultra low speed of 1 mm/s. It is ideal to prevent cylinders from popping out, to push fragile workpieces slowly and to control pushing pressure.

COMPACT CYLINDER SSD2 Series

CKD

Series variation

Compact cylinder SSD2 Series

●: Standard ○ : Available △: Consult CKD ▒ : Not available

Variation	Model No.	Bore size (mm)	Standard stroke (mm) 5	10	15	20	25	30	35	40	45	50	70	75	100	125	150	175	200	250	300	Min. stroke (mm)	Max. stroke (mm)	Custom stroke (mm)	Option: Rod end male thread N	Option: Copper and PTFE free P6	Option: Unit for custom stroke S	Mounting bracket: Foot LB	Mounting bracket: Clevis bracket CB	Mounting bracket: Rod side flange FA	Mounting bracket: Head side flange FB	Switch	Page
Double acting/ single rod with switch	SSD2 SSD2-L SSD2 Large bore size	ø12/ø16	●	●	●	●	●	●														1	30	1	○	●	○	○	○	○	○	Avail.	752
		ø20/ø25	●	●	●	●	●	●	●	●	●	●											50										
		ø32/ø40	●	●	●	●	●	●	●	●	●	●		●	●								100										
		ø50/ø63/ø80/ø100		●	●	●	●	●	●	●	●	●		●	●											○ Note							
		ø125/ø140/ø160/ø180/ø200		●		●		●		●		●		●	●	●	●	●	●	●	●		300		○		●						768
Double acting/ single rod/high load with switch	SSD2-K SSD2-KL	ø12/ø16	●	●	●	●	●	●														1	30	1	○	●	○	○	○	○	○	Avail.	776
		ø20/ø25	●	●	●	●	●	●	●	●	●	●											50										
		ø32/ø40	●	●	●	●	●	●	●	●	●	●		●	●								100			○							
		ø50/ø63/ø80/ø100		●	●	●	●	●	●	●	●	●		●	●																		
Double acting/ single rod/long stroke with switch	SSD2 SSD2-L	ø12/ø16							●	●	●	●		●	●							31	100	1	○	●		○	○	○	○	Avail.	792
		ø20												●	●	●	●	●	●			51	200										
		ø25												●	●	●	●	●	●	●	●		300			○							
		ø32/ø40/ø50/ø63/ø80/ø100														●	●	●	●	●	●	101											
Single acting/push with switch	SSD2-X SSD2-XL	ø12/ø16/ø20/ø25/ø32/ø40	●	●																		5	10	-	○	●		○	○	○	○	Avail.	802
		ø50		●		●																	20										
Single acting/pull with switch	SSD2-Y SSD2-YL	ø12/ø16/ø20/ø25/ø32/ø40	●	●																		5	10	-	○	●		○	○	○	○	Avail.	802
		ø50		●		●																	20										
Double acting/ heat resistant	SSD2-T1	ø12/ø16	●	●	●	●	●	●														1	30	1	○			○	○	○	○		820
		ø20/ø25	●	●	●	●	●	●	●	●	●	●											50										
		ø32/ø40	●	●	●	●	●	●	●	●	●	●		●	●								100										
		ø50/ø63/ø80/ø100		●	●	●	●	●	●	●	●	●		●	●																		
Double acting/with heat resistant cylinder switch	SSD2-T1L	ø16		●	●	●	●	●														1	30	1	○			○	○	○	○	Avail.	824
		ø20/ø25			●	●	●	●	●	●	●	●											50										
		ø32/ø40			●	●	●	●	●	●	●	●	●		●								100										
		ø50/ø63			●	●	●	●	●	●	●	●	●		●																		
Double acting/high load/rubber-air cushioned with switch	SSD2-K-*C SSD2-KL-*C	ø20/ø25	●	●	●	●	●	●	●	●	●	●										5	50	1	○			○	○	○	○	Avail.	832
		ø32/ø40	●	●	●	●	●	●	●	●	●	●		●	●								100										
		ø50/ø63/ø80/ø100		●	●	●	●	●	●	●	●	●		●	●							10											
Double acting/position locking/switch	SSD2-Q SSD2-QL	ø20·ø25/ø32/ø40/ø50/ø63		●	●	●	●					●		●	●							10	100	-	○			○	○	○	○	Avail.	840
		ø80/ø100					●					●		●	●							25											
Double acting/fine speed with switch	SSD2-F SSD2-LF SSD2-KF SSD2-KLF	ø12/ø16	●	●	●	●	●	●														1	30	1	○			○	○	○	○	Avail.	854
		ø20/ø25	●	●	●	●	●	●	●	●	●	●											50										
		ø32/ø40	●	●	●	●	●	●	●	●	●	●		●	●								100										
		ø50/ø63/ø80/ø100		●	●	●	●	●	●	●	●	●		●	●																		
Double acting/low speed with switch	SSD2-O SSD2-OL	ø12/ø16	●	●	●	●	●	●														1	30	1	○			○	○	○	○	Avail.	858
		ø20/ø25	●	●	●	●	●	●	●	●	●	●											50										
		ø32/ø40	●	●	●	●	●	●	●	●	●	●		●	●								100										
		ø50/ø63/ø80/ø100		●	●	●	●	●	●	●	●	●		●	●																		
Double acting/ high load/low friction with switch	SSD2-KU SSD2-KUL	ø20/ø25	●	●	●	●	●	●	●	●	●	●										5	50	1	○			○	○	○	○	Avail.	864
		ø32/ø40	●	●	●	●	●	●	●	●	●	●		●	●								100										
		ø50/ø63/ø80/ø100		●	●	●	●	●	●	●	●	●		●	●																		

●: Standard ○ : Available △: Consult CKD ▒ : Not available

Variation	Model No.	Bore size (mm)	Standard stroke (mm) 5	10	15	20	25	30	35	40	45	50	70	75	100	125	150	175	200	250	300	Min. stroke (mm)	Max. stroke (mm)	Custom stroke (mm)	Option: Rod end male thread N	Option: Copper and PTFE free P6	Mounting bracket: Foot LB	Clevis bracket CB	Rod side flange FA	Head side flange FB	Switch	Page
Double acting/ double rod with switch	SSD2-D SSD2-DL SSD2-D Large bore size	ø12/ø16	●	●	●	●	●	●														5	30	5	○	●	○		○		Avail.	868
		ø20/ø25	●	●	●	●	●	●	●	●	●	●											50									
		ø32/ø40	●	●	●	●	●	●	●	●	●	●		●	●								100									
		ø50/ø63/ø80/ø100		●	●	●	●	●	●	●	●	●		●	●							10				○ Note						
		ø125/ø140/ø160/ø180/ø200		●		●		●		●		●		●	●	●	●	●	●	●	●	10	300	1	○							882
Double acting/ back to back with switch	SSD2-B SSD2-BL	ø12/ø16	●	●	●	●	●	●														1	30	1	○						Avail.	890
		ø20/ø25	●	●	●	●	●	●	●	●	●	●											50									
		ø32/ø40	●	●	●	●	●	●	●	●	●	●		●	●								100									
		ø50/ø63/ø80/ø100		●	●	●	●	●	●	●	●	●		●	●																	
Double acting/2-stage with switch	SSD2-W SSD2-WL	ø12/ø16	●	●	●	●	●	●														1	30	1	○						Avail.	902
		ø20/ø25/ø32/ø40	●	●	●	●	●	●	●	●	●	●											50									
		ø50/ø63/ø80/ø100		●	●	●	●	●	●	●	●	●																				
Double acting/ rotation-stop with switch	SSD2-M SSD2-ML	ø12/ø16	●	●	●	●	●	●														1	30	1	○	●	○	○	○	○	Avail.	910
		ø20/ø25	●	●	●	●	●	●	●	●	●	●											50									
		ø32/ø40	●	●	●	●	●	●	●	●	●	●		●	●								100									
		ø50/ø63		●	●	●	●	●	●	●	●	●		●	●																	
Double acting/ double rod/ rotation-stop with switch	SSD2-DM SSD2-DML	ø12/ø16	●	●	●	●	●	●														5	30	-	○		○		○		Avail.	924
		ø20/ø25	●	●	●	●	●	●	●	●	●	●											50									
		ø32/ø40	●	●	●	●	●	●	●	●	●	●		●	●								100	5								
		ø50/ø63		●	●	●	●	●	●	●	●	●		●	●							10										
Double acting/ rubber scraper with switch	SSD2-G SSD2-GL	ø20/ø25	●	●	●	●	●	●	●	●	●	●										1	50	1	○		△	△	△	△	Avail.	936
		ø32/ø40	●	●	●	●	●	●	●	●	●	●		●	●								100									
		ø50/ø63/ø80/ø100		●	●	●	●	●	●	●	●	●		●	●																	
Double acting/ coolant proof with switch	SSD2-G2, G3 SSD2-G2L, G3L	ø16	●	●	●	●	●	●														1	30	1	○		△	△	△	△	Avail.	946
		ø20/ø25	●	●	●	●	●	●	●	●	●	●											50									
		ø32/ø40	●	●	●	●	●	●	●	●	●	●		●	●								100									
		ø50/ø63/ø80/ø100		●	●	●	●	●	●	●	●	●		●	●																	
Double acting/ high load/ coolant proof with switch	SSD2-KG2, G3 SSD2-KG2L, KG3L	ø16	●	●	●	●	●	●														1	30	1	○		△	△	△	△	Avail.	956
		ø20/ø25	●	●	●	●	●	●	●	●	●	●											50									
		ø32/ø40	●	●	●	●	●	●	●	●	●	●		●	●								100									
		ø50/ø63/ø80/ø100		●	●	●	●	●	●	●	●	●		●	●																	
Double acting/ anti-spatter adherence with switch	SSD2-G1, G4 SSD2-G1L, G4L	ø25	●	●	●	●	●	●	●	●	●	●										1	50	1	○		△	△	△	△	Avail.	966
		ø32/ø40	●	●	●	●	●	●	●	●	●	●		●	●								100									
		ø50/ø63/ø80/ø100		●	●	●	●	●	●	●	●	●		●	●																	
Double acting/high load/anti-spatter adherence with switch	SSD2-KG1, KG4 SSD2-KG1L, KG4L	ø25	●	●	●	●	●	●	●	●	●	●										1	50	1	○		△	△	△	△	Avail.	974
		ø32/ø40	●	●	●	●	●	●	●	●	●	●		●	●								100									
		ø50/ø63/ø80/ø100		●	●	●	●	●	●	●	●	●		●	●																	
Double acting/double rod/anti-spatter adherence with switch	SSD2-DG1, DG4 SSD2-DG1L, DG4L	ø25	●	●	●	●	●	●	●	●	●	●										1	50	1	○		△	△	△	△	Avail.	984
		ø32/ø40	●	●	●	●	●	●	●	●	●	●		●	●								100									
		ø50/ø63/ø80/ø100		●	●	●	●	●	●	●	●	●		●	●																	
Double acting/ environment-resistant scraper with switch	SSD2-G5 SSD2-G5L	ø20/ø25	●	●	●	●	●	●	●	●	●	●										1	50	1	○		○	○	○	○	Avail.	992
		ø32/ø40	●	●	●	●	●	●	●	●	●	●		●	●								100									
		ø50/ø63/ø80/ø100		●	●	●	●	●	●	●	●	●		●	●																	
Double acting/high load/environment-resistant scraper/switch	SSD2-KG5 SSD2-KG5L	ø20/ø25	●	●	●	●	●	●	●	●	●	●										1	50	1	○		○	○	○	○	Avail.	1002
		ø32/ø40	●	●	●	●	●	●	●	●	●	●		●	●								100									
		ø50/ø63/ø80/ø100		●	●	●	●	●	●	●	●	●		●	●																	
Double acting/strong magnetic field proof switch	SSD2-L4	ø40/ø50/ø63/ø80/ø100				●	●	●	●	●	●	●		●	●							20	100	1	○		○	○	○	○	Avail.	1012
Double acting/strong magnetic field proof switch/coil scraper	SSD2-G1L4	ø40/ø50/ø63/ø80/ø100				●	●	●	●	●	●	●		●	●							20	100	1	○		○	○	○	○	Avail.	1018
Double acting/high load/ strong magnetic field proof switch	SSD2-KL4	ø40/ø50/ø63/ø80/ø100				●	●	●	●	●	●	●		●	●							20	100	1	○		○	○	○	○	Avail.	1024
Double acting/high load/strong magnetic field proof switch/coil scraper	SSD2-KG1L4	ø40/ø50/ø63/ø80/ø100				●	●	●	●	●	●	●		●	●							20	100	1	○		○	○	○	○	Avail.	1030
Double acting/ clean-room specifications with switch	SSD2-P7, P5 SSD2-L-P7, P5	ø12/ø16	●	●	●	●	●	●														1	30	1	○						Avail.	1036
		ø20/ø25	●	●	●	●	●	●	●	●	●	●											50									
		ø32/ø40	●	●	●	●	●	●	●	●	●	●		●	●								100									
		ø50/ø63/ø80/ø100		●	●	●	●	●	●	●	●	●		●	●																	
		ø125/ø140/ø160		●		●		●		●		●		●	●	●	●	●	●	●	●		300									

Note: ø50 is copper and PTFE free as standard.

Variation and option combination selection table

SSD2 (ø100 or less)

●: Standard ◎: Option ○: Available (made-to-order product) △: Available depending on conditions (Consult with CKD) x: Not available

Category		Category	Variation									
			Double acting basic	High load	Single acting push	Single acting pull	Double acting double rod	Back to back	Two-stage	With position locking	Rotation-stop	Heat resistant 150°C
		Code	None	K	X	Y	D	B	W	Q	M	T1
Variation	Double acting basic	Blank										
	High load	K			x	x	△	○	△	△	○	x
	Single acting push	X				x	△	○	x	x	△	x
	Single acting pull	Y					△	○	x	x	△	x
	Double acting double rod	D						x	x	△	○	○
	Back to back	B							x	○	○	○
	Two-stage	W								x	○	○
	With position locking	Q									△	x
	Rotation-stop	M										x
	Heat resistant (150 °C)	T1										
	Low speed	O										
	Low friction	KU										
	With rubber scraper	G										
	With metal scraper	G1										
	With coolant proof scraper (for general use)	G2										
	With coolant proof scraper (for chlorine fluid)	G3										
	Anti-spatter adherence	G4										
	With cylinder switch	L										
	With cylinder switch (for strong magnetic field proof)	L4										
	With cylinder switch (for heat resistance)	T1L										
	Fine speed	F										
Piping	NPT(ø32 to ø100)	N										
	G(ø32 to ø100)	G										
Option	Piston rod material stainless steel (including C-ring)	M										
	Piston rod end male thread	N										
	Clean-room specifications/copper and PTFE free (exhaust port)	P5										
	Clean-room specifications/copper and PTFE free (vacuum treatment)	P51										
	Copper and PTFE free	P6										
	Clean-room specifications (exhaust port)	P7										
	Clean-room specifications (vacuum treatment)	P71										
	Specify piston rod end form	N**										
	Specified rod nut quantity (male thread only)	A()										
Accessory	Cylinder switch	Listed separately	◎	◎	◎	◎	◎	◎	◎	◎	◎	x
	Rod eye (male thread only)	I	◎	◎	◎	◎	◎	◎	◎	◎	◎	◎
	Rod clevis (male thread only)	Y	◎	◎	◎	◎	◎	◎	◎	◎	◎	◎
	Mounting bracket LB with bolt	LB	◎	◎	◎	◎	◎	△	△	◎	◎	◎
	Mounting bracket CB with bolt/pin	CB	◎	◎	◎	◎	x	x	△	◎	◎	◎
	Mounting bracket FA with bolt	FA	◎	◎	◎	◎	◎	△	△	◎	◎	◎
	Mounting bracket FB with bolt	FB	◎	◎	◎	◎	x	x	△	◎	◎	◎
	Mounting bolt	Listed separately	◎	◎	◎	◎	◎	x	x	◎	◎	◎

Caution
*1. Only ø12 to ø25 are P6 as standard. ø32 to ø63 are not available.
*2. When “G2” or “G3” is selected, the material for the piston rod and C-ring is stainless steel. M code is not required.
*3. Piston rod and C-ring of female thread of “P5”, “P51”, “P7” and “P71” are stainless steel. M code is not required. For stainless steel male thread rod nut, combination with M is required.
*4. P6 specifications even without code.

	Variation											Port thread			Option								
	Low speed	Low friction	Rubber scraper	Metal scraper	Coolant proof scraper	Coolant proof scraper	Anti-spatter adherence	With switch	Strong magnetic field proof with switch	Heat resistant with switch	Fine speed	NPT	G		Stainless steel PR	Male thread PR end	Clean-room specifications (exhaust port)	Clean-room specifications (vacuum treatment)	Copper and PTFE free	Clean-room specifications (exhaust port)	Clean-room specifications (vacuum treatment)	Specified PR end	Specified rod nut quantity
	O	KU	G	G1	G2	G3	G4	L	L4	T1L	F	N	G		M	N	P5	P51	P6	P7	P71	N*	A()
												○	○		◎	◎	○	○	*7	◎	◎	○	○
	○		○	○	○	○	○	○	○	x	○	○	○		◎	◎	△	△	*6	△	△	○	○
	x	x	△	△	△	△	△	◎	○	x	x	○	○		◎	◎	x	x	*4	x	x	○	○
	x	x	△	△	△	△	△	◎	○	x	x	○	○		◎	◎	x	x	*4	x	x	△	○
	○	x	○	○	○	○	○	◎	○	○	○	○	○		◎	◎	○	○	*7	○	○	○	○
	○	○	○	○	○	○	○	◎	○	○	○	○	○		◎	◎	○	○	○	○	○	○	○
	○	x	△	△	△	△	△	◎	○	○	○	○	○		◎	◎	△	△	*8	△	△	○	○
	△	x	△	△	△	△	△	◎	○	△	△	○	○		△	◎	△	△	*8	△	△	○	○
	○	x	x	x	x	x	x	◎	○	x	○	○	○		◎	◎	△	△	*1	△	△	○	○
	x	x	x	○	x	x	x	x	x	x	x	○	○		◎	◎	x	x	x	△	△	○	○
		x	x	x	x	x	x	◎	○	x	x	○	○		◎	◎	x	x	x	○	○	○	○
			x	x	x	x	x	◎	◎	x	x	○	○		○	◎	x	x	x	x	x	○	○
				x	x	x	x	○	○	x	x	○	○		○	○	x	x	○	x	x	○	○
					x	x	x	◎	○	○	x	○	○		○	○	x	x	x	x	x	○	○
						x	x	◎	x	x	x	○	○		*2	◎	x	x	○	x	x	○	○
							x	◎	x	x	x	○	○		*2	◎	x	x	○	x	x	○	○
								○	○	x	x	○	○		○	○	x	x	x	x	x	○	○
									x	x	◎	○	○		◎	◎	○	○	◎	◎	◎	○	○
										x	○	○	○		○	◎	○	○	○	○	○	○	○
											x	○	○		○	◎	x	x	x	△	△	○	○
												○	○		○	◎	x	x	x	○	○	○	○
													x		○	○	○	○	○	○	○	○	○
															○	○	○	○	○	○	○	○	○
																◎	*3	*3	○	*3	*3	○	○
																	○	○	◎	◎	◎	○	○
																		x	*5	*5	x	○	○
																			*5	x	*5	○	○
																				*5	*5	○	○
																					x	○	○
																						○	○
																							○
	◎		◎	◎	◎	◎	◎	◎	◎	◎	◎	○	○		◎	◎	○	○	◎	◎	◎	○	○
	◎		◎	◎	△	△	◎	◎	◎	◎	◎	○	○		△	◎	x	x	◎	x	x	△	○
	◎		◎	◎	△	△	◎	◎	◎	◎	◎	○	○		△	◎	x	x	◎	x	x	△	○
	◎		△	△	△	△	△	◎	◎	◎	◎	○	○		△	◎	△	△	◎	△	△	○	○
	◎		◎	◎	◎	◎	◎	◎	◎	◎	◎	○	○		△	◎	x	x	◎	x	x	○	○
	◎		△	△	△	△	△	◎	◎	◎	◎	○	○		△	◎	△	△	◎	△	△	○	○
	◎		◎	◎	◎	◎	◎	◎	◎	◎	◎	○	○		△	◎	△	△	◎	△	△	○	○
	◎		◎	◎	△	△	◎	◎	◎	◎	◎	○	○		△	◎	△	△	◎	△	△	○	○

*5. "P5" and "P51" (clean-room specifications/copper and PTFE free) have properties of both "P6" (copper and PTFE free) and "P7", "P71" (clean-room specifications).
*6. P6 is standard for ø12 and ø16 and optional for ø25 to ø100.
*7. P6 is standard for ø12 to ø50 and optional for ø63 to ø100.
*8. P6 is standard for ø12 to ø50 and available as made to order for ø63 to ø100.

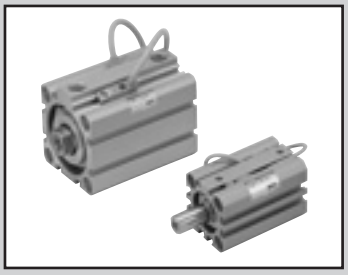

Compact cylinder double acting/single rod

SSD2 Series

● Bore size: ø12/ø16/ø20/ø25/ø32/ø40/ø50/ø63/ø80/ø100

JIS symbol 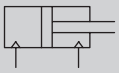

RoHS CAD

Specifications

Item		SSD2 SSD2-L (with switch)									
Bore size mm		ø12	ø16	ø20	ø25	ø32	ø40	ø50	ø63	ø80	ø100
Actuation		Double acting									
Working fluid		Compressed air									
Max. working pressure MPa		1.0									
Min. working pressure MPa		0.1							0.05		
Proof pressure MPa		1.6									
Ambient temperature °C		-10 to 60 (no freezing)									
Port size		M5				Rc1/8 *1		Rc1/4		Rc3/8	
Stroke tolerance mm	With rubber cushion	$^{+2.0}_{0}$									
	Without cushion	$^{+1.0}_{0}$									
Working piston speed mm/s		50 to 500							50 to 300		
Cushion		With or without cushion can be selected									
Lubrication		Not required (use turbine oil class 1 ISO VG32 if lubrication is necessary)									
Allowable absorbed Energy J	With rubber cushion	0.03	0.05	0.10	0.16	0.16	0.44	0.75	0.78	2.51	3.92
	Without cushion	0.004	0.01	0.016	0.021	0.025	0.092	0.1	0.12	0.27	0.56

*1: The ø32 bore size with a 5 mm stroke and without a switch has a port size of M5.

Stroke

Bore size (mm)	Standard stroke (mm)	Max. stroke (mm)	Min. stroke (mm)
ø12	5/10/15/20 25/30	30	1
ø16			
ø20	5/10/15/20/25 30/35/40/45/50	50	
ø25			
ø32	5/10/15/20/25/30/ 35/40/45/50/75/100	100	
ø40			
ø50	10/15/20/25 30/35/40/45/50 75/100		
ø63			
ø80			
ø100			

*1: When using the type with switch, refer to the table of the min. stroke with switch.

***2: If the stroke exceeds the max. stroke, refer to the long stroke on page 792.**

***3: Refer to pages 763 and 765 for the min. stroke with mounting bracket LB.**

Min. stroke with switch (With 2 switches)

Bore size (mm)	T0H/V / T5H/V	T2H/V / T3H/V
ø12	10 (5)	5
ø16		
ø20	5	
ø25		
ø32		
ø40		
ø50		
ø63		
ø80		
ø100		

1: Less than 10mm stroke of 2-color LED, off-delay, AC magnetic field proof with T1, T8* switches are not available.

*2: Values in ( ) are for the type with 1 on rod side.

Custom stroke

● SSD2 Series

Item	Standard product		Optional products	
	Standard stroke body with spacer		Dedicated unit (-S)	
Model No.	Refer to How to order.		Add "-S" option code to the model No.	
Description	A spacer is added to the standard stroke body to adjust the stroke in 1 mm increments.		Dedicated units of the required stroke are available.	
Stroke range	Bore size	Stroke range	Bore size	Stroke range
	12/16	1 to 29	12, 16	6 to 29
	20 to 25	1 to 49	20, 25	6 to 49
	32 to 100	1 to 99	32 to 100	11 to 99
Example of model No.	Model No.: SSD2-32-38 A +2 mm spacer is added to the SSD2-32-40 standard cylinder to create 38 mm stroke. B + stroke is 63 mm.		Model No.: SSD2-32-41-S Dedicated units for 41 mm stroke are available. B + stroke is 64 mm.	

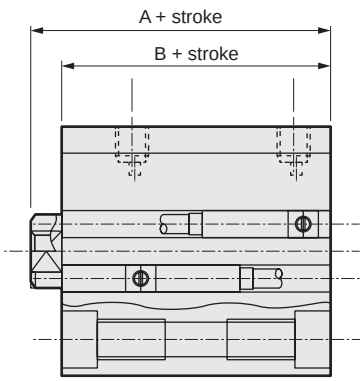

Switch specifications (F-switch)

● 1-color/2-color LED

Item	2-wire proximity	3-wire proximity	2-wire proximity		3-wire proximity		
	F2S	F3S	F2H/F2V	F2YH/F2YV	F3H/F3V	F3PH/F3PV (made to order)	F3YH/F3YV
Applications	Dedicated for programmable controller	For programmable controller, relay	Dedicated for programmable controller		For programmable controller, relay		
Output method	-	NPN output	-		NPN output	PNP output	NPN output
Power supply voltage	-	10 to 28 VDC	-		10 to 28 VDC	4.5 to 28 VDC	10 to 28 VDC
Load voltage	10 to 30 VDC	30 VDC or less	10 to 30 VDC	24 VDC ±10%	30 VDC or less		
Load current	5 to 20 mA	50 mA or less	5 to 20 mA		50 mA or less		
Indicator	LED (Lit when ON)		Yellow LED (Lit when ON)	Red/green LED (Lit when ON)	Yellow LED (Lit when ON)		Red/green LED (Lit when ON)
Leakage current	1mA or less	10 μA or less	1 mA or less		10 μA or less		
Weight g	1 m:10 3 m:29						

Switch specifications (T-switch)

● 1-color/2-color LED/for AC magnetic field proof

Item	2-wire proximity	2-wire proximity			3-wire proximity				2-wire reed							2-wire proximity
	T1H/T1V	T2H/T2V/ T2JH/T2JV	T2YH/ T2YV	T2WH/ T2WV	T3H/ T3V	T3PH/ T3PV	T3YH/ T3YV	T3WH/ T3WV	T0H/T0V		T5H/T5V		T8H/T8V			T2YD(*4) T2YDT
Applications	For programmable controller, relay, compact solenoid valve	Dedicated for programmable controller			For programmable controller, relay				For programmable controller, relay		For programmable controller, relay, IC circuit (no indicator lamp), serial connection		For programmable controller, relay			For programmable controller
Output method	-				NPN output	PNP output	NPN output	NPN output	-							
Pwr. supp. V.	-				10 to 28 VDC				-							
Load voltage	85 to 265 VAC	10 to 30 VDC		24 VDC ±10%	30 VDC or less				12/24 VDC	100/110 VAC	5/12/24 VDC	100/110 VAC	12/24 VDC	110 VAC	220 VAC	24 VDC ±10%
Load current	5 to 100 mA	5 to 20 mA (*3)			100mA or less		50mA or less		5 to 50 mA	7 to 20 mA	50 mA or less	20 mA or less	5 to 50 mA	7 to 20 mA	7 to 10 mA	5 to 20 mA
Indicator	LED (Lit when ON)	LED (Lit when ON)	Red/green LED (Lit when ON)	Red/green LED (Lit when ON)	LED (Lit when ON)	Yellow LED (Lit when ON)	Red/green LED (Lit when ON)	Red/green LED (Lit when ON)	LED (Lit when ON)		No indicator lamp		LED (Lit when ON)			Red/green LED (Lit when ON)
Leakage current	≤ 1 mA at 100 VAC, ≤ 2 mA at 200 VAC	1 mA or less			10 μA or less				0 mA							1 mA or less
Weight g	1 m:33	1 m:18	1 m:33	1 m:18	1 m:18		1 m:33	1 m:18	1 m:18 3 m:49 5 m:80				1 m:33			1 m:61
	3 m:87	3 m:49	3 m:87	3 m:49	3 m:49		3 m:87	3 m:49					3 m:87			3 m:166
	5 m:142	5 m:80	5 m:142	5 m:80	5 m:80		5 m:142	5 m:80					5 m:142			5 m:272

*1 : Refer to Ending Page 1 for detailed switch specifications and dimensions.
*2 : Switches other than the above models, such as switches with connectors, are also available. Refer to Ending Page 1.
*3 : The max. load current is 20 mA at 25°C. The current is lower than 20 mA if the operating ambient temperature around the switch is higher than 25°C. (5 to 10 mA at 60°C)
*4 : Switch for AC magnetic field (T2YD/T2YDT) cannot be used in DC magnetic field.
*5 : The F-switch uses a bend-resistant lead wire.

Cylinder weight table (the weight of the switches is when there are 2 cylinder switches.)

(Unit: g)

Stroke (mm)	5		10		15		20		25		30		35		40		45		50		75		100	
Bore size (mm)	No switch	Switch	No switch	Switch	No switch	Switch	No switch	Switch	No switch	Switch	No switch	Switch	No switch	Switch	No switch	Switch	No switch	Switch	No switch	Switch	No switch	Switch	No switch	Switch
ø12	36	86	44	86	53	95	61	103	70	112	72	114	-	-	-	-	-	-	-	-	-	-	-	-
ø16	48	104	59	104	69	114	80	125	91	136	102	147	-	-	-	-	-	-	-	-	-	-	-	-
ø20	63	118	75	150	88	163	101	176	113	188	126	201	139	214	152	227	165	240	203	278	-	-	-	-
ø25	87	178	102	193	118	209	134	225	150	241	165	256	181	272	197	288	213	304	228	319	-	-	-	-
ø32	122	236	144	258	166	280	188	302	209	323	231	345	253	367	275	389	297	411	318	432	494	542	604	652
ø40	183	326	210	353	236	379	263	406	290	433	316	459	342	485	369	512	395	538	472	565	646	695	776	825
ø50	-	-	341	535	383	577	425	619	467	661	510	704	552	746	594	788	636	830	678	872	1025	1082	1235	1292
ø63	-	-	507	786	562	841	617	896	672	951	727	1006	782	1061	838	1117	893	1172	948	1227	1438	1502	1713	1777
ø80	-	-	928	1341	1015	1428	1101	1514	1188	1601	1274	1687	1361	1774	1448	1861	1535	1948	1621	2034	2401	2467	2833	2899
ø100	-	-	1433	2000	1547	2114	1660	2227	1774	2341	1888	2455	2002	2569	2115	2682	2229	2796	2343	2910	3406	3478	3973	4045

Theoretical thrust table

(Unit: N)

Bore size (mm)	Operating direction	Working pressure MPa											
		0.05	0.1	0.15	0.2	0.3	0.4	0.5	0.6	0.7	0.8	0.9	1.0
ø12	Push	-	11.3	17.0	22.6	33.9	45.2	56.5	67.9	79.2	90.5	$1.02x10^2$	$1.13x10^2$
	Pull	-	8.48	12.7	17.0	25.4	33.9	42.4	50.9	59.4	67.9	76.3	84.8
ø16	Push	-	20.1	30.2	40.2	60.3	80.4	$1.01x10^2$	$1.21x10^2$	$1.41x10^2$	$1.61x10^2$	$1.81x10^2$	$2.01x10^2$
	Pull	-	15.1	22.6	30.2	45.2	60.3	75.4	90.5	$1.06x10^2$	$1.21x10^2$	$1.36x10^2$	$1.51x10^2$
ø20	Push	-	31.4	47.1	62.8	94.2	$1.26x10^2$	$1.57x10^2$	$1.88x10^2$	$2.20x10^2$	$2.51x10^2$	$2.83x10^2$	$3.14x10^2$
	Pull	-	23.6	35.3	47.1	70.7	94.2	$1.18x10^2$	$1.41x10^2$	$1.65x10^2$	$1.88x10^2$	$2.12x10^2$	$2.36x10^2$
ø25	Push	-	49.1	73.6	98.2	$1.47x10^2$	$1.96x10^2$	$2.45x10^2$	$2.95x10^2$	$3.44x10^2$	$3.93x10^2$	$4.42x10^2$	$4.91x10^2$
	Pull	-	37.8	56.7	75.6	$1.13x10^2$	$1.51x10^2$	$1.89x10^2$	$2.27x10^2$	$2.64x10^2$	$3.02x10^2$	$3.40x10^2$	$3.78x10^2$
ø32	Push	-	80.4	$1.21x10^2$	$1.61x10^2$	$2.41x10^2$	$3.22x10^2$	$4.02x10^2$	$4.83x10^2$	$5.63x10^2$	$6.43x10^2$	$7.24x10^2$	$8.04x10^2$
	Pull	-	60.3	90.5	$1.21x10^2$	$1.81x10^2$	$2.41x10^2$	$3.02x10^2$	$3.62x10^2$	$4.22x10^2$	$4.83x10^2$	$5.43x10^2$	$6.03x10^2$
ø40	Push	-	$1.26x10^2$	$1.88x10^2$	$2.51x10^2$	$3.77x10^2$	$5.03x10^2$	$6.28x10^2$	$7.54x10^2$	$8.80x10^2$	$1.01x10^3$	$1.13x10^3$	$1.26x10^3$
	Pull	-	$1.06x10^2$	$1.58x10^2$	$2.11x10^2$	$3.17x10^2$	$4.22x10^2$	$5.28x10^2$	$6.33x10^2$	$7.39x10^2$	$8.44x10^2$	$9.50x10^2$	$1.06x10^3$
ø50	Push	-	$1.96x10^2$	$2.95x10^2$	$3.93x10^2$	$5.89x10^2$	$7.85x10^2$	$9.82x10^2$	$1.18x10^3$	$1.37x10^3$	$1.57x10^3$	$1.77x10^3$	$1.96x10^3$
	Pull	-	$1.65x10^2$	$2.47x10^2$	$3.30x10^2$	$4.95x10^2$	$6.60x10^2$	$8.25x10^2$	$9.90x10^2$	$1.15x10^3$	$1.32x10^3$	$1.48x10^3$	$1.65x10^3$
ø63	Push	$1.56x10^2$	$3.12x10^2$	$4.68x10^2$	$6.23x10^2$	$9.35x10^2$	$1.25x10^3$	$1.56x10^3$	$1.87x10^3$	$2.18x10^3$	$2.49x10^3$	$2.81x10^3$	$3.12x10^3$
	Pull	$1.40x10^2$	$2.80x10^2$	$4.20x10^2$	$5.61x10^2$	$8.41x10^2$	$1.12x10^3$	$1.40x10^3$	$1.68x10^3$	$1.96x10^3$	$2.24x10^3$	$2.52x10^3$	$2.80x10^3$
ø80	Push	$2.51x10^2$	$5.03x10^2$	$7.54x10^2$	$1.01x10^3$	$1.51x10^3$	$2.01x10^3$	$2.51x10^3$	$3.02x10^3$	$3.52x10^3$	$4.02x10^3$	$4.52x10^3$	$5.03x10^3$
	Pull	$2.27x10^2$	$4.54x10^2$	$6.80x10^2$	$9.07x10^2$	$1.36x10^3$	$1.81x10^3$	$2.27x10^3$	$2.72x10^3$	$3.17x10^3$	$3.63x10^3$	$4.08x10^3$	$4.54x10^3$
ø100	Push	$3.93x10^2$	$7.85x10^2$	$1.18x10^3$	$1.57x10^3$	$2.36x10^3$	$3.14x10^3$	$3.93x10^3$	$4.71x10^3$	$5.50x10^3$	$6.28x10^3$	$7.07x10^3$	$7.85x10^3$
	Pull	$3.57x10^2$	$7.15x10^2$	$1.07x10^3$	$1.43x10^3$	$2.14x10^3$	$2.86x10^3$	$3.57x10^3$	$4.29x10^3$	$5.00x10^3$	$5.72x10^3$	$6.43x10^3$	$7.15x10^3$

How to order

No switch (without magnet for switch)

SSD2 - 12 ○ ○ - 5 ——— N - LB - I

With switch (built-in magnet for switch)

SSD2-L - 12 ○ ○ - 10 - T0H - R - N - LB - I

- Ⓐ Model No.
- Ⓑ Bore size
- Ⓒ Port thread
- Ⓓ Cushion
- Ⓔ Stroke
- Ⓕ Switch model No. *1 *2 *3 *8 *9
- Ⓖ Switch quantity
- Ⓗ Option *4
- Ⓘ Mounting bracket *5 *6
- Ⓙ Accessory *7

Code	Description
Ⓐ Model No.	
SSD2	Double acting/single rod
SSD2-L	Double acting/single rod/with switch
Ⓑ Bore size (mm)	
12	ø12
16	ø16
20	ø20
25	ø25
32	ø32
40	ø40
50	ø50
63	ø63
80	ø80
100	ø100
Ⓒ Port thread	
Blank	Rc thread
NN	NPT thread (ø32 and over) (made-to-order product)
GN	G thread (ø32 and over) (made-to-order product)
Ⓓ Cushion	
Blank	Without cushion
D	With rubber cushion
Ⓔ Stroke (mm)	
Refer to the stroke table on the following page.	

Ⓕ Switch model No.

Axial lead wire	Radial lead wire	Contact	Voltage AC	Voltage DC	Indicator	Lead wire	Bore size 12	16	20	25	32	40	50	63	80	100
-	F2S*	Proximity		●	1-color LED	2-wire			●	●						
-	F3S*	Proximity		●	1-color LED	3-wire			●	●						
F2H*	F2V*	Proximity		●	1-color LED	2-wire			●	●						
F3H*	F3V*	Proximity		●	1-color LED	3-wire			●	●						
F3PH*	F3PV*	Proximity		●	1-color LED (PNP output) (custom)	3-wire			●	●						
F2YH*	F2YV*	Proximity		●	2-color LED	2-wire			●	●						
F3YH*	F3YV*	Proximity		●	2-color LED	3-wire			●	●						
T0H*	T0V*	Reed	●	●	1-color LED	2-wire	●	●	●	●	●	●	●	●	●	●
T5H*	T5V*	Reed	●	●	No indicator lamp	2-wire	●	●	●	●	●	●	●	●	●	●
T8H*	T8V*	Reed	●	●	1-color LED	2-wire						●	●	●	●	●
T1H*	T1V*	Proximity	●		1-color LED	2-wire			●	●	●	●	●	●	●	●
T2H*	T2V*	Proximity		●	1-color LED	2-wire	●	●	●	●	●	●	●	●	●	●
T3H*	T3V*	Proximity		●	1-color LED	3-wire	●	●	●	●	●	●	●	●	●	●
T3PH*	T3PV*	Proximity		●	1-color LED (PNP output)	3-wire	●	●	●	●	●	●	●	●	●	●
T2WH*	T2WV*	Proximity		●	2-color LED	2-wire	●	●	●	●	●	●	●	●	●	●
T2YH*	T2YV*	Proximity		●	2-color LED	2-wire			●	●	●	●	●	●	●	●
T3WH*	T3WV*	Proximity		●	2-color LED	3-wire	●	●	●	●	●	●	●	●	●	●
T3YH*	T3YV*	Proximity		●	2-color LED	3-wire			●	●	●	●	●	●	●	●
T2YD*	-	Proximity		●	2-color LED for AC magnetic field	2-wire			●	●	●	●	●	●	●	●
T2YDT*	-	Proximity		●	2-color LED for AC magnetic field	2-wire			●	●	●	●	●	●	●	●
T2JH*	T2JV*	Proximity		●	1-color LED off-delay	2-wire			●	●	●	●	●	●	●	●

* Lead wire length	
Blank	1 m (standard)
3	3 m (option)
5	5 m (option) *11

Ⓖ Switch quantity	
R	1 on rod side
H	1 on head side
D	2

Ⓗ Option

	Bore size (mm)	12	16	20	25	32	40	50	63	80	100
Blank	Rod end female thread	●	●	●	●	●	●	●	●	●	●
N	Rod end male thread	●	●	●	●	●	●	●	●	●	●
P6	Copper and PTFE free specifications	Supported as standard							●	●	●
M *4	Piston rod material (stainless steel)	●	●	●	●	●	●	●	●	●	●
S	Dedicated unit for custom stroke	●	●	●	●	●	●	●	●	●	●
P4	Specifications for rechargeable battery	●	●	●	●	●	●	●	●	●	●
P40	Specifications for rechargeable battery	●	●	●	●	●	●	●	●	●	●

Ⓘ Mounting bracket	
Blank	Without mounting bracket
LB	Axial foot
CB	Clevis bracket (pin and snap ring included)
FA	Rod side flange
FB	Head side flange

Ⓙ Accessory (available when rod end male thread "N" is selected)	
I	Rod eye
Y	Rod clevis (pin and snap ring included)

Precautions for model No. selection

1 : The T2YD switch cannot be mounted on the ø12 and ø16 bore sizes.
2 : The T8 switch cannot be mounted on the ø12 to ø32 bore sizes.
*3 : The F-switch can only be mounted on the piping port surface of bore sizes ø20 and ø25.
*4 : Piston rod of ø12 to ø25 is stainless steel as standard. C-snap ring is stainless steel instead of steel. The rod end male thread nut is stainless steel.
*5 : The mounting bracket is included at shipment.
*6 : The projection dimension of piston rod WF when LB or FA is selected is different from that of the standard. Refer to the dimensions on pages 761, 763, 765 and 766. The number of the specified protruding dimension will be added at the end of the model No. printed on the metal plate on the body.
*7 : "I" and "Y" cannot be selected together.
*8 : The F-switch with L type lead wire on ø20 models cannot be selected on strokes of 15 mm or under.
*9 : Switches are shipped with the product. Contact CKD if assembling before shipment is necessary.
*10 : Refer to pages 750 and 751 for combinations of variations/options.
*11 : F-switch cannot be selected.

[Example of model No.]

SSD2-L-12-10-T0H-R-N-LB-I

Model: Compact cylinder, standard

Ⓑ Bore size	: ø12 mm
Ⓒ Port thread	: Rc thread
Ⓓ Cushion	: No cushion
Ⓔ Stroke	: 10mm
Ⓕ Switch model No.	: Reed switch T0H, lead wire length 1 m
Ⓖ Switch quantity	: 1 on rod side
Ⓗ Option	: Rod end male thread
Ⓘ Mounting bracket	: Axial foot
Ⓙ Accessory	: Rod eye

[Stroke table]

Stroke (mm)		Applicable bore size									
		12	16	20	25	32	40	50	63	80	100
Standard stroke	5	●	●	●	●	●	●				
	10	●	●	●	●	●	●	●	●	●	●
	15	●	●	●	●	●	●	●	●	●	●
	20	●	●	●	●	●	●	●	●	●	●
	25	●	●	●	●	●	●	●	●	●	●
	30	●	●	●	●	●	●	●	●	●	●
	35			●	●	●	●	●	●	●	●
	40			●	●	●	●	●	●	●	●
	45			●	●	●	●	●	●	●	●
	50			●	●	●	●	●	●	●	●
	75					●	●	●	●	●	●
	100					●	●	●	●	●	●
Min. stroke (mm) *1		1									
Max. stroke (mm)		30		50		100					
Custom stroke *2		In 1 mm increments									

1 : Less than 5 mm for 1-color LED switch and less than 10 mm for the 2-color LED, off-delay, AC magnetic field proof, T1 or T8* switch are not available.
Refer to page 752 for the min. stroke with switch.
*2 : The total length when using a custom stroke is the same as that when using the next longer standard stroke.
*3 : Refer to pages 763 and 765 for the min. stroke with mounting bracket LB.

How to order switch

SW - T0H

Switch model No.
(Item Ⓕ on page 754)

How to order mounting bracket

Bore size (mm) / Mounting bracket	ø12	ø16	ø20	ø25	ø32	ø40	ø50
Foot (LB)	SSD2-LB-12	SSD2-LB-16	SSD2-LB-20	SSD2-LB-25	SSD2-LB-32	SSD2-LB-40	SSD2-LB-50
Flange (FA/FB)	SSD2-FA-12	SSD2-FA-16	SSD2-FA-20	SSD2-FA-25	SSD2-FA-32	SSD2-FA-40	SSD2-FA-50
Clevis bracket (CB)	SSD2-CB-12	SSD2-CB-16	SSD2-CB-20	SSD2-CB-25	SSD2-CB-32	SSD2-CB-40	SSD2-CB-50

Bore size (mm) / Mounting bracket	ø63	ø80	ø100
Foot (LB)	SSD2-LB-63	SSD2-LB-80	SSD2-LB-100
Flange (FA/FB)	SSD2-FA-63	SSD2-FA-80	SSD2-FA-100
Clevis bracket (CB)	SSD2-CB-63	SSD2-CB-80	SSD2-CB-100

*1: The foot mounting bracket is provided as 2 pcs./set.

Specifications for rechargeable battery (catalog No. CC-1226A)

● Design compatible with rechargeable battery manufacturing process

SSD2-·····-P4*

SCP*3
CMK2
CMA2
SCM
SCG
SCA2
SCS2
CKV2
CAV2/ COVP/N2
SSD2
SSG
SSD
CAT
MDC2
MVC
SMG
MSD/ MSDG
FC*
STK
SRL3
SRG3
SRM3
SRT3
MRL2
MRG2
SM-25
ShkAbs
FJ
FK
Spd Contr
Ending

Internal structure and parts list (ø12 to 50) (no cushion)

● SSD2-L-12 to 25 (double acting/with switch)

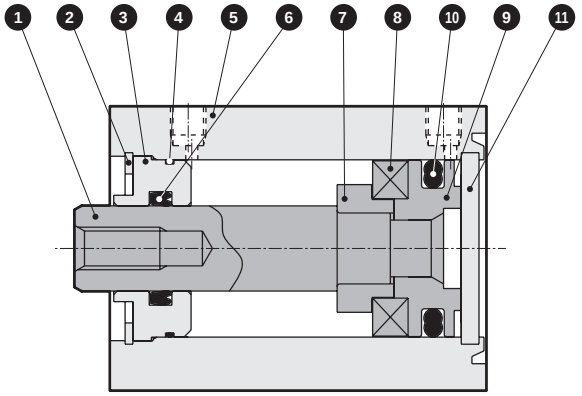

● SSD2-L-32 to 50 (double acting/with switch)

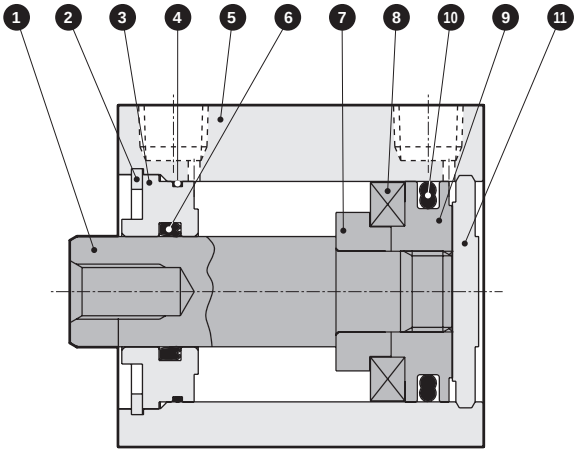

● SSD2-12 to 25 (double acting)

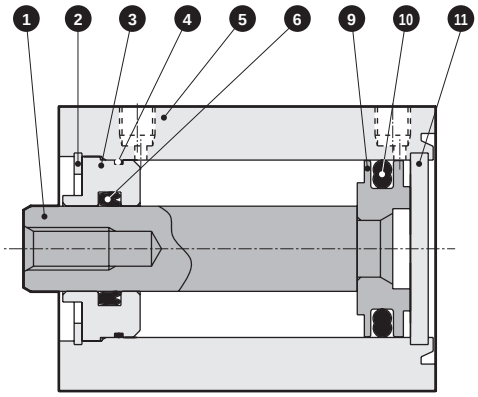

● SSD2-32 to 50 (double acting)

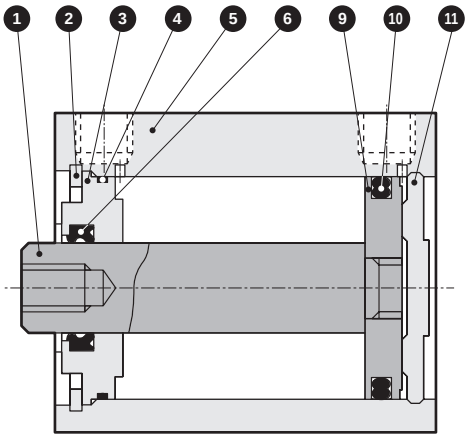

No.	Part name	Material	Remarks	No.	Part name	Material	Remarks
1	Piston rod	ø12 to ø25: Stainless steel ø32 to ø50: Steel	ø16 to ø50: Industrial chrome plating	7	Spacer	Aluminum alloy	ø12 to ø32: Chromate
2	C-snap ring	Steel	Zinc phosphate	8	Magnet	Plastic	
3	Rod metal	Special aluminum	Alumite	9	Piston	Aluminum alloy	Chromate
4	Rod metal gasket	Nitrile rubber		10	Piston packing	Nitrile rubber	
5	Body	Aluminum alloy	Hard alumite	11	Cover	ø12 to ø25: Stainless steel ø32 to ø50: Aluminum alloy	ø32 to ø50: Alumite
6	Rod packing	Nitrile rubber					

Repair parts list

Bore size (mm)	Kit No.	Repair parts No.
ø12	SSD2-12K	4 6 10
ø16	SSD2-16K	
ø20	SSD2-20K	
ø25	SSD2-25K	
ø32	SSD2-32K	
ø40	SSD2-40K	
ø50	SSD2-50K	

Internal structure and parts list (ø63 to 100) (no cushion)

● SSD2-L-63 to 100 (double acting/with switch)

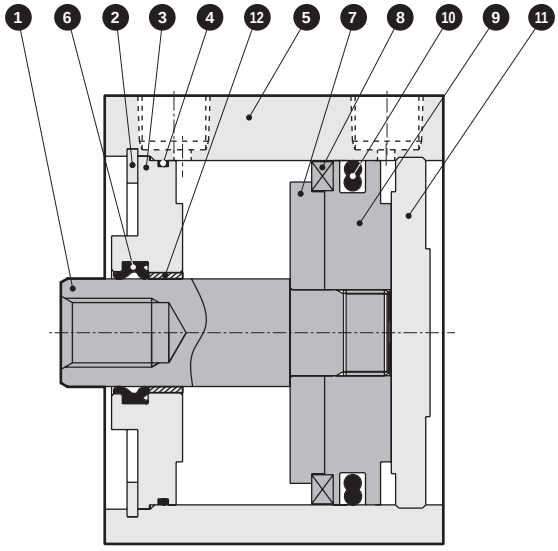

● SSD2-63 to 100 (double acting)

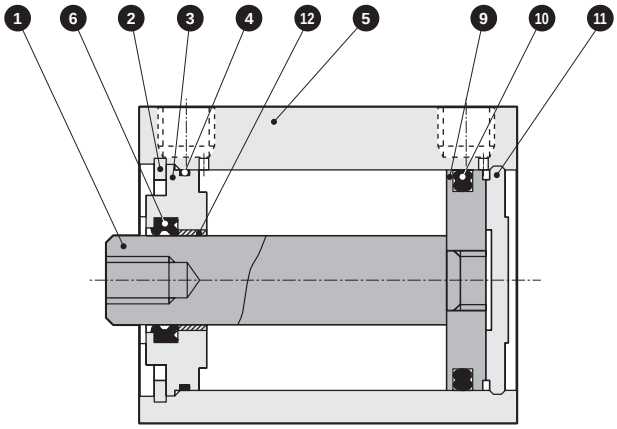

No.	Part name	Material	Remarks	No.	Part name	Material	Remarks
1	Piston rod	Steel	Industrial chrome plating	7	Spacer	Aluminum alloy	
2	C-snap ring	Steel	Zinc phosphate	8	Magnet	Plastic	
3	Rod metal	Aluminum alloy	Chromate	9	Piston	Aluminum alloy	Chromate
4	Rod metal gasket	Nitrile rubber		10	Piston packing	Nitrile rubber	
5	Body	Aluminum alloy	Hard alumite	11	Cover	Aluminum alloy	Alumite
6	Rod packing	Nitrile rubber		12	Bush	Oiles drymet	*1

*1: Material is steel for copper and PTFE free specifications.

Repair parts list

Bore size (mm)	Kit No.	Repair parts No.
ø63	SSD2-63K	4 6 10
ø80	SSD2-80K	
ø100	SSD2-100K	

SCP*3
CMK2
CMA2
SCM
SCG
SCA2
SCS2
CKV2
CAV2/COVP/N2
SSD2
SSG
SSD
CAT
MDC2
MVC
SMG
MSD/MSDG
FC*
STK
SRL3
SRG3
SRM3
SRT3
MRL2
MRG2
SM-25
ShkAbs
FJ
FK
Spd Contr
Ending

Internal structure and parts list (ø12 to 50) (with rubber cushion)

● SSD2-L-12D to 32D (double acting/with switch)

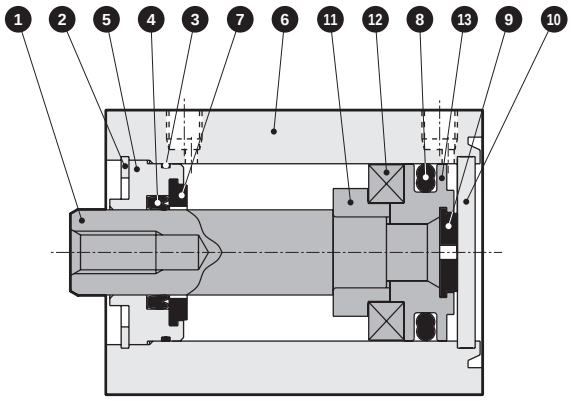

● SSD2-L-40D to 50D (double acting/with switch)

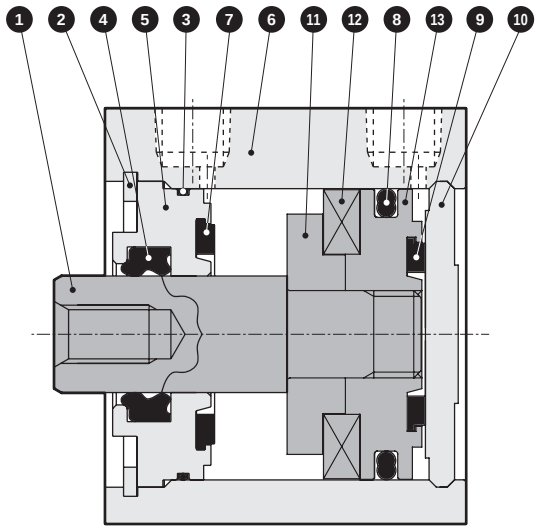

● SSD2-12D to 32D (double acting)

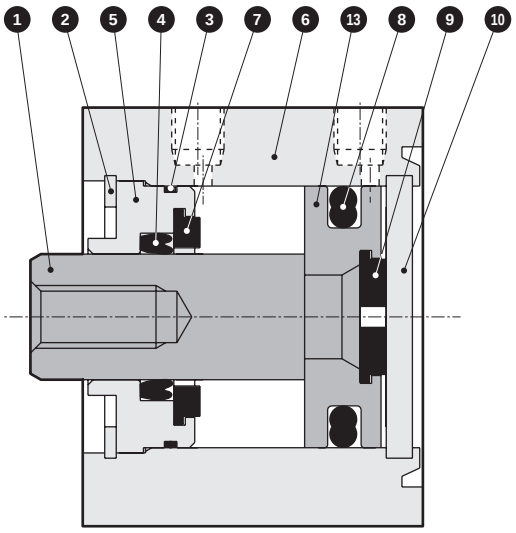

● SSD2-40D, 50D (double acting)

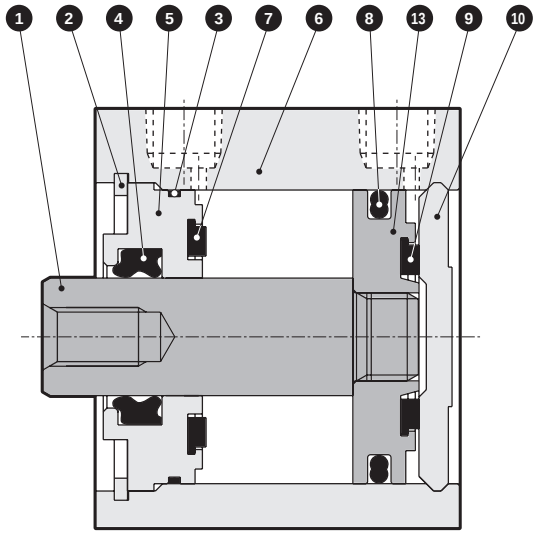

No.	Part name	Material	Remarks
1	Piston rod	ø12 to ø25: Stainless steel ø32 to ø50: Steel	ø16 to ø50: Industrial chrome plating
2	C-snap ring	Steel	Zinc phosphate
3	Rod metal gasket	Nitrile rubber	
4	Rod packing	Nitrile rubber	
5	Rod metal	Aluminum alloy	Alumite
6	Body	Aluminum alloy	Hard alumite
7	Cushion rubber (R)	Urethane rubber	

No.	Part name	Material	Remarks
8	Piston packing	Nitrile rubber	
9	Cushion rubber (H)	Urethane rubber	
10	Cover	ø12 to ø25: Stainless steel ø32 to ø50: Aluminum alloy	ø32 to ø50: Alumite
11	Spacer	Aluminum alloy	ø12 to ø32: Chromate
12	Magnet	Plastic	
13	Piston	Aluminum alloy	Chromate

Repair parts list

Bore size (mm)	Kit No.	Repair parts No.
ø12	SSD2-12DK	❸ ❹ ❼ ❽ ❾
ø16	SSD2-16DK	
ø20	SSD2-20DK	
ø25	SSD2-25DK	
ø32	SSD2-32DK	
ø40	SSD2-40DK	
ø50	SSD2-50DK	

Internal structure and parts list (ø63 to 100) (with rubber cushion)

● SSD2-L-63D to 100D (double acting/with switch)

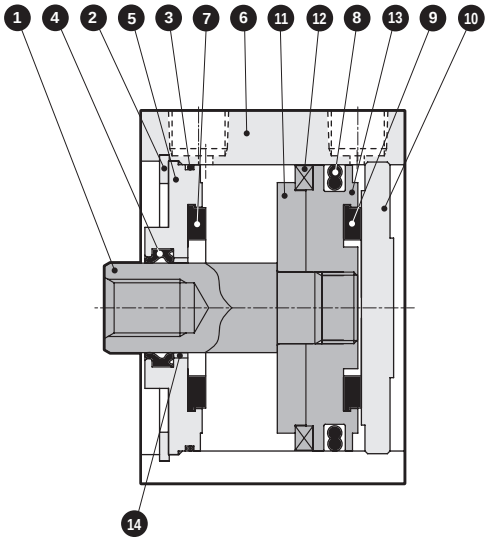

● SSD2-63D to 100D (double acting)

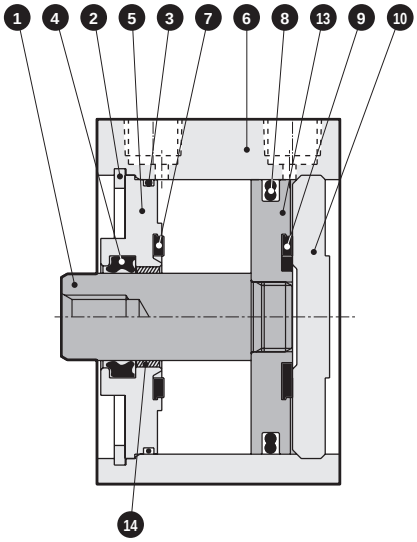

No.	Part name	Material	Remarks	No.	Part name	Material	Remarks
1	Piston rod	Steel	Industrial chrome plating	8	Piston packing	Nitrile rubber	
2	C-snap ring	Steel	Zinc phosphate	9	Cushion rubber (H)	Urethane rubber	
3	Rod metal gasket	Nitrile rubber		10	Cover	Aluminum alloy	Alumite
4	Rod packing	Nitrile rubber		11	Spacer	Aluminum alloy	
5	Rod metal	Aluminum alloy	Chromate	12	Magnet	Plastic	
6	Body	Aluminum alloy	Hard alumite	13	Piston	Aluminum alloy	Chromate
7	Cushion rubber (R)	Urethane rubber		14	Bush	Oiles drymet	

Repair parts list

Bore size (mm)	Kit No.	Repair parts No.
ø63	SSD2-63DK	3 4 7 8 9
ø80	SSD2-80DK	
ø100	SSD2-100DK	

SCP*3
CMK2
CMA2
SCM
SCG
SCA2
SCS2
CKV2
CAV2/COVP/N2
SSD2
SSG
SSD
CAT
MDC2
MVC
SMG
MSD/MSDG
FC*
STK
SRL3
SRG3
SRM3
SRT3
MRL2
MRG2
SM-25
ShkAbs
FJ
FK
Spd Contr
Ending

Dimensions CAD

● SSD2-L-12 to 25 (with switch, TOH/V, T5H/V, T2H/V, T3H/V)

ø12/ø16

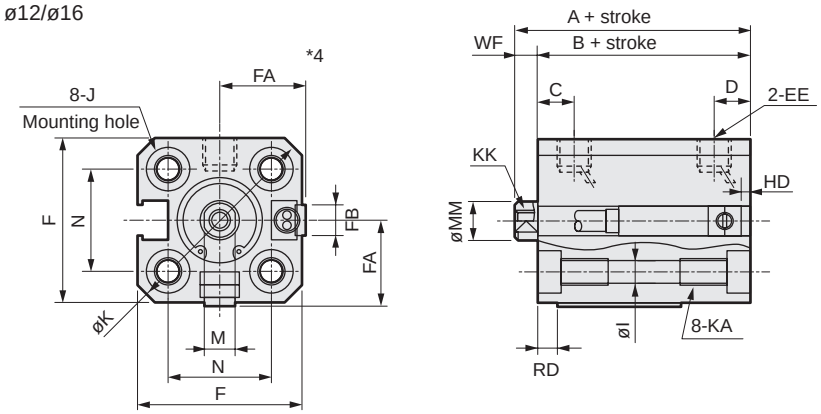

● Rod end male thread

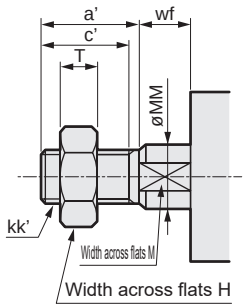

ø20/ø25

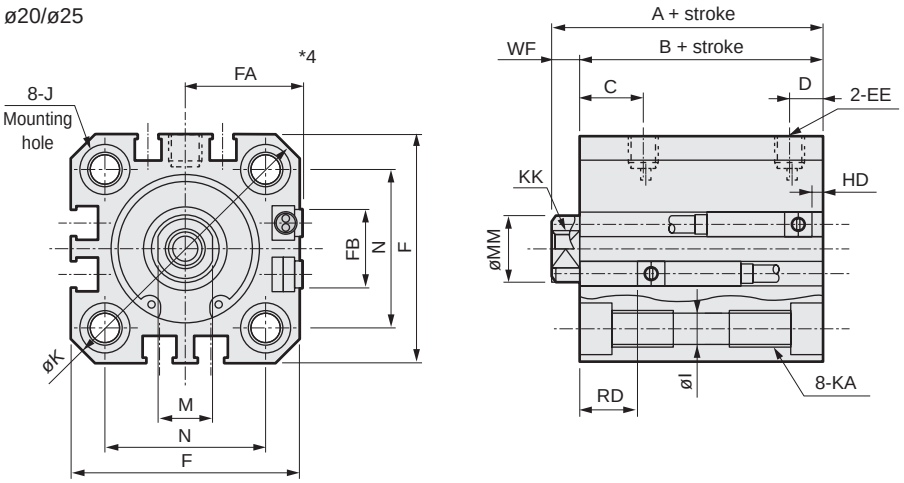

Code / Bore size (mm)	Common dimensions with switch																
	A *1	B *1	C	D	EE	F	FA *4	FB	I	J	K	KA	KK	M	MM	N	WF
ø12	25.5	22	5.5	5.5	M5	25	13(16.5)	4.5	3.5	6.5 spot face depth 3.5	32	M4 depth 7	M3 depth 6	5	6	15.5	3.5
ø16	25.5	22	5.5	5.5	M5	29	15(18.5)	4.5	3.5	6.5 spot face depth 3.5	38	M4 depth 7	M4 depth 8	6	8	20	3.5
ø20	34	29.5	8	5.5	M5	36	18.5(22)	12.5	5.5	9 spot face depth 5.5	47	M6 depth 11	M5 depth 7	8	10	25.5	4.5
ø25	37.5	32.5	11	6	M5	40	20.5(24)	13.5	5.5	9 spot face depth 5.5	51	M6 depth 11	M6 depth 12	10	12	28	5

Switch dimensions	Reed T0H/T0V, T5H/T5V *6		Proximity T2H/T2V, T3H/T3V *6		Proximity T2WH/T2WV, T3WH/T3WV *6		Proximity F2H/F2V, F3H/F3V, F2YH/F2YV, F3YH/F3YV		Proximity F2S/F3S	
Bore size (mm)	HD	RD	HD	RD	HD	RD	HD	RD	HD	RD
ø12	1.5(0)	1.5(3)	1.5(0)	1.5(3)	3.5(2)	3.5(5)				
ø16	0	4	0	4.5	1	6				
ø20	3	7.5	3	7.5	5	9.5	7.5	12	6.5	11
ø25	4	9.5	4	9.5	6	11.5	8.5	14	7.5	13

*1 : To calculate A + stroke or B + stroke when using custom stroke, apply the next longer standard stroke (instead of the custom stroke) to the stroke value.
(Example) If the custom stroke is 7 mm, apply the standard stroke of 10 mm.
· For ø16: A + stroke = 35.5 B + stroke = 32
When you have selected "S" (dedicated unit for custom stroke), apply the custom stroke of 7 mm.
· For ø16: A + stroke = 32.5 B + stroke = 29
*2 : HD and RD dimensions for 5 mm stroke differ from these dimensions according to the setting.
3 : Refer to page 1044 for HD, RD and protruding dimensions of the 2-color LED, off-delay, AC magnetic field proof, T1 and T8* switches.
*4 : Dimensions in ( ) of FA are for the L-shaped lead wire.
*5 : For dimensions of individual accessories, refer to pages 1046 to 1049.
*6 : Dimensions in ( ) of codes HD and RD are for the type with rubber cushion.
*7 : Only F-switch is available for the ø20 or ø25 piping port surface.

● Rod end male thread

Code / Bore size (mm)	a'	c'	H	kk'	M	MM	T	wf
ø12	10.5	9	8	M5	5	6	3.2	3.5
ø16	12	10	10	M6	6	8	3.6	3.5
ø20	14	12	13	M8	8	10	5	4.5
ø25	17.5	15	17	M10x1.25	10	12	6	5

Dimensions with mounting bracket

● Axial foot (LB) with switch
SSD2-L-12 to 25 -LB

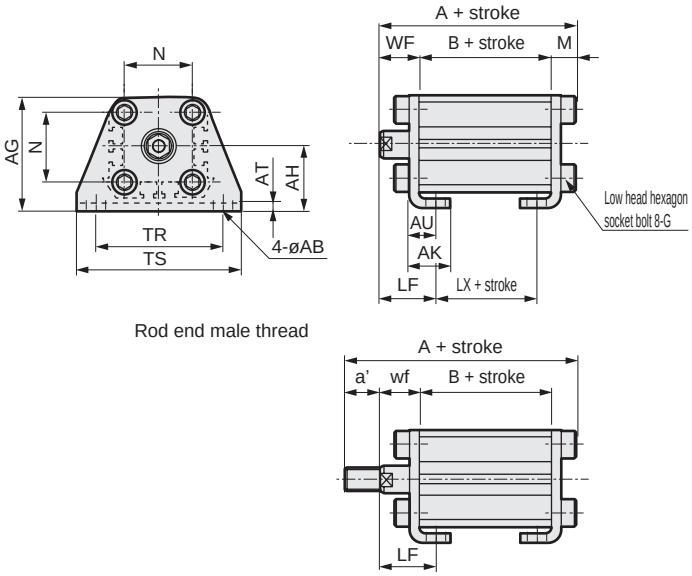

Code	Common dimensions						Female thread				
Bore size (mm)	AB	AG	AH	AK	AT	AU	G	N	TR	TS	M
ø12	5	29.5	17	12.5	2	8	M4x10	15.5	34	44	4.8
ø16	5	33.5	19	13	2	8	M4x10	20	38	48	4.8
ø20	7	42	24	15	3.2	9.2	M6x16	25.5	48	62	7.2
ø25	7	46	26	16.5	3.2	10.7	M6x16	28	52	66	7.2

Code	Male thread										
Bore size (mm)	WF	LF	A	B	LX	a'	wf	LF	A	B	LX
ø12	13.5	19.5	40.3	22	10	10.5	13.5	19.5	50.8	22	10
ø16	13.5	19.5	40.3	22	10	12	13.5	19.5	52.3	22	10
ø20	14.5	20.5	51.2	29.5	17.5	14	14.5	20.5	65.2	29.5	17.5
ø25	15	22.5	54.7	32.5	17.5	17.5	15	22.5	72.2	32.5	17.5

● Clevis bracket (CB) with switch
SSD2-L-12 to 25 -CB

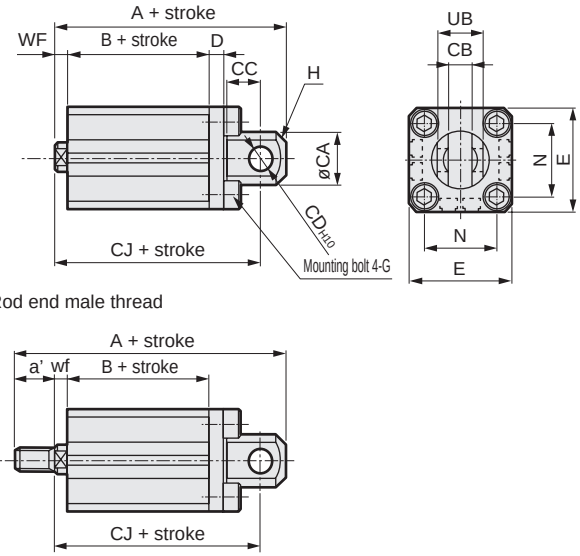

Code	Common dimensions									
Bore size (mm)	CA	CB	CC	CD	D	E	G	H	N	UB
ø12	12	5.2 $^{+0.2}_{0}$	7	5	4	25	M4x12	C1.5	15.5	10 $^{-0.1}_{-0.3}$
ø16	15	6.6 $^{+0.3}_{0}$	8	5	5	29	M4x12	C2	20	12 $^{-0.1}_{-0.4}$
ø20	20	8.2 $^{+0.2}_{0}$	12	8	5	36	M6x16	C4	25.5	16 $^{-0.1}_{-0.3}$
ø25	24	10.2 $^{+0.2}_{0}$	14	10	5	40	M6x16	C5	28	20 $^{-0.1}_{-0.3}$

Code	Female thread				Male thread				
Bore size (mm)	WF	A	B	CJ	a'	wf	A	B	CJ
ø12	3.5	45.5	22	39.5	10.5	3.5	56	22	39.5
ø16	3.5	46.5	22	40.5	12	3.5	58.5	22	40.5
ø20	4.5	61	29.5	52	14	4.5	75	29.5	52
ø25	5	67.5	32.5	57.5	17.5	5	85	32.5	57.5

● Rod side flange (FA) with switch
SSD2-L-12 to 25 -FA

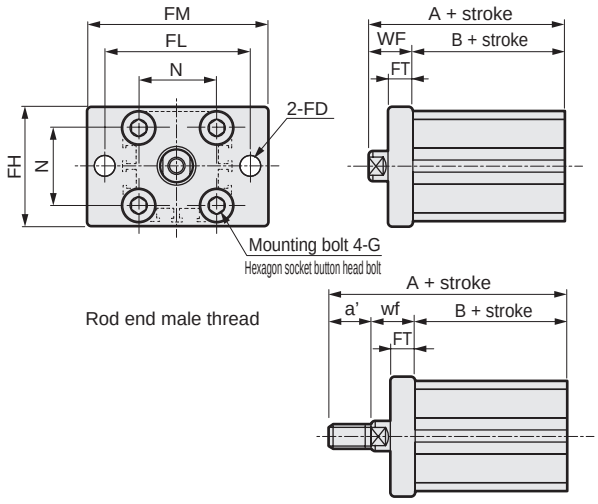

Code	Common dimensions						
Bore size (mm)	FD	FH	FL	FM	FT	N	G
ø12	4.5	25	45	55	5.5	15.5	M4x12
ø16	4.5	30	45	55	5.5	20	M4x12
ø20	6.6	39	48	60	8	25.5	M6x16
ø25	6.6	42	52	64	8	28	M6x16

Code	Female thread			Male thread			
Bore size (mm)	WF	A	B	a'	wf	A	B
ø12	13.5	35.5	22	10.5	13.5	46	22
ø16	13.5	35.5	22	12	13.5	47.5	22
ø20	14.5	44	29.5	14	14.5	58	29.5
ø25	15	47.5	32.5	17.5	15	65	32.5

● Head side flange (FB) with switch
SSD2-L-12 to 25 -FB

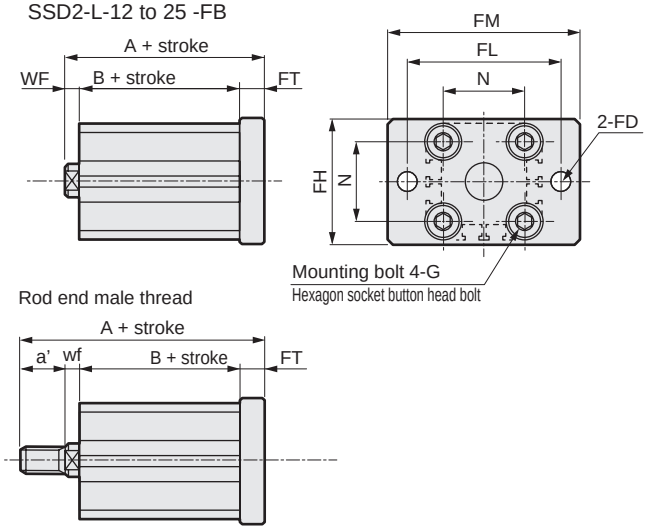

Code	Common dimensions						
Bore size (mm)	FD	FH	FL	FM	FT	N	G
ø12	4.5	25	45	55	5.5	15.5	M4x12
ø16	4.5	30	45	55	5.5	20	M4x12
ø20	6.6	39	48	60	8	25.5	M6x16
ø25	6.6	42	52	64	8	28	M6x16

Code	Female thread			Male thread			
Bore size (mm)	WF	A	B	a'	wf	A	B
ø12	3.5	31	22	10.5	3.5	41.5	22
ø16	3.5	31	22	12	3.5	43	22
ø20	4.5	42	29.5	14	4.5	56	29.5
ø25	5	45.5	32.5	17.5	5	63	32.5

SCP*3
CMK2
CMA2
SCM
SCG
SCA2
SCS2
CKV2
CAV2/COVP/N2
SSD2
SSG
SSD
CAT
MDC2
MVC
SMG
MSD/MSDG
FC*
STK
SRL3
SRG3
SRM3
SRT3
MRL2
MRG2
SM-25
ShkAbs
FJ
FK
Spd Contr
Ending

Dimensions CAD

● SSD2-12 to 25 (without switch)

ø12/ø16

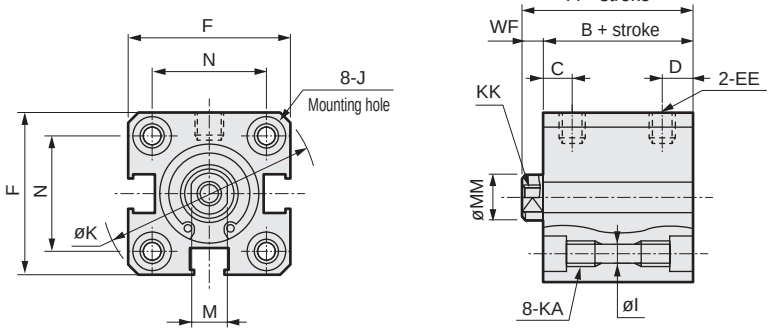

● Rod end male thread

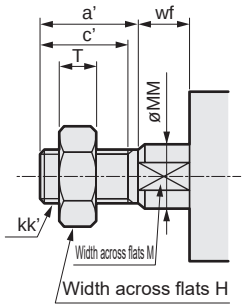

ø20/ø25

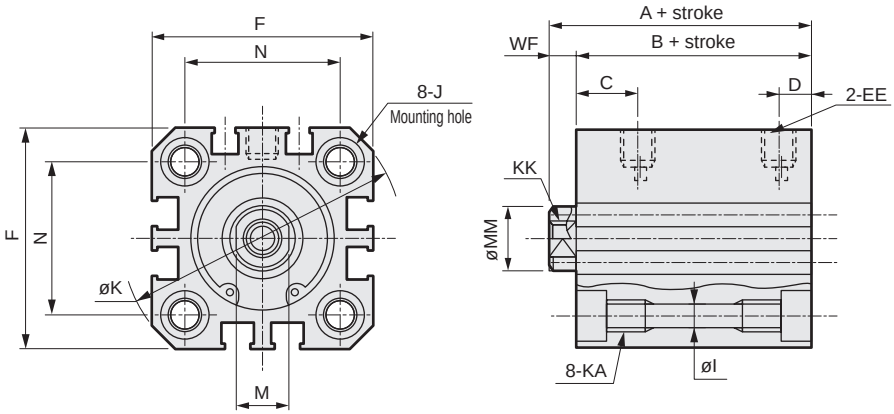

Code / Bore size (mm)	Dimensions without switch and common dimensions														
	A *1	B *1	C	D	EE	F	I	J	K	KA	KK	M	MM	N	WF
ø12	20.5	17	5.5	5.5	M5	25	3.5	6.5 spot face depth 3.5	32	M4 depth 7	M3 depth 6	5	6	15.5	3.5
ø16	20.5	17	5.5	5.5	M5	29	3.5	6.5 spot face depth 3.5	38	M4 depth 7	M4 depth 8	6	8	20	3.5
ø20	24	19.5	8	5.5	M5	36	5.5	9 spot face depth 5.5	47	M6 depth 11	M5 depth 7	8	10	25.5	4.5
ø25	27.5	22.5	11	6	M5	40	5.5	9 spot face depth 5.5	51	M6 depth 11	M6 depth 12	10	12	28	5

● Rod end male thread

Code / Bore size (mm)	a'	c'	H	kk'	M	MM	T	wf
ø12	10.5	9	8	M5	5	6	3.2	3.5
ø16	12	10	10	M6	6	8	3.6	3.5
ø20	14	12	13	M8	8	10	5	4.5
ø25	17.5	15	17	M10x1.25	10	12	6	5

*1 : To calculate A + stroke or B + stroke when using custom stroke, apply the next longer standard stroke (instead of the custom stroke) to the stroke value.
(Example) If the custom stroke is 7 mm, apply the standard stroke of 10 mm.
· For ø16: A + stroke = 30.5 / B + stroke = 27
When you have selected "S" (dedicated unit for custom stroke), apply the custom stroke of 7 mm.
· For ø16: A + stroke = 27.5 / B + stroke = 24

*2 : For dimensions of individual accessories, refer to pages 1046 to 1049.

Dimensions with mounting bracket

● Axial foot (LB) without switch
SSD2-12 to 25 -LB

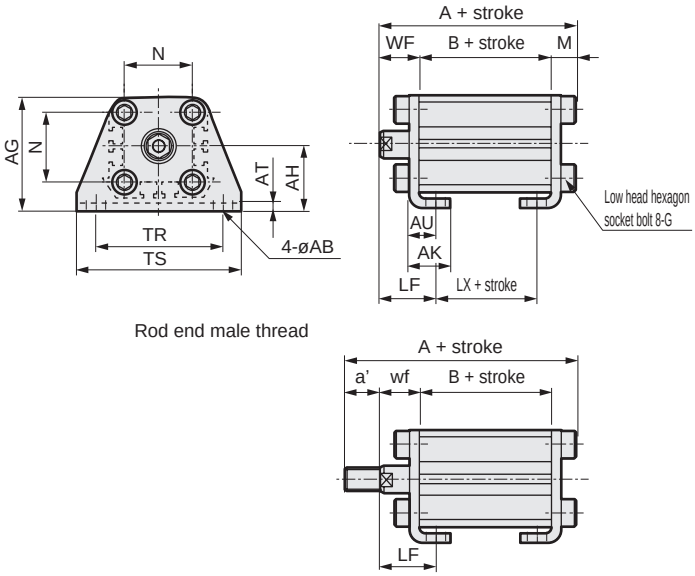

Code	Common dimensions				Female thread						
Bore size (mm)	AB	AG	AH	AK	AT	AU	G	N	TR	TS	M
ø12	5	29.5	17	12.5	2	8	M4x10	15.5	34	44	4.8
ø16	5	33.5	19	13	2	8	M4x10	20	38	48	4.8
ø20	7	42	24	15	3.2	9.2	M6x16	25.5	48	62	7.2
ø25	7	46	26	16.5	3.2	10.7	M6x16	28	52	66	7.2

Code						Male thread					
Bore size (mm)	WF	LF	A	B	LX	a'	wf	LF	A	B	LX
ø12	13.5	19.5	35.3	17	5	10.5	13.5	19.5	45.8	17	5
ø16	13.5	19.5	35.3	17	5	12	13.5	19.5	47.3	17	5
ø20	14.5	20.5	41.2	19.5	7.5	14	14.5	20.5	55.2	19.5	7.5
ø25	15	22.5	44.7	22.5	7.5	17.5	15	22.5	62.2	22.5	7.5

Note: ø20: LB cannot be selected for 5 mm stroke.

● Clevis bracket (CB) without switch
SSD2-12 to 25 -CB

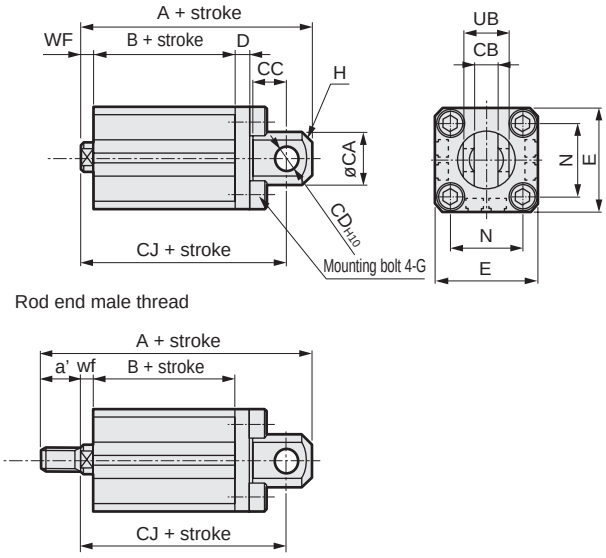

Code	Common dimensions									
Bore size (mm)	CA	CB	CC	CD	D	E	G	H	N	UB
ø12	12	$5.2^{+0.2}_{0}$	7	5	4	25	M4x12	C1.5	15.5	$10^{-0.1}_{-0.3}$
ø16	15	$6.6^{+0.3}_{0}$	8	5	5	29	M4x12	C2	20	$12^{-0.1}_{-0.4}$
ø20	20	$8.2^{+0.2}_{0}$	12	8	5	36	M6x16	C4	25.5	$16^{-0.1}_{-0.3}$
ø25	24	$10.2^{+0.2}_{0}$	14	10	5	40	M6x16	C5	28	$20^{-0.1}_{-0.3}$

Code	Female thread				Male thread				
Bore size (mm)	WF	A	B	CJ	a'	wf	A	B	CJ
ø12	3.5	40.5	17	34.5	10.5	3.5	51	17	34.5
ø16	3.5	41.5	17	35.5	12	3.5	53.5	17	35.5
ø20	4.5	51	19.5	42	14	4.5	65	19.5	42
ø25	5	57.5	22.5	47.5	17.5	5	75	22.5	47.5

● Rod side flange (FA) without switch
SSD2-12 to 25 -FA

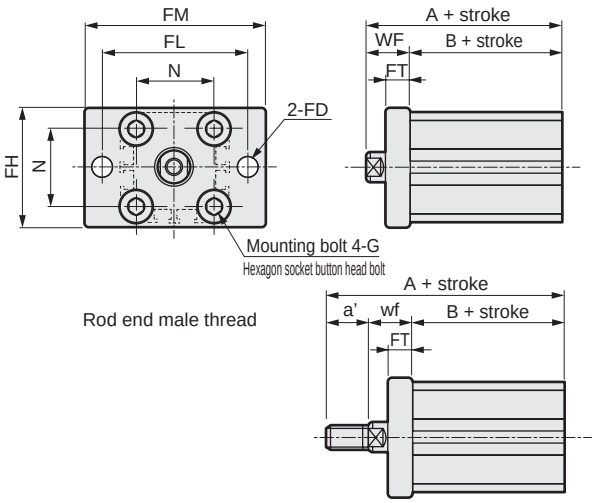

Code	Common dimensions						
Bore size (mm)	FD	FH	FL	FM	FT	N	G
ø12	4.5	25	45	55	5.5	15.5	M4x12
ø16	4.5	30	45	55	5.5	20	M4x12
ø20	6.6	39	48	60	8	25.5	M6x16
ø25	6.6	42	52	64	8	28	M6x16

Code	Female thread			Male thread			
Bore size (mm)	WF	A	B	a'	wf	A	B
ø12	13.5	30.5	17	10.5	13.5	41	17
ø16	13.5	30.5	17	12	13.5	42.5	17
ø20	14.5	34	19.5	14	14.5	48	19.5
ø25	15	37.5	22.5	17.5	15	55	22.5

● Head side flange (FB) without switch
SSD2-12 to 25 -FB

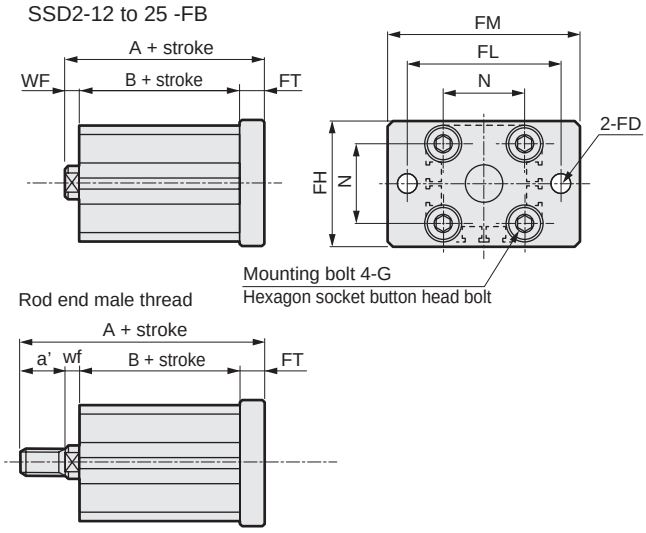

Code	Common dimensions						
Bore size (mm)	FD	FH	FL	FM	FT	N	G
ø12	4.5	25	45	55	5.5	15.5	M4x12
ø16	4.5	30	45	55	5.5	20	M4x12
ø20	6.6	39	48	60	8	25.5	M6x16
ø25	6.6	42	52	64	8	28	M6x16

Code	Female thread			Male thread			
Bore size (mm)	WF	A	B	a'	wf	A	B
ø12	3.5	26	17	10.5	3.5	36.5	17
ø16	3.5	26	17	12	3.5	38	17
ø20	4.5	32	19.5	14	4.5	46	19.5
ø25	5	35.5	22.5	17.5	5	53	22.5

Dimensions CAD

● SSD2-L-32 to 100 (with switch, TOH/V, T5H/V, T2H/V, T3H/V)

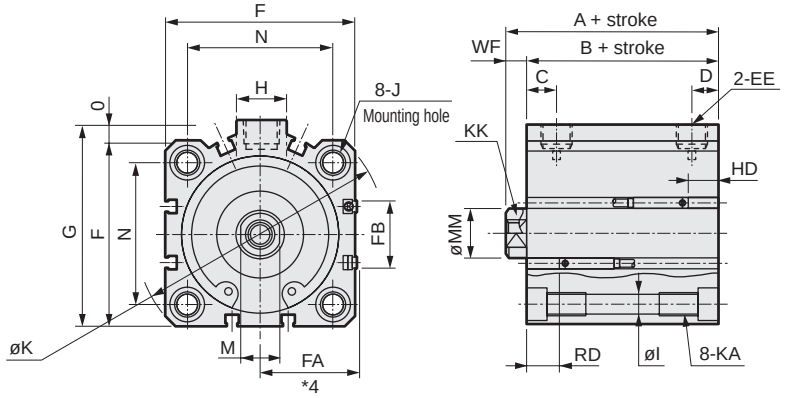

● Rod end male thread

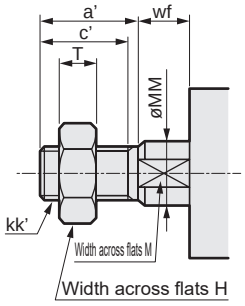

● SSD2-32 to 100 (without switch)

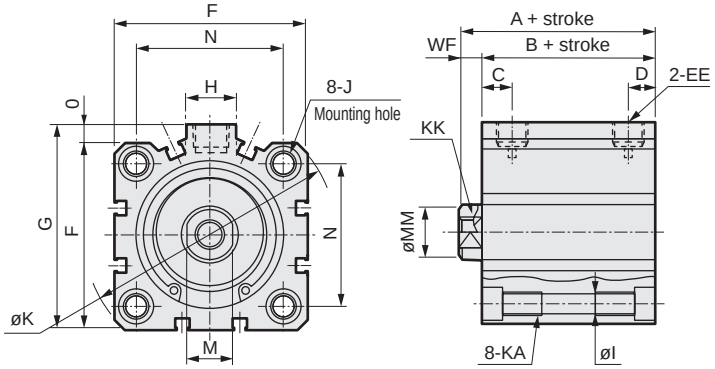

Code / Bore size (mm)	No switch A *1, *6	No switch B *1, *6	A *1	B *1	C *8	D *8	EE	F	FA *4	FB	G	H	I	J	K	KA	KK	M	MM	N	O	WF
	Common dimensions with switch																					
ø32	30(40)	23(33)	40	33	8(10)	8(5.5)	Rc1/8 *7	45	23(26.5)	20.5	49.5	12.5	5.5	9 spot face Depth 5.5	60	M6 depth 11	M8 depth 13	14	16	34	4.5	7
ø40	36.5(46.5)	29.5(39.5)	46.5	39.5	12(11.5)	8.5(8)	Rc1/8	52	26.5(30)	27.5	57	15	5.5	9 spot face Depth 5.5	69	M6 depth 11	M8 depth 13	14	16	40	5	7
ø50	38.5(48.5)	30.5(40.5)	48.5	40.5	10.5	10.5	Rc1/4	64	32.5(36)	28.5	71	18	6.9	11 spot face Depth 6.5	86	M8 depth 13	M10 depth 15	17	20	50	7	8
ø63	44(54)	36(46)	54	46	13	11	Rc1/4	77	39(42.5)	28.5	84	23	8.7	14 spot face Depth 9	103	M10 depth 25	M10 depth 15	17	20	60	7	8
ø80	53.5(63.5)	43.5(53.5)	63.5	53.5	16	13	Rc3/8	98	49.5(53)	28.5	104	31	10.5	17.5 spot face Depth 11	132	M12 depth 28	M16 depth 21	22	25	77	6	10
ø100	65(75)	53(63)	75	63	23	15	Rc3/8	117	59(62.5)	28.5	123.5	38	10.5	17.5 spot face Depth 11	156	M12 depth 28	M20 depth 27	27	30	94	6.5	12

Switch dimensions / Bore size (mm)	Reed T0H/T0V, T5H/T5V HD *2	Reed T0H/T0V, T5H/T5V RD *2	Proximity T2H/T2V, T3H/T3V HD *2	Proximity T2H/T2V, T3H/T3V RD *2	Proximity T2WH/T2WV, T3WH/T3WV HD	Proximity T2WH/T2WV, T3WH/T3WV RD
ø32	4	9.5	4	9.5	6	11.5
ø40	7	12	7	12	8.5	13.5
ø50	7.5	12.5	7.5	12.5	9	14
ø63	12.5	13	12.5	13	14	14.5
ø80	17.5	15.5	17.5	15.5	19	17
ø100	23	19.5	23	19.5	24.5	21

*1 : To calculate A + stroke or B + stroke when using custom stroke, apply the next longer standard stroke (instead of the custom stroke) to the stroke value.
(Example) If the custom stroke is 7 mm, apply the standard stroke of 10 mm.
· For ø32: A + stroke = 40 B + stroke = 33
When you have selected "S" (dedicated unit for custom stroke), apply the custom stroke of 7 mm.
· For ø32: A + stroke = 37 B + stroke = 30
*2 : HD and RD dimensions for 5 mm stroke differ from these dimensions according to the setting.
3 : Refer to page 1044 for HD, RD and protruding dimensions of the 2-color LED, off-delay, AC magnetic field proof, T1 and T8* switches.
*4 : Dimensions in ( ) of FA are for the L-shaped lead wire.
*5 : For dimensions of individual accessories, refer to pages 1046 to 1049.
*6 : Dimensions in ( ) of codes A and B are for strokes of more than 50 mm.
*7 : The ø32 bore size with a 5 mm stroke and without a switch has a port size of M5.*8 : Dimensions in ( ) of codes C and D are when the value is for a 5 mm stroke without switch.

● Rod end male thread

Code / Bore size (mm)	a'	c'	H	kk'	M	MM	T	wf
ø32	23.5	20.5	22	M14x1.5	14	16	8	5
ø40	23.5	20.5	22	M14x1.5	14	16	8	5
ø50	28.5	26	27	M18x1.5	17	20	11	5
ø63	28.5	26	27	M18x1.5	17	20	11	5
ø80	35.5	32.5	32	M22x1.5	22	25	13	8
ø100	35.5	32.5	41	M26x1.5	27	30	16	8

Dimensions

● Axial foot (LB)
SSD2-(L)-32 to 100 -LB

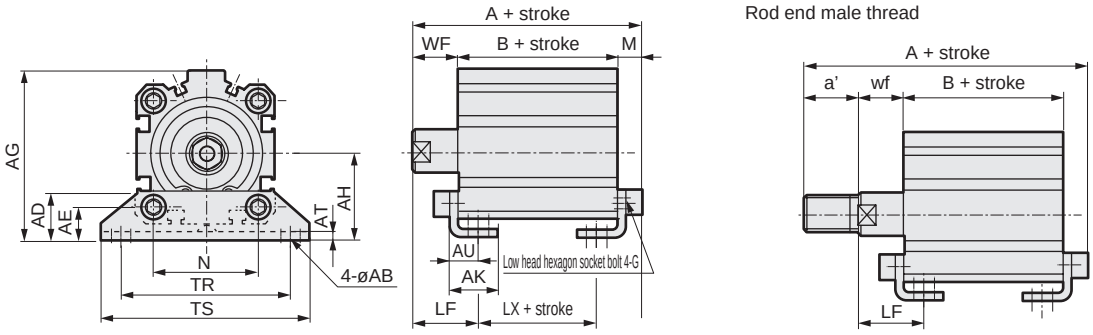

Code / Bore size (mm)	Common dimensions						Female thread									No switch			With switch		
	AB	AD	AE	AG	AH	AK	AT	AU	G	N	TR	TS	M	WF	LF	A	B	LX	A	B	LX
ø32	7	18.5	13	57	30	17	3.2	11.2	M6x16	34	57	71	7.2	17	25	47.2(57.2)	23(33)	7(17)	57.2	33	17
ø40	7	18	13	64	33	18.2	3.2	11.2	M6x16	40	64	78	7.2	17	25	53.7(63.7)	29.5(39.5)	13.5(23.5)	63.7	39.5	23.5
ø50	9	22	14	78	39	22.7	3.2	14.7	M8x20	50	79	95	8.2	18	29.5	56.7(66.7)	30.5(40.5)	7.5(17.5)	66.7	40.5	17.5
ø63	11	26	16	91.5	46	25.2	3.2	16.2	M10x25	60	95	113	9.2	18	31	63.2(73.2)	36(46)	10(20)	73.2	46	20
ø80	13	31.5	20.5	114	59	30.5	4.5	19.5	M12x40	77	118	140	11.5	20	35	75(85)	43.5(53.5)	13.5(23.5)	85	53.5	23.5
ø100	13	35	24	136	71	35.5	6	23	M12x40	94	137	162	13	22	39	88(98)	53(63)	19(29)	98	63	29

Code / Bore size (mm)	Male thread								
	a'	wf	LF	No switch			With switch		
				A	B	LX	A	B	LX
ø32	23.5	15	23	68.7(78.7)	23(33)	7(17)	78.7	33	17
ø40	23.5	15	23	75.2(85.2)	29.5(39.5)	13.5(23.5)	85.2	39.5	23.5
ø50	28.5	15	26.5	82.2(92.2)	30.5(40.5)	7.5(17.5)	92.2	40.5	17.5
ø63	28.5	15	28	88.7(98.7)	36(46)	10(20)	98.7	46	20
ø80	35.5	18	33	108.5(118.5)	43.5(53.5)	13.5(23.5)	118.5	53.5	23.5
ø100	35.5	18	35	119.5(129.5)	53(63)	19(29)	129.5	63	29

Note: LB cannot be selected when B + stroke is at or less than the stroke value below.
ø80: 72 or less, ø: 69 or less

* Dimensions in ( ) are for strokes of more than 50 mm.

● Clevis bracket (CB)
SSD2-(L)-32 to 100 -CB

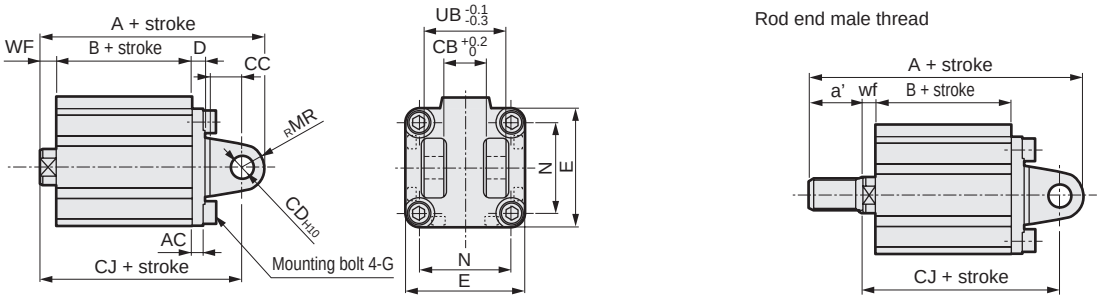

Code / Bore size (mm)	Common dimensions										Female thread							Male thread							
	AC	CB	CC	CD	D	E	G	MR	N	UB	WF	No switch			With switch			a'	wf	No switch			With switch		
												A	B	CJ	A	B	CJ			A	B	CJ	A	B	CJ
ø32	4.5	18.2	14	10	5	45	M6x16	10	34	36	7	60(70)	23(33)	50	70	33	60	23.5	5	81.5(91.5)	23(33)	48	91.5	33	58
ø40	5	18.2	14	10	6	52	M6x16	10	40	36	7	68.5(78.5)	29.5(39.5)	58.5	78.5	39.5	68.5	23.5	5	90(100)	29.5(39.5)	56.5	100	39.5	66.5
ø50	6	22.2	20	14	7	64	M8x20	14	50	44	8	80.5(90.5)	30.5(40.5)	66.5	90.5	40.5	76.5	28.5	5	106(116)	30.5(40.5)	63.5	116	40.5	73.5
ø63	7	22.2	20	14	8	77	M10x25	14	60	44	8	88(98)	36(46)	74	98	46	84	28.5	5	113.5(123.5)	36(46)	71	123.5	46	81
ø80	9	28.2	27	18	10	98	M12x40	18	77	56	10	109.5(119.5)	43.5(53.5)	91.5	119.5	53.5	101.5	35.5	8	143(153)	43.5(53.5)	89.5	153	53.5	99.5
ø100	12	32.2	31	22	13	117	M12x40	22	94	64	12	132(142)	53(63)	110	142	63	120	35.5	8	163.5(173.5)	53(63)	106	173.5	63	116

* Dimensions in ( ) are for strokes of more than 50 mm.

Dimensions CAD

● Rod side flange (FA)
SSD2-(L)-32 to 100 -FA

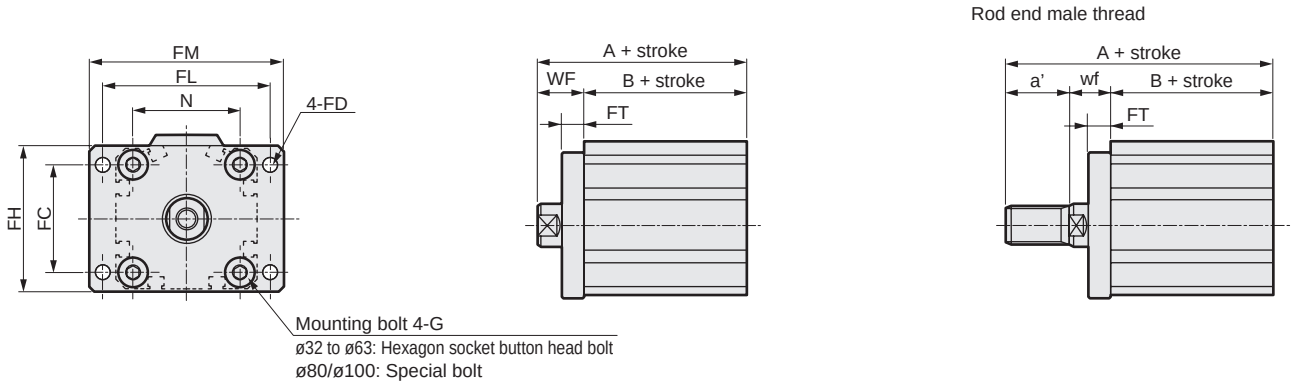

Code	Common dimensions								Female thread					Male thread					
Bore size (mm)	FC	FD	FH	FL	FM	FT	N	G	WF	No switch		With switch		a'	wf	No switch		With switch	
										A	B	A	B			A	B	A	B
ø32	34	5.5	48	56	65	8	34	M6x16	17	40(50)	23(33)	50	33	23.5	15	61.5(71.5)	23(33)	71.5	33
ø40	40	5.5	54	62	72	8	40	M6x16	17	46.5(56.5)	29.5(39.5)	56.5	39.5	23.5	15	68(78)	29.5(39.5)	78	39.5
ø50	50	6.6	67	76	89	9	50	M8x20	18	48.5(58.5)	30.5(40.5)	58.5	40.5	28.5	15	74(84)	30.5(40.5)	84	40.5
ø63	60	9	80	92	108	9	60	M10x25	18	54(64)	36(46)	64	46	28.5	15	79.5(89.5)	36(46)	89.5	46
ø80	77	11	99	116	134	11	77	M12x40	20	63.5(73.5)	43.5(53.5)	73.5	53.5	35.5	18	97(107)	43.5(53.5)	107	53.5
ø100	94	11	117	136	154	11	94	M12x40	22	75(85)	53(63)	85	63	35.5	18	106.5(116.5)	53(63)	116.5	63

* Dimensions in ( ) are for strokes of more than 50 mm.

● Head side flange (FB)
SSD2-(L)-32 to 100 -FB

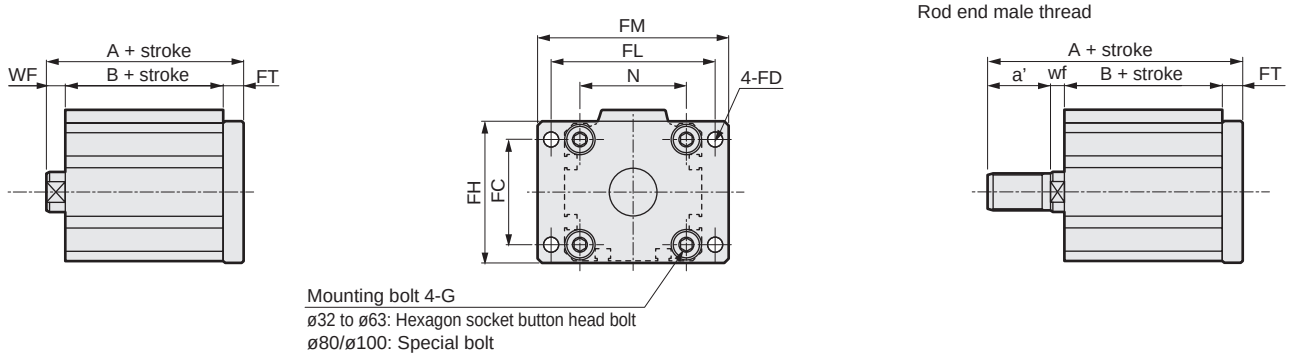

Code	Common dimensions								Female thread					Male thread					
Bore size (mm)	FC	FD	FH	FL	FM	FT	N	G	WF	No switch		With switch		a'	wf	No switch		With switch	
										A	B	A	B			A	B	A	B
ø32	34	5.5	48	56	65	8	34	M6x16	7	38(48)	23(33)	48	33	23.5	5	59.5(69.5)	23(33)	69.5	33
ø40	40	5.5	54	62	72	8	40	M6x16	7	44.5(54.5)	29.5(39.5)	54.5	39.5	23.5	5	66(76)	29.5(39.5)	76	39.5
ø50	50	6.6	67	76	89	9	50	M8x20	8	47.5(57.5)	30.5(40.5)	57.5	40.5	28.5	5	73(83)	30.5(40.5)	83	40.5
ø63	60	9	80	92	108	9	60	M10x25	8	53(63)	36(46)	63	46	28.5	5	78.5(88.5)	36(46)	88.5	46
ø80	77	11	99	116	134	11	77	M12x40	10	64.5(74.5)	43.5(53.5)	74.5	53.5	35.5	8	98(108)	43.5(53.5)	108	53.5
ø100	94	11	117	136	154	11	94	M12x40	12	76(86)	53(63)	86	63	35.5	8	107.5(117.5)	53(63)	117.5	63

* Dimensions in ( ) are for strokes of more than 50 mm.

MEMO

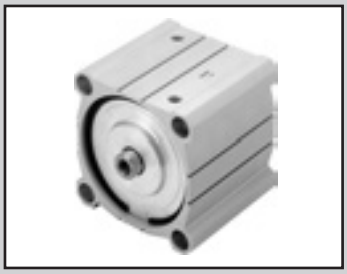

Compact cylinder double acting/single rod (large bore size)

SSD2 Series

● Bore size: ø125/ø140/ø160/ø180/ø200

JIS symbol

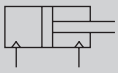

RoHS CAD

Specifications

Item		SSD2 SSD2-L (with switch)				
Bore size	mm	ø125	ø140	ø160	ø180	ø200
Actuation		Double acting				
Working fluid		Compressed air				
Max. working pressure	MPa	1.0 (≈150 psi, 10 bar)			0.7 (≈100 psi, 7 bar)	
Min. working pressure	MPa	0.05 (≈7.3 psi, 0.5 bar)				
Proof pressure	MPa	1.6 (≈230 psi, 16 bar)			1.05 (≈150 psi, 10.5 bar)	
Ambient temperature	°C	-10 (14°F) to 60 (140°F) (no freezing)				
Port size		Rc3/8			Rc1/2	
Stroke tolerance	mm	$^{+2.0}_{0}$				
Working piston speed	mm/s	50 to 300			20 to 300	
Cushion		With rubber cushion (standard)				
Lubrication		Not required (use turbine oil class 1 ISO VG32 if necessary for lubrication)				
Allowable absorbed energy J	With rubber cushion	6.52	6.52	7.78	12.4	
	Without cushion	-				

Stroke

Bore size (mm)	Standard stroke (mm)	Max. stroke (mm)	Min. stroke (mm)
ø125	10, 20, 30, 40, 50 75, 100, 125, 150 175, 200, 250, 300	300	1
ø140			
ø160			
ø180			
ø200			

*1: For the type with switch, refer to the table of switch mounting quantity and minimum stroke.

Number of installed switches and min. stroke (mm)

Switch quantity	1	2	3	4	5
Switch model No. / Bore size (mm)	T*	T*	T*	T*	T*
ø125	5	5	40	55	70
ø140	5	5	40	55	70
ø160	5	5	40	55	70
ø180	5	5	40	55	70
ø200	5	5	40	55	70

Note: Less than 10 mm with the 2-color LED, off-delay, AC magnetic field proof, T1* or T8* switch is not available.

Switch specifications

● 1-color/2-color LED/for AC magnetic field proof

Item	2-wire proximity	2-wire proximity			3-wire proximity				2-wire reed							2-wire proximity
	T1H/T1V	T2H/T2V/ T2JH/T2JV	T2YH/ T2YV	T2WH/ T2WV	T3H/T3V	T3PH/ T3PV	T3YH/ T3YV	T3WH/ T3WV	T0H/T0V		T5H/T5V		T8H/T8V			T2YD(*4) T2YDT
Applications	For programmable controller, relay, compact solenoid valve	Dedicated for programmable controller			For programmable controller, relay				For programmable controller, relay		For programmable controller, relay, IC circuit (no indicator lamp), serial connection		For programmable controller, relay			For programmable controller
Output method	-				NPN output	PNP output	NPN output	NPN output	-							
Pwr. supp. V.	-				10 to 28 VDC				-							
Load voltage	85 to 265 VAC	10 to 30 VDC		24 VDC ±10%	30 VDC or less				12/24 VDC	100/110 VAC	5/12/24 VDC	100/110 VAC	12/24 VDC	110 VAC	220 VAC	24 VDC ±10%
Load current	5 to 100 mA	5 to 20 mA (*3)			100 mA or less		50 mA or less		5 to 50 mA	7 to 20 mA	50 mA or less	20 mA or less	5 to 50 mA	7 to 20 mA	7 to 10 mA	5 to 20 mA
Indicator	LED (Lit when ON)	LED (Lit when ON)	Red/green LED (Lit when ON)	Red/green LED (Lit when ON)	LED (Lit when ON)	Yellow LED (Lit when ON)	Red/green LED (Lit when ON)	Red/green LED (Lit when ON)	LED (Lit when ON)		No indicator lamp		LED (Lit when ON)			Red/green LED (Lit when ON)
Leakage current	≤ 1 mA at 100 VAC, ≤ 2 mA at 200 VAC	1 mA or less			10 μA or less				0 mA							1 mA or less
Weight g	1 m:33 3 m:87 5 m:142	1 m:18 3 m:49 5 m:80	1 m:33 3 m:87 5 m:142	1 m:18 3 m:49 5 m:80	1 m:18 3 m:49 5 m:80		1 m:33 3 m:87 5 m:142	1 m:18 3 m:49 5 m:80	1 m:18 3 m:49 5 m:80				1 m:33 3 m:87 5 m:142			1 m:61 3 m:166 5 m:272

*1 : Refer to Ending Page 1 for detailed switch specifications and dimensions.
*2 : Switches other than the above models, such as switches with connectors, are also available. Refer to Ending Page 1.
*3 : The max. load current is 20 mA at 25°C. The current is lower than 20 mA if the operating ambient temperature around the switch is higher than 25˚C. (5 to 10 mA at 60°C)
*4 : Switch for AC magnetic field (T2YD/T2YDT) cannot be used in DC magnetic field.

Cylinder weight table (the weight of the switches is when there are 2 cylinder switches.)

(Unit: kg)

Stroke (mm)	10		20		30		40		50		75		100	
Bore size (mm)	No switch	With switch	No switch	With switch	No switch	With switch	No switch	With switch	No switch	With switch	No switch	With switch	No switch	With switch
ø125	4.58	4.68	4.85	4.95	5.11	5.21	5.38	5.48	5.64	5.74	6.30	6.40	6.97	7.07
ø140	6.36	6.47	6.66	6.77	6.97	7.08	7.27	7.38	7.58	7.69	8.34	8.45	9.10	9.21
ø160	8.64	8.76	9.02	9.14	9.40	9.52	9.78	9.90	10.16	10.28	11.11	11.23	12.06	12.18
ø180	12.98	13.06	13.38	13.46	13.78	13.86	14.18	14.26	14.58	14.66	15.59	15.67	16.59	16.67
ø200	17.23	17.31	17.69	17.77	18.16	18.24	18.62	18.70	19.08	19.16	20.23	20.31	21.39	21.47

Stroke (mm)	125		150		175		200		250		300	
Bore size (mm)	No switch	With switch	No switch	With switch	No switch	With switch	No switch	With switch	No switch	With switch	No switch	With switch
ø125	7.63	7.73	8.30	8.40	8.96	9.06	9.62	9.72	10.95	11.05	12.27	12.37
ø140	9.86	9.97	10.63	10.74	11.39	11.50	12.15	12.26	13.68	13.79	15.20	15.31
ø160	13.01	13.13	13.96	14.08	14.91	15.03	15.86	15.98	17.76	17.88	19.66	19.78
ø180	17.59	17.67	18.59	18.67	19.60	19.68	20.60	20.68	22.60	22.68	24.61	24.69
ø200	22.54	22.62	23.70	23.78	24.85	24.93	26.01	26.09	28.32	28.40	30.63	30.71

Theoretical thrust table

(Unit: N)

Bore size (mm)	Operating direction	Working pressure MPa										
		0.1	0.15	0.2	0.3	0.4	0.5	0.6	0.7	0.8	0.9	1.0
ø125	Push	$1.23x10^3$	$1.84x10^3$	$2.45x10^3$	$3.68x10^3$	$4.91x10^3$	$6.14x10^3$	$7.36x10^3$	$8.59x10^3$	$9.82x10^3$	$1.10x10^4$	$1.23x10^4$
	Pull	$1.13x10^3$	$1.70x10^3$	$2.26x10^3$	$3.39x10^3$	$4.52x10^3$	$5.65x10^3$	$6.79x10^3$	$7.92x10^3$	$9.05x10^3$	$1.02x10^4$	$1.13x10^4$
ø140	Push	$1.54x10^3$	$2.31x10^3$	$3.08x10^3$	$4.62x10^3$	$6.16x10^3$	$7.70x10^3$	$9.24x10^3$	$1.08x10^4$	$1.23x10^4$	$1.39x10^4$	$1.54x10^4$
	Pull	$1.44x10^3$	$2.16x10^3$	$2.89x10^3$	$4.33x10^3$	$5.77x10^3$	$7.22x10^3$	$8.66x10^3$	$1.01x10^4$	$1.15x10^4$	$1.30x10^4$	$1.44x10^4$
ø160	Push	$2.01x10^3$	$3.02x10^3$	$4.02x10^3$	$6.03x10^3$	$8.04x10^3$	$1.01x10^4$	$1.21x10^4$	$1.41x10^4$	$1.61x10^4$	$1.81x10^4$	$2.01x10^4$
	Pull	$1.88x10^3$	$2.83x10^3$	$3.77x10^3$	$5.65x10^3$	$7.54x10^3$	$9.42x10^3$	$1.13x10^4$	$1.32x10^4$	$1.51x10^4$	$1.70x10^4$	$1.88x10^4$
ø180	Push	$2.54x10^3$	$3.82x10^3$	$5.09x10^3$	$7.63x10^3$	$1.02x10^4$	$1.27x10^4$	$1.53x10^4$	$1.78x10^4$	-	-	-
	Pull	$2.39x10^3$	$3.58x10^3$	$4.77x10^3$	$7.16x10^3$	$9.54x10^3$	$1.19x10^4$	$1.43x10^4$	$1.67x10^4$	-	-	-
ø200	Push	$3.14x10^3$	$4.71x10^3$	$6.28x10^3$	$9.43x10^3$	$1.26x10^4$	$1.57x10^4$	$1.89x10^4$	$2.20x10^4$	-	-	-
	Pull	$3.02x10^3$	$4.52x10^3$	$6.03x10^3$	$9.05x10^3$	$1.21x10^4$	$1.51x10^4$	$1.81x10^4$	$2.11x10^4$	-	-	-

SCP*3
CMK2
CMA2
SCM
SCG
SCA2
SCS2
CKV2
CAV2/COVP/N2
SSD2
SSG
SSD
CAT
MDC2
MVC
SMG
MSD/MSDG
FC*
STK
SRL3
SRG3
SRM3
SRT3
MRL2
MRG2
SM-25
ShkAbs
FJ
FK
Spd Contr
Ending

How to order

No switch (without magnet for switch)

SSD2 - 125 - ○ ○ - 50 ——— N

With switch (built-in magnet for switch)

SSD2-L - 200 - ○ ○ - 100 - T0H - R - N

Ⓐ Model No.
Ⓑ Bore size
Ⓒ Port thread
Ⓓ Stroke
Ⓔ Switch model No. *1
Ⓕ Switch quantity
Ⓖ Option

Code	Description
Ⓐ Model No.	
SSD2	Double acting/single rod
SSD2-L	Double acting/single rod/with switch
Ⓑ Bore size (mm)	
125	ø125
140	ø140
160	ø160
180	ø180
200	ø200
Ⓒ Port thread	
Blank	Rc thread
NN	NPT thread (ø125 to ø160) (made-to-order product)
GN	G thread (ø125 to ø160) (made-to-order product)
Ⓓ Stroke (mm)	
Refer to the stroke table on the following page.	

Ⓔ Switch model No.

Lead wire Straight	Lead wire L-shaped	Contact	Voltage AC	Voltage DC	Indicator	Lead Line
T0H*	**T0V***	Reed	●	●	1-color LED	2-wire
T5H*	**T5V***	Reed	●	●	No indicator lamp	2-wire
T8H*	**T8V***	Reed	●	●	1-color LED	2-wire
T1H*	**T1V***	Proximity	●		1-color LED	2-wire
T2H*	**T2V***	Proximity		●	1-color LED	2-wire
T3H*	**T3V***	Proximity		●	1-color LED	3-wire
T3PH*	**T3PV***	Proximity		●	1-color LED	3-wire
T2WH*	**T2WV***	Proximity		●	2-color LED	2-wire
T2YH*	**T2YV***	Proximity		●	2-color LED	2-wire
T3WH*	**T3WV***	Proximity		●	2-color LED	3-wire
T3YH*	**T3YV***	Proximity		●	2-color LED	3-wire
T2JH*	**T2JV***	Proximity		●	1-color LED off-delay	2-wire
T2YD*	**-**	Proximity		●	2-color LED for AC magnetic field	2-wire
T2YDT*	**-**	Proximity		●	2-color LED for AC magnetic field	2-wire

*** Lead wire length**	
Blank	1 m (standard)
3	3 m (option)
5	5 m (option)
Ⓕ Switch quantity	
R	1 on rod side
H	1 on head side
D	2
Ⓖ Option	
Blank	Rod end female thread
N	Rod end male thread
P4	Specifications for rechargeable battery
P40	Specifications for rechargeable battery

⚠ Precautions for model No. selection

*1: Switches are shipped with the product. Contact CKD if assembling before shipment is necessary.

[Example of model No.]

SSD2-L-125-50-T0H-R-N

Model: Compact cylinder, standard

Ⓑ Bore size : 125 mm
Ⓒ Port thread : Rc thread
Ⓓ Stroke : 50mm
Ⓔ Switch model No. : Reed T0H switch
· Lead wire length 1 m
Ⓕ Switch quantity : 1 on rod side
Ⓖ Option : Rod end male thread

[Stroke table]

Stroke (mm)		Applicable bore size				
		ø125	ø140	ø160	ø180	ø200
Standard stroke	10	●	●	●	●	●
	20	●	●	●	●	●
	30	●	●	●	●	●
	40	●	●	●	●	●
	50	●	●	●	●	●
	75	●	●	●	●	●
	100	●	●	●	●	●
	125	●	●	●	●	●
	150	●	●	●	●	●
	175	●	●	●	●	●
	200	●	●	●	●	●
	250	●	●	●	●	●
	300	●	●	●	●	●
Min. stroke (mm) *1		1				
Max. stroke (mm)		300				
Custom stroke *2		In 1 mm increments				

1 : Less than 5 mm for 1-color LED switch and less than 10 mm for the 2-color LED, off-delay, AC magnetic field proof, T1 or T8* switch are not available.
Refer to page 768 for the number of installed switches and the min. stroke.
*2 : Total length dimension with custom stroke is handled as custom stroke dedicated length.

How to order switch

SW - T0H

Switch model No.
(Item Ⓕ on page 770)

Internal structure and parts list (ø125 to ø160) (with cushion)

● SSD2-L-125 to 160 (double acting/single rod/with switch)

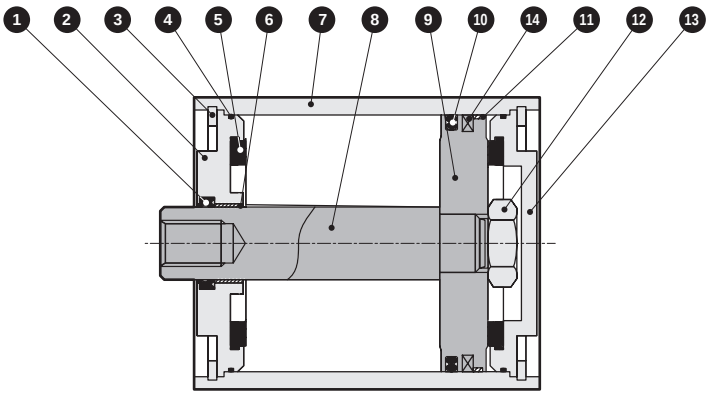

● SSD2-125 to 160 (double acting/single rod/without switch)

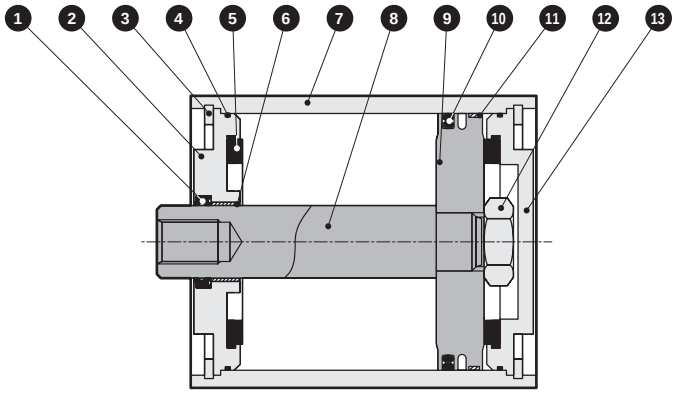

No.	Part name	Material	Remarks
1	Rod packing	Nitrile rubber	
2	Rod metal	Aluminum die-casting	Chromate
3	C-snap ring	Steel	Zinc phosphate
4	Metal gasket	Nitrile rubber	
5	Cushion rubber	Urethane rubber	
6	Bush	Oiles drymet	
7	Body	Aluminum alloy	Hard alumite
8	Piston rod	Steel	Industrial chrome plating

No.	Part name	Material	Remarks
9	Piston	Aluminum die-casting	
10	Piston packing	Nitrile rubber	
11	Wear ring	Polyacetal resin	
12	Hexagon nut	Steel	Zinc chromate
13	Base plate	Aluminum die-casting	Chromate
14	Magnet	Rubber	With switch only

Repair parts list

Bore size (mm)	Kit No.	Repair parts No.
ø125	SSD2-125K	1 4 5 10 11
ø140	SSD2-140K	
ø160	SSD2-160K	

*1: Specify the kit No. when placing an order.

Internal structure and parts list (ø180, ø200)

● SSD2-L-180, 200 (double acting/single rod/with switch)

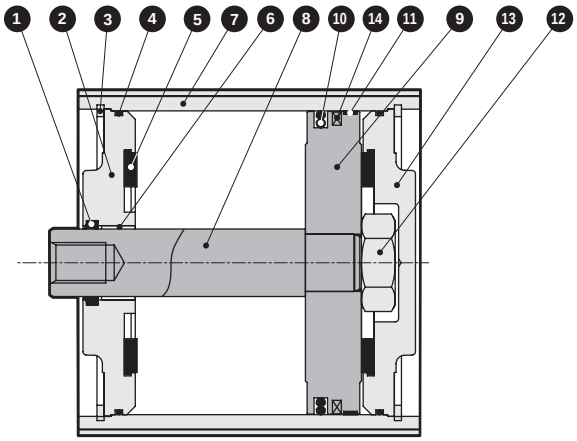

● SSD2-180, 200 (double acting/single rod/without switch)

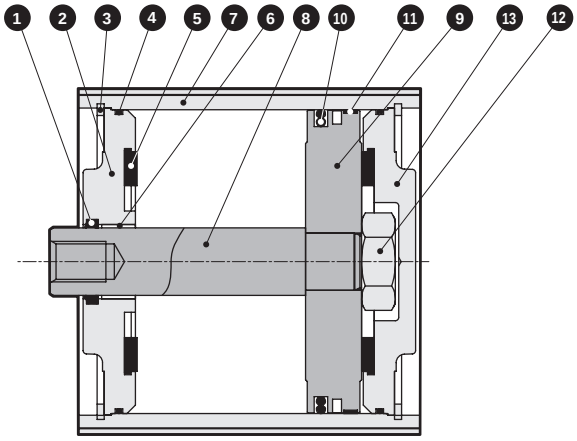

Parts list

No.	Part name	Material	Remarks	No.	Part name	Material	Remarks
1	Rod packing	Nitrile rubber		9	Piston	Aluminum alloy	
2	Rod metal	Cast iron	Paint	10	Piston packing	Nitrile rubber	
3	C-snap ring	Steel	Zinc phosphate	11	Wear ring	Polyacetal resin	
4	Gasket	Nitrile rubber		12	Hexagon nut	Steel	Zinc chromate
5	Cushion rubber	Urethane rubber		13	Cover	Cast iron	Paint
6	Bush	Oiles drymet		14	Magnet	Rubber	With switch only
7	Body	Aluminum alloy	Hard alumite				
8	Piston rod	Steel	Industrial chrome plating				

Repair parts list

Bore size (mm)	Kit No.	Repair parts No.
ø180	SSD2-180K	1 4 5 10 11
ø200	SSD2-200K	

Dimensions (ø125 to ø160)

● SSD2-(L)-125 to 160 (double acting/single rod)

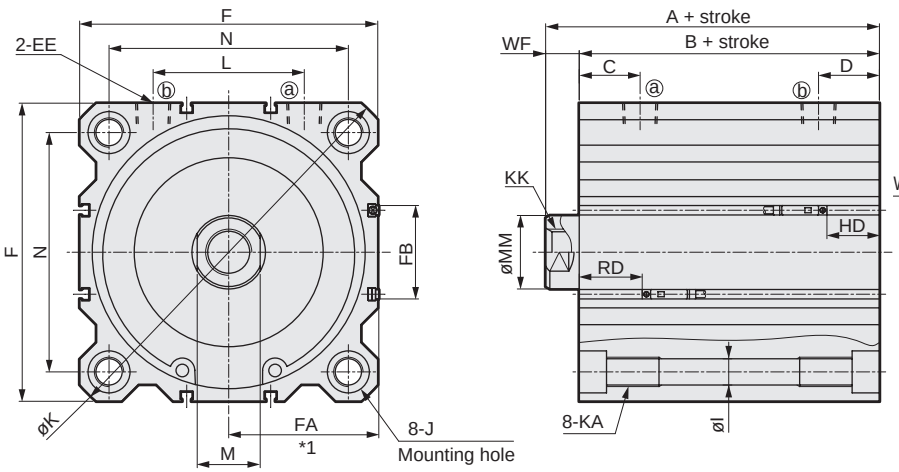

● Rod end male thread

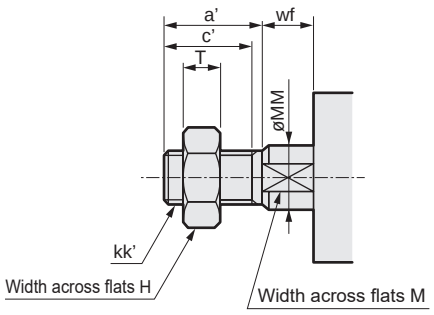

Code / Bore size (mm)	Common dimensions with switch															
	A	B	C	D	EE	F	I	J	K	KA	KK	L	M	MM	N	WF
ø125	99	83	29	29	Rc3/8	142	12.5	20 spot face depth 13	190	M14 depth 25	M22 depth 30	72	30	35	114	16
ø140	99	83	27.5	27.5	Rc3/8	158	12.5	20 spot face depth 13	210	M14 depth 25	M22 depth 30	80	30	35	128	16
ø160	108	91	30	30	Rc3/8	178	14.7	23 spot face depth 15.2	238	M16 depth 28	M24 depth 33	90	36	40	144	17

Code	T0H/V, T2H/V, T3H/V, T5/V				T2YH/V, T3YH/V, T2JH/V				T1H/V, T2YD				T2WH/V, T3WH/V				T8H/V			
Bore size (mm)	HD	RD	FA *1	FB	HD	RD	FA *1	FB	HD	RD	FA *1	FB	HD	RD	FA *1	FB	HD	RD	FA *1	FB
ø125	30	35	71.5 (75)	44.5	28.5	33.5	77 (80)	48	28.5	33.5	82.5 (85.5)	48	31.5	36.5	71.5 (75)	44.5	24	29	77 (80)	48
ø140	31.5	33.5	79.5 (83)	44.5	30	32	85 (88)	48	30	32	90.5 (93.5)	48	33	35	79.5 (83)	44.5	25.5	27.5	85 (88)	48
ø160	34	39	89.5 (93)	48.5	32.5	37.5	95 (98)	52	32.5	37.5	100.5 (103.5)	52	35.5	40.5	89.5 (93)	48.5	28	33	95 (98)	52

*1: Dimensions in ( ) of FA are for the L-shaped lead wire.

Dimensions of rod end male thread

Code / Bore size (mm)	a'	c'	H	kk'	M	MM	T	wf
ø125	45	42	46	M30x1.5	30	35	18	13
ø140	45	42	46	M30x1.5	30	35	18	13
ø160	50	47	55	M36x1.5	36	40	21	14

Dimensions (ø180, ø200)

● SSD2-(L)-180, 200 (double acting/single rod)

● Rod end male thread

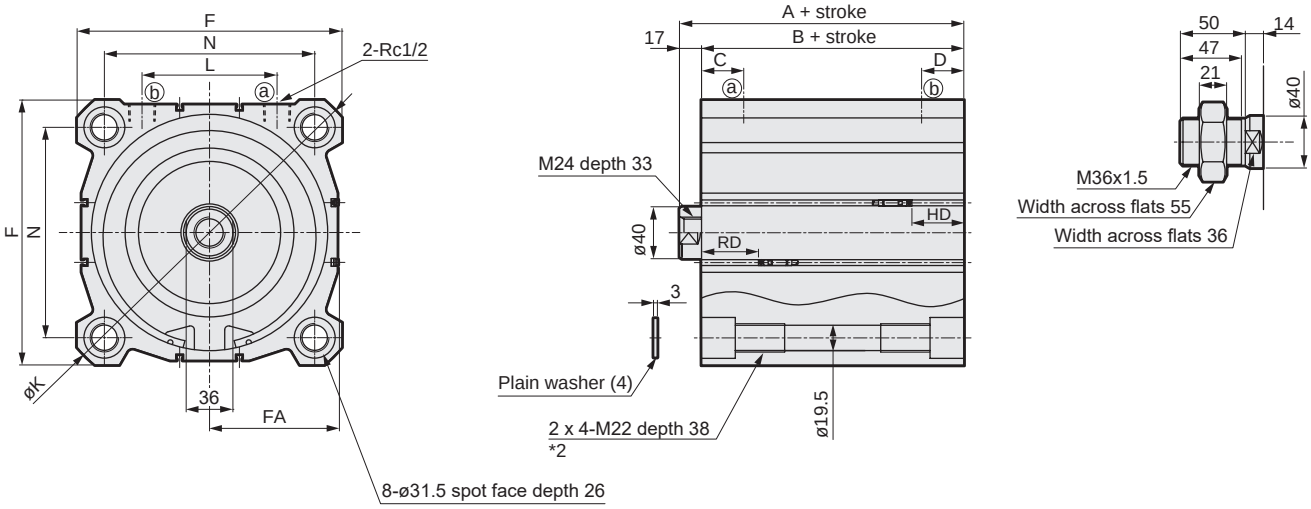

Code / Bore size (mm)	A	B	C	D	F	K	L	N
ø180	119	102	32.5	32.5	204	270	104	162
ø200	126	109	33.5	33.5	226	300	110	182

Code	T0H/V, T2H/V, T3H/V, T5H/V			T2YH/V, T3YH/V, T2JH/V			T1H/V, T2YD			T2WH/V, T3WH/V			T8H/V		
Bore size (mm)	HD	RD	FA *1	HD	RD	FA *1	HD	RD	FA *1	HD	RD	FA *1	HD	RD	FA *1
ø180	39.5	43.5	99 (102.5)	38.5	42.5	104.5 (107.5)	38.5	42.5	110 (113)	41.5	45.5	99 (102.5)	33.5	37.5	104.5 (107.5)
ø200	44.5	45.5	109.5 (113)	43.5	44.5	115 (118)	43.5	44.5	120.5 (123.5)	46.5	47.5	109.5 (113)	38.5	39.5	115 (118)

*1: Dimensions in ( ) of FA are for the L-shaped lead wire.
*2: 2x4-M22 through hole for 20 mm or less stroke.

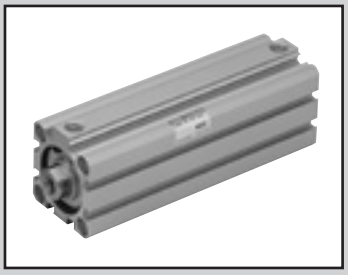

Compact cylinder, double acting/single rod/high load

SSD2-K Series

● Bore size: ø12/ø16/ø20/ø25/ø32
ø40/ø50/ø63/ø80/ø100

JIS symbol

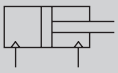

RoHS CAD

Specifications

Item	SSD2-K SSD2-KL (with switch)									
Bore size mm	ø12	ø16	ø20	ø25	ø32	ø40	ø50	ø63	ø80	ø100
Actuation	Double acting									
Working fluid	Compressed air									
Max. working pressure MPa	1.0 (≈150 psi, 10 bar)									
Min. working pressure MPa	0.1 (≈15 psi, 1 bar)							0.05 (≈7.3 psi, 0.5 bar)		
Proof pressure MPa	1.6 (≈230 psi, 16 bar)									
Ambient temperature °C	-10 (14°F) to 60 (140°F) (no freezing)									
Port size	M5				Rc1/8		Rc1/4		Rc3/8	
Stroke tolerance mm	+2.0 0									
Working piston speed mm/s	50 to 500							50 to 300		
Cushion	Rubber cushion									
Lubrication	Not required (use turbine oil ISO VG32 if necessary for lubrication)									
Allowable absorbed energy J	0.04	0.09	0.16	0.16	0.40	0.63	0.98	1.56	2.51	3.92

Stroke

Bore size (mm)	Standard stroke (mm)	Max. stroke (mm)	Min. stroke (mm)
ø12	5/10/15/20 25/30	30	1
ø16			
ø20	5/10/15/20/25 30/35/40/45/50	50	
ø25			
ø32	5/10/15/20/25/30/ 35/40/45/50/75/100	100	
ø40			
ø50	10/15/20/25 30/35/40/45/50 75/100		
ø63			
ø80			
ø100			

*1 : When using the type with switch, refer to the table of the min. stroke with switch.
*2: Refer to page 789 for the min. stroke with mounting bracket LB.

Min. stroke with switch (1 or 2 switches)

Bore size (mm)	T0H/V / T5H/V	T2H/V / T3H/V
ø12	10(5)	5
ø16		
ø20	5	
ø25		
ø32		
ø40		
ø50		
ø63		
ø80		
ø100		

1: Less than 10 mm with the 2-color LED, off-delay, AC magnetic field proof, T1 or T8* switch is not available.
*2: Values in ( ) are for the type with 1 on rod side.

Custom stroke

● SSD2-K Series

Item	Standard products		Optional products	
	Standard stroke body with spacer		Dedicated unit (-S)	
Model No.	Refer to How to order.		Add "-S" option code to the model No.	
Description	A spacer is added to the standard stroke body to adjust the stroke in 1 mm increments.		Dedicated units of the required stroke are available.	
Stroke range	Bore size	Stroke range	Bore size	Stroke range
	12/16	1 to 29	12, 16	6 to 29
	20 to 25	1 to 49	20, 25	6 to 49
	32 to 100	1 to 99	32 to 100	11 to 99
Example of model No.	Model No.: SSD2-K-32-41 A +4 mm spacer is added to the SSD2-K-32-45 standard cylinder to create 41 mm stroke. B + stroke is 88 mm.		Model No.: SSD2-K-32-41-S Dedicated units for 41 mm stroke are available. B + stroke is 74mm.	

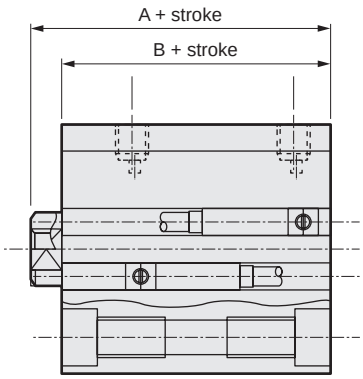

Switch specifications (F-switch)

● 1-color/2-color LED

Item	2-wire proximity	3-wire proximity	2-wire proximity		3-wire proximity		
	F2S	F3S	F2H/F2V	F2YH/F2YV	F3H/F3V	F3PH/F3PV (made to order)	F3YH/F3YV
Applications	Dedicated for programmable controller	For programmable controller, relay	Dedicated for programmable controller		For programmable controller, relay		
Output method	-	NPN output	-		NPN output	PNP output	NPN output
Power supply voltage	-	10 to 28 VDC	-		10 to 28 VDC	4.5 to 28 VDC	10 to 28 VDC
Load voltage	10 to 30 VDC	30 VDC or less	10 to 30 VDC	24 VDC ±10%	30 VDC or less		
Load current	5 to 20 mA	50 mA or less	5 to 20 mA		50 mA or less		
Indicator	LED (Lit when ON)		Yellow LED (Lit when ON)	Red/green LED (Lit when ON)	Yellow LED (Lit when ON)		Red/green LED (Lit when ON)
Leakage current	1 mA or less	10 μA or less	1 mA or less		10 μA or less		
Weight g	1 m:10 3 m:29						

Switch specifications (T-switch)

● 1-color/2-color LED/for AC magnetic field proof

Item	2-wire proximity	2-wire proximity			3-wire proximity				2-wire reed							2-wire proximity
	T1H/T1V	T2H/T2V/T2JH/T2JV	T2YH/T2YV	T2WH/T2WV	T3H/T3V	T3PH/T3PV	T3YH/T3YV	T3WH/T3WV	T0H/T0V		T5H/T5V		T8H/T8V			T2YD(*4) T2YDT
Applications	For programmable controller, relay, compact solenoid valve	Dedicated for programmable controller			For programmable controller, relay				For programmable controller, relay		For programmable controller, relay, IC circuit (no indicator lamp), serial connection		For programmable controller, relay			For programmable controller
Output method	-				NPN output	PNP output	NPN output	NPN output	-							
Pwr. supp. V.	-				10 to 28 VDC				-							
Load voltage	85 to 265 VAC	10 to 30 VDC		24 VDC ±10%	30 VDC or less				12/24 VDC	100/110 VAC	5/12/24 VDC	100/110 VAC	12/24 VDC	110 VAC	220 VAC	24 VDC ±10%
Load current	5 to 100 mA	5 to 20 mA (*3)			100 mA or less		50 mA or less		5 to 50 mA	7 to 20 mA	50 mA or less	20 mA or less	5 to 50 mA	7 to 20 mA	7 to 10 mA	5 to 20 mA
Indicator	LED (Lit when ON)	LED (Lit when ON)	Red/green LED (Lit when ON)	Red/green LED (Lit when ON)	LED (Lit when ON)	Yellow LED (Lit when ON)	Red/green LED (Lit when ON)	Red/green LED (Lit when ON)	LED (Lit when ON)		No indicator lamp		LED (Lit when ON)			Red/green LED (Lit when ON)
Leakage current	≤ 1 mA at 100 VAC, ≤ 2 mA at 200 VAC	1 mA or less			10 μA or less				0 mA							1 mA or less
Weight g	1 m:33 3 m:87 5 m:142	1 m:18 3 m:49 5 m:80	1 m:33 3 m:87 5 m:142	1 m:18 3 m:49 5 m:80	1 m:18 3 m:49 5 m:80		1 m:33 3 m:87 5 m:142	1 m:18 3 m:49 5 m:80	1 m:18 3 m:49 5 m:80				1 m:33 3 m:87 5 m:142			1 m:61 3 m:166 5 m:272

*1: Refer to Ending Page 1 for detailed switch specifications and dimensions.
*2: Switches other than the above models, such as switches with connectors, are also available. Refer to Ending Page 1.
*3: The max. load current is 20 mA at 25°C. The current is lower than 20 mA if the operating ambient temperature around the switch is higher than 25˚C. (5 to 10 mA at 60°C)
*4: Switch for AC magnetic field (T2YD/T2YDT) cannot be used in DC magnetic field.
*5: The F-switch uses a bend-resistant lead wire.

Theoretical thrust table

(Unit: N)

Bore size (mm)	Operating direction	Working pressure MPa 0.05	0.1	0.15	0.2	0.3	0.4	0.5	0.6	0.7	0.8	0.9	1.0
ø12	Push	-	11.3	17.0	22.6	33.9	45.2	56.5	67.9	79.2	90.5	$1.02x10^2$	$1.13x10^2$
	Pull	-	8.48	12.7	17.0	25.4	33.9	42.4	50.9	59.4	67.9	76.3	84.8
ø16	Push	-	20.1	30.2	40.2	60.3	80.4	$1.01x10^2$	$1.21x10^2$	$1.41x10^2$	$1.61x10^2$	$1.81x10^2$	$2.01x10^2$
	Pull	-	15.1	22.6	30.2	45.2	60.3	75.4	90.5	$1.06x10^2$	$1.21x10^2$	$1.36x10^2$	$1.51x10^2$
ø20	Push	-	31.4	47.1	62.8	94.2	$1.26x10^2$	$1.57x10^2$	$1.88x10^2$	$2.20x10^2$	$2.51x10^2$	$2.83x10^2$	$3.14x10^2$
	Pull	-	23.6	35.3	47.1	70.7	94.2	$1.18x10^2$	$1.41x10^2$	$1.65x10^2$	$1.88x10^2$	$2.12x10^2$	$2.36x10^2$
ø25	Push	-	49.1	73.6	98.2	$1.47x10^2$	$1.96x10^2$	$2.45x10^2$	$2.95x10^2$	$3.44x10^2$	$3.93x10^2$	$4.42x10^2$	$4.91x10^2$
	Pull	-	37.8	56.7	75.6	$1.13x10^2$	$1.51x10^2$	$1.89x10^2$	$2.27x10^2$	$2.64x10^2$	$3.02x10^2$	$3.40x10^2$	$3.78x10^2$
ø32	Push	-	80.4	$1.21x10^2$	$1.61x10^2$	$2.41x10^2$	$3.22x10^2$	$4.02x10^2$	$4.83x10^2$	$5.63x10^2$	$6.43x10^2$	$7.24x10^2$	$8.04x10^2$
	Pull	-	60.3	90.5	$1.21x10^2$	$1.81x10^2$	$2.41x10^2$	$3.02x10^2$	$3.62x10^2$	$4.22x10^2$	$4.83x10^2$	$5.43x10^2$	$6.03x10^2$
ø40	Push	-	$1.26x10^2$	$1.88x10^2$	$2.51x10^2$	$3.77x10^2$	$5.03x10^2$	$6.28x10^2$	$7.54x10^2$	$8.80x10^2$	$1.01x10^3$	$1.13x10^3$	$1.26x10^3$
	Pull	-	$1.06x10^2$	$1.58x10^2$	$2.11x10^2$	$3.17x10^2$	$4.22x10^2$	$5.28x10^2$	$6.33x10^2$	$7.39x10^2$	$8.44x10^2$	$9.50x10^2$	$1.06x10^3$
ø50	Push	-	$1.96x10^2$	$2.95x10^2$	$3.93x10^2$	$5.89x10^2$	$7.85x10^2$	$9.82x10^2$	$1.18x10^3$	$1.37x10^3$	$1.57x10^3$	$1.77x10^3$	$1.96x10^3$
	Pull	-	$1.65x10^2$	$2.47x10^2$	$3.30x10^2$	$4.95x10^2$	$6.60x10^2$	$8.25x10^2$	$9.90x10^2$	$1.15x10^3$	$1.32x10^3$	$1.48x10^3$	$1.65x10^3$
ø63	Push	$1.56x10^2$	$3.12x10^2$	$4.68x10^2$	$6.23x10^2$	$9.35x10^2$	$1.25x10^3$	$1.56x10^3$	$1.87x10^3$	$2.18x10^3$	$2.49x10^3$	$2.81x10^3$	$3.12x10^3$
	Pull	$1.40x10^2$	$2.80x10^2$	$4.20x10^2$	$5.61x10^2$	$8.41x10^2$	$1.12x10^3$	$1.40x10^3$	$1.68x10^3$	$1.96x10^3$	$2.24x10^3$	$2.52x10^3$	$2.80x10^3$
ø80	Push	$2.51x10^2$	$5.03x10^2$	$7.54x10^2$	$1.01x10^3$	$1.51x10^3$	$2.01x10^3$	$2.51x10^3$	$3.02x10^3$	$3.52x10^3$	$4.02x10^3$	$4.52x10^3$	$5.03x10^3$
	Pull	$2.27x10^2$	$4.54x10^2$	$6.80x10^2$	$9.07x10^2$	$1.36x10^3$	$1.81x10^3$	$2.27x10^3$	$2.72x10^3$	$3.17x10^3$	$3.63x10^3$	$4.08x10^3$	$4.54x10^3$
ø100	Push	$3.93x10^2$	$7.85x10^2$	$1.18x10^3$	$1.57x10^3$	$2.36x10^3$	$3.14x10^3$	$3.93x10^3$	$4.71x10^3$	$5.50x10^3$	$6.28x10^3$	$7.07x10^3$	$7.85x10^3$
	Pull	$3.57x10^2$	$7.15x10^2$	$1.07x10^3$	$1.43x10^3$	$2.14x10^3$	$2.86x10^3$	$3.57x10^3$	$4.29x10^3$	$5.00x10^3$	$5.72x10^3$	$6.43x10^3$	$7.15x10^3$

SCP*3
CMK2
CMA2
SCM
SCG
SCA2
SCS2
CKV2
CAV2/COVP/N2
SSD2
SSG
SSD
CAT
MDC2
MVC
SMG
MSD/MSDG
FC*
STK
SRL3
SRG3
SRM3
SRT3
MRL2
MRG2
SM-25
ShkAbs
FJ
FK
Spd Contr
Ending

How to order

No switch (without magnet for switch)

SSD2-K - 12 ◯ - 10 ———— N - LB - I

With switch (built-in magnet for switch)

SSD2-KL - 12 ◯ - 10 - T0H - R - N - LB - I

- Ⓐ Bore size
- Ⓑ Port thread
- Ⓒ Stroke
- Ⓓ Switch model No. *1 *2 *3 *8 *9
- Ⓔ Switch quantity
- Ⓕ Option *4
- Ⓖ Mounting bracket *5 *6
- Ⓗ Accessory *7

Precautions for model No. selection

1 : The T2YD switch cannot be mounted on the ø12 and ø16 bore sizes.
2 : The T8 switch cannot be mounted on ø12 and ø16.
*3 : The F-switch can only be mounted on the piping port surface of bore sizes ø20 and ø25.
*4 : Piston rod of ø12 to ø25 is stainless steel as standard. C-snap ring is stainless steel instead of steel. The rod end male thread nut is stainless steel.
*5 : The mounting bracket is included at shipment.
*6 : The projection dimension of piston rod WF when LB or FA is selected is different from that of the standard. Refer to the dimensions on pages 783, 785, 787, 789 and 790. The number of the specified protruding dimension will be added at the end of the model No. printed on the metal plate on the body.
*7 : "I" and "Y" cannot be selected together.
*8 : The F-switch with L type lead wire on ø20 models cannot be selected on strokes 10 mm or under.
*9 : Switches are shipped with the product. Contact CKD if assembling before shipment is necessary.
*10 : Refer to pages 750 and 751 for combinations of variations/options.
*11 : F-switch cannot be selected.

[Example of model No.]

SSD2-KL-12-10-T0H-R-N

Model: Compact cylinder, high load

- Ⓐ Bore size : ø12 mm
- Ⓑ Port thread : Rc thread
- Ⓒ Stroke : 10mm
- Ⓓ Switch model No. : Reed T0H switch
  - · Lead wire 1 m
- Ⓔ Switch quantity : 1 on rod side
- Ⓕ Option : Rod end male thread

Code	Description
Ⓐ Bore size (mm)	
12	ø12
16	ø16
20	ø20
25	ø25
32	ø32
40	ø40
50	ø50
63	ø63
80	ø80
100	ø100
Ⓑ Port thread	
Blank	Rc thread
NN	NPT thread (ø32 and over) (made-to-order product)
GN	G thread (ø32 and over) (made-to-order product)
Ⓒ Stroke (mm)	
Refer to the stroke table on the following page.	

Ⓓ Switch model No.

Lead wire Straight	Lead wire L-shaped	Contact	Voltage AC	Voltage DC	Indicator	Lead wire	Bore size 12	16	20	25	32	40	50	63	80	100
-	F2S*	Proximity		●	1-color LED	2-wire			●	●						
-	F3S*	Proximity		●	1-color LED	3-wire			●	●						
F2H*	F2V*	Proximity		●	1-color LED	2-wire			●	●						
F3H*	F3V*	Proximity		●	1-color LED	3-wire			●	●						
F3PH*	F3PV*	Proximity		●	1-color LED (PNP output) (custom)	3-wire			●	●						
F2YH*	F2YV*	Proximity		●	2-color LED	2-wire			●	●						
F3YH*	F3YV*	Proximity		●	2-color LED	3-wire			●	●						
T0H*	T0V*	Reed	●	●	1-color LED	2-wire	●	●	●	●	●	●	●	●	●	●
T5H*	T5V*	Reed	●	●	No indicator lamp	2-wire	●	●	●	●	●	●	●	●	●	●
T8H*	T8V*	Reed	●	●	1-color LED	2-wire						●	●	●	●	●
T1H*	T1V*	Proximity	●		1-color LED	2-wire			●	●	●	●	●	●	●	●
T2H*	T2V*	Proximity		●	1-color LED	2-wire	●	●	●	●	●	●	●	●	●	●
T3H*	T3V*	Proximity		●	1-color LED (PNP output)	3-wire	●	●	●	●	●	●	●	●	●	●
T3PH*	T3PV*	Proximity		●	1-color LED (PNP output)	3-wire	●	●	●	●	●	●	●	●	●	●
T2WH*	T2WV*	Proximity		●	2-color LED	2-wire	●	●	●	●	●	●	●	●	●	●
T2YH*	T2YV*	Proximity		●	2-color LED	2-wire			●	●	●	●	●	●	●	●
T3WH*	T3WV*	Proximity		●	2-color LED	3-wire	●	●	●	●	●	●	●	●	●	●
T3YH*	T3YV*	Proximity		●	2-color LED	3-wire			●	●	●	●	●	●	●	●
T2YD*	-	Proximity		●	2-color LED AC magnetic field	2-wire			●	●	●	●	●	●	●	●
T2YDT*	-	Proximity		●	2-color LED AC magnetic field	2-wire			●	●	●	●	●	●	●	●
T2JH*	T2JV*	Proximity		●	1-color LED off-delay	2-wire			●	●	●	●	●	●	●	●

* Lead wire length	
Blank	1 m (standard)
3	3 m (option)
5	5 m (option) *11

Ⓔ Switch quantity	
R	1 on rod side
H	1 on head side
D	2

Ⓕ Option

Bore size (ø)		12	16	20	25	32	40	50	63	80	100
Blank	Rod end female thread	●	●	●	●	●	●	●	●	●	●
N	Rod end male thread	●	●	●	●	●	●	●	●	●	●
M *4	Piston rod material (stainless steel)	●	●	●	●	●	●	●	●	●	●
P6	Copper and PTFE free	Standard		●	●	●	●	●	●	●	●
S	Dedicated unit for custom stroke	●	●	●	●	●	●	●	●	●	●
P4	Specifications for rechargeable battery	●	●	●	●	●	●	●	●	●	●
P40	Specifications for rechargeable battery	●	●	●	●	●	●	●	●	●	●

Ⓖ Mounting bracket	
Blank	Without mounting bracket
LB	Axial foot
CB	Clevis bracket (pin and snap ring included)
FA	Rod side flange
FB	Head side flange

Ⓗ Accessory (available when rod end male thread "N" is selected)	
I	Rod eye
Y	Rod clevis (pin and snap ring included)

[Stroke table]

Stroke (mm)		Applicable bore size									
		12	16	20	25	32	40	50	63	80	100
Standard stroke	5	●	●	●	●	●	●				
	10	●	●	●	●	●	●	●	●	●	●
	15	●	●	●	●	●	●	●	●	●	●
	20	●	●	●	●	●	●	●	●	●	●
	25	●	●	●	●	●	●	●	●	●	●
	30	●	●	●	●	●	●	●	●	●	●
	35			●	●	●	●	●	●	●	●
	40			●	●	●	●	●	●	●	●
	45			●	●	●	●	●	●	●	●
	50			●	●	●	●	●	●	●	●
	75					●	●	●	●	●	●
	100					●	●	●	●	●	●

1: Less than 5 mm with 1-color LED switch and less than 10 mm with the 2-color LED, off-delay, AC magnetic field proof, T1 or T8* switch are not available.
Refer to page 776 for the min. stroke with switch.
*2 : The total length is the same as that of the next longer standard stroke.
*3: Refer to page 789 for the min. stroke with mounting bracket LB.

How to order switch

SW - T0H

Switch model No.
(Item Ⓓ on page 778)

Cylinder weight table

(the weight of the switches is when there are 2 cylinder switches.) (Unit: g)

Stroke (mm)	5		10		15		20		25		30		35		40		45		50		75		100	
Bore size (mm)	No switch	Switch	No switch	Switch	No switch	Switch	No switch	Switch	No switch	Switch	No switch	Switch	No switch	Switch	No switch	Switch	No switch	Switch	No switch	Switch	No switch	Switch	No switch	Switch
ø12	44	86	53	95	61	103	70	112	78	121	87	129	-	-	-	-	-	-	-	-	-	-	-	-
ø16	59	104	69	114	80	125	91	136	102	147	113	158	-	-	-	-	-	-	-	-	-	-	-	-
ø20	75	150	88	163	101	176	113	188	126	201	138	213	151	226	163	238	176	251	188	263	-	-	-	-
ø25	102	193	118	209	134	225	150	241	165	256	182	273	198	289	214	305	230	321	246	337	-	-	-	-
ø32	167	281	188	302	209	323	231	345	253	367	275	389	297	411	318	432	340	454	361	475	534	583	642	690
ø40	236	379	263	406	290	433	316	459	342	485	369	512	396	539	422	565	449	592	475	618	702	751	834	883
ø50	-	-	425	619	467	661	510	704	553	747	594	788	636	830	678	872	720	914	762	956	1109	1166	1319	1376
ø63	-	-	617	896	672	951	727	1006	782	1061	838	1117	893	1172	948	1227	1003	1282	1058	1337	1548	1612	1823	1887
ø80	-	-	1101	1514	1188	1601	1274	1687	1361	1774	1448	1861	1535	1948	1621	2034	1708	2121	1794	2207	2574	2640	3006	3072
ø100	-	-	1660	2227	1774	2341	1888	2455	2002	2569	2115	2682	2229	2796	2343	2910	2457	3024	2571	3138	3636	3708	4206	4278

How to order mounting bracket

Bore size (mm) / Mounting bracket	ø12	ø16	ø20	ø25	ø32	ø40	ø50	ø63	ø80	ø100
Foot (LB)	SSD2-LB-12	SSD2-LB-16	SSD2-LB-20	SSD2-LB-25	SSD2-LB-32	SSD2-LB-40	SSD2-LB-50	SSD2-LB-63	SSD2-LB-80	SSD2-LB-100
Flange (FA/FB)	SSD2-FA-12	SSD2-FA-16	SSD2-FA-20	SSD2-FA-25	SSD2-FA-32	SSD2-FA-40	SSD2-FA-50	SSD2-FA-63	SSD2-FA-80	SSD2-FA-100
Clevis bracket (CB)	SSD2-CB-12	SSD2-CB-16	SSD2-CB-20	SSD2-CB-25	SSD2-CB-32	SSD2-CB-40	SSD2-CB-50	SSD2-CB-63	SSD2-CB-80	SSD2-CB-100

*1: The foot mounting bracket is provided as 2 pcs./set.

Specifications for rechargeable battery

(catalog No. CC-1226A)

● Design compatible with rechargeable battery manufacturing process

SSD2-K-----**P4***

Internal structure and parts list

● SSD2-KL-12 to 25 (double acting/single rod/with switch)

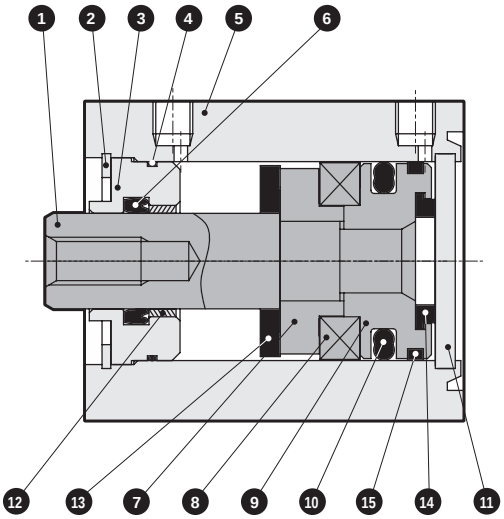

● SSD2-KL-32 (double acting/single rod high load/with switch)

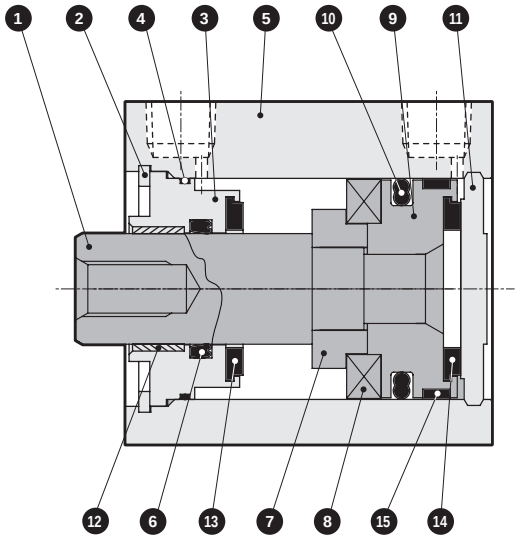

● SSD2-K-12 to 25 (double acting/single rod high load)

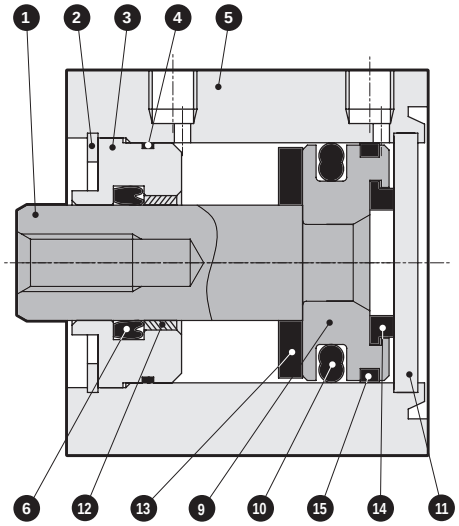

● SSD2-K-32 (double acting/single rod high load)

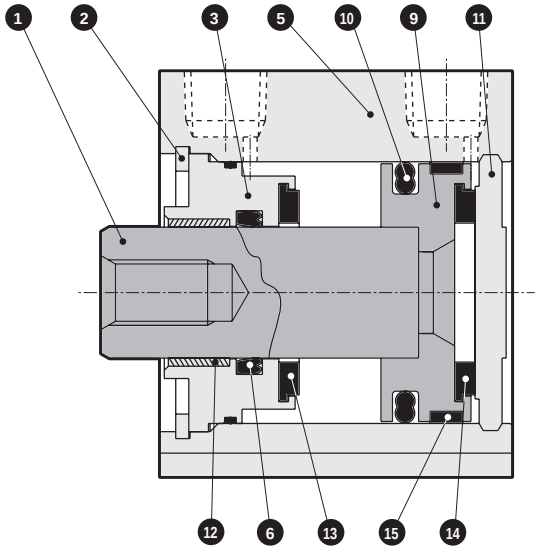

No.	Part name	Material	Remarks
1	Piston rod	ø12 to ø25: Stainless steel ø32: Steel	ø16 to ø32 Industrial chrome plating
2	C-snap ring	Steel	Zinc phosphate
3	Rod metal	Special aluminum	Alumite (*2)
4	Rod metal gasket	Nitrile rubber	
5	Body	Aluminum alloy	Hard alumite
6	Rod packing	Nitrile rubber	
7	Spacer	Aluminum alloy	Chromate
8	Magnet	Plastic	

No.	Part name	Material	Remarks
9	Piston	Aluminum alloy	Chromate
10	Piston packing	Nitrile rubber	
11	Cover	ø12 to ø25: Stainless steel ø32: Aluminum alloy	ø32: Alumite
12	Bush	Oiles drymet	ø20 to ø32 (*1)
13	Cushion rubber (R)	Urethane rubber	
14	Cushion rubber (H)	Urethane rubber	
15	Wear ring	Polyacetal resin	

*1: Material is steel for copper and PTFE free specifications.
*2: Chromate-coated for ø32.

Repair parts list

Bore size (mm)	Kit No.	Repair parts No.
ø12	SSD2-K-12K	4 6 10 13 14 15
ø16	SSD2-K-16K	
ø20	SSD2-K-20K	
ø25	SSD2-K-25K	
ø32	SSD2-K-32K	

Internal structure and parts list

● SSD2-KL-40 to 100 (double acting/single rod/with switch)

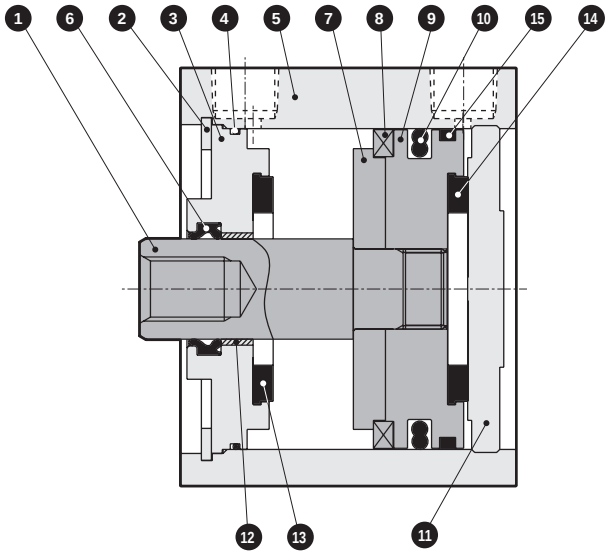

● SSD2-K-40 to 100 (double acting/single rod high load)

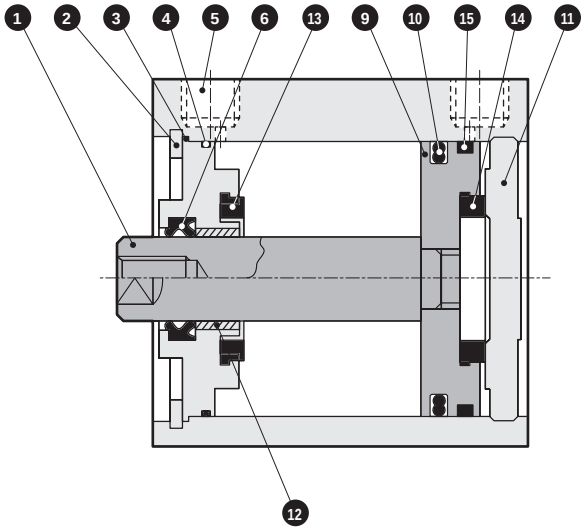

No.	Part name	Material	Remarks	No.	Part name	Material	Remarks
1	Piston rod	Steel	Industrial chrome plating	9	Piston	Aluminum alloy	Chromate
2	C-snap ring	Steel	Zinc phosphate	10	Piston packing	Nitrile rubber	
3	Rod metal	Aluminum alloy	Alumite (*2)	11	Cover	Aluminum alloy	Alumite
4	Rod metal gasket	Nitrile rubber		12	Bush	Oiles drymet	*1
5	Body	Aluminum alloy	Hard alumite	13	Cushion rubber (R)	Urethane rubber	
6	Rod packing	Nitrile rubber		14	Cushion rubber (H)	Urethane rubber	
7	Spacer	Aluminum alloy		15	Wear ring	Polyacetal resin	
8	Magnet	Plastic					

*1: Material is steel for copper and PTFE free specifications.
*2: Chromate-coated for ø40 and ø50.

Repair parts list

Bore size (mm)	Kit No.	Repair parts No.
ø40	SSD2-K-40K	4 6 10 13 14 15
ø50	SSD2-K-50K	
ø63	SSD2-K-63K	
ø80	SSD2-K-80K	
ø100	SSD2-K-100K	

SCP*3
CMK2
CMA2
SCM
SCG
SCA2
SCS2
CKV2
CAV2/COVP/N2
SSD2
SSG
SSD
CAT
MDC2
MVC
SMG
MSD/MSDG
FC*
STK
SRL3
SRG3
SRM3
SRT3
MRL2
MRG2
SM-25
ShkAbs
FJ
FK
Spd Contr
Ending

Dimensions

● SSD2-KL-12 to 25 (with switch)

ø12/ø16

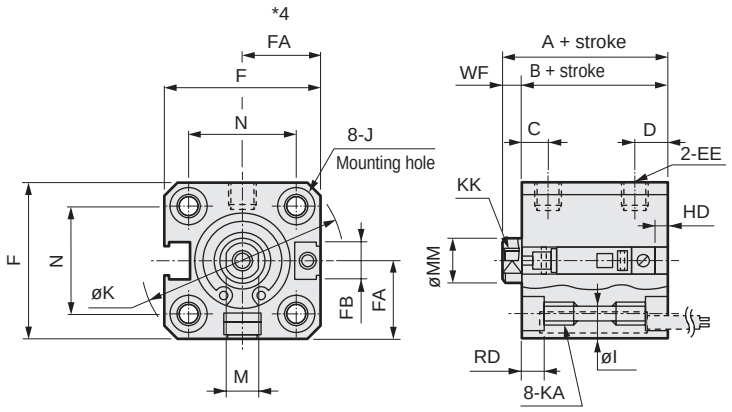

● Rod end male thread

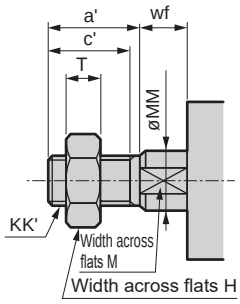

ø20/ø25

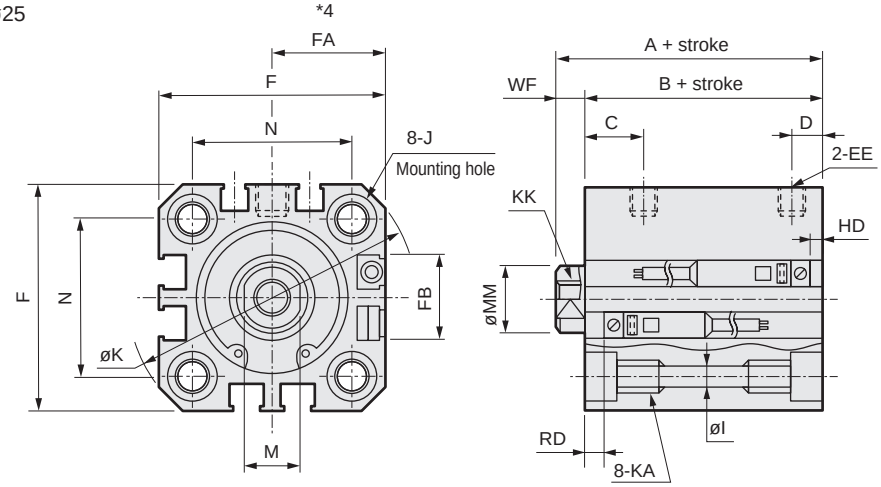

· Precautions regarding the switch mounting groove
*1: Only F-switch is available for the ø20 or ø25 piping port surface.

Code / Bore size (mm)	Common dimensions with switch																
	A *1	B *1	C	D	EE	F	FA *3	FB	I	J	K	KA	KK	M	MM	N	WF
ø12	30.5	27	5.5	5.5	M5	25	13(16.5)	4.5	3.5	6.5 spot face depth 3.5	32	M4 depth 7	M3 depth 6	5	6	15.5	3.5
ø16	30.5	27	5.5	5.5	M5	29	15(18.5)	4.5	3.5	6.5 spot face depth 3.5	38	M4 depth 7	M4 depth 8	6	8	20	3.5
ø20	39	34.5	8	5.5	M5	36	18.5(22)	12.5	5.5	9 spot face depth 5.5	47	M6 depth 11	M5 depth 7	8	10	25.5	4.5
ø25	42.5	37.5	11	6	M5	40	20.5(24)	13.5	5.5	9 spot face depth 5.5	51	M6 depth 11	M6 depth 12	10	12	28	5

Switch dimensions	Reed T0H/T0V, T5H/T5V		Proximity T2H/T2V, T3H/T3V		Proximity T2WH/T2WV, T3WH T3WV		Proximity F2H/F2V, F3H/F3V, F2YH/F2YV, F3YH/F3YV		Proximity F2S/F3S	
Bore size (mm)	HD	RD	HD	RD	HD	RD	HD	RD	HD	RD
ø12	4.5	3.5	4.5	3.5	6.5	5.5				
ø16	3	5	3	5	5	7				
ø20	6.5	9	6.5	9	8.5	11	11	13.5	10	12.5
ø25	6	12.5	6	12.5	8	14.5	10.5	17	9.5	16

*1 : To calculate A + stroke or B + stroke when using custom stroke, apply the next longer standard stroke (instead of the custom stroke) to the stroke value.
(Example) If the custom stroke is 7 mm, apply the standard stroke of 10 mm.
· For ø16: A + stroke = 40.5 B + stroke = 37
When you have selected "S" (dedicated unit for custom stroke), apply the custom stroke of 7 mm.
· For ø16: A + stroke = 37.5 B + stroke = 34

2 : Refer to page 1045 for HD and RD dimensions of the 2-color LED, off-delay, AC magnetic field tolerant, T1 and T8* switches.
3 : Refer to page 1045 for protruding dimensions of the 2-color LED, off-delay, AC magnetic field tolerant, T1 and T8* switches.
*4 : Dimensions in ( ) of FA are for the L-shaped lead wire.
*5 : For dimensions of individual accessories, refer to pages 1046 to 1049.

● Dimensions of rod end male thread part

Code / Bore size (mm)	a'	c'	H	kk'	M	MM	T	wf
ø12	10.5	9	8	M5	5	6	3.2	3.5
ø16	12	10	10	M6	6	8	3.6	3.5
ø20	14	12	13	M8	8	10	5	4.5
ø25	17.5	15	17	M10x1.25	10	12	6	5

Dimensions with mounting bracket

CAD

● Axial foot (LB) with switch
SSD2-KL-12 to 25 -LB

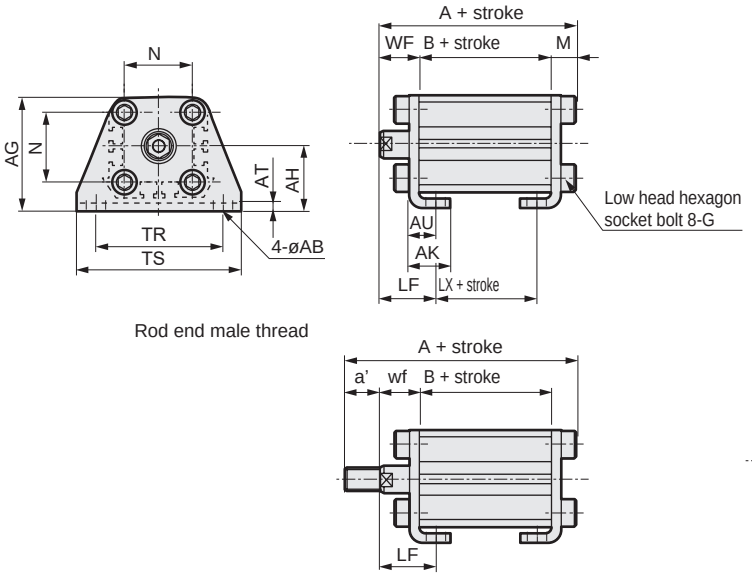

Code	Common dimensions										
Bore size (mm)	AB	AG	AH	AK	AT	AU	G	N	TR	TS	M
ø12	5	29.5	17	12.5	2	8	M4x10	15.5	34	44	4.8
ø16	5	33.5	19	13	2	8	M4x10	20	38	48	4.8
ø20	7	42	24	15	3.2	9.2	M6x16	25.5	48	62	7.2
ø25	7	46	26	16.5	3.2	10.7	M6x16	28	52	66	7.2

Code	Male thread										
Bore size (mm)	WF	LF	A	B	LX	a'	wf	LF	A	B	LX
ø12	13.5	19.5	45.3	27	15	10.5	13.5	19.5	55.8	27	15
ø16	13.5	19.5	45.3	27	15	12	13.5	19.5	57.3	27	15
ø20	14.5	20.5	56.2	34.5	22.5	14	14.5	20.5	70.2	34.5	22.5
ø25	15	22.5	59.7	37.5	22.5	17.5	15	22.5	77.2	37.5	22.5

● Clevis bracket (CB) with switch
SSD2-KL-12 to 25 -CB

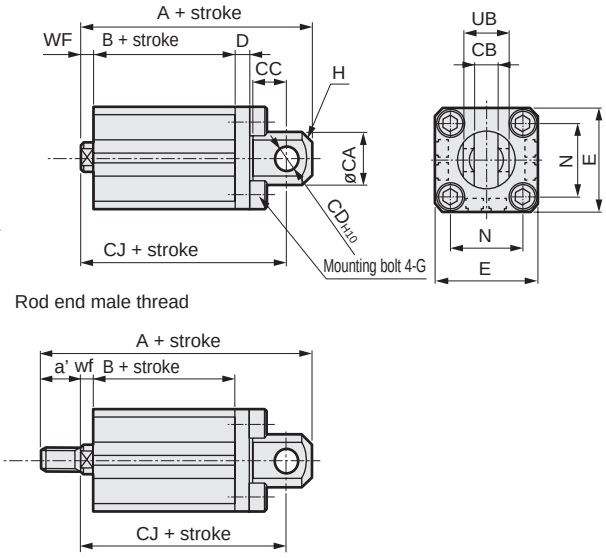

Code	Common dimensions									
Bore size (mm)	CA	CB	CC	CD	D	E	G	H	N	UB
ø12	12	$5.2^{+0.2}_{0}$	7	5	4	25	M4x12	C1.5	15.5	$10^{-0.1}_{-0.3}$
ø16	15	$6.6^{+0.3}_{0}$	8	5	5	29	M4x12	C2	20	$12^{-0.1}_{-0.4}$
ø20	20	$8.2^{+0.2}_{0}$	12	8	5	36	M6x16	C4	25.5	$16^{-0.1}_{-0.3}$
ø25	24	$10.2^{+0.2}_{0}$	14	10	5	40	M6x16	C5	28	$20^{-0.1}_{-0.3}$

Code	Female thread				Male thread				
Bore size (mm)	WF	A	B	CJ	a'	wf	A	B	CJ
ø12	3.5	50.5	27	44.5	10.5	3.5	61	27	44.5
ø16	3.5	51.5	27	45.5	12	3.5	63.5	27	45.5
ø20	4.5	66	34.5	57	14	4.5	80	34.5	57
ø25	5	72.5	37.5	62.5	17.5	5	90	37.5	62.5

● Rod side flange (FA) with switch
SSD2-KL-12 to 25 -FA

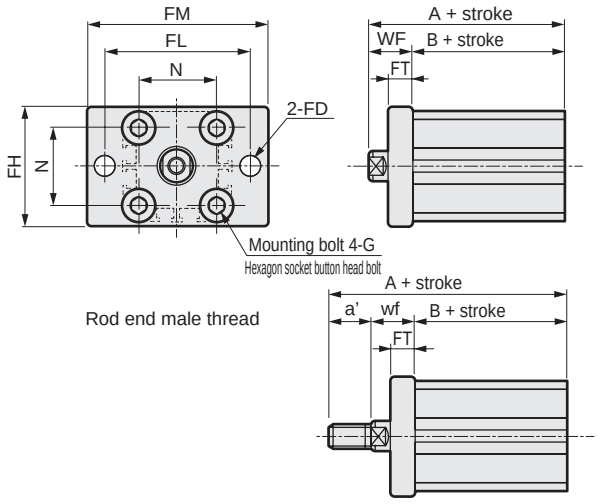

Code	Common dimensions						
Bore size (mm)	FD	FH	FL	FM	FT	N	G
ø12	4.5	25	45	55	5.5	15.5	M4x12
ø16	4.5	30	45	55	5.5	20	M4x12
ø20	6.6	39	48	60	8	25.5	M6x16
ø25	6.6	42	52	64	8	28	M6x16

Code	Female thread			Male thread			
Bore size (mm)	WF	A	B	a'	wf	A	B
ø12	13.5	40.5	27	10.5	13.5	51	27
ø16	13.5	40.5	27	12	13.5	52.5	27
ø20	14.5	49	34.5	14	14.5	63	34.5
ø25	15	52.5	37.5	17.5	15	70	37.5

● Head side flange (FB) with switch
SSD2-KL-12 to 25 -FB

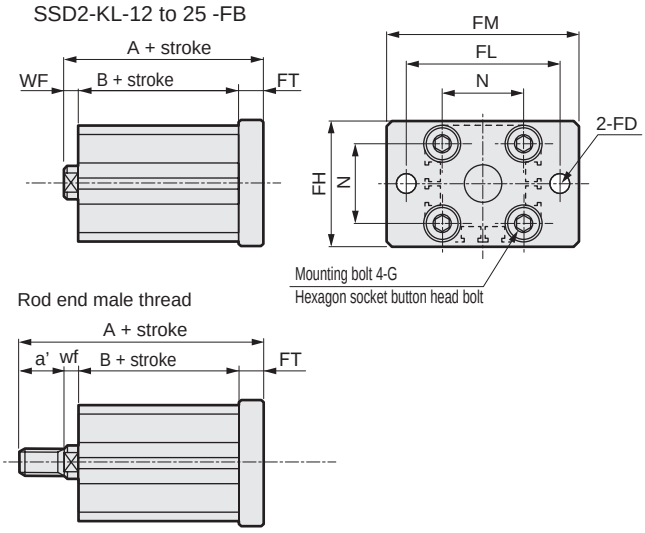

Code	Common dimensions						
Bore size (mm)	FD	FH	FL	FM	FT	N	G
ø12	4.5	25	45	55	5.5	15.5	M4x12
ø16	4.5	30	45	55	5.5	20	M4x12
ø20	6.6	39	48	60	8	25.5	M6x16
ø25	6.6	42	52	64	8	28	M6x16

Code	Female thread			Male thread			
Bore size (mm)	WF	A	B	a'	wf	A	B
ø12	3.5	36	27	10.5	3.5	46.5	27
ø16	3.5	36	27	12	3.5	48	27
ø20	4.5	47	34.5	14	4.5	61	34.5
ø25	5	50.5	37.5	17.5	5	68	37.5

SCP*3
CMK2
CMA2
SCM
SCG
SCA2
SCS2
CKV2
CAV2/COVP/N2
SSD2
SSG
SSD
CAT
MDC2
MVC
SMG
MSD/MSDG
FC*
STK
SRL3
SRG3
SRM3
SRT3
MRL2
MRG2
SM-25
ShkAbs
FJ
FK
Spd Contr
Ending

Dimensions

● SSD2-K-12 to 25 (without switch)

ø12/ø16

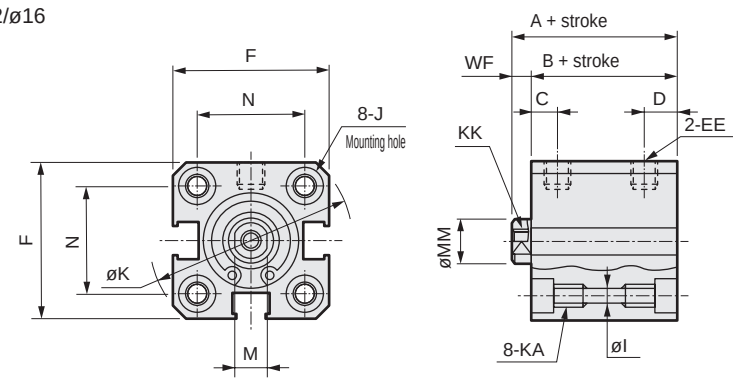

● Rod end male thread

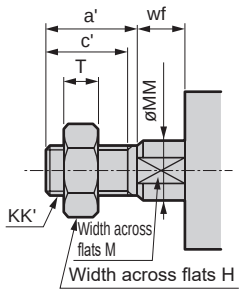

ø20/ø25

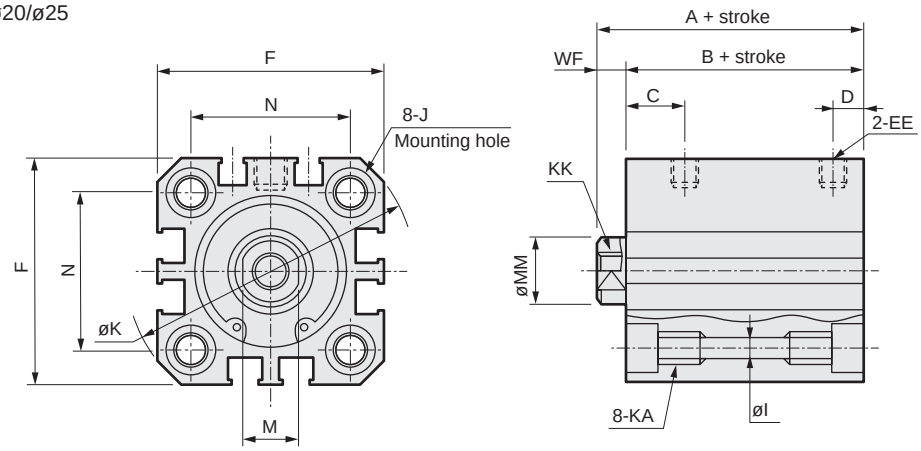

Code / Bore size (mm)	Dimensions without switch and common dimensions														
	A *1	B *1	C	D	EE	F	I	J	K	KA	KK	M	MM	N	WF
ø12	25.5	22	5.5	5.5	M5	25	3.5	6.5 spot face depth 3.5	32	M4 depth 7	M3 depth 6	5	6	15.5	3.5
ø16	25.5	22	5.5	5.5	M5	29	3.5	6.5 spot face depth 3.5	38	M4 depth 7	M4 depth 8	6	8	20	3.5
ø20	29	24.5	8	5.5	M5	36	5.5	9 spot face depth 5.5	47	M6 depth 11	M5 depth 7	8	10	25.5	4.5
ø25	32.5	27.5	11	6	M5	40	5.5	9 spot face depth 5.5	51	M6 depth 11	M6 depth 12	10	12	28	5

*1 : To calculate A+ stroke or B+ stroke when using custom stroke, apply the next longer standard stroke (instead of the custom stroke) to the stroke value.
(Example) If the custom stroke is 7 mm, apply the standard stroke of 10 mm.
· For ø16: A + stroke = 35.5 B + stroke = 32
When you have selected "S" (dedicated unit for custom stroke), apply the custom stroke of 7 mm.
· For ø16: A + stroke = 32.5 B + stroke = 29

*2 : For dimensions with accessories and of individual accessories, refer to pages 1046 to 1049.

● Dimensions of rod end male thread part

Code / Bore size (mm)	a'	c'	H	kk'	M	MM	T	wf
ø12	10.5	9	8	M5	5	6	3.2	3.5
ø16	12	10	10	M6	6	8	3.6	3.5
ø20	14	12	13	M8	8	10	5	4.5
ø25	17.5	15	17	M10x1.25	10	12	6	5

Dimensions with mounting bracket

CAD

● Axial foot (LB) without switch
SSD2-K-12 to 25 -LB

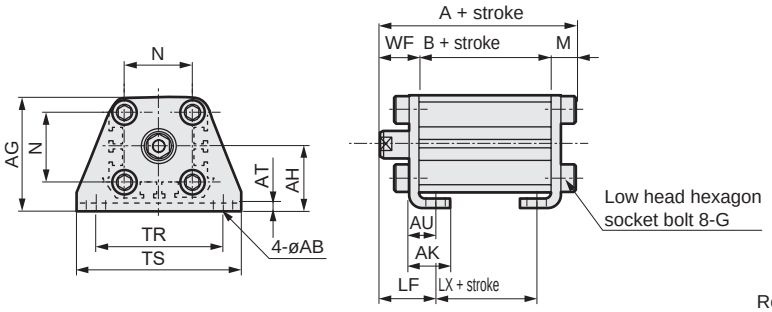

Rod end male thread

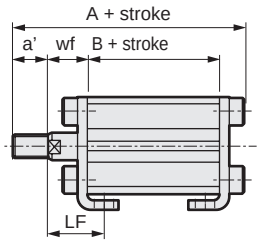

● Clevis bracket (CB) without switch
SSD2-K-12 to 25 -CB

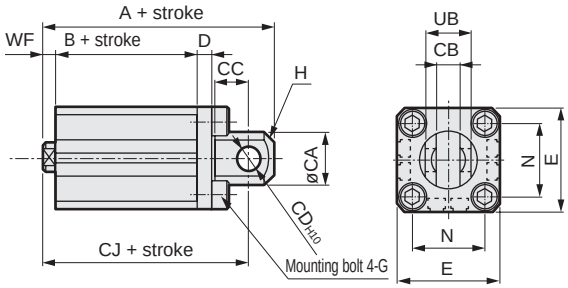

Rod end male thread

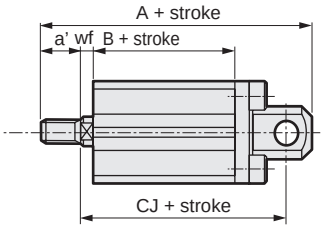

Code	Common dimensions						Female thread				
Bore size (mm)	AB	AG	AH	AK	AT	AU	G	N	TR	TS	M
ø12	5	29.5	17	12.5	2	8	M4x10	15.5	34	44	4.8
ø16	5	33.5	19	13	2	8	M4x10	20	38	48	4.8
ø20	7	42	24	15	3.2	9.2	M6x16	25.5	48	62	7.2
ø25	7	46	26	16.5	3.2	10.7	M6x16	28	52	66	7.2

Code	Male thread										
Bore size (mm)	WF	LF	A	B	LX	a'	wf	LF	A	B	LX
ø12	13.5	19.5	40.3	22	10	10.5	13.5	19.5	50.8	22	10
ø16	13.5	19.5	40.3	22	10	12	13.5	19.5	52.3	22	10
ø20	14.5	20.5	46.2	24.5	12.5	14	14.5	20.5	60.2	24.5	12.5
ø25	15	22.5	49.7	27.5	12.5	17.5	15	22.5	67.2	27.5	12.5

Code	Common dimensions									
Bore size (mm)	CA	CB	CC	CD	D	E	G	H	N	UB
ø12	12	$5.2^{+0.2}_{0}$	7	5	4	25	M4x12	C1.5	15.5	$10^{-0.1}_{-0.3}$
ø16	15	$6.6^{+0.3}_{0}$	8	5	5	29	M4x12	C2	20	$12^{-0.1}_{-0.4}$
ø20	20	$8.2^{+0.2}_{0}$	12	8	5	36	M6x16	C4	25.5	$16^{-0.1}_{-0.3}$
ø25	24	$10.2^{+0.2}_{0}$	14	10	5	40	M6x16	C5	28	$20^{-0.1}_{-0.3}$

Code	Female thread				Male thread				
Bore size (mm)	WF	A	B	CJ	a'	wf	A	B	CJ
ø12	3.5	45.5	22	39.5	10.5	3.5	56	22	39.5
ø16	3.5	46.5	22	40.5	12	3.5	58.5	22	40.5
ø20	4.5	56	24.5	47	14	4.5	70	24.5	47
ø25	5	62.5	27.5	52.5	17.5	5	80	27.5	52.5

● Rod side flange (FA) without switch
SSD2-K-12 to 25 -FA

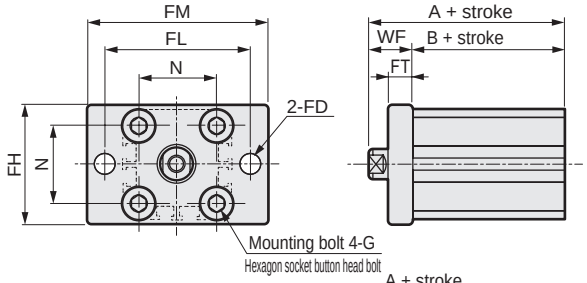

Rod end male thread

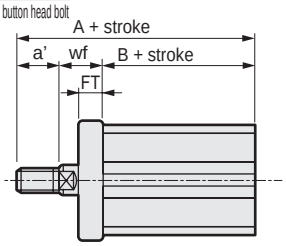

● Head side flange (FB) without switch
SSD2-K-12 to 25 -FB

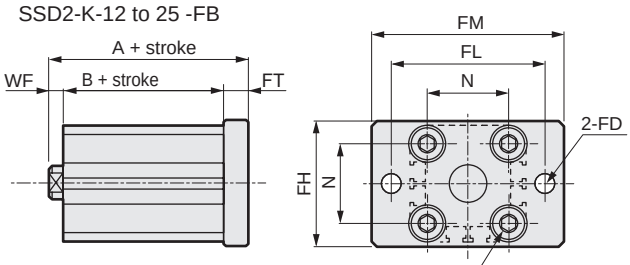

Rod end male thread

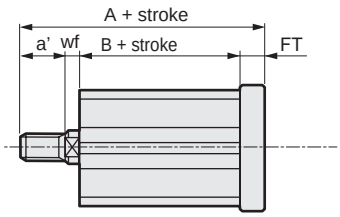

Code	Common dimensions						
Bore size (mm)	FD	FH	FL	FM	FT	N	G
ø12	4.5	25	45	55	5.5	15.5	M4x12
ø16	4.5	30	45	55	5.5	20	M4x12
ø20	6.6	39	48	60	8	25.5	M6x16
ø25	6.6	42	52	64	8	28	M6x16

Code	Female thread			Male thread			
Bore size (mm)	WF	A	B	a'	wf	A	B
ø12	13.5	35.5	22	10.5	13.5	46	22
ø16	13.5	35.5	22	12	13.5	47.5	22
ø20	14.5	39	24.5	14	14.5	53	24.5
ø25	15	42.5	27.5	17.5	15	60	27.5

Code	Common dimensions						
Bore size (mm)	FD	FH	FL	FM	FT	N	G
ø12	4.5	25	45	55	5.5	15.5	M4x12
ø16	4.5	30	45	55	5.5	20	M4x12
ø20	6.6	39	48	60	8	25.5	M6x16
ø25	6.6	42	52	64	8	28	M6x16

Code	Female thread			Male thread			
Bore size (mm)	WF	A	B	a'	wf	A	B
ø12	3.5	31	22	10.5	3.5	41.5	22
ø16	3.5	31	22	12	3.5	43	22
ø20	4.5	37	24.5	14	4.5	51	24.5
ø25	5	40.5	27.5	17.5	5	58	27.5

SCP*3
CMK2
CMA2
SCM
SCG
SCA2
SCS2
CKV2
CAV2/ COVP/N2
SSD2
SSG
SSD
CAT
MDC2
MVC
SMG
MSD/ MSDG
FC*
STK
SRL3
SRG3
SRM3
SRT3
MRL2
MRG2
SM-25
ShkAbs
FJ
FK
Spd Contr
Ending

Dimensions

● SSD2-KL-32 to 100 (with switch)

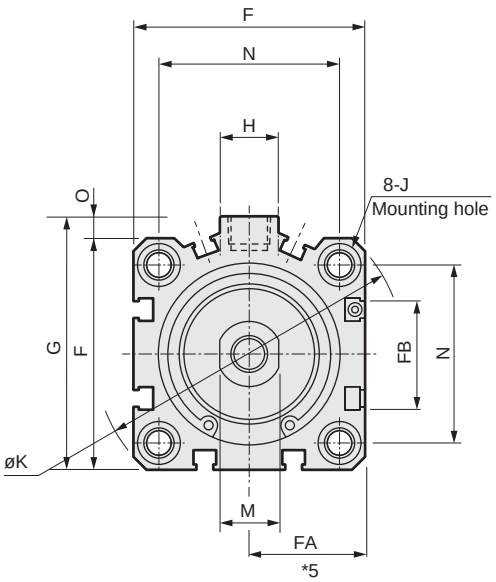

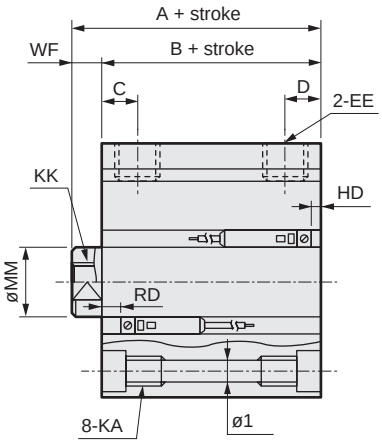

● Rod end male thread

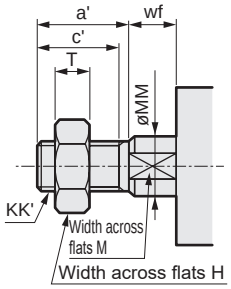

Code / Bore size (mm)	Common dimensions with switch																			
	A *1	B *1	C	D	EE	F	FA *5	FB	G	H	I	J	K	KA	KK	M	MM	N	O	WF
ø32	50	43	8	8	Rc1/8	45	23(26.5)	20.5	49.5	12.5	5.5	9 spot face depth 5.5	60	M6 depth 11	M8 depth 13	14	16	34	4.5	7
ø40	56.5	49.5	12	8.5	Rc1/8	52	26.5(30)	27.5	57	15	5.5	9 spot face depth 5.5	69	M6 depth 11	M8 depth 13	14	16	40	5	7
ø50	58.5	50.5	10.5	10.5	Rc1/4	64	32.5(36)	28.5	71	18	6.9	11 spot face depth 6.5	86	M8 depth 13	M10 depth 15	17	20	50	7	8
ø63	64	56	13	11	Rc1/4	77	39(42.5)	28.5	84	23	8.7	14 spot face depth 9	103	M10 depth 25	M10 depth 15	17	20	60	7	8
ø80	73.5	63.5	16	13	Rc3/8	98	49.5(53)	28.5	104	31	10.5	17.5 spot face depth 11	132	M12 depth 28	M16 depth 21	22	25	77	6	10
ø100	85	73	23	15	Rc3/8	117	59(62.5)	28.5	123.5	38	10.5	17.5 spot face depth 11	156	M12 depth 28	M20 depth 27	27	30	94	6.5	12

Switch dimensions	Reed T0H/T0V, T5H/T5V		Proximity T2H/T2V, T3H/T3V		Proximity T2WH/T2WV, T3WH/T3WV	
Bore size (mm)	HD	RD	HD	RD	HD	RD
ø32	9	15	9	15	11	17
ø40	9.5	19.5	9.5	19.5	11	21
ø50	10	20	10	20	11.5	21.5
ø63	17.5	18	17.5	18	19	19.5
ø80	22	20.5	22.5	20.5	24	22
ø100	28	24.5	28	24.5	29.5	26

*1 : To calculate A + stroke or B + stroke when using custom stroke, apply the next longer standard stroke (instead of the custom stroke) to the stroke value.
(Example) If the custom stroke is 7 mm, apply the standard stroke of 10 mm.
· For ø40: A + stroke = 60 B + stroke = 53
When you have selected "S" (dedicated unit for custom stroke), apply the custom stroke of 7 mm.
· For ø40: A + stroke = 57 B + stroke = 50
*2 : HD and RD dimensions for 5 mm stroke differ from these dimensions according to the setting.
3 : Refer to page 1045 for HD and RD dimensions of the 2-color LED, off-delay, AC magnetic field tolerant, T1 and T8* switches.
4 : Refer to page 1045 for protruding dimensions of the 2-color LED, off-delay, AC magnetic field tolerant, T1 and T8* switches.
*5 : Dimensions in ( ) of FA are for the L-shaped lead wire.
*6 : For dimensions with accessories and of individual accessories, refer to pages 1046 to 1049.

● Dimensions of rod end male thread part

Code / Bore size (mm)	a'	c'	H	kk'	M	MM	T	wf
ø32	23.5	20.5	22	M14x1.5	14	16	8	5
ø40	23.5	20.5	22	M14x1.5	14	16	8	5
ø50	28.5	26	27	M18x1.5	17	20	11	5
ø63	28.5	26	27	M18x1.5	17	20	11	5
ø80	35.5	32.5	32	M22x1.5	22	25	13	8
ø100	35.5	32.5	41	M26x1.5	27	30	16	8

Dimensions with mounting bracket

CAD

● Axial foot (LB) with switch
SSD2-KL-32 to 100 -LB

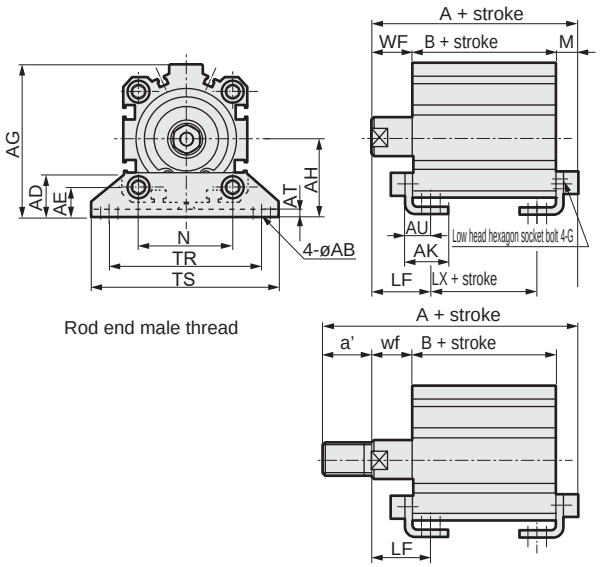

Code	Common dimensions						Female thread					
Bore size (mm)	AB	AD	AE	AG	AH	AK	AT	AU	G	N	TR	TS
ø32	7	18.5	13	57	30	17	3.2	11.2	M6x16	34	57	71
ø40	7	18	13	64	33	18.2	3.2	11.2	M6x16	40	64	78
ø50	9	22	14	78	39	22.7	3.2	14.7	M8x20	50	79	95
ø63	11	26	16	91.5	46	25.2	3.2	16.2	M10x25	60	95	113
ø80	13	31.5	20.5	114	59	30.5	4.5	19.5	M12x40	77	118	140
ø100	13	35	24	136	71	35.5	6	23	M12x40	94	137	162

Code	Male thread											
Bore size (mm)	M	WF	LF	A	B	LX	a'	wf	LF	A	B	LX
ø32	7.2	17	25	67.2	43	27	23.5	15	23	88.7	43	27
ø40	7.2	17	25	73.7	49.5	33.5	23.5	15	23	95.2	49.5	33.5
ø50	8.2	18	29.5	76.7	50.5	27.5	28.5	15	26.5	102.2	50.5	27.5
ø63	9.2	18	31	83.2	56	30	28.5	15	28	108.7	56	30
ø80	11.5	20	35	95	63.5	33.5	35.5	18	33	128.5	63.5	33.5
ø100	13	22	39	108	73	39	35.5	18	35	139.5	73	39

● Clevis bracket (CB) with switch
SSD2-KL-32 to 100 -CB

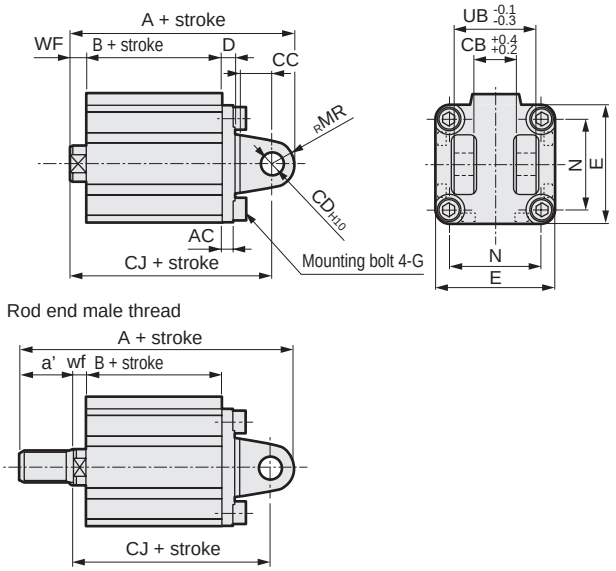

Code	Common dimensions									
Bore size (mm)	AC	CB	CC	CD	D	E	G	MR	N	UB
ø32	4.5	18.2	14	10	5	45	M6x16	10	34	36
ø40	5	18.2	14	10	6	52	M6x16	10	40	36
ø50	6	22.2	20	14	7	64	M8x20	14	50	44
ø63	7	22.2	20	14	8	77	M10x25	14	60	44
ø80	9	28.2	27	18	10	98	M12x40	18	77	56
ø100	12	32.2	31	22	13	117	M12x40	22	94	64

Code	Female thread				Male thread				
Bore size (mm)	WF	A	B	CJ	a'	wf	A	B	CJ
ø32	7	80	43	70	23.5	5	101.5	43	68
ø40	7	88.5	49.5	78.5	23.5	5	110	49.5	76.5
ø50	8	100.5	50.5	86.5	28.5	5	126	50.5	83.5
ø63	8	108	56	94	28.5	5	133.5	56	91
ø80	10	129.5	63.5	111.5	35.5	8	163	63.5	109.5
ø100	12	152	73	130	35.5	8	183.5	73	126

* A pin and a snap ring are included.

● Rod side flange (FA)
SSD2-KL-32 to 100 -FA

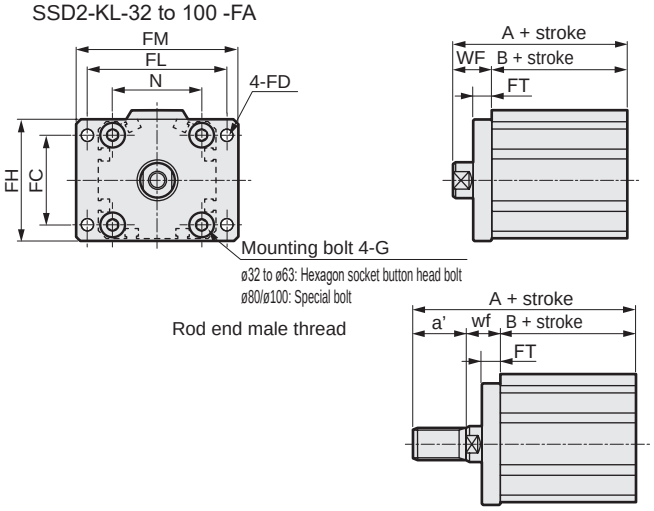

Code	Common dimensions							
Bore size (mm)	FC	FD	FH	FL	FM	FT	N	G
ø32	34	5.5	48	56	65	8	34	M6x16
ø40	40	5.5	54	62	72	8	40	M6x16
ø50	50	6.6	67	76	89	9	50	M8x20
ø63	60	9	80	92	108	9	60	M10x25
ø80	77	11	99	116	134	11	77	M12x40
ø100	94	11	117	136	154	11	94	M12x40

Code	Female thread			Male thread			
Bore size (mm)	WF	A	B	a'	wf	A	B
ø32	17	60	43	23.5	15	81.5	43
ø40	17	66.5	49.5	23.5	15	88	49.5
ø50	18	68.5	50.5	28.5	15	94	50.5
ø63	18	74	56	28.5	15	99.5	56
ø80	20	83.5	63.5	35.5	18	117	63.5
ø100	22	95	73	35.5	18	126.5	73

● Head side flange (FB)
SSD2-KL-32 to 100 -FB

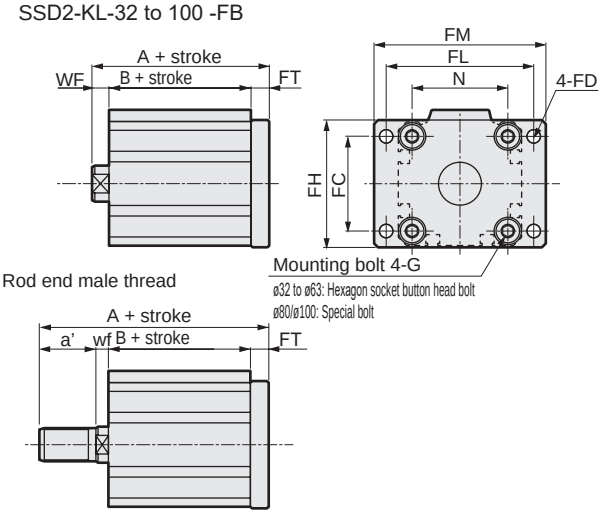

Code	Common dimensions							
Bore size (mm)	FC	FD	FH	FL	FM	FT	N	G
ø32	34	5.5	48	56	65	8	34	M6x16
ø40	40	5.5	54	62	72	8	40	M6x16
ø50	50	6.6	67	76	89	9	50	M8x20
ø63	60	9	80	92	108	9	60	M10x25
ø80	77	11	99	116	134	11	77	M12x40
ø100	94	11	117	136	154	11	94	M12x40

Code	Female thread			Male thread			
Bore size (mm)	WF	A	B	a'	wf	A	B
ø32	7	58	43	23.5	5	79.5	43
ø40	7	64.5	49.5	23.5	5	86	49.5
ø50	8	67.5	50.5	28.5	5	93	50.5
ø63	8	73	56	28.5	5	98.5	56
ø80	10	84.5	63.5	35.5	8	118	63.5
ø100	12	96	73	35.5	8	127.5	73

Dimensions

● SSD2-K-32 to 100 (without switch)

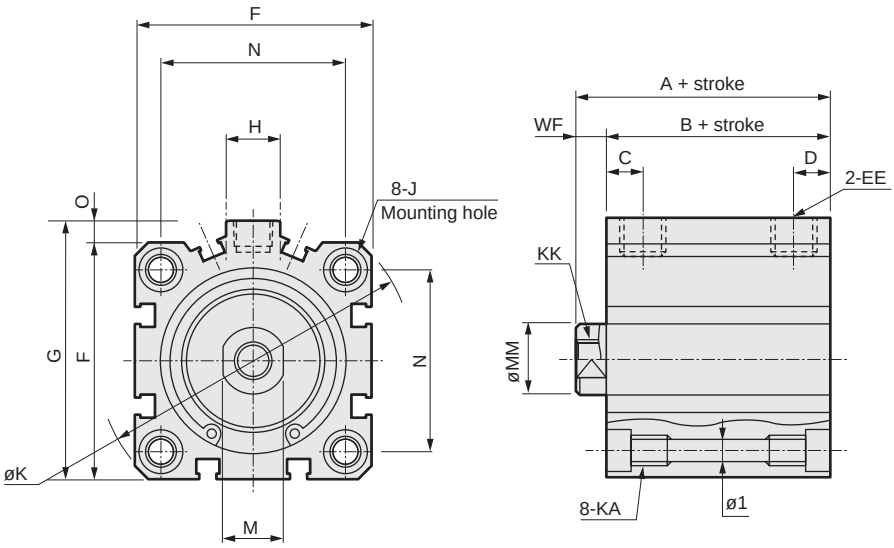

● Rod end male thread

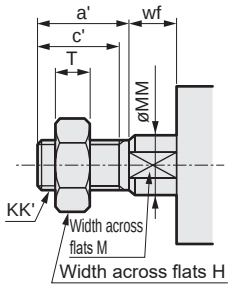

Code / Bore size (mm)	Dimensions without switch and common dimensions												
	A *1, *3	B *1, *3	C	D	EE	F	G	H	I	J	K	KA	KK
ø32	40(50)	33(43)	8	8	Rc1/8	45	49.5	12.5	5.5	9 spot face depth 5.5	60	M6 depth 11	M8 depth 13
ø40	46.5(56.5)	39.5(49.5)	12	8.5	Rc1/8	52	57	15	5.5	9 spot face depth 5.5	69	M6 depth 11	M8 depth 13
ø50	48.5(58.5)	40.5(50.5)	10.5	10.5	Rc1/4	64	71	18	6.9	11 spot face depth 6.5	86	M8 depth 13	M10 depth 15
ø63	54(64)	46(56)	13	11	Rc1/4	77	84	23	8.7	14 spot face depth 9	103	M10 depth 25	M10 depth 15
ø80	63.5(73.5)	53.5(63.5)	16	13	Rc3/8	98	104	31	10.5	17.5 spot face depth 11	132	M12 depth 28	M16 depth 21
ø100	75(85)	63(73)	23	15	Rc3/8	117	123.5	38	10.5	17.5 spot face depth 11	156	M12 depth 28	M20 depth 27

Code / Bore size (mm)	Dimensions without switch and common dimensions				
	M	MM	N	O	WF
ø32	14	16	34	4.5	7
ø40	14	16	40	5	7
ø50	17	20	50	7	8
ø63	17	20	60	7	8
ø80	22	25	77	6	10
ø100	27	30	94	6.5	12

*1 : To calculate A + stroke or B + stroke when using custom stroke, apply the next longer standard stroke (instead of the custom stroke) to the stroke value.
(Example) If the custom stroke is 7 mm, apply the standard stroke of 10 mm.
· For ø40: A + stroke = 50 B + stroke = 43
When you have selected "S" (dedicated unit for custom stroke), apply the custom stroke of 7 mm.
· For ø40: A + stroke = 47 B + stroke = 40
*2 : For dimensions of individual accessories, refer to pages 1046 to 1049.
*3 : Dimensions in ( ) of codes A and B are for strokes of more than 50 mm.

● Dimensions of rod end male thread part

Code / Bore size (mm)	a'	c'	H	kk'	M	MM	T	wf
ø32	23.5	20.5	22	M14x1.5	14	16	8	5
ø40	23.5	20.5	22	M14x1.5	14	16	8	5
ø50	28.5	26	27	M18x1.5	17	20	11	5
ø63	28.5	26	27	M18x1.5	17	20	11	5
ø80	35.5	32.5	32	M22x1.5	22	25	13	8
ø100	35.5	32.5	41	M26x1.5	27	30	16	8

Dimensions with mounting bracket

● Axial foot (LB) without switch
SSD2-K-32 to 100 -LB

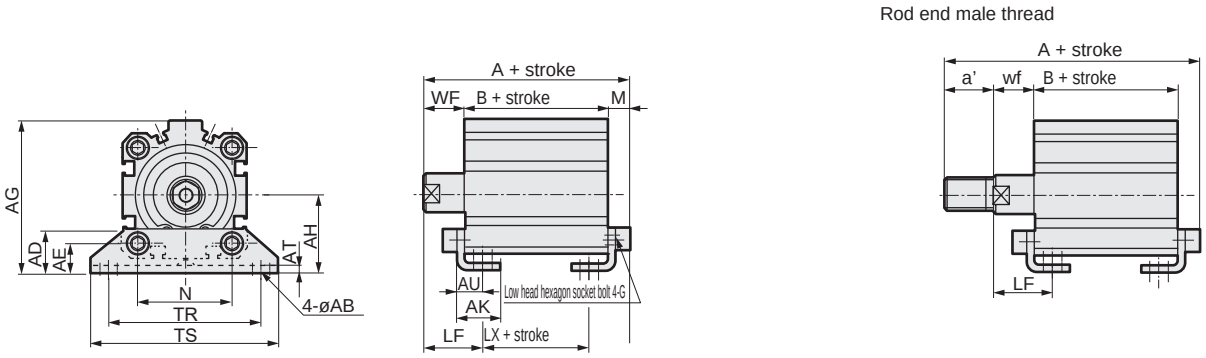

Code	Common dimensions						Female thread										
Bore size (mm)	AB	AD	AE	AG	AH	AK	AT	AU	G	N	TR	TS	M	WF	LF	A	B
ø32	7	18.5	13	57	30	17	3.2	11.2	M6x16	34	57	71	7.2	17	25	57.2(67.2)	33(43)
ø40	7	18	13	64	33	18.2	3.2	11.2	M6x16	40	64	78	7.2	17	25	63.7(73.7)	39.5(49.5)
ø50	9	22	14	78	39	22.7	3.2	14.7	M8x20	50	79	95	8.2	18	29.5	66.7(76.7)	40.5(50.5)
ø63	11	26	16	91.5	46	25.2	3.2	16.2	M10x25	60	95	113	9.2	18	31	73.2(83.2)	46(56)
ø80	13	31.5	20.5	114	59	30.5	4.5	19.5	M12x40	77	118	140	11.5	20	35	85(95)	53.5(63.5)
ø100	13	35	24	136	71	35.5	6	23	M12x40	94	137	162	13	22	39	98(108)	63(73)

Code		Male thread					
Bore size (mm)	LX	a'	wf	LF	A	B	LX
ø32	17(27)	23.5	15	23	78.7(88.7)	33(43)	17(27)
ø40	23.5(33.5)	23.5	15	23	85.2(95.2)	39.5(49.5)	23.5(33.5)
ø50	17.5(27.5)	28.5	15	26.5	92.2(102.2)	40.5(50.5)	17.5(27.5)
ø63	20(30)	28.5	15	28	98.7(108.7)	46(56)	20(30)
ø80	23.5(33.5)	35.5	18	33	118.5(128.5)	53.5(63.5)	23.5(33.5)
ø100	29(39)	35.5	18	35	129.5(139.5)	63(73)	29(39)

Note: ø80: LB cannot be selected for 15 mm stroke or less.

* Dimensions in ( ) are for strokes of more than 50 mm.

● Clevis bracket (CB) without switch
SSD2-K-32 to 100 -CB

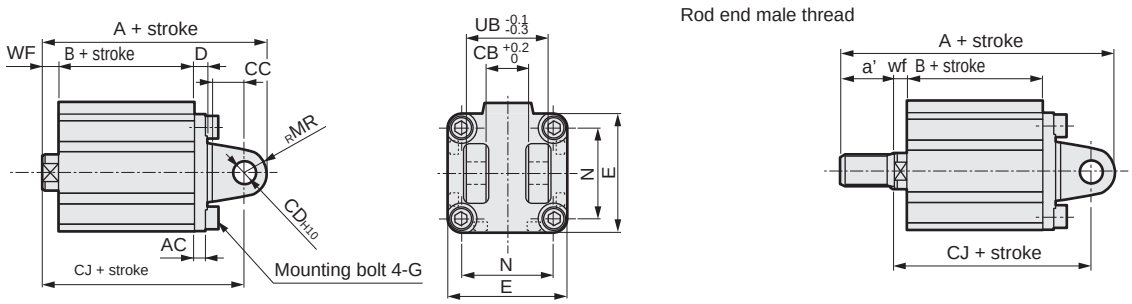

Code	Common dimensions										Female thread				Male thread				
Bore size (mm)	AC	CB	CC	CD	D	E	G	MR	N	UB	WF	A	B	CJ	a'	wf	A	B	CJ
ø32	4.5	18.2	14	10	5	45	M6x16	10	34	36	7	70(80)	33(43)	60	23.5	5	91.5(101.5)	33(43)	58
ø40	5	18.2	14	10	6	52	M6x16	10	40	36	7	78.5(88.5)	39.5(49.5)	68.5	23.5	5	100(110)	39.5(49.5)	66.5
ø50	6	22.2	20	14	7	64	M8x20	14	50	44	8	90.5(100.5)	40.5(50.5)	76.5	28.5	5	116(126)	40.5(50.5)	73.5
ø63	7	22.2	20	14	8	77	M10x25	14	60	44	8	98(108)	46(56)	84	28.5	5	123.5(133.5)	46(56)	81
ø80	9	28.2	27	18	10	98	M12x40	18	77	56	10	119.5(129.5)	53.5(63.5)	101.5	35.5	8	153(163)	53.5(63.5)	99.5
ø100	12	32.2	31	22	13	117	M12x40	22	94	64	12	142(152)	63(73)	120	35.5	8	173.5(183.5)	63(73)	116

*1 Dimensions in ( ) are for strokes of more than 50 mm.
*2 A pin and a snap ring are included.

SCP*3
CMK2
CMA2
SCM
SCG
SCA2
SCS2
CKV2
CAV2/COVP/N2
SSD2
SSG
SSD
CAT
MDC2
MVC
SMG
MSD/MSDG
FC*
STK
SRL3
SRG3
SRM3
SRT3
MRL2
MRG2
SM-25
ShkAbs
FJ
FK
Spd Contr
Ending

Dimensions with mounting bracket

CAD

● Rod side flange (FA) without switch
SSD2-K-32 to 100 -FA

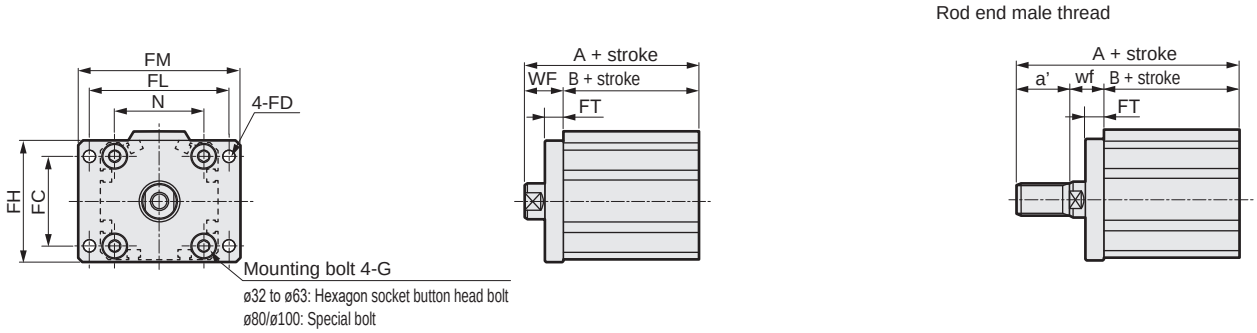

Code	Common dimensions								Female thread			Male thread			
Bore size (mm)	FC	FD	FH	FL	FM	FT	N	G	WF	A	B	a'	wf	A	B
ø32	34	5.5	48	56	65	8	34	M6x16	17	50(60)	33(43)	23.5	15	71.5(81.59)	33(43)
ø40	40	5.5	54	62	72	8	40	M6x16	17	56.5(66.5)	39.5(49.5)	23.5	15	78(88)	39.5(49.5)
ø50	50	6.6	67	76	89	9	50	M8x20	18	58.5(68.5)	40.5(50.5)	28.5	15	84(94)	40.5(50.5)
ø63	60	9	80	92	108	9	60	M10x25	18	64(74)	46(56)	28.5	15	89.5(99.5)	46(56)
ø80	77	11	99	116	134	11	77	M12x40	20	73.5(83.5)	53.5(63.5)	35.5	18	107(117)	53.5(63.5)
ø100	94	11	117	136	154	11	94	M12x40	22	85(95)	63(73)	35.5	18	116.5(126.5)	63(73)

* Dimensions in ( ) are for strokes of more than 50 mm.

● Head side flange (FB) without switch
SSD2-K-32 to 100 -FB

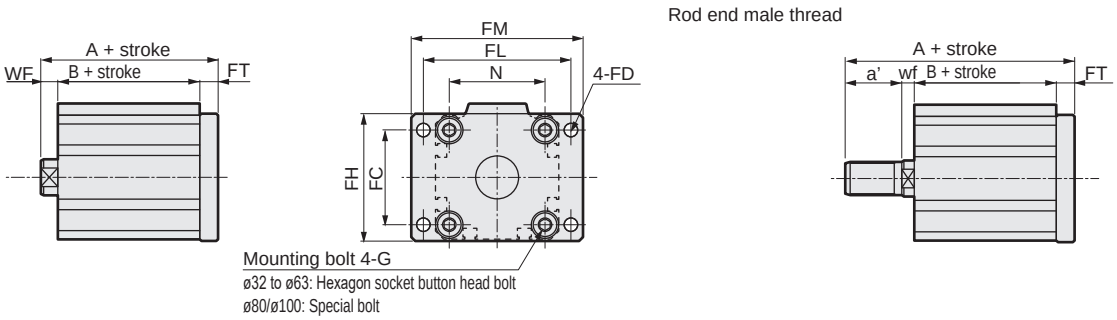

Code	Common dimensions								Female thread			Male thread			
Bore size (mm)	FC	FD	FH	FL	FM	FT	N	G	WF	A	B	a'	wf	A	B
ø32	34	5.5	48	56	65	8	34	M6x16	7	48(58)	33(43)	23.5	5	69.5(79.5)	33(43)
ø40	40	5.5	54	62	72	8	40	M6x16	7	54.5(64.5)	39.5(49.5)	23.5	5	76(86)	39.5(49.5)
ø50	50	6.6	67	76	89	9	50	M8x20	8	57.5(67.5)	40.5(50.5)	28.5	5	83(93)	40.5(50.5)
ø63	60	9	80	92	108	9	60	M10x25	8	63(73)	46(56)	28.5	5	88.5(98.5)	46(56)
ø80	77	11	99	116	134	11	77	M12x40	10	74.5(84.5)	53.5(63.5)	35.5	8	108(118)	53.5(63.5)
ø100	94	11	117	136	154	11	94	M12x40	12	86(96)	63(73)	35.5	8	117.5(127.5)	63(73)

* Dimensions in ( ) are for strokes of more than 50 mm.

MEMO

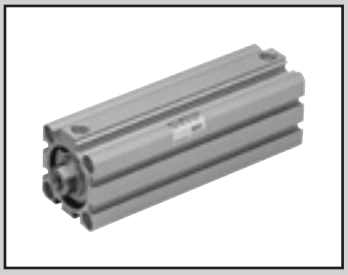

Compact cylinder double acting/single rod/long stroke

SSD2 Series (long stroke)

● Bore size: ø12/ø16/ø20/ø25/ø32
ø40/ø50/ø63/ø80/ø100

JIS symbol

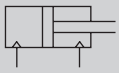

RoHS CAD

Specifications

Item	SSD2 SSD2-L (with switch)									
Bore size mm	ø12	ø16	ø20	ø25	ø32	ø40	ø50	ø63	ø80	ø100
Actuation	Double acting									
Working fluid	Compressed air									
Max. working pressure MPa	1.0 (≈150 psi, 10 bar)									
Min. working pressure MPa	0.1 (≈15 psi, 1 bar)							0.05 (≈7.3 psi, 0.5 bar)		
Proof pressure MPa	1.6 (≈230 psi, 16 bar)									
Ambient temperature °C	-10 (14°F) to 60 (140°F) (no freezing)									
Port size	M5				Rc1/8		Rc1/4		Rc3/8	
Stroke tolerance mm	+2.0 0									
Working piston speed mm/s	50 to 500							50 to 300		
Cushion	Rubber cushion									
Lubrication	Not required (use turbine oil ISO VG32 if necessary for lubrication)									
Allowable absorbed energy J	0.04	0.09	0.16	0.16	0.40	0.63	0.98	1.56	2.51	3.92

Stroke

Bore size (mm)	Standard stroke (mm)	Max. stroke (mm)
ø12	35/40/45/50/75/100	100
ø16		
ø20	75/100/125/150/175/200	200
ø25	75/100/125/150/175/200/250/300	300
ø32	125/150/175/200/250/300	
ø40		
ø50		
ø63		
ø80		
ø100		

Custom stroke

● SSD2 Series

Item	Standard products Standard stroke body with spacer	
Model No.	Refer to How to order.	
Description	A spacer is added to the standard stroke body to adjust the stroke in 1 mm increments.	
Stroke range	Bore size	Stroke range
	12/16	31 to 99
	20	51 to 199
	25	51 to 299
	32 to 100	101 to 299
Example of model No.	Model No.: SSD2-32-121 A +4 mm spacer is added to the SSD2-32-125 standard cylinder to create 121 mm stroke. B + stroke is 170.5mm.	

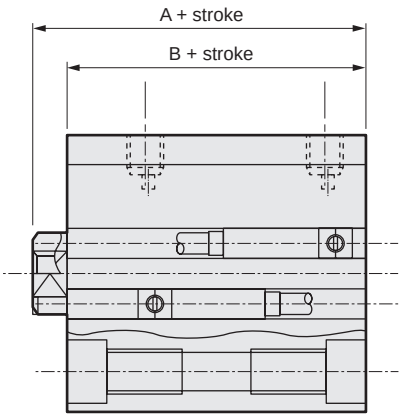

Switch specifications (F-switch)

● 1-color/2-color LED

Item	2-wire proximity	3-wire proximity	2-wire proximity		3-wire proximity		
	F2S	F3S	F2H/F2V	F2YH/F2YV	F3H/F3V	F3PH/F3PV (made to order)	F3YH/F3YV
Applications	Dedicated for programmable controller	For programmable controller, relay	Dedicated for programmable controller		For programmable controller, relay		
Output method	-	NPN output	-		NPN output	PNP output	NPN output
Power supply voltage	-	10 to 28 VDC	-		10 to 28 VDC	4.5 to 28 VDC	10 to 28 VDC
Load voltage	10 to 30 VDC	30 VDC or less	10 to 30 VDC	24 VDC ±10%	30 VDC or less		
Load current	5 to 20 mA	50 mA or less	5 to 20 mA		50 mA or less		
Indicator	LED (Lit when ON)		Yellow LED (Lit when ON)	Red/green LED (Lit when ON)	Yellow LED (Lit when ON)		Red/green LED (Lit when ON)
Leakage current	1 mA or less	10 μA or less	1 mA or less		10 μA or less		
Weight g	1 m:10 3 m:29						

Switch specifications (T-switch)

● 1-color/2-color LED/for AC magnetic field proof

Item	2-wire proximity	2-wire proximity			3-wire proximity				2-wire reed							2-wire proximity
	T1H/T1V	T2H/T2V/ T2JH/T2JV	T2YH/ T2YV	T2WH/ T2WV	T3H/T3V	T3PH/ T3PV	T3YH/ T3YV	T3WH/ T3WV	T0H/T0V		T5H/T5V		T8H/T8V			T2YD(*4) T2YDT
Applications	For programmable controller, relay, compact solenoid valve	Dedicated for programmable controller			For programmable controller, relay				For programmable controller, relay		For programmable controller, relay, IC circuit (no indicator lamp), serial connection		For programmable controller, relay			For programmable controller
Output method	-				NPN output	PNP output	NPN output	NPN output	-							
Pwr. supp. V.	-				10 to 28 VDC				-							
Load voltage	85 to 265 VAC	10 to 30 VDC		24 VDC ±10%	30 VDC or less				12/24 VDC	100/110 VAC	5/12/24 VDC	100/110 VAC	12/24 VDC	110 VAC	220 VAC	24 VDC ±10%
Load current	5 to 100 mA	5 to 20 mA (*3)			100 mA or less		50 mA or less		5 to 50 mA	7 to 20 mA	50 mA or less	20 mA or less	5 to 50 mA	7 to 20 mA	7 to 10 mA	5 to 20 mA
Indicator	LED (Lit when ON)	LED (Lit when ON)	Red/green LED (Lit when ON)	Red/green LED (Lit when ON)	LED (Lit when ON)	Yellow LED (Lit when ON)	Red/green LED (Lit when ON)	Red/green LED (Lit when ON)	LED (Lit when ON)		No indicator lamp		LED (Lit when ON)			Red/green LED (Lit when ON)
Leakage current	≤ 1 mA at 100 VAC, ≤ 2 mA at 200 VAC	1 mA or less			10 μA or less				0 mA							1 mA or less
Weight g	1 m:33 3 m:87 5 m:142	1 m:18 3 m:49 5 m:80	1 m:33 3 m:87 5 m:142	1 m:18 3 m:49 5 m:80	1 m:18 3 m:49 5 m:80		1 m:33 3 m:87 5 m:142	1 m:18 3 m:49 5 m:80	1 m:18 3 m:49 5 m:80				1 m:33 3 m:87 5 m:142			1 m:61 3 m:166 5 m:272

*1 : Refer to Ending Page 1 for detailed switch specifications and dimensions.
*2 : Switches other than the above models, such as switches with connectors, are also available. Refer to Ending Page 1.
*3 : The max. load current is 20 mA at 25°C. The current is lower than 20 mA if the operating ambient temperature around the switch is higher than 25˚C. (5 to 10 mA at 60°C)
*4 : Switch for AC magnetic field (T2YD/T2YDT) cannot be used in DC magnetic field.
*5 : The F-switch uses a bend-resistant lead wire.

Theoretical thrust table

(Unit: N)

Bore size (mm)	Operating direction	Working pressure MPa 0.05	0.1	0.15	0.2	0.3	0.4	0.5	0.6	0.7	0.8	0.9	1.0
ø12	Push	-	11.3	17.0	22.6	33.9	45.2	56.5	67.9	79.2	90.5	$1.02x10^2$	$1.13x10^2$
	Pull	-	8.48	12.7	17.0	25.4	33.9	42.4	50.9	59.4	67.9	76.3	84.8
ø16	Push	-	20.1	30.2	40.2	60.3	80.4	$1.01x10^2$	$1.21x10^2$	$1.41x10^2$	$1.61x10^2$	$1.81x10^2$	$2.01x10^2$
	Pull	-	15.1	22.6	30.2	45.2	60.3	75.4	90.5	$1.06x10^2$	$1.21x10^2$	$1.36x10^2$	$1.51x10^2$
ø20	Push	-	31.4	47.1	62.8	94.2	$1.26x10^2$	$1.57x10^2$	$1.88x10^2$	$2.20x10^2$	$2.51x10^2$	$2.83x10^2$	$3.14x10^2$
	Pull	-	23.6	35.3	47.1	70.7	94.2	$1.18x10^2$	$1.41x10^2$	$1.65x10^2$	$1.88x10^2$	$2.12x10^2$	$2.36x10^2$
ø25	Push	-	49.1	73.6	98.2	$1.47x10^2$	$1.96x10^2$	$2.45x10^2$	$2.95x10^2$	$3.44x10^2$	$3.93x10^2$	$4.42x10^2$	$4.91x10^2$
	Pull	-	37.8	56.7	75.6	$1.13x10^2$	$1.51x10^2$	$1.89x10^2$	$2.27x10^2$	$2.64x10^2$	$3.02x10^2$	$3.40x10^2$	$3.78x10^2$
ø32	Push	-	80.4	$1.21x10^2$	$1.61x10^2$	$2.41x10^2$	$3.22x10^2$	$4.02x10^2$	$4.83x10^2$	$5.63x10^2$	$6.43x10^2$	$7.24x10^2$	$8.04x10^2$
	Pull	-	60.3	90.5	$1.21x10^2$	$1.81x10^2$	$2.41x10^2$	$3.02x10^2$	$3.62x10^2$	$4.22x10^2$	$4.83x10^2$	$5.43x10^2$	$6.03x10^2$
ø40	Push	-	$1.26x10^2$	$1.88x10^2$	$2.51x10^2$	$3.77x10^2$	$5.03x10^2$	$6.28x10^2$	$7.54x10^2$	$8.80x10^2$	$1.01x10^3$	$1.13x10^3$	$1.26x10^3$
	Pull	-	$1.06x10^2$	$1.58x10^2$	$2.11x10^2$	$3.17x10^2$	$4.22x10^2$	$5.28x10^2$	$6.33x10^2$	$7.39x10^2$	$8.44x10^2$	$9.50x10^2$	$1.06x10^3$
ø50	Push	-	$1.96x10^2$	$2.95x10^2$	$3.93x10^2$	$5.89x10^2$	$7.85x10^2$	$9.82x10^2$	$1.18x10^3$	$1.37x10^3$	$1.57x10^3$	$1.77x10^3$	$1.96x10^3$
	Pull	-	$1.65x10^2$	$2.47x10^2$	$3.30x10^2$	$4.95x10^2$	$6.60x10^2$	$8.25x10^2$	$9.90x10^2$	$1.15x10^3$	$1.32x10^3$	$1.48x10^3$	$1.65x10^3$
ø63	Push	$1.56x10^2$	$3.12x10^2$	$4.68x10^2$	$6.23x10^2$	$9.35x10^2$	$1.25x10^3$	$1.56x10^3$	$1.87x10^3$	$2.18x10^3$	$2.49x10^3$	$2.81x10^3$	$3.12x10^3$
	Pull	$1.40x10^2$	$2.80x10^2$	$4.20x10^2$	$5.61x10^2$	$8.41x10^2$	$1.12x10^3$	$1.40x10^3$	$1.68x10^3$	$1.96x10^3$	$2.24x10^3$	$2.52x10^3$	$2.80x10^3$
ø80	Push	$2.51x10^2$	$5.03x10^2$	$7.54x10^2$	$1.01x10^3$	$1.51x10^3$	$2.01x10^3$	$2.51x10^3$	$3.02x10^3$	$3.52x10^3$	$4.02x10^3$	$4.52x10^3$	$5.03x10^3$
	Pull	$2.27x10^2$	$4.54x10^2$	$6.80x10^2$	$9.07x10^2$	$1.36x10^3$	$1.81x10^3$	$2.27x10^3$	$2.72x10^3$	$3.17x10^3$	$3.63x10^3$	$4.08x10^3$	$4.54x10^3$
ø100	Push	$3.93x10^2$	$7.85x10^2$	$1.18x10^3$	$1.57x10^3$	$2.36x10^3$	$3.14x10^3$	$3.93x10^3$	$4.71x10^3$	$5.50x10^3$	$6.28x10^3$	$7.07x10^3$	$7.85x10^3$
	Pull	$3.57x10^2$	$7.15x10^2$	$1.07x10^3$	$1.43x10^3$	$2.14x10^3$	$2.86x10^3$	$3.57x10^3$	$4.29x10^3$	$5.00x10^3$	$5.72x10^3$	$6.43x10^3$	$7.15x10^3$

SCP*3
CMK2
CMA2
SCM
SCG
SCA2
SCS2
CKV2
CAV2/COVP/N2
SSD2
SSG
SSD
CAT
MDC2
MVC
SMG
MSD/MSDG
FC*
STK
SRL3
SRG3
SRM3
SRT3
MRL2
MRG2
SM-25
ShkAbs
FJ
FK
Spd Contr
Ending

How to order

No switch (without magnet for switch)

SSD2 - 12 ◯ - 100 ——— N - LB - I

With switch (built-in magnet for switch)

SSD2-L - 12 ◯ - 100 - T0H - R - N - LB - I

Ⓐ Bore size

Ⓑ Port thread

Ⓒ Stroke

Ⓓ Switch model No. *1 *2 *3 *8

Ⓔ Switch quantity

Ⓕ Option *4

Ⓖ Mounting bracket *5 *6

Ⓗ Accessory *7

Precautions for model No. selection

1 : The T2YD switch cannot be mounted on the ø12 and ø16 bore sizes.
2 : The T8 switch cannot be mounted on ø12 and ø16.
*3 : The F-switch can only be mounted on the piping port surface of bore sizes ø20 and ø25.
*4 : Piston rod of ø12 to ø25 is stainless steel as standard. C-snap ring is stainless steel instead of steel. The rod end male thread nut is stainless steel.
*5 : The mounting bracket is included at shipment.
*6 : The projection dimension of piston rod WF when LB or FA is selected is different from that of the standard. Refer to the dimensions on pages 799 and 801. The number of the specified protruding dimension will be added at the end of the model No. printed on the metal plate on the body.
*7 : "I" and "Y" cannot be selected together.
*8 : Switches are shipped with the product. Contact CKD if assembling before shipment is necessary.
*9 : Refer to pages 750 and 751 for combinations of variations/options.
*10 : F-switch cannot be selected.

[Example of model No.]

SSD2-L-12-100-T0H-R-N

Model: Compact cylinder, long stroke

Ⓐ Bore size : ø12 mm
Ⓑ Port thread : Rc thread
Ⓒ Stroke : 100mm
Ⓓ Switch model No. : Reed T0H switch
· Lead wire 1 m
Ⓔ Switch quantity : 1 on rod side
Ⓕ Option : Rod end male thread

Code	Description
Ⓐ Bore size (mm)	
12	ø12
16	ø16
20	ø20
25	ø25
32	ø32
40	ø40
50	ø50
63	ø63
80	ø80
100	ø100

Ⓑ Port thread

Blank	Rc thread
NN	NPT thread (ø32 and over) (made-to-order product)
GN	G thread (ø32 and over) (made-to-order product)

Ⓒ Stroke (mm)

Refer to the stroke table on the following page.

Ⓓ Switch model No.

Lead wire Straight	Lead wire L-shaped	Contact	Voltage AC	Voltage DC	Indicator	Lead wire	Bore size 12	16	20	25	32	40	50	63	80	100
-	F2S*	Proximity		●	1-color LED	2-wire			●	●						
-	F3S*	Proximity		●	1-color LED	3-wire			●	●						
F2H*	F2V*	Proximity		●	1-color LED	2-wire			●	●						
F3H*	F3V*	Proximity		●	1-color LED	3-wire			●	●						
F3PH*	F3PV*	Proximity		●	1-color LED (PNP output) (custom)	3-wire			●	●						
F2YH*	F2YV*	Proximity		●	2-color LED	2-wire			●	●						
F3YH*	F3YV*	Proximity		●	2-color LED	3-wire			●	●						
T0H*	T0V*	Reed	●	●	1-color LED	2-wire	●	●	●	●	●	●	●	●	●	●
T5H*	T5V*	Reed	●	●	No indicator lamp	2-wire	●	●	●	●	●	●	●	●	●	●
T8H*	T8V*	Reed	●	●	1-color LED	2-wire			●	●	●	●	●	●	●	●
T1H*	T1V*	Proximity	●		1-color LED	2-wire			●	●	●	●	●	●	●	●
T2H*	T2V*	Proximity		●	1-color LED	2-wire	●	●	●	●	●	●	●	●	●	●
T3H*	T3V*	Proximity		●	1-color LED	3-wire	●	●	●	●	●	●	●	●	●	●
T3PH*	T3PV*	Proximity		●	1-color LED (PNP output)	3-wire	●	●	●	●	●	●	●	●	●	●
T2WH*	T2WV*	Proximity		●	2-color LED	2-wire	●	●	●	●	●	●	●	●	●	●
T2YH*	T2YV*	Proximity		●	2-color LED	2-wire			●	●	●	●	●	●	●	●
T3WH*	T3WV*	Proximity		●	2-color LED	3-wire	●	●	●	●	●	●	●	●	●	●
T3YH*	T3YV*	Proximity		●	2-color LED	3-wire			●	●	●	●	●	●	●	●
T2YD*	-	Proximity		●	2-color LED AC magnetic field	2-wire			●	●	●	●	●	●	●	●
T2YDT*	-	Proximity		●	2-color LED AC magnetic field	2-wire			●	●	●	●	●	●	●	●
T2JH*	T2JV*	Proximity		●	1-color LED off-delay	2-wire			●	●	●	●	●	●	●	●

*** Lead wire length**

Blank	1 m (standard)
3	3 m (option)
5	5 m (option) *10

Ⓔ Switch quantity

R	1 on rod side
H	1 on head side
D	2

Ⓕ Option

Bore size (ø)		12	16	20	25	32	40	50	63	80	100
Blank	Rod end female thread	●	●	●	●	●	●	●	●	●	●
N	Rod end male thread	●	●	●	●	●	●	●	●	●	●
M *4	Piston rod material (stainless steel)	●	●	●	●	●	●	●	●	●	●
P6	Copper and PTFE free	Standard		●	●	●	●	●	●	●	●
P4	Specifications for rechargeable battery	●	●	●	●	●	●	●	●	●	●
P40	Specifications for rechargeable battery	●	●	●	●	●	●	●	●	●	●

Ⓖ Mounting bracket

Blank	Without mounting bracket
LB	Axial foot
CB	Clevis bracket (pin and snap ring included)
FA	Rod side flange
FB	Head side flange

Ⓗ Accessory (available when rod end male thread "N" is selected)

I	Rod eye
Y	Rod clevis (pin and snap ring included)

[Stroke table]

Stroke (mm)		Applicable bore size									
		ø12	ø16	ø20	ø25	ø32	ø40	ø50	ø63	ø80	ø100
Standard stroke	35	●	●								
	40	●	●								
	45	●	●								
	50	●	●								
	75	●	●	●	●						
	100	●	●	●	●						
	125			●	●	●	●	●	●	●	●
	150			●	●	●	●	●	●	●	●
	175			●	●	●	●	●	●	●	●
	200			●	●	●	●	●	●	●	●
	250				●	●	●	●	●	●	●
	300				●	●	●	●	●	●	●
Max. stroke (mm)		100		200	300						
Custom stroke *1		In 1 mm increments									

*1: The total length is the same as that of the next longer standard stroke.

How to order switch

SW - T0H

Switch model No.
(Item Ⓓ on page 794)

Cylinder weight table

(the weight of the switches is when there are 2 cylinder switches.) (Unit: g)

Stroke (mm)	35		40		45		50		75		100		125		150		175		200		250		300	
Bore size (mm)	No switch	Switch	No switch	Switch	No switch	Switch	No switch	Switch	No switch	Switch	No switch	Switch	No switch	Switch	No switch	Switch	No switch	Switch	No switch	Switch	No switch	Switch	No switch	Switch
ø12	144	146	153	155	161	163	170	172	212	214	255	257	-	-	-	-	-	-	-	-	-	-	-	-
ø16	179	180	190	191	201	202	212	213	267	268	322	323	-	-	-	-	-	-	-	-	-	-	-	-
ø20	-	-	-	-	-	-	-	-	321	326	383	388	446	451	508	513	571	576	633	638	-	-	-	-
ø25	-	-	-	-	-	-	-	-	412	417	492	497	572	577	652	657	732	737	812	817	972	977	1132	1137
ø32	-	-	-	-	-	-	-	-	-	-	-	-	790	799	897	905	1003	1012	1111	1119	1326	1334	1541	1549
ø40	-	-	-	-	-	-	-	-	-	-	-	-	1000	1016	1133	1148	1265	1281	1398	1413	1663	1678	1928	1943
ø50	-	-	-	-	-	-	-	-	-	-	-	-	1553	1571	1779	1796	2004	2022	2217	2234	2642	2659	3067	3084
ø63	-	-	-	-	-	-	-	-	-	-	-	-	2138	2162	2413	2437	2688	2712	2963	2987	3512	3536	4062	4086
ø80	-	-	-	-	-	-	-	-	-	-	-	-	3478	3505	3911	3937	4343	4370	4776	4802	5640	5666	6505	6531
ø100	-	-	-	-	-	-	-	-	-	-	-	-	4816	4848	5386	5418	5956	5988	6526	6558	7667	7699	8807	8839

How to order mounting bracket

Bore size (mm) / Mounting bracket	ø12	ø16	ø20	ø25	ø32	ø40	ø50	ø63	ø80	ø100
Foot (LB)	SSD2-LB-12	SSD2-LB-16	SSD2-LB-20	SSD2-LB-25	SSD2-LB-32	SSD2-LB-40	SSD2-LB-50	SSD2-LB-63	SSD2-LB-80	SSD2-LB-100
Flange (FA/FB)	SSD2-FA-12	SSD2-FA-16	SSD2-FA-20	SSD2-FA-25	SSD2-FA-32	SSD2-FA-40	SSD2-FA-50	SSD2-FA-63	SSD2-FA-80	SSD2-FA-100
Clevis bracket (CB)	SSD2-CB-12	SSD2-CB-16	SSD2-CB-20	SSD2-CB-25	SSD2-CB-32	SSD2-CB-40	SSD2-CB-50	SSD2-CB-63	SSD2-CB-80	SSD2-CB-100

*1: The foot mounting bracket is provided as 2 pcs./set.

SCP*3
CMK2
CMA2
SCM
SCG
SCA2
SCS2
CKV2
CAV2/COVP/N2
SSD2
SSG
SSD
CAT
MDC2
MVC
SMG
MSD/MSDG
FC*
STK
SRL3
SRG3
SRM3
SRT3
MRL2
MRG2
SM-25
ShkAbs
FJ
FK
Spd Contr
Ending

Internal structure and parts list

● SSD2 (long stroke) -L-12, 16
(double acting/single rod/with switch)

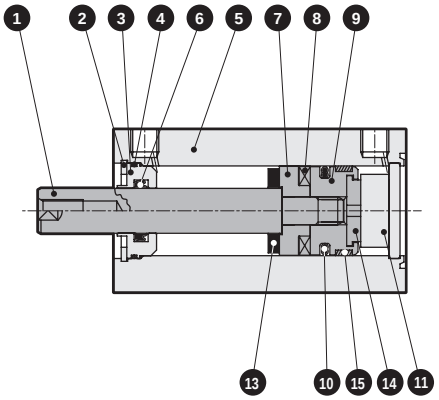

● SSD2 (long stroke) -L-20 to 100
(double acting/single rod/with switch)

ø20: Over 100 to 200 mm stroke
ø25: Over 150 to 300 mm stroke
ø32 to ø50: Over 150 to 300 mm stroke
ø63 to ø100: Over 200 to 300 mm stroke

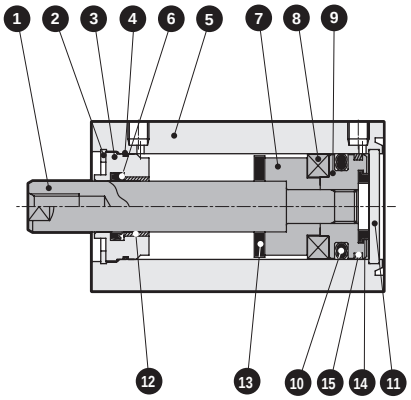

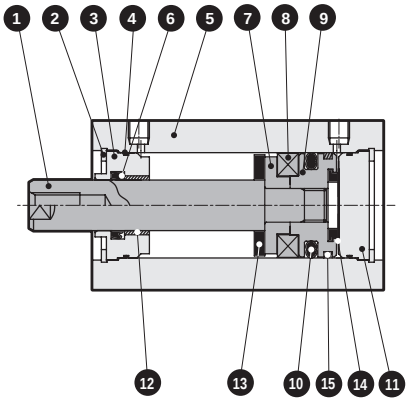

● SSD2 (long stroke) -12, 16
(double acting/single rod)

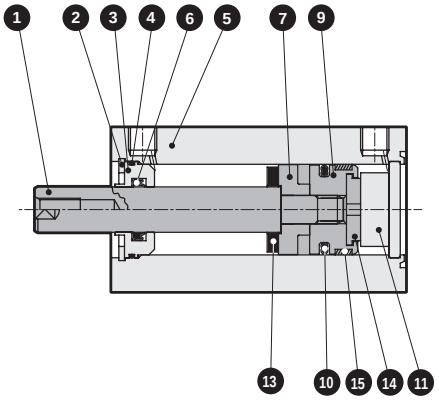

● SSD2 (long stroke) -20 to 100
(double acting/single rod)

ø20: Over 100 to 200 mm stroke
ø25: Over 150 to 300 mm stroke
ø32 to ø50: Over 150 to 300 mm stroke
ø63 to ø100: Over 200 to 300 mm stroke

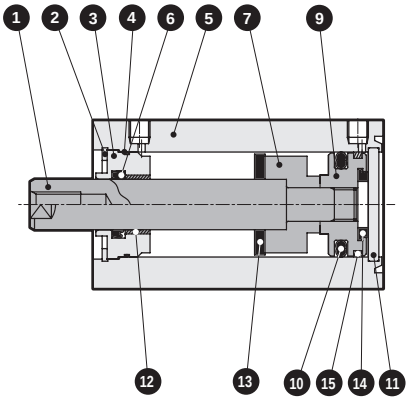

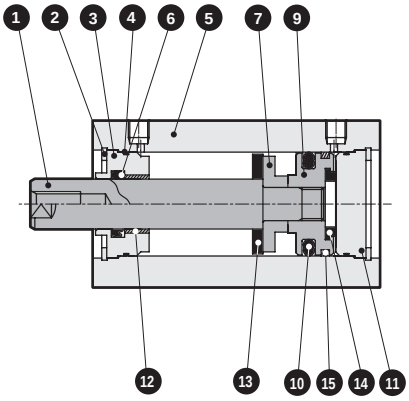

No.	Part name	Material	Remarks	No.	Part name	Material	Remarks
1	Piston rod	ø12 to 25: Stainless steel ø32 to 100: Steel	ø16 to 100 Industrial chrome plating	9	Piston	Aluminum alloy	Chromate
2	C-snap ring	Steel	Zinc phosphate	10	Piston packing	Nitrile rubber	
3	Rod metal	Special aluminum	Chromate	11	Cover	ø12 to 25: Stainless steel ø32 to 100: Aluminum alloy	ø32 to 100: Alumite (*1)
4	Rod metal gasket	Nitrile rubber		12	Bush	Oiles drymet	ø20 to 100 (*2)
5	Body	Aluminum alloy	Hard alumite	13	Cushion rubber (R)	Urethane rubber	
6	Rod packing	Nitrile rubber		14	Cushion rubber (H)	Urethane rubber	
7	Spacer	Aluminum alloy	ø12 to ø32: Chromate	15	Wear ring	Polyacetal resin	
8	Magnet	Plastic					

*1: For ø20 with more than 100 mm stroke and ø25 with more than 150 mm stroke, the standard cover material is aluminum alloy with chromate coating noted in remarks.
*2: Material is steel for copper and PTFE free specifications.

Repair parts list

Same as SSD2-K Series (double acting/high load). Refer to pages 780 and 781.

MEMO

SCP*3
CMK2
CMA2
SCM
SCG
SCA2
SCS2
CKV2
CAV2/COVP/N2
SSD2
SSG
SSD
CAT
MDC2
MVC
SMG
MSD/MSDG
FC*
STK
SRL3
SRG3
SRM3
SRT3
MRL2
MRG2
SM-25
ShkAbs
FJ
FK
Spd Contr
Ending

Dimensions CAD

● SSD2 (long stroke) -(L)-12 to 25
* The dimensions are common for types with and without switches.

ø12/ø16

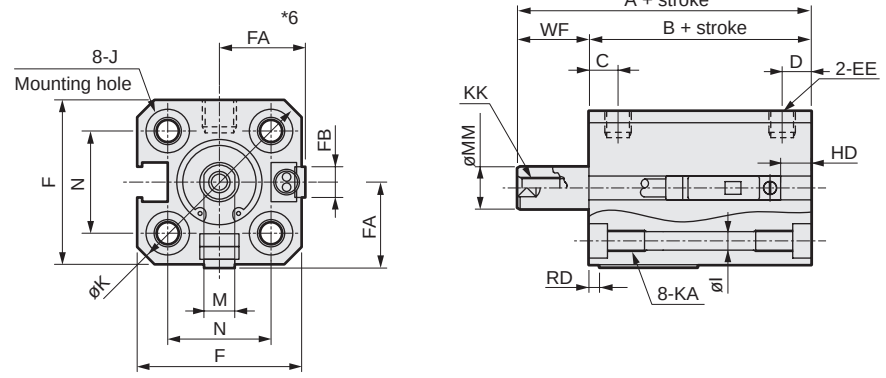

● Rod end male thread

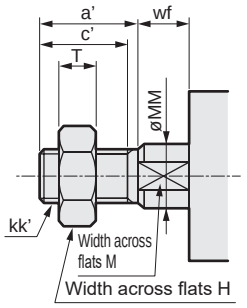

ø20/ø25

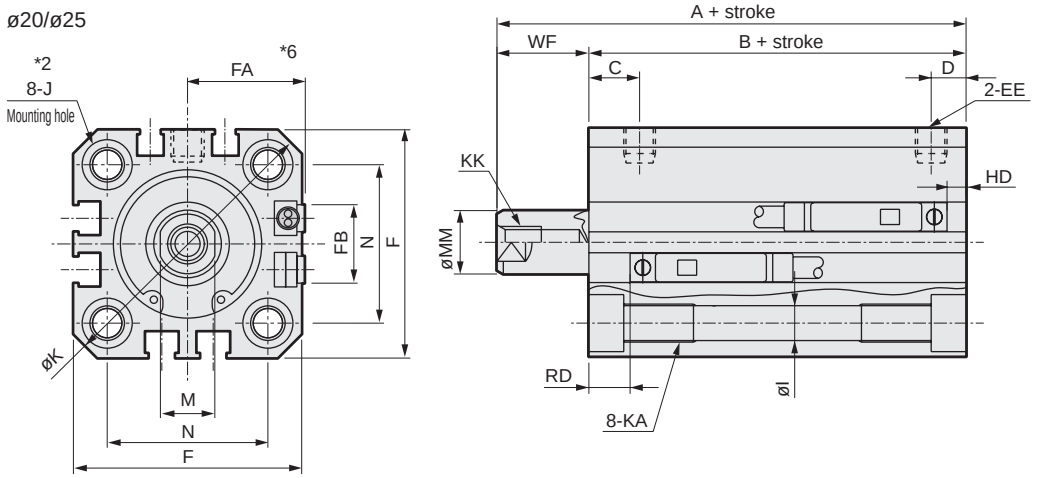

· Precautions regarding the switch mounting groove
*1: Only F-switch is available for the ø20 or ø25 piping port surface.

Code / Bore size (mm)	Common dimensions with switch																
	A *1	B *1	C	D *3	EE	F	FA *6	FB	I	J *2	K	KA	KK	M	MM	N	WF
ø12	45.5	32	5.5	5.5	M5	25	13(16.5)	4.5	3.5	6.5 spot face depth 3.5	32	M4 depth 7	M3 depth 6	5	6	15.5	13.5
ø16	45.5	32	5.5	5.5	M5	29	15(18.5)	4.5	3.5	6.5 spot face depth 3.5	38	M4 depth 7	M4 depth 8	6	8	20	13.5
ø20	55.5	41	8	5.5(8)	M5	36	18.5(22)	12.5	5.5	9 spot face depth 5.5	47	M6 depth 11	M5 depth 7	8	10	25.5	14.5
ø25	59	44	11	6(11)	M5	40	20.5(24)	13.5	5.5	9 spot face depth 5.5	51	M6 depth 11	M6 depth 12	10	12	28	15

Switch dimensions / Bore size (mm)	Reed T0H/T0V, T5H/T5V *3		Proximity T2H/T2V, T3H/T3V *3		Proximity T2WH/T2WV, T3WH/T3WV *3		Proximity F2H/F2V, F3H/F3V, F2YH/F2YV, F3YH/F3YV *3		Proximity F2S/F3S	
	HD	RD	HD	RD	HD	RD	HD	RD	HD	RD
ø12	8.5	5	8.5	5	10.5	6.5				
ø16	8.5	5	8.5	5	10.5	6.5				
ø20	6(12.5)	16(10)	6(12.5)	16(10)	7.5(14)	17.5(12)	10(16.5)	20(14.5)	9(15.5)	19(13.5)
ø25	5.5(14)	19.5(12)	5.5(14)	19.5(12)	7(15.5)	21(14)	9.5(18)	23.5(16.5)	8.5(17)	22.5(15.5)

*1 : To calculate A + stroke or B + stroke when using custom stroke, apply the next longer standard stroke (instead of the custom stroke) to the stroke value.
(Example) If the custom stroke is 70 mm, apply the standard stroke 75 mm.
*2 : No spot facing J for ø20 with more than 100 mm stroke and ø25 with more than 150 mm stroke.
*3 : Values in ( ) are for ø20 with more than 100 mm stroke and ø25 with more than 150 mm stroke.
4 : Refer to page 1044 for HD and RD dimensions of the 2-color LED, off-delay, AC magnetic field tolerant, T1 and T8* switches.
5 : Refer to page 1044 for protruding dimensions of the 2-color LED, off-delay, AC magnetic field tolerant, T1 and T8* switches.
*6 : Dimensions in ( ) of FA are for the L-shaped lead wire.
*7 : For dimensions of individual accessories, refer to pages 1046 to 1049.

● Dimensions of rod end male thread part

Code / Bore size (mm)	a'	c'	H	kk'	M	MM	T	wf
ø12	10.5	9	8	M5	5	6	3.2	13.5
ø16	12	10	10	M6	6	8	3.6	13.5
ø20	14	12	13	M8	8	10	5	14.5
ø25	17.5	15	17	M10x1.25	10	12	6	15

Dimensions with mounting bracket

● Axial foot (LB)
SSD2-(L)-12 to 25 -LB

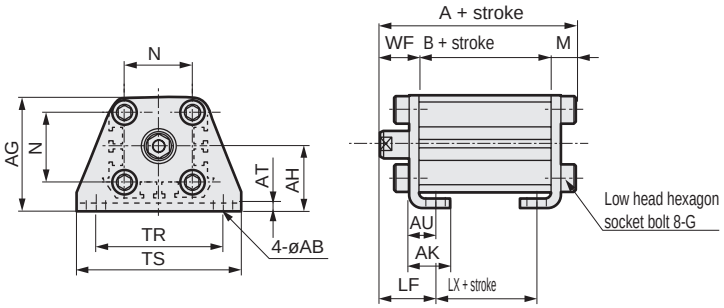

Rod end male thread

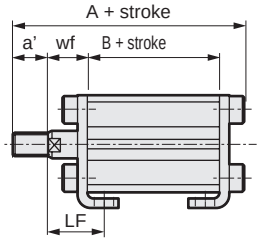

● Clevis bracket (CB)
SSD2-(L)-12 to 25 -CB

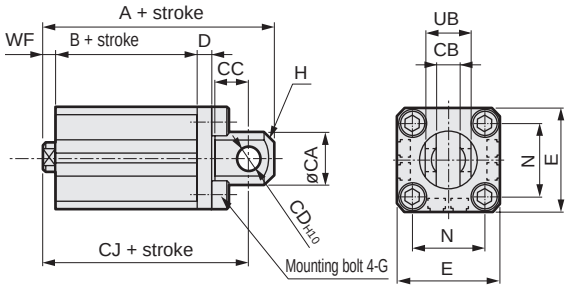

Rod end male thread

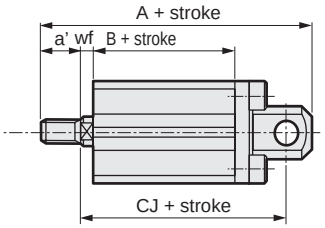

Code / Bore size (mm)	Common dimensions						Female thread				
	AB	AG	AH	AK	AT	AU	G	N	TR	TS	M
ø12	5	29.5	17	12.5	2	8	M4x10	15.5	34	44	4.8
ø16	5	33.5	19	13	2	8	M4x10	20	38	48	4.8
ø20	7	42	24	15	3.2	9.2	M6x16	25.5	48	62	7.2
ø25	7	46	26	16.5	3.2	10.7	M6x16	28	52	66	7.2

Code / Bore size (mm)						Male thread					
	WF	LF	Without/with switch			a'	wf	LF	Without/with switch		
			A	B	LX				A	B	LX
ø12	13.5	19.5	50.3	32	20	10.5	13.5	19.5	60.8	32	20
ø16	13.5	19.5	50.3	32	20	12	13.5	19.5	62.3	32	20
ø20	14.5	20.5	62.7	41	29	14	14.5	20.5	76.7	41	29
ø25	15	22.5	66.2	44	29	17.5	15	22.5	83.7	44	29

Code / Bore size (mm)	Common dimensions									
	CA	CB	CC	CD	D	E	G	H	N	UB
ø12	12	$5.2^{+0.2}_{0}$	7	5	4	25	M4x12	C1.5	15.5	$10^{-0.1}_{-0.3}$
ø16	15	$6.6^{+0.3}_{0}$	8	5	5	29	M4x12	C2	20	$12^{-0.1}_{-0.4}$
ø20	20	$8.2^{+0.2}_{0}$	12	8	5	36	M6x16	C4	25.5	$16^{-0.1}_{-0.3}$
ø25	24	$10.2^{+0.2}_{0}$	14	10	5	40	M6x16	C5	28	$20^{-0.1}_{-0.3}$

Code / Bore size (mm)	Female thread				Male thread				
	WF	Without/with switch			a'	wf	Without/with switch		
		A	B	CJ			A	B	CJ
ø12	13.5	65.5	32	59.5	10.5	13.5	76	32	59.5
ø16	13.5	66.5	32	60.5	12	13.5	78.5	32	60.5
ø20	14.5	82.5	41	73.5	14	14.5	96.5	41	73.5
ø25	15	89	44	79	17.5	15	106.5	44	79

● Rod side flange (FA)
SSD2-(L)-12 to 25 -FA

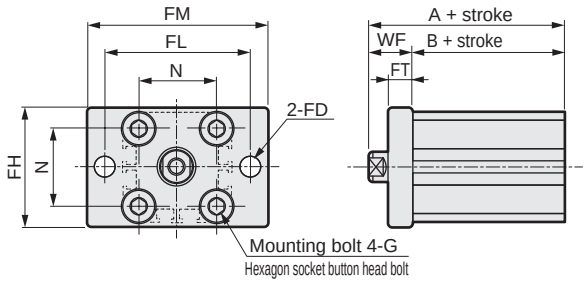

Rod end male thread

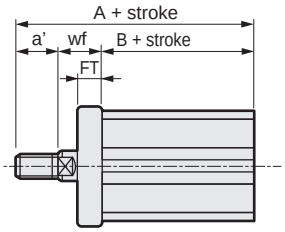

● Head side flange (FB)
SSD2-(L)-12 to 25 -FB

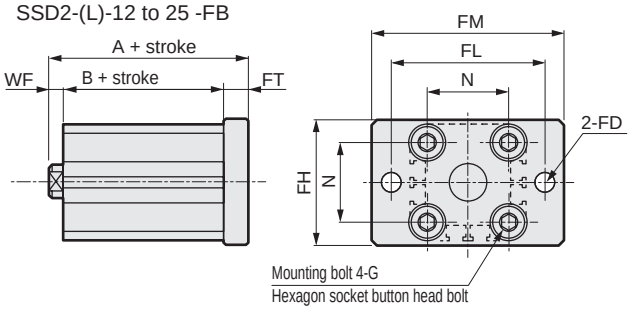

Rod end male thread

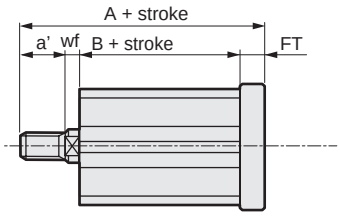

Code / Bore size (mm)	Common dimensions						
	FD	FH	FL	FM	FT	N	G
ø12	4.5	25	45	55	5.5	15.5	M4x12
ø16	4.5	30	45	55	5.5	20	M4x12
ø20	6.6	39	48	60	8	25.5	M6x16
ø25	6.6	42	52	64	8	28	M6x16

Code / Bore size (mm)	Female thread			Male thread			
	WF	Without/with switch		a'	wf	Without/with switch	
		A	B			A	B
ø12	13.5	45.5	32	10.5	13.5	56	32
ø16	13.5	45.5	32	12	13.5	57.5	32
ø20	14.5	55.5	41	14	14.5	69.5	41
ø25	15	59	44	17.5	15	76.5	44

Code / Bore size (mm)	Common dimensions						
	FD	FH	FL	FM	FT	N	G
ø12	4.5	25	45	55	5.5	15.5	M4x12
ø16	4.5	30	45	55	5.5	20	M4x12
ø20	6.6	39	48	60	8	25.5	M6x16
ø25	6.6	42	52	64	8	28	M6x16

Code / Bore size (mm)	Female thread			Male thread			
	WF	Without/with switch		a'	wf	Without/with switch	
		A	B			A	B
ø12	13.5	51	32	10.5	13.5	61.5	32
ø16	13.5	51	32	12	13.5	63	32
ø20	14.5	63.5	41	14	14.5	77.5	41
ø25	15	67	44	17.5	15	84.5	44

SCP*3
CMK2
CMA2
SCM
SCG
SCA2
SCS2
CKV2
CAV2/ COVP/N2
SSD2
SSG
SSD
CAT
MDC2
MVC
SMG
MSD/ MSDG
FC*
STK
SRL3
SRG3
SRM3
SRT3
MRL2
MRG2
SM-25
ShkAbs
FJ
FK
Spd Contr
Ending

Dimensions

● SSD2 (long stroke) -(L)-32 to 100
* The dimensions are common for types with and without switches.

● Rod end male thread

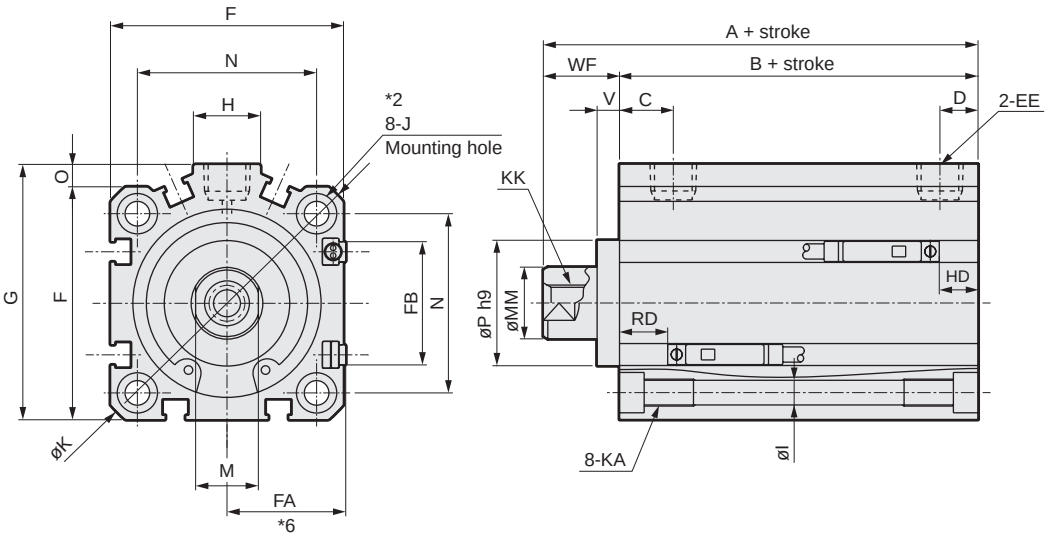

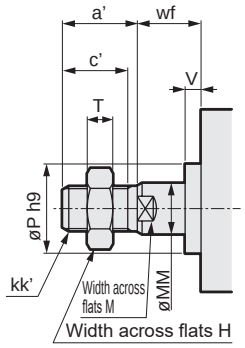

Code / Bore size (mm)	Common dimensions with switch																					
	A *1	B *1	C	D *3	EE	F	FA *6	FB	G	H	I	J	K	KA	KK	M	MM	N	O	P	V	WF
ø32	62.5	45.5	8	8	Rc1/8	45	23(26.5)	20.5	49.5	12.5	5.5	9 spot face depth 5.5	60	M6 depth 11	M8 depth 13	14	16	34	4.5	22	5	17
ø40	72	55	12	8.5(12)	Rc1/8	52	26.5(30)	27.5	57	15	5.5	9 spot face depth 5.5	69	M6 depth 11	M8 depth 13	14	16	40	5	28	5	17
ø50	73.5	55.5	10.5	10.5	Rc1/4	64	32.5(36)	28.5	71	18	6.9	11 spot face depth 6.5	86	M8 depth 13	M10 depth 15	17	20	50	7	35	5	18
ø63	75	57	13	11(13)	Rc1/4	77	39(42.5)	28.5	84	23	8.7	14 spot face depth 9	103	M10 depth 25	M10 depth 15	17	20	60	7	35	5	18
ø80	86	66	16	13(16)	Rc3/8	98	49.5(53)	28.5	104	31	10.5	17.5 spot face depth 11	132	M12 depth 28	M16 depth 21	22	25	77	6	43	5	20
ø100	97.5	75.5	23	15(23)	Rc3/8	117	59(62.5)	28.5	123.5	38	10.5	17.5 spot face depth 11	156	M12 depth 28	M20 depth 27	27	30	94	6.5	59	5	22

Switch dimensions / Bore size (mm)	Reed T0H/T0V, T5H/T5V *3		Proximity T2H/T2V, T3H/T3V *3		Proximity T2WH/T2WV, T3WH/T3WV *3	
	HD	RD	HD	RD	HD	RD
ø32	8.5(16)	18(10)	8.5(16)	18(10)	10(17.5)	19.5(12)
ø40	9.5(19)	26.5(16.5)	9.5(19)	26.5(16.5)	11(20.5)	28(18.5)
ø50	10(19)	26(17)	10(19)	26(17)	11.5(20.5)	27.5(19)
ø63	17.5(23)	20(14.5)	17.5(23)	20(14.5)	19(24.5)	21.5(16.5)
ø80	22.5(28)	24(18.5)	22.5(28)	24(18.5)	24(29.5)	25.5(20.5)
ø100	28(33.5)	28(22.5)	28(33.5)	28(22.5)	29.5(35)	29.5(24.5)

*1 : To calculate A + stroke or B + stroke when using custom stroke, apply the next longer standard stroke (instead of the custom stroke) to the stroke value. (Example) If the custom stroke is 121 mm, apply the standard stroke 125 mm.
*2 : No spot facing J for ø32 to ø50 with more than 150 mm stroke and ø63 to ø100 with more than 200 mm stroke.
*3 : Values in ( ) are for ø32 to ø50 with more than 150 mm stroke and ø63 to ø100 with more than 200 mm stroke.
4 : Refer to page 1044 for HD and RD dimensions of the 2-color LED, off-delay, AC magnetic field tolerant, T1 and T8* switches.
5 : Refer to page 1044 for protruding dimensions of the 2-color LED, off-delay, AC magnetic field tolerant, T1 and T8* switches.
*6 : Dimensions in ( ) of FA are for the L-shaped lead wire.
*7 : For dimensions of individual accessories, refer to pages 1046 to 1049.

● Dimensions of rod end male thread part

Code / Bore size (mm)	a'	c'	H	kk'	M	MM	T	wf
ø32	23.5	20.5	22	M14x1.5	14	16	8	15
ø40	23.5	20.5	22	M14x1.5	14	16	8	15
ø50	28.5	26	27	M18x1.5	17	20	11	15
ø63	28.5	26	27	M18x1.5	17	20	11	15
ø80	35.5	32.5	32	M22x1.5	22	25	13	18
ø100	35.5	32.5	41	M26x1.5	27	30	16	18

Dimensions with mounting bracket

CAD

● Axial foot (LB)
SSD2-(L)-32 to 100 -LB

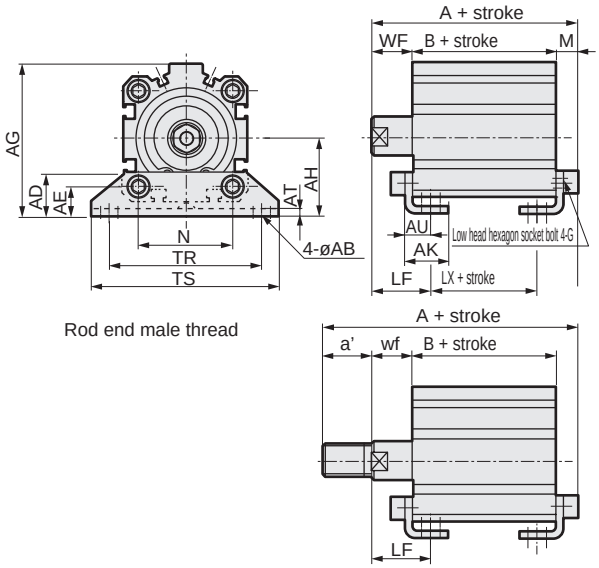

Code	Common dimensions						Female thread					
Bore size (mm)	AB	AD	AE	AG	AH	AK	AT	AU	G	N	TR	TS
ø32	7	18.5	13	57	30	17	3.2	11.2	M6x16	34	57	71
ø40	7	18	13	64	33	18.2	3.2	11.2	M6x16	40	64	78
ø50	9	22	14	78	39	22.7	3.2	14.7	M8x20	50	79	95
ø63	11	26	16	91.5	46	25.2	3.2	16.2	M10x25	60	95	113
ø80	13	31.5	20.5	114	59	30.5	4.5	19.5	M12x40	77	118	140
ø100	13	35	24	136	71	35.5	6	23	M12x40	94	137	162

Code	Male thread											
Bore size (mm)	M	WF	LF	Without/with switch			a'	wf	LF	Without/with switch		
				A	B	LX				A	B	LX
ø32	7.2	17	25	69.7	45.5	29.5	23.5	15	23	91.2	45.5	29.5
ø40	7.2	17	25	79.2	55	39	23.5	15	23	100.7	55	39
ø50	8.2	18	29.5	81.7	55.5	32.5	28.5	15	26.5	107.2	55.5	32.5
ø63	9.2	18	31	84.2	57	31	28.5	15	28	109.7	57	31
ø80	11.5	20	35	97.5	66	36	35.5	18	33	131	66	36
ø100	13	22	39	110.5	75.5	41.5	35.5	18	35	142	75.5	41.5

● Clevis bracket (CB)
SSD2-(L)-32 to 100 -CB

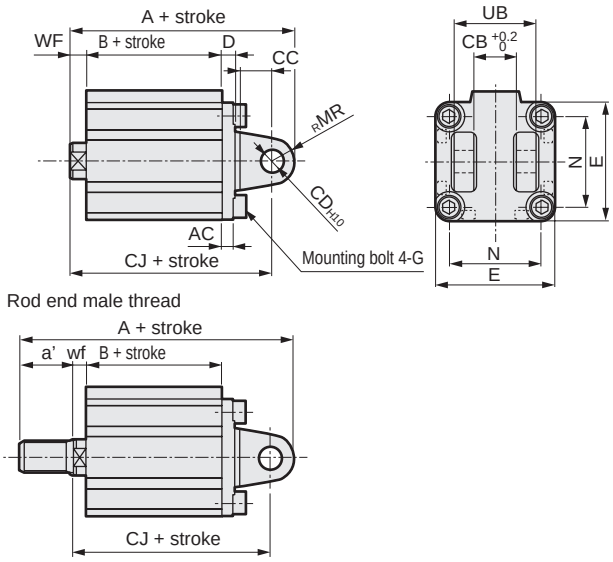

Code	Common dimensions									
Bore size (mm)	AC	CB	CC	CD	D	E	G	MR	N	UB
ø32	4.5	18.2	14	10	5	45	M6x16	10	34	36
ø40	5	18.2	14	10	6	52	M6x16	10	40	36
ø50	6	22.2	20	14	7	64	M8x20	14	50	44
ø63	7	22.2	20	14	8	77	M10x25	14	60	44
ø80	9	28.2	27	18	10	98	M12x40	18	77	56
ø100	12	32.2	31	22	13	117	M12x40	22	94	64

Code	Female thread				Male thread				
Bore size (mm)	WF	Without/with switch			a'	wf	Without/with switch		
		A	B	CJ			A	B	CJ
ø32	17	92.5	45.5	82.5	23.5	15	114	45.5	80.5
ø40	17	104	55	94	23.5	15	125.5	55	92
ø50	18	115.5	55.5	101.5	28.5	15	141	55.5	98.5
ø63	18	119	57	105	28.5	15	144.5	57	102
ø80	20	142	66	124	35.5	18	175.5	66	122
ø100	22	164.5	75.5	142.5	35.5	18	196	75.5	138.5

● Rod side flange (FA)
SSD2-(L)-32 to 100 -FA

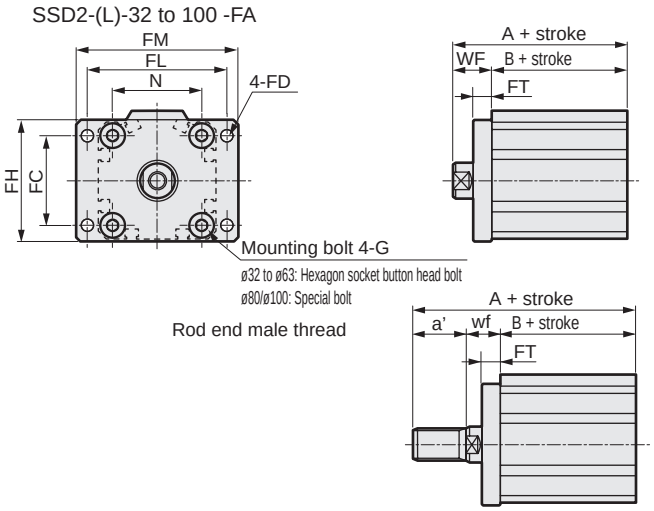

Code	Common dimensions							
Bore size (mm)	FC	FD	FH	FL	FM	FT	N	G
ø32	34	5.5	48	56	65	8	34	M6x16
ø40	40	5.5	54	62	72	8	40	M6x16
ø50	50	6.6	67	76	89	9	50	M8x20
ø63	60	9	80	92	108	9	60	M10x25
ø80	77	11	99	116	134	11	77	M12x40
ø100	94	11	117	136	154	11	94	M12x40

Code	Female thread			Male thread			
Bore size (mm)	WF	Without/with switch		a'	wf	Without/with switch	
		A	B			A	B
ø32	17	62.5	45.5	23.5	15	84	45.5
ø40	17	72	55	23.5	15	93.5	55
ø50	18	73.5	55.5	28.5	15	99	55.5
ø63	18	75	57	28.5	15	100.5	57
ø80	20	86	66	35.5	18	119.5	66
ø100	22	97.5	75.5	35.5	18	129	75.5

● Head side flange (FB)
SSD2-(L)-32 to 100 -FB

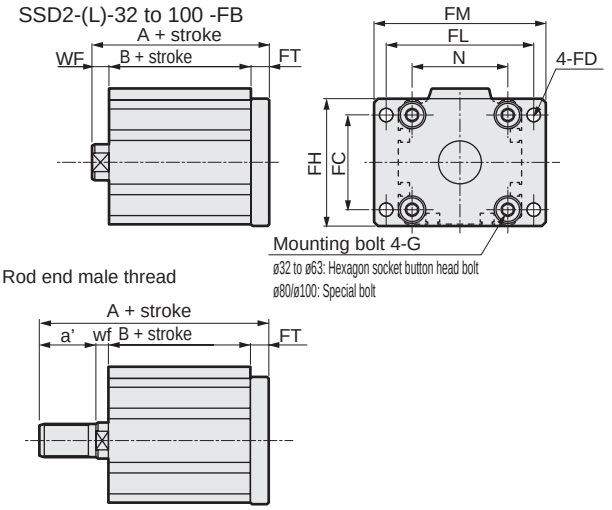

Code	Common dimensions							
Bore size (mm)	FC	FD	FH	FL	FM	FT	N	G
ø32	34	5.5	48	56	65	8	34	M6x16
ø40	40	5.5	54	62	72	8	40	M6x16
ø50	50	6.6	67	76	89	9	50	M8x20
ø63	60	9	80	92	108	9	60	M10x25
ø80	77	11	99	116	134	11	77	M12x40
ø100	94	11	117	136	154	11	94	M12x40

Code	Female thread			Male thread			
Bore size (mm)	WF	Without/with switch		a'	wf	Without/with switch	
		A	B			A	B
ø32	17	70.5	45.5	23.5	15	92	45.5
ø40	17	80	55	23.5	15	101.5	55
ø50	18	82.5	55.5	28.5	15	108	55.5
ø63	18	84	57	28.5	15	109.5	57
ø80	20	97	66	35.5	18	130.5	66
ø100	22	108.5	75.5	35.5	18	140	75.5

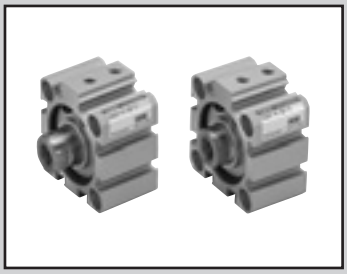

Compact cylinder single acting/push

SSD2-X Series

Single acting/pull/with switch

SSD2-Y Series

● Bore size: ø12/ø16/ø20/ø25/ø32/ø40/ø50

JIS symbol SSD2-X SSD2-Y

RoHS CAD

Specifications

Item	SSD2-X SSD2-XL (with switch) / SSD2-Y SSD2-YL (with switch)						
Bore size mm	ø12	ø16	ø20	ø25	ø32	ø40	ø50
Actuation	SSD2-X, XL: single acting/push, SSD2-Y, YL: single acting/pull						
Working fluid	Compressed air						
Max. working pressure MPa	1.0 (≈150 psi, 10 bar)						
Min. working pressure MPa	0.2 (≈29 psi, 2 bar)		0.17 (≈25 psi, 1.7 bar)		0.12 (≈17 psi, 1.2 bar)		
Proof pressure MPa	1.6 (≈230 psi, 16 bar)						
Ambient temperature °C	-10 (14°F) to 60 (140°F) (no freezing)						
Port size	M5				Rc1/8 *2		Rc1/4
Stroke tolerance mm	+1.0 0						
Working piston speed mm/s	50 to 500						
Cushion	None						
Lubrication	Not required (use turbine oil ISO VG32 if necessary for lubrication)						
Allowable absorbed energy J	0.004	0.01	0.016	0.021	0.025	0.092	0.1

*1: Do not leave the single acting cylinder pressurized for a long time. If it is left pressurized for long periods, the piston rod may not return due to spring load when the pressure is released. Use the double acting if the cylinder needs to be left pressurized for long periods.
*2: The ø32 bore size with a 5 mm stroke and without a switch has a port size of M5.

Stroke

Bore size (mm)	Standard stroke (mm)	Max. stroke (mm)	Min. stroke (mm)
ø12	5, 10	10	5
ø16			
ø20			
ø25			
ø32			
ø40			
ø50	10, 20	20	10

*1 : When using the type with switch, refer to the table on the right.
*2: Refer to pages 811 and 817 for the min. stroke with mounting bracket LB.

Min. stroke with switch (1 or 2 switches)

Bore size (mm)	T0H/V / T5H/V	T2H/V / T3H/V
ø12	10 *2	5
ø16		
ø20	5	
ø25		
ø32		
ø40		
ø50	10	10

1: Less than 10 mm with the 2-color LED, off-delay, AC magnetic field proof, T1 or T8* switch is not available.
*2: 5 mm stroke is available only for the type with 1 on rod side.

SSD2-X/SSD2-Y spring load

(Unit: N)

Bore size (mm)	Stroke (mm)	SSD2-X When stroke = 0	SSD2-X At full stroke operation	SSD2-Y When stroke = 0	SSD2-Y At full stroke operation
12	5	4	14	3	10
	10	4	14	3	10
16	5	6	15	4	19
	10	6	15	4	19
20	5	6	15	5	27
	10	6	15	5	27
25	5	11	21	10	29
	10	11	21	10	29
32	5	23	30	20	29
	10	16	30	20	29
40	5	13	30	20	29
	10	21	39	20	29
50	10	30	50	24	83
	20	24	54	24	83

Switch specifications (F-switch)

● 1-color/2-color LED

Item	2-wire proximity	3-wire proximity	2-wire proximity		3-wire proximity		
	F2S	F3S	F2H/F2V	F2YH/F2YV	F3H/F3V	F3PH/F3PV (made to order)	F3YH/F3YV
Applications	Dedicated for programmable controller	For programmable controller, relay	Dedicated for programmable controller		For programmable controller, relay		
Output method	-	NPN output	-		NPN output	PNP output	NPN output
Power supply voltage	-	10 to 28 VDC	-		10 to 28 VDC	4.5 to 28 VDC	10 to 28 VDC
Load voltage	10 to 30 VDC	30 VDC or less	10 to 30 VDC	24 VDC ±10%	30 VDC or less		
Load current	5 to 20 mA	50 mA or less	5 to 20 mA		50 mA or less		
Indicator	LED (Lit when ON)		Yellow LED (Lit when ON)	Red/green LED (Lit when ON)	Yellow LED (Lit when ON)		Red/green LED (Lit when ON)
Leakage current	1 mA or less	10 μA or less	1 mA or less		10 μA or less		
Weight g	1 m:10 3 m:29						

Switch specifications (T-switch)

● 1-color/2-color LED/for AC magnetic field proof

Item	2-wire proximity	2-wire proximity			3-wire proximity				2-wire reed							2-wire proximity
	T1H/T1V	T2H/T2V/T2JH/T2JV	T2YH/T2YV	T2WH/T2WV	T3H/T3V	T3PH/T3PV	T3YH/T3YV	T3WH/T3WV	T0H/T0V		T5H/T5V		T8H/T8V			T2YD(*4) T2YDT
Applications	For programmable controller, relay, compact solenoid valve	Dedicated for programmable controller			For programmable controller, relay				For programmable controller, relay		For programmable controller, relay, IC circuit (no indicator lamp), serial connection		For programmable controller, relay			For programmable controller
Output method	-				NPN output	PNP output	NPN output	NPN output	-							
Pwr. supp. V.	-				10 to 28 VDC				-							
Load voltage	85 to 265 VAC	10 to 30 VDC		24 VDC ±10%	30 VDC or less				12/24 VDC	100/110 VAC	5/12/24 VDC	100/110 VAC	12/24 VDC	110 VAC	220 VAC	24 VDC ±10%
Load current	5 to 100 mA	5 to 20 mA (*3)			100 mA or less		50 mA or less		5 to 50 mA	7 to 20 mA	50 mA or less	20 mA or less	5 to 50 mA	7 to 20 mA	7 to 10 mA	5 to 20 mA
Indicator	LED (Lit when ON)	LED (Lit when ON)	Red/green LED (Lit when ON)	Red/green LED (Lit when ON)	LED (Lit when ON)	Yellow LED (Lit when ON)	Red/green LED (Lit when ON)	Red/green LED (Lit when ON)	LED (Lit when ON)		No indicator lamp		LED (Lit when ON)			Red/green LED (Lit when ON)
Leakage current	≤ 1 mA at 100 VAC, ≤ 2 mA at 200 VAC	1 mA or less			10 μA or less				0 mA							1 mA or less
Weight g	1 m:33 3 m:87 5 m:142	1 m:18 3 m:49 5 m:80	1 m:33 3 m:87 5 m:142	1 m:18 3 m:49 5 m:80	1 m:18 3 m:49 5 m:80		1 m:33 3 m:87 5 m:142	1 m:18 3 m:49 5 m:80	1 m:18 3 m:49 5 m:80				1 m:33 3 m:87 5 m:142			1 m:61 3 m:166 5 m:272

*1: Refer to Ending Page 1 for detailed switch specifications and dimensions.
*2: Switches other than the above models, such as switches with connectors, are also available. Refer to Ending Page 1.
*3: The max. load current is 20 mA at 25°C. The current is lower than 20 mA if the operating ambient temperature around the switch is higher than 25˚C. (5 to 10 mA at 60°C)
*4: Switch for AC magnetic field (T2YD/T2YDT) cannot be used in DC magnetic field.
*5: The F-switch uses a bend-resistant lead wire.

Cylinder weight table (the weight of the switches is when there are 2 cylinder switches.)

(Unit: g)

Stroke (mm)	5		10		20	
Bore size (mm)	No switch	With switch	No switch	With switch	No switch	With switch
ø12	40	80	49	89	-	-
ø16	52	92	64	104	-	-
ø20	74	114	89	129	-	-
ø25	107	147	127	167	-	-
ø32	155	195	183	223	-	-
ø40	249	289	285	325	-	-
ø50	-	-	459	499	572	612

Theoretical thrust table

(Unit: N)

Bore size (mm)	Operating direction	Working pressure MPa									
		0.15	0.2	0.3	0.4	0.5	0.6	0.7	0.8	0.9	1.0
ø12	Push	-	22.6	33.9	45.2	56.5	67.9	79.2	90.5	1.02×10^2	1.13×10^2
	Pull	-	17.0	25.4	33.9	42.4	50.9	59.4	67.9	76.3	84.8
ø16	Push	-	40.2	60.3	80.4	1.01×10^2	1.21×10^2	1.41×10^2	1.61×10^2	1.81×10^2	2.01×10^2
	Pull	-	30.2	45.2	60.3	75.4	90.5	1.06×10^2	1.21×10^2	1.36×10^2	1.51×10^2
ø20	Push	-	62.8	94.2	1.26×10^2	1.57×10^2	1.88×10^2	2.20×10^2	2.51×10^2	2.83×10^2	3.14×10^2
	Pull	-	47.1	70.7	94.2	1.18×10^2	1.41×10^2	1.65×10^2	1.88×10^2	2.12×10^2	2.36×10^2
ø25	Push	-	98.2	1.47×10^2	1.96×10^2	2.45×10^2	2.95×10^2	3.44×10^2	3.93×10^2	4.42×10^2	4.91×10^2
	Pull	-	75.6	1.13×10^2	1.51×10^2	1.89×10^2	2.27×10^2	2.64×10^2	3.02×10^2	3.40×10^2	3.78×10^2
ø32	Push	1.21×10^2	1.61×10^2	2.41×10^2	3.22×10^2	4.02×10^2	4.83×10^2	5.63×10^2	6.43×10^2	7.24×10^2	8.04×10^2
	Pull	90.5	1.21×10^2	1.81×10^2	2.41×10^2	3.02×10^2	3.62×10^2	4.22×10^2	4.83×10^2	5.43×10^2	6.03×10^2
ø40	Push	1.88×10^2	2.51×10^2	3.77×10^2	5.03×10^2	6.28×10^2	7.54×10^2	8.80×10^2	1.01×10^3	1.13×10^3	1.26×10^3
	Pull	1.58×10^2	2.11×10^2	3.17×10^2	4.22×10^2	5.28×10^2	6.33×10^2	7.39×10^2	8.44×10^2	9.50×10^2	1.06×10^3
ø50	Push	2.95×10^2	3.93×10^2	5.89×10^2	7.85×10^2	9.82×10^2	1.18×10^3	1.37×10^3	1.57×10^3	1.77×10^3	1.96×10^3
	Pull	2.47×10^2	3.30×10^2	4.95×10^2	6.60×10^2	8.25×10^2	9.90×10^2	1.15×10^3	1.32×10^3	1.48×10^3	1.65×10^3

How to order

No switch (without magnet for switch)

SSD2-X - 12 ○ - 5 ———— N - LB - I

With switch (built-in magnet for switch)

SSD2-XL - 12 ○ - 10 - T0H - R - N - LB - I

Ⓐ Model No.
Ⓑ Bore size
Ⓒ Port thread
Ⓓ Stroke
Ⓔ Switch model No. *1 *2 *3 *8 *9
Ⓕ Switch quantity
Ⓖ Option *4
Ⓗ Mounting bracket *5 *6
Ⓘ Accessory *7

Code	Description
Ⓐ Model No.	
SSD2-X	Single acting/push
SSD2-XL	Single acting/push/with switch
SSD2-Y	Single acting/pull
SSD2-YL	Single acting/pull/with switch

Ⓑ Bore size (mm)	
12	ø12
16	ø16
20	ø20
25	ø25
32	ø32
40	ø40
50	ø50

Ⓒ Port thread	
Blank	Rc thread
NN	NPT thread (ø32 and over) (made-to-order product)
GN	G thread (ø32 and over) (made-to-order product)

Ⓓ Stroke (mm)

	Bore size (mm)	ø12	ø16	ø20	ø25	ø32	ø40	ø50
5	5	●	●	●	●	●	●	
10	10	●	●	●	●	●	●	●
20	20							●

Ⓔ Switch model No.

Lead wire Straight	Lead wire L-shaped	Contact	Voltage AC	Voltage DC	Indicator	Lead wire	Bore size 12	16	20	25	32	40	50
-	F2S*	Proximity		●	1-color LED	2-wire			●	●			
-	F3S*	Proximity		●	1-color LED	3-wire			●	●			
F2H*	F2V*	Proximity		●	1-color LED	2-wire			●	●			
F3H*	F3V*	Proximity		●	1-color LED	3-wire			●	●			
F3PH*	F3PV*	Proximity		●	1-color LED (PNP output) (custom)	3-wire			●	●			
F2YH*	F2YV*	Proximity		●	2-color LED	2-wire			●	●			
F3YH*	F3YV*	Proximity		●	2-color LED	3-wire			●	●			
T0H*	T0V*	Reed	●	●	1-color LED	2-wire	●	●	●	●	●	●	●
T5H*	T5V*	Reed	●	●	No indicator lamp	2-wire	●	●	●	●	●	●	●
T8H*	T8V*	Reed	●	●	1-color LED	2-wire						●	●
T1H*	T1V*	Proximity	●		1-color LED	2-wire			●	●	●	●	●
T2H*	T2V*	Proximity		●	1-color LED	2-wire	●	●	●	●	●	●	●
T3H*	T3V*	Proximity		●	1-color LED	3-wire	●	●	●	●	●	●	●
T3PH*	T3PV*	Proximity		●	1-color LED (PNP output)	3-wire	●	●	●	●	●	●	●
T2WH*	T2WV*	Proximity		●	2-color LED	2-wire	●	●	●	●	●	●	●
T2YH*	T2YV*	Proximity		●	2-color LED	2-wire			●	●	●	●	●
T3WH*	T3WV*	Proximity		●	2-color LED	3-wire	●	●	●	●	●	●	●
T3YH*	T3YV*	Proximity		●	2-color LED	3-wire			●	●	●	●	●
T2YD*	-	Proximity		●	2-color LED AC magnetic field	2-wire			●	●	●	●	●
T2YDT*	-	Proximity		●	2-color LED AC magnetic field	2-wire			●	●	●	●	●
T2JH*	T2JV*	Proximity		●	1-color LED off-delay	2-wire			●	●	●	●	●

*** Lead wire length**	
Blank	1 m (standard)
3	3 m (option)
5	5 m (option) *11

Ⓕ Switch quantity	
R	1 on rod side
H	1 on head side
D	2

Ⓖ Option

	Bore size (mm)	12	16	20	25	32	40	50
Blank	Rod end female thread	●	●	●	●	●	●	●
N	Rod end male thread	●	●	●	●	●	●	●
P6	Copper and PTFE free specifications	Supported as standard						
M *4	Piston rod material (stainless steel)	●	●	●	●	●	●	●
P4	Specifications for rechargeable battery (Made to order)	●	●	●	●	●	●	●
P40	Specifications for rechargeable battery (Made to order)	●	●	●	●	●	●	●

Ⓗ Mounting bracket	
Blank	Without mounting bracket
LB	Axial foot
CB	Clevis bracket (pin and snap ring included)
FA	Rod side flange
FB	Head side flange

Ⓘ Accessory (available when rod end male thread "N" is selected)	
I	Rod eye
Y	Rod clevis (pin and snap ring included)

⚠ Precautions for model No. selection

1 : The T2YD switch cannot be mounted on the ø12 and ø16 bore sizes.
2 : The T8 switch cannot be mounted on the ø12 to ø32 bore sizes.
*3 : The F-switch can only be mounted on the piping port surface of bore sizes ø20 and ø25.
*4 : Piston rod of ø12 to ø25 is stainless steel as standard. C-snap ring is stainless steel instead of steel. The rod end male thread nut is stainless steel.
*5 : The mounting bracket is included at shipment.
*6 : The projection dimension of piston rod WF when LB or FA is selected is different from that of the standard. Refer to the dimensions on pages 809, 811, 813, 815, 817 and 819. The number of the specified protruding dimension will be added at the end of the model No. printed on the metal plate on the body.
*7 : "I" and "Y" cannot be selected together.
*8 : The F-switch with L lead wire cannot be selected on ø20 models.
*9 : Switches are shipped with the product. Contact CKD if assembling before shipment is necessary.
*10 : Refer to pages 750 and 751 for combinations of variations/options.
*11 : F-switch cannot be selected.
*12 : Refer to pages 811 and 817 for the min. stroke with mounting bracket LB.

[Example of model No.]

SSD2-XL-12-5-T0H-R-N

Model: Compact cylinder

Ⓐ Model No. : Single acting push
Ⓑ Bore size : ø12 mm
Ⓒ Port thread : Rc thread
Ⓓ Stroke : 5 mm
Ⓔ Switch model No. : Reed T0H switch/ Lead wire length 1 m
Ⓕ Switch quantity : 1 on rod side
Ⓖ Option : Rod end male thread

How to order switch

SW - T0H

Switch model No.
(Item Ⓔ on page 804)

How to order mounting bracket

Bore size (mm) / Mounting bracket	ø12	ø16	ø20	ø25	ø32	ø40	ø50
Foot (LB)	SSD2-LB-12	SSD2-LB-16	SSD2-LB-20	SSD2-LB-25	SSD2-LB-32	SSD2-LB-40	SSD2-LB-50
Flange (FA/FB)	SSD2-FA-12	SSD2-FA-16	SSD2-FA-20	SSD2-FA-25	SSD2-FA-32	SSD2-FA-40	SSD2-FA-50
Clevis bracket (CB)	SSD2-CB-12	SSD2-CB-16	SSD2-CB-20	SSD2-CB-25	SSD2-CB-32	SSD2-CB-40	SSD2-CB-50

*1: The foot mounting bracket is provided as 2 pcs./set.

Internal structure and parts list

● SSD2-XL-12 to 32 (single acting/push/with switch)

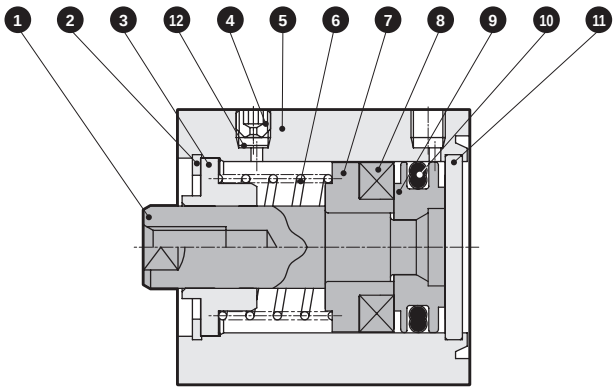

● SSD2-XL-40, 50 (single acting/push/with switch)

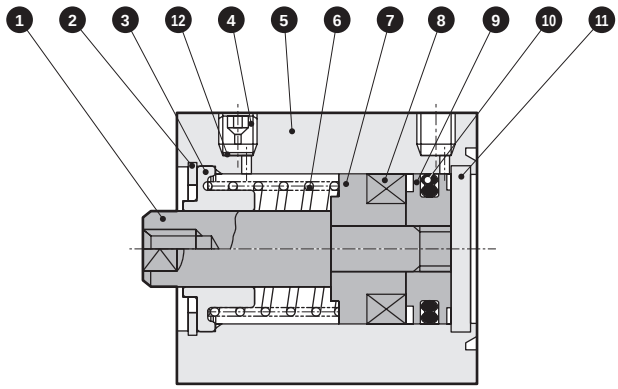

● SSD2-X-12 to 32 (single acting/push)

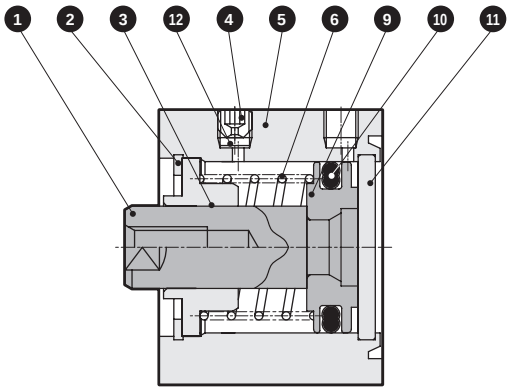

● SSD2-X-40, 50 (single acting/push)

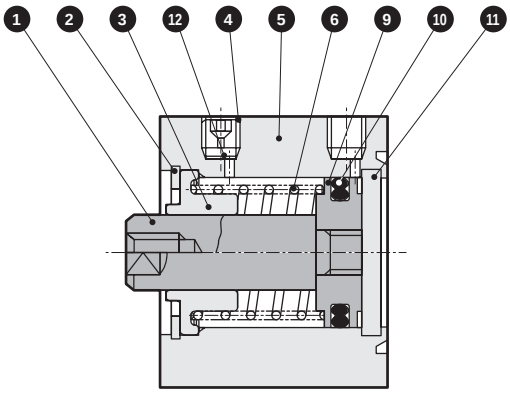

No.	Part name	Material	Remarks
1	Piston rod	ø12 to ø25: Stainless steel ø32 to ø50: Steel	ø16 to ø50: Industrial chrome plating
2	C-snap ring	Steel	Zinc phosphate
3	Rod metal	Special aluminum	Alumite
4	Plug	Stainless steel	
5	Body	Aluminum alloy	Hard alumite
6	Spring	Piano wire	Electrodeposition

No.	Part name	Material	Remarks
7	Spacer	Aluminum alloy	Chromate
8	Magnet	Plastic	
9	Piston	Aluminum alloy	Chromate
10	Piston packing	Nitrile rubber	
11	Cover	ø12 to ø25: Stainless steel ø32 to ø50: Aluminum alloy	ø32 to ø50: Alumite
12	Stainless steel wire mesh	Stainless steel	

Repair parts list

Bore size (mm)	Kit No.	Repair parts No.
ø12	SSD2-X-12K	
ø16	SSD2-X-16K	
ø20	SSD2-X-20K	
ø25	SSD2-X-25K	10
ø32	SSD2-X-32K	
ø40	SSD2-X-40K	
ø50	SSD2-X-50K	

Internal structure and parts list

● SSD2-YL (single acting/pull/with switch)

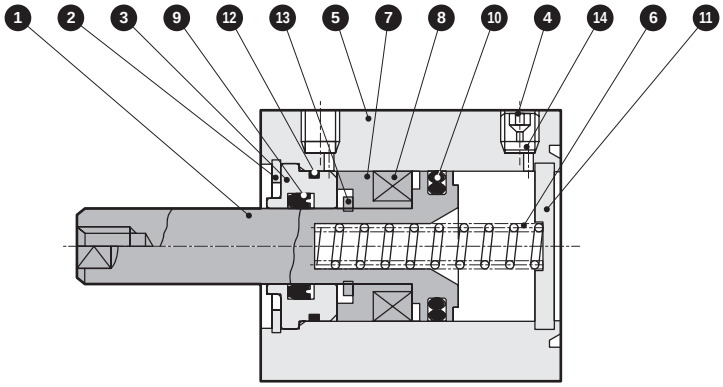

● SSD2-Y (single acting/pull)

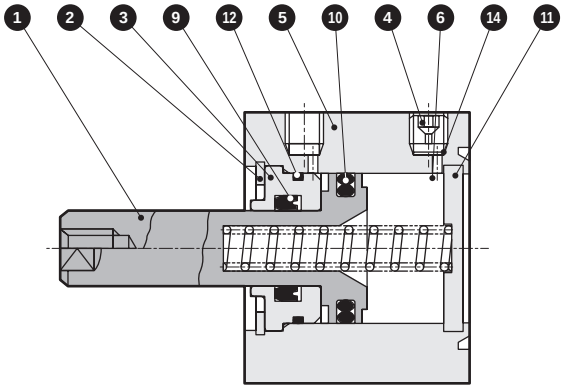

No.	Part name	Material	Remarks	No.	Part name	Material	Remarks
1	Piston	Stainless steel		8	Magnet	Plastic	
				9	Rod packing	Nitrile rubber	
2	C-snap ring	Steel	Zinc phosphate	10	Piston packing	Nitrile rubber	
3	Rod metal	Special aluminum alloy	Alumite	11	Cover	ø12 to ø25: Stainless steel ø32 to ø50: Aluminum alloy	ø32 to ø50: Alumite
4	Plug	Stainless steel					
5	Body	Aluminum alloy	Hard alumite	12	Metal gasket	Nitrile rubber	
6	Spring	Piano wire	Electrodeposition	13	Round S type snap ring	Steel	Zinc phosphate
7	Spacer	Aluminum alloy	Chromate	14	Stainless steel wire mesh	Stainless steel	

Repair parts list

Bore size (mm)	Kit No.	Repair parts No.
ø12	SSD2-Y-12K	9 10 12
ø16	SSD2-Y-16K	
ø20	SSD2-Y-20K	
ø25	SSD2-Y-25K	
ø32	SSD2-Y-32K	
ø40	SSD2-Y-40K	
ø50	SSD2-Y-50K	

SCP*3
CMK2
CMA2
SCM
SCG
SCA2
SCS2
CKV2
CAV2/COVP/N2
SSD2
SSG
SSD
CAT
MDC2
MVC
SMG
MSD/MSDG
FC*
STK
SRL3
SRG3
SRM3
SRT3
MRL2
MRG2
SM-25
ShkAbs
FJ
FK
Spd Contr
Ending

Dimensions CAD

● SSD2-XL-12 to 25 (with switch)

ø12/ø16

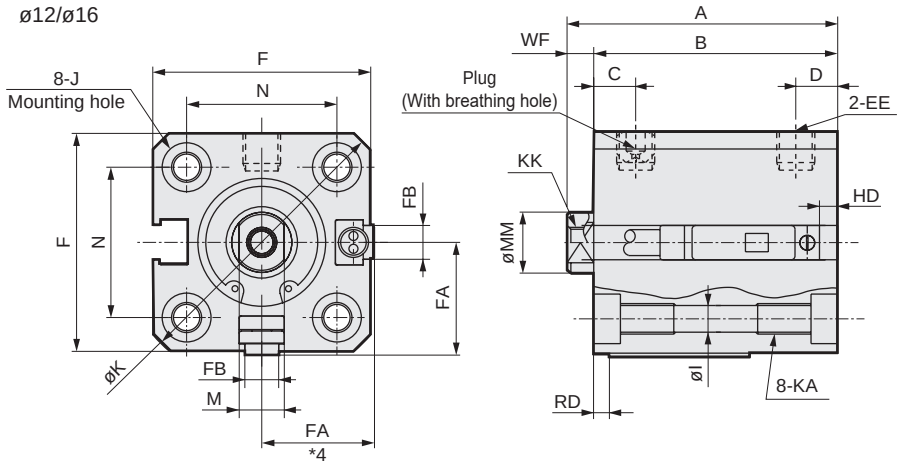

● Rod end male thread

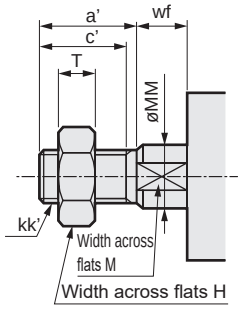

ø20/ø25

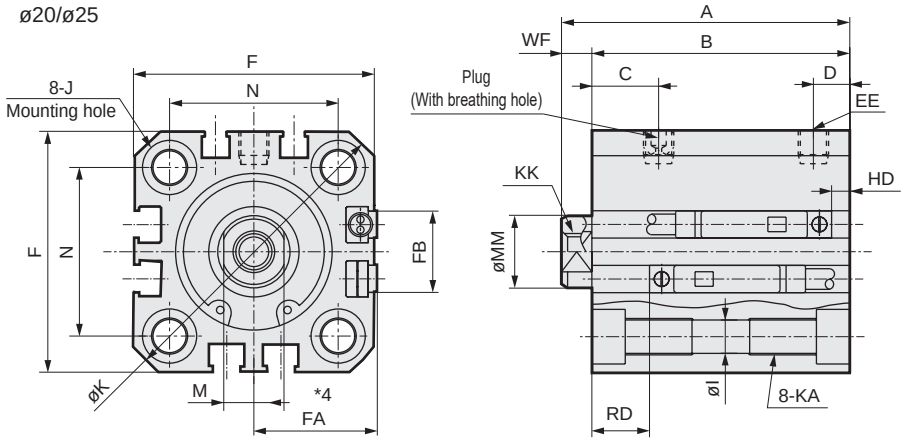

Code / Bore size (mm)		Common dimensions with switch																
		A	B	C	D	EE	F	FA *4	FB	I	J	K	KA	KK	M	MM	N	WF
ø12	Stroke 5	30.5	27	5.5	5.5	M5	25	13 (16.5)	4.5	3.5	6.5 spot face depth 3.5	32	M4 depth 7	M3 depth 6	5	6	15.5	3.5
	Stroke 10	35.5	32															
ø16	Stroke 5	30.5	27	5.5	5.5	M5	29	15 (18.5)	4.5	3.5	6.5 spot face depth 3.5	38	M4 depth 7	M4 depth 8	6	8	20	3.5
	Stroke 10	35.5	32															
ø20	Stroke 5	39	34.5	8	5.5	M5	36	18.5 (22)	12.5	5.5	9 spot face depth 5.5	47	M6 depth 11	M5 depth 7	8	10	25.5	4.5
	Stroke 10	44	39.5															
ø25	Stroke 5	42.5	37.5	11	6	M5	40	20.5 (24)	13.5	5.5	9 spot face depth 5.5	51	M6 depth 11	M6 depth 12	10	12	28	5
	Stroke 10	47.5	42.5															

Switch dimensions	Reed T0H/T0V, T5H/T5V		Proximity T2H/T2V, T3H/T3V		Proximity T2WH/T2WV, T3WH T3WV		Proximity F2H/F2V, F3H/F3V, F2YH/F2YV, F3YH/F3YV		Proximity F2S/F3S	
Bore size (mm)	HD	RD	HD	RD	HD	RD	HD	RD	HD	RD
ø12	0	3	0	3	2	5				
ø16	0	4	0	4.5	1	6				
ø20	3	7.5	3	7.5	5	9.5	7.5	12	6.5	11
ø25	4	9.5	4	9.5	6	11.5	8.5	14	7.5	13

*1 : Only F-switch is available for the ø20 or ø25 piping port surface.
*2 : HD and RD dimensions for 5 mm stroke differ from these dimensions according to the setting.
3 : Refer to page 1044 for HD, RD and protruding dimensions of the 2-color LED, off-delay, AC magnetic field proof, T1 and T8* switches.
*4 : Dimensions in ( ) of FA are for the L-shaped lead wire.
*5 : For dimensions of individual accessories, refer to pages 1046 to 1049.

● Rod end male thread

Code / Bore size (mm)	a'	c'	H	kk'	M	MM	T	wf
ø12	10.5	9	8	M5	5	6	3.2	3.5
ø16	12	10	10	M6	6	8	3.6	3.5
ø20	14	12	13	M8	8	10	5	4.5
ø25	17.5	15	17	M10x1.25	10	12	6	5

Dimensions with mounting bracket

● Axial foot (LB) with switch
SSD2-XL-12 to 25 -LB

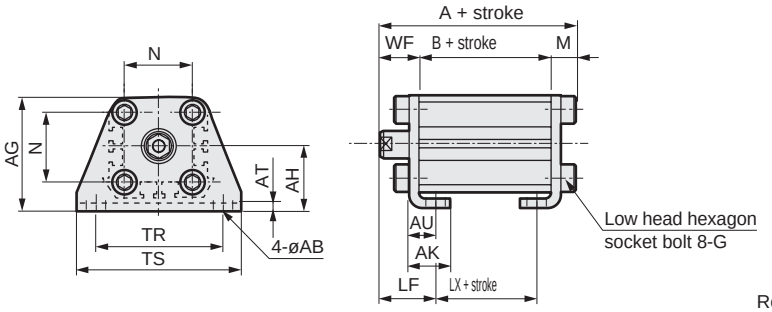

Rod end male thread

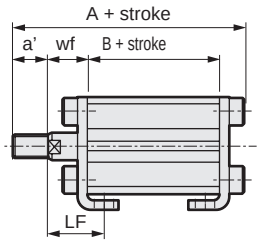

● Clevis bracket (CB) with switch
SSD2-XL-12 to 25 -CB

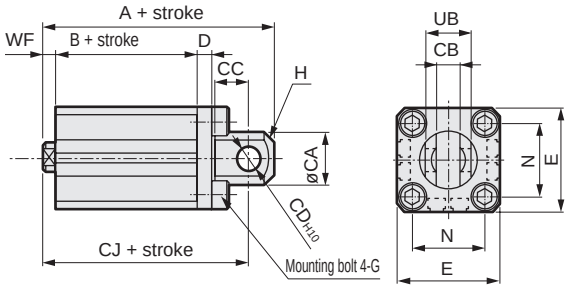

Rod end male thread

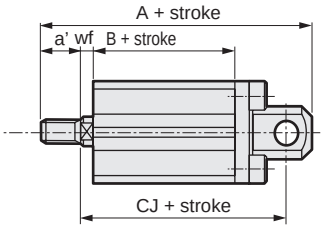

Code / Bore size (mm)	Common dimensions				Female thread						
	AB	AG	AH	AK	AT	AU	G	N	TR	TS	M
ø12	5	29.5	17	12.5	2	8	M4x10	15.5	34	44	4.8
ø16	5	33.5	19	13	2	8	M4x10	20	38	48	4.8
ø20	7	42	24	15	3.2	9.2	M6x16	25.5	48	62	7.2
ø25	7	46	26	16.5	3.2	10.7	M6x16	28	52	66	7.2

Code / Bore size (mm)	Male thread										
	WF	LF	A	B	LX	a'	wf	LF	A	B	LX
ø12	13.5	19.5	40.3	22	10	10.5	13.5	19.5	50.8	22	10
ø16	13.5	19.5	40.3	22	10	12	13.5	19.5	52.3	22	10
ø20	14.5	20.5	51.2	29.5	17.5	14	14.5	20.5	65.2	29.5	17.5
ø25	15	22.5	54.7	32.5	17.5	17.5	15	22.5	72.2	32.5	17.5

Code / Bore size (mm)	Common dimensions									
	CA	CB	CC	CD	D	E	G	H	N	UB
ø12	12	5.2 $^{+0.2}_{0}$	7	5	4	25	M4x12	C1.5	15.5	10 $^{-0.1}_{-0.3}$
ø16	15	6.6 $^{+0.3}_{0}$	8	5	5	29	M4x12	C2	20	12 $^{-0.1}_{-0.4}$
ø20	20	8.2 $^{+0.2}_{0}$	12	8	5	36	M6x16	C4	25.5	16 $^{-0.1}_{-0.3}$
ø25	24	10.2 $^{+0.2}_{0}$	14	10	5	40	M6x16	C5	28	20 $^{-0.1}_{-0.3}$

Code / Bore size (mm)	Female thread				Male thread				
	WF	With switch			a'	wf	With switch		
		A	B	CJ			A	B	CJ
ø12	3.5	45.5	22	39.5	10.5	3.5	56	22	39.5
ø16	3.5	46.5	22	40.5	12	3.5	58.5	22	40.5
ø20	4.5	61	29.5	52	14	4.5	75	29.5	52
ø25	5	67.5	32.5	57.5	17.5	5	85	32.5	57.5

● Rod side flange (FA) with switch
SSD2-XL-12 to 25 -FA

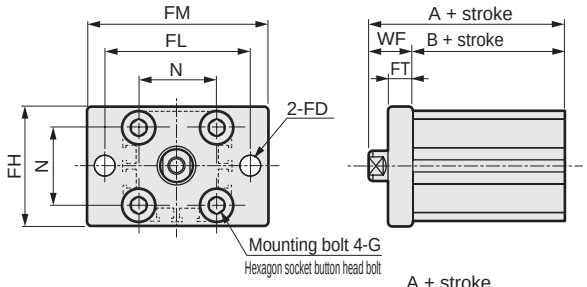

Rod end male thread

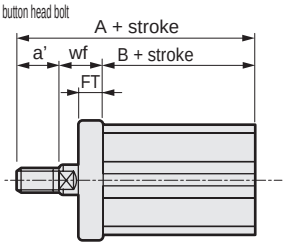

● Head side flange (FB) with switch
SSD2-XL-12 to 25 -FB

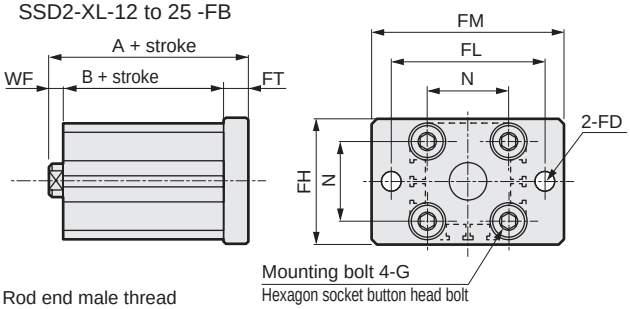

Rod end male thread

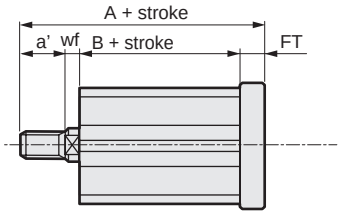

Code / Bore size (mm)	Common dimensions						
	FD	FH	FL	FM	FT	N	G
ø12	4.5	25	45	55	5.5	15.5	M4x12
ø16	4.5	30	45	55	5.5	20	M4x12
ø20	6.6	39	48	60	8	25.5	M6x16
ø25	6.6	42	52	64	8	28	M6x16

Code / Bore size (mm)	Female thread			Male thread			
	WF	A	B	a'	wf	A	B
ø12	13.5	35.5	22	10.5	13.5	46	22
ø16	13.5	35.5	22	12	13.5	47.5	22
ø20	14.5	44	29.5	14	14.5	58	29.5
ø25	15	47.5	32.5	17.5	15	65	32.5

Code / Bore size (mm)	Common dimensions						
	FD	FH	FL	FM	FT	N	G
ø12	4.5	25	45	55	5.5	15.5	M4x12
ø16	4.5	30	45	55	5.5	20	M4x12
ø20	6.6	39	48	60	8	25.5	M6x16
ø25	6.6	42	52	64	8	28	M6x16

Code / Bore size (mm)	Female thread			Male thread			
	WF	With switch		a'	wf	With switch	
		A	B			A	B
ø12	3.5	31	22	10.5	3.5	41.5	22
ø16	3.5	31	22	12	3.5	43	22
ø20	4.5	42	29.5	14	4.5	56	29.5
ø25	5	45.5	32.5	17.5	5	63	32.5

SCP*3
CMK2
CMA2
SCM
SCG
SCA2
SCS2
CKV2
CAV2/COVP/N2
SSD2
SSG
SSD
CAT
MDC2
MVC
SMG
MSD/MSDG
FC*
STK
SRL3
SRG3
SRM3
SRT3
MRL2
MRG2
SM-25
ShkAbs
FJ
FK
Spd Contr
Ending

Dimensions CAD

● SSD2-X-12 to 25 (without switch)

ø12/ø16

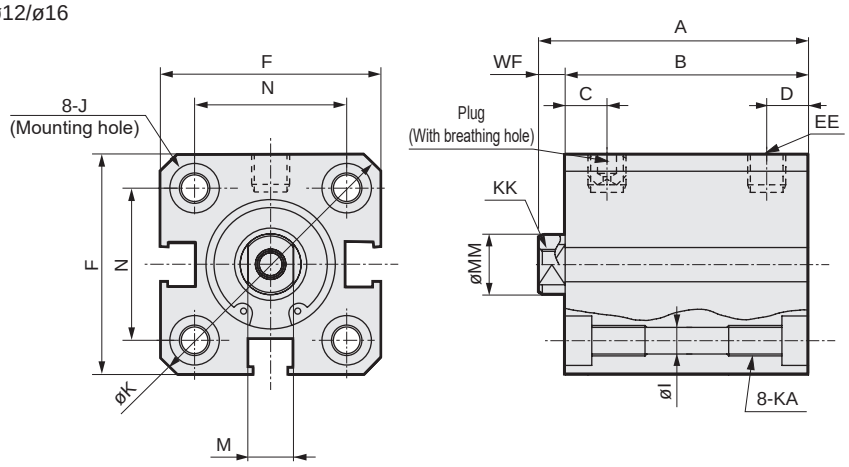

● Rod end male thread

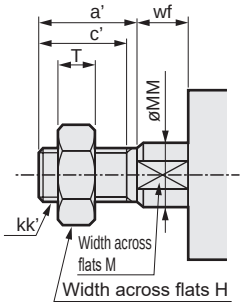

ø20/ø25

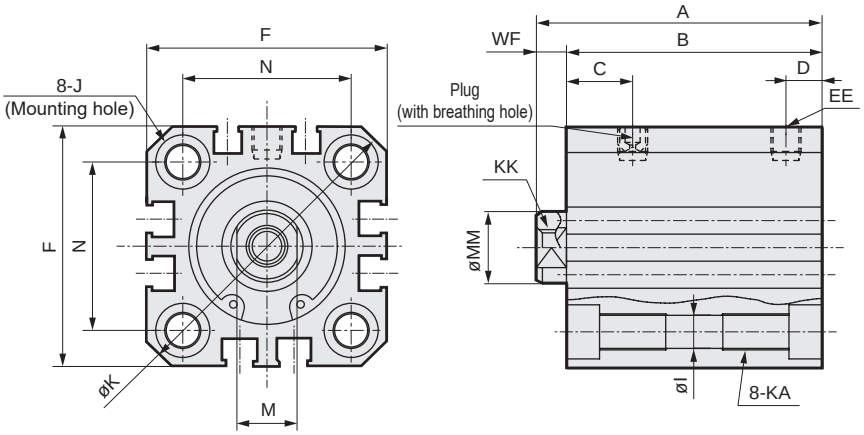

Code / Bore size (mm)			Dimensions without switch and common dimensions														
			A	B	C	D	EE	F	I	J	K	KA	KK	M	MM	N	WF
ø12	Stroke	5	25.5	22	5.5	5.5	M5	25	3.5	6.5 spot face depth 3.5	32	M4 depth 7	M3 depth 6	5	6	15.5	3.5
		10	30.5	27													
ø16	Stroke	5	25.5	22	5.5	5.5	M5	29	3.5	6.5 spot face depth 3.5	38	M4 depth 7	M4 depth 8	6	8	20	3.5
		10	30.5	27													
ø20	Stroke	5	29	24.5	8	5.5	M5	36	5.5	9 spot face depth 5.5	47	M6 depth 11	M5 depth 7	8	10	25.5	4.5
		10	34	29.5													
ø25	Stroke	5	32.5	27.5	11	6	M5	40	5.5	9 spot face depth 5.5	51	M6 depth 11	M6 depth 12	10	12	28	5
		10	37.5	32.5													

● Dimensions of rod end male thread part

Code / Bore size (mm)	a'	c'	H	kk'	M	MM	T	wf
ø12	10.5	9	8	M5	5	6	3.2	3.5
ø16	12	10	10	M6	6	8	3.6	3.5
ø20	14	12	13	M8	8	10	5	4.5
ø25	17.5	15	17	M10x1.25	10	12	6	5

*1: For dimensions of individual accessories, refer to pages 1046 to 1049.

Dimensions with mounting bracket

CAD

● Axial foot (LB) without switch
SSD2-X-12 to 25 -LB

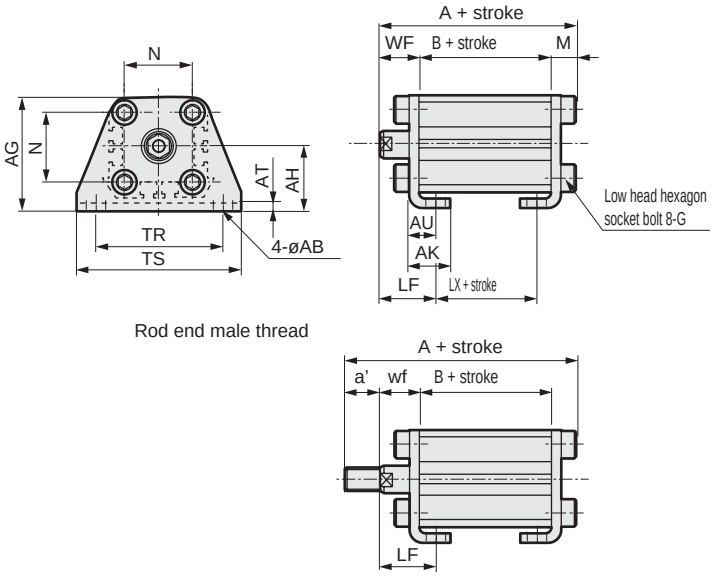

Code / Bore size (mm)	Common dimensions AB	AG	AH	AK	Female thread AT	AU	G	N	TR	TS	M
ø12	5	29.5	17	12.5	2	8	M4x10	15.5	34	44	4.8
ø16	5	33.5	19	13	2	8	M4x10	20	38	48	4.8
ø20	7	42	24	15	3.2	9.2	M6x16	25.5	48	62	7.2
ø25	7	46	26	16.5	3.2	10.7	M6x16	28	52	66	7.2

Code / Bore size (mm)	Female thread WF	LF	A	B	LX	Male thread a'	wf	LF	A	B	LX
ø12	13.5	19.5	35.3	17	5	10.5	13.5	19.5	45.8	17	5
ø16	13.5	19.5	35.3	17	5	12	13.5	19.5	47.3	17	5
ø20	14.5	20.5	41.2	19.5	7.5	14	14.5	20.5	55.2	19.5	7.5
ø25	15	22.5	44.7	22.5	7.5	17.5	15	22.5	62.2	22.5	7.5

Note: ø20: LB cannot be selected for 5 mm stroke.

● Clevis bracket (CB) without switch
SSD2-X-12 to 25 -CB

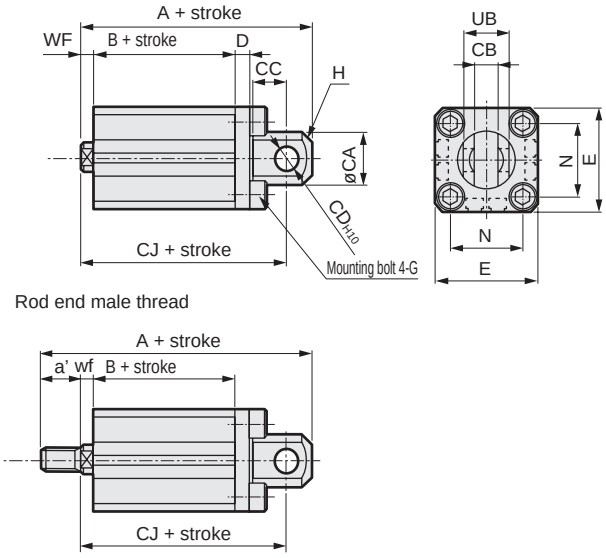

Code / Bore size (mm)	Common dimensions CA	CB	CC	CD	D	E	G	H	N	UB
ø12	12	$5.2^{+0.2}_{0}$	7	5	4	25	M4x12	C1.5	15.5	$10^{-0.1}_{-0.3}$
ø16	15	$6.6^{+0.3}_{0}$	8	5	5	29	M4x12	C2	20	$12^{-0.1}_{-0.4}$
ø20	20	$8.2^{+0.2}_{0}$	12	8	5	36	M6x16	C4	25.5	$16^{-0.1}_{-0.3}$
ø25	24	$10.2^{+0.2}_{0}$	14	10	5	40	M6x16	C5	28	$20^{-0.1}_{-0.3}$

Code / Bore size (mm)	Female thread WF	No switch A	B	CJ	Male thread a'	wf	No switch A	B	CJ
ø12	3.5	40.5	17	34.5	10.5	3.5	51	17	34.5
ø16	3.5	41.5	17	35.5	12	3.5	53.5	17	35.5
ø20	4.5	51	19.5	42	14	4.5	65	19.5	42
ø25	5	57.5	22.5	47.5	17.5	5	75	22.5	47.5

● Rod side flange (FA) without switch
SSD2-X-12 to 25 -FA

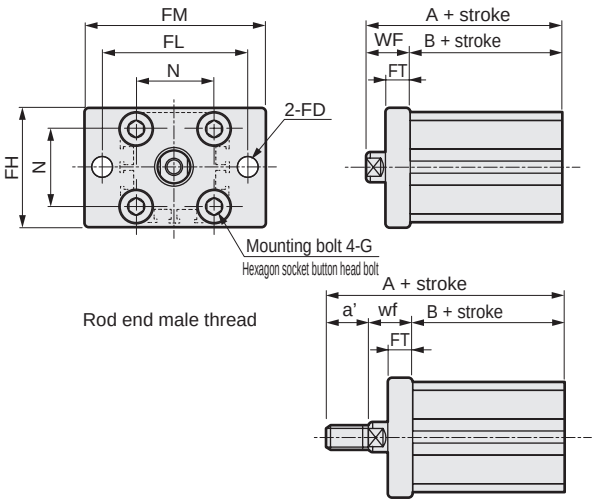

Code / Bore size (mm)	Common dimensions FD	FH	FL	FM	FT	N	G
ø12	4.5	25	45	55	5.5	15.5	M4x12
ø16	4.5	30	45	55	5.5	20	M4x12
ø20	6.6	39	48	60	8	25.5	M6x16
ø25	6.6	42	52	64	8	28	M6x16

Code / Bore size (mm)	Female thread WF	A	B	Male thread a'	wf	A	B
ø12	13.5	30.5	17	10.5	13.5	41	17
ø16	13.5	30.5	17	12	13.5	42.5	17
ø20	14.5	34	19.5	14	14.5	48	19.5
ø25	15	37.5	22.5	17.5	15	55	22.5

● Head side flange (FB) without switch
SSD2-X-12 to 25 -FB

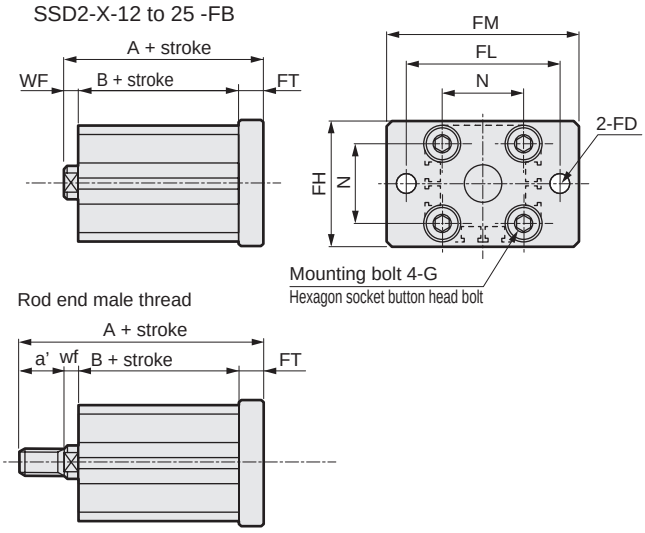

Code / Bore size (mm)	Common dimensions FD	FH	FL	FM	FT	N	G
ø12	4.5	25	45	55	5.5	15.5	M4x12
ø16	4.5	30	45	55	5.5	20	M4x12
ø20	6.6	39	48	60	8	25.5	M6x16
ø25	6.6	42	52	64	8	28	M6x16

Code / Bore size (mm)	Female thread WF	No switch A	B	Male thread a'	wf	No switch A	B
ø12	3.5	26	17	10.5	3.5	36.5	17
ø16	3.5	26	17	12	3.5	38	17
ø20	4.5	32	19.5	14	4.5	46	19.5
ø25	5	35.5	22.5	17.5	5	53	22.5

SCP*3
CMK2
CMA2
SCM
SCG
SCA2
SCS2
CKV2
CAV2/ COVP/N2
SSD2
SSG
SSD
CAT
MDC2
MVC
SMG
MSD/ MSDG
FC*
STK
SRL3
SRG3
SRM3
SRT3
MRL2
MRG2
SM-25
ShkAbs
FJ
FK
Spd Contr
Ending

Dimensions CAD

● SSD2-XL-32 to 50 (with switch)

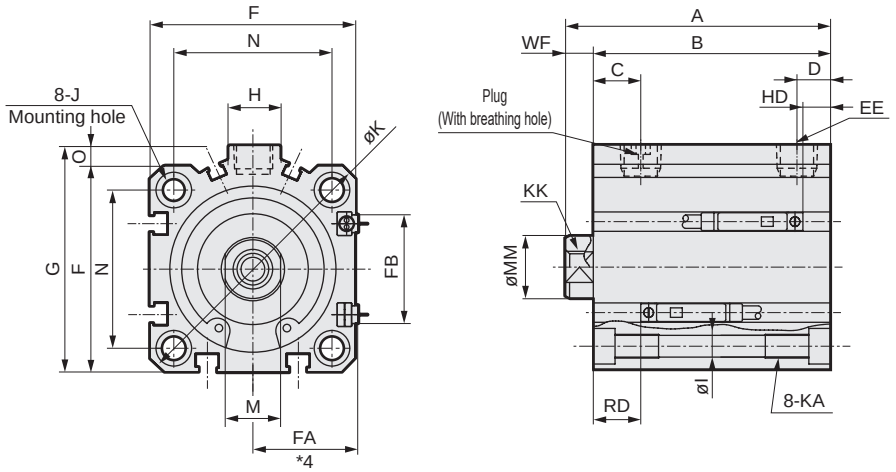

● Rod end male thread

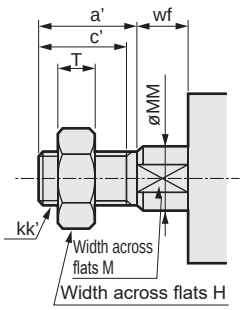

● SSD2-X-32 to 50 (without switch)

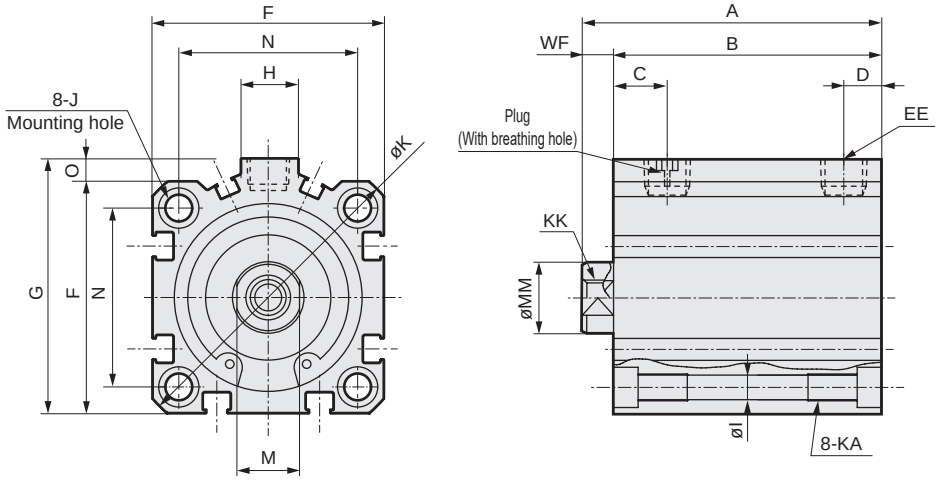

Code		No switch		Common dimensions with switch																		
Bore size (mm)		A	B	A	B	C *7	D *7	EE *6	F	FA *4	FB	G	H	I	J	K	KA	KK	M	MM	N	O	WF
ø32	Stroke 5	35	28	45	38	8 (10)	8 (5.5)	Rc1/8	45	23(26.5)	20.5	49.5	12.5	5.5	9 spot face depth 5.5	60	M6 depth 11	M8 depth 13	14	16	34	4.5	7
	Stroke 10	40	33	50	43																		
ø40	Stroke 5	41.5	34.5	51.5	44.5	12 (11.5)	8.5 (8)	Rc1/8	52	26.5(30)	27.5	57	15	5.5	9 spot face depth 5.5	69	M6 depth 11	M8 depth 13	14	16	40	5	7
	Stroke 10	46.5	39.5	56.5	49.5																		
ø50	Stroke 10	48.5	40.5	58.5	50.5	10.5	10.5	Rc1/4	64	32.5(36)	28.5	71	18	6.9	11 spot face depth 6.5	86	M8 depth 13	M10 depth 15	17	20	50	7	8
	Stroke 20	58.5	50.5	68.5	60.5																		

Switch dimensions	Reed T0H/T0V, T5H/T5V		Proximity T2H/T2V, T3H/T3V		Proximity T2WH/T2WV, T3WH/T3WV	
Bore size (mm)	HD *2	RD *2	HD *2	RD *2	HD	RD
ø32	4	9.5	4	9.5	6	11.5
ø40	7	12	7	12	8.5	13.5
ø50	7.5	12.5	7.5	12.5	9	14

*1 : To calculate A+ stroke or B+ stroke when using custom stroke, apply the next longer standard stroke (instead of the custom stroke) to the stroke value. (Example) If the custom stroke is 7 mm, apply the standard stroke of 10 mm.
*2 : HD and RD dimensions for 5 mm stroke differ from these dimensions according to the setting.
3 : Refer to page 1044 for HD, RD and protruding dimensions of the 2-color LED, off-delay, AC magnetic field proof, T1 and T8* switches.
*4 : Dimensions in ( ) of FA are for the L-shaped lead wire.
*5 : For dimensions of individual accessories, refer to pages 1046 to 1049.
*6 : The ø32 bore size with a 5 mm stroke and without a switch has a port size of M5.*7 : Dimensions in ( ) of codes C and D are when the value is for a 5 mm stroke without switch.

● Rod end male thread

Code / Bore size (mm)	a'	c'	H	kk'	M	MM	T	wf
ø32	23.5	20.5	22	M14x1.5	14	16	8	5
ø40	23.5	20.5	22	M14x1.5	14	16	8	5
ø50	28.5	26	27	M18x1.5	17	20	11	5

Dimensions with mounting bracket

CAD

● Axial foot (LB)
SSD2-X(L)-32 to 50 -LB

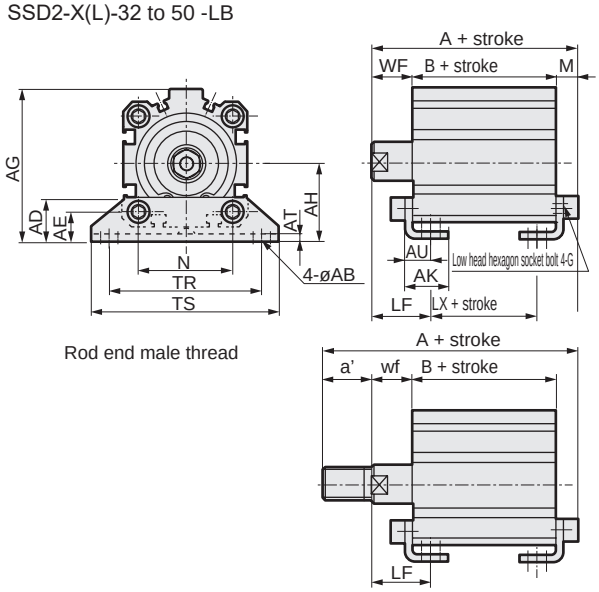

Code / Bore size (mm)	Common dimensions AB	AD	AE	AG	AH	AK	Female thread AT	AU	G	N	TR
ø32	7	18.5	13	57	30	17	3.2	11.2	M6x16	34	57
ø40	7	18	13	64	33	18.2	3.2	11.2	M6x16	40	64
ø50	9	22	14	78	39	22.7	3.2	14.7	M8x20	50	79

Code / Bore size (mm)	TS	M	WF	LF	No switch A	No switch B	No switch LX	With switch A	With switch B	With switch LX
ø32	71	7.2	17	25	47.2(57.2)	23(33)	7(17)	57.2	33	17
ø40	78	7.2	17	25	53.7(63.7)	29.5(39.5)	13.5(23.5)	63.7	39.5	23.5
ø50	95	8.2	18	29.5	56.7(66.7)	30.5(40.5)	7.5(17.5)	66.7	40.5	17.5

Code / Bore size (mm)	Male thread a'	wf	LF	No switch A	No switch B	No switch LX	With switch A	With switch B	With switch LX
ø32	23.5	15	23	68.7(78.7)	23(33)	7(17)	78.7	33	17
ø40	23.5	15	23	75.2(85.2)	29.5(39.5)	13.5(23.5)	85.2	39.5	23.5
ø50	28.5	15	26.5	82.2(92.2)	30.5(40.5)	7.5(17.5)	92.2	40.5	17.5

* Dimensions in ( ) are for strokes of more than 50 mm.

● Clevis bracket (CB)
SSD2-X(L)-32 to 50 -CB

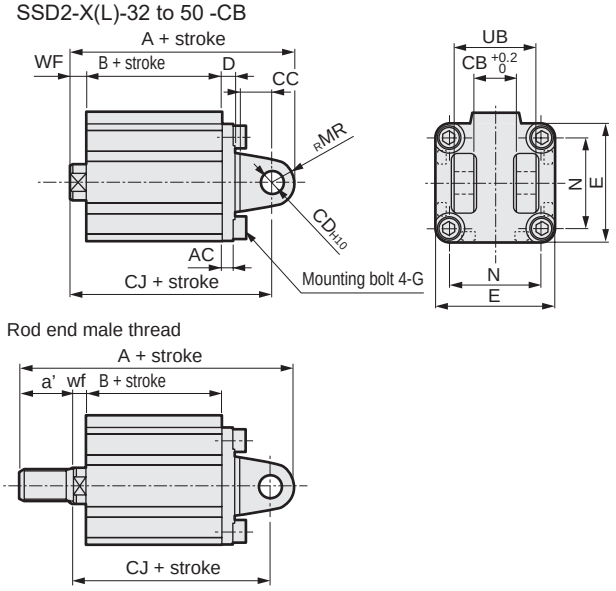

Code / Bore size (mm)	Common dimensions AC	CB	CC	CD	D	E	G	MR	N	UB
ø32	4.5	18.2	14	10	5	45	M6x16	10	34	36
ø40	5	18.2	14	10	6	52	M6x16	10	40	36
ø50	6	22.2	20	14	7	64	M8x20	14	50	44

Code / Bore size (mm)	Female thread WF	No switch A	No switch B	No switch CJ	With switch A	With switch B	With switch CJ
ø32	7	60	23	50	70	33	60
ø40	7	68.5	29.5	58.5	78.5	39.5	68.5
ø50	8	80.5	30.5	66.5	90.5	40.5	76.5

Code / Bore size (mm)	Male thread a'	wf	No switch A	No switch B	No switch CJ	With switch A	With switch B	With switch CJ
ø32	23.5	5	81.5	23	48	91.5	33	58
ø40	23.5	5	90	29.5	56.5	100	39.5	66.5
ø50	28.5	5	106	30.5	63.5	116	40.5	73.5

● Rod side flange (FA)
SSD2-X(L)-32 to 50 -FA

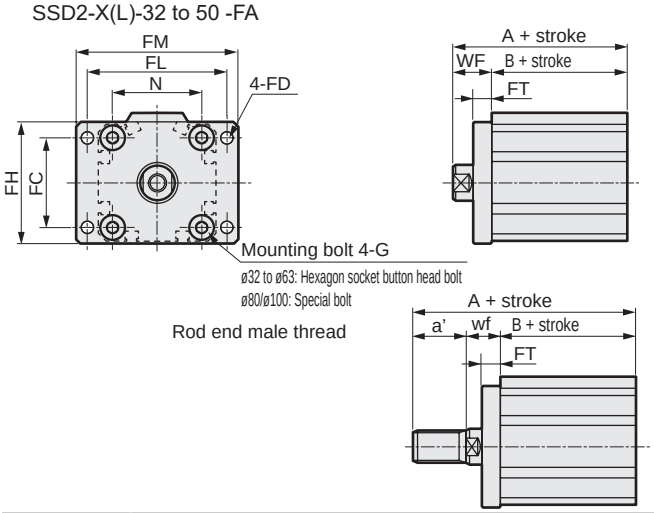

Code / Bore size (mm)	Common dimensions FC	FD	FH	FL	FM	FT	N	G
ø32	34	5.5	48	56	65	8	34	M6x16
ø40	40	5.5	54	62	72	8	40	M6x16
ø50	50	6.6	67	76	89	9	50	M8x20

Code / Bore size (mm)	Female thread WF	No switch A	No switch B	With switch A	With switch B
ø32	17	40(50)	23(33)	50	33
ø40	17	46.5(56.5)	29.5(39.5)	56.5	39.5
ø50	18	48.5(58.5)	30.5(40.5)	58.5	40.5

Code / Bore size (mm)	Male thread a'	wf	No switch A	No switch B	With switch A	With switch B
ø32	23.5	15	61.5(71.5)	23(33)	71.5	33
ø40	23.5	15	68(78)	29.5(39.5)	78	39.5
ø50	28.5	15	74(84)	30.5(40.5)	84	40.5

* Dimensions in ( ) are for strokes of more than 50 mm.

● Head side flange (FB)
SSD2-X(L)-32 to 50 -FB

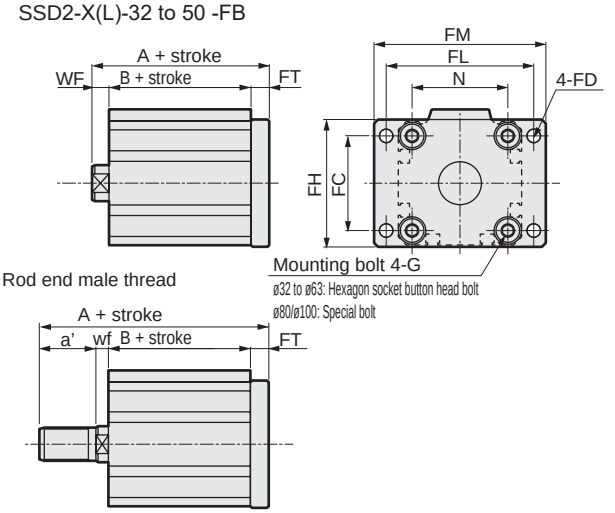

Code / Bore size (mm)	Common dimensions FC	FD	FH	FL	FM	FT	N	G
ø32	34	5.5	48	56	65	8	34	M6x16
ø40	40	5.5	54	62	72	8	40	M6x16
ø50	50	6.6	67	76	89	9	50	M8x20

Code / Bore size (mm)	Female thread WF	No switch A	No switch B	With switch A	With switch B
ø32	7	38	23	48	33
ø40	7	44.5	29.5	54.5	39.5
ø50	8	47.5	30.5	57.5	40.5

Code / Bore size (mm)	Male thread a'	wf	No switch A	No switch B	With switch A	With switch B
ø32	23.5	5	59.5	23	69.5	33
ø40	23.5	5	66	29.5	76	39.5
ø50	28.5	5	73	30.5	83	40.5

SCP*3
CMK2
CMA2
SCM
SCG
SCA2
SCS2
CKV2
CAV2/COVP/N2
SSD2
SSG
SSD
CAT
MDC2
MVC
SMG
MSD/MSDG
FC*
STK
SRL3
SRG3
SRM3
SRT3
MRL2
MRG2
SM-25
ShkAbs
FJ
FK
Spd Contr
Ending

Dimensions CAD

● SSD2-YL-12 to 25 (with switch)

ø12/ø16

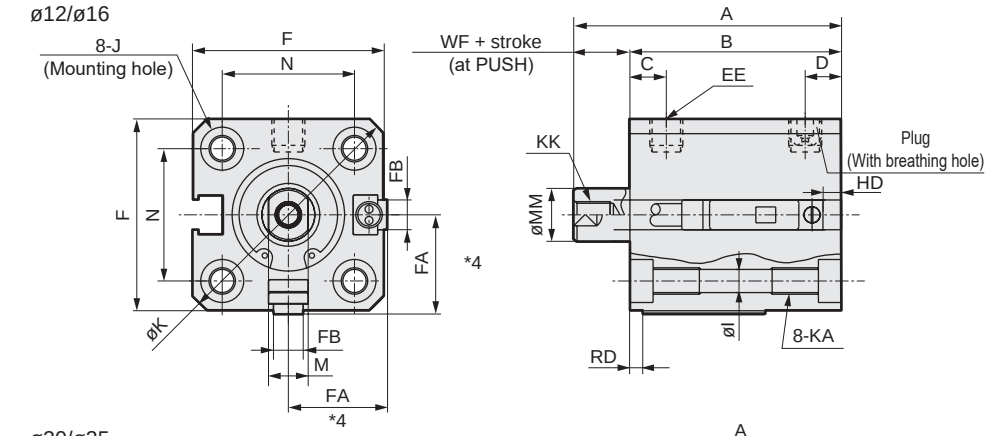

● Rod end male thread

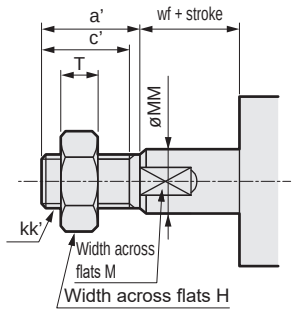

ø20/ø25

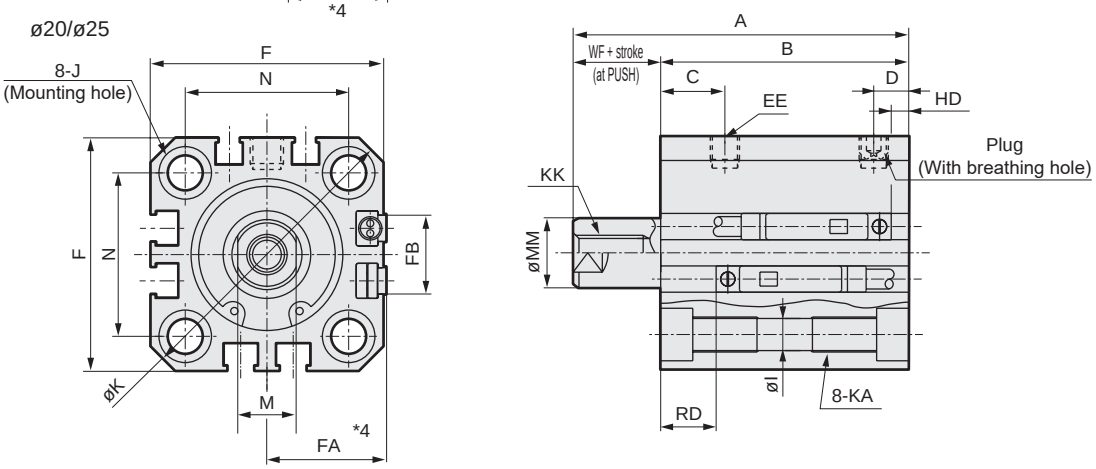

Code / Bore size (mm)			Common dimensions with switch																
			A	B	C	D	EE	F	FA *4	FB	I	J	K	KA	KK	M	MM	N	WF
ø12	Stroke	5	35.5	27	5.5	5.5	M5	25	13(16.5)	4.5	3.5	6.5 spot face depth 3.5	32	M4 Depth 7	M3 Depth 6	5	6	15.5	3.5
		10	45.5	32															
ø16	Stroke	5	35.5	27	5.5	5.5	M5	29	15(18.5)	4.5	3.5	6.5 spot face depth 3.5	38	M4 Depth 7	M4 Depth 8	6	8	20	3.5
		10	45.5	32															
ø20	Stroke	5	44	34.5	8	5.5	M5	36	18.5(22)	12.5	5.5	9 spot face Depth 5.5	47	M6 Depth 11	M5 Depth 7	8	10	25.5	4.5
		10	54	39.5															
ø25	Stroke	5	47.5	37.5	11	6	M5	40	20.5(24)	13.5	5.5	9 spot face Depth 5.5	51	M6 Depth 11	M6 Depth 12	10	12	28	5
		10	57.5	42.5															

Switch dimensions / Bore size (mm)	Reed T0H/T0V, T5H/T5V		Proximity T2H/T2V, T3H/T3V		Proximity T2WH/T2WV, T3WH T3WV		Proximity F2H/F2V, F3H/F3V, F2YH/F2YV, F3YH/F3YV		Proximity F2S/F3S	
	HD	RD	HD	RD	HD	RD	HD	RD	HD	RD
ø12	1.5	1.5	1.5	1.5	3.5	3.5				
ø16	0	4	0	4.5	1	6				
ø20	3	7.5	3	7.5	5	9.5	7.5	12	6.5	11
ø25	4	9.5	4	9.5	6	11.5	8.5	14	7.5	13

*1 : Only F-switch is available for the ø20 or ø25 piping port surface.
*2 : HD and RD dimensions for 5 mm stroke differ from these dimensions according to the setting.
3: Refer to page 1044 for HD, RD and protruding dimensions of the 2-color LED, off-delay, AC magnetic field proof, T1 and T8* switches.
*4 : Dimensions in ( ) of FA are for the L-shaped lead wire.
*5 : For dimensions of individual accessories, refer to pages 1046 to 1049.

● Rod end male thread

Code / Bore size (mm)	a'	c'	H	kk'	M	MM	T	wf
ø12	10.5	9	8	M5	5	6	3.2	3.5
ø16	12	10	10	M6	6	8	3.6	3.5
ø20	14	12	13	M8	8	10	5	4.5
ø25	17.5	15	17	M10x1.25	10	12	6	5

Dimensions with mounting bracket

CAD

● Axial foot (LB) with switch
SSD2-YL-12 to 25 -LB

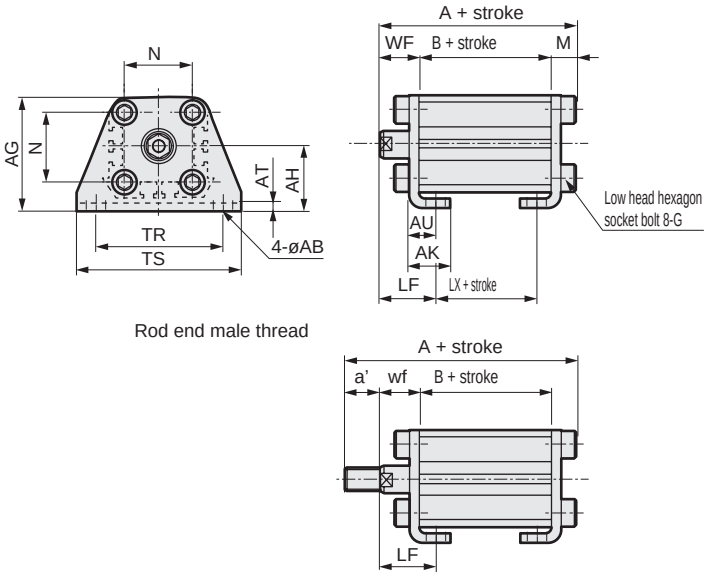

Code	Common dimensions						Female thread				
Bore size (mm)	AB	AG	AH	AK	AT	AU	G	N	TR	TS	M
ø12	5	29.5	17	12.5	2	8	M4x10	15.5	34	44	4.8
ø16	5	33.5	19	13	2	8	M4x10	20	38	48	4.8
ø20	7	42	24	15	3.2	9.2	M6x16	25.5	48	62	7.2
ø25	7	46	26	16.5	3.2	10.7	M6x16	28	52	66	7.2

Code						Male thread					
Bore size (mm)	WF	LF	A	B	LX	a'	wf	LF	A	B	LX
ø12	13.5	19.5	40.3	22	10	10.5	13.5	19.5	50.8	22	10
ø16	13.5	19.5	40.3	22	10	12	13.5	19.5	52.3	22	10
ø20	14.5	20.5	51.2	29.5	17.5	14	14.5	20.5	65.2	29.5	17.5
ø25	15	22.5	54.7	32.5	17.5	17.5	15	22.5	72.2	32.5	17.5

● Clevis bracket (CB) with switch
SSD2-YL-12 to 25 -CB

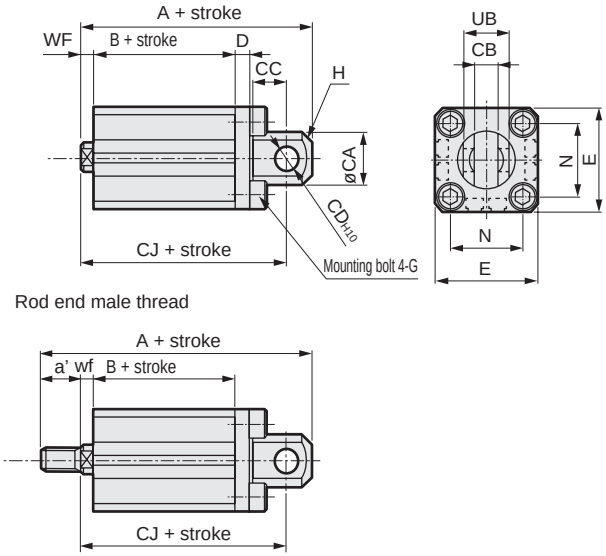

Code	Common dimensions									
Bore size (mm)	CA	CB	CC	CD	D	E	G	H	N	UB
ø12	12	5.2 $^{+0.2}_{0}$	7	5	4	25	M4x12	C1.5	15.5	10 $^{-0.1}_{-0.3}$
ø16	15	6.6 $^{+0.3}_{0}$	8	5	5	29	M4x12	C2	20	12 $^{-0.1}_{-0.4}$
ø20	20	8.2 $^{+0.2}_{0}$	12	8	5	36	M6x16	C4	25.5	16 $^{-0.1}_{-0.3}$
ø25	24	10.2 $^{+0.2}_{0}$	14	10	5	40	M6x16	C5	28	20 $^{-0.1}_{-0.3}$

Code	Female thread				Male thread				
Bore size (mm)	WF	With switch			a'	wf	With switch		
		A	B	CJ			A	B	CJ
ø12	3.5	45.5	22	39.5	10.5	3.5	56	22	39.5
ø16	3.5	46.5	22	40.5	12	3.5	58.5	22	40.5
ø20	4.5	61	29.5	52	14	4.5	75	29.5	52
ø25	5	67.5	32.5	57.5	17.5	5	85	32.5	57.5

● Rod side flange (FA) with switch
SSD2-YL-12 to 25 -FA

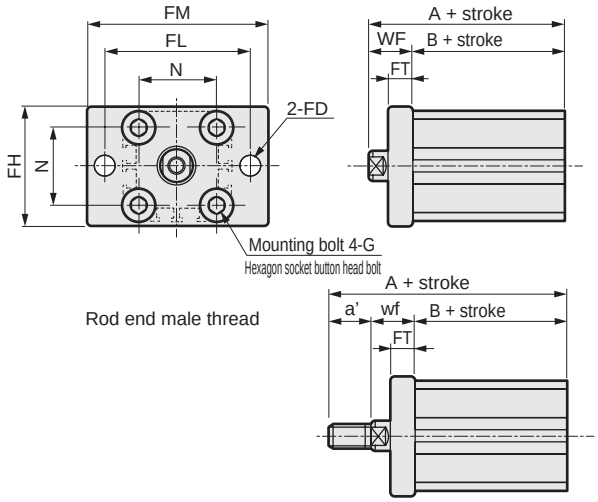

Code	Common dimensions						
Bore size (mm)	FD	FH	FL	FM	FT	N	G
ø12	4.5	25	45	55	5.5	15.5	M4x12
ø16	4.5	30	45	55	5.5	20	M4x12
ø20	6.6	39	48	60	8	25.5	M6x16
ø25	6.6	42	52	64	8	28	M6x16

Code	Female thread			Male thread			
Bore size (mm)	WF	A	B	a'	wf	A	B
ø12	13.5	35.5	22	10.5	13.5	46	22
ø16	13.5	35.5	22	12	13.5	47.5	22
ø20	14.5	44	29.5	14	14.5	58	29.5
ø25	15	47.5	32.5	17.5	15	65	32.5

● Head side flange (FB) with switch
SSD2-YL-12 to 25 -FB

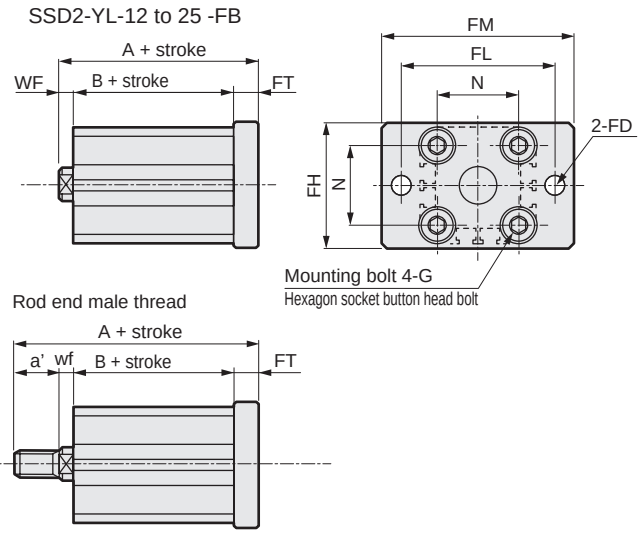

Code	Common dimensions						
Bore size (mm)	FD	FH	FL	FM	FT	N	G
ø12	4.5	25	45	55	5.5	15.5	M4x12
ø16	4.5	30	45	55	5.5	20	M4x12
ø20	6.6	39	48	60	8	25.5	M6x16
ø25	6.6	42	52	64	8	28	M6x16

Code	Female thread			Male thread			
Bore size (mm)	WF	With switch		a'	wf	With switch	
		A	B			A	B
ø12	3.5	31	22	10.5	3.5	41.5	22
ø16	3.5	31	22	12	3.5	43	22
ø20	4.5	42	29.5	14	4.5	46	29.5
ø25	5	45.5	32.5	17.5	5	63	32.5

SCP*3
CMK2
CMA2
SCM
SCG
SCA2
SCS2
CKV2
CAV2/COVP/N2
SSD2
SSG
SSD
CAT
MDC2
MVC
SMG
MSD/MSDG
FC*
STK
SRL3
SRG3
SRM3
SRT3
MRL2
MRG2
SM-25
ShkAbs
FJ
FK
Spd Contr
Ending

Dimensions CAD

● SSD2-Y-12 to 25 (without switch)

ø12/ø16

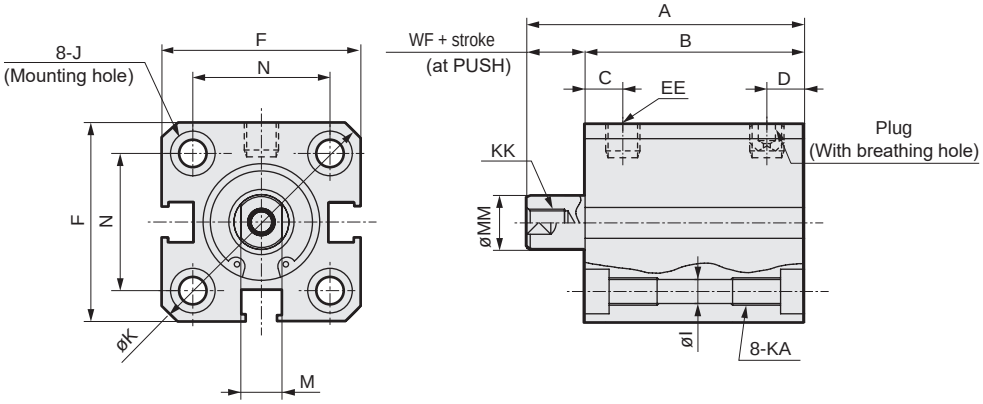

● Rod end male thread

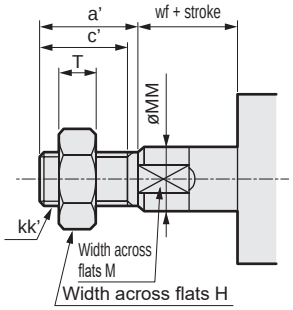

ø20/ø25

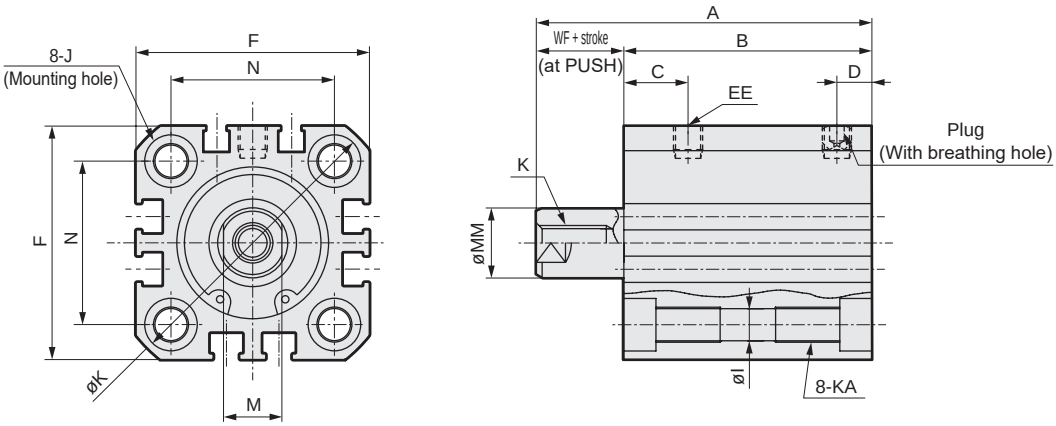

Code / Bore size (mm)		No switch														
		A	B	C	D	EE	F	I	J	K	KA	KK	M	MM	N	WF
ø12	Stroke 5	30.5	22	5.5	5.5	M5	25	3.5	6.5 spot face depth 3.5	32	M4 depth 7	M3 depth 6	5	6	15.5	3.5
	Stroke 10	40.5	27													3.5
ø16	Stroke 5	30.5	22	5.5	5.5	M5	29	3.5	6.5 spot face depth 3.5	38	M4 depth 7	M4 depth 8	6	8	20	3.5
	Stroke 10	40.5	27													3.5
ø20	Stroke 5	34	24.5	8	5.5	M5	36	5.5	9 spot face depth 5.5	47	M6 depth 11	M5 depth 7	8	10	25.5	4.5
	Stroke 10	44	29.5													4.5
ø25	Stroke 5	37.5	27.5	11	6	M5	40	5.5	9 spot face depth 5.5	51	M6 depth 11	M6 depth 12	10	12	28	5
	Stroke 10	47.5	32.5													5

● Dimensions of rod end male thread part

Code / Bore size (mm)	a'	c'	H	kk'	M	MM	T	wf
ø12	10.5	9	8	M5	5	6	3.2	3.5
ø16	12	10	10	M6	6	8	3.6	3.5
ø20	14	12	13	M8	8	10	5	4.5
ø25	17.5	15	17	M10x1.25	10	12	6	5

*1: For dimensions of individual accessories, refer to pages 1046 to 1049.

Dimensions with mounting bracket

CAD

● Axial foot (LB) without switch
SSD2-Y-12 to 25 -LB

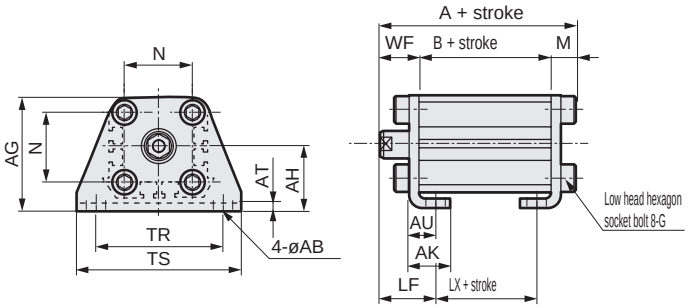

Rod end male thread

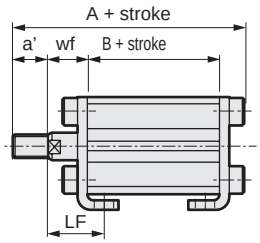

● Clevis bracket (CB) without switch
SSD2-Y-12 to 25 -CB

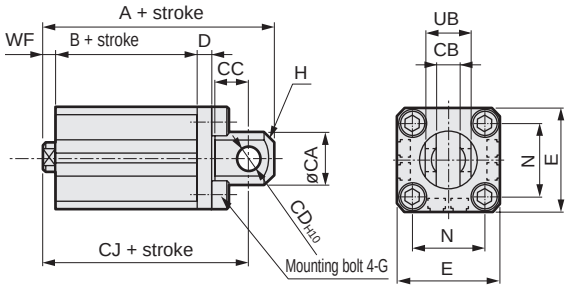

Rod end male thread

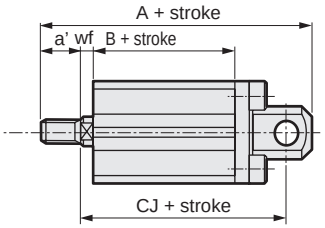

Code / Bore size (mm)	Common dimensions AB	AG	AH	AK	Female thread AT	AU	G	N	TR	TS	M
ø12	5	29.5	17	12.5	2	8	M4x10	15.5	34	44	4.8
ø16	5	33.5	19	13	2	8	M4x10	20	38	48	4.8
ø20	7	42	24	15	3.2	9.2	M6x16	25.5	48	62	7.2
ø25	7	46	26	16.5	3.2	10.7	M6x16	28	52	66	7.2

Code / Bore size (mm)	Male thread WF	LF	A	B	LX	a'	wf	LF	A	B	LX
ø12	13.5	19.5	35.3	17	5	10.5	13.5	19.5	45.8	17	5
ø16	13.5	19.5	35.3	17	5	12	13.5	19.5	47.3	17	5
ø20	14.5	20.5	41.2	19.5	7.5	14	14.5	20.5	55.2	19.5	7.5
ø25	15	22.5	44.7	22.5	7.5	17.5	15	22.5	62.2	22.5	7.5

Note: ø20: LB cannot be selected for 5 mm stroke.

Code / Bore size (mm)	Common dimensions CA	CB	CC	CD	D	E	G	H	N	UB
ø12	12	$5.2^{+0.2}_{0}$	7	5	4	25	M4x12	C1.5	15.5	$10^{-0.1}_{-0.3}$
ø16	15	$6.6^{+0.3}_{0}$	8	5	5	29	M4x12	C2	20	$12^{-0.1}_{-0.4}$
ø20	20	$8.2^{+0.2}_{0}$	12	8	5	36	M6x16	C4	25.5	$16^{-0.1}_{-0.3}$
ø25	24	$10.2^{+0.2}_{0}$	14	10	5	40	M6x16	C5	28	$20^{-0.1}_{-0.3}$

Code / Bore size (mm)	Female thread WF	No switch A	B	CJ	Male thread a'	wf	No switch A	B	CJ
ø12	3.5	40.5	17	34.5	10.5	3.5	51	17	34.5
ø16	3.5	41.5	17	35.5	12	3.5	53.5	17	35.5
ø20	4.5	51	19.5	42	14	4.5	65	19.5	42
ø25	5	57.5	22.5	47.5	17.5	5	75	22.5	47.5

● Rod side flange (FA) without switch
SSD2-Y-12 to 25 -FA

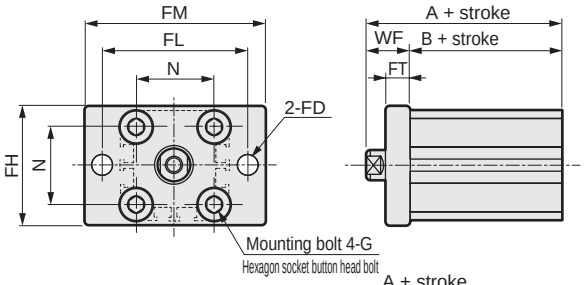

Rod end male thread

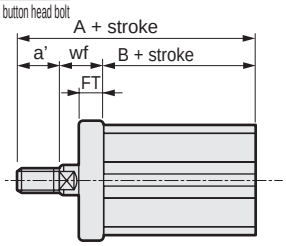

● Head side flange (FB) without switch
SSD2-Y-12 to 25 -FB

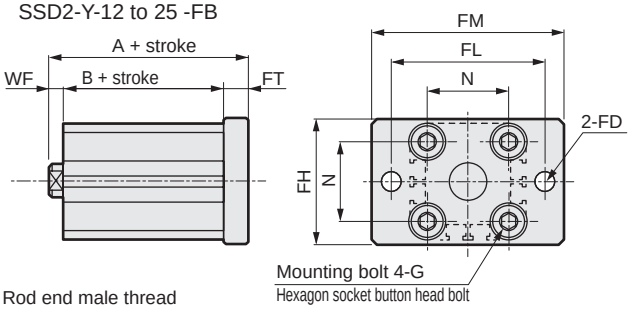

Rod end male thread

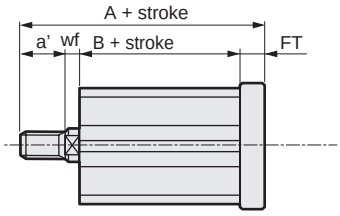

Code / Bore size (mm)	Common dimensions FD	FH	FL	FM	FT	N	G
ø12	4.5	25	45	55	5.5	15.5	M4x12
ø16	4.5	30	45	55	5.5	20	M4x12
ø20	6.6	39	48	60	8	25.5	M6x16
ø25	6.6	42	52	64	8	28	M6x16

Code / Bore size (mm)	Female thread WF	A	B	Male thread a'	wf	A	B
ø12	13.5	30.5	17	10.5	13.5	41	17
ø16	13.5	30.5	17	12	13.5	42.5	17
ø20	14.5	34	19.5	14	14.5	48	19.5
ø25	15	37.5	22.5	17.5	15	55	22.5

Code / Bore size (mm)	Common dimensions FD	FH	FL	FM	FT	N	G
ø12	4.5	25	45	55	5.5	15.5	M4x12
ø16	4.5	30	45	55	5.5	20	M4x12
ø20	6.6	39	48	60	8	25.5	M6x16
ø25	6.6	42	52	64	8	28	M6x16

Code / Bore size (mm)	Female thread WF	No switch A	B	Male thread a'	wf	No switch A	B
ø12	3.5	26	17	10.5	3.5	36.5	17
ø16	3.5	26	17	12	3.5	38	17
ø20	4.5	32	19.5	14	4.5	46	19.5
ø25	5	35.5	22.5	17.5	5	53	22.5

SCP*3
CMK2
CMA2
SCM
SCG
SCA2
SCS2
CKV2
CAV2/ COVP/N2
SSD2
SSG
SSD
CAT
MDC2
MVC
SMG
MSD/ MSDG
FC*
STK
SRL3
SRG3
SRM3
SRT3
MRL2
MRG2
SM-25
ShkAbs
FJ
FK
Spd Contr
Ending

Dimensions

● SSD2-YL-32 to 50 (with switch)

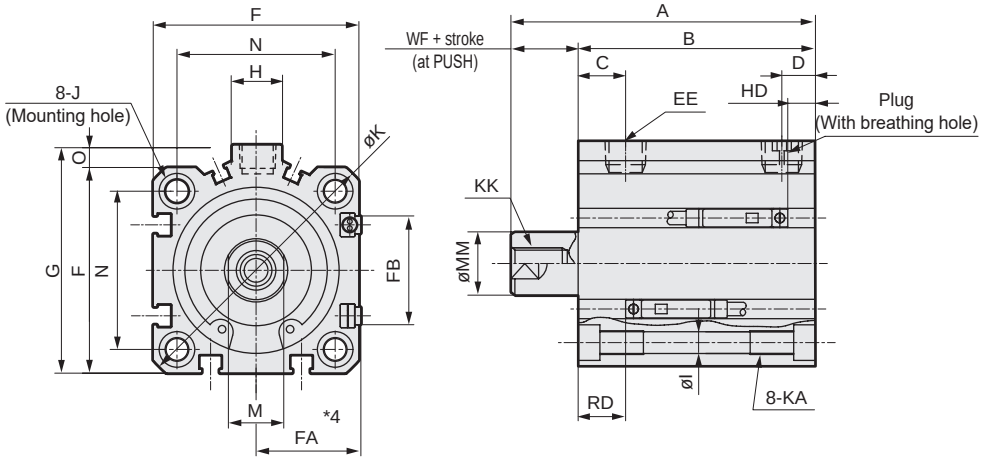

● Rod end male thread

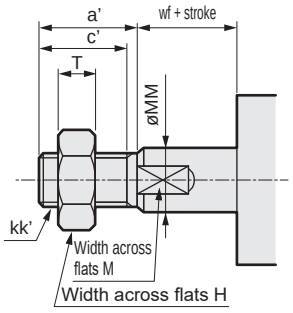

● SSD2-Y-32 to 50 (without switch)

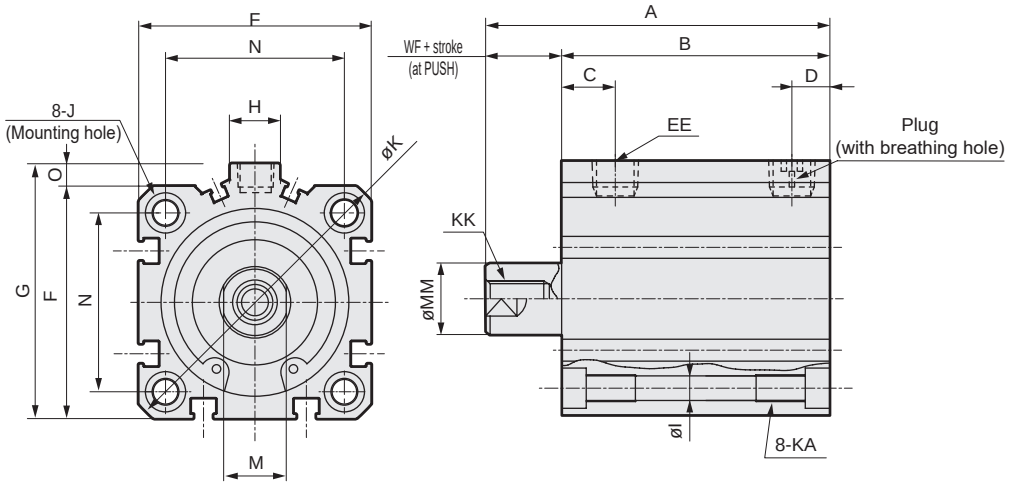

Code / Bore size (mm)		No switch A	No switch B	Common dimensions with switch A	B	C *6	D *6	EE *5	F	FA *3	FB	G	H	I	J	K	KA	KK	M	MM	N	O	WF
ø32	Stroke 5	40	28	50	38	8 (10)	8 (5.5)	Rc1/8	45	23 (26.5)	20.5	49.5	12.5	5.5	9 spot face depth 5.5	60	M6 Depth 11	M8 Depth 13	14	16	34	4.5	7
	Stroke 10	50	33	60	43																		
ø40	Stroke 5	46.5	34.5	56.5	44.5	12 (11.5)	8.5 (18)	Rc1/8	52	26.5 (30)	27.5	57	15	5.5	9 spot face depth 5.5	69	M6 Depth 11	M8 Depth 13	14	16	40	5	7
	Stroke 10	56.5	39.5	66.5	49.5																		
ø50	Stroke 10	58.5	40.5	68.5	50.5	10.5	10.5	Rc1/4	64	32.5 (36)	28.5	71	18	6.9	11 spot face depth 6.5	86	M8 Depth 13	M10 Depth 15	17	20	50	7	8
	Stroke 20	78.5	50.5	88.5	60.5																		

Switch dimensions / Bore size (mm)	Reed T0H/T0V, T5H/T5V HD *1	Reed T0H/T0V, T5H/T5V RD *1	Proximity T2H/T2V, T3H/T3V HD *1	Proximity T2H/T2V, T3H/T3V RD *1	Proximity T2WH/T2WV, T3WH/T3WV HD	Proximity T2WH/T2WV, T3WH/T3WV RD
ø32	4	9.5	4	9.5	6	11.5
ø40	7	12	7	12	8.5	13.5
ø50	7.5	12.5	7.5	12.5	9	14

*1 : HD and RD dimensions for 5 mm stroke differ from these dimensions according to the setting.
2 : Refer to page 1044 for HD, RD and protruding dimensions of the 2-color LED, off-delay, AC magnetic field proof, T1 and T8* switches.
*3 : Dimensions in ( ) of FA are for the L-shaped lead wire.
*4 : For dimensions of individual accessories, refer to pages 1046 to 1049.
*5 : The ø32 bore size with a 5 mm stroke and without a switch has a port size of M5.*6 : Dimensions in ( ) of codes C and D are when the value is for a 5 mm stroke without switch.

● Rod end male thread

Code / Bore size (mm)	a'	c'	H	kk'	M	MM	T	wf
ø32	23.5	20.5	22	M14x1.5	14	16	8	5
ø40	23.5	20.5	22	M14x1.5	14	16	8	5
ø50	28.5	26	27	M18x1.5	17	20	11	5

Dimensions with mounting bracket

CAD

● Axial foot (LB)
SSD2-Y(L)-32 to 50 -LB

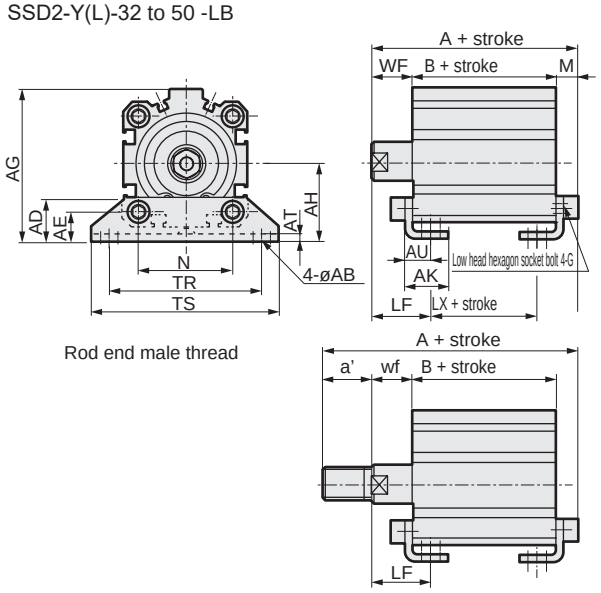

Code	Common dimensions						Female thread				
Bore size (mm)	AB	AD	AE	AG	AH	AK	AT	AU	G	N	TR
ø32	7	18.5	13	57	30	17	3.2	11.2	M6x16	34	57
ø40	7	18	13	64	33	18.2	3.2	11.2	M6x16	40	64
ø50	9	22	14	78	39	22.7	3.2	14.7	M8x20	50	79

Code										
Bore size (mm)	TS	M	WF	LF	No switch			With switch		
					A	B	LX	A	B	LX
ø32	71	7.2	17	25	47.2(57.2)	23(33)	7(17)	57.2	33	17
ø40	78	7.2	17	25	53.7(63.7)	29.5(39.5)	13.5(23.5)	63.7	39.5	23.5
ø50	95	8.2	18	29.5	56.7(66.7)	30.5(40.5)	7.5(17.5)	66.7	40.5	17.5

Code	Male thread								
Bore size (mm)	a'	wf	LF	No switch			With switch		
				A	B	LX	A	B	LX
ø32	23.5	15	23	68.7(78.7)	23(33)	7(17)	78.7	33	17
ø40	23.5	15	23	75.2(85.2)	29.5(39.5)	13.5(23.5)	85.2	39.5	23.5
ø50	28.5	15	26.5	82.2(92.2)	30.5(40.5)	7.5(17.5)	92.2	40.5	17.5

* Dimensions in ( ) are for strokes of more than 50 mm.

● Clevis bracket (CB)
SSD2-Y(L)-32 to 50 -CB

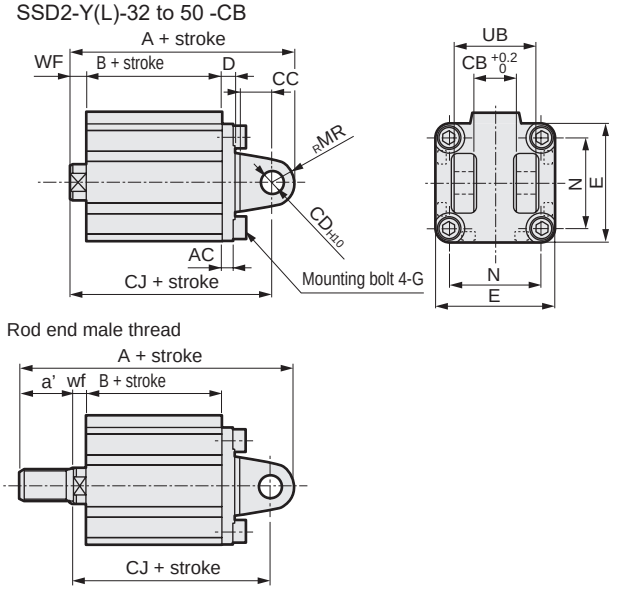

Code	Common dimensions									
Bore size (mm)	AC	CB	CC	CD	D	E	G	MR	N	UB
ø32	4.5	18.2	14	10	5	45	M6x16	10	34	36
ø40	5	18.2	14	10	6	52	M6x16	10	40	36
ø50	6	22.2	20	14	7	64	M8x20	14	50	44

Code	Female thread					
Bore size (mm)	WF	No switch			With switch		
		A	B	CJ	A	B	CJ
ø32	7	60	23	50	70	33	60
ø40	7	68.5	29.5	58.5	78.5	39.5	68.5
ø50	8	80.5	30.5	66.5	90.5	40.5	76.5

Code	Male thread							
Bore size (mm)	a'	wf	No switch			With switch		
			A	B	CJ	A	B	CJ
ø32	23.5	5	81.5	23	48	91.5	33	58
ø40	23.5	5	90	29.5	56.5	100	39.5	66.5
ø50	28.5	5	106	30.5	63.5	116	40.5	73.5

● Rod side flange (FA)
SSD2-Y(L)-32 to 50 -FA

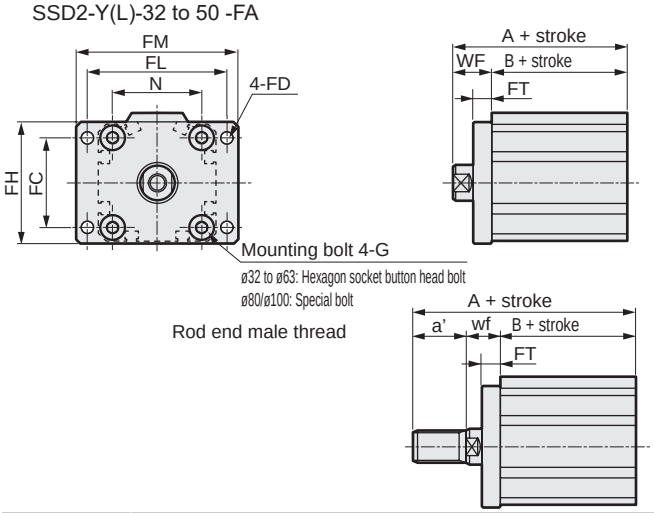

Code	Common dimensions							
Bore size (mm)	FC	FD	FH	FL	FM	FT	N	G
ø32	34	5.5	48	56	65	8	34	M6x16
ø40	40	5.5	54	62	72	8	40	M6x16
ø50	50	6.6	67	76	89	9	50	M8x20

Code	Female thread					
Bore size (mm)	WF	No switch		With switch		
		A	B	A	B	
ø32	17	40(50)	23(33)	50	33	
ø40	17	46.5(56.5)	29.5(39.5)	56.5	39.5	
ø50	18	48.5(58.5)	30.5(40.5)	58.5	40.5	

Code	Male thread					
Bore size (mm)	a'	wf	No switch		With switch	
			A	B	A	B
ø32	23.5	15	61.5(71.5)	23(33)	71.5	33
ø40	23.5	15	68(78)	29.5(39.5)	78	39.5
ø50	28.5	15	74(84)	30.5(40.5)	84	40.5

* Dimensions in ( ) are for strokes of more than 50 mm.

● Head side flange (FB)
SSD2-Y(L)-32 to 50 -FB

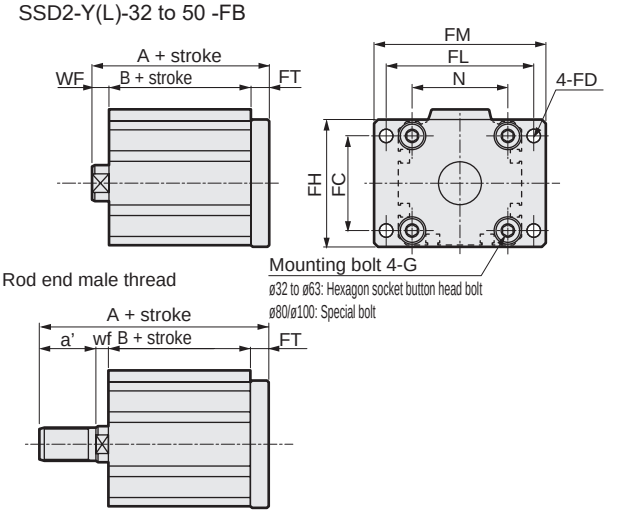

Code	Common dimensions							
Bore size (mm)	FC	FD	FH	FL	FM	FT	N	G
ø32	34	5.5	48	56	65	8	34	M6x16
ø40	40	5.5	54	62	72	8	40	M6x16
ø50	50	6.6	67	76	89	9	50	M8x20

Code	Female thread				
Bore size (mm)	WF	No switch		With switch	
		A	B	A	B
ø32	7	38	23	48	33
ø40	7	44.5	29.5	54.5	39.5
ø50	8	47.5	30.5	57.5	40.5

Code	Male thread					
Bore size (mm)	a'	wf	No switch		With switch	
			A	B	A	B
ø32	23.5	5	59.5	23	69.5	33
ø40	23.5	5	66	29.5	76	39.5
ø50	28.5	5	73	30.5	83	40.5

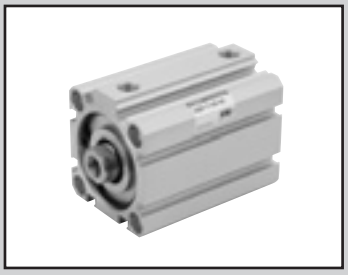

Compact cylinder double acting/heat resistant

SSD2-T1 Series

● Bore size: ø12/ø16/ø20/ø25/ø32/ø40/ø50/ø63/ø80/ø100

JIS symbol

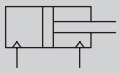

RoHS CAD

Specifications

Item	SSD2-T1									
Bore size mm	ø12	ø16	ø20	ø25	ø32	ø40	ø50	ø63	ø80	ø100
Actuation	Double acting									
Working fluid	Compressed air									
Max. working pressure MPa	1.0 (≈150 psi, 10 bar)									
Min. working pressure MPa	0.1 (≈15 psi, 1 bar)							0.05 (≈7.3 psi, 0.5 bar)		
Proof pressure MPa	1.6 (≈230 psi, 16 bar)									
Ambient temperature °C	5 (41°F) to 150 (302°F)									
Port size	M5				Rc1/8 *1		Rc1/4		Rc3/8	
Stroke tolerance mm	$^{+1.0}_{0}$									
Working piston speed mm/s	50 to 500							50 to 300		
Cushion	None									
Lubrication	Not available									
Allowable absorbed energy J	0.004	0.01	0.016	0.021	0.025	0.092	0.1	0.12	0.27	0.56

*1: The ø32 bore size with a 5 mm stroke has a port size of M5.

Stroke

Bore size (mm)	Standard stroke (mm)	Max. stroke (mm)	Min. stroke (mm)
ø12	5/10/15/20 25/30	30	1
ø16			
ø20	5/10/15/20/25 30/35/40/45/50	50	
ø25			
ø32	5/10/15/20/25/30/ 35/40/45/50/75/100	100	
ø40			
ø50	10/15/20/25 30/35/40/45/50 75/100		
ø63			
ø80			
ø100			

*: Refer to pages 763 and 765 for the min. stroke with mounting bracket LB.

Custom stroke

● SSD2-T1 Series

Item	Standard products	
	Standard stroke body with spacer	
Model No.	Refer to How to order.	
Description	A spacer is added to the standard stroke body to adjust the stroke in 1 mm increments.	
Stroke range	Bore size	Stroke range
	12/16	1 to 29
	20 to 25	1 to 49
	32 to 100	1 to 99
Example of model No.	Model No.: SSD2-T32-38 A +2 mm spacer is added to the SSD2-T32-40 standard cylinder to create 38 mm stroke. B + stroke is 63 mm.	

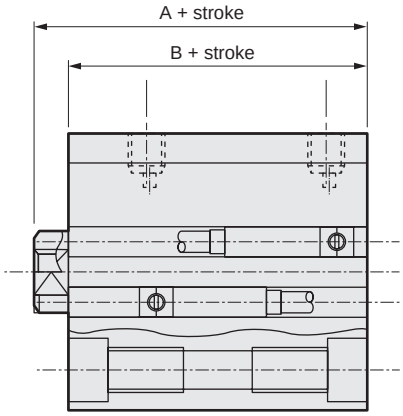

Cylinder weight table (the weight of the switches is when there are 2 cylinder switches.)

(Unit: g)

Stroke (mm) / Bore size (mm)	5	10	15	20	25	30	35	40	45	50	75	100
ø12	36	44	53	61	70	72	-	-	-	-	-	-
ø16	48	59	69	80	91	102	-	-	-	-	-	-
ø20	63	75	88	101	113	126	139	152	165	203	-	-
ø25	87	102	118	134	150	165	181	197	213	228	-	-
ø32	122	144	166	188	209	231	253	275	297	318	494	604
ø40	183	210	236	263	290	316	342	369	395	472	646	776
ø50	-	341	383	425	467	510	552	594	636	678	1025	1235
ø63	-	507	562	617	672	727	782	838	893	948	1438	1713
ø80	-	928	1015	1101	1188	1274	1361	1448	1535	1621	2401	2833
ø100	-	1433	1547	1660	1774	1888	2002	2115	2229	2343	3406	3973

How to order

SSD2-T1 - 12 ◯ - 5 - N - LB - I

Ⓐ Bore size
Ⓑ Port thread
Ⓒ Stroke
Ⓓ Option *1
Ⓔ Mounting bracket *2 *3
Ⓕ Accessory *4

Code	Description
Ⓐ Bore size (mm)	
12	ø12
16	ø16
20	ø20
25	ø25
32	ø32
40	ø40
50	ø50
63	ø63
80	ø80
100	ø100
Ⓑ Port thread	
Blank	Rc thread
NN	NPT thread (ø32 and over) (made-to-order product)
GN	G thread (ø32 and over) (made-to-order product)
Ⓒ Stroke (mm)	
	Refer to the stroke table below.
Ⓓ Option	
Blank	Rod end female thread
N	Rod end male thread
M	Piston rod material (stainless steel)
Ⓔ Mounting bracket	
Blank	Without mounting bracket
LB	Axial foot
CB	Clevis bracket (pin and snap ring included)
FA	Rod side flange
FB	Head side flange
Ⓕ Accessory (available when rod end male thread "N" is selected)	
I	Rod eye
Y	Rod clevis (pin and snap ring included)

⚠ Precautions for model No. selection

*1 : Piston rod of ø12 to ø25 is stainless steel as standard. C-snap ring is stainless steel instead of steel. The rod end male thread nut is stainless steel.
*2 : The mounting bracket is included at shipment.
*3 : The projection dimension of piston rod WF when LB or FA is selected is different from that of the standard. Refer to the dimensions on pages 761, 763, 765 and 766. The number of the specified protruding dimension will be added at the end of the model No. printed on the metal plate on the body.
*4 : "I" and "Y" cannot be selected together.
*5 : Refer to pages 750 and 751 for combinations of variations/options.

[Example of model No.]

SSD2-T1-12-5-N

Model: Compact cylinder, heat resistant
Ⓐ Bore size : ø12 mm
Ⓑ Port thread : Rc thread
Ⓒ Stroke : 5mm
Ⓓ Option : Rod end male thread

[Stroke table]

Stroke (mm)		Applicable bore size									
		ø12	ø16	ø20	ø25	ø32	ø40	ø50	ø63	ø80	ø100
Standard stroke	5	●	●	●	●	●	●				
	10	●	●	●	●	●	●	●	●	●	●
	15	●	●	●	●	●	●	●	●	●	●
	20	●	●	●	●	●	●	●	●	●	●
	25	●	●	●	●	●	●	●	●	●	●
	30	●	●	●	●	●	●	●	●	●	●
	35			●	●	●	●	●	●	●	●
	40			●	●	●	●	●	●	●	●
	45			●	●	●	●	●	●	●	●
	50			●	●	●	●	●	●	●	●
	75					●	●	●	●	●	●
	100					●	●	●	●	●	●
Min. stroke (mm)		1									
Max. stroke (mm)		30		50		100					
Custom stroke *1		In 1 mm increments									

*1: The total length when using a custom stroke is the same as that when using the next longer standard stroke.
*2: Refer to pages 763 and 765 for the min. stroke with mounting bracket LB.

How to order mounting bracket

Bore size (mm) / Mounting bracket	ø12	ø16	ø20	ø25	ø32	ø40	ø50	ø63	ø80	ø100
Foot (LB)	SSD2-LB-12	SSD2-LB-16	SSD2-LB-20	SSD2-LB-25	SSD2-LB-32	SSD2-LB-40	SSD2-LB-50	SSD2-LB-63	SSD2-LB-80	SSD2-LB-100
Flange (FA/FB)	SSD2-FA-12	SSD2-FA-16	SSD2-FA-20	SSD2-FA-25	SSD2-FA-32	SSD2-FA-40	SSD2-FA-50	SSD2-FA-63	SSD2-FA-80	SSD2-FA-100
Clevis bracket (CB)	SSD2-CB-12	SSD2-CB-16	SSD2-CB-20	SSD2-CB-25	SSD2-CB-32	SSD2-CB-40	SSD2-CB-50	SSD2-CB-63	SSD2-CB-80	SSD2-CB-100

*1: The foot mounting bracket is provided as 2 pcs./set.

Internal structure and parts list

● SSD2-T1-12 to 25

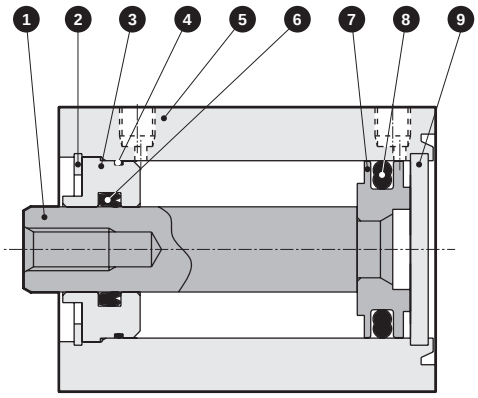

● SSD2-T1-32 to 50

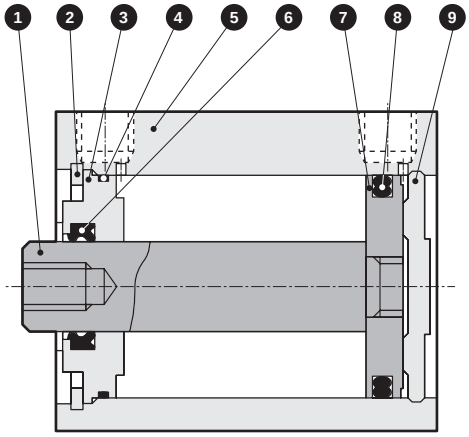

● SSD2-T1-63 to 100

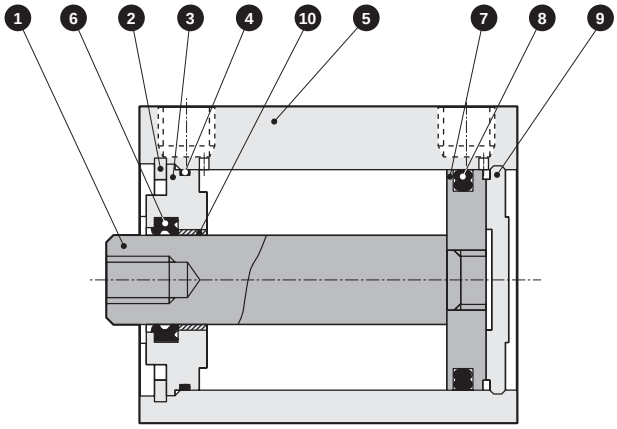

No.	Part name	Material	Remarks
1	Piston rod	ø12 to ø25: Stainless steel ø32 to ø100: Steel	ø16 to ø100: Industrial chrome plating
2	C-snap ring	Steel	Zinc phosphate
3	Rod metal	ø12 to ø50: Special aluminum ø63 to ø100: Aluminum alloy	ø12 to ø50: Alumite ø63 to ø100: Chromate
4	Rod metal gasket	Fluoro rubber	
5	Body	Aluminum alloy	Hard alumite
6	Rod packing	Fluoro rubber	

No.	Part name	Material	Remarks
7	Piston	Aluminum alloy	Chromate
8	Piston packing	Fluoro rubber	
9	Cover	ø12 to ø25: Stainless steel ø32 to ø100: Aluminum alloy	ø32 to ø100: Alumite
10	Bush	Oiles drymet	

Repair parts list

Bore size (mm)	Kit No.	Repair parts No.
ø12	SSD2-T-12K	❹❻❽
ø16	SSD2-T-16K	
ø20	SSD2-T-20K	
ø25	SSD2-T-25K	
ø32	SSD2-T-32K	
ø40	SSD2-T-40K	
ø50	SSD2-T-50K	
ø63	SSD2-T-63K	
ø80	SSD2-T-80K	
ø100	SSD2-T-100K	

Dimensions

Same as double acting/single rod. Refer to pages 760 to 766.

MEMO

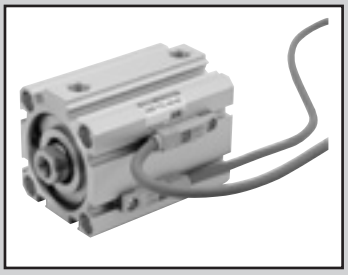

Compact cylinder double acting/with heat resistant cylinder switch

SSD2-T1L Series

● Bore size: ø16/ø20/ø25/ø32/ø40
ø50/ø63

JIS symbol

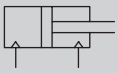

RoHS

Specifications

1 MPa ≈ 145.0 psi, 1 MPa = 10 bar

Item	SSD2-T1L						
Bore size mm	ø16	ø20	ø25	ø32	ø40	ø50	ø63
Actuation	Double acting						
Working fluid	Compressed air						
Max. working pressure MPa	1.0 (≈150 psi, 10 bar)						
Min. working pressure MPa	0.1 (≈15 psi, 1 bar)						0.05
Proof pressure MPa	1.6 (≈230 psi, 16 bar)						
Ambient temperature °C	5 (41°F) to 150 (302°F) (*1)						
Port size	M5			Rc1/8		Rc1/4	
Stroke tolerance mm	$^{+1.0}_{0}$						
Working piston speed mm/s	50 to 500						50 to 300
Cushion	None						
Lubrication (*2)	-						

*1: At an ambient temperature of 150°C, external leakage will occur gradually after approximately 500,000 uses.
*2: Periodically apply additional heat-resistant grease.

Stroke

Bore size (mm)	Standard stroke (mm)	Max. stroke (mm)	Min. stroke (mm)	
			With 1 switch	With 2 switches
ø16	10/15/20/25/30	30	10	20
ø20	15/20/25/30/ 35/40/45/50	50	15	25
ø25				20
ø32	15/20/25/30/35/ 40/45/50/70/100	100	15	
ø40				
ø50				
ø63				

Note: The custom stroke is available in 1 mm increments. (Less than 7 mm is not available.) However, the total length is the same as that of the next longer standard stroke.

Custom stroke

● SSD2-T1L Series

Item	Standard products	
	Standard stroke body with spacer	
Model No.	Refer to How to order.	
Description	A spacer is added to the standard stroke body to adjust the stroke in 1 mm increments.	
Stroke range	Bore size	Stroke range
	12/16	1 to 29
	20 to 25	1 to 49
	32 to 63	1 to 99
Example of model No.	Model No.: SSD2-T1L-32-38 A +2 mm spacer is added to the SSD2-T1L-32-40 standard cylinder to create 38 mm stroke. B + stroke is 73 mm.	

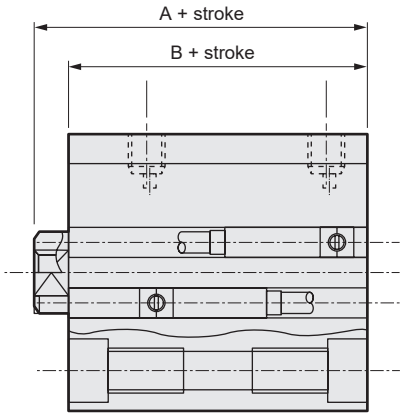

Cylinder switch specifications

Item	2-wire reed ET0H, ET0V	
Applications	For relay, programmable controller	
Load voltage	12/24 VDC	110 VAC
Load current	5 to 50 mA	7 to 20 mA
Internal voltage drop	3.0 V or less	
Leakage current	0mA	
Indicator	LED (Lit when ON) (Note)	
Lead wire	Heat-resistant fluorine-insulated sheathed wire 1 m (0.5SQ (100/0.08) annealed copper wire x 2C)	
Insulation resistance	100 MΩ and over with 500 VDC megger	
Withstand voltage	No failure after 1 minute of 1,000 VAC application.	
Max. shock resistance	294 m/s^2	
Ambient temperature	-10 to 150°C	
Degree of protection	IEC standards IP67, JIS C0920 (water-tight)	
Weight g	40	

Note: Indicator uses LED. Visibility will gradually decrease with continuous use under high temperatures.
As the LED lamp circuit is separated from the switch output circuit, the switch output works normally even if the LED lamp turns OFF.

Cylinder weight table (the weight of the switches is when there are 2 cylinder switches.)

(Unit: g)

Stroke (mm)	5		10		15		20		25		30		35		40		45		50		75		100	
Bore size (mm)	No switch	Switch	No switch	Switch	No switch	Switch	No switch	Switch	No switch	Switch	No switch	Switch	No switch	Switch	No switch	Switch	No switch	Switch	No switch	Switch	No switch	Switch	No switch	Switch
ø16	71	127	82	127	92	137	103	148	114	159	125	170	-	-	-	-	-	-	-	-	-	-	-	-
ø20	63	118	75	150	88	163	101	176	113	188	126	201	139	214	152	227	165	240	203	278	-	-	-	-
ø25	87	178	102	193	118	209	134	225	150	241	165	256	181	272	197	288	213	304	228	319	-	-	-	-
ø32	122	236	144	258	166	280	188	302	209	323	231	345	253	367	275	389	297	411	318	432	494	542	604	652
ø40	183	326	210	353	236	379	263	406	290	433	316	459	342	485	369	512	395	538	472	565	646	695	776	825
ø50	-	-	341	535	383	577	425	619	467	661	510	704	552	746	594	788	636	830	678	872	1025	1082	1235	1292
ø63	-	-	507	786	562	841	617	896	672	951	727	1006	782	1061	838	1117	893	1172	948	1227	1438	1502	1713	1777

Theoretical thrust table

(Unit: N)

Bore size (mm)	Operating direction	Working pressure MPa 0.05	0.1	0.15	0.2	0.3	0.4	0.5	0.6	0.7	0.8	0.9	1.0
ø16	Push	-	20.1	30.2	40.2	60.3	80.4	1.01×10^2	1.21×10^2	1.41×10^2	1.61×10^2	1.81×10^2	2.01×10^2
	Pull	-	15.1	22.6	30.2	45.2	60.3	75.4	90.5	1.06×10^2	1.21×10^2	1.36×10^2	1.51×10^2
ø20	Push	-	31.4	47.1	62.8	94.2	1.26×10^2	1.57×10^2	1.88×10^2	2.20×10^2	2.51×10^2	2.83×10^2	3.14×10^2
	Pull	-	23.6	35.3	47.1	70.7	94.2	1.18×10^2	1.41×10^2	1.65×10^2	1.88×10^2	2.12×10^2	2.36×10^2
ø25	Push	-	49.1	73.6	98.2	1.47×10^2	1.96×10^2	2.45×10^2	2.95×10^2	3.44×10^2	3.93×10^2	4.42×10^2	4.91×10^2
	Pull	-	37.8	56.7	75.6	1.13×10^2	1.51×10^2	1.89×10^2	2.27×10^2	2.64×10^2	3.02×10^2	3.40×10^2	3.78×10^2
ø32	Push	-	80.4	1.21×10^2	1.61×10^2	2.41×10^2	3.22×10^2	4.02×10^2	4.83×10^2	5.63×10^2	6.43×10^2	7.24×10^2	8.04×10^2
	Pull	-	60.3	90.5	1.21×10^2	1.81×10^2	2.41×10^2	3.02×10^2	3.62×10^2	4.22×10^2	4.83×10^2	5.43×10^2	6.03×10^2
ø40	Push	-	1.26×10^2	1.88×10^2	2.51×10^2	3.77×10^2	5.03×10^2	6.28×10^2	7.54×10^2	8.80×10^2	1.01×10^3	1.13×10^3	1.26×10^3
	Pull	-	1.06×10^2	1.58×10^2	2.11×10^2	3.17×10^2	4.22×10^2	5.28×10^2	6.33×10^2	7.39×10^2	8.44×10^2	9.50×10^2	1.06×10^3
ø50	Push	-	1.96×10^2	2.95×10^2	3.93×10^2	5.89×10^2	7.85×10^2	9.82×10^2	1.18×10^3	1.37×10^3	1.57×10^3	1.77×10^3	1.96×10^3
	Pull	-	1.65×10^2	2.47×10^2	3.30×10^2	4.95×10^2	6.60×10^2	8.25×10^2	9.90×10^2	1.15×10^3	1.32×10^3	1.48×10^3	1.65×10^3
ø63	Push	1.56×10^2	3.12×10^2	4.68×10^2	6.23×10^2	9.35×10^2	1.25×10^3	1.56×10^3	1.87×10^3	2.18×10^3	2.49×10^3	2.81×10^3	3.12×10^3
	Pull	1.40×10^2	2.80×10^2	4.20×10^2	5.61×10^2	8.41×10^2	1.12×10^3	1.40×10^3	1.68×10^3	1.96×10^3	2.24×10^3	2.52×10^3	2.80×10^3

How to order

SSD2-T1L - 16 ◯ - 10 - ET0H - D - N - LB - I

Double acting/heat resistant
with compact heat resistant switch

Ⓐ Bore size

Ⓑ Port thread

Ⓒ Stroke

Ⓓ Switch model No.

Ⓔ Switch quantity

Ⓕ Option *1

Ⓖ Mounting bracket *2 *3

Ⓗ Accessory *4

Code	Description
Ⓐ Bore size (mm)	
16	ø16
20	ø20
25	ø25
32	ø32
40	ø40
50	ø50
63	ø63
Ⓑ Port thread	
Blank	Rc thread
NN	NPT thread (ø32 and over) (made-to-order product)
GN	G thread (ø32 and over) (made-to-order product)
Ⓒ Stroke (mm)	
Refer to the stroke table on the following page.	

Ⓓ Switch model No.				
ET0H	Reed	AC/DC	2-wire	Axial lead wire
ET0V				L-shaped lead wire

Code	Description
Ⓔ Switch quantity	
R	1 on rod side
H	1 on head side
D	2
Ⓕ Option	
Blank	Rod end female thread
N	Rod end male thread
M	Piston rod material (stainless steel)
Ⓖ Mounting bracket	
Blank	Without mounting bracket
LB	Axial foot
CB	Clevis bracket (pin and snap ring included)
FA	Rod side flange
FB	Head side flange
Ⓗ Accessory (available when rod end male thread "N" is selected)	
I	Rod eye
Y	Rod clevis (pin and snap ring included)

⚠ Precautions for model No. selection

*1 : Piston rod of ø12 to ø25 is stainless steel as standard. C-snap ring is stainless steel instead of steel. The rod end male thread nut is stainless steel.
*2 : The mounting bracket is included at shipment.
*3 : The projection dimension of piston rod WF when LB or FA is selected is different from that of the standard. Refer to the dimensions on pages 830 and 831. The number of the specified protruding dimension will be added at the end of the model No. printed on the metal plate on the body.
*4 : "I" and "Y" cannot be selected together.
*5 : Refer to pages 750 and 751 for combinations of variations/options.
*6 : Switches are shipped with the product. Contact CKD if assembling before shipment is necessary.

[Example of model No.]

SSD2-T1L-16-10-ET0H-D-N

Model: Compact cylinder
with heat resistant cylinder switch

Ⓐ Bore size : ø16 mm
Ⓑ Port thread : Rc thread
Ⓒ Stroke : 10mm
Ⓓ Switch model No. : Reed switch ET0H, lead wire length 1 m
Ⓔ Switch quantity : 2 pcs. included
Ⓕ Option : Rod end male thread

[Stroke table]

Stroke (mm)		Applicable bore size						
		ø16	ø20	ø25	ø32	ø40	ø50	ø63
Standard stroke	10	●						
	15	●	●	●	●	●	●	●
	20	●	●	●	●	●	●	●
	25	●	●	●	●	●	●	●
	30	●	●	●	●	●	●	●
	35		●	●	●	●	●	●
	40		●	●	●	●	●	●
	45		●	●	●	●	●	●
	50		●	●	●	●	●	●
	70				●	●	●	●
	100				●	●	●	●
Min. stroke (mm)		10(20)	15(25)	15(20)	15(20)			
Max. stroke (mm)		30	50		100			
Custom stroke *2		In 1 mm increments						

*1 : The value in ( ) is for types with two switches.
Refer to page 824 for the min. stroke with switch.
*2 : The total length is the same as that of the next longer standard stroke.

How to order switch

SW - ET0H

Switch model No.
(Item Ⓓ on page 826)

How to order mounting bracket

Bore size (mm) / Mounting bracket	ø16	ø20	ø25	ø32	ø40	ø50	ø63
Foot (LB)	SSD2-LB-16	SSD2-LB-20	SSD2-LB-25	SSD2-LB-32	SSD2-LB-40	SSD2-LB-50	SSD2-LB-63
Flange (FA/FB)	SSD2-FA-16	SSD2-FA-20	SSD2-FA-25	SSD2-FA-32	SSD2-FA-40	SSD2-FA-50	SSD2-FA-63
Clevis bracket (CB)	SSD2-CB-16	SSD2-CB-20	SSD2-CB-25	SSD2-CB-32	SSD2-CB-40	SSD2-CB-50	SSD2-CB-63

*1: The foot mounting bracket is provided as 2 pcs./set.

Internal structure and parts list

● SSD2-T1L-16 to 25

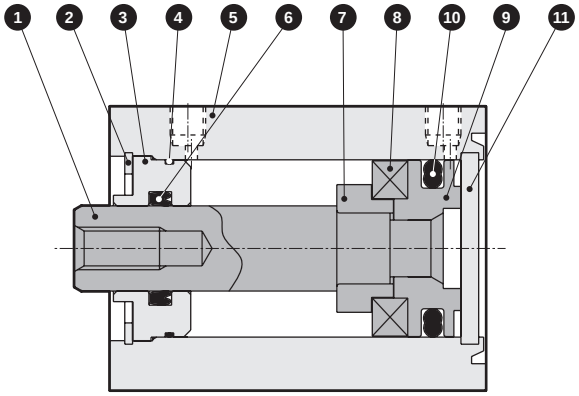

● SSD2-T1L-32 to 50

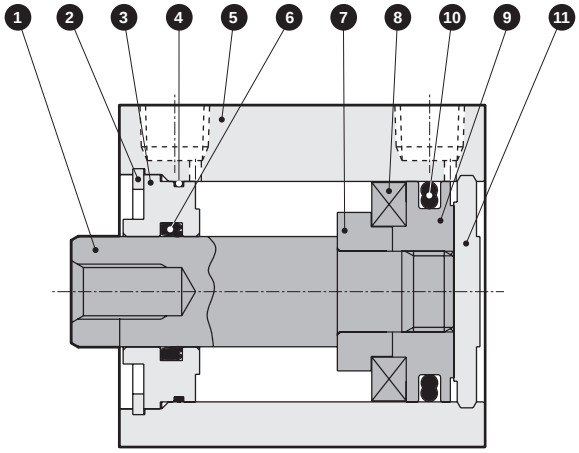

● SSD2-T1L-63

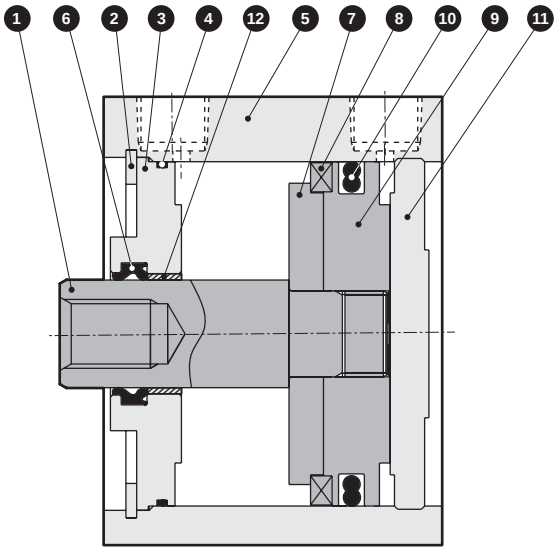

No.	Part name	Material	Remarks
1	Piston rod	ø16 to ø25: Stainless steel ø32 to ø63: Steel	Industrial chrome plating
2	C-snap ring	Steel	Zinc phosphate
3	Rod metal	ø16 to ø50: Special aluminum ø63: Aluminum alloy	ø16 to ø50: Alumite ø63: Chromate
4	Rod metal gasket	Fluoro rubber	
5	Body	Aluminum alloy	Hard alumite
6	Rod packing	Fluoro rubber	

No.	Part name	Material	Remarks
7	Spacer	Aluminum alloy	ø32: Chromate
8	Magnet	Special alloy	
9	Piston	ø16 to ø32: Aluminum alloy ø40 to ø63: Stainless steel	ø32: Chromate
10	Piston packing	Fluoro rubber	
11	Cover	ø16 to ø25: Stainless steel ø32 to ø63: Aluminum alloy	ø32 to ø100: Alumite
12	Bush	Oiles drymet	

Fluorine grease is used.

Repair parts list

Bore size (mm)	Kit No.	Repair parts No.
ø16	SSD2-T-16K	4 6 10
ø20	SSD2-T-20K	
ø25	SSD2-T-25K	
ø32	SSD2-T-32K	
ø40	SSD2-T-40K	
ø50	SSD2-T-50K	
ø63	SSD2-T-63K	

Dimensions

● SSD2-T1L-16 to 63

● Rod end male thread

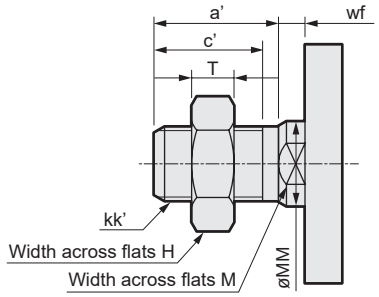

· ø16

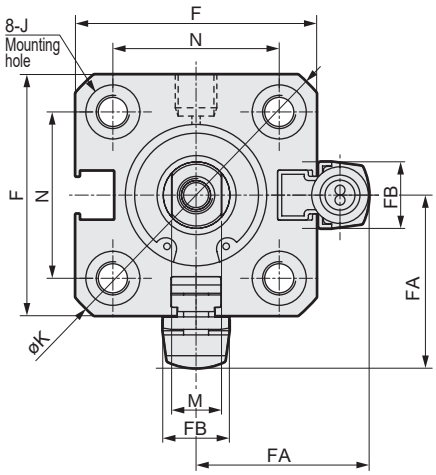

· ø20 to ø63

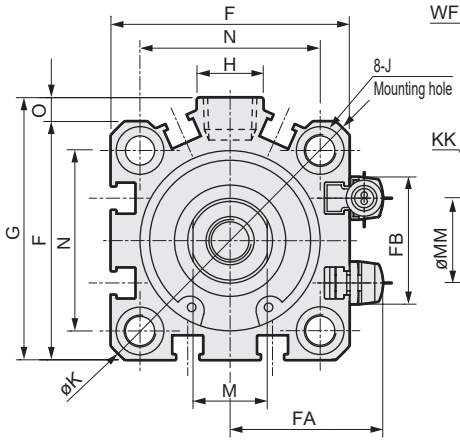

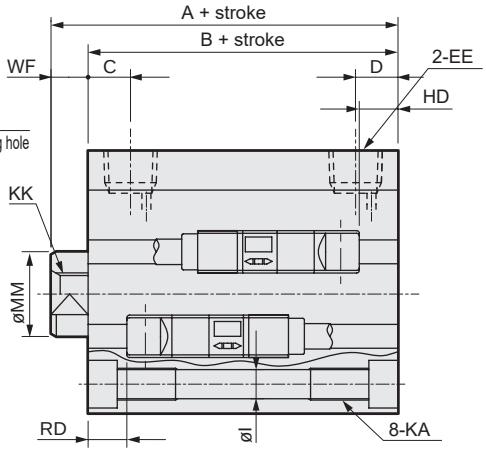

Code / Bore size (mm)	Common dimensions with switch																			
	A *1	B *1	C	D	EE	F	FA	FB	G	H	I	J	K	KA	KK	M	MM	N	O	WF
ø16	35.5	32	5.5	5.5	M5	29	21	8	-	-	3.5	6.5 spot face depth 3.5	38	M4 depth 7	M4 depth 8	6	8	20	-	3.5
ø20	34	29.5	8	5.5	M5	36	24.5	16	-	-	5.5	9 spot face depth 5.5	47	M6 depth 11	M5 depth 7	8	10	25.5	-	4.5
ø25	37.5	32.5	11	6	M5	40	26.5	17	-	-	5.5	9 spot face depth 5.5	51	M6 depth 11	M6 depth 12	10	12	28	-	5
ø32	40	33	8	8	Rc1/8	45	29	24	49.5	12.5	5.5	9 spot face depth 5.5	60	M6 depth 11	M8 depth 13	14	16	34	4.5	7
ø40	46.5	39.5	12	8.5	Rc1/8	52	32.5	31	57	15	5.5	9 spot face depth 5.5	69	M6 depth 11	M8 depth 13	14	16	40	5	7
ø50	48.5	40.5	10.5	10.5	Rc1/4	64	38.5	32	71	18	6.9	11 spot face depth 6.5	86	M8 depth 13	M10 depth 15	17	20	50	7	8
ø63	54	46	13	11	Rc1/4	77	45	32	84	23	8.7	14 spot face depth 9	103	M10 depth 25	M10 depth 15	17	20	60	7	8

Switch dimensions / Bore size (mm)	Reed ET0H/ET0V	
	HD	RD
ø16	0.5	0
ø20	0	0
ø25	0	0.5
ø32	0.5	2
ø40	1.5	7
ø50	1.5	6
ø63	5.5	5.5

*1 : To calculate A+ stroke or B+ stroke when using custom stroke, apply the next longer standard stroke (instead of the custom stroke) to the stroke value. (Example) If the custom stroke is 7 mm, apply the standard stroke of 10 mm.

*2 : For dimensions of individual accessories, refer to pages 1046 to 1049.

● Rod end male thread

Code / Bore size (mm)	a'	c'	H	kk'	M	MM	T	wf
ø16	12	10	10	M6	6	8	3.6	3.5
ø20	14	12	13	M8	8	10	5	4.5
ø25	17.5	15	17	M10x1.25	10	12	6	5
ø32	23.5	20.5	22	M14x1.5	14	16	8	5
ø40	23.5	20.5	22	M14x1.5	14	16	8	5
ø50	28.5	26	27	M18x1.5	17	20	11	5
ø63	28.5	26	27	M18x1.5	17	20	11	5

Dimensions with mounting bracket

● Axial foot (LB) with switch
SSD2-T1L-16 to 25 -LB

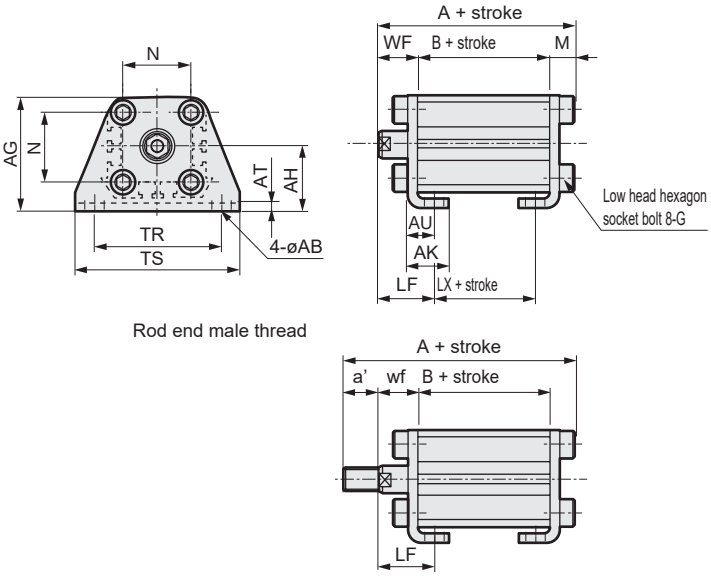

● Clevis bracket (CB) with switch
SSD2-T1L-16 to 25 -CB

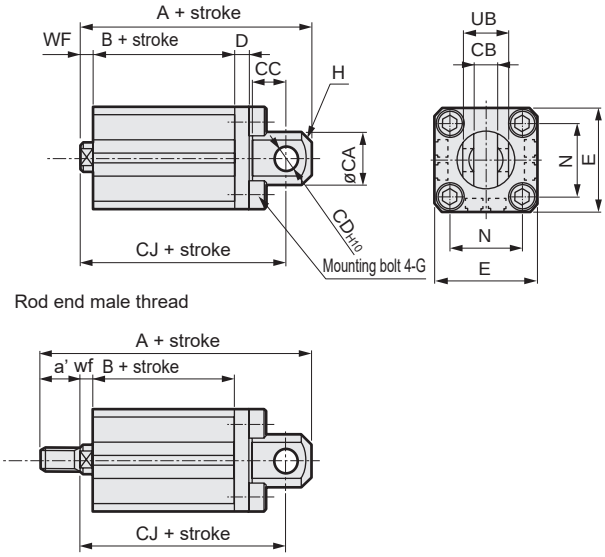

Code	Common dimensions				Female thread						
Bore size (mm)	AB	AG	AH	AK	AT	AU	G	N	TR	TS	M
ø16	5	33.5	19	13	2	8	M4x10	20	38	48	4.8
ø20	7	42	24	15	3.2	9.2	M6x16	25.5	48	62	7.2
ø25	7	46	26	16.5	3.2	10.7	M6x16	28	52	66	7.2

Code						Male thread					
Bore size (mm)	WF	LF	A	B	LX	a'	wf	LF	A	B	LX
ø16	13.5	19.5	50.3	32	20	12	13.5	19.5	62.3	32	20
ø20	14.5	20.5	51.2	29.5	17.5	14	14.5	20.5	65.2	29.5	17.5
ø25	15	22.5	54.7	32.5	17.5	17.5	15	22.5	72.2	32.5	17.5

Code	Common dimensions									
Bore size (mm)	CA	CB	CC	CD	D	E	G	H	N	UB
ø16	15	$6.6^{+0.3}_{0}$	8	5	5	29	M4x12	C2	20	$12^{-0.1}_{-0.4}$
ø20	20	$8.2^{+0.2}_{0}$	12	8	5	36	M6x16	C4	25.5	$16^{-0.1}_{-0.3}$
ø25	24	$10.2^{+0.2}_{0}$	14	10	5	40	M6x16	C5	28	$20^{-0.1}_{-0.3}$

Code	Female thread				Male thread				
Bore size (mm)	WF	A	B	CJ	a'	wf	A	B	CJ
ø16	3.5	56.5	32	50.5	12	3.5	68.5	32	50.5
ø20	4.5	61	29.5	52	14	4.5	75	29.5	52
ø25	5	67.5	32.5	57.5	17.5	5	85	32.5	57.5

● Rod side flange (FA) with switch
SSD2-T1L-16 to 25 -FA

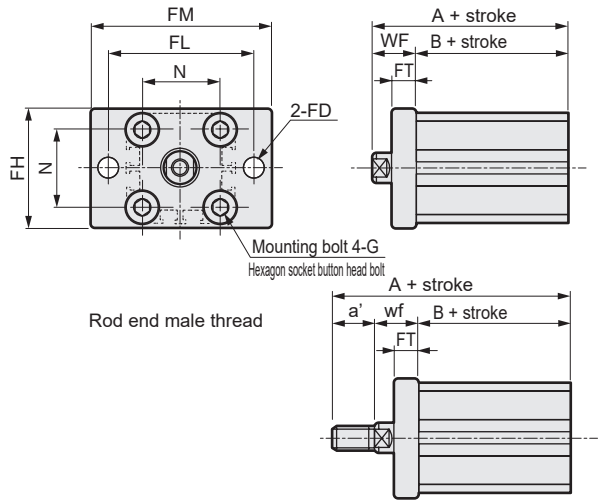

● Head side flange (FB) with switch
SSD2-T1L-16 to 25 -FB

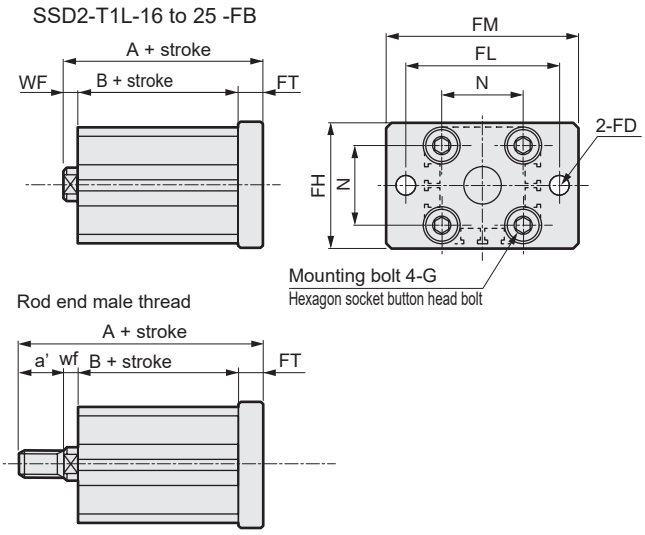

Code	Common dimensions						
Bore size (mm)	FD	FH	FL	FM	FT	N	G
ø16	4.5	30	45	55	5.5	20	M4x12
ø20	6.6	39	48	60	8	25.5	M6x16
ø25	6.6	42	52	64	8	28	M6x16

Code	Female thread			Male thread			
Bore size (mm)	WF	A	B	a'	wf	A	B
ø16	13.5	45.5	32	12	13.5	57.5	32
ø20	14.5	44	29.5	14	14.5	58	29.5
ø25	15	47.5	32.5	17.5	15	65	32.5

Code	Common dimensions						
Bore size (mm)	FD	FH	FL	FM	FT	N	G
ø16	4.5	30	45	55	5.5	20	M4x12
ø20	6.6	39	48	60	8	25.5	M6x16
ø25	6.6	42	52	64	8	28	M6x16

Code	Female thread			Male thread			
Bore size (mm)	WF	A	B	a'	wf	A	B
ø16	3.5	41	32	12	3.5	53	32
ø20	4.5	42	29.5	14	4.5	56	29.5
ø25	5	45.5	32.5	17.5	5	63	32.5

Dimensions with mounting bracket

● Axial foot (LB)
SSD2-T1L -32 to 63 -LB

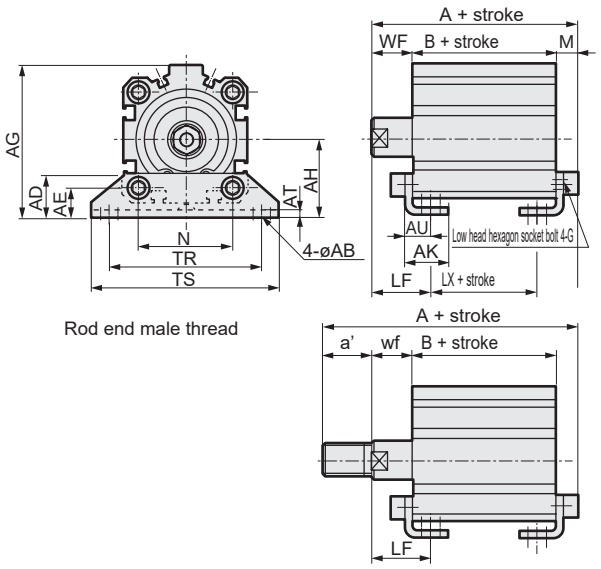

Code	Common dimensions						Female thread					
Bore size (mm)	AB	AD	AE	AG	AH	AK	AT	AU	G	N	TR	TS
ø32	7	18.5	13	57	30	17	3.2	11.2	M6x16	34	57	71
ø40	7	18	13	64	33	18.2	3.2	11.2	M6x16	40	64	78
ø50	9	22	14	78	39	22.7	3.2	14.7	M8x20	50	79	95
ø63	11	26	16	91.5	46	25.2	3.2	16.2	M10x25	60	95	113

Code							Male thread					
Bore size (mm)	M	WF	LF	A	B	LX	a'	wf	LF	A	B	LX
ø32	7.2	17	25	57.2	33	17	23.5	15	23	78.7	33	17
ø40	7.2	17	25	63.7	39.5	23.5	23.5	15	23	85.2	39.5	23.5
ø50	8.2	18	29.5	66.7	40.5	17.5	28.5	15	26.5	92.2	40.5	17.5
ø63	9.2	18	31	73.2	46	20	28.5	15	28	98.7	46	20

* Dimensions in ( ) are for strokes of more than 50 mm.

● Clevis bracket (CB)
SSD2-T1L -32 to 63 -CB

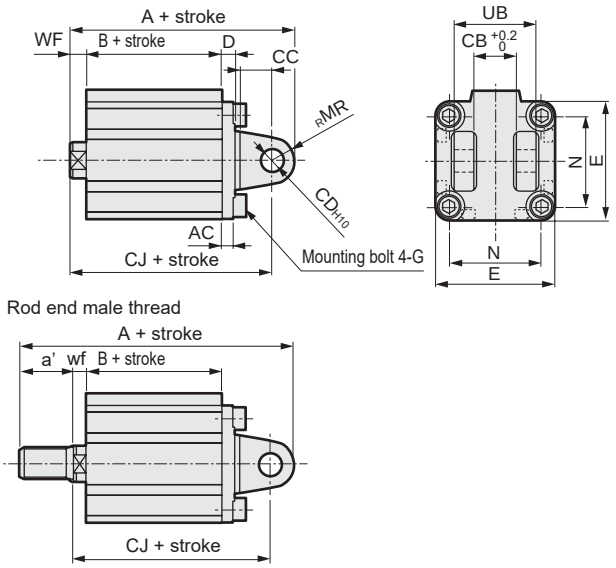

Code	Common dimensions									
Bore size (mm)	AC	CB	CC	CD	D	E	G	MR	N	UB
ø32	4.5	18.2	14	10	5	45	M6x16	10	34	36
ø40	5	18.2	14	10	6	52	M6x16	10	40	36
ø50	6	22.2	20	14	7	64	M8x20	14	50	44
ø63	7	22.2	20	14	8	77	M10x25	14	60	44

Code	Female thread				Male thread				
Bore size (mm)	WF	A	B	CJ	a'	wf	A	B	CJ
ø32	7	70	33	60	23.5	5	91.5	33	58
ø40	7	78.5	39.5	68.5	23.5	5	100	39.5	66.5
ø50	8	90.5	40.5	76.5	28.5	5	116	40.5	73.5
ø63	8	98	46	84	28.5	5	123.5	46	81

● Rod side flange (FA)
SSD2-T1L -32 to 50 -FA

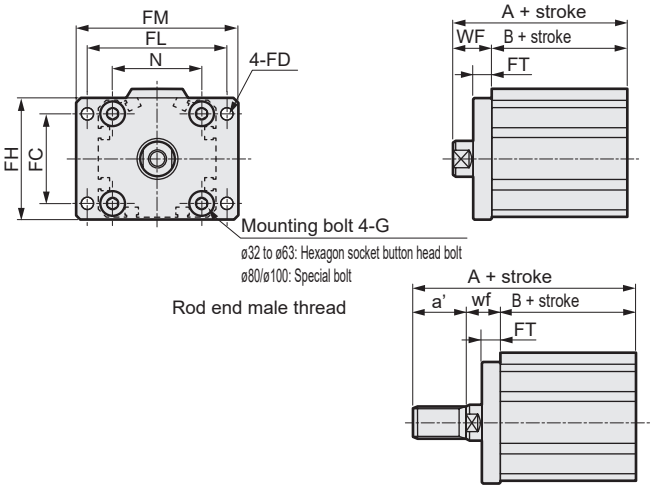

Code	Common dimensions							
Bore size (mm)	FC	FD	FH	FL	FM	FT	N	G
ø32	34	5.5	48	56	65	8	34	M6x16
ø40	40	5.5	54	62	72	8	40	M6x16
ø50	50	6.6	67	76	89	9	50	M8x20
ø63	60	9	80	92	108	9	60	M10x25

Code	Female thread			Male thread			
Bore size (mm)	WF	A	B	a'	wf	A	B
ø32	17	50	33	23.5	15	71.5	33
ø40	17	56.5	39.5	23.5	15	78	39.5
ø50	18	58.5	40.5	28.5	15	84	40.5
ø63	18	64	46	28.5	15	89.5	46

* Dimensions in ( ) are for strokes of more than 50 mm.

● Head side flange (FB)
SSD2-T1L -32 to 50 -FB

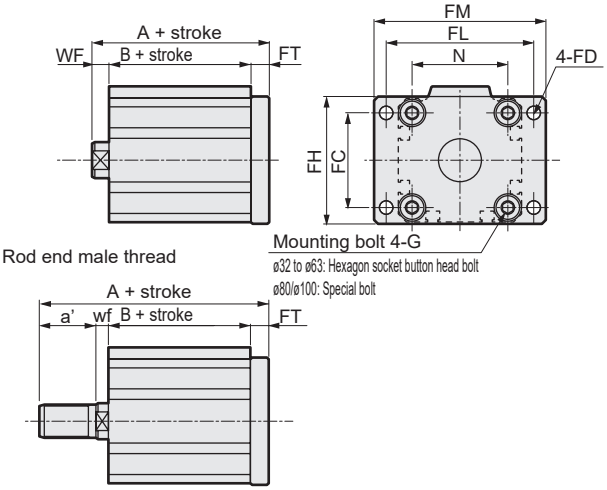

Code	Common dimensions							
Bore size (mm)	FC	FD	FH	FL	FM	FT	N	G
ø32	34	5.5	48	56	65	8	34	M6x16
ø40	40	5.5	54	62	72	8	40	M6x16
ø50	50	6.6	67	76	89	9	50	M8x20
ø63	60	9	80	92	108	9	60	M10x25

Code	Female thread			Male thread			
Bore size (mm)	WF	A	B	a'	wf	A	B
ø32	7	48	33	23.5	5	69.5	33
ø40	7	54.5	39.5	23.5	5	76	39.5
ø50	8	57.5	40.5	28.5	5	83	40.5
ø63	8	63	46	28.5	5	88.5	46

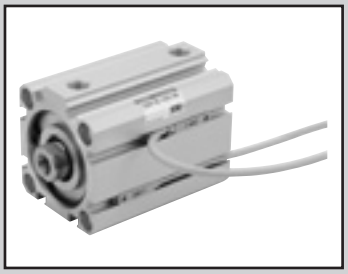

Compact cylinder high load/rubber-air cushioned

SSD2-K-*C Series

● Bore size: ø20/ø25/ø32/ø40/ø50/ø63/ø80/ø100

JIS symbol 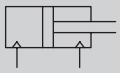

RoHS CAD

Specifications

Item	SSD-K-*C SSD-KL-*C (with switch)							
Bore size mm	ø20	ø25	ø32	ø40	ø50	ø63	ø80	ø100
Actuation	Double acting							
Working fluid	Compressed air							
Max. working pressure MPa	1.0 (≈150 psi, 10 bar)							
Min. working pressure MPa	0.25 (≈36 psi, 2.5 bar)		0.2 (≈29 psi, 2 bar)					
Proof pressure MPa	1.6 (≈230 psi, 16 bar)							
Ambient temperature °C	-10 (14°F) to 60 (140°F) (no freezing)							
Port size	Rc1/8				Rc1/4		Rc3/8	
Stroke tolerance mm	$^{+2.0}_{0}$							
Working piston speed mm/s	50 to 500					50 to 300		
Cushion	Rubber-air cushion							
Lubrication	Not required (use turbine oil ISO VG32 if necessary for lubrication)							
Allowable absorbed energy J	0.16	0.16	0.40	0.63	0.98	1.56	2.51	3.92

Stroke

Bore size (mm)	Standard stroke (mm)	Max. stroke (mm)	Min. stroke (mm)
ø20	5/10/15/20/25/30/35/40/45/50	50	5
ø25			
ø32	5/10/15/20/25/30/35/40/45/50/75/100	100	
ø40			
ø50	10/15/20/25/30/35/40/45/50/75/100		
ø63			10
ø80			
ø100			

*1 : The custom stroke is available in 1 mm increments. However, the total length is the same as that of the next longer standard stroke.

*2: Refer to page 789 for the min. stroke with mounting bracket LB.

Min. stroke with switch (2 switches)

Bore size (mm)	T0H/V / T5H/V	T2H/V / T3H/V
ø20	5	5
ø25		
ø32		
ø40		
ø50		
ø63		10
ø80		
ø100		

1: Less than 10 mm with the 2-color LED, off-delay, AC magnetic field proof, T1 or T8* switch is not available.

Custom stroke

● SSD2-K-*C Series

Item	Standard products Standard stroke body with spacer	
Model No.	Refer to How to order.	
Description	A spacer is added to the standard stroke body to adjust the stroke in 1 mm increments.	
Stroke range	Bore size	Stroke range
	20 to 25	1 to 49
	32 to 100	1 to 99
Example of model No.	Model No.: SSD2-K-32C-38 A +2 mm spacer is added to the SSD2-K-32C-40 standard cylinder to create 38 mm stroke. B + stroke is 73 mm.	

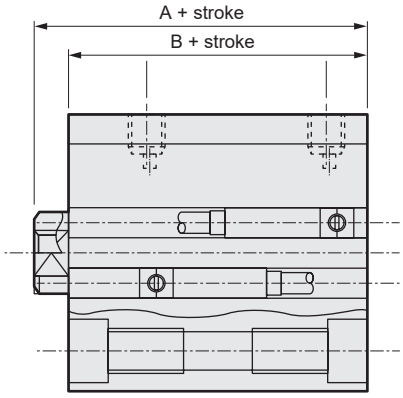

Rubber-air cushion mechanism

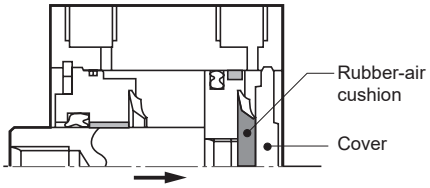

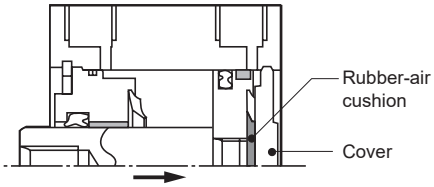

When pulled

An airtight space is created in the ■ area when the piston operates and the rubber-air cushion and cover make contact. Air in the airtight area is further compressed, absorbing energy as the piston operates.
At the end of the stroke, energy generated by compression distortion of the rubber cushion is also added.

Data of the reduction of collision noise level (an example case)

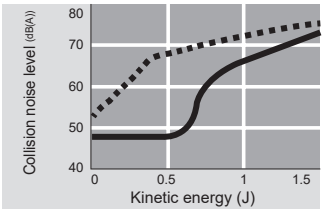

Data of the reduction of collision acceleration level (an example case)

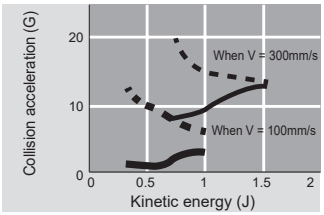

Cylinder with rubber cushion
Cylinder with rubber-air cushion

Switch specifications (F-switch)

● 1-color/2-color LED

Item	2-wire proximity	3-wire proximity	2-wire proximity		3-wire proximity		
	F2S	F3S	F2H/F2V	F2YH/F2YV	F3H/F3V	F3PH/F3PV (made to order)	F3YH/F3YV
Applications	Dedicated for programmable controller	For programmable controller, relay	Dedicated for programmable controller		For programmable controller, relay		
Output method	-	NPN output	-		NPN output	PNP output	NPN output
Power supply voltage	-	10 to 28 VDC	-		10 to 28 VDC	4.5 to 28 VDC	10 to 28 VDC
Load voltage	10 to 30 VDC	30 VDC or less	10 to 30 VDC	24 VDC ±10%	30 VDC or less		
Load current	5 to 20 mA	50 mA or less	5 to 20 mA		50 mA or less		
Indicator	LED (Lit when ON)		Yellow LED (Lit when ON)	Red/green LED (Lit when ON)	Yellow LED (Lit when ON)		Red/green LED (Lit when ON)
Leakage current	1 mA or less	10 μA or less	1 mA or less		10 μA or less		
Weight g	1 m:10 3 m:29						

Switch specifications (T-switch)

● 1-color/2-color LED/for AC magnetic field proof

Item	2-wire proximity	2-wire proximity			3-wire proximity				2-wire reed							2-wire proximity
	T1H/T1V	T2H/T2V/T2JH/T2JV	T2YH/T2YV	T2WH/T2WV	T3H/T3V	T3PH/T3PV	T3YH/T3YV	T3WH/T3WV	T0H/T0V		T5H/T5V		T8H/T8V			T2YD(*4) T2YDT
Applications	For programmable controller, relay, compact solenoid valve	Dedicated for programmable controller			For programmable controller, relay				For programmable controller, relay		For programmable controller, relay, IC circuit (no indicator lamp), serial connection		For programmable controller, relay			For programmable controller
Output method	-				NPN output	PNP output	NPN output	NPN output	-							
Pwr. supp. V.	-				10 to 28 VDC				-							
Load voltage	85 to 265 VAC	10 to 30 VDC		24 VDC ±10%	30 VDC or less				12/24 VDC	100/110 VAC	5/12/24 VDC	100/110 VAC	12/24 VDC	110 VAC	220 VAC	24 VDC ±10%
Load current	5 to 100 mA	5 to 20 mA (*3)			100 mA or less		50 mA or less		5 to 50 mA	7 to 20 mA	50 mA or less	20 mA or less	5 to 50 mA	7 to 20 mA	7 to 10 mA	5 to 20 mA
Indicator	LED (Lit when ON)	LED (Lit when ON)	Red/green LED (Lit when ON)	Red/green LED (Lit when ON)	LED (Lit when ON)	Yellow LED (Lit when ON)	Red/green LED (Lit when ON)	Red/green LED (Lit when ON)	LED (Lit when ON)		No indicator lamp		LED (Lit when ON)			Red/green LED (Lit when ON)
Leakage current	≤ 1 mA at 100 VAC, ≤ 2 mA at 200 VAC	1 mA or less			10 μA or less				0 mA							1 mA or less
Weight g	1 m:33 3 m:87 5 m:142	1 m:18 3 m:49 5 m:80	1 m:33 3 m:87 5 m:142	1 m:18 3 m:49 5 m:80	1 m:18 3 m:49 5 m:80		1 m:33 3 m:87 5 m:142	1 m:18 3 m:49 5 m:80	1 m:18 3 m:49 5 m:80				1 m:33 3 m:87 5 m:142			1 m:61 3 m:166 5 m:272

*1 : Refer to Ending Page 1 for detailed switch specifications and dimensions.
*2 : Switches other than the above models, such as switches with connectors, are also available. Refer to Ending Page 1.
*3 : The max. load current is 20 mA at 25°C. The current is lower than 20 mA if the operating ambient temperature around the switch is higher than 25°C. (5 to 10 mA at 60°C)
*4 : Switch for AC magnetic field (T2YD/T2YDT) cannot be used in DC magnetic field.
*5 : The F-switch uses a bend-resistant lead wire.

Theoretical thrust table

(Unit: N)

Bore size (mm)	Operating direction	Working pressure MPa								
		0.2	0.3	0.4	0.5	0.6	0.7	0.8	0.9	1.0
ø20	Push	-	94.2	1.26×10^2	1.57×10^2	1.88×10^2	2.20×10^2	2.51×10^2	2.83×10^2	3.14×10^2
	Pull	-	70.7	94.2	1.18×10^2	1.41×10^2	1.65×10^2	1.88×10^2	2.12×10^2	2.36×10^2
ø25	Push	-	1.47×10^2	1.96×10^2	2.45×10^2	2.95×10^2	3.44×10^2	3.93×10^2	4.42×10^2	4.91×10^2
	Pull	-	1.13×10^2	1.51×10^2	1.89×10^2	2.27×10^2	2.64×10^2	3.02×10^2	3.40×10^2	3.78×10^2
ø32	Push	1.61×10^2	2.41×10^2	3.22×10^2	4.02×10^2	4.83×10^2	5.63×10^2	6.43×10^2	7.24×10^2	8.04×10^2
	Pull	1.21×10^2	1.81×10^2	2.41×10^2	3.02×10^2	3.62×10^2	4.22×10^2	4.83×10^2	5.43×10^2	6.03×10^2
ø40	Push	2.51×10^2	3.77×10^2	5.03×10^2	6.28×10^2	7.54×10^2	8.80×10^2	1.01×10^3	1.13×10^3	1.26×10^3
	Pull	2.11×10^2	3.17×10^2	4.22×10^2	5.28×10^2	6.33×10^2	7.39×10^2	8.44×10^2	9.50×10^2	1.06×10^3
ø50	Push	3.93×10^2	5.89×10^2	7.85×10^2	9.82×10^2	1.18×10^3	1.37×10^3	1.57×10^3	1.77×10^3	1.96×10^3
	Pull	3.30×10^2	4.95×10^2	6.60×10^2	8.25×10^2	9.90×10^2	1.15×10^3	1.32×10^3	1.48×10^3	1.65×10^3
ø63	Push	6.23×10^2	9.35×10^2	1.25×10^3	1.56×10^3	1.87×10^3	2.18×10^3	2.49×10^3	2.81×10^3	3.12×10^3
	Pull	5.61×10^2	8.41×10^2	1.12×10^3	1.40×10^3	1.68×10^3	1.96×10^3	2.24×10^3	2.52×10^3	2.80×10^3
ø80	Push	1.01×10^3	1.51×10^3	2.01×10^3	2.51×10^3	3.02×10^3	3.52×10^3	4.02×10^3	4.52×10^3	5.03×10^3
	Pull	9.07×10^2	1.36×10^3	1.81×10^3	2.27×10^3	2.72×10^3	3.17×10^3	3.63×10^3	4.08×10^3	4.54×10^3
ø100	Push	1.57×10^3	2.36×10^3	3.14×10^3	3.93×10^3	4.71×10^3	5.50×10^3	6.28×10^3	7.07×10^3	7.85×10^3
	Pull	1.43×10^3	2.14×10^3	2.86×10^3	3.57×10^3	4.29×10^3	5.00×10^3	5.72×10^3	6.43×10^3	7.15×10^3

SCP*3
CMK2
CMA2
SCM
SCG
SCA2
SCS2
CKV2
CAV2/COVP/N2
SSD2
SSG
SSD
CAT
MDC2
MVC
SMG
MSD/MSDG
FC*
STK
SRL3
SRG3
SRM3
SRT3
MRL2
MRG2
SM-25
ShkAbs
FJ
FK
Spd Contr
Ending

How to order

No switch (without magnet for switch)

SSD2-K - 40 ◯ C - 10 ———— N - LB - I

With switch (built-in magnet for switch)

SSD2-KL - 40 ◯ C - 10 - T0H - R - N - LB - I

Ⓐ Bore size

Rubber-air cushioned

Ⓑ Port thread

Ⓒ Stroke

Ⓓ Switch model No. *6

Ⓔ Switch quantity

Ⓕ Option *1

Ⓖ Mounting bracket *2 *3

Ⓗ Accessory*4

Code	Description
Ⓐ Bore size (mm)	
20	ø20
25	ø25
32	ø32
40	ø40
50	ø50
63	ø63
80	ø80
100	ø100

Ⓑ Port thread	
Blank	Rc thread
N	NPT thread (ø32 and over) (made to order)
G	G thread (ø32 and over) (made to order)

Ⓒ Stroke (mm)

Refer to the stroke table on the following page.

Ⓓ Switch model No.

Lead wire Straight type	Lead wire L-shaped	Contact	Voltage AC	Voltage DC	Indicator	Lead wire	Bore size 20	25	32	40	50	63	80	100
-	F2S*	Proximity		●	1-color LED	2-wire	●	●						
-	F3S*			●		3-wire	●	●						
F2H*	F2V*			●		2-wire	●	●						
F3H*	F3V*			●		3-wire	●	●						
F3PH*	F3PV*			●	1-color LED (PNP output) (made to order)	3-wire	●	●						
F2YH*	F2YV*			●	2-color LED	2-wire	●	●						
F3YH*	F3YV*			●		3-wire	●	●						
T0H*	T0V*	Reed	●	●	1-color LED	2-wire	●	●	●	●	●	●	●	●
T5H*	T5V*		●	●	No indicator lamp		●	●	●	●	●	●	●	●
T8H*	T8V*		●	●	1-color LED					●	●	●	●	●
T1H*	T1V*	Proximity	●		1-color LED	2-wire	●	●	●	●	●	●	●	●
T2H*	T2V*			●			●	●	●	●	●	●	●	●
T3H*	T3V*			●		3-wire	●	●	●	●	●	●	●	●
T3PH*	T3PV*			●	1-color LED (PNP output)		●	●	●	●	●	●	●	●
T2WH*	T2WV*			●	2-color LED	2-wire	●	●	●	●	●	●	●	●
T2YH*	T2YV*			●			●	●	●	●	●	●	●	●
T3WH*	T3WV*			●		3-wire	●	●	●	●	●	●	●	●
T3YH*	T3YV*			●			●	●	●	●	●	●	●	●
T2YD*	-			●	2-color LED for AC magnetic field	2-wire	●	●	●	●	●	●	●	●
T2YDT*	-			●			●	●	●	●	●	●	●	●
T2JH*	T2JV*			●	1-color LED off-delay	2-wire	●	●	●	●	●	●	●	●

*** Lead wire length**	
Blank	1 m (standard)
3	3 m (option)
5	5 m (option) *7

Ⓔ Switch quantity	
R	1 on rod side
H	1 on head side
D	2

Ⓕ Option	
Blank	Rod end female thread
N	Rod end male thread
M	Piston rod material (stainless steel)

Ⓖ Mounting bracket	
Blank	Without mounting bracket
LB	Axial foot type
CB	Clevis bracket (pin and snap ring attached)
FA	Rod side flange
FB	Head side flange

Ⓗ Accessory (available when rod end male thread "N" is selected)	
I	Rod eye
Y	Rod clevis (pin and snap ring attached)

Precautions for model No. selection

*1: Piston rod of ø20 and ø25 is stainless steel as standard. C-snap ring is stainless steel instead of steel. The rod end male thread nut is stainless steel.
*2: MountingThe bracket is attached at shipment.
***3: The projection dimension of piston rod WF when LB or FA is selected is different from that of the standard. Refer to the dimensions on pages 761, 763, 765 and 766. The number of the specified protruding dimension will be added at the end of the model No. printed on the metal plate on the body.**
*4: "I" and "Y" cannot be selected together.
***5: Refer to pages 750 and 751 for combinations of variations/options.**
*6: Switches are shipped with the product. Contact CKD if assembling before shipment is necessary.
*7: F-switch cannot be selected.

[Example of model No.]

SSD2-KL-32C-10-T0H-R-N

Model: Compact cylinder, rubber-air cushioned

Ⓐ Bore size : ø32 mm
Ⓑ Port thread : Rc thread
Ⓒ Stroke : 10 mm
Ⓓ SwitchModel No. :Reed switch T0H, lead wire length 1 m
Ⓔ Switch quantity : 1 on rod side
Ⓕ Option : Rod end male thread

How to order switch

SW - T0H

(Item Ⓓ above)

[Stroke table]

Stroke (mm)		Applicable bore size							
		ø20	ø25	ø32	ø40	ø50	ø63	ø80	ø100
Standard stroke	5	●	●	●	●				
	10	●	●	●	●	●	●	●	●
	15	●	●	●	●	●	●	●	●
	20	●	●	●	●	●	●	●	●
	25	●	●	●	●	●	●	●	●
	30	●	●	●	●	●	●	●	●
	35	●	●	●	●	●	●	●	●
	40	●	●	●	●	●	●	●	●
	45	●	●	●	●	●	●	●	●
	50	●	●	●	●	●	●	●	●
	75			●	●	●	●	●	●
	100			●	●	●	●	●	●
Min. stroke (mm) *1		5					10		
Max. stroke (mm)		50		100					
Custom stroke *2		In 1 mm increments							

1 : Less than 10 mm with the 2-color LED, off-delay, AC magnetic field proof, T1 or T8* switch is not available. Refer to page 832 for the number of installed switches and the min. stroke.
*2 : The total length when using a custom stroke is the same as that when using the next longer standard stroke.
*3 : Refer to page 789 for the min. stroke with mounting bracket LB.

How to order mounting bracket

Bore size (mm) / Mounting bracket	ø20	ø25	ø32	ø40	ø50	ø63	ø80
Foot (LB)	SSD2-LB-20	SSD2-LB-25	SSD2-LB-32	SSD2-LB-40	SSD2-LB-50	SSD2-LB-63	SSD2-LB-80
Flange (FA/FB)	SSD2-FA-20	SSD2-FA-25	SSD2-FA-32	SSD2-FA-40	SSD2-FA-50	SSD2-FA-63	SSD2-FA-80
Clevis bracket (CB)	SSD2-CB-20	SSD2-CB-25	SSD2-CB-32	SSD2-CB-40	SSD2-CB-50	SSD2-CB-63	SSD2-CB-80

Bore size (mm) / Mounting bracket	ø100
Foot (LB)	SSD2-LB-100
Flange (FA/FB)	SSD2-FA-100
Clevis bracket (CB)	SSD2-CB-100

*1: The foot mounting bracket is provided as 2 pcs./set.

Internal structure and parts list

● SSD2-KL-20C, 25C
(double acting/single rod high load/rubber-air cushioned/with switch)

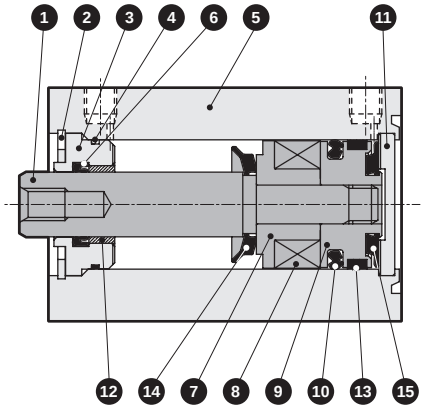

● SSD2-KL-32C to 100C
(double acting/single rod high load/rubber-air cushioned/with switch)

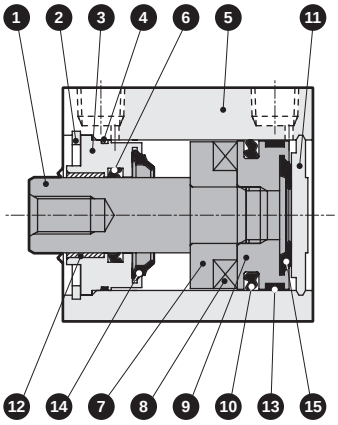

● SSD2-K-20C, 25C
(double acting/single rod high load/rubber-air cushioned)

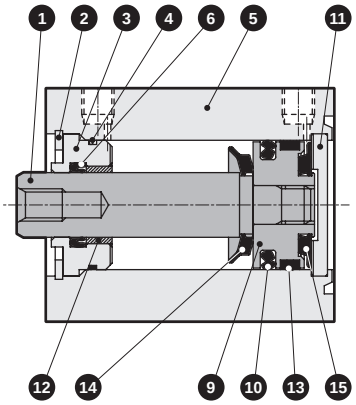

● SSD2-K-32C to 100C
(double acting/single rod high load/rubber-air cushioned)

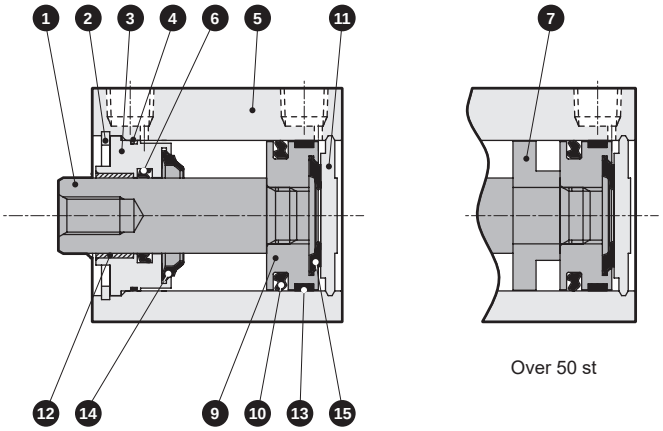

No.	Part name	Material	Remarks	No.	Part name	Material	Remarks
1	Piston rod	ø20 to ø25: Stainless steel ø32 to ø100: steel	Industrial chrome plating	8	Magnet	Plastic	
				9	Piston	Aluminum alloy	Chromate
2	C-snap ring	Steel	Zinc phosphate	10	Piston packing	Nitrile rubber	
3	Rod metal	ø20 to ø50: Special aluminum ø63 to ø100: Aluminum alloy	ø20 to ø50: Alumite ø63 to ø100: Chromate	11	Cover	ø20 to ø25: Stainless steel ø32 to ø100: Aluminum alloy	ø32 to ø100: Alumite
4	Rod metal gasket	Nitrile rubber		12	Bush	Oiles drymet	
5	Body	Aluminum alloy	Hard alumite	13	Wear ring	Polyacetal resin	
6	Rod packing	Nitrile rubber		14	Rubber air cushion (R)	Special rubber	
7	Spacer	Aluminum alloy	Chromate	15	Rubber air cushion (H)	Special rubber	

Repair parts list

Bore size (mm)	Kit No.	Repair parts No.
ø20	SSD2-K-20CK	4 6 10 13 14 15
ø25	SSD2-K-25CK	
ø32	SSD2-K-32CK	
ø40	SSD2-K-40CK	
ø50	SSD2-K-50CK	
ø63	SSD2-K-63CK	
ø80	SSD2-K-80CK	
ø100	SSD2-K-100CK	

Dimensions

Same as SSD2-K Series (double acting/high load). Refer to pages 782 to 790.

Technical data

[Comparison of collision noise level]

Standard rubber cushion :
Rubber-air cushion :

Values are comparison samples obtained under the conditions below.
As the values vary with base rigidity, etc., they are not guaranteed.

(Test conditions)

Cylinder	: SSD2
Mounting direction of cylinder	: Vertical with rod upward
Cylinder supply pressure	: 0.5 MPa
Measurement position of sound level meter	: 1 m from sample

ø20

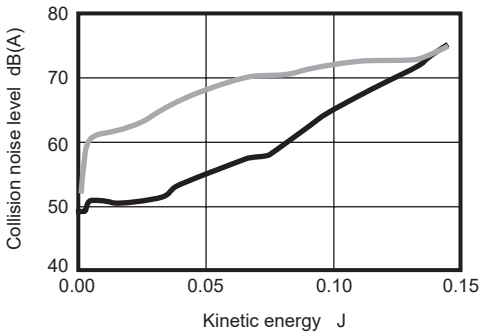

ø25

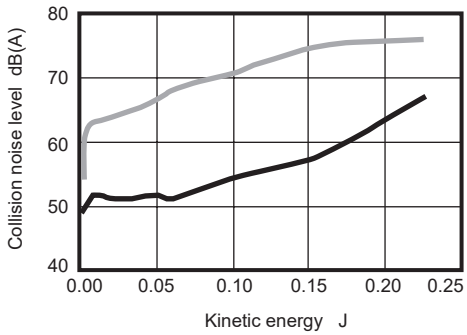

ø32

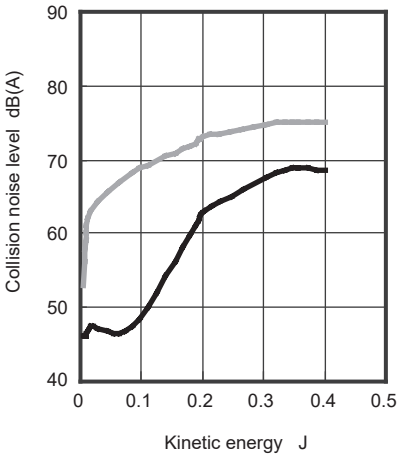

ø40

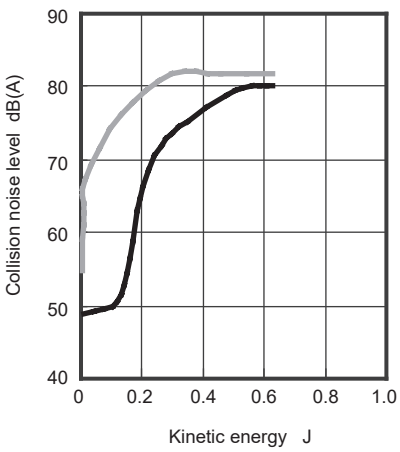

ø50

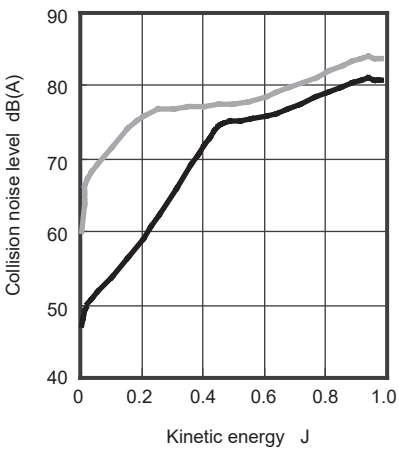

ø63

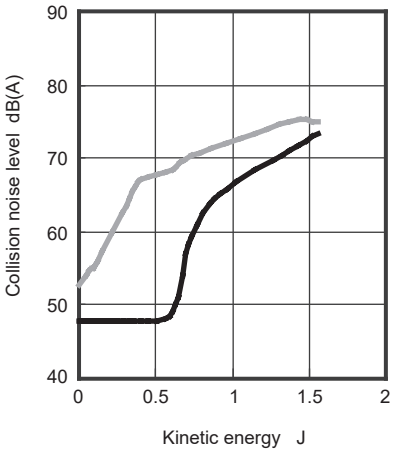

ø80

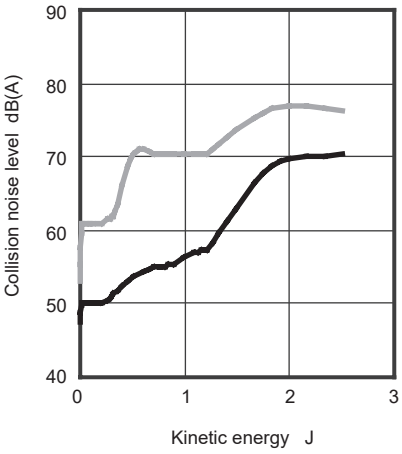

ø100

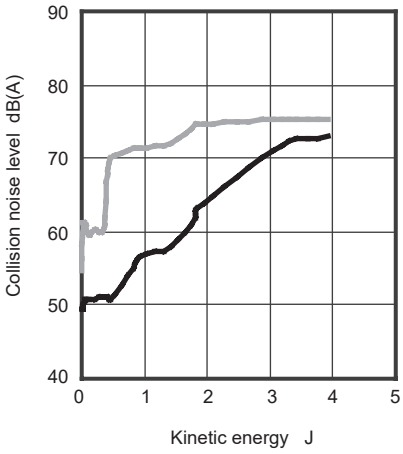

Technical data

[Comparison of collision acceleration]

Standard rubber cushion :
Rubber-air cushion :

ø20

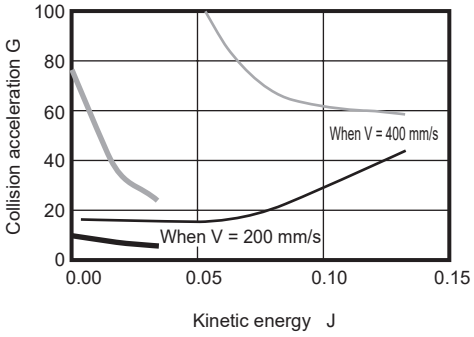

ø25

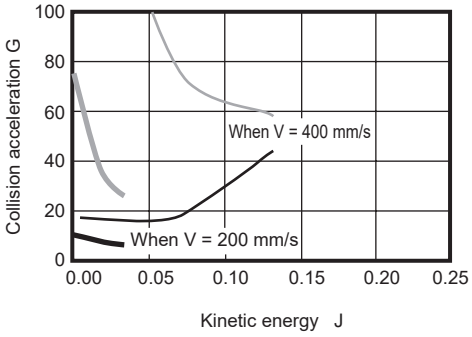

ø32

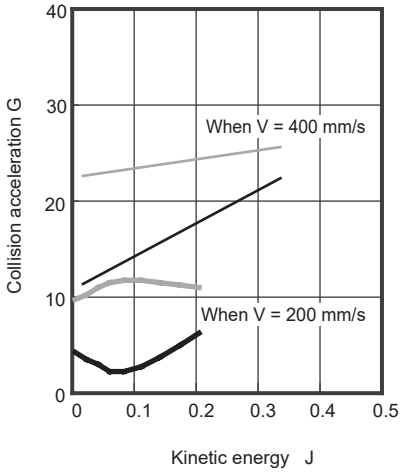

ø40

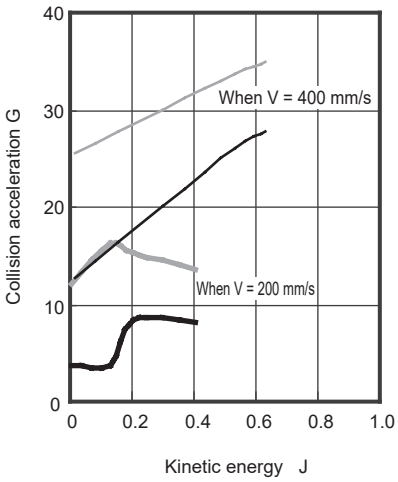

ø50

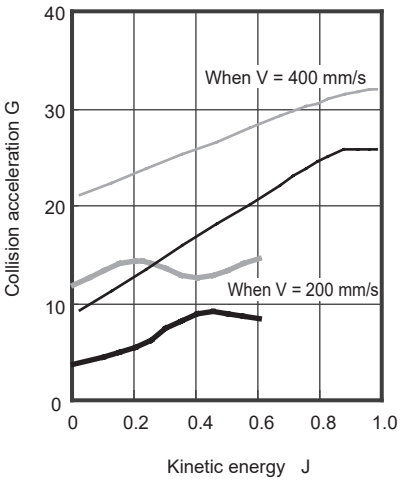

ø63

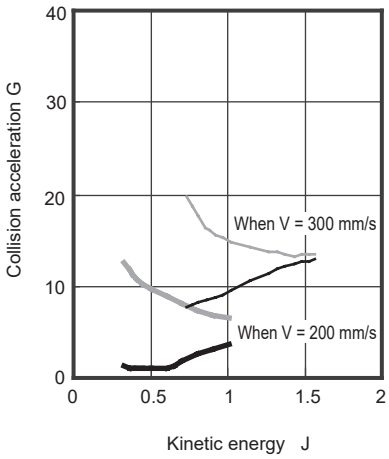

ø80

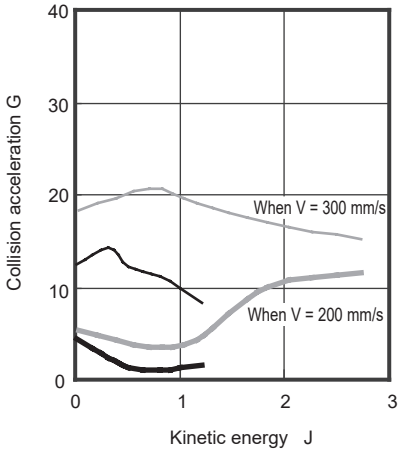

ø100

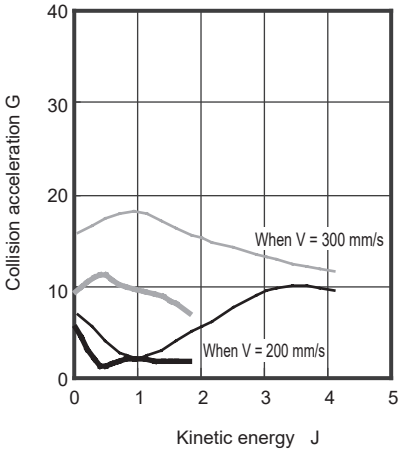

[Allowable energy value]

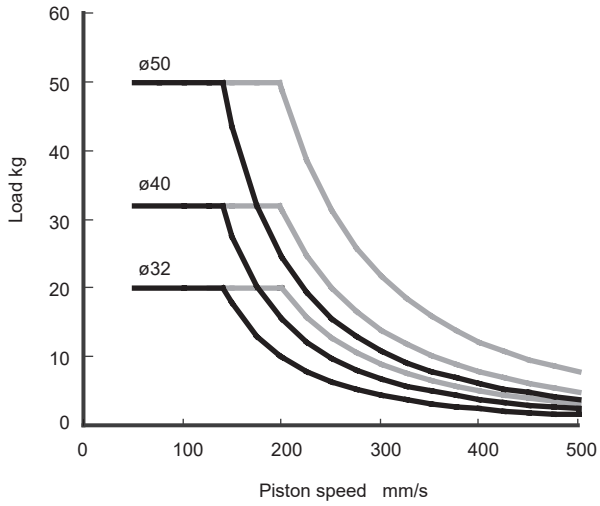

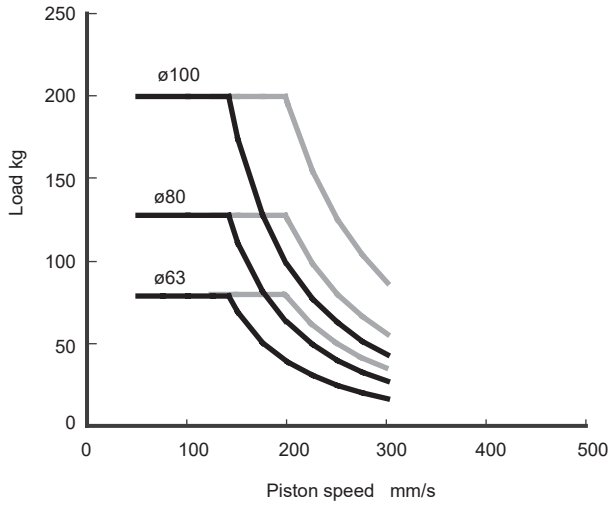

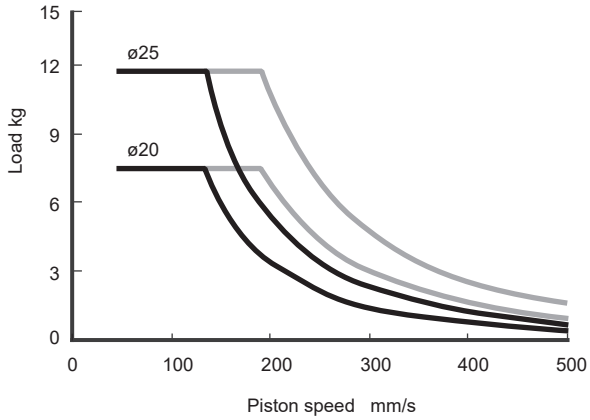

Usable in the range below and to the left of the curve.
Although it can also be used in the range marked with ——— in the figure, we recommend use within the range marked with a solid line to maximize the noise reduction effect.

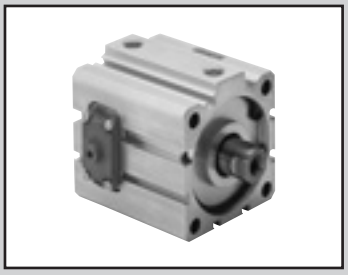

Compact cylinder double acting/with position locking

SSD2-Q Series

● Bore size: ø20/ø25/ø32/ø40/ø50/ø63/ø80/ø100

JIS symbol

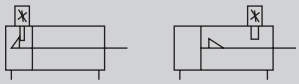

RoHS CAD

Specifications

Item	SSD2-Q SSD2-QL (with switch)							
Bore size mm	ø20	ø25	ø32	ø40	ø50	ø63	ø80	ø100
Actuation	Double acting/position locking							
Working fluid	Compressed air							
Max. working pressure MPa	1.0 (≈150 psi, 10 bar)							
Min. working pressure MPa	0.15 (≈22 psi, 1.5 bar)							
Proof pressure MPa	1.6 (≈230 psi, 16 bar)							
Ambient temperature °C	-10 (14°F) to 60 (140°F) (no freezing)							
Port size	M5		Rc1/8		Rc1/4		Rc3/8	
Stroke tolerance mm	$^{+2.5}_{0}$							
Working piston speed mm/s	50 to 500					50 to 300		
Cushion	Rubber cushion							
Lubrication	Not required (use turbine oil class 1 ISO VG32 if necessary for lubrication)							
Position locking mechanism	Rod side or head side							
Holding force N	Max. thrust x 0.7							
Allowable absorbed energy J	0.16	0.16	0.40	0.63	0.98	1.56	2.51	3.92

Stroke

Bore size (mm)	Standard stroke (mm)	Max. stroke (mm)	Min. stroke (mm)
ø20	10/15/20/25/50/75/100	100	10
ø25			
ø32			
ø40			
ø50			
ø63			
ø80	25/50/75/100		25
ø100			

⚠ Be sure to read the Safety precautions for the position locking on pages 1058 to 1063 before use.

Theoretical thrust table

(Unit: N)

Bore size (mm)	Operating direction	Working pressure MPa 0.15	0.2	0.3	0.4	0.5	0.6	0.7	0.8	0.9	1.0
ø20	Push	47.1	62.8	94.2	1.26×10^2	1.57×10^2	1.88×10^2	2.20×10^2	2.51×10^2	2.83×10^2	3.14×10^2
	Pull	35.3	47.1	70.7	94.2	1.18×10^2	1.41×10^2	1.65×10^2	1.88×10^2	2.12×10^2	2.36×10^2
ø25	Push	73.6	98.2	1.47×10^2	1.96×10^2	2.45×10^2	2.95×10^2	3.44×10^2	3.93×10^2	4.42×10^2	4.91×10^2
	Pull	56.7	75.6	1.13×10^2	1.51×10^2	1.89×10^2	2.27×10^2	2.64×10^2	3.02×10^2	3.40×10^2	3.78×10^2
ø32	Push	1.21×10^2	1.61×10^2	2.41×10^2	3.22×10^2	4.02×10^2	4.83×10^2	5.63×10^2	6.43×10^2	7.24×10^2	8.04×10^2
	Pull	90.5	1.21×10^2	1.81×10^2	2.41×10^2	3.02×10^2	3.62×10^2	4.22×10^2	4.83×10^2	5.43×10^2	6.03×10^2
ø40	Push	1.88×10^2	2.51×10^2	3.77×10^2	5.03×10^2	6.28×10^2	7.54×10^2	8.80×10^2	1.01×10^3	1.13×10^3	1.26×10^3
	Pull	1.58×10^2	2.11×10^2	3.17×10^2	4.22×10^2	5.28×10^2	6.33×10^2	7.39×10^2	8.44×10^2	9.50×10^2	1.06×10^3
ø50	Push	2.95×10^2	3.93×10^2	5.89×10^2	7.85×10^2	9.82×10^2	1.18×10^3	1.37×10^3	1.57×10^3	1.77×10^3	1.96×10^3
	Pull	2.47×10^2	3.30×10^2	4.95×10^2	6.60×10^2	8.25×10^2	9.90×10^2	1.15×10^3	1.32×10^3	1.48×10^3	1.65×10^3
ø63	Push	4.68×10^2	6.23×10^2	9.35×10^2	1.25×10^3	1.56×10^3	1.87×10^3	2.18×10^3	2.49×10^3	2.81×10^3	3.12×10^3
	Pull	4.20×10^2	5.61×10^2	8.41×10^2	1.12×10^3	1.40×10^3	1.68×10^3	1.96×10^3	2.24×10^3	2.52×10^3	2.80×10^3
ø80	Push	7.54×10^2	1.01×10^3	1.51×10^3	2.01×10^3	2.51×10^3	3.02×10^3	3.52×10^3	4.02×10^3	4.52×10^3	5.03×10^3
	Pull	6.80×10^2	9.07×10^2	1.36×10^3	1.81×10^3	2.27×10^3	2.72×10^3	3.17×10^3	3.63×10^3	4.08×10^3	4.54×10^3
ø100	Push	1.18×10^3	1.57×10^3	2.36×10^3	3.14×10^3	3.93×10^3	4.71×10^3	5.50×10^3	6.28×10^3	7.07×10^3	7.85×10^3
	Pull	1.07×10^3	1.43×10^3	2.14×10^3	2.86×10^3	3.57×10^3	4.29×10^3	5.00×10^3	5.72×10^3	6.43×10^3	7.15×10^3

Switch specifications (F-switch)

● 1-color/2-color LED

Item	2-wire proximity	3-wire proximity	2-wire proximity		3-wire proximity		
	F2S	F3S	F2H/F2V	F2YH/F2YV	F3H/F3V	F3PH/F3PV (made to order)	F3YH/F3YV
Applications	Dedicated for programmable controller	For programmable controller, relay	Dedicated for programmable controller		For programmable controller, relay		
Output method	-	NPN output	-		NPN output	PNP output	NPN output
Power supply voltage	-	10 to 28 VDC	-		10 to 28 VDC	4.5 to 28 VDC	10 to 28 VDC
Load voltage	10 to 30 VDC	30 VDC or less	10 to 30 VDC	24 VDC ±10%	30 VDC or less		
Load current	5 to 20 mA	50 mA or less	5 to 20 mA		50 mA or less		
Indicator	LED (Lit when ON)		Yellow LED (Lit when ON)	Red/green LED (Lit when ON)	Yellow LED (Lit when ON)		Red/green LED (Lit when ON)
Leakage current	1 mA or less	10 μA or less	1 mA or less		10 μA or less		
Weight g	1 m:10 3 m:29						

Switch specifications (T-switch)

● 1-color/2-color LED/for AC magnetic field proof

Item	2-wire proximity	2-wire proximity			3-wire proximity				2-wire reed							2-wire proximity
	T1H/T1V	T2H/T2V/T2JH/T2JV	T2YH/T2YV	T2WH/T2WV	T3H/T3V	T3PH/T3PV	T3YH/T3YV	T3WH/T3WV	T0H/T0V		T5H/T5V		T8H/T8V			T2YD(*4) T2YDT
Applications	For programmable controller, relay, compact solenoid valve	Dedicated for programmable controller			For programmable controller, relay				For programmable controller, relay		For programmable controller, relay, IC circuit (no indicator lamp), serial connection		For programmable controller, relay			For programmable controller
Output method	-				NPN output	PNP output	NPN output	NPN output	-							
Pwr. supp. V.	-				10 to 28 VDC				-							
Load voltage	85 to 265 VAC	10 to 30 VDC		24 VDC ±10%	30 VDC or less				12/24 VDC	100/110 VAC	5/12/24 VDC	100/110 VAC	12/24 VDC	110 VAC	220 VAC	24 VDC ±10%
Load current	5 to 100 mA	5 to 20 mA (*3)			100 mA or less		50 mA or less		5 to 50 mA	7 to 20 mA	50 mA or less	20 mA or less	5 to 50 mA	7 to 20 mA	7 to 10 mA	5 to 20 mA
Indicator	LED (Lit when ON)	LED (Lit when ON)	Red/green LED (Lit when ON)	Red/green LED (Lit when ON)	LED (Lit when ON)	Yellow LED (Lit when ON)	Red/green LED (Lit when ON)	Red/green LED (Lit when ON)	LED (Lit when ON)		No indicator lamp		LED (Lit when ON)			Red/green LED (Lit when ON)
Leakage current	≤ 1 mA at 100 VAC, ≤ 2 mA at 200 VAC	1 mA or less			10 μA or less				0 mA							1 mA or less
Weight g	1 m:33 3 m:87 5 m:142	1 m:18 3 m:49 5 m:80	1 m:33 3 m:87 5 m:142	1 m:18 3 m:49 5 m:80	1 m:18 3 m:49 5 m:80		1 m:33 3 m:87 5 m:142	1 m:18 3 m:49 5 m:80	1 m:18 3 m:49 5 m:80				1 m:33 3 m:87 5 m:142			1 m:61 3 m:166 5 m:272

*1 : Refer to Ending Page 1 for detailed switch specifications and dimensions.
*2 : Switches other than the above models, such as switches with connectors, are also available. Refer to Ending Page 1.
*3 : The max. load current is 20 mA at 25°C. The current is lower than 20 mA if the operating ambient temperature around the switch is higher than 25˚C. (5 to 10 mA at 60°C)
*4 : Switch for AC magnetic field (T2YD/T2YDT) cannot be used in DC magnetic field.
*5 : The F-switch uses a bend-resistant lead wire.

Cylinder weight table (the weight of the switches is when there are 2 cylinder switches.)

● With rod side position locking (Unit: g)

Stroke (mm)	10		15		20		25		50		75		100	
Bore size (mm)	No switch	With switch	No switch	With switch	No switch	With switch	No switch	With switch	No switch	With switch	No switch	With switch	No switch	With switch
ø20	201	242	213	254	226	267	238	279	330	370	392	433	455	495
ø25	274	315	290	331	306	347	322	363	439	480	519	560	599	640
ø32	430	474	451	495	473	517	494	538	602	646	709	753	817	861
ø40	632	681	658	708	685	734	711	761	844	893	976	1026	1109	1158
ø50	1096	1147	1138	1189	1180	1231	1222	1273	1432	1483	1642	1693	1852	1903
ø63	1609	1663	1664	1718	1719	1773	1774	1828	2049	2103	2324	2378	2599	2653
ø80	-	-	-	-	-	-	3822	3882	4255	4315	4904	4964	5336	5396
ø100	-	-	-	-	-	-	5769	5835	6339	6405	7194	7260	7764	7830

● With head side position locking (Unit: g)

Stroke (mm)	10		15		20		25		50		75		100	
Bore size (mm)	No switch	With switch	No switch	With switch	No switch	With switch	No switch	With switch	No switch	With switch	No switch	With switch	No switch	With switch
ø20	217	258	230	270	242	283	255	295	330	370	392	433	455	495
ø25	295	336	311	352	327	368	343	384	439	480	519	560	599	640
ø32	462	506	484	528	505	549	527	571	634	678	742	786	849	893
ø40	688	737	714	763	741	790	767	816	900	949	1032	1081	1165	1214
ø50	1180	1231	1222	1273	1264	1315	1306	1357	1516	1567	1726	1777	1936	1987
ø63	1675	1729	1730	1784	1785	1839	1840	1894	2115	2169	2390	2444	2665	2719
ø80	-	-	-	-	-	-	3952	4012	4385	4445	4904	4964	5336	5396
ø100	-	-	-	-	-	-	5940	6006	6510	6576	7194	7260	7764	7830

How to order

● No switch (without magnet for switch)

SSD2-Q - 20 ◯ - 10 - R ——— NM0 - LB - I

● With switch (built-in magnet for switch)

SSD2-QL - 20 ◯ - 10 - R - T0H - R - NM0 - LB - I

Ⓐ Bore size
Ⓑ Port thread
Ⓒ Stroke
Ⓓ Position locking mechanism
Ⓔ Switch model No. *1 *6
Ⓕ Switch quantity
Ⓖ Option *2
Ⓗ Mounting bracket *3 *4
Ⓘ Accessory *5

Precautions for model No. selection

*1 : The F-switch can only be mounted on the piping port surface of bore sizes ø20 and ø25.
*2 : Only non-locking manual override unless "M0" or "M1" of Ⓖ option is selected. A release bolt is not included.
*3 : The mounting bracket is included at shipment.
*4 : The projection dimension of piston rod WF when LB or FA is selected is different from that of the standard. Refer to the dimensions on pages 847, 848, 850 and 851. The number of the specified protruding dimension will be added at the end of the model No. printed on the metal plate on the body.
*5 : "I" and "Y" cannot be selected together.
*6 : Switches are shipped with the product. Contact CKD if assembling before shipment is necessary.
*7 : Refer to pages 750 and 751 for combinations of variations/options.
*8 : F-switch cannot be selected.

[Example of model No.]

SSD2-QL-20-10-R-T0H-R-N-LB-I

Model: Compact cylinder, position locking

Ⓐ Bore size	: ø20 mm
Ⓑ Port thread	: Rc thread
Ⓒ Stroke	: 10mm
Ⓓ Position locking mechanism	: With rod side position locking
Ⓔ Switch model No.	: Reed switch T0H, lead wire 1 m
Ⓕ Switch quantity	: 1 on rod side
Ⓖ Option	: Rod end male thread
Ⓗ Mounting bracket	: Axial foot
Ⓘ Accessory	: Rod eye

How to order switch

SW - T0H

Switch model No. (Item Ⓔ above)

Code	Description
Ⓐ Bore size (mm)	
20	ø20
25	ø25
32	ø32
40	ø40
50	ø50
63	ø63
80	ø80
100	ø100
Ⓑ Port thread	
Blank	Rc thread
NN	NPT thread (ø32 and over) (made-to-order product)
GN	G thread (ø32 and over) (made-to-order product)
Ⓒ Stroke (mm)	
Refer to the stroke table on the following page.	
Ⓓ Position locking mechanism	
R	With rod side position locking
H	With head side position locking

Ⓔ Switch model No.

Lead wire Straight	Lead wire L-shaped	Contact	Voltage AC	Voltage DC	Indicator	Lead wire	Bore size 20	25	32	40	50	63	80	100
-	F2S*	Proximity		●	1-color LED	2-wire	●	●						
-	F3S*	Proximity		●	1-color LED	3-wire	●	●						
F2H*	F2V*	Proximity		●	1-color LED	2-wire	●	●						
F3H*	F3V*	Proximity		●	1-color LED	3-wire	●	●						
F3PH*	F3PV*	Proximity		●	1-color LED (PNP output) (custom)	3-wire	●	●						
F2YH*	F2YV*	Proximity		●	2-color LED	2-wire	●	●						
F3YH*	F3YV*	Proximity		●	2-color LED	3-wire	●	●						
T0H*	T0V*	Reed	●	●	1-color LED	2-wire	●	●	●	●	●	●	●	●
T5H*	T5V*	Reed	●	●	No indicator lamp	2-wire	●	●	●	●	●	●	●	●
T8H*	T8V*	Reed	●	●	1-color LED	2-wire	●	●	●	●	●	●	●	●
T1H*	T1V*	Proximity	●		1-color LED	2-wire	●	●	●	●	●	●	●	●
T2H*	T2V*	Proximity		●	1-color LED	2-wire	●	●	●	●	●	●	●	●
T3H*	T3V*	Proximity		●	1-color LED	3-wire	●	●	●	●	●	●	●	●
T3PH*	T3PV*	Proximity		●	1-color LED (PNP output)	3-wire	●	●	●	●	●	●	●	●
T2WH*	T2WV*	Proximity		●	2-color LED	2-wire	●	●	●	●	●	●	●	●
T2YH*	T2YV*	Proximity		●	2-color LED	2-wire	●	●	●	●	●	●	●	●
T3WH*	T3WV*	Proximity		●	2-color LED	3-wire	●	●	●	●	●	●	●	●
T3YH*	T3YV*	Proximity		●	2-color LED	3-wire	●	●	●	●	●	●	●	●
T2YD*	-	Proximity		●	2-color LED for AC magnetic field	2-wire	●	●	●	●	●	●	●	●
T2YDT*	-	Proximity		●	2-color LED for AC magnetic field	2-wire	●	●	●	●	●	●	●	●
T2JH*	T2JV*	Proximity		●	1-color LED off-delay	2-wire	●	●	●	●	●	●	●	●

*** Lead wire length**	
Blank	1 m (standard)
3	3 m (option)
5	5 m (option) *8
Ⓕ Switch quantity	
R	1 on rod side
H	1 on head side
D	2
Ⓖ Option	
Blank	Rod end female thread
N	Rod end male thread
M0	Non-locking manual override (with release bolt)
M1	Locking manual override
P4	Specifications for rechargeable battery (made to order)
P40	Specifications for rechargeable battery (made to order)
Ⓗ Mounting bracket	
Blank	Without mounting bracket
LB	Axial foot
CB	Clevis bracket (pin and snap ring included)
FA	Rod side flange
FB	Head side flange
Ⓘ Accessory (available when rod end male thread "N" is selected)	
I	Rod eye
Y	Rod clevis (pin and snap ring included)

[Stroke table]

Stroke (mm)		Applicable bore size							
		ø20	ø25	ø32	ø40	ø50	ø63	ø80	ø100
Standard stroke	10	●	●	●	●	●	●		
	15	●	●	●	●	●	●		
	20	●	●	●	●	●	●		
	25	●	●	●	●	●	●	●	●
	50	●	●	●	●	●	●	●	●
	75	●	●	●	●	●	●	●	●
	100	●	●	●	●	●	●	●	●
Min. stroke (mm)		10						25	
Max. stroke (mm)		100							

How to order mounting bracket

Bore size (mm) / Mounting bracket	ø20	ø25	ø32	ø40	ø50	ø63	ø80
Foot (LB)	SSD2-LB-20	SSD2-LB-25	SSD2-LB-32	SSD2-LB-40	SSD2-LB-50	SSD2-LB-63	SSD2-LB-80
Flange (FA/FB)	SSD2-FA-20	SSD2-FA-25	SSD2-FA-32	SSD2-FA-40	SSD2-FA-50	SSD2-FA-63	SSD2-FA-80
Clevis bracket (CB)	SSD2-CB-20	SSD2-CB-25	SSD2-CB-32	SSD2-CB-40	SSD2-CB-50	SSD2-CB-63	SSD2-CB-80

Bore size (mm) / Mounting bracket	ø100
Foot (LB)	SSD2-LB-100
Flange (FA/FB)	SSD2-FA-100
Clevis bracket (CB)	SSD2-CB-100

*1: The foot mounting bracket is provided as 2 pcs./set.

[Explanation of manual override]

● Non-locking manual override (option code: M0)

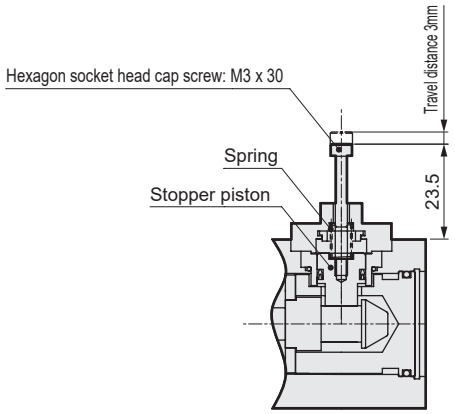

By screwing the hexagon socket head cap screw (M3 x 30) into the stopper piston and pulling the bolt with force of 20 N or more, the stopper piston moves and the lock is released. (Perform when horizontally installed with no load or when the opposite side port is pressurized)
When you release the bolt, the stopper piston is returned to the original position and engaged in the groove, and the piston is locked.

● Locking manual override (option code: M1)

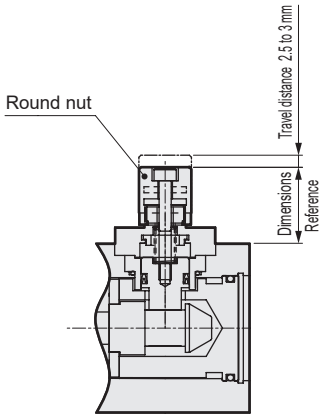

By rotating the round nut leftward (counterclockwise), the stopper piston moves and the lock is released. Locking the round nut by rotating it to the right (clockwise) causes the stopper piston to return. When it fits into the lock groove, the piston is locked. Screw in the round nut fully, since the cylinder may be damaged if the stopper piston is not securely locked in the groove.

Internal structure and parts list (ø20 to ø50)

● SSD2-QL-20 to 50-R
(double acting/single rod/with switch/rod side position locking)

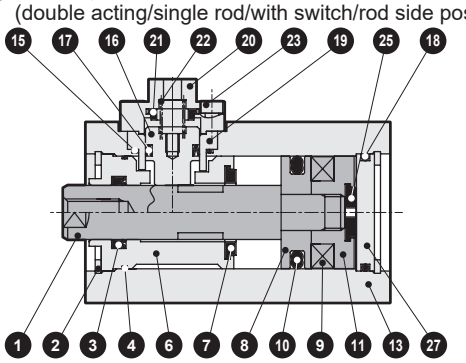

● SSD2-QL-20 to 50-H
(double acting/single rod/with switch/head side position locking)

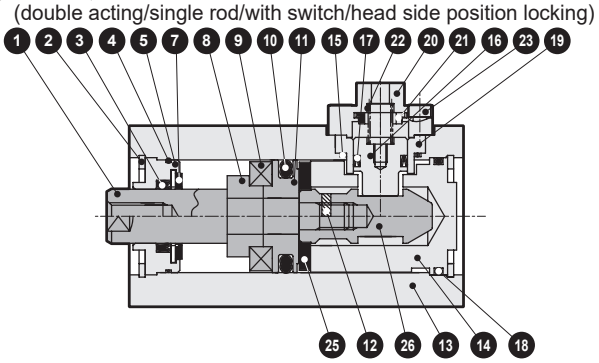

● SSD2-Q-20 to 50-R
(double acting/single rod/rod side position locking)

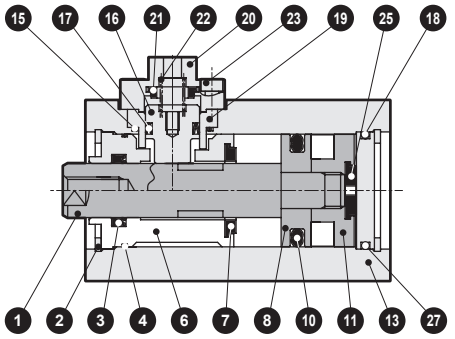

● SSD2-Q-20 to 50-H
(double acting/single rod/head side position locking)

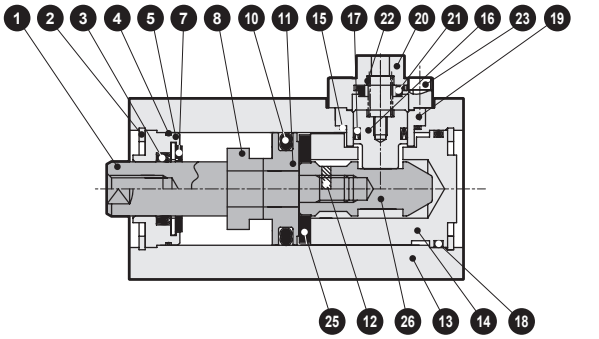

● ø20, ø25: 50 stroke and over

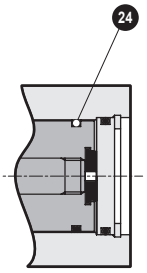

● ø20, ø25: 50 stroke and over

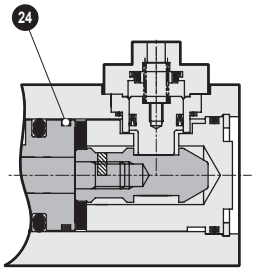

● Locking manual override

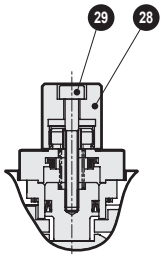

Parts list

No.	Part name	Material	Remarks	No.	Part name	Material	Remarks
1	Piston rod	ø20 to ø25: Stainless steel ø32 to ø50: Steel	Industrial chrome plating	16	Stopper piston	Steel	Nitriding
2	C-snap ring	Steel	Zinc phosphate	17	Stopper packing	Nitrile rubber	
3	Rod packing	Nitrile rubber		18	O-ring	Nitrile rubber	
4	Rod metal gasket	Nitrile rubber		19	Stopper housing	ø20 to ø30, ø50: Aluminum alloy	Alumite
5	Rod metal	Special aluminum	Alumite			ø40: Alloy steel	Chromate
6	Rod cover	Aluminum alloy	Alumite	20	Stopper cover	Aluminum alloy	Chromate
7	Cushion rubber (R)	Urethane rubber		21	Cushion rubber	Urethane rubber	
8	Spacer	Aluminum alloy	ø20 to ø32: Chromate	22	Coil spring	Piano wire	Electrodeposition
9	Magnet	Plastic		23	Hexagon socket head cap screw	Steel	
10	Piston packing	Nitrile rubber		24	Wear ring	Polyacetal resin (only for ø20 and ø25 with 50 mm stroke and over)	
11	Piston	Aluminum alloy	Chromate	25	Cushion rubber (H)	Urethane rubber	
12	Spring pin	Steel	Black finish	26	Sleeve	Steel	Nitriding
13	Body	Aluminum alloy	Hard alumite	27	Cover	Aluminum alloy	Chromate
14	Head cover	Aluminum alloy	Chromate	28	Round nut	Aluminum alloy	
15	O-ring	Nitrile rubber		29	Hexagon socket head cap screw	Steel	

Repair parts list

Bore size (mm)	Kit No.	Repair parts No.
ø20	SSD2-Q-R-20K	3 4 7 10 15 17 18 21 24 25
ø25	SSD2-Q-R-25K	
ø32	SSD2-Q-R-32K	
ø40	SSD2-Q-R-40K	
ø50	SSD2-Q-R-50K	

*1: 24 is included only with ø20 and ø25.

Internal structure and parts list (ø63 to ø100)

● SSD2-QL-63 to 100-R
(double acting/single rod/with switch/rod side position locking)

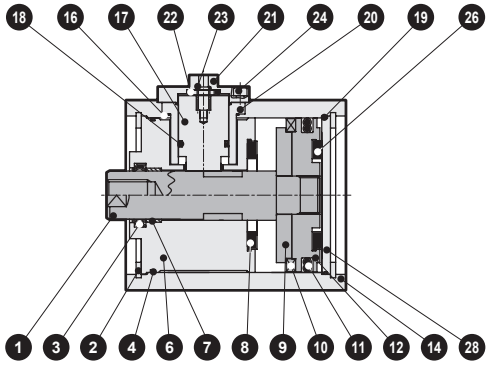

● SSD2-QL-63 to 100-H
(double acting/single rod/with switch/head side position locking)

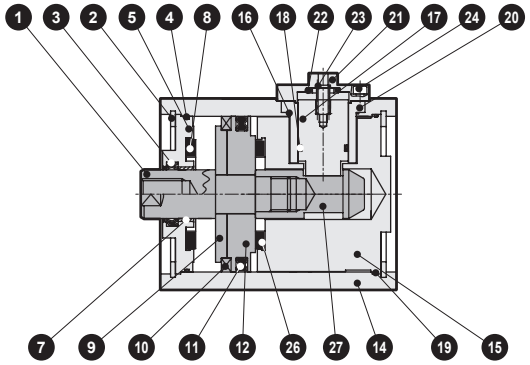

● SSD2-Q-63 to 100-R
(double acting/single rod/rod side position locking)

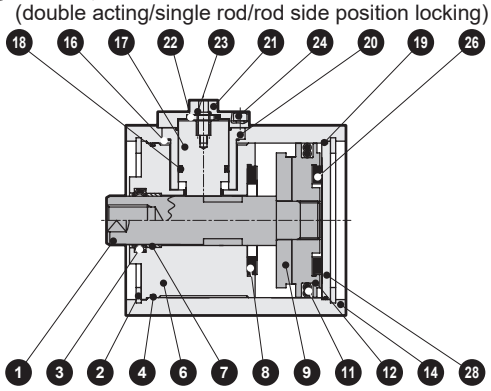

● SSD2-Q-63 to 100-H
(double acting/single rod/head side position locking)

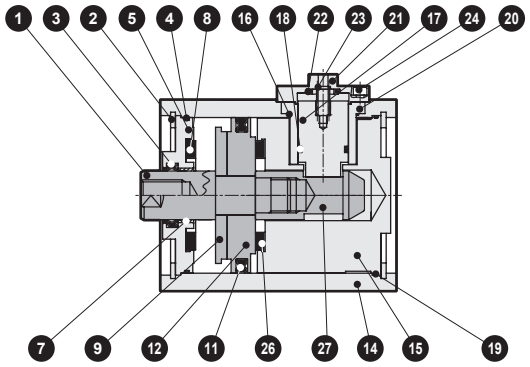

● ø80, ø100: 75 stroke and over

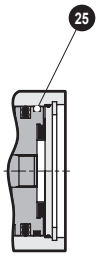

● ø80, ø100: 75 stroke and over

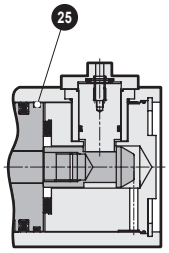

● Locking manual override

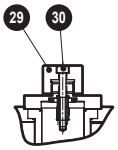

Parts list

No.	Part name	Material	Remarks	No.	Part name	Material	Remarks
1	Piston rod	Steel	Industrial chrome plating	17	Stopper piston	Steel	Nitriding
2	C-snap ring	Steel	Zinc phosphate	18	Stopper packing	Nitrile rubber	
3	Rod packing	Nitrile rubber		19	O-ring	Nitrile rubber	
4	Rod metal gasket	Nitrile rubber		20	Stopper housing	ø80: Aluminum alloy	Alumite
5	Rod metal	Special aluminum	Alumite			ø63, ø100: Alloy steel	Chromate
6	Rod cover	Aluminum alloy	Alumite	21	Stopper cover	Aluminum alloy	Chromate
7	Bush	Oiles drymet		22	Cushion rubber	Urethane rubber	
8	Cushion rubber (R)	Urethane rubber		23	Coil spring	Piano wire	Electrodeposition
9	Spacer	Aluminum alloy		24	Hexagon socket head cap screw	Steel	
10	Magnet	Plastic		25	Wear ring	Polyacetal resin (only for ø80 and ø100 with 75 mm stroke and over)	
11	Piston packing	Nitrile rubber		26	Cushion rubber (H)	Urethane rubber	
12	Piston	Aluminum alloy	Chromate	27	Sleeve	Steel	Nitriding
13	Spring pin	Steel	Black finish	28	Cover	Aluminum alloy	Chromate
14	Body	Aluminum alloy	Hard alumite	29	Round nut	Aluminum alloy	
15	Head cover	Aluminum alloy	Chromate	30	Hexagon socket head cap screw	Steel	
16	O-ring	Nitrile rubber					

Repair parts list

Bore size (mm)	Kit No.	Repair parts No.
ø63	SSD2-Q-H-63K	3 4 8 11 16 18 19 22 25 26
ø80	SSD2-Q-H-80K	
ø100	SSD2-Q-H-100K	

*1: 25 is included only with ø80 and ø100.

SCP*3
CMK2
CMA2
SCM
SCG
SCA2
SCS2
CKV2
CAV2/COVP/N2
SSD2
SSG
SSD
CAT
MDC2
MVC
SMG
MSD/MSDG
FC*
STK
SRL3
SRG3
SRM3
SRT3
MRL2
MRG2
SM-25
ShkAbs
FJ
FK
Spd Contr
Ending

Dimensions (ø20, ø25) CAD

● SSD2-Q(L)-20 to 25-R
* The dimensions are common for types with and without switches.

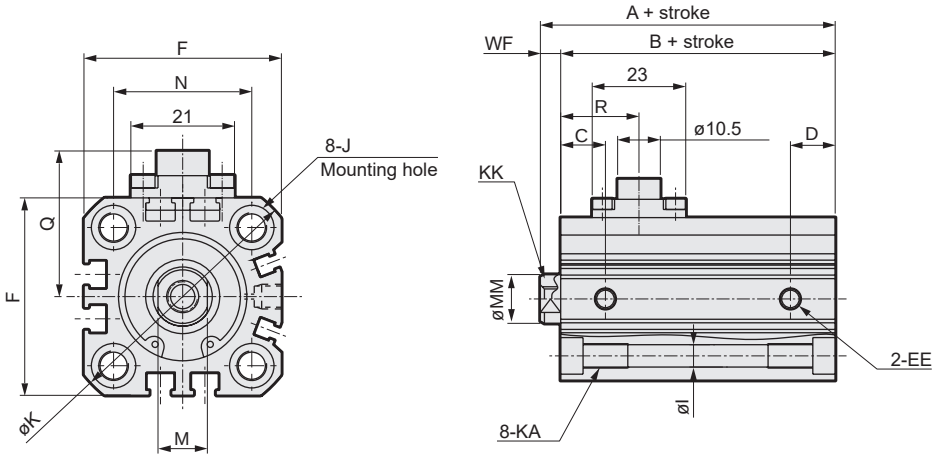

● Rod end male thread

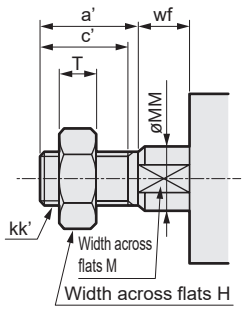

● SSD2-Q(L)-20 to 25-H
* The dimensions are common for types with and without switches.

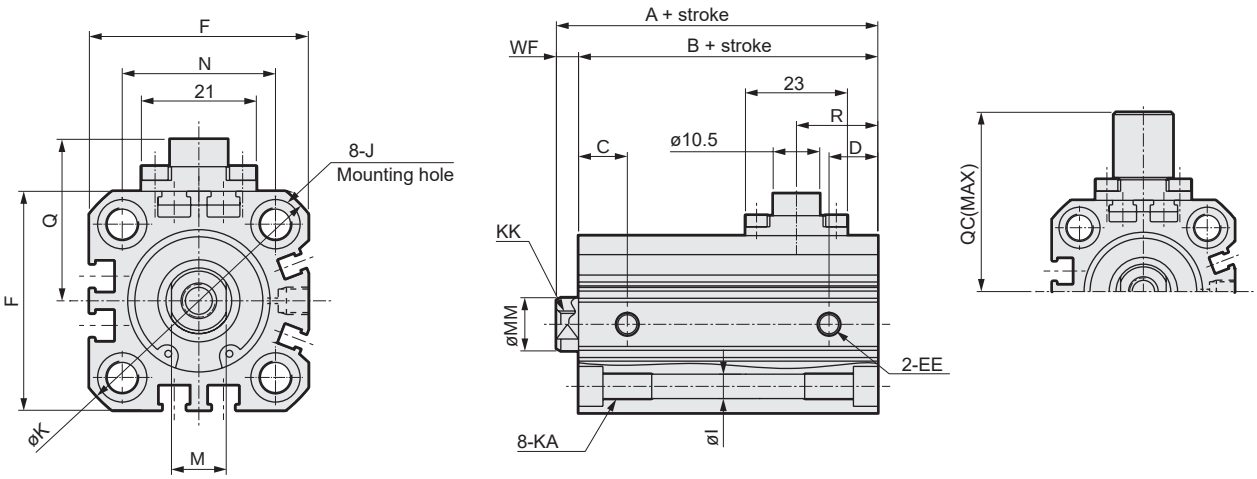

● Precautions regarding the switch mounting groove
*1: Only F-switch is available for the ø20 or ø25 piping port surface.

Code / Bore size (mm)	Common dimensions												
	EE	F	I	J	K	KA	KK	M	MM	N	WF *1	Q	QC
ø20	M5	36	5.5	9 spot face depth 5.5	47	M6 depth 11	M5 depth 7	8	10	25.5	4.5(14.5)	28.5	40
ø25	M5	40	5.5	9 spot face depth 5.5	51	M6 depth 11	M6 depth 12	10	12	28	5(15)	29.5	41

Code / Bore size (mm)	With rod side position locking mechanism					With head side position locking mechanism				
	A *1	B *1	C	D	R	A *1	B *1	C	D	R
ø20	59(80.5)	54.5(66)	9.5	8	18.6	65.5(80.5)	61(66)	9.5	8	17.3
ø25	62.5(84)	57.5(69)	12	8.5	19.3	69(84)	64(69)	12	8.5	18.4

● Rod end male thread

Code / Bore size (mm)	a'	c'	H	kk'	M	MM	T	wf *1
ø20	14	12	13	M8	8	10	5	4.5(14.5)
ø25	17.5	15	17	M10x1.25	10	12	6	5(15)

*1 : Dimensions in ( ) are for strokes of more than 25 mm.
*2 : Refer to pages 852 and 853 for switch mounting position.
*3 : For dimensions of individual accessories, refer to pages 1046 to 1049.

Dimensions with mounting bracket

● Axial foot (LB)
SSD2-Q(L)-20, 25 -LB

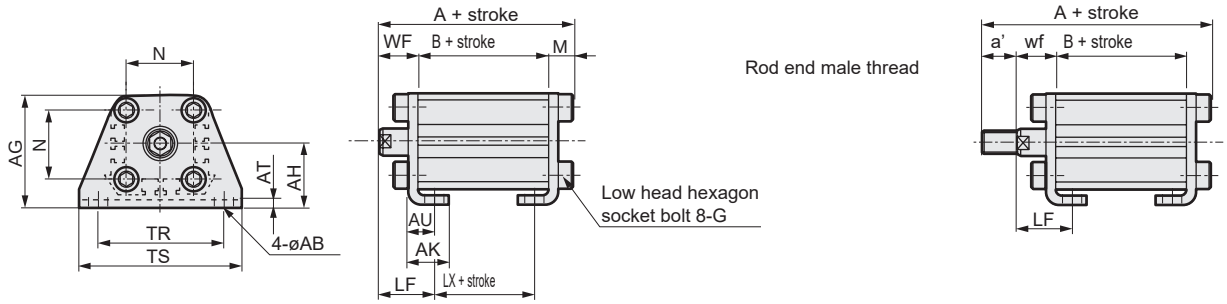

Code	Common dimensions						Female thread					SSD2-Q-R (female thread)				
Bore size (mm)	AB	AG	AH	AK	AT	AU	G	N	TR	TS	M	WF	LF	Without/with switch		
														A	B	LX
ø20	7	42	24	15	3.2	9.2	M6x16	25.5	48	62	7.2	14.5	20.5	76.2(87.7)	54.5(66)	42.5(54)
ø25	7	46	26	16.5	3.2	10.7	M6x16	28	52	66	7.2	15	22.5	79.7(91.2)	57.5(69)	42.5(54)

Code	SSD2-Q-R (male thread)						SSD2-Q-H (female thread)				
Bore size (mm)	a'	wf	LF	Without/with switch			WF	LF	Without/with switch		
				A	B	LX			A	B	LX
ø20	14	14.5	20.5	90.2(101.7)	54.5(66)	42.5(54)	14.5	20.5	82.7(87.7)	61(66)	49(54)
ø25	17.5	15	22.5	97.2(108.7)	57.5(69)	42.5(54)	15	22.5	86.2(91.2)	64(69)	49(54)

Code	SSD2-Q-H (male thread)					
Bore size (mm)	a'	wf	LF	Without/with switch		
				A	B	LX
ø20	14	14.5	20.5	96.7(101.7)	61(66)	49(54)
ø25	17.5	15	22.5	103.7(108.7)	64(69)	49(54)

* Dimensions in ( ) are for ø20 and ø25 with more than 25 mm stroke and ø80 and ø100 with more than 50 mm stroke.

● Clevis bracket (CB)
SSD2-Q(L)-20, 25 -CB

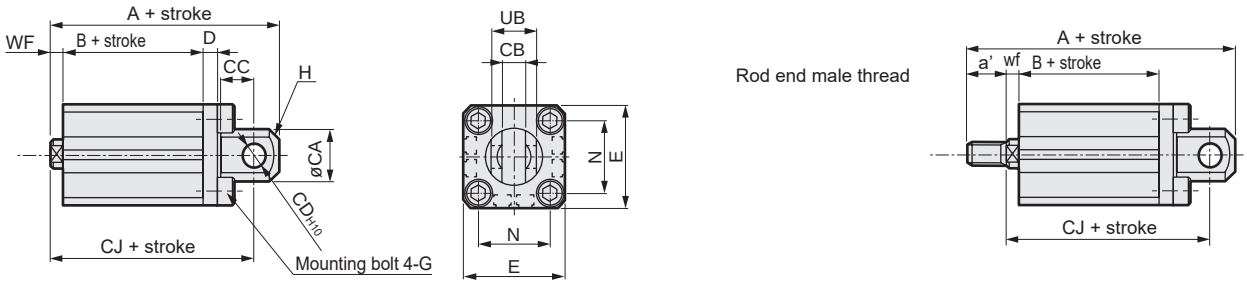

Code	Common dimensions										SSD2-Q-R (female thread)			
Bore size (mm)	CA	CB	CC	CD	D	E	G	H	N	UB	WF	A	B	CJ
ø20	20	8.2 $^{+0.2}_{0}$	12	8	5	36	M6x16	C4	25.5	16 $^{-0.1}_{-0.3}$	4.5(14.5)	86(107.5)	54.5(66)	77(98.5)
ø25	24	10.2 $^{+0.2}_{0}$	14	10	5	40	M6x16	C5	28	20 $^{-0.1}_{-0.3}$	5(15)	92.5(114)	57.5(69)	82.5(104)

Code	SSD2-Q-R (male thread)					SSD2-Q-H (female thread)			
Bore size (mm)	a'	wf	A	B	CJ	WF	A	B	CJ
ø20	14	4.5(14.5)	100(121.5)	54.5(66)	77(98.5)	4.5(14.5)	92.5(107.5)	61(66)	83.5(98.5)
ø25	17.5	5(15)	110(131.5)	57.5(69)	82.5(104)	5(15)	99(114)	64(69)	89(104)

Code	SSD2-Q-H (male thread)				
Bore size (mm)	a'	wf	A	B	CJ
ø20	14	4.5(14.5)	106.5(121.5)	61(66)	83.5(98.5)
ø25	17.5	5(15)	116.5(131.5)	64(69)	89(104)

*1: Dimensions in ( ) are for more than 25 mm stroke.

SCP*3
CMK2
CMA2
SCM
SCG
SCA2
SCS2
CKV2
CAV2/ COVP/N2
SSD2
SSG
SSD
CAT
MDC2
MVC
SMG
MSD/ MSDG
FC*
STK
SRL3
SRG3
SRM3
SRT3
MRL2
MRG2
SM-25
ShkAbs
FJ
FK
Spd Contr
Ending

Dimensions with mounting bracket

CAD

● Rod side flange (FA)
SSD2-Q(L)-20, 25 -FA

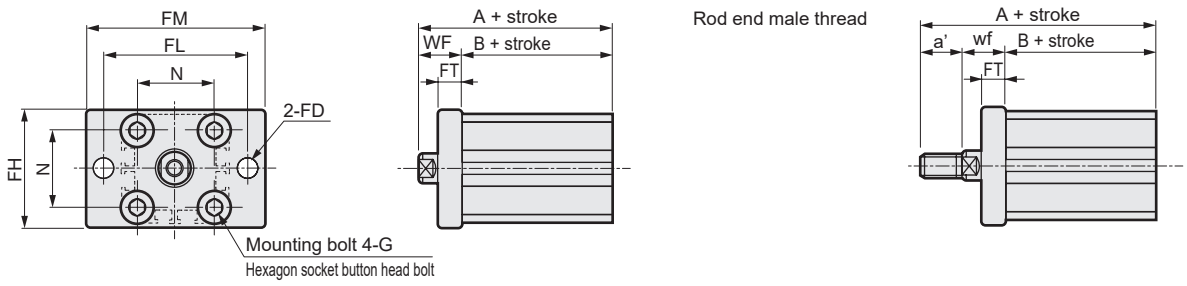

Code	Common dimensions							SSD2-Q-R (female thread)			SSD2-Q-R (male thread)			
Bore size (mm)	FD	FH	FL	FM	FT	N	G	WF	Without/with switch		a'	wf	Without/with switch	
									A	B			A	B
ø20	6.6	39	48	60	8	25.5	M6x16	14.5	69(80.5)	54.5(66)	14	14.5	83(94.5)	54.5(66)
ø25	6.6	42	52	64	8	28	M6x16	15	72.5(84)	57.5(69)	17.5	15	90(101.5)	57.5(69)

Code	SSD2-Q-H (female thread)			SSD2-Q-H (male thread)			
Bore size (mm)	WF	Without/with switch		a'	wf	Without/with switch	
		A	B			A	B
ø20	14.5	75.5(80.5)	61(66)	14	14.5	89.5(94.5)	61(66)
ø25	15	79(84)	64(69)	17.5	15	96.5(101.5)	64(69)

* Dimensions in ( ) are for ø20 and ø25 with more than 25 mm stroke and ø80 and ø100 with more than 50 mm stroke.

● Head side flange (FB)
SSD2-Q(L)-20, 25 -FB

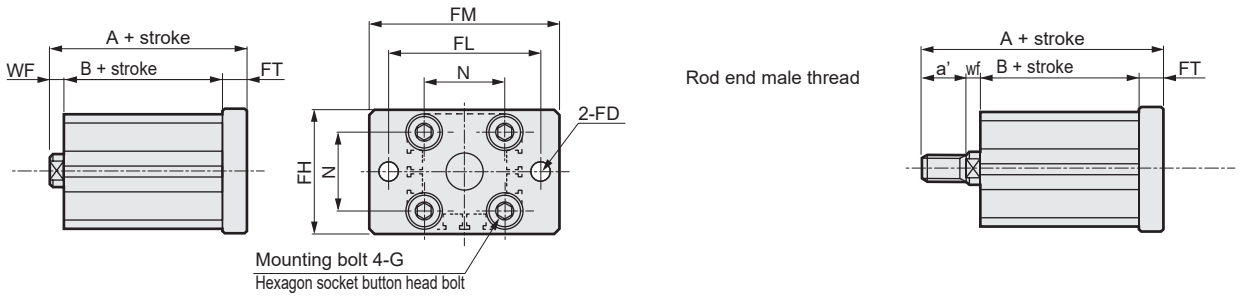

Code	Common dimensions							SSD2-Q-R (female thread)			SSD2-Q-R (male thread)			
Bore size (mm)	FD	FH	FL	FM	FT	N	G	WF	A	B	a'	wf	A	B
ø20	6.6	39	48	60	8	25.5	M6x16	4.5(14.5)	67(88.5)	54.5(66)	46	19.5(14.5)	71(92.5)	54.5(66)
ø25	6.6	42	52	64	8	28	M6x16	5(15)	70.5(92)	57.5(69)	53	22.5(15)	88(109.5)	57.5(69)

Code	SSD2-Q-H (female thread)			SSD2-Q-H (male thread)			
Bore size (mm)	WF	A	B	a'	wf	A	B
ø20	4.5(14.5)	73.5(88.5)	61(66)	46	19.5(14.5)	77.5(92.5)	61(66)
ø25	5(15)	77(92)	64(69)	53	22.5(15)	94.5(109.5)	64(69)

*1: Dimensions in ( ) are for more than 25 mm stroke.

Dimensions (ø32 to ø100)

● SSD2-Q(L)-32 to 100-R
* The dimensions are common for types with and without switches.

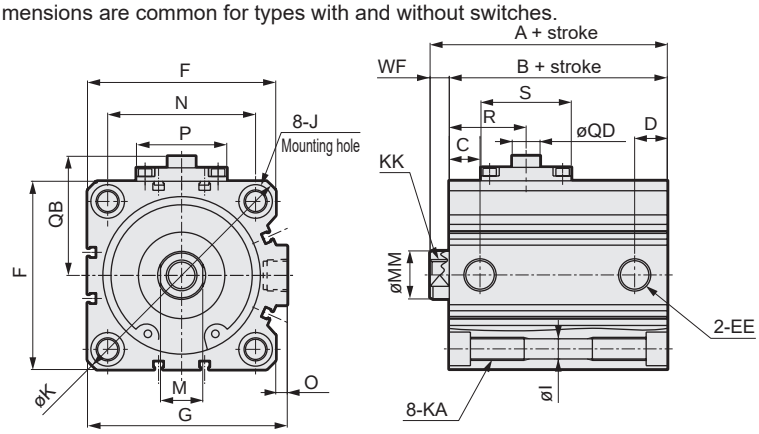

● Rod end male thread

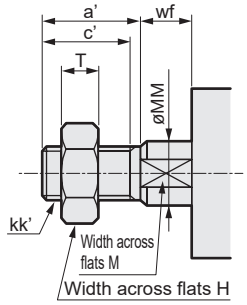

● SSD2-Q(L)-32 to 100-H
* The dimensions are common for types with and without switches.

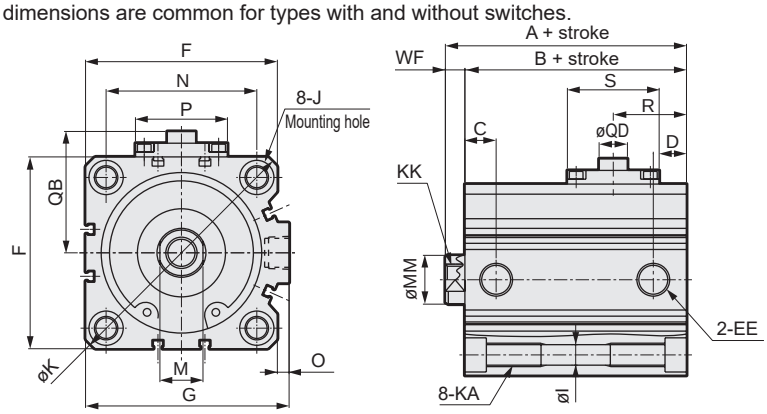

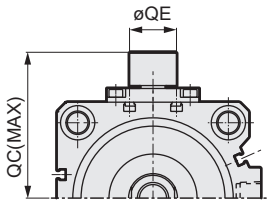

Code / Bore size (mm)	Common dimensions										
	EE	F	G	I	J	K	KA	KK	M	MM	N
ø32	Rc1/8	45	49.5	5.5	9 spot face depth 5.5	60	M6 depth 11	M8 depth 13	14	16	34
ø40	Rc1/8	52	57	5.5	9 spot face depth 5.5	69	M6 depth 11	M8 depth 13	14	16	40
ø50	Rc1/4	64	71	6.9	11 spot face depth 6.5	86	M8 depth 13	M10 depth 15	17	20	50
ø63	Rc1/4	77	84	8.7	14 spot face depth 9	103	M10 depth 25	M10 depth 15	17	20	60
ø80	Rc3/8	98	104	10.5	17.5 spot face depth 11	132	M12 depth 28	M16 depth 21	22	25	77
ø100	Rc3/8	117	123.5	10.5	17.5 spot face depth 11	156	M12 depth 28	M20 depth 27	27	30	94

Code / Bore size (mm)	Common dimensions							
	O	P	S	QB	QC	QD	QE	WF *1
ø32	4.5	22	30.5	33.5	46.3	10.5	13	7
ø40	5	22	30.5	37	49.8	10.5	13	7
ø50	7	40.5	23	44	56.3	10.5	13	8
ø63	7	40.5	23	50.5	62.8	10.5	13	8
ø80	6	47	47	62	77.5	14.5	24	10(20)
ø100	6.5	47	47	71.5	87	14.5	24	12(22)

Code / Bore size (mm)	With rod side position locking mechanism					With head side position locking mechanism				
	A *1	B *1	C	D	R	A *1	B *1	C	D	R
ø32	65	58	11	9	19.2	72.5	65.5	11	9	20.9
ø40	71.5	64.5	14	11	21.7	82	75	14	14	23.9
ø50	73.5	65.5	15	12.5	24.7	83.5	75.5	15	12.5	29.8
ø63	79	71	19	16	26.2	85	77	15	16	25.5
ø80	113.5(136)	103.5(116)	18	17	40	121(136)	111(116)	18	17	37.5
ø100	125(147.5)	113(125.5)	23	21	44.5	132.5(147.5)	120.5(125.5)	23	21	40

● Rod end male thread

Code / Bore size (mm)	a'	c'	H	kk'	M	MM	T	wf *1
ø32	23.5	20.5	22	M14x1.5	14	16	8	5
ø40	23.5	20.5	22	M14x1.5	14	16	8	5
ø50	28.5	26	27	M18x1.5	17	20	11	5
ø63	28.5	26	27	M18x1.5	17	20	11	5
ø80	35.5	32.5	32	M22x1.5	22	25	13	8(18)
ø100	35.5	32.5	41	M26x1.5	27	30	16	8(18)

*1 : Dimensions in ( ) are for strokes of more than 50 mm.
*2 : Refer to pages 852 and 853 for switch mounting position.
*3 : For dimensions of individual accessories, refer to pages 1046 to 1049.

SCP*3
CMK2
CMA2
SCM
SCG
SCA2
SCS2
CKV2
CAV2/ COVP/N2
SSD2
SSG
SSD
CAT
MDC2
MVC
SMG
MSD/ MSDG
FC*
STK
SRL3
SRG3
SRM3
SRT3
MRL2
MRG2
SM-25
ShkAbs
FJ
FK
Spd Contr
Ending

Dimensions with mounting bracket

● Axial foot (LB)
SSD2-Q(L)-32 to 100 -LB

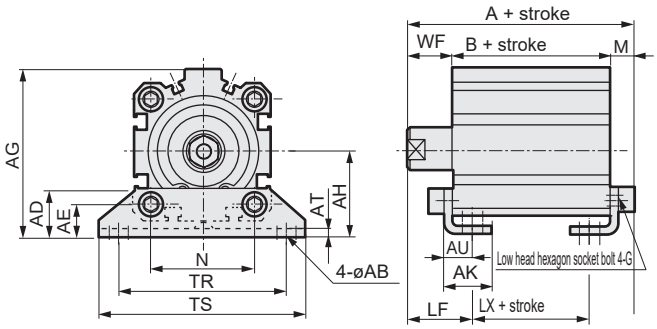

Rod end male thread

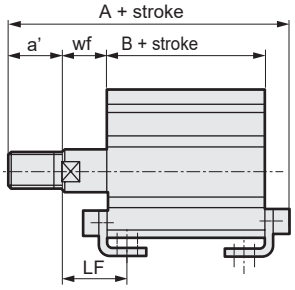

Code	Common dimensions						Female thread							SSD2-Q-R (female thread)				
Bore size (mm)	AB	AD	AE	AG	AH	AK	AT	AU	G	N	TR	TS	M	WF	LF	Without/with switch A	B	LX
ø32	7	18.5	13	57	30	17	3.2	11.2	M6x16	34	57	71	7.2	17	25	82.2	58	42
ø40	7	18	13	64	33	18.2	3.2	11.2	M6x16	40	64	78	7.2	17	25	88.7	64.5	48.5
ø50	9	22	14	78	39	22.7	3.2	14.7	M8x20	50	79	95	8.2	18	29.5	91.7	65.5	42.5
ø63	11	26	16	91.5	46	25.2	3.2	16.2	M10x25	60	95	113	9.2	18	31	98.2	71	45
ø80	13	31.5	20.5	114	59	30.5	4.5	19.5	M12x40	77	118	140	11.5	20	35	135(147.5)	103.5(116)	73.5(86)
ø100	13	35	24	136	71	35.5	6	23	M12x40	94	137	162	13	22	39	148(160.5)	113(125.5)	79(91.5)

Code	SSD2-Q-R (male thread)						SSD2-Q-H (female thread)					SSD2-Q-H (male thread)					
Bore size (mm)	a'	wf	LF	Without/with switch A	B	LX	WF	LF	Without/with switch A	B	LX	a'	wf	LF	Without/with switch A	B	LX
ø32	23.5	15	23	103.7	58	42	17	25	89.7	65.5	49.5	23.5	15	23	111.2	65.5	49.5
ø40	23.5	15	23	110.2	64.5	48.5	17	25	99.2	75	59	23.5	15	23	120.7	75	59
ø50	28.5	15	26.5	117.2	65.5	42.5	18	29.5	101.7	75.5	52.5	28.5	15	26.5	127.2	75.5	52.5
ø63	28.5	15	28	123.7	71	45	18	31	104.2	77	51	28.5	15	28	129.7	77	51
ø80	35.5	18	33	168.5(181)	103.5(116)	73.5(86)	20	35	142.5(147.5)	111(116)	81(86)	35.5	18	33	176(181)	111(116)	81(86)
ø100	35.5	18	35	179.5(192)	113(125.5)	79(91.5)	22	39	155.5(160.5)	120.5(125.5)	86.5(91.5)	35.5	18	35	187(192)	120.5(125.5)	86.5(91.5)

* Dimensions in ( ) are for ø20 and ø25 with more than 25 mm stroke and ø80 and ø100 with more than 50 mm stroke.

● Clevis bracket (CB)
SSD2-Q(L)-32 to 100 -CB

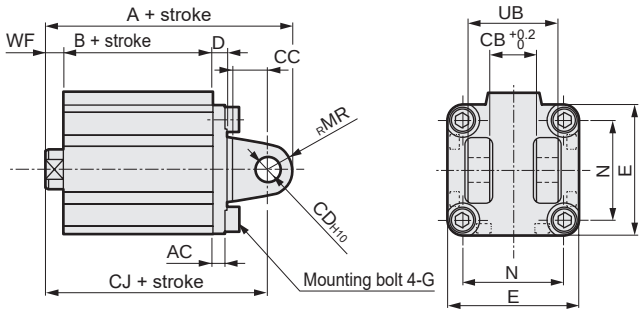

Rod end male thread

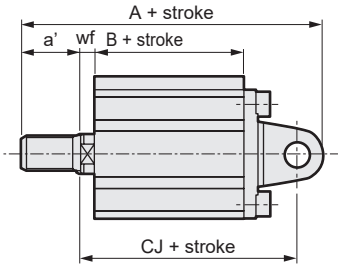

Code	Common dimensions										SSD2-Q-R (female thread)			
Bore size (mm)	AC	CB	CC	CD	D	E	G	MR	N	UB	WF	A	B	CJ
ø32	4.5	18.2	14	10	5	45	M6x16	10	34	36	7	95	58	85
ø40	5	18.2	14	10	6	52	M6x16	10	40	36	7	103.5	64.5	93.5
ø50	6	22.2	20	14	7	64	M8x20	14	50	44	8	115.5	65.5	101.5
ø63	7	22.2	20	14	8	77	M10x25	14	60	44	8	123	71	109
ø80	9	28.2	27	18	10	98	M12x40	18	77	56	10(20)	169.5(192)	103.5(116)	151.5(174)
ø100	12	32.2	31	22	13	117	M12x40	22	94	64	12(22)	192(214.5)	113(125.5)	170(192.5)

Code	SSD2-Q-R (male thread)					SSD2-Q-H (female thread)				SSD2-Q-H (male thread)				
Bore size (mm)	a'	wf	A	B	CJ	WF	A	B	CJ	a'	wf	A	B	CJ
ø32	23.5	5	116.5	58	83	7	102.5	65.5	92.5	23.5	5	124	65.5	90.5
ø40	23.5	5	125	64.5	91.5	7	114	75	104	23.5	5	135.5	74.5	102
ø50	28.5	5	141	65.5	98.5	8	125.5	75.5	111.5	28.5	5	151	71.5	108.5
ø63	28.5	5	148.5	71	106	8	129	77	115	28.5	5	154.5	77	112
ø80	35.5	8(18)	203(225.5)	103.5(116)	149.5(172)	10(20)	177(192)	111(116)	159(174)	35.5	8(18)	210.5(225.5)	111(116)	157(172)
ø100	35.5	8(18)	223.5(246)	113(125.5)	166(188.5)	12(22)	199.5(214.5)	120.5(125.5)	177.5(192.5)	35.5	8(18)	231(246)	120.5(125.5)	173.5(188.5)

*1: Dimensions in ( ) of ø80 and ø100 are for more than 50 mm stroke.

Dimensions with mounting bracket

CAD

● Rod side flange (FA)
SSD2-Q(L)-32 to 100 -FA

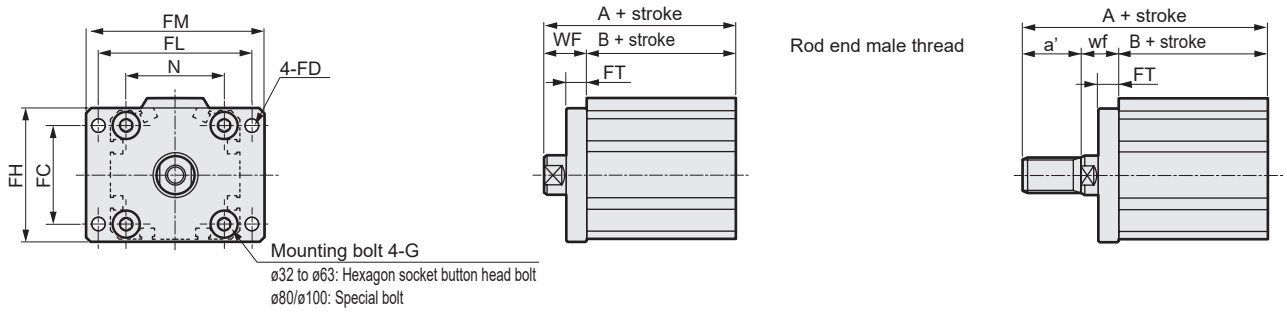

Code / Bore size (mm)	Common dimensions								SSD2-Q-R (female thread)			SSD2-Q-R (male thread)			
	FC	FD	FH	FL	FM	FT	N	G	WF	Without/with switch A	Without/with switch B	a'	wf	Without/with switch A	Without/with switch B
ø32	34	5.5	48	56	65	8	34	M6x16	17	75	58	23.5	15	96.5	58
ø40	40	5.5	54	62	72	8	40	M6x16	17	81.5	64.5	23.5	15	103	64.5
ø50	50	6.6	67	76	89	9	50	M8x20	18	83.5	65.5	28.5	15	109	65.5
ø63	60	9	80	92	108	9	60	M10x25	18	89	71	28.5	15	114.5	71
ø80	77	11	99	116	134	11	77	M12x40	20	123.5(136)	103.5(116)	35.5	18	157(169.5)	103.5(116)
ø100	94	11	117	136	154	11	94	M12x40	22	135(147.5)	113(125.5)	35.5	18	166.5(179)	113(125.5)

Code / Bore size (mm)	SSD2-Q-H (female thread)			SSD2-Q-H (male thread)			
	WF	Without/with switch A	Without/with switch B	a'	wf	Without/with switch A	Without/with switch B
ø32	17	82.5	65.5	23.5	15	104	65.5
ø40	17	92	75	23.5	15	113.5	75
ø50	18	93.5	75.5	28.5	15	119	75.5
ø63	18	95	77	28.5	15	120.5	77
ø80	20	131(136)	111(116)	35.5	18	164.5(169.5)	111(116)
ø100	22	142.5(147.5)	120.5(125.5)	35.5	18	174(179)	120.5(125.5)

* Dimensions in ( ) are for ø20 and ø25 with more than 25 mm stroke and ø80 and ø100 with more than 50 mm stroke.

● Head side flange (FB)
SSD2-Q(L)-32 to 100 -FB

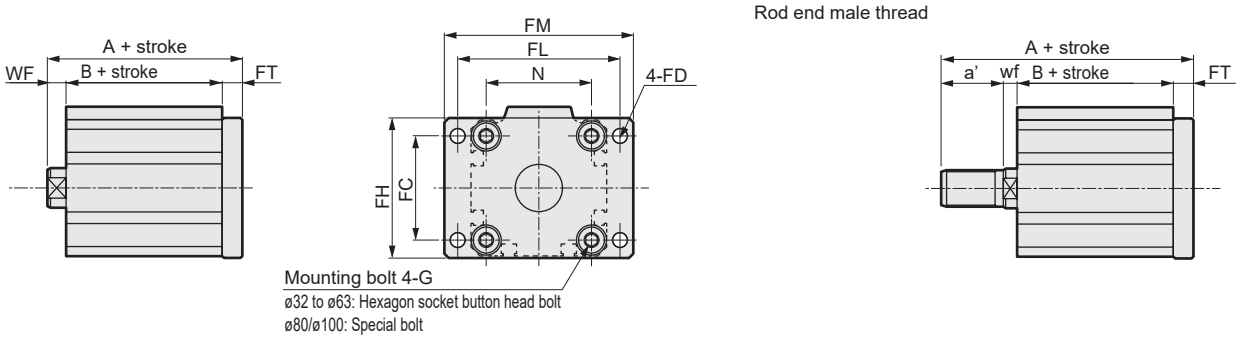

Code / Bore size (mm)	Common dimensions								SSD2-Q-R (female thread)			SSD2-Q-R (male thread)			
	FC	FD	FH	FL	FM	FT	N	G	WF	A	B	a'	wf	A	B
ø32	34	5.5	48	56	65	8	34	M6x16	7	73	58	59.5	23	94.5	58
ø40	40	5.5	54	62	72	8	40	M6x16	7	79.5	64.5	66	29.5	101	64.5
ø50	50	6.6	67	76	89	9	50	M8x20	8	82.5	65.5	73	30.5	108	65.5
ø63	60	9	80	92	108	9	60	M10x25	8	88	71	78.5	36	113.5	71
ø80	77	11	99	116	134	11	77	M12x40	10(20)	124.5(147)	103.5(116)	98	43.5(18)	158(180.5)	103.5(116)
ø100	94	11	117	136	154	11	94	M12x40	12(22)	136(158.5)	113(125.5)	107.5	53(18)	167.5(190)	113(125.5)

Code / Bore size (mm)	SSD2-Q-H (female thread)			SSD2-Q-H (male thread)			
	WF	A	B	a'	wf	A	B
ø32	7	80.5	65.5	59.5	23	102	65.5
ø40	7	90	75	66	29.5	111.5	74.5
ø50	8	92.5	75.5	73	30.5	118	71.5
ø63	8	94	77	78.5	36	119.5	77
ø80	10(20)	132(147)	111(116)	98	43.5(18)	165.5(180.5)	111(116)
ø100	12(22)	143.5(158.5)	120.5(125.5)	107.5	53(18)	175(190)	120.5(125.5)

*1: Dimensions in ( ) of ø80 and ø100 are for more than 50 mm stroke.

Dimensions (with the 1-color LED, 2-color LED, off-delay, strong magnetic field proof, T1* or T8* switch)

● SSD2-QL-20 to 25-R (with switch/rod side position locking)

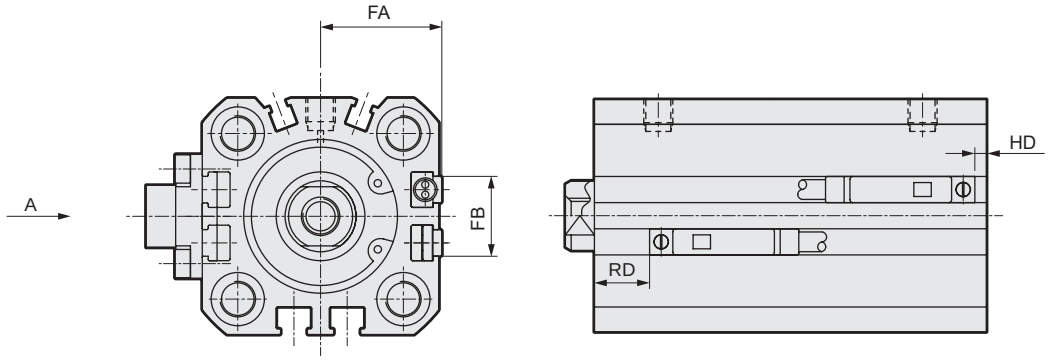

● SSD2-QL-32 to 100-R (with switch/rod side position locking)

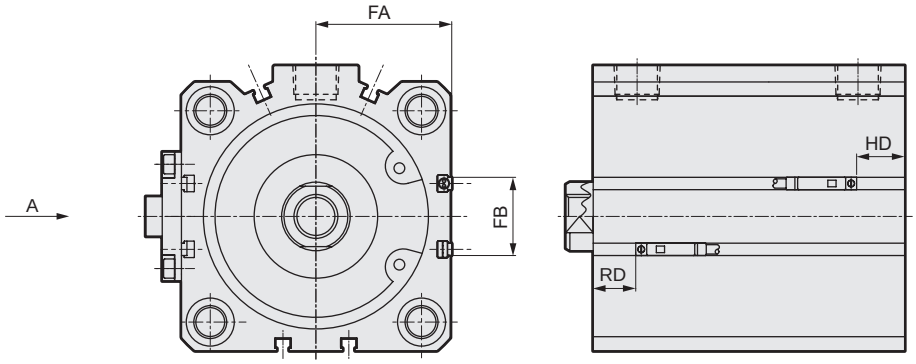

Code	Common dimensions		T0H/T0V, T5H/T5V				T2H/T2V, T3H/T3V				T2WH/T2WV, T3WH/T3WV				F2H/F2V, F3H/F3V, F2YH/F2YV, F3YH/F3YV			F2S/F3S		
Bore size (mm)	FA	FB	HD		RD		HD		RD		HD		RD		HD		RD	HD		RD
ø20	18.5	12.5	4		32	37	4		32	37	6		33.5	38.5	8.5		36	41	7.5		35	40
ø25	20.5	13.5	6.5		33.5	38.5	6.5		33.5	38.5	8.5		35	40	11		37.5	42.5	10		36.5	41.5
ø32	23	20.5	5.5		34		5.5		34		7.5		36									
ø40	26.5	27.5	8		38		8		38		10		39.5									
ø50	32.5	28.5	6.5		41		6.5		41		8.5		42.5									
ø63	39	28.5	10.5		42		10.5		42		12.5		44									
ø80	49.5	28.5	19	24	66	73.5	19	24	66	73.5	21	26	68	75.5								
ø100	59	28.5	24.5	29.5	70	77.5	24.5	29.5	70	77.5	26.5	31.5	72	79.5								

Code	T2YH/T2YV, T3YH/T3YV, T2JH/T2JV						T2YD, T2YDT, T1H/T1V						T8H/T8V *1					
Bore size (mm)	FA	FB	HD		RD		FA	FB	HD		RD		FA	FB	HD		RD	
ø20	24.3	16	3		30	35	29.3	16	3		30	35	24.3	16	0		25.5	30.5
ø25	26.3	17	5.5		32	37	31.3	17	5.5		32	37	26.3	17	0.5		27	32
ø32	28.8	24	4		32.5		33.8	24	4		32.5		28.8	24	0		28	
ø40	32.3	31	7		36.5		37.3	31	7		36.5		32.3	31	2		31.5	
ø50	38.3	32	5.5		39.5		43.3	32	5.5		39.5		38.3	32	0.5		34.5	
ø63	44.8	32	9		40.5		49.8	32	9		40.5		44.8	32	4		35.5	
ø80	55.3	32	17.5	22.5	64.5	72	60.3	32	17.5	22.5	64.5	72	55.3	32	12.5	17.5	60	67.5
ø100	64.8	32	23	28	68.5	76	69.8	32	23	28	68.5	76	64.8	32	18	23	64	71.5

*1: T8 switch cannot be mounted on side A (the side with position locking mechanism).
*2: Only F-switch is available for the ø20 or ø25 piping port surface.
*3: In fields with two values, the left value is for 25 mm stroke or less and the right for more than 25 mm stroke in ø20 and ø25, and the left for 50 mm stroke or less and the right for more than 50 mm stroke in ø80 and ø100.

Dimensions (with the 1-color LED, 2-color LED, off-delay, AC magnetic field proof, T1* or T8* switch)

● SSD2-QL-20 to 25-H (with switch/head side position locking)

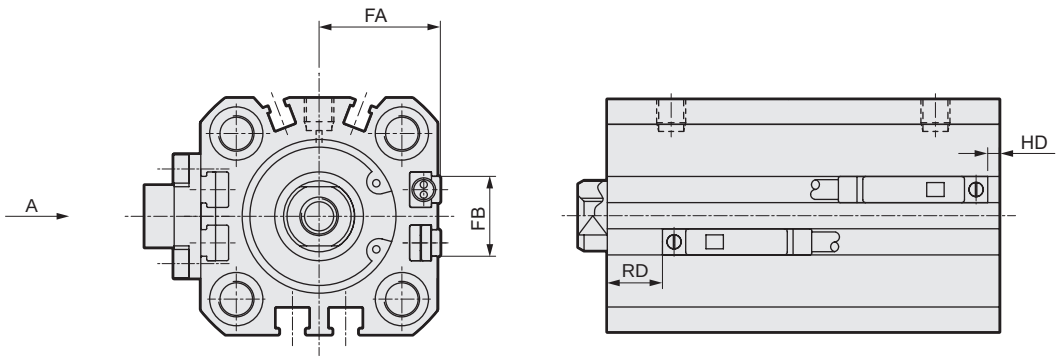

● SSD2-QL-32 to 100-H (with switch/head side position locking)

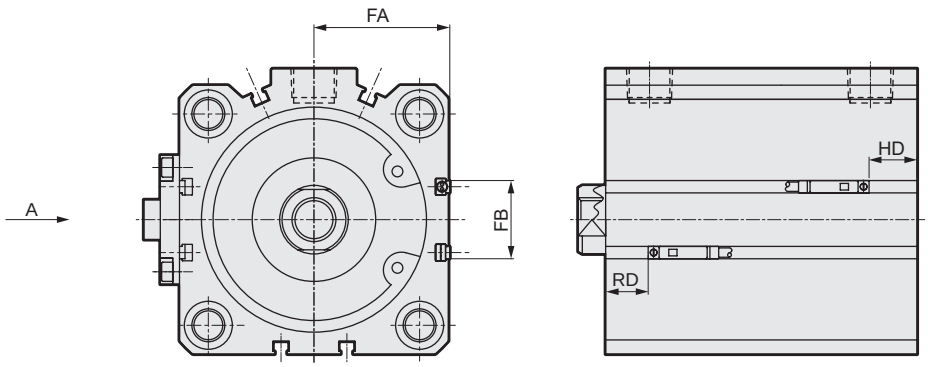

Code	Common dimensions		T0H/T0V, T5H/T5V			T2H/T2V, T3H/T3V			T2WH/T2WV, T3WH/T3WV			F2H/F2V, F3H/F3V, F2YH/F2YV, F3YH/F3YV			F2S/F3S		
Bore size (mm)	FA	FB	HD	RD		HD	RD		HD	RD		HD	RD		HD	RD	
ø20	18.5	12.5	34	8.5	13.5	34	8.5	13.5	35.5	10.5	15.5	38	13	18	37	12	17
ø25	20.5	13.5	35.5	10	15	35.5	10	15	37.5	12	17	40	14	19	39	13	18
ø32	23	20.5	38	9		38	9		40	11							
ø40	26.5	27.5	46	10.5		46	10.5		48	12							
ø50	32.5	28.5	46	11		46	11		48	12.5							
ø63	39	28.5	46.5	12		46.5	12		48.5	14							
ø80	49.5	28.5	78	14.5	19.5	78	14.5	19.5	80	16	21						
ø100	59	28.5	84.5	28	33	84.5	28	33	86.5	29.5	34.5						

Code	T2YH/T2YV, T3YH/T3YV, T2JH/T2JV					T2YD, T2YDT, T1H/T1V					T8H/T8V *1				
Bore size (mm)	FA	FB	HD	RD		FA	FB	HD	RD		FA	FB	HD	RD	
ø20	24.3	16	32.5	7.5	12.5	29.3	16	32.5	7.5	12.5	24.3	16	27.5	2.5	7.5
ø25	26.3	17	34	8.5	13.5	31.3	17	34	8.5	13.5	26.3	17	29.5	3.5	8.5
ø32	28.8	24	36.5	7.5		33.8	24	36.5	7.5		28.8	24	32	2.5	
ø40	32.3	31	44.5	9		37.3	31	44.5	9		32.3	31	40	4	
ø50	38.3	32	45	9		43.3	32	45	9		38.3	32	40	4.5	
ø63	44.8	32	45	10.5		49.8	32	45	10.5		44.8	32	40	5.5	
ø80	55.3	32	76.5	13	18	60.3	32	76.5	13	18	55.3	32	72	8	13
ø100	64.8	32	83	26	31	69.8	32	83	26	31	64.8	32	78	21	26

*1: T8 switch cannot be mounted on side A (the side with position locking mechanism).
*2: Only F-switch is available for the ø20 or ø25 piping port surface.
*3: In fields with two values, the left value is for 25 mm stroke or less and the right for more than 25 mm stroke in ø20 and ø25, and the left for 50 mm stroke or less and the right for more than 50 mm stroke in ø80 and ø100.

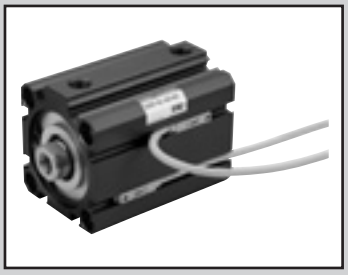

Compact cylinder double acting/fine speed

SSD2-F/SSD2-KF Series

● Bore size: ø12/ø16/ø20/ø25/ø32/ø40/ø50/ø63/ø80/ø100

JIS symbol 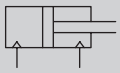

RoHS CAD

Specifications

1 MPa = 10 bar

Item	SSD2-F SSD2-LF (with switch)										SSD2-KF SSD2-KLF (with switch)									
Bore size mm	ø12	ø16	ø20	ø25	ø32	ø40	ø50	ø63	ø80	ø100	ø12	ø16	ø20	ø25	ø32	ø40	ø50	ø63	ø80	ø100
Actuation	Double acting																			
Working fluid	Compressed air																			
Max. working pressure MPa	1.0 (≈150 psi, 10 bar)																			
Min. working pressure MPa	0.1 (≈15 psi, 1 bar)							0.05 (≈7.3 psi)			0.1 (≈15 psi, 1 bar)							0.05 (≈7.3 psi)		
Proof pressure MPa	1.6 (≈230 psi, 16 bar)																			
Ambient temperature °C	5 (41°F) to 60 (140°F)																			
Port size	M5				Rc1/8 *1		Rc1/4		Rc3/8		M5				Rc1/8		Rc1/4		Rc3/8	
Stroke tolerance mm	$^{+1.0}_{0}$										$^{+2.0}_{0}$									
Working piston speed mm/s	1 to 200																			
Cushion	None										Rubber cushion									
Lubrication	Not available																			
Allowable absorbed energy J	0.004	0.01	0.016	0.021	0.025	0.092	0.1	0.12	0.27	0.56	0.04	0.09	0.16	0.16	0.40	0.63	0.98	1.56	2.51	3.92

*1: The ø32 bore size with a 5 mm stroke and without a switch has a port size of M5.

Stroke

Bore size (mm)	Standard stroke (mm)	Max. stroke (mm)	Min. stroke (mm)
ø12	5/10/15/20 25/30	30	1
ø16			
ø20	5/10/15/20/25 30/35/40/45/50	50	
ø25			
ø32	5/10/15/20/25/30/ 35/40/45/50/75/100	100	
ø40			
ø50	10/15/20/25 30/35/40/45/50 75/100		
ø63			
ø80			
ø100			

*1 : When using the type with switch, refer to the table of the min. stroke with switch.
*2: Refer to pages 763 and 765 (F and LF) or page 789 (KF) for the min. stroke with mounting bracket LB.

Min. stroke with switch (2 switches)

Bore size (mm)	T0H/V / T5H/V	T2H/V / T3H/V
ø12	10(5)	5
ø16		
ø20	5	
ø25		
ø32		
ø40		
ø50		
ø63		
ø80		
ø100		

1: Less than 10 mm with the 2-color LED, off-delay, AC magnetic field proof, T1 or T8* switch is not available.
*2: Values in ( ) are for the type with 1 on rod side.

Custom stroke

● SSD2-F Series

Item	Standard products	
	Standard stroke body with spacer	
Model No.	Refer to How to order.	
Description	A spacer is added to the standard stroke body to adjust the stroke in 1 mm increments.	
Stroke range	Bore size	Stroke range
	12/16	1 to 29
	20 to 25	1 to 49
	32 to 100	1 to 99
Example of model No.	Model No.: SSD2-F-32-38 A +2 mm spacer is added to the SSD2-F-32-40 standard cylinder to create 38 mm stroke. B + stroke is 63 mm.	

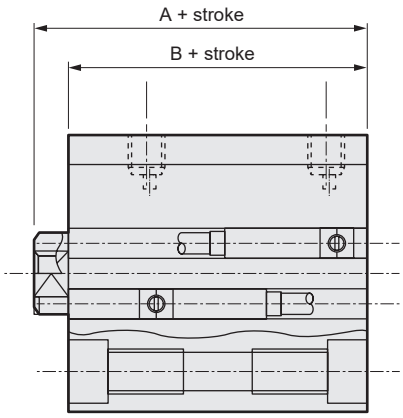

Switch specifications (F-switch)

● 1-color/2-color LED

Item	2-wire proximity	3-wire proximity	2-wire proximity		3-wire proximity		
	F2S	F3S	F2H/F2V	F2YH/F2YV	F3H/F3V	F3PH/F3PV (made to order)	F3YH/F3YV
Applications	Dedicated for programmable controller	For programmable controller, relay	Dedicated for programmable controller		For programmable controller, relay		
Output method	-	NPN output	-		NPN output	PNP output	NPN output
Power supply voltage	-	10 to 28 VDC	-		10 to 28 VDC	4.5 to 28 VDC	10 to 28 VDC
Load voltage	10 to 30 VDC	30 VDC or less	10 to 30 VDC	24 VDC ±10%	30 VDC or less		
Load current	5 to 20 mA	50 mA or less	5 to 20 mA		50 mA or less		
Indicator	LED (Lit when ON)		Yellow LED (Lit when ON)	Red/green LED (Lit when ON)	Yellow LED (Lit when ON)		Red/green LED (Lit when ON)
Leakage current	1 mA or less	10 μA or less	1 mA or less		10 μA or less		
Weight g	1 m:10 3 m:29						

Switch specifications (T-switch)

● 1-color/2-color LED/for AC magnetic field proof

Item	2-wire proximity	2-wire proximity			3-wire proximity				2-wire reed							2-wire proximity
	T1H/T1V	T2H/T2V/T2JH/T2JV	T2YH/T2YV	T2WH/T2WV	T3H/T3V	T3PH/T3PV	T3YH/T3YV	T3WH/T3WV	T0H/T0V		T5H/T5V		T8H/T8V			T2YD(*4) T2YDT
Applications	For programmable controller, relay, compact solenoid valve	Dedicated for programmable controller			For programmable controller, relay				For programmable controller, relay		For programmable controller, relay, IC circuit (no indicator lamp), serial connection		For programmable controller, relay			For programmable controller
Output method	-				NPN output	PNP output	NPN output	NPN output	-							
Pwr. supp. V.	-				10 to 28 VDC				-							
Load voltage	85 to 265 VAC	10 to 30 VDC		24 VDC ±10%	30 VDC or less				12/24 VDC	100/110 VAC	5/12/24 VDC	100/110 VAC	12/24 VDC	110 VAC	220 VAC	24 VDC ±10%
Load current	5 to 100 mA	5 to 20 mA (*3)			100 mA or less		50 mA or less		5 to 50 mA	7 to 20 mA	50 mA or less	20 mA or less	5 to 50 mA	7 to 20 mA	7 to 10 mA	5 to 20 mA
Indicator	LED (Lit when ON)	LED (Lit when ON)	Red/green LED (Lit when ON)	Red/green LED (Lit when ON)	LED (Lit when ON)	Yellow LED (Lit when ON)	Red/green LED (Lit when ON)	Red/green LED (Lit when ON)	LED (Lit when ON)		No indicator lamp		LED (Lit when ON)			Red/green LED (Lit when ON)
Leakage current	≤ 1 mA at 100 VAC, ≤ 2 mA at 200 VAC	1 mA or less			10 μA or less				0 mA							1 mA or less
Weight g	1 m:33 3 m:87 5 m:142	1 m:18 3 m:49 5 m:80	1 m:33 3 m:87 5 m:142	1 m:18 3 m:49 5 m:80	1 m:18 3 m:49 5 m:80		1 m:33 3 m:87 5 m:142	1 m:18 3 m:49 5 m:80	1 m:18 3 m:49 5 m:80				1 m:33 3 m:87 5 m:142			1 m:61 3 m:166 5 m:272

*1 : Refer to Ending Page 1 for detailed switch specifications and dimensions.
*2 : Switches other than the above models, such as switches with connectors, are also available. Refer to Ending Page 1.
*3 : The max. load current is 20 mA at 25°C. The current is lower than 20 mA if the operating ambient temperature around the switch is higher than 25˚C. (5 to 10 mA at 60°C)
*4 : Switch for AC magnetic field (T2YD/T2YDT) cannot be used in DC magnetic field.
*5 : The F-switch uses a bend-resistant lead wire.

Theoretical thrust table

(Unit: N)

Bore size (mm)	Operating direction	Working pressure MPa											
		0.05	0.1	0.15	0.2	0.3	0.4	0.5	0.6	0.7	0.8	0.9	1.0
ø12	Push	-	11.3	17.0	22.6	33.9	45.2	56.5	67.9	79.2	90.5	$1.02x10^2$	$1.13x10^2$
	Pull	-	8.48	12.7	17.0	25.4	33.9	42.4	50.9	59.4	67.9	76.3	84.8
ø16	Push	-	20.1	30.2	40.2	60.3	80.4	$1.01x10^2$	$1.21x10^2$	$1.41x10^2$	$1.61x10^2$	$1.81x10^2$	$2.01x10^2$
	Pull	-	15.1	22.6	30.2	45.2	60.3	75.4	90.5	$1.06x10^2$	$1.21x10^2$	$1.36x10^2$	$1.51x10^2$
ø20	Push	-	31.4	47.1	62.8	94.2	$1.26x10^2$	$1.57x10^2$	$1.88x10^2$	$2.20x10^2$	$2.51x10^2$	$2.83x10^2$	$3.14x10^2$
	Pull	-	23.6	35.3	47.1	70.7	94.2	$1.18x10^2$	$1.41x10^2$	$1.65x10^2$	$1.88x10^2$	$2.12x10^2$	$2.36x10^2$
ø25	Push	-	49.1	73.6	98.2	$1.47x10^2$	$1.96x10^2$	$2.45x10^2$	$2.95x10^2$	$3.44x10^2$	$3.93x10^2$	$4.42x10^2$	$4.91x10^2$
	Pull	-	37.8	56.7	75.6	$1.13x10^2$	$1.51x10^2$	$1.89x10^2$	$2.27x10^2$	$2.64x10^2$	$3.02x10^2$	$3.40x10^2$	$3.78x10^2$
ø32	Push	-	80.4	$1.21x10^2$	$1.61x10^2$	$2.41x10^2$	$3.22x10^2$	$4.02x10^2$	$4.83x10^2$	$5.63x10^2$	$6.43x10^2$	$7.24x10^2$	$8.04x10^2$
	Pull	-	60.3	90.5	$1.21x10^2$	$1.81x10^2$	$2.41x10^2$	$3.02x10^2$	$3.62x10^2$	$4.22x10^2$	$4.83x10^2$	$5.43x10^2$	$6.03x10^2$
ø40	Push	-	$1.26x10^2$	$1.88x10^2$	$2.51x10^2$	$3.77x10^2$	$5.03x10^2$	$6.28x10^2$	$7.54x10^2$	$8.80x10^2$	$1.01x10^3$	$1.13x10^3$	$1.26x10^3$
	Pull	-	$1.06x10^2$	$1.58x10^2$	$2.11x10^2$	$3.17x10^2$	$4.22x10^2$	$5.28x10^2$	$6.33x10^2$	$7.39x10^2$	$8.44x10^2$	$9.50x10^2$	$1.06x10^3$
ø50	Push	-	$1.96x10^2$	$2.95x10^2$	$3.93x10^2$	$5.89x10^2$	$7.85x10^2$	$9.82x10^2$	$1.18x10^3$	$1.37x10^3$	$1.57x10^3$	$1.77x10^3$	$1.96x10^3$
	Pull	-	$1.65x10^2$	$2.47x10^2$	$3.30x10^2$	$4.95x10^2$	$6.60x10^2$	$8.25x10^2$	$9.90x10^2$	$1.15x10^3$	$1.32x10^3$	$1.48x10^3$	$1.65x10^3$
ø63	Push	$1.56x10^2$	$3.12x10^2$	$4.68x10^2$	$6.23x10^2$	$9.35x10^2$	$1.25x10^3$	$1.56x10^3$	$1.87x10^3$	$2.18x10^3$	$2.49x10^3$	$2.81x10^3$	$3.12x10^3$
	Pull	$1.40x10^2$	$2.80x10^2$	$4.20x10^2$	$5.61x10^2$	$8.41x10^2$	$1.12x10^3$	$1.40x10^3$	$1.68x10^3$	$1.96x10^3$	$2.24x10^3$	$2.52x10^3$	$2.80x10^3$
ø80	Push	$2.51x10^2$	$5.03x10^2$	$7.54x10^2$	$1.01x10^3$	$1.51x10^3$	$2.01x10^3$	$2.51x10^3$	$3.02x10^3$	$3.52x10^3$	$4.02x10^3$	$4.52x10^3$	$5.03x10^3$
	Pull	$2.27x10^2$	$4.54x10^2$	$6.80x10^2$	$9.07x10^2$	$1.36x10^3$	$1.81x10^3$	$2.27x10^3$	$2.72x10^3$	$3.17x10^3$	$3.63x10^3$	$4.08x10^3$	$4.54x10^3$
ø100	Push	$3.93x10^2$	$7.85x10^2$	$1.18x10^3$	$1.57x10^3$	$2.36x10^3$	$3.14x10^3$	$3.93x10^3$	$4.71x10^3$	$5.50x10^3$	$6.28x10^3$	$7.07x10^3$	$7.85x10^3$
	Pull	$3.57x10^2$	$7.15x10^2$	$1.07x10^3$	$1.43x10^3$	$2.14x10^3$	$2.86x10^3$	$3.57x10^3$	$4.29x10^3$	$5.00x10^3$	$5.72x10^3$	$6.43x10^3$	$7.15x10^3$

Dimensions

Same as SSD2 Series (double acting/single rod) and SSD2-K Series (double acting/high load).
Refer to pages 760 to 766 and 782 to 790.

How to order

No switch (without magnet for switch)

SSD2-F - 12 ◯ - 5 ———— N - LB - I

With switch (built-in magnet for switch)

SSD2-LF - 12 ◯ - 10 - T0H - R - N - LB - I

- Ⓐ Model No.
- Ⓑ Bore size
- Ⓒ Port thread
- Ⓓ Stroke
- Ⓔ Switch model No. *1 *2 *3 *8 *10
- Ⓕ Switch quantity
- Ⓖ Option *4
- Ⓗ Mounting bracket *5 *6
- Ⓘ Accessory *7

Precautions for model No. selection

1 : The T2YD switch cannot be mounted on the ø12 and ø16 bore sizes.
2 : The T8 switch cannot be mounted on the ø12 to ø32 bore sizes.
*3 : The F-switch can only be mounted on the piping port surface of bore sizes ø20 and ø25.
*4 : Piston rod of ø12 to ø25 is stainless steel as standard. C-snap ring is stainless steel instead of steel. The rod end male thread nut is stainless steel.
*5 : The mounting bracket is included at shipment.
*6 : The projection dimension of piston rod WF when LB or FA is selected is different from that of the standard. Refer to the dimensions on pages 761, 763, 765 and 766. The number of the specified protruding dimension will be added at the end of the model No. printed on the metal plate on the body.
*7 : "I" and "Y" cannot be selected together.
*8 : The F-switch with L lead wire on ø20 models cannot be selected on strokes of 15 mm or under.
*9 : Refer to pages 750 and 751 for combinations of variations/options.
*10 : Switches are shipped with the product. Contact CKD if assembling before shipment is necessary.
*11 : F-switch cannot be selected.

[Example of model No.]

SSD2-LF-12-10-T0H-R-N-LB-I

Model: Compact cylinder, fine speed

- Ⓑ Bore size : ø12 mm
- Ⓒ Port thread : Rc thread
- Ⓓ Stroke : 10mm
- Ⓔ Switch model No. : Reed switch T0H, lead wire length 1 m
- Ⓕ Switch quantity : 1 on rod side
- Ⓖ Option : Rod end male thread
- Ⓗ Mounting bracket : Axial foot
- Ⓘ Accessory : Rod eye

Code	Description
Ⓐ Model No.	
SSD2-F	Double acting/single rod
SSD2-LF	Double acting/single rod/with switch
SSD2-KF	Double acting/high load
SSD2-KLF	Double acting/high load/with switch
Ⓑ Bore size (mm)	
12	ø12
16	ø16
20	ø20
25	ø25
32	ø32
40	ø40
50	ø50
63	ø63
80	ø80
100	ø100
Ⓒ Port thread	
Blank	Rc thread
NN	NPT thread (ø32 and over) (made-to-order product)
GN	G thread (ø32 and over) (made-to-order product)
Ⓓ Stroke (mm)	
Refer to the stroke table on the following page.	

Ⓔ Switch model No.

Lead wire Straight	Lead wire L-shaped	Contact	Voltage AC	Voltage DC	Indicator	Lead wire	Bore size 12	16	20	25	32	40	50	63	80	100
-	F2S*	Proximity		●	1-color LED	2-wire			●	●						
-	F3S*	Proximity		●	1-color LED	3-wire			●	●						
F2H*	F2V*	Proximity		●	1-color LED	2-wire			●	●						
F3H*	F3V*	Proximity		●	1-color LED	3-wire			●	●						
F3PH*	F3PV*	Proximity		●	1-color LED (PNP output) (custom)	3-wire			●	●						
F2YH*	F2YV*	Proximity		●	2-color LED	2-wire			●	●						
F3YH*	F3YV*	Proximity		●	2-color LED	3-wire			●	●						
T0H*	T0V*	Reed	●	●	1-color LED	2-wire	●	●	●	●	●	●	●	●	●	●
T5H*	T5V*	Reed	●	●	No indicator lamp	2-wire	●	●	●	●	●	●	●	●	●	●
T8H*	T8V*	Reed	●	●	1-color LED	2-wire						●	●	●	●	●
T1H*	T1V*	Proximity	●		1-color LED	2-wire			●	●	●	●	●	●	●	●
T2H*	T2V*	Proximity		●	1-color LED	2-wire	●	●	●	●	●	●	●	●	●	●
T3H*	T3V*	Proximity		●	1-color LED	3-wire	●	●	●	●	●	●	●	●	●	●
T3PH*	T3PV*	Proximity		●	1-color LED (PNP output)	3-wire	●	●	●	●	●	●	●	●	●	●
T2WH*	T2WV*	Proximity		●	2-color LED	2-wire	●	●	●	●	●	●	●	●	●	●
T2YH*	T2YV*	Proximity		●	2-color LED	2-wire			●	●	●	●	●	●	●	●
T3WH*	T3WV*	Proximity		●	2-color LED	3-wire	●	●	●	●	●	●	●	●	●	●
T3YH*	T3YV*	Proximity		●	2-color LED	3-wire			●	●	●	●	●	●	●	●
T2YD*	-	Proximity		●	2-color LED for AC magnetic field	2-wire			●	●	●	●	●	●	●	●
T2YDT*	-	Proximity		●	2-color LED for AC magnetic field	2-wire			●	●	●	●	●	●	●	●
T2JH*	T2JV*	Proximity		●	1-color LED off-delay	2-wire			●	●	●	●	●	●	●	●

* Lead wire length	
Blank	1 m (standard)
3	3 m (option)
5	5 m (option) *11
Ⓕ Switch quantity	
R	1 on rod side
H	1 on head side
D	2
Ⓖ Option	
Blank	Rod end female thread
N	Rod end male thread
M *4	Piston rod material (stainless steel)
Ⓗ Mounting bracket	
Blank	Without mounting bracket
LB	Axial foot
CB	Clevis bracket (pin and snap ring included)
FA	Rod side flange
FB	Head side flange
Ⓘ Accessory (available when rod end male thread "N" is selected)	
I	Rod eye
Y	Rod clevis (pin and snap ring included)

[Stroke table]

● SSD2-F/SSD2-KF

Stroke (mm)		Applicable bore size									
		12	16	20	25	32	40	50	63	80	100
Standard stroke	5	●	●	●	●	●	●				
	10	●	●	●	●	●	●	●	●	●	●
	15	●	●	●	●	●	●	●	●	●	●
	20	●	●	●	●	●	●	●	●	●	●
	25	●	●	●	●	●	●	●	●	●	●
	30	●	●	●	●	●	●	●	●	●	●
	35			●	●	●	●	●	●	●	●
	40			●	●	●	●	●	●	●	●
	45			●	●	●	●	●	●	●	●
	50			●	●	●	●	●	●	●	●
	75					●	●	●	●	●	●
	100					●	●	●	●	●	●
Min. stroke (mm) *1		1									
Max. stroke (mm)		30		50		100					
Custom stroke *2		In 1 mm increments									

1 : Less than 5 mm for 1-color LED switch and less than 10 mm for the 2-color LED, off-delay, AC magnetic field proof, T1 or T8* switch are not available.
Refer to page 854 for the min. stroke with switch.
*2 : The total length when using a custom stroke is the same as that when using the next longer standard stroke.
*3 : Refer to pages 763 and 765 (F and LF) or page 789 (KF) for the min. stroke with mounting bracket LB.

How to order switch

SW - T0H

Switch model No.
(Item Ⓔ on page 856)

How to order mounting bracket

Bore size (mm) / Mounting bracket	ø12	ø16	ø20	ø25	ø32	ø40	ø50
Foot (LB)	SSD2-LB-12	SSD2-LB-16	SSD2-LB-20	SSD2-LB-25	SSD2-LB-32	SSD2-LB-40	SSD2-LB-50
Flange (FA/FB)	SSD2-FA-12	SSD2-FA-16	SSD2-FA-20	SSD2-FA-25	SSD2-FA-32	SSD2-FA-40	SSD2-FA-50
Clevis bracket (CB)	SSD2-CB-12	SSD2-CB-16	SSD2-CB-20	SSD2-CB-25	SSD2-CB-32	SSD2-CB-40	SSD2-CB-50

Bore size (mm) / Mounting bracket	ø63	ø80	ø100
Foot (LB)	SSD2-LB-63	SSD2-LB-80	SSD2-LB-100
Flange (FA/FB)	SSD2-FA-63	SSD2-FA-80	SSD2-FA-100
Clevis bracket (CB)	SSD2-CB-63	SSD2-CB-80	SSD2-CB-100

*1: The foot mounting bracket is provided as 2 pcs./set.

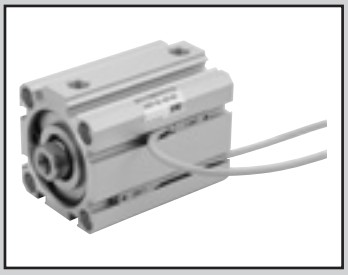

Compact cylinder double acting/low speed

SSD2-O Series

● Bore size: ø12/ø16/ø20/ø25/ø32/ø40/ø50/ø63/ø80/ø100

JIS symbol 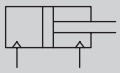

RoHS CAD

Specifications

Item	SSD2-O SSD2-OL (with switch)									
Bore size mm	ø12	ø16	ø20	ø25	ø32	ø40	ø50	ø63	ø80	ø100
Actuation	Double acting									
Working fluid	Compressed air									
Max. working pressure MPa	1.0 (≈150 psi, 10 bar)									
Min. working pressure MPa	0.1 (≈15 psi, 1 bar)							0.05 (≈7.3 psi, 0.5 bar)		
Proof pressure MPa	1.6 (≈230 psi, 16 bar)									
Ambient temperature °C	-10 (14°F) to 60 (140°F) (no freezing)									
Port size	M5				Rc1/8 *1		Rc1/4		Rc3/8	
Stroke tolerance mm	$^{+1.0}_{0}$									
Working piston speed mm/s	10 to 200									
Cushion	None									
Lubrication	Not available									
Allowable absorbed energy J	0.004	0.01	0.016	0.021	0.025	0.092	0.1	0.12	0.27	0.56

*1: The ø32 bore size with a 5 mm stroke and without a switch has a port size of M5.

Stroke

Bore size (mm)	Standard stroke (mm)	Max. stroke (mm)	Min. stroke (mm)
ø12	5/10/15/20 25/30	30	1
ø16			
ø20	5/10/15/20/25 30/35/40/45/50	50	
ø25			
ø32	5/10/15/20/25/30/ 35/40/45/50/75/100	100	
ø40			
ø50	10/15/20/25 30/35/40/45/50 75/100		
ø63			
ø80			
ø100			

*1 : When using the type with switch, refer to the table of the min. stroke with switch.
*2: Refer to pages 763 and 765 for the min. stroke with mounting bracket LB.

Min. stroke with switch (2 switches)

Bore size (mm)	T0H/V / T5H/V	T2H/V / T3H/V
ø12	10(5)	5
ø16		
ø20	5	
ø25		
ø32		
ø40		
ø50		
ø63		
ø80		
ø100		

1: Less than 10 mm with the 2-color LED, off-delay, AC magnetic field proof, T1 or T8* switch is not available.
*2: Values in ( ) are for the type with 1 on rod side.

Custom stroke

● SSD2-O Series

Item	Standard products Standard stroke body with spacer	
Model No.	Refer to How to order.	
Description	A spacer is added to the standard stroke body to adjust the stroke in 1 mm increments.	
Stroke range	Bore size	Stroke range
	12/16	1 to 29
	20 to 25	1 to 49
	32 to 100	1 to 99
Example of model No.	Model No.: SSD2-O-32-38 A +2 mm spacer is added to the SSD2-O-32-40 standard cylinder to create 38 mm stroke. B + stroke is 63mm.	

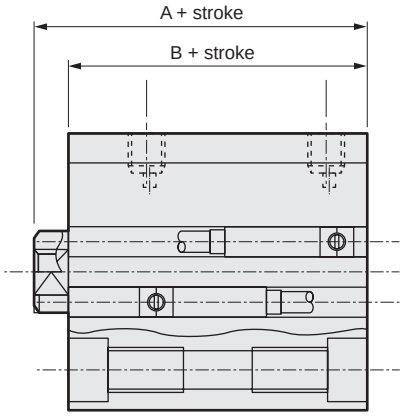

Switch specifications (F-switch)

● 1-color/2-color LED

Item	2-wire proximity	3-wire proximity	2-wire proximity		3-wire proximity		
	F2S	F3S	F2H/F2V	F2YH/F2YV	F3H/F3V	F3PH/F3PV (made to order)	F3YH/F3YV
Applications	Dedicated for programmable controller	For programmable controller, relay	Dedicated for programmable controller		For programmable controller, relay		
Output method	-	NPN output	-		NPN output	PNP output	NPN output
Power supply voltage	-	10 to 28 VDC	-		10 to 28 VDC	4.5 to 28 VDC	10 to 28 VDC
Load voltage	10 to 30 VDC	30 VDC or less	10 to 30 VDC	24 VDC ±10%	30 VDC or less		
Load current	5 to 20 mA	50 mA or less	5 to 20 mA		50 mA or less		
Indicator	LED (Lit when ON)		Yellow LED (Lit when ON)	Red/green LED (Lit when ON)	Yellow LED (Lit when ON)		Red/green LED (Lit when ON)
Leakage current	1 mA or less	10 μA or less	1 mA or less		10 μA or less		
Weight g	1 m:10 3 m:29						

Switch specifications (T-switch)

● 1-color/2-color LED/for AC magnetic field proof

Item	2-wire proximity	2-wire proximity			3-wire proximity				2-wire reed							2-wire proximity
	T1H/T1V	T2H/T2V/ T2JH/T2JV	T2YH/ T2YV	T2WH/ T2WV	T3H/T3V	T3PH/ T3PV	T3YH/ T3YV	T3WH/ T3WV	T0H/T0V		T5H/T5V		T8H/T8V			T2YD (*4) T2YDT
Applications	For programmable controller, relay, compact solenoid valve	Dedicated for programmable controller			For programmable controller, relay				For programmable controller, relay		For programmable controller, relay, IC circuit (no indicator lamp), serial connection		For programmable controller, relay			For programmable controller
Output method	-				NPN output	PNP output	NPN output	NPN output	-							
Pwr. supp. V.	-				10 to 28 VDC				-							
Load voltage	85 to 265 VAC	10 to 30 VDC		24 VDC ±10%	30 VDC or less				12/24 VDC	100/110 VAC	5/12/24 VDC	100/110 VAC	12/24 VDC	110 VAC	220 VAC	24 VDC ±10%
Load current	5 to 100 mA	5 to 20 mA (*3)			100 mA or less		50 mA or less		5 to 50 mA	7 to 20 mA	50 mA or less	20 mA or less	5 to 50 mA	7 to 20 mA	7 to 10 mA	5 to 20 mA
Indicator	LED (Lit when ON)	LED (Lit when ON)	Red/green LED (Lit when ON)	Red/green LED (Lit when ON)	LED (Lit when ON)	Yellow LED (Lit when ON)	Red/green LED (Lit when ON)	Red/green LED (Lit when ON)	LED (Lit when ON)		No indicator lamp		LED (Lit when ON)			Red/green LED (Lit when ON)
Leakage current	≤ 1 mA at 100 VAC, ≤ 2 mA at 200 VAC	1 mA or less			10 μA or less				0 mA							1 mA or less
Weight g	1 m:33 3 m:87 5 m:142	1 m:18 3 m:49 5 m:80	1 m:33 3 m:87 5 m:142	1 m:18 3 m:49 5 m:80	1 m:18 3 m:49 5 m:80		1 m:33 3 m:87 5 m:142	1 m:18 3 m:49 5 m:80	1 m:18 3 m:49 5 m:80				1 m:33 3 m:87 5 m:142			1 m:61 3 m:166 5 m:272

*1 : Refer to Ending Page 1 for detailed switch specifications and dimensions.
*2 : Switches other than the above models, such as switches with connectors, are also available. Refer to Ending Page 1.
*3 : The max. load current is 20 mA at 25°C. The current is lower than 20 mA if the operating ambient temperature around the switch is higher than 25˚C. (5 to 10 mA at 60°C)
*4 : Switch for AC magnetic field (T2YD/T2YDT) cannot be used in DC magnetic field.
*5 : The F-switch uses a bend-resistant lead wire.

Cylinder weight table (the weight of the switches is when there are 2 cylinder switches.)

(Unit: g)

Stroke (mm)	5		10		15		20		25		30		35		40		45		50		75		100	
Bore size (mm)	No switch	Switch	No switch	Switch	No switch	Switch	No switch	Switch	No switch	Switch	No switch	Switch	No switch	Switch	No switch	Switch	No switch	Switch	No switch	Switch	No switch	Switch	No switch	Switch
ø12	36	86	44	86	53	95	61	103	70	112	72	114	-	-	-	-	-	-	-	-	-	-	-	-
ø16	48	104	59	104	69	114	80	125	91	136	102	147	-	-	-	-	-	-	-	-	-	-	-	-
ø20	63	118	75	150	88	163	101	176	113	188	126	201	139	214	152	227	165	240	203	278	-	-	-	-
ø25	87	178	102	193	118	209	134	225	150	241	165	256	181	272	197	288	213	304	228	319	-	-	-	-
ø32	122	236	144	258	166	280	188	302	209	323	231	345	253	367	275	389	297	411	318	432	494	542	604	652
ø40	183	326	210	353	236	379	263	406	290	433	316	459	342	485	369	512	395	538	472	565	646	695	776	825
ø50	-	-	341	535	383	577	425	619	467	661	510	704	552	746	594	788	636	830	678	872	1025	1082	1235	1292
ø63	-	-	507	786	562	841	617	896	672	951	727	1006	782	1061	838	1117	893	1172	948	1227	1438	1502	1713	1777
ø80	-	-	928	1341	1015	1428	1101	1514	1188	1601	1274	1687	1361	1774	1448	1861	1535	1948	1621	2034	2401	2467	2833	2899
ø100	-	-	1433	2000	1547	2114	1660	2227	1774	2341	1888	2455	2002	2569	2115	2682	2229	2796	2343	2910	3406	3478	3973	4045

Theoretical thrust table

(Unit: N)

Bore size (mm)	Operating direction	Working pressure MPa											
		0.05	0.1	0.15	0.2	0.3	0.4	0.5	0.6	0.7	0.8	0.9	1.0
ø12	Push	-	11.3	17.0	22.6	33.9	45.2	56.5	67.9	79.2	90.5	$1.02x10^2$	$1.13x10^2$
	Pull	-	8.48	12.7	17.0	25.4	33.9	42.4	50.9	59.4	67.9	76.3	84.8
ø16	Push	-	20.1	30.2	40.2	60.3	80.4	$1.01x10^2$	$1.21x10^2$	$1.41x10^2$	$1.61x10^2$	$1.81x10^2$	$2.01x10^2$
	Pull	-	15.1	22.6	30.2	45.2	60.3	75.4	90.5	$1.06x10^2$	$1.21x10^2$	$1.36x10^2$	$1.51x10^2$
ø20	Push	-	31.4	47.1	62.8	94.2	$1.26x10^2$	$1.57x10^2$	$1.88x10^2$	$2.20x10^2$	$2.51x10^2$	$2.83x10^2$	$3.14x10^2$
	Pull	-	23.6	35.3	47.1	70.7	94.2	$1.18x10^2$	$1.41x10^2$	$1.65x10^2$	$1.88x10^2$	$2.12x10^2$	$2.36x10^2$
ø25	Push	-	49.1	73.6	98.2	$1.47x10^2$	$1.96x10^2$	$2.45x10^2$	$2.95x10^2$	$3.44x10^2$	$3.93x10^2$	$4.42x10^2$	$4.91x10^2$
	Pull	-	37.8	56.7	75.6	$1.13x10^2$	$1.51x10^2$	$1.89x10^2$	$2.27x10^2$	$2.64x10^2$	$3.02x10^2$	$3.40x10^2$	$3.78x10^2$
ø32	Push	-	80.4	$1.21x10^2$	$1.61x10^2$	$2.41x10^2$	$3.22x10^2$	$4.02x10^2$	$4.83x10^2$	$5.63x10^2$	$6.43x10^2$	$7.24x10^2$	$8.04x10^2$
	Pull	-	60.3	90.5	$1.21x10^2$	$1.81x10^2$	$2.41x10^2$	$3.02x10^2$	$3.62x10^2$	$4.22x10^2$	$4.83x10^2$	$5.43x10^2$	$6.03x10^2$
ø40	Push	-	$1.26x10^2$	$1.88x10^2$	$2.51x10^2$	$3.77x10^2$	$5.03x10^2$	$6.28x10^2$	$7.54x10^2$	$8.80x10^2$	$1.01x10^3$	$1.13x10^3$	$1.26x10^3$
	Pull	-	$1.06x10^2$	$1.58x10^2$	$2.11x10^2$	$3.17x10^2$	$4.22x10^2$	$5.28x10^2$	$6.33x10^2$	$7.39x10^2$	$8.44x10^2$	$9.50x10^2$	$1.06x10^3$
ø50	Push	-	$1.96x10^2$	$2.95x10^2$	$3.93x10^2$	$5.89x10^2$	$7.85x10^2$	$9.82x10^2$	$1.18x10^3$	$1.37x10^3$	$1.57x10^3$	$1.77x10^3$	$1.96x10^3$
	Pull	-	$1.65x10^2$	$2.47x10^2$	$3.30x10^2$	$4.95x10^2$	$6.60x10^2$	$8.25x10^2$	$9.90x10^2$	$1.15x10^3$	$1.32x10^3$	$1.48x10^3$	$1.65x10^3$
ø63	Push	$1.56x10^2$	$3.12x10^2$	$4.68x10^2$	$6.23x10^2$	$9.35x10^2$	$1.25x10^3$	$1.56x10^3$	$1.87x10^3$	$2.18x10^3$	$2.49x10^3$	$2.81x10^3$	$3.12x10^3$
	Pull	$1.40x10^2$	$2.80x10^2$	$4.20x10^2$	$5.61x10^2$	$8.41x10^2$	$1.12x10^3$	$1.40x10^3$	$1.68x10^3$	$1.96x10^3$	$2.24x10^3$	$2.52x10^3$	$2.80x10^3$
ø80	Push	$2.51x10^2$	$5.03x10^2$	$7.54x10^2$	$1.01x10^3$	$1.51x10^3$	$2.01x10^3$	$2.51x10^3$	$3.02x10^3$	$3.52x10^3$	$4.02x10^3$	$4.52x10^3$	$5.03x10^3$
	Pull	$2.27x10^2$	$4.54x10^2$	$6.80x10^2$	$9.07x10^2$	$1.36x10^3$	$1.81x10^3$	$2.27x10^3$	$2.72x10^3$	$3.17x10^3$	$3.63x10^3$	$4.08x10^3$	$4.54x10^3$
ø100	Push	$3.93x10^2$	$7.85x10^2$	$1.18x10^3$	$1.57x10^3$	$2.36x10^3$	$3.14x10^3$	$3.93x10^3$	$4.71x10^3$	$5.50x10^3$	$6.28x10^3$	$7.07x10^3$	$7.85x10^3$
	Pull	$3.57x10^2$	$7.15x10^2$	$1.07x10^3$	$1.43x10^3$	$2.14x10^3$	$2.86x10^3$	$3.57x10^3$	$4.29x10^3$	$5.00x10^3$	$5.72x10^3$	$6.43x10^3$	$7.15x10^3$

SCP*3
CMK2
CMA2
SCM
SCG
SCA2
SCS2
CKV2
CAV2/COVP/N2
SSD2
SSG
SSD
CAT
MDC2
MVC
SMG
MSD/MSDG
FC*
STK
SRL3
SRG3
SRM3
SRT3
MRL2
MRG2
SM-25
ShkAbs
FJ
FK
Spd Contr
Ending

How to order

No switch (without magnet for switch)

SSD2-O - 12 ◯ - 5 ———— N - LB - I

With switch (built-in magnet for switch)

SSD2-OL - 12 ◯ - 10 - T0H - R - N - LB - I

- Ⓐ Model No.
- Ⓑ Bore size
- Ⓒ Port thread
- Ⓓ Stroke
- Ⓔ Switch model No. *1 *2 *3 *8 *10
- Ⓕ Switch quantity
- Ⓖ Option *4
- Ⓗ Mounting bracket *5 *6
- Ⓘ Accessory *7

Precautions for model No. selection

1 : The T2YD switch cannot be mounted on the ø12 and ø16 bore sizes.
2 : The T8 switch cannot be mounted on the ø12 to ø32 bore sizes.
*3 : The F-switch can only be mounted on the piping port surface of bore sizes ø20 and ø25.
*4 : Piston rod of ø12 to ø25 is stainless steel as standard. C-snap ring is stainless steel instead of steel.
The rod end male thread nut is stainless steel.
*5 : The mounting bracket is included at shipment.
*6 : The projection dimension of piston rod WF when LB or FA is selected is different from that of the standard.
Refer to the dimensions on pages 761, 763, 765 and 766. The number of the specified protruding dimension will be added at the end of the model No. printed on the metal plate on the body.
*7 : "I" and "Y" cannot be selected together.
*8 : The F-switch with L lead wire on ø20 models cannot be selected on strokes of 15 mm or under.
*9 : Refer to pages 750 and 751 for combinations of variations/options.
*10 : Switches are shipped with the product. Contact CKD if assembling before shipment is necessary.
*11 : F-switch cannot be selected.

[Example of model No.]

SSD2-OL-12-10-T0H-R-N-LB-I

Model: Compact cylinder double acting/low speed

- Ⓑ Bore size : ø12 mm
- Ⓒ Port thread : Rc thread
- Ⓓ Stroke : 10mm
- Ⓔ Switch model No. : Reed switch T0H, lead wire length 1 m
- Ⓕ Switch quantity : 1 on rod side
- Ⓖ Option : Rod end male thread
- Ⓗ Mounting bracket : Axial foot
- Ⓘ Accessory : Rod eye

Code	Description
Ⓐ Model No.	
SSD2-O	Double acting/single rod
SSD2-OL	Double acting/single rod/with switch
Ⓑ Bore size (mm)	
12	ø12
16	ø16
20	ø20
25	ø25
32	ø32
40	ø40
50	ø50
63	ø63
80	ø80
100	ø100
Ⓒ Port thread	
Blank	Rc thread
NN	NPT thread (ø32 and over) (made-to-order product)
GN	G thread (ø32 and over) (made-to-order product)
Ⓓ Stroke (mm)	
Refer to the stroke table on the following page.	

Ⓔ Switch model No.

Lead wire Straight	Lead wire L-shaped	Contact	Voltage AC	Voltage DC	Indicator	Lead wire	Bore size 12	16	20	25	32	40	50	63	80	100
-	F2S*	Proximity		●	1-color LED	2-wire			●	●						
-	F3S*	Proximity		●	1-color LED	3-wire			●	●						
F2H*	F2V*	Proximity		●	1-color LED	2-wire			●	●						
F3H*	F3V*	Proximity		●	1-color LED	3-wire			●	●						
F3PH*	F3PV*	Proximity		●	1-color LED (PNP output) (custom)	3-wire			●	●						
F2YH*	F2YV*	Proximity		●	2-color LED	2-wire			●	●						
F3YH*	F3YV*	Proximity		●	2-color LED	3-wire			●	●						
T0H*	T0V*	Reed	●	●	1-color LED	2-wire	●	●	●	●	●	●	●	●	●	●
T5H*	T5V*	Reed	●	●	No indicator lamp	2-wire	●	●	●	●	●	●	●	●	●	●
T8H*	T8V*	Reed	●	●	1-color LED	2-wire						●	●	●	●	●
T1H*	T1V*	Proximity	●		1-color LED	2-wire			●	●	●	●	●	●	●	●
T2H*	T2V*	Proximity		●	1-color LED	2-wire	●	●	●	●	●	●	●	●	●	●
T3H*	T3V*	Proximity		●	1-color LED	3-wire	●	●	●	●	●	●	●	●	●	●
T3PH*	T3PV*	Proximity		●	1-color LED (PNP output)	3-wire	●	●	●	●	●	●	●	●	●	●
T2WH*	T2WV*	Proximity		●	2-color LED	2-wire	●	●	●	●	●	●	●	●	●	●
T2YH*	T2YV*	Proximity		●	2-color LED	2-wire			●	●	●	●	●	●	●	●
T3WH*	T3WV*	Proximity		●	2-color LED	3-wire	●	●	●	●	●	●	●	●	●	●
T3YH*	T3YV*	Proximity		●	2-color LED	3-wire			●	●	●	●	●	●	●	●
T2YD*	-	Proximity		●	2-color LED for AC magnetic field	2-wire			●	●	●	●	●	●	●	●
T2YDT*	-	Proximity		●	2-color LED for AC magnetic field	2-wire			●	●	●	●	●	●	●	●
T2JH*	T2JV*	Proximity		●	1-color LED off-delay	2-wire			●	●	●	●	●	●	●	●

* Lead wire length	
Blank	1 m (standard)
3	3 m (option)
5	5 m (option) *11
Ⓕ Switch quantity	
R	1 on rod side
H	1 on head side
D	2
Ⓖ Option	
Blank	Rod end female thread
N	Rod end male thread
M *4	Piston rod material (stainless steel)
Ⓗ Mounting bracket	
Blank	Without mounting bracket
LB	Axial foot
CB	Clevis bracket (pin and snap ring included)
FA	Rod side flange
FB	Head side flange
Ⓘ Accessory (available when rod end male thread "N" is selected)	
I	Rod eye
Y	Rod clevis (pin and snap ring included)

[Stroke table]

Stroke (mm)		Applicable bore size									
		12	16	20	25	32	40	50	63	80	100
Standard stroke	5	●	●	●	●	●	●				
	10	●	●	●	●	●	●	●	●	●	●
	15	●	●	●	●	●	●	●	●	●	●
	20	●	●	●	●	●	●	●	●	●	●
	25	●	●	●	●	●	●	●	●	●	●
	30	●	●	●	●	●	●	●	●	●	●
	35			●	●	●	●	●	●	●	●
	40			●	●	●	●	●	●	●	●
	45			●	●	●	●	●	●	●	●
	50			●	●	●	●	●	●	●	●
	75					●	●	●	●	●	●
	100					●	●	●	●	●	●
Min. stroke (mm) *1		1									
Max. stroke (mm)		30		50		100					
Custom stroke *2		In 1 mm increments									

1 : Less than 5 mm for 1-color LED switch and less than 10 mm for the 2-color LED, off-delay, AC magnetic field proof, T1 or T8* switch are not available.
Refer to page 858 for the min. stroke with switch.
*2 : The total length when using a custom stroke is the same as that when using the next longer standard stroke.
*3 : Refer to pages 763 and 765 for the min. stroke with mounting bracket LB.

How to order switch

SW - T0H

Switch model No.
(Item Ⓔ on page 860)

How to order mounting bracket

Bore size (mm) / Mounting bracket	ø12	ø16	ø20	ø25	ø32	ø40	ø50
Foot (LB)	SSD2-LB-12	SSD2-LB-16	SSD2-LB-20	SSD2-LB-25	SSD2-LB-32	SSD2-LB-40	SSD2-LB-50
Flange (FA/FB)	SSD2-FA-12	SSD2-FA-16	SSD2-FA-20	SSD2-FA-25	SSD2-FA-32	SSD2-FA-40	SSD2-FA-50
Clevis bracket (CB)	SSD2-CB-12	SSD2-CB-16	SSD2-CB-20	SSD2-CB-25	SSD2-CB-32	SSD2-CB-40	SSD2-CB-50

Bore size (mm) / Mounting bracket	ø63	ø80	ø100
Foot (LB)	SSD2-LB-63	SSD2-LB-80	SSD2-LB-100
Flange (FA/FB)	SSD2-FA-63	SSD2-FA-80	SSD2-FA-100
Clevis bracket (CB)	SSD2-CB-63	SSD2-CB-80	SSD2-CB-100

*1: The foot mounting bracket is provided as 2 pcs./set.

Dimensions

Same as SSD2 Series (double acting/single rod). Refer to pages 760 to 766.

Internal structure and parts list (ø12 to 50)

● SSD2-O-L-12 to 25 (double acting/with switch)

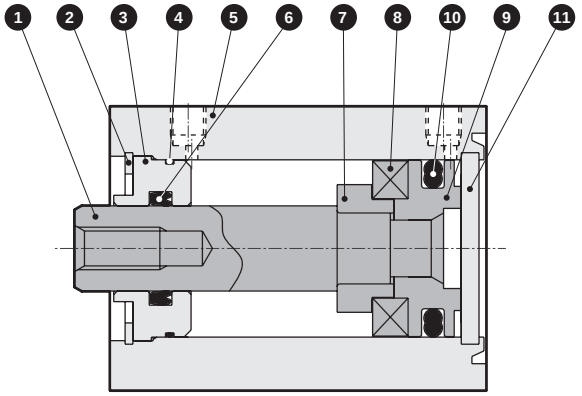

● SSD2-O-L-32 to 50 (double acting/with switch)

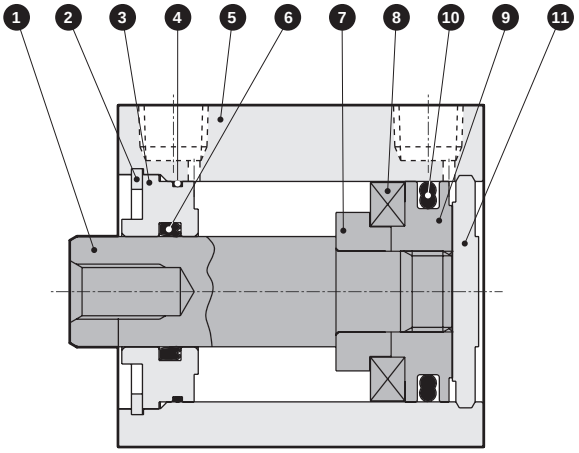

● SSD2-O-12 to 25 (double acting)

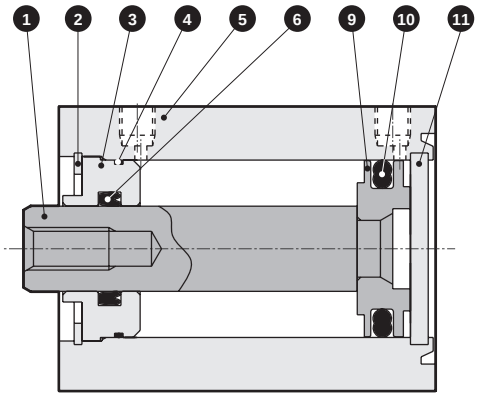

● SSD2-O-32 to 50 (double acting)

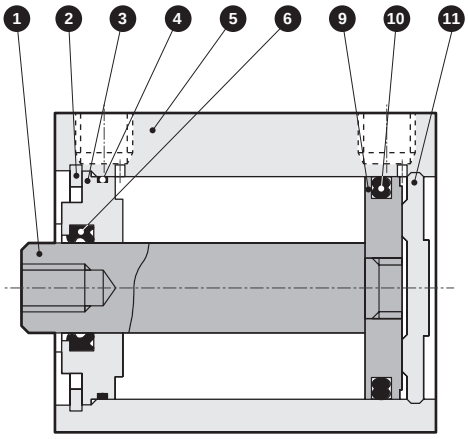

No.	Part name	Material	Remarks	No.	Part name	Material	Remarks
1	Piston rod	ø12 to ø25: Stainless steel ø32 to ø50: Steel	ø16 to ø50: Industrial chrome plating	7	Spacer	Aluminum alloy	ø12 to ø32: Chromate
2	C-snap ring	Steel	Zinc phosphate	8	Magnet	Plastic	
3	Rod metal	Special aluminum	Alumite	9	Piston	Aluminum alloy	Chromate
4	Rod metal gasket	Nitrile rubber		10	Piston packing	Nitrile rubber	
5	Body	Aluminum alloy	Hard alumite	11	Cover	ø12 to ø25: Stainless steel ø32 to ø50: Aluminum alloy	ø32 to ø50: Alumite
6	Rod packing	Nitrile rubber					

Repair parts list

Bore size (mm)	Kit No.	Repair parts No.
ø12	SSD2-O-12K	❹ ❻ ❿
ø16	SSD2-O-16K	
ø20	SSD2-O-20K	
ø25	SSD2-O-25K	
ø32	SSD2-O-32K	
ø40	SSD2-O-40K	
ø50	SSD2-O-50K	

Internal structure and parts list (ø63 to ø100)

● SSD2-O-L-63 to 100 (double acting/with switch)

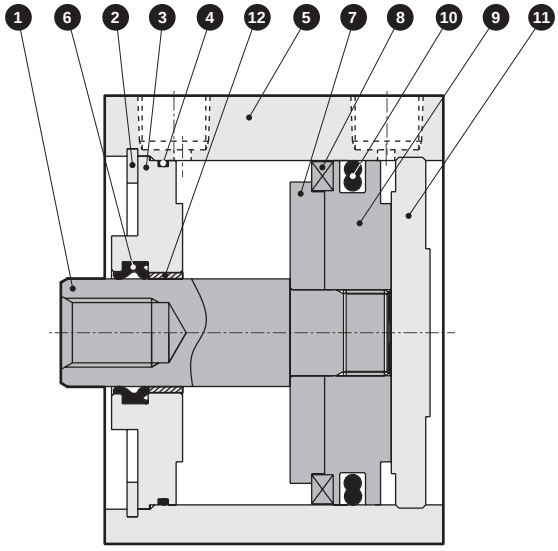

● SSD2-O-63 to 100 (double acting)

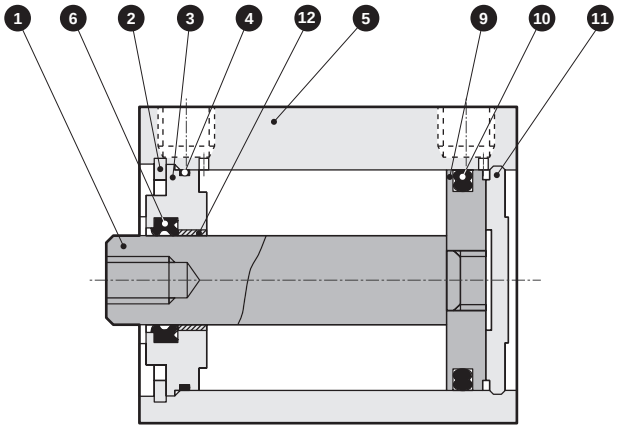

No.	Part name	Material	Remarks	No.	Part name	Material	Remarks
1	Piston rod	Steel	Industrial chrome plating	7	Spacer	Aluminum alloy	
2	C-snap ring	Steel	Zinc phosphate	8	Magnet	Plastic	
3	Rod metal	Aluminum alloy	Chromate	9	Piston	Aluminum alloy	Chromate
4	Rod metal gasket	Nitrile rubber		10	Piston packing	Nitrile rubber	
5	Body	Aluminum alloy	Hard alumite	11	Cover	Aluminum alloy	Alumite
6	Rod packing	Nitrile rubber		12	Bush	Oiles drymet	*1

*1: Material is steel for copper and PTFE free specifications.

Repair parts list

Bore size (mm)	Kit No.	Repair parts No.
ø63	SSD2-O-63K	4 6 10
ø80	SSD2-O-80K	
ø100	SSD2-O-100K	

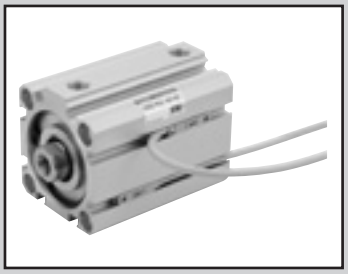

Compact cylinder double acting/high load/low friction

SSD2-KU Series

● Bore size: ø20/ø25/ø32/ø40
ø50/ø63/ø80/ø100

JIS symbol

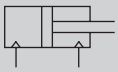

RoHS CAD

Specifications

Item	SSD2-KU SSD2-KUL (with switch)							
Bore size mm	ø20	ø25	ø32	ø40	ø50	ø63	ø80	ø100
Actuation	Double acting							
Working fluid	Compressed air							
Max. working pressure MPa	0.7 (≈100 psi, 7 bar)							
Min. working pressure MPa	0.03 (≈4.4 psi, 0.3 bar)							
Proof pressure MPa	1.0 (≈150 psi, 10 bar)							
Ambient temperature °C	5 (41°F) to 60 (140°F)							
Port size	M5		Rc1/8		Rc1/4		Rc3/8	
Stroke tolerance mm	+2.0 0							
Working piston speed mm/s	10 to 500					10 to 300		
Cushion	Rubber cushion							
Lubrication	Not available							
Allowable absorbed energy J	0.16	0.16	0.40	0.63	0.98	1.56	2.51	3.92
Internal leakage ℓ/min	5						8	

Stroke

Bore size (mm)	Standard stroke (mm)	Max. stroke (mm)	Min. stroke (mm)
ø20	5/10/15/20/25 30/35/40/45/50	50	5
ø25			
ø32	5/10/15/20/25/30/ 35/40/45/50/75/100	100	
ø40			
ø50	10/15/20/25 30/35/40/45/50 75/100		
ø63			
ø80			
ø100			

*1 : When using the type with switch, refer to the table of the min. stroke with switch.
*2: Refer to page 789 for the min. stroke with mounting bracket LB.

Min. stroke with switch (1 or 2 switches)

Bore size (mm)	T0H/V / T5H/V	T2H/V / T3H/V
ø20	5	5
ø25		
ø32		
ø40		
ø50		
ø63		
ø80		
ø100		

1: Less than 10 mm with the 2-color LED, off-delay, AC magnetic field proof, T1 or T8* switch is not available.

Custom stroke

● SSD2-KU Series

Item	Standard products Standard stroke body with spacer	
Model No.	Refer to How to order.	
Description	A spacer is added to the standard stroke body to adjust the stroke in 1 mm increments.	
Stroke range	Bore size	Stroke range
	20 to 25	1 to 49
	32 to 100	1 to 99
Example of model No.	Model No.: SSD2-KU-32-41 A +4 mm spacer is added to the SSD2-KU-32-45 standard cylinder to create 41 mm stroke. B + stroke is 78mm.	

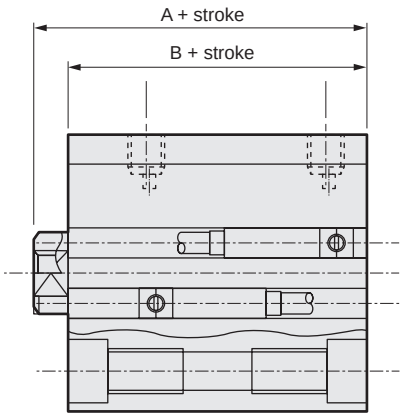

Switch specifications (F-switch)

● 1-color/2-color LED

Item	2-wire proximity	3-wire proximity	2-wire proximity		3-wire proximity		
	F2S	F3S	F2H/F2V	F2YH/F2YV	F3H/F3V	F3PH/F3PV (made to order)	F3YH/F3YV
Applications	Dedicated for programmable controller	For programmable controller, relay	Dedicated for programmable controller		For programmable controller, relay		
Output method	-	NPN output	-		NPN output	PNP output	NPN output
Power supply voltage	-	10 to 28 VDC	-		10 to 28 VDC	4.5 to 28 VDC	10 to 28 VDC
Load voltage	10 to 30 VDC	30 VDC or less	10 to 30 VDC	24 VDC ±10%	30 VDC or less		
Load current	5 to 20 mA	50 mA or less	5 to 20 mA		50 mA or less		
Indicator	LED (Lit when ON)		Yellow LED (Lit when ON)	Red/green LED (Lit when ON)	Yellow LED (Lit when ON)		Red/green LED (Lit when ON)
Leakage current	1 mA or less	10 μA or less	1 mA or less		10 μA or less		
Weight g	1 m:10 3 m:29						

Switch specifications (T-switch)

● 1-color/2-color LED/for AC magnetic field proof

Item	2-wire proximity	2-wire proximity			3-wire proximity				2-wire reed							2-wire proximity
	T1H/T1V	T2H/T2V/ T2JH/T2JV	T2YH/ T2YV	T2WH/ T2WV	T3H/T3V	T3PH/ T3PV	T3YH/ T3YV	T3WH/ T3WV	T0H/T0V		T5H/T5V		T8H/T8V			T2YD(*4) T2YDT
Applications	For programmable controller, relay, compact solenoid valve	Dedicated for programmable controller			For programmable controller, relay				For programmable controller, relay		For programmable controller, relay, IC circuit (no indicator lamp), serial connection		For programmable controller, relay			For programmable controller
Output method	-				NPN output	PNP output	NPN output	NPN output	-							
Pwr. supp. V.	-				10 to 28 VDC				-							
Load voltage	85 to 265 VAC	10 to 30 VDC		24 VDC ±10%	30 VDC or less				12/24 VDC	100/110 VAC	5/12/24 VDC	100/110 VAC	12/24 VDC	110 VAC	220 VAC	24 VDC ±10%
Load current	5 to 100 mA	5 to 20 mA (*3)			100 mA or less		50 mA or less		5 to 50 mA	7 to 20 mA	50 mA or less	20 mA or less	5 to 50 mA	7 to 20 mA	7 to 10 mA	5 to 20 mA
Indicator	LED (Lit when ON)	LED (Lit when ON)	Red/green LED (Lit when ON)	Red/green LED (Lit when ON)	LED (Lit when ON)	Yellow LED (Lit when ON)	Red/green LED (Lit when ON)	Red/green LED (Lit when ON)	LED (Lit when ON)		No indicator lamp		LED (Lit when ON)			Red/green LED (Lit when ON)
Leakage current	≤ 1 mA at 100 VAC, ≤ 2 mA at 200 VAC	1 mA or less			10 μA or less				0 mA							1 mA or less
Weight g	1 m:33 3 m:87 5 m:142	1 m:18 3 m:49 5 m:80	1 m:33 3 m:87 5 m:142	1 m:18 3 m:49 5 m:80	1 m:18 3 m:49 5 m:80		1 m:33 3 m:87 5 m:142	1 m:18 3 m:49 5 m:80	1 m:18 3 m:49 5 m:80				1 m:33 3 m:87 5 m:142			1 m:61 3 m:166 5 m:272

*1 : Refer to Ending Page 1 for detailed switch specifications and dimensions.
*2 : Switches other than the above models, such as switches with connectors, are also available. Refer to Ending Page 1.
*3 : The max. load current is 20 mA at 25°C. The current is lower than 20 mA if the operating ambient temperature around the switch is higher than 25°C. (5 to 10 mA at 60°C)
*4 : Switch for AC magnetic field (T2YD/T2YDT) cannot be used in DC magnetic field.
*5 : The F-switch uses a bend-resistant lead wire.

Theoretical thrust table

(Unit: N)

Bore size (mm)	Operating direction	Working pressure MPa								
		0.03	0.1	0.15	0.2	0.3	0.4	0.5	0.6	0.7
ø20	Push	9.42	31.4	47.1	62.8	94.2	$1.26x10^2$	$1.57x10^2$	$1.88x10^2$	$2.20x10^2$
	Pull	7.07	23.6	35.3	47.1	70.7	94.2	$1.18x10^2$	$1.41x10^2$	$1.65x10^2$
ø25	Push	14.7	49.1	73.6	98.2	$1.47x10^2$	$1.96x10^2$	$2.45x10^2$	$2.95x10^2$	$3.44x10^2$
	Pull	11.3	37.8	56.7	75.6	$1.13x10^2$	$1.51x10^2$	$1.89x10^2$	$2.27x10^2$	$2.64x10^2$
ø32	Push	24.1	80.4	$1.21x10^2$	$1.61x10^2$	$2.41x10^2$	$3.22x10^2$	$4.02x10^2$	$4.83x10^2$	$5.63x10^2$
	Pull	18.1	60.3	90.5	$1.21x10^2$	$1.81x10^2$	$2.41x10^2$	$3.02x10^2$	$3.62x10^2$	$4.22x10^2$
ø40	Push	37.7	$1.26x10^2$	$1.88x10^2$	$2.51x10^2$	$3.77x10^2$	$5.03x10^2$	$6.28x10^2$	$7.54x10^2$	$8.80x10^2$
	Pull	31.7	$1.06x10^2$	$1.58x10^2$	$2.11x10^2$	$3.17x10^2$	$4.22x10^2$	$5.28x10^2$	$6.33x10^2$	$7.39x10^2$
ø50	Push	58.9	$1.96x10^2$	$2.95x10^2$	$3.93x10^2$	$5.89x10^2$	$7.85x10^2$	$9.82x10^2$	$1.18x10^3$	$1.37x10^3$
	Pull	49.5	$1.65x10^2$	$2.47x10^2$	$3.30x10^2$	$4.95x10^2$	$6.60x10^2$	$8.25x10^2$	$9.90x10^2$	$1.15x10^3$
ø63	Push	93.5	$3.12x10^2$	$4.68x10^2$	$6.23x10^2$	$9.35x10^2$	$1.25x10^3$	$1.56x10^3$	$1.87x10^3$	$2.18x10^3$
	Pull	84.0	$2.80x10^2$	$4.20x10^2$	$5.61x10^2$	$8.41x10^2$	$1.12x10^3$	$1.40x10^3$	$1.68x10^3$	$1.96x10^3$
ø80	Push	$1.51x10^2$	$5.03x10^2$	$7.54x10^2$	$1.01x10^3$	$1.51x10^3$	$2.01x10^3$	$2.51x10^3$	$3.02x10^3$	$3.52x10^3$
	Pull	$1.36x10^2$	$4.54x10^2$	$6.80x10^2$	$9.07x10^2$	$1.36x10^3$	$1.81x10^3$	$2.27x10^3$	$2.72x10^3$	$3.17x10^3$
ø100	Push	$2.36x10^2$	$7.85x10^2$	$1.18x10^3$	$1.57x10^3$	$2.36x10^3$	$3.14x10^3$	$3.93x10^3$	$4.71x10^3$	$5.50x10^3$
	Pull	$2.14x10^2$	$7.15x10^2$	$1.07x10^3$	$1.43x10^3$	$2.14x10^3$	$2.86x10^3$	$3.57x10^3$	$4.29x10^3$	$5.00x10^3$

How to order

No switch (without magnet for switch)

SSD2-KU - 20 ◯ - 10 ———— N - LB - I

With switch (built-in magnet for switch)

SSD2-KUL - 20 ◯ - 10 - T0H - R - N - LB - I

- Ⓐ Bore size
- Ⓑ Port thread
- Ⓒ Stroke
- Ⓓ Switch model No. *1 *6 *8
- Ⓔ Switch quantity
- Ⓕ Option *2
- Ⓖ Mounting bracket *3 *4
- Ⓗ Accessory *5

Precautions for model No. selection

*1 : The F-switch can only be mounted on the piping port surface of bore sizes ø20 and ø25.
*2 : Piston rod of ø20 and ø25 is stainless steel as standard. C-snap ring is stainless steel instead of steel. The rod end male thread nut is stainless steel.
*3 : The mounting bracket is included at shipment.
*4 : The projection dimension of piston rod WF when LB or FA is selected is different from that of the standard. Refer to the dimensions on pages 783, 785, 787, 789 and 790. The number of the specified protruding dimension will be added at the end of the model No. printed on the metal plate on the body.
*5 : "I" and "Y" cannot be selected together.
*6 : The F-switch with L lead wire on ø20 models cannot be selected on strokes 10 mm or under.
*7 : Refer to pages 750 and 751 for combinations of variations/options.
*8 : Switches are shipped with the product. Contact CKD if assembling before shipment is necessary.
*9 : F-switch cannot be selected.

[Example of model No.]

SSD2-KUL-20-10-T0H-R-N

Model: Compact cylinder, high load/low friction

- Ⓐ Bore size : ø20 mm
- Ⓑ Port thread : Rc thread
- Ⓒ Stroke : 10mm
- Ⓓ Switch model No. : Reed T0H switch
  · Lead wire 1 m
- Ⓔ Switch quantity : 1 on rod side
- Ⓕ Option : Rod end male thread

Code	Description
Ⓐ Bore size (mm)	
20	ø20
25	ø25
32	ø32
40	ø40
50	ø50
63	ø63
80	ø80
100	ø100
Ⓑ Port thread	
Blank	Rc thread
NN	NPT thread (ø32 and over) (made-to-order product)
GN	G thread (ø32 and over) (made-to-order product)
Ⓒ Stroke (mm)	
Refer to the stroke table on the following page.	

Ⓓ Switch model No.

Lead wire Straight	Lead wire L-shaped	Contact	Voltage AC	Voltage DC	Indicator	Lead wire	Bore size 20	25	32	40	50	63	80	100
-	F2S*	Proximity		●	1-color LED	2-wire	●	●						
-	F3S*	Proximity		●	1-color LED	3-wire	●	●						
F2H*	F2V*	Proximity		●	1-color LED	2-wire	●	●						
F3H*	F3V*	Proximity		●	1-color LED	3-wire	●	●						
F3PH*	F3PV*	Proximity		●	1-color LED (PNP output) (custom)	3-wire	●	●						
F2YH*	F2YV*	Proximity		●	2-color LED	2-wire	●	●						
F3YH*	F3YV*	Proximity		●	2-color LED	3-wire	●	●						
T0H*	T0V*	Reed	●	●	1-color LED	2-wire	●	●	●	●	●	●	●	●
T5H*	T5V*	Reed	●	●	No indicator lamp	2-wire	●	●	●	●	●	●	●	●
T8H*	T8V*	Reed	●	●	1-color LED	2-wire				●	●	●	●	●
T1H*	T1V*	Proximity	●		1-color LED	2-wire	●	●	●	●	●	●	●	●
T2H*	T2V*	Proximity		●	1-color LED	2-wire	●	●	●	●	●	●	●	●
T3H*	T3V*	Proximity		●	1-color LED	3-wire	●	●	●	●	●	●	●	●
T3PH*	T3PV*	Proximity		●	1-color LED (PNP output)	3-wire	●	●	●	●	●	●	●	●
T2WH*	T2WV*	Proximity		●	2-color LED	2-wire	●	●	●	●	●	●	●	●
T2YH*	T2YV*	Proximity		●	2-color LED	2-wire	●	●	●	●	●	●	●	●
T3WH*	T3WV*	Proximity		●	2-color LED	3-wire	●	●	●	●	●	●	●	●
T3YH*	T3YV*	Proximity		●	2-color LED	3-wire	●	●	●	●	●	●	●	●
T2YD*	-	Proximity		●	2-color LED for AC magnetic field	2-wire	●	●	●	●	●	●	●	●
T2YDT*	-	Proximity		●	2-color LED for AC magnetic field	2-wire	●	●	●	●	●	●	●	●
T2JH*	T2JV*	Proximity		●	1-color LED off-delay	2-wire	●	●	●	●	●	●	●	●

* Lead wire length	
Blank	1 m (standard)
3	3 m (option)
5	5 m (option) *9
Ⓔ Switch quantity	
R	1 on rod side
H	1 on head side
D	2
Ⓕ Option	
Blank	Rod end female thread
N	Rod end male thread
M *2	Piston rod material (stainless steel)
Ⓖ Mounting bracket	
Blank	Without mounting bracket
LB	Axial foot
CB	Clevis bracket (pin and snap ring included)
FA	Rod side flange
FB	Head side flange
Ⓗ Accessory (available when rod end male thread "N" is selected)	
I	Rod eye
Y	Rod clevis (pin and snap ring included)

[Stroke table]

Stroke (mm)		Applicable bore size							
		ø20	ø25	ø32	ø40	ø50	ø63	ø80	ø100
Standard stroke	5	●	●	●	●				
	10	●	●	●	●	●	●	●	●
	15	●	●	●	●	●	●	●	●
	20	●	●	●	●	●	●	●	●
	25	●	●	●	●	●	●	●	●
	30	●	●	●	●	●	●	●	●
	35	●	●	●	●	●	●	●	●
	40	●	●	●	●	●	●	●	●
	45	●	●	●	●	●	●	●	●
	50	●	●	●	●	●	●	●	●
	75			●	●	●	●	●	●
	100			●	●	●	●	●	●
Min. stroke (mm)		5							
Max. stroke (mm)		50		100					
Custom stroke *2		In 1 mm increments							

1 : Less than 10 mm with the 2-color LED, off-delay, strong magnetic field proof, T1 or T8* switch is not available.
Refer to page 864 for the min. stroke with switch.
*2 : The total length is the same as that of the next longer standard stroke.
*3 : Refer to page 789 for the min. stroke with mounting bracket LB.

How to order mounting bracket

Bore size (mm) / Mounting bracket	ø20	ø25	ø32	ø40	ø50	ø63	ø80	ø100
Foot (LB)	SSD2-LB-20	SSD2-LB-25	SSD2-LB-32	SSD2-LB-40	SSD2-LB-50	SSD2-LB-63	SSD2-LB-80	SSD2-LB-100
Flange (FA/FB)	SSD2-FA-20	SSD2-FA-25	SSD2-FA-32	SSD2-FA-40	SSD2-FA-50	SSD2-FA-63	SSD2-FA-80	SSD2-FA-100
Clevis bracket (CB)	SSD2-CB-20	SSD2-CB-25	SSD2-CB-32	SSD2-CB-40	SSD2-CB-50	SSD2-CB-63	SSD2-CB-80	SSD2-CB-100

*1: The foot mounting bracket is provided as 2 pcs./set.

Dimensions

Same as SSD2-K Series (double acting/high load). Refer to pages 782 to 790.

Technical data

Refer to SCM-U Series on page 306 for technical data regarding sliding resistance values.
SSD2-KU Series shows a similar trend to the data of “SCM-U Series”.

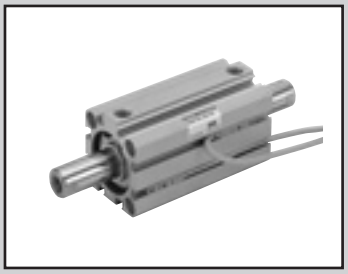

Compact cylinder double acting/double rod

SSD2-D Series

● Bore size: ø12/ø16/ø20/ø25/ø32/ø40/ø50/ø63/ø80/ø100

JIS symbol

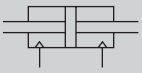

RoHS CAD

Specifications

Item		SSD2-D SSD2-DL (with switch)									
Bore size mm		ø12	ø16	ø20	ø25	ø32	ø40	ø50	ø63	ø80	ø100
Actuation		Double acting									
Working fluid		Compressed air									
Max. working pressure MPa		1.0 (≈150 psi, 10 bar)									
Min. working pressure MPa		0.15 (≈22 psi, 1.5 bar)							0.1 (≈15 psi, 1 bar)		
Proof pressure MPa		1.6 (≈230 psi, 16 bar)									
Ambient temperature °C		-10 (14°F) to 60 (140°F) (no freezing)									
Port size		M5				Rc1/8 *1		Rc1/4		Rc3/8	
Stroke tolerance mm	With rubber cushion	$^{+2.0}_{0}$									
	Without cushion	$^{+1.0}_{0}$									
Working piston speed mm/s		50 to 500							50 to 300		
Cushion		With or without cushion can be selected									
Lubrication		Not required (use turbine oil class 1 ISO VG32 if necessary for lubrication)									
Allowable absorbed energy J	With rubber cushion	0.03	0.05	0.10	0.16	0.16	0.44	0.75	0.78	2.51	3.92
	Without cushion	0.004	0.01	0.016	0.021	0.025	0.092	0.1	0.12	0.27	0.56

*1: The ø32 bore size with a 5 mm stroke and without a switch has a port size of M5.

Stroke

Bore size (mm)	Standard stroke (mm)	Max. stroke (mm)	Min. stroke (mm)
ø12	5/10/15/20 25/30	30	5
ø16			
ø20	5/10/15/20/25 30/35/40/45/50	50	
ø25			
ø32	5/10/15/20/25/30/ 35/40/45/50/75/100	100	
ø40			
ø50	10/15/20/25 30/35/40/45/50 75/100		10
ø63			
ø80			
ø100			

*: Refer to page 881 for the min. stroke with mounting bracket LB.

Min. stroke with switch (1 or 2 switches)

Bore size (mm)	T0H/V / T5H/V	T2H/V / T3H/V
ø12	5	5
ø16		
ø20		
ø25		
ø32		
ø40		
ø50		
ø63		
ø80		
ø100		

Note: Less than 10 mm with the 2-color LED, off-delay, AC magnetic field proof, T1* or T8* switch is not available.

Switch specifications (F-switch)

● 1-color/2-color LED

Item	2-wire proximity	3-wire proximity	2-wire proximity		3-wire proximity		
	F2S	F3S	F2H/F2V	F2YH/F2YV	F3H/F3V	F3PH/F3PV (made to order)	F3YH/F3YV
Applications	Dedicated for programmable controller	For programmable controller, relay	Dedicated for programmable controller		For programmable controller, relay		
Output method	-	NPN output	-		NPN output	PNP output	NPN output
Power supply voltage	-	10 to 28 VDC	-		10 to 28 VDC	4.5 to 28 VDC	10 to 28 VDC
Load voltage	10 to 30 VDC	30 VDC or less	10 to 30 VDC	24 VDC ±10%	30 VDC or less		
Load current	5 to 20 mA	50 mA or less	5 to 20 mA		50 mA or less		
Indicator	LED (Lit when ON)		Yellow LED (Lit when ON)	Red/green LED (Lit when ON)	Yellow LED (Lit when ON)		Red/green LED (Lit when ON)
Leakage current	1 mA or less	10 μA or less	1 mA or less		10 μA or less		
Weight g	1 m:10 3 m:29						

Switch specifications (T-switch)

● 1-color/2-color LED/for AC magnetic field proof

Item	2-wire proximity	2-wire proximity			3-wire proximity				2-wire reed							2-wire proximity
	T1H/T1V	T2H/T2V/ T2JH/T2JV	T2YH/ T2YV	T2WH/ T2WV	T3H/T3V	T3PH/ T3PV	T3YH/ T3YV	T3WH/ T3WV	T0H/T0V		T5H/T5V		T8H/T8V			T2YD(*4) T2YDT
Applications	For programmable controller, relay, compact solenoid valve	Dedicated for programmable controller			For programmable controller, relay				For programmable controller, relay		For programmable controller, relay, IC circuit (no indicator lamp), serial connection		For programmable controller, relay			For programmable controller
Output method	-				NPN output	PNP output	NPN output	NPN output	-							
Pwr. supp. V.	-				10 to 28 VDC				-							
Load voltage	85 to 265 VAC	10 to 30 VDC		24 VDC ±10%	30 VDC or less				12/24 VDC	100/110 VAC	5/12/24 VDC	100/110 VAC	12/24 VDC	110 VAC	220 VAC	24 VDC ±10%
Load current	5 to 100 mA	5 to 20 mA (*3)			100 mA or less		50 mA or less		5 to 50 mA	7 to 20 mA	50 mA or less	20 mA or less	5 to 50 mA	7 to 20 mA	7 to 10 mA	5 to 20 mA
Indicator	LED (Lit when ON)	LED (Lit when ON)	Red/green LED (Lit when ON)	Red/green LED (Lit when ON)	LED (Lit when ON)	Yellow LED (Lit when ON)	Red/green LED (Lit when ON)	Red/green LED (Lit when ON)	LED (Lit when ON)		No indicator lamp		LED (Lit when ON)			Red/green LED (Lit when ON)
Leakage current	≤ 1 mA at 100 VAC, ≤ 2 mA at 200 VAC	1 mA or less			10 μA or less				0 mA							1 mA or less
Weight g	1 m:33 3 m:87 5 m:142	1 m:18 3 m:49 5 m:80	1 m:33 3 m:87 5 m:142	1 m:18 3 m:49 5 m:80	1 m:18 3 m:49 5 m:80		1 m:33 3 m:87 5 m:142	1 m:18 3 m:49 5 m:80	1 m:18 3 m:49 5 m:80				1 m:33 3 m:87 5 m:142			1 m:61 3 m:166 5 m:272

*1 : Refer to Ending Page 1 for detailed switch specifications and dimensions.
*2 : Switches other than the above models, such as switches with connectors, are also available. Refer to Ending Page 1.
*3 : The max. load current is 20 mA at 25°C. The current is lower than 20 mA if the operating ambient temperature around the switch is higher than 25˚C. (5 to 10 mA at 60°C)
*4 : Switch for AC magnetic field (T2YD/T2YDT) cannot be used in DC magnetic field.
*5 : The F-switch uses a bend-resistant lead wire.

Cylinder weight table

(the weight of the switches is when there are 2 cylinder switches.) (Unit: g)

Stroke (mm)	5		10		15		20		25		30		35		40		45		50		75		100	
Bore size (mm)	No switch	Switch	No switch	Switch	No switch	Switch	No switch	Switch	No switch	Switch	No switch	Switch	No switch	Switch	No switch	Switch	No switch	Switch	No switch	Switch	No switch	Switch	No switch	Switch
ø12	52	105	60	105	69	115	77	124	86	134	95	147	-	-	-	-	-	-	-	-	-	-	-	-
ø16	74	133	85	133	95	144	106	156	117	168	128	177	-	-	-	-	-	-	-	-	-	-	-	-
ø20	131	187	143	222	161	238	179	254	196	269	214	285	232	301	249	316	267	332	284	347	-	-	-	-
ø25	147	238	162	253	178	269	194	285	210	301	226	316	242	332	257	348	275	364	288	379	-	-	-	-
ø32	184	299	230	344	275	390	322	436	366	481	413	527	459	573	469	612	485	628	522	665	776	785	1004	1012
ø40	283	426	310	453	336	479	363	506	390	533	416	569	443	601	507	617	553	663	601	707	1317	1333	1475	1490
ø50	-	-	508	702	558	751	608	803	658	851	708	901	758	950	808	1001	835	1033	911	1105	2007	2025	2252	2270
ø63	-	-	902	1266	977	1341	1052	1416	1127	1491	1202	1566	1278	1642	1353	1717	1428	1792	1503	1867	2218	2242	2593	2617
ø80	-	-	1608	1538	1725	1916	1841	2294	1958	2411	2074	2527	2191	2649	2308	2771	2425	2888	2541	3004	3560	3587	4143	4169
ø100	-	-	2483	3105	2652	3254	2820	3402	2989	3586	3158	3770	3327	3934	3495	4097	3664	4261	3833	4425	5213	5245	6033	6065

Theoretical thrust table

(Unit: N)

Bore size (mm)	Operating direction	Working pressure MPa										
		0.1	0.15	0.2	0.3	0.4	0.5	0.6	0.7	0.8	0.9	1.0
ø12	Push/Pull	-	12.7	17.0	25.4	33.9	42.4	50.9	59.4	67.9	76.3	84.8
ø16	Push/Pull	-	22.6	30.2	45.2	60.3	75.4	90.5	$1.06x10^2$	$1.21x10^2$	$1.36x10^2$	$1.51x10^2$
ø20	Push/Pull	-	35.3	47.1	70.7	94.2	$1.18x10^2$	$1.41x10^2$	$1.65x10^2$	$1.88x10^2$	$2.12x10^2$	$2.36x10^2$
ø25	Push/Pull	-	56.7	75.6	$1.13x10^2$	$1.51x10^2$	$1.89x10^2$	$2.27x10^2$	$2.64x10^2$	$3.02x10^2$	$3.40x10^2$	$3.78x10^2$
ø32	Push/Pull	-	90.5	$1.21x10^2$	$1.81x10^2$	$2.41x10^2$	$3.02x10^2$	$3.62x10^2$	$4.22x10^2$	$4.83x10^2$	$5.43x10^2$	$6.03x10^2$
ø40	Push/Pull	-	$1.58x10^2$	$2.11x10^2$	$3.17x10^2$	$4.22x10^2$	$5.28x10^2$	$6.33x10^2$	$7.39x10^2$	$8.44x10^2$	$9.50x10^2$	$1.06x10^3$
ø50	Push/Pull	-	$2.47x10^2$	$3.30x10^2$	$4.95x10^2$	$6.60x10^2$	$8.25x10^2$	$9.90x10^2$	$1.15x10^3$	$1.32x10^3$	$1.48x10^3$	$1.65x10^3$
ø63	Push/Pull	$2.80x10^2$	$4.20x10^2$	$5.61x10^2$	$8.41x10^2$	$1.12x10^3$	$1.40x10^3$	$1.68x10^3$	$1.96x10^3$	$2.24x10^3$	$2.52x10^3$	$2.80x10^3$
ø80	Push/Pull	$4.54x10^2$	$6.80x10^2$	$9.07x10^2$	$1.36x10^3$	$1.81x10^3$	$2.27x10^3$	$2.72x10^3$	$3.17x10^3$	$3.63x10^3$	$4.08x10^3$	$4.54x10^3$
ø100	Push/Pull	$7.15x10^2$	$1.07x10^3$	$1.43x10^3$	$2.14x10^3$	$2.86x10^3$	$3.57x10^3$	$4.29x10^3$	$5.00x10^3$	$5.72x10^3$	$6.43x10^3$	$7.15x10^3$

SCP*3
CMK2
CMA2
SCM
SCG
SCA2
SCS2
CKV2
CAV2/COVP/N2
SSD2
SSG
SSD
CAT
MDC2
MVC
SMG
MSD/MSDG
FC*
STK
SRL3
SRG3
SRM3
SRT3
MRL2
MRG2
SM-25
ShkAbs
FJ
FK
Spd Contr
Ending

How to order

No switch (without magnet for switch)

SSD2-D - 12 ○ ○ - 5 ———— N - LB - I

With switch (built-in magnet for switch)

SSD2-DL - 12 ○ ○ - 10 - T0H - R - N - LB - I

- Ⓐ Model No.
- Ⓑ Bore size
- Ⓒ Port thread
- Ⓓ Cushion
- Ⓔ Stroke
- Ⓕ Switch model No. *1, *2 *3, *8 *9
- Ⓖ Switch quantity
- Ⓗ Option *4
- Ⓘ Mounting bracket *5 *6
- Ⓙ Accessory *7

Precautions for model No. selection

1 : The T2YD switch cannot be mounted on the ø12 and ø16 bore sizes.
2 : The T8 switch cannot be mounted on ø12 and ø16.
*3 : The F-switch can only be mounted on the piping port surface of bore sizes ø20 and ø25.
*4 : Piston rod of ø12 to ø25 is stainless steel as standard. C-snap ring is stainless steel instead of steel. The rod end male thread nut is stainless steel.
*5 : The mounting bracket is included at shipment.
*6 : The projection dimension of piston rod WF when LB or FA is selected is different from that of the standard. Refer to the dimensions on pages 877, 879 and 881. The number of the specified protruding dimension will be added at the end of the model No. printed on the metal plate on the body.
*7 : "I" and "Y" cannot be selected together.
*8 : The F-switch with L type lead wire on ø20 models cannot be selected on strokes of 15 mm or under.
*9 : Switches are shipped with the product. Contact CKD if assembling before shipment is necessary.
*10: Refer to pages 750 and 751 for combinations of variations/options.
*11 : F-switch cannot be selected.

[Example of model No.]

SSD2-DL-12-5-T0H-R-N-LB-I

Model: Compact cylinder double acting/double rod

- Ⓑ Bore size : ø12 mm
- Ⓒ Port thread : Rc thread
- Ⓓ Cushion : No cushion
- Ⓔ Stroke : 5mm
- Ⓕ Switch model No. : Reed T0H switch/ Lead wire length 1 m
- Ⓖ Switch quantity : 1 on rod side
- Ⓗ Option : Rod end male thread
- Ⓘ Mounting bracket : Axial foot
- Ⓙ Accessory : Rod eye

How to order switch

SW - T0H

Switch model No. (Item Ⓕ above)

Code	Description
Ⓐ Model No.	
SSD2-D	Double acting/double rod
SSD2-DL	Double acting/double rod/with switch
Ⓑ Bore size (mm)	
12	ø12
16	ø16
20	ø20
25	ø25
32	ø32
40	ø40
50	ø50
63	ø63
80	ø80
100	ø100
Ⓒ Port thread	
Blank	Rc thread
NN	NPT thread (ø32 and over) (made-to-order product)
GN	G thread (ø32 and over) (made-to-order product)
Ⓓ Cushion	
Blank	Without cushion
D	With rubber cushion
Ⓔ Stroke (mm)	
Refer to the stroke table on the following page.	

Ⓕ Switch model No.

Lead wire Straight	Lead wire L-shaped	Contact	Voltage AC	Voltage DC	Indicator	Lead wire	Bore size 12	16	20	25	32	40	50	63	80	100
-	F2S*	Proximity		●	1-color LED	2-wire			●	●						
-	F3S*	Proximity		●	1-color LED	3-wire			●	●						
F2H*	F2V*	Proximity		●	1-color LED	2-wire			●	●						
F3H*	F3V*	Proximity		●	1-color LED	3-wire			●	●						
F3PH*	F3PV*	Proximity		●	1-color LED (PNP output) (custom)	3-wire			●	●						
F2YH*	F2YV*	Proximity		●	2-color LED	2-wire			●	●						
F3YH*	F3YV*	Proximity		●	2-color LED	3-wire			●	●						
T0H*	T0V*	Reed	●	●	1-color LED	2-wire	●	●	●	●	●	●	●	●	●	●
T5H*	T5V*	Reed	●	●	No indicator lamp	2-wire	●	●	●	●	●	●	●	●	●	●
T8H*	T8V*	Reed	●	●	1-color LED	2-wire			●	●	●	●	●	●	●	●
T1H*	T1V*	Proximity	●		1-color LED	2-wire	●	●	●	●	●	●	●	●	●	●
T2H*	T2V*	Proximity		●	1-color LED	2-wire	●	●	●	●	●	●	●	●	●	●
T3H*	T3V*	Proximity		●	1-color LED	3-wire	●	●	●	●	●	●	●	●	●	●
T3PH*	T3PV*	Proximity		●	1-color LED (PNP output)	3-wire	●	●	●	●	●	●	●	●	●	●
T2WH*	T2WV*	Proximity		●	2-color LED	2-wire	●	●	●	●	●	●	●	●	●	●
T2YH*	T2YV*	Proximity		●	2-color LED	2-wire	●	●	●	●	●	●	●	●	●	●
T3WH*	T3WV*	Proximity		●	2-color LED	3-wire	●	●	●	●	●	●	●	●	●	●
T3YH*	T3YV*	Proximity		●	2-color LED	3-wire	●	●	●	●	●	●	●	●	●	●
T2YD*	-	Proximity		●	2-color LED AC magnetic field	2-wire			●	●	●	●	●	●	●	●
T2YDT*	-	Proximity		●	2-color LED AC magnetic field	2-wire			●	●	●	●	●	●	●	●
T2JH*	T2JV*	Proximity		●	1-color LED off-delay	2-wire	●	●	●	●	●	●	●	●	●	●

* Lead wire length	
Blank	1 m (standard)
3	3 m (option)
5	5 m (option) *11

Ⓖ Switch quantity	
R	1 on rod side
H	1 on head side
D	2

Ⓗ Option

	Bore size (mm)	12	16	20	25	32	40	50	63	80	100
Blank	Rod end female thread	●	●	●	●	●	●	●	●	●	●
N	Rod end male thread	●	●	●	●	●	●	●	●	●	●
P6	Copper and PTFE free specifications	Supported as standard							●	●	●
M *4	Piston rod material (stainless steel)	●	●	●	●	●	●	●	●	●	●
P4	Specifications for rechargeable battery (made to order)	●	●	●	●	●	●	●	●	●	●
P40	Specifications for rechargeable battery (made to order)	●	●	●	●	●	●	●	●	●	●

Ⓘ Mounting bracket	
Blank	Without mounting bracket
LB	Axial foot
FA	Rod side flange

Ⓙ Accessory (available when rod end male thread "N" is selected)	
I	Rod eye
Y	Rod clevis (pin and snap ring included)

[Stroke table]

Stroke (mm)		Applicable bore size									
		12	16	20	25	32	40	50	63	80	100
Standard stroke	5	●	●	●	●	●	●				
	10	●	●	●	●	●	●	●	●	●	●
	15	●	●	●	●	●	●	●	●	●	●
	20	●	●	●	●	●	●	●	●	●	●
	25	●	●	●	●	●	●	●	●	●	●
	30	●	●	●	●	●	●	●	●	●	●
	35			●	●	●	●	●	●	●	●
	40			●	●	●	●	●	●	●	●
	45			●	●	●	●	●	●	●	●
	50			●	●	●	●	●	●	●	●
	75					●	●	●	●	●	●
	100					●	●	●	●	●	●
Min. stroke (mm) *1		1									
Max. stroke (mm)		30		50		100					
Custom stroke *2		-				In 5 mm increments					

***1: Less than 5 mm for 1-color LED switch and less than 10 mm for the 2-color LED, off-delay, AC magnetic field proof, T1* or T8* switch are not available. Refer to page 868 for the min. stroke with switch.**

*2: Available only for more than 50 mm stroke.

How to order mounting brackets

Bore size (mm) / Mounting bracket	ø12	ø16	ø20	ø25	ø32	ø40	ø50
Foot (LB)	SSD2-LB-12	SSD2-LB-16	SSD2-LB-20	SSD2-LB-25	SSD2-LB-32	SSD2-LB-40	SSD2-LB-50
Flange (FA)	SSD2-FA-12	SSD2-FA-16	SSD2-FA-20	SSD2-FA-25	SSD2-FA-32	SSD2-FA-40	SSD2-FA-50

Bore size (mm) / Mounting bracket	ø63	ø80	ø100
Foot (LB)	SSD2-LB-63	SSD2-LB-80	SSD2-LB-100
Flange (FA)	SSD2-FA-63	SSD2-FA-80	SSD2-FA-100

*1: The foot mounting bracket is provided as 2 pcs./set.

Internal structure and parts list (ø12 to 50) (no cushion)

● SSD2-DL-12 to 50 (double acting/double rod/with switch)

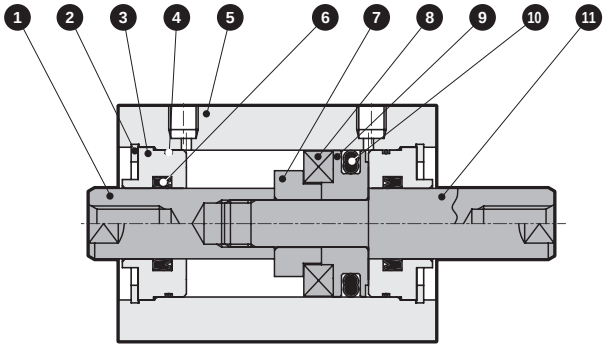

● SSD2-D-12 to 50 (double acting/double rod)

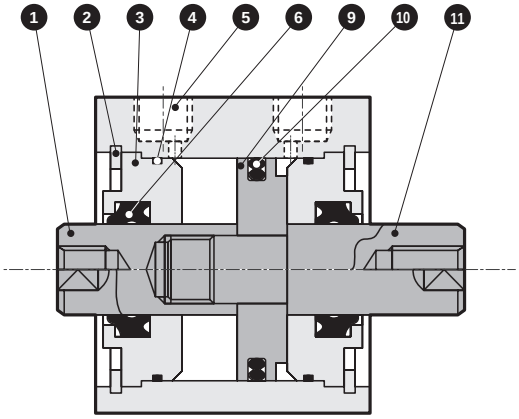

No.	Part name	Material	Remarks	No.	Part name	Material	Remarks
1	Piston rod Ⓐ	ø12 to ø25: Stainless steel ø32 to ø50: Steel	ø16 to ø50: Industrial chrome plating	7	Spacer	ø12, ø20, ø32, ø40: Aluminum alloy ø16, ø25, ø50: Special resin	ø12, 20, 32, 40: Chromate
2	C-snap ring	Steel	Zinc phosphate	8	Magnet	Plastic	
3	Rod metal	Special aluminum	Alumite	9	Piston	Aluminum alloy	Chromate
4	Rod metal gasket	Nitrile rubber		10	Piston packing	Nitrile rubber	
5	Body	Aluminum alloy	Hard alumite	11	Piston rod Ⓑ	ø12 to ø25: Stainless steel ø32 to ø50: Steel	ø16 to ø50: Industrial chrome plating
6	Rod packing	Nitrile rubber					

Repair parts list

Bore size (mm)	Kit No.	Repair parts No.
ø12	SSD2-D-12K	❹ ❻ ❿
ø16	SSD2-D-16K	
ø20	SSD2-D-20K	
ø25	SSD2-D-25K	
ø32	SSD2-D-32K	
ø40	SSD2-D-40K	
ø50	SSD2-D-50K	

Internal structure and parts list (ø63 to 100) (no cushion)

● SSD2-DL-63 to 100 (double acting/double rod/with switch)

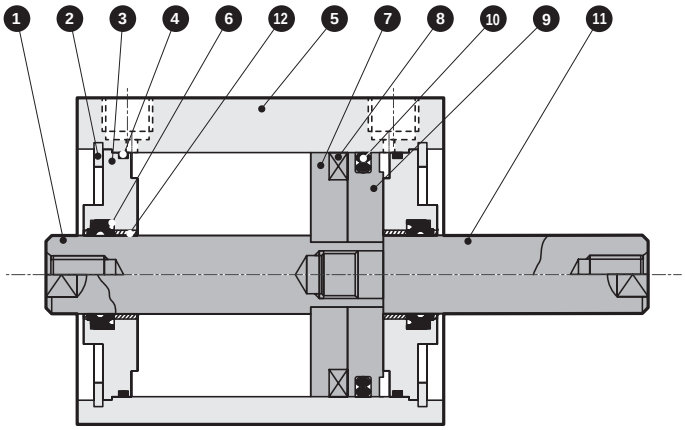

● SSD2-D-63 to 100 (double acting/double rod)

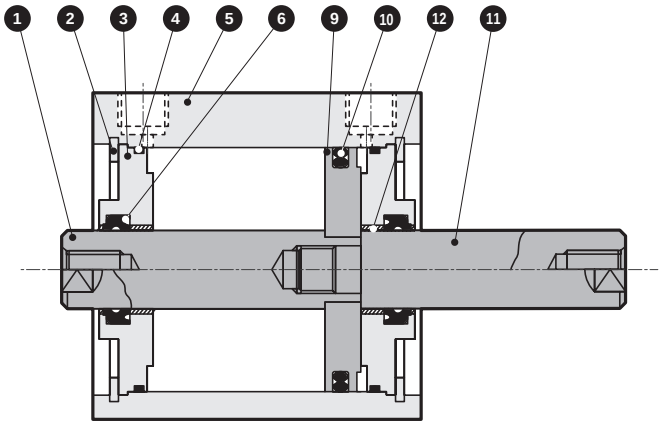

No.	Part name	Material	Remarks	No.	Part name	Material	Remarks
1	Piston rod Ⓐ	Steel	Industrial chrome plating	7	Spacer	Aluminum alloy	Chromate
2	C-snap ring	Steel	Zinc phosphate	8	Magnet	Plastic	
3	Rod metal	Aluminum alloy	Alumite	9	Piston	Aluminum alloy	Chromate
4	Rod metal gasket	Nitrile rubber		10	Piston packing	Nitrile rubber	
5	Body	Aluminum alloy	Hard alumite	11	Piston rod Ⓑ	Steel	Industrial chrome plating
6	Rod packing	Nitrile rubber		12	Bush	Oiles drymet	*1

*1: Material is steel for copper and PTFE free specifications.

Repair parts list

Bore size (mm)	Kit No.	Repair parts No.
ø63	SSD2-D-63K	4 6 10
ø80	SSD2-D-80K	
ø100	SSD2-D-100K	

Internal structure and parts list (ø12 to 50) (with rubber cushion)

● SSD2-DL-12D to 50D (double acting/double rod/with switch)

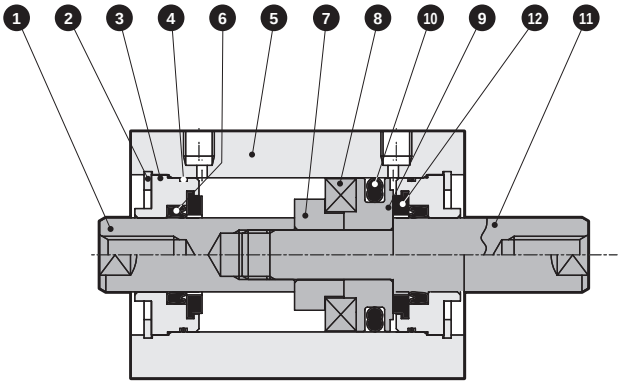

● SSD2-D-12D to 50D (double acting/double rod)

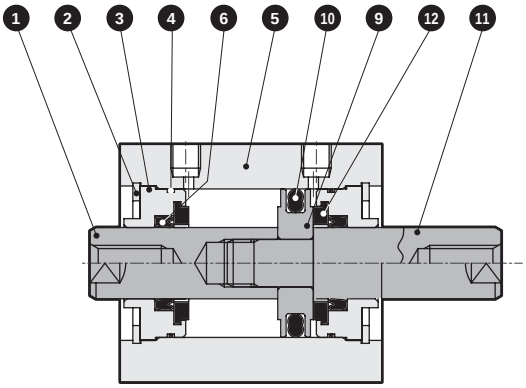

No.	Part name	Material	Remarks
1	Piston rod Ⓐ	ø12 to ø25: Stainless steel ø32 to ø50: Steel	ø16 to ø50: Industrial chrome plating
2	C-snap ring	Steel	Zinc phosphate
3	Rod metal	Special aluminum	Alumite
4	Rod metal gasket	Nitrile rubber	
5	Body	Aluminum alloy	Hard alumite
6	Rod packing	Nitrile rubber	
7	Spacer	ø12, ø20, ø32, ø40: Aluminum alloy ø16, ø25, ø50: Special resin	ø12, 20, 32, 40: Chromate

No.	Part name	Material	Remarks
8	Magnet	Plastic	
9	Piston	Aluminum alloy	Chromate
10	Piston packing	Nitrile rubber	
11	Piston rod Ⓑ	ø12 to ø25: Stainless steel ø32 to ø50: Steel	ø16 to ø50: Industrial chrome plating
12	Cushion rubber	Urethane rubber	

Repair parts list

Bore size (mm)	Kit No.	Repair parts No.
ø12	SSD2-D-12DK	4 6 10 12
ø16	SSD2-D-16DK	
ø20	SSD2-D-20DK	
ø25	SSD2-D-25DK	
ø32	SSD2-D-32DK	
ø40	SSD2-D-40DK	
ø50	SSD2-D-50DK	

Internal structure and parts list (ø63 to 100) (with rubber cushion)

● SSD2-DL-63D to 100D (double acting/double rod/with switch)

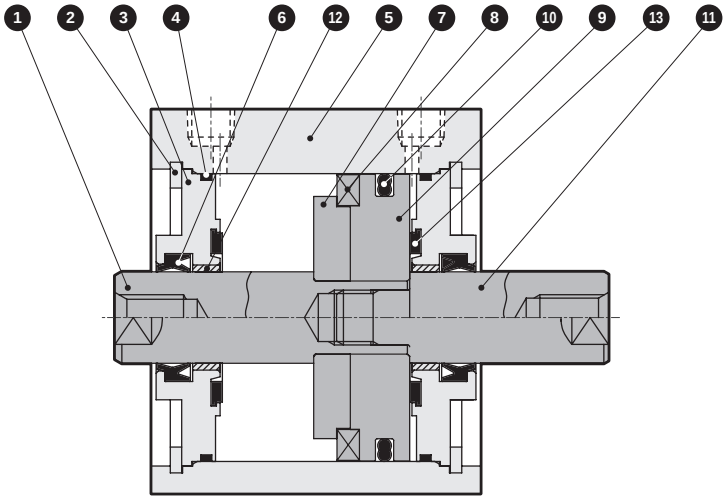

● SSD2-D-63D to 100D (double acting/double rod)

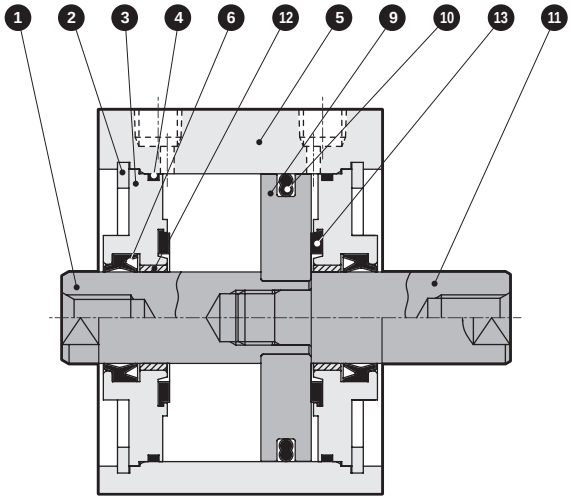

No.	Part name	Material	Remarks	No.	Part name	Material	Remarks
1	Piston rod Ⓐ	Steel	Industrial chrome plating	8	Magnet	Plastic	
2	C-snap ring	Steel	Zinc phosphate	9	Piston	Aluminum alloy	Chromate
3	Rod metal	Aluminum alloy	Alumite	10	Piston packing	Nitrile rubber	
4	Rod metal gasket	Nitrile rubber		11	Piston rod Ⓑ	Steel	Industrial chrome plating
5	Body	Aluminum alloy	Hard alumite	12	Bush	Oiles drymet	*1
6	Rod packing	Nitrile rubber		13	Cushion rubber	Urethane rubber	
7	Spacer	Aluminum alloy	Chromate				

*1: Material is steel for copper and PTFE free specifications.

Repair parts list

Bore size (mm)	Kit No.	Repair parts No.
ø63	SSD2-D-63DK	4 6 10 13
ø80	SSD2-D-80DK	
ø100	SSD2-D-100DK	

SCP*3
CMK2
CMA2
SCM
SCG
SCA2
SCS2
CKV2
CAV2/COVP/N2
SSD2
SSG
SSD
CAT
MDC2
MVC
SMG
MSD/MSDG
FC*
STK
SRL3
SRG3
SRM3
SRT3
MRL2
MRG2
SM-25
ShkAbs
FJ
FK
Spd Contr
Ending

Dimensions

● SSD2-DL-12 to 25 (with switch)

ø12/ø16

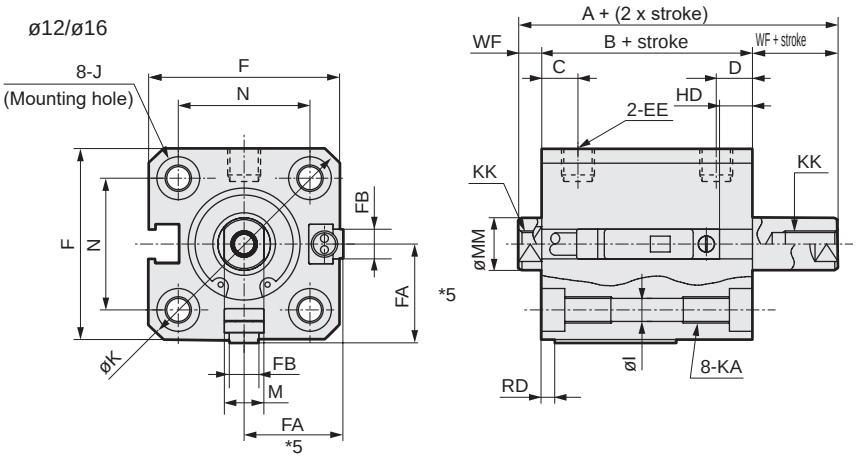

● Rod end male thread

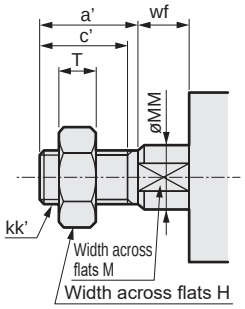

ø20/ø25

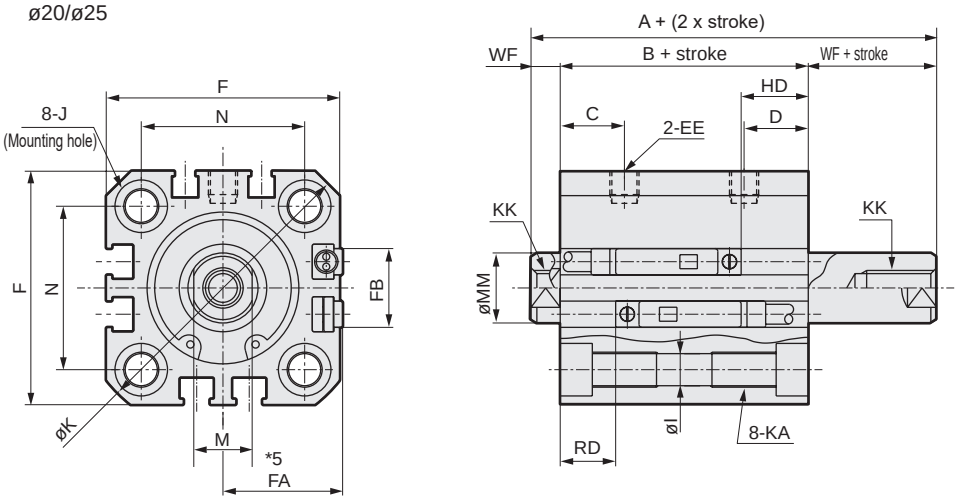

Note: The positions for the left and right widths across flats are unspecified.

Code / Bore size (mm)	Common dimensions with switch																
	A	B	C	D	EE	F	FA *5	FB	I	J	K	KA	KK	M	MM	N	WF
ø12	34	27	5.5	5.5	M5	25	13(16.5)	4.5	3.5	6.5 spot face depth 3.5	32	M4 depth 7	M3 depth 6	5	6	15.5	3.5
ø16	34	27	5.5	5.5	M5	29	15(18.5)	4.5	3.5	6.5 spot face depth 3.5	38	M4 depth 7	M4 depth 8	6	8	20	3.5
ø20	45	36	8	8	M5	36	18.5(22)	12.5	5.5	9 spot face depth 5.5	47	M6 depth 11	M5 depth 7	8	10	25.5	4.5
ø25	49	39	11	11	M5	40	20.5(24)	13.5	5.5	9 spot face depth 5.5	51	M6 depth 11	M6 depth 12	10	12	28	5

Switch dimensions / Bore size (mm)	Reed T0H/T0V, T5H/T5V *6		Proximity T2H/T2V, T3H/T3V *6		Proximity T2WH/T2WV, T3WH/T3WV *6		Proximity F2H/F2V, F3H/F3V, F2YH/F2YV, F3YH/F3YV		Proximity F2S/F3S	
	HD	RD	HD	RD	HD	RD	HD	RD	HD	RD
ø12	5.5	3	5.5	3	7.5	4.5				
ø16	5	2	5	2	6.5	3.5				
ø20	10	7.5	10	7.5	11.5	9.5	14	12	13	11
ø25	11.5	9.5	11.5	9.5	11.5	11	15	13	14	12

*1 : Only F-switch is available for the ø20 or ø25 piping port surface.
*2 : HD and RD dimensions for 5 mm stroke differ from these dimensions according to the setting.
3 : Refer to page 1044 for HD, RD and protruding dimensions of the 2-color LED, off-delay, AC magnetic field proof, T1 and T8* switches.
*4 : Dimensions in ( ) of FA are for the L-shaped lead wire.
*5 : For dimensions of individual accessories, refer to pages 1046 to 1049.
*6 : The RD side can be identified with a mark on the port surface of the body.

● Dimensions of rod end male thread part

Code / Bore size (mm)	a'	c'	H	kk'	M	MM	T	wf
ø12	10.5	9	8	M5	5	6	3.2	3.5
ø16	12	10	10	M6	6	8	3.6	3.5
ø20	14	12	13	M8	8	10	5	4.5
ø25	17.5	15	17	M10x1.25	10	12	6	5

Dimensions with mounting bracket

● Axial foot (LB) with switch
SSD2-DL-12 to 25 -LB

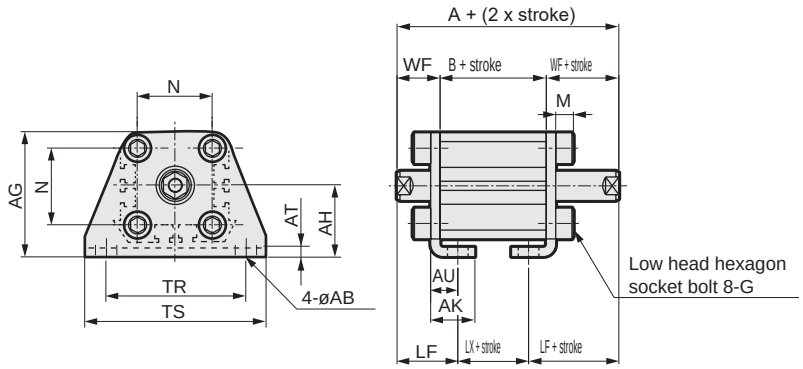

Rod end male thread

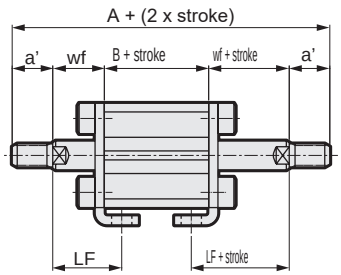

Code	Common dimensions										
Bore size (mm)	AB	AG	AH	AK	AT	AU	G	N	TR	TS	M
ø12	5	29.5	17	12.5	2	8	M4x10	15.5	34	44	4.8
ø16	5	33.5	19	13	2	8	M4x10	20	38	48	4.8
ø20	7	42	24	15	3.2	9.2	M6x16	25.5	48	62	7.2
ø25	7	46	26	16.5	3.2	10.7	M6x16	28	52	66	7.2

Code	Female thread					Male thread					
Bore size (mm)	WF	LF	A	B	LX	a'	wf	LF	A	B	LX
ø12	13.5	19.5	54	27	15	10.5	13.5	19.5	75	27	15
ø16	13.5	19.5	54	27	15	12	13.5	19.5	78	27	15
ø20	14.5	20.5	65	36	24	14	14.5	20.5	93	36	24
ø25	15	22.5	69	39	24	17.5	15	22.5	104	39	24

● Rod side flange (FA) with switch
SSD2-DL-12 to 25 -FA

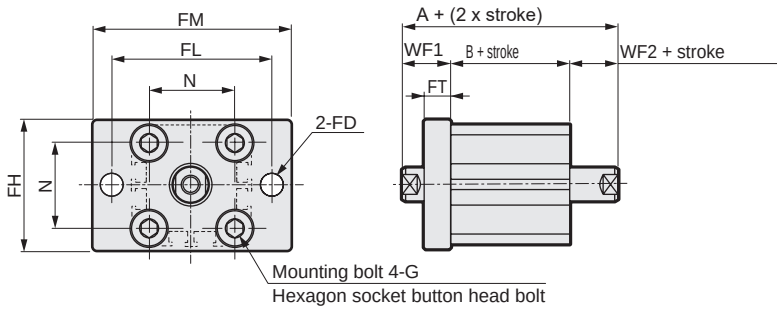

Rod end male thread

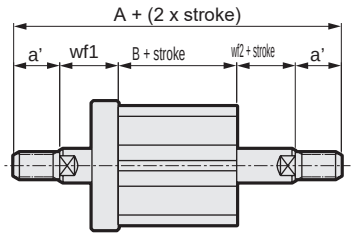

Code	Common dimensions							Female thread				Male thread				
Bore size (mm)	FD	FH	FL	FM	FT	N	G	WF1	WF2	A	B	a'	wf1	wf2	A	B
ø12	4.5	25	45	55	5.5	15.5	M4x12	13.5	3.5	44	27	11	13.5	3.5	65	27
ø16	4.5	30	45	55	5.5	20	M4x12	13.5	3.5	44	27	12	13.5	3.5	68	27
ø20	6.6	39	48	60	8	25.5	M6x16	14.5	4.5	55	36	14	14.5	4.5	83	36
ø25	6.6	42	52	64	8	28	M6x16	15	5	59	39	18	15	5	94	39

SCP*3
CMK2
CMA2
SCM
SCG
SCA2
SCS2
CKV2
CAV2/COVP/N2
SSD2
SSG
SSD
CAT
MDC2
MVC
SMG
MSD/MSDG
FC*
STK
SRL3
SRG3
SRM3
SRT3
MRL2
MRG2
SM-25
ShkAbs
FJ
FK
Spd Contr
Ending

Dimensions

● SSD2-D-12 to 25 (without switch)

ø12/ø16

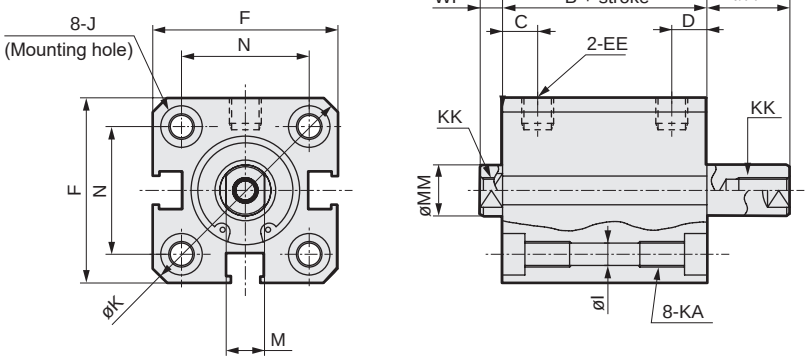

● Rod end male thread

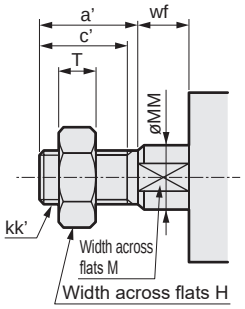

ø20/ø25

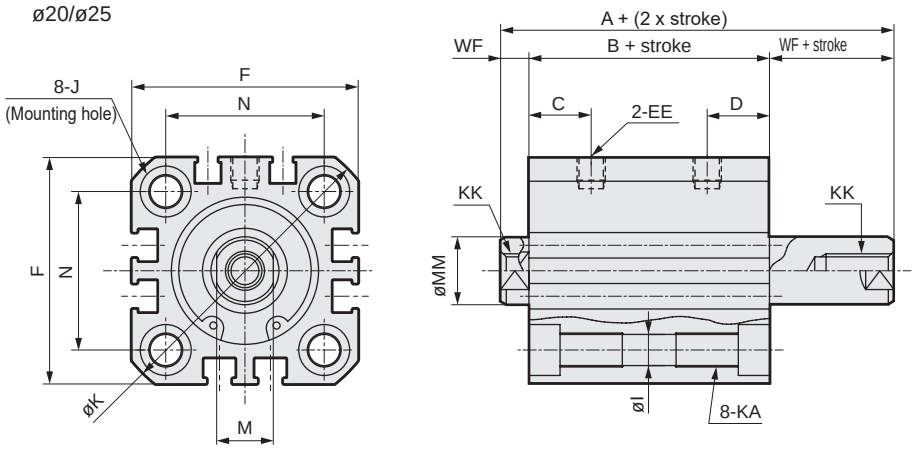

Note: The positions for the left and right widths across flats are unspecified.

Code / Bore size (mm)	Dimensions without switch and common dimensions														
	A	B	C	D	EE	F	I	J	K	KA	KK	M	MM	N	WF
ø12	29	22	5.5	5.5	M5	25	3.5	6.5 spot face depth 3.5	32	M4 depth 7	M3 depth 6	5	6	15.5	3.5
ø16	29	22	5.5	5.5	M5	29	3.5	6.5 spot face depth 3.5	38	M4 depth 7	M4 depth 8	6	8	20	3.5
ø20	35	26	8	8	M5	36	5.5	9 spot face depth 5.5	47	M6 depth 11	M5 depth 7	8	10	25.5	4.5
ø25	39	29	11	11	M5	40	5.5	9 spot face depth 5.5	51	M6 depth 11	M6 depth 12	10	12	28	5

● Dimensions of rod end male thread part

Code / Bore size (mm)	a'	c'	H	kk'	M	MM	T	wf
ø12	10.5	9	8	M5	5	6	3.2	3.5
ø16	12	10	10	M6	6	8	3.6	3.5
ø20	14	12	13	M8	8	10	5	4.5
ø25	17.5	15	17	M10x1.25	10	12	6	5

*1: For dimensions of individual accessories, refer to pages 1046 to 1049.

Dimensions with mounting bracket

● Axial foot (LB) without switch
SSD2-D-12 to 25 -LB

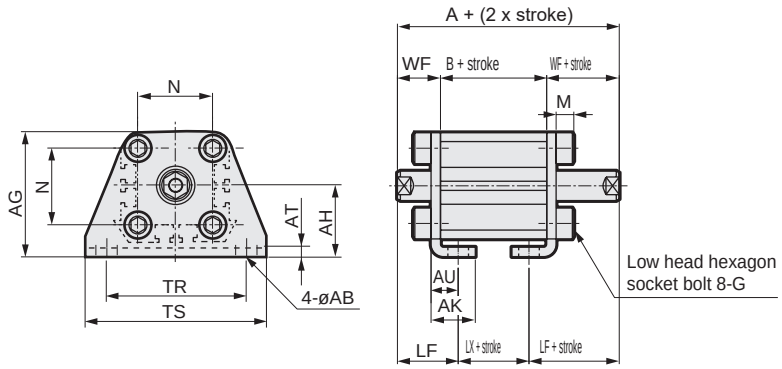

Rod end male thread

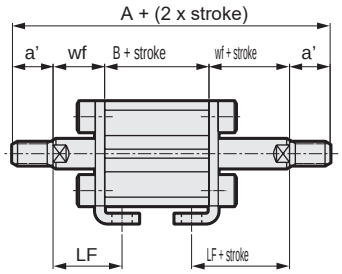

Code	Common dimensions										
Bore size (mm)	AB	AG	AH	AK	AT	AU	G	N	TR	TS	M
ø12	5	29.5	17	12.5	2	8	M4x10	15.5	34	44	4.8
ø16	5	33.5	19	13	2	8	M4x10	20	38	48	4.8
ø20	7	42	24	15	3.2	9.2	M6x16	25.5	48	62	7.2
ø25	7	46	26	16.5	3.2	10.7	M6x16	28	52	66	7.2

Code	Female thread					Male thread					
Bore size (mm)	WF	LF	A	B	LX	a'	wf	LF	A	B	LX
ø12	13.5	19.5	49	22	10	10.5	13.5	19.5	70	22	10
ø16	13.5	19.5	49	22	10	12	13.5	19.5	73	22	10
ø20	14.5	20.5	55	26	14	14	14.5	20.5	83	26	14
ø25	15	22.5	59	29	14	17.5	15	22.5	94	29	14

● Rod side flange (FA) without switch
SSD2-D-12 to 25 -FA

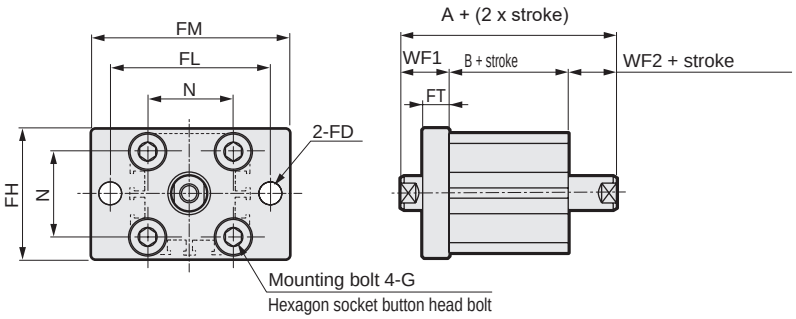

Rod end male thread

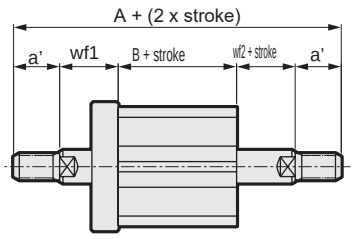

Code	Common dimensions							Female thread				Male thread				
Bore size (mm)	FD	FH	FL	FM	FT	N	G	WF1	WF2	A	B	a'	wf1	wf2	A	B
ø12	4.5	25	45	55	5.5	15.5	M4x12	13.5	3.5	39	22	11	13.5	3.5	60	22
ø16	4.5	30	45	55	5.5	20	M4x12	13.5	3.5	39	22	12	13.5	3.5	63	22
ø20	6.6	39	48	60	8	25.5	M6x16	14.5	4.5	45	26	14	14.5	4.5	73	26
ø25	6.6	42	52	64	8	28	M6x16	15	5	49	29	18	15	5	84	29

SCP*3
CMK2
CMA2
SCM
SCG
SCA2
SCS2
CKV2
CAV2/COVP/N2
SSD2
SSG
SSD
CAT
MDC2
MVC
SMG
MSD/MSDG
FC*
STK
SRL3
SRG3
SRM3
SRT3
MRL2
MRG2
SM-25
ShkAbs
FJ
FK
Spd Contr
Ending

Dimensions

● SSD2-DL-32 to 100 (with switch)

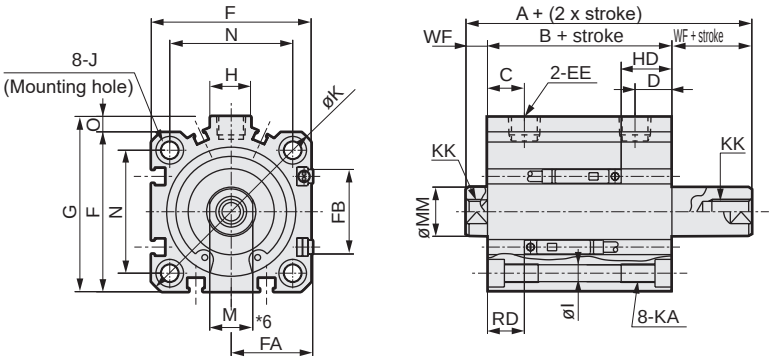

● Rod end male thread

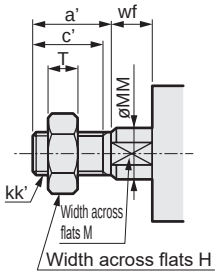

● SSD2-D-32 to 100 (without switch)

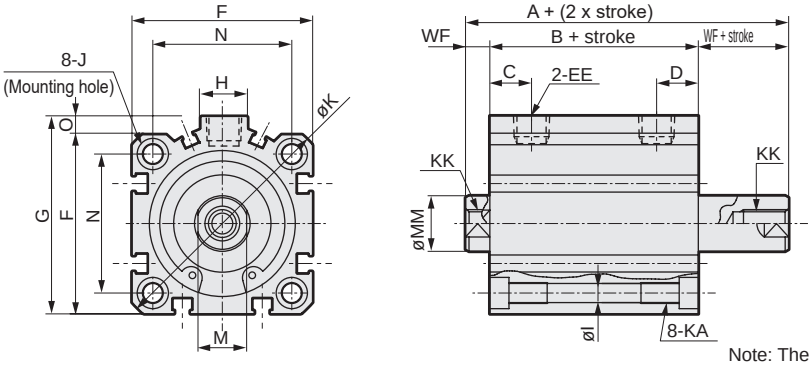

Note: The positions for the left and right widths across flats are unspecified.

Code / Bore size (mm)	No switch		Common dimensions with switch														
	A *2, *8	B *3, *8	A *2	B *3	C *10	D *10	EE *9	F	FA *6	FB	G	H	I	J	K	KA	KK
ø32	44.5(54.5)	30.5(40.5)	54.5	40.5	8(10)	8(5.5)	Rc1/8	45	23(26.5)	20.5	49.5	12.5	5.5	9 spot face depth 5.5	60	M6 depth 11	M8 depth 13
ø40	54(64)	40(50)	64	50	12(11.4)	12(7.8)	Rc1/8	52	26.5(30)	27.5	57	15	5.5	9 spot face depth 5.5	69	M6 depth 11	M8 depth 13
ø50	56.5(66.5)	40.5(50.5)	66.5	50.5	10.5	10.5	Rc1/4	64	32.5(36)	28.5	71	18	6.9	11 spot face depth 6.5	86	M8 depth 13	M10 depth 15
ø63	58(68)	42(52)	68	52	13	13	Rc1/4	77	39(42.5)	28.5	84	23	8.7	14 spot face depth 9	103	M10 depth 25	M10 depth 15
ø80	71(81)	51(61)	81	61	16	16	Rc3/8	98	49.5(53)	28.5	104	31	10.5	17.5 spot face depth 11	132	M12 depth 28	M16 depth 21
ø100	84.5(94.5)	60.5(70.5)	94.5	70.5	23	23	Rc3/8	117	59(62.5)	28.5	123.5	38	10.5	17.5 spot face depth 11	156	M12 depth 28	M20 depth 27

Code / Bore size (mm)	Common dimensions with switch					Switch dimensions					
						Reed T0H/T0V, T5H/T5V		Proximity T2H/T2V, T3H/T3V		Proximity T2WH/T2WV, T3WH/T3WV	
	M	MM	N	O	WF	HD *4	RD *4	HD *4	RD *4	HD	RD
ø32	14	16	34	4.5	7	11	9	11	9	12.5	10.5
ø40	14	16	40	5	7	16.5	12	16.5	12	18	13.5
ø50	17	20	50	7	8	16.5	12.5	16.5	12.5	18	14
ø63	17	20	60	7	8	18	13	18	13	19.5	14.5
ø80	22	25	77	6	10	23	15.5	23	15.5	24.5	17
ø100	27	30	94	6.5	12	28.5	19.5	28.5	19.5	30	21

*1 : Custom stroke is available only for more than 50 mm strokes.
*2 : To calculate A + (2 x stroke) when using a custom stroke, apply "A + next longer standard stroke + custom stroke".
(Example) If the custom stroke is 70 mm, apply "A + standard stroke 75 mm + custom stroke 70 mm".
*3 : To calculate B + stroke when using custom stroke, apply the next longer standard stroke instead of the custom stroke.
(Example) If the custom stroke is 70 mm, apply the standard stroke 75 mm.
*4 : HD and RD dimensions for 5 mm stroke differ from these dimensions according to the setting.
5 : Refer to page 1044 for HD, RD and protruding dimensions of the 2-color LED, off-delay, AC magnetic field proof, T1 and T8* switches.
*6 : Dimensions in ( ) of FA are for the L-shaped lead wire.
*7 : For dimensions of individual accessories, refer to pages 1046 to 1049.
*8 : Dimensions in ( ) of codes A and B are for strokes of more than 50 mm.
*9 : The ø32 bore size with a 5 mm stroke and without a switch has a port size of M5.*10 : Dimensions in ( ) of codes C and D are when the value is for a 5 mm stroke without switch.
*11 : The RD side can be identified with a mark on the port surface of the body.

● Dimensions of rod end male thread part

Code / Bore size (mm)	a'	c'	H	kk'	M	MM	T	wf
ø32	23.5	20.5	22	M14x1.5	14	16	8	5
ø40	23.5	20.5	22	M14x1.5	14	16	8	5
ø50	28.5	26	27	M18x1.5	17	20	11	5
ø63	28.5	26	27	M18x1.5	17	20	11	5
ø80	35.5	32.5	32	M22x1.5	22	25	13	8
ø100	35.5	32.5	41	M26x1.5	27	30	16	8

Dimensions with mounting bracket

CAD

● Axial foot (LB)
SSD2-D(L)-32 to 100 -LB

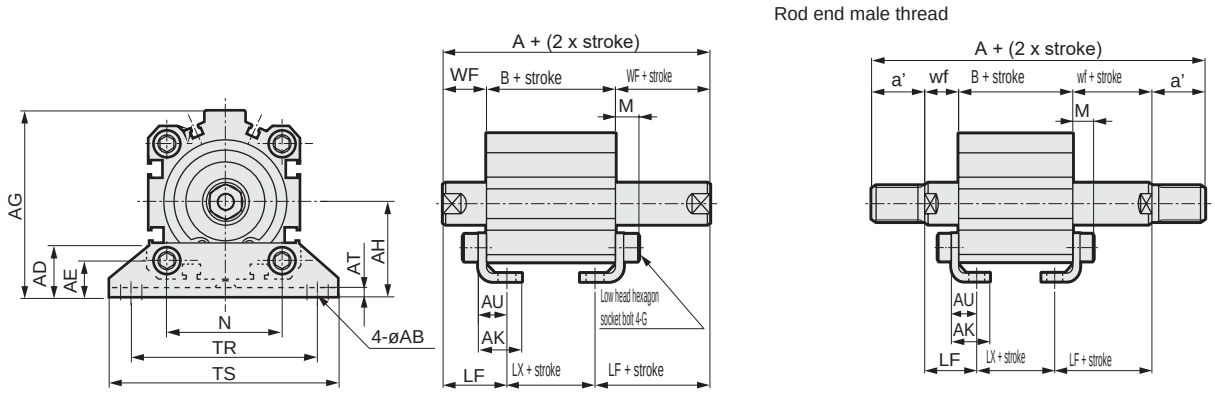

Code / Bore size (mm)	Common dimensions												
	AB	AD	AE	AG	AH	AK	AT	AU	G	N	TR	TS	M
ø32	7	18.5	13	57	30	17	3.2	11.2	M6x16	34	57	71	7.2
ø40	7	18	13	64	33	18.2	3.2	11.2	M6x16	40	64	78	7.2
ø50	9	22	14	78	39	22.7	3.2	14.7	M8x20	50	79	95	8.2
ø63	11	26	16	91.5	46	25.2	3.2	16.2	M10x25	60	95	113	9.2
ø80	13	31.5	20.5	114	59	30.5	4.5	19.5	M12x40	77	118	140	11.5
ø100	13	35	24	136	71	35.5	6	23	M12x40	94	137	162	13

Code / Bore size (mm)	Female thread								Male thread								
	WF	LF	No switch			With switch			a'	wf	LF	No switch			With switch		
			A	B	LX	A	B	LX				A	B	LX	A	B	LX
ø32	17	25	64.5(74.5)	30.5(40.5)	14.5(24.5)	74.5	40.5	24.5	23.5	15	23	107.5(117.5)	30.5(40.5)	14.5(24.5)	117.5	40.5	24.5
ø40	17	25	74(84)	40(50)	24(34)	84	50	34	23.5	15	23	117(127)	40(50)	24(34)	127	50	34
ø50	18	29.5	76.5(86.5)	40.5(50.5)	17.5(27.5)	86.5	50.5	27.5	28.5	15	26.5	127.5(137.59)	40.5(50.5)	17.5(27.5)	137.5	50.5	27.5
ø63	18	31	78(88)	42(52)	16(26)	88	52	26	28.5	15	28	129(139)	42(52)	16(26)	139	52	26
ø80	20	35	91(101)	51(61)	21(31)	101	61	31	35.5	18	33	158(168)	51(61)	21(31)	168	61	31
ø100	22	39	104.5(114.5)	60.5(70.5)	26.5(36.5)	115	70.5	36.5	35.5	18	35	167.5(177.5)	60.5(70.5)	26.5(36.5)	177.5	70.5	36.5

* Dimensions in ( ) are for strokes of more than 50 mm.
Note: ø80: LB cannot be selected when B + stroke is 72 or less.

● Rod side flange (FA)
SSD2-D(L)-32 to 100 -FA

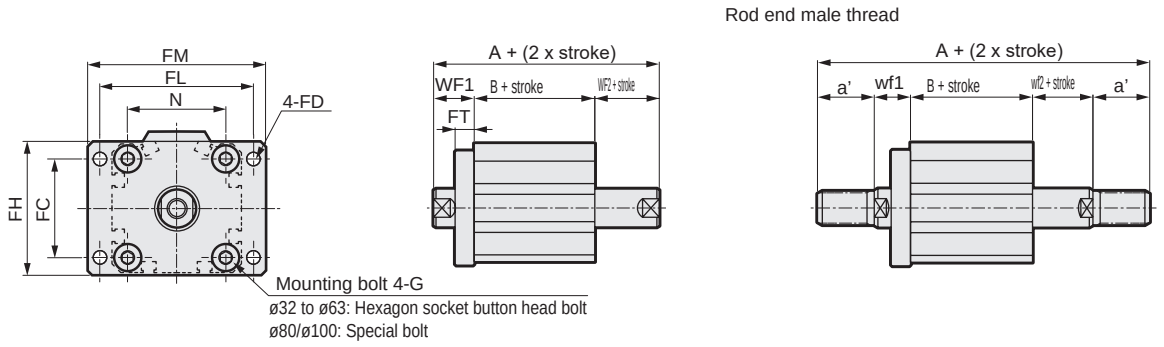

Code / Bore size (mm)	Common dimensions								Female thread						Male thread							
	FC	FD	FH	FL	FM	FT	N	G	WF1	WF2	No switch		With switch		a'	wf1	wf2	No switch		With switch	
											A	B	A	B				A	B	A	B
ø32	34	5.5	48	56	65	8	34	M6x16	17	7	54.5(64.5)	30.5(40.5)	64.5	40.5	24	15	5	97.5(107.5)	30.5(40.5)	107.5	40.5
ø40	40	5.5	54	62	72	8	40	M6x16	17	7	64(74)	40(50)	74	50	24	15	5	107(117)	40(50)	117	50
ø50	50	6.6	67	76	89	9	50	M8x20	18	8	66.5(76.5)	40.5(50.5)	76.5	50.5	29	15	5	117.5(127.5)	40.5(50.5)	127.5	50.5
ø63	60	9	80	92	108	9	60	M10x25	18	8	68(78)	42(52)	78	52	29	15	5	119(129)	42(52)	129	52
ø80	77	11	99	116	134	11	77	M12x40	20	10	81(91)	51(61)	91	61	36	18	8	148(158)	51(61)	158	61
ø100	94	11	117	136	154	11	94	M12x40	22	12	94.5(104.5)	60.5(70.5)	104.5	70.5	36	18	8	157.5(167.5)	60.5(70.5)	167.5	70.5

* Dimensions in ( ) are for strokes of more than 50 mm.

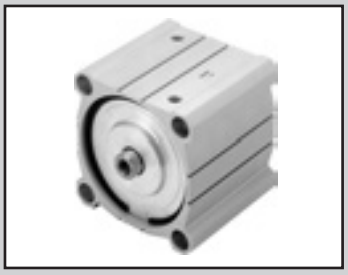

Compact cylinder double acting/double rod (large bore size)

SSD2-D Series

● Bore size: ø125/ø140/ø160/ø180/ø200

JIS symbol

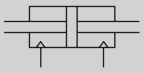

RoHS CAD

Specifications

Item	SSD2-D SSD2-DL (with switch)				
Bore size mm	ø125	ø140	ø160	ø180	ø200
Actuation	Double acting/double rod				
Working fluid	Compressed air				
Max. working pressure MPa	1.0 (≈150 psi, 10 bar)			0.7 (≈100 psi, 7 bar)	
Min. working pressure MPa	0.05 (≈7.3 psi, 0.5 bar)				
Proof pressure MPa	1.6 (≈230 psi, 16 bar)			1.05 (≈150 psi, 10.5 bar)	
Ambient temperature °C	-10 (14°F) to 60 (140°F) (no freezing)				
Port size	Rc3/8			Rc1/2	
Stroke tolerance mm	+2.0 0				
Working piston speed mm/s	50 to 300			20 to 300	
Cushion	With rubber cushion (standard)				
Lubrication	Not required (use turbine oil ISO VG32 if necessary for lubrication)				
Allowable absorbed energy J	6.52	6.52	7.78	12.4	

Stroke

Bore size (mm)	Standard stroke (mm)	Max. stroke (mm)	Min. stroke (mm)
ø125	10, 20, 30, 40, 50 75, 100, 125, 150 175, 200, 250, 300	300	10
ø140			
ø160			
ø180			
ø200			

*1: Total length dimension with custom stroke is handled as custom stroke dedicated length.
*2: When using the type with switch, refer to the table below.

Number of installed switches and min. stroke (mm)

Switch quantity	1	2	3	4	5
Switch model No. / Bore size (mm)	T*	T*	T*	T*	T*
ø125	10	10	40	55	70
ø140	10	10	40	55	70
ø160	10	10	40	55	70
ø180	10	10	40	55	70
ø200	10	10	40	55	70

Switch specifications

● 1-color/2-color LED/for AC magnetic field proof

Item	2-wire proximity	2-wire proximity			3-wire proximity				2-wire reed							2-wire proximity
	T1H/ T1V	T2H/T2V/ T2JH/T2JV	T2YH/ T2YV	T2WH/ T2WV	T3H/ T3V	T3PH/ T3PV	T3YH/ T3YV	T3WH/ T3WV	T0H/T0V		T5H/T5V		T8H/T8V			T2YD(*4) T2YDT
Applications	For programmable controller, relay, compact solenoid valve	Dedicated for programmable controller			For programmable controller, relay				For programmable controller, relay		For programmable controller, relay, IC circuit (no indicator lamp), serial connection		For programmable controller, relay			For programmable controller
Output method	-				NPN output	PNP output	NPN output	NPN output	-							
Pwr. supp. V.	-				10 to 28 VDC				-							
Load voltage	85 to 265 VAC	10 to 30 VDC		24 VDC ±10%	30 VDC or less				12/24 VDC	100/110 VAC	5/12/24 VDC	100/110 VAC	12/24 VDC	110 VAC	220 VAC	24 VDC ±10%
Load current	5 to 100 mA	5 to 20 mA (*3)			100 mA or less		50 mA or less		5 to 50 mA	7 to 20 mA	50 mA or less	20 mA or less	5 to 50 mA	7 to 20 mA	7 to 10 mA	5 to 20 mA
Indicator	LED (Lit when ON)	LED (Lit when ON)	Red/green LED (Lit when ON)	Red/green LED (Lit when ON)	LED (Lit when ON)	Yellow LED (Lit when ON)	Red/green LED (Lit when ON)	Red/green LED (Lit when ON)	LED (Lit when ON)		No indicator lamp		LED (Lit when ON)			Red/green LED (Lit when ON)
Leakage current	≤ 1 mA at 100 VAC, ≤ 2 mA at 200 VAC	1 mA or less			10 μA or less				0 mA							1 mA or less
Weight g	1 m:33 3 m:87 5 m:142	1 m:18 3 m:49 5 m:80	1 m:33 3 m:87 5 m:142	1 m:18 3 m:49 5 m:80	1 m:18 3 m:49 5 m:80		1 m:33 3 m:87 5 m:142	1 m:18 3 m:49 5 m:80	1 m:18 3 m:49 5 m:80				1 m:33 3 m:87 5 m:142			1 m:61 3 m:166 5 m:272

*1 : Refer to Ending Page 1 for detailed switch specifications and dimensions.
*2 : Switches other than the above models, such as switches with connectors, are also available. Refer to Ending Page 1.
*3 : The max. load current is 20 mA at 25°C. The current is lower than 20 mA if the operating ambient temperature around the switch is higher than 25˚C. (5 to 10 mA at 60°C)
*4 : Switch for AC magnetic field (T2YD/T2YDT) cannot be used in DC magnetic field.
*5 : The F-switch uses a bend-resistant lead wire.

Cylinder weight table (the weight of the switches is when there are 2 cylinder switches.)

(Unit: kg)

Stroke (mm)	10		20		30		40		50		75		100	
Bore size (mm)	No switch	With switch	No switch	With switch	No switch	With switch	No switch	With switch	No switch	With switch	No switch	With switch	No switch	With switch
ø125	4.64	4.74	4.98	5.08	5.32	5.42	5.66	5.76	6.00	6.10	6.85	6.95	7.70	7.80
ø140	6.62	6.73	7.00	7.11	7.38	7.49	7.77	7.88	8.15	8.26	9.00	9.11	10.07	10.18
ø160	9.10	9.22	9.58	9.70	10.06	10.18	10.54	10.66	11.02	11.14	12.22	12.34	13.41	13.53
ø180	13.12	13.27	13.62	13.77	14.12	14.27	14.62	14.77	15.12	15.27	16.36	16.51	17.61	17.76
ø200	16.09	16.27	16.65	16.83	17.21	17.39	17.77	17.95	18.33	18.51	19.73	19.91	21.13	21.31

Stroke (mm)	125		150		175		200		250		300	
Bore size (mm)	No switch	With switch	No switch	With switch	No switch	With switch	No switch	With switch	No switch	With switch	No switch	With switch
ø125	8.55	8.65	9.40	9.50	10.25	10.35	11.10	11.20	12.80	12.90	14.50	14.60
ø140	11.02	11.13	11.87	11.98	12.72	12.83	13.57	13.68	15.27	15.38	16.97	17.08
ø160	14.61	14.73	15.81	15.93	17.01	17.13	18.21	18.33	20.61	20.73	23.01	23.13
ø180	18.85	19.00	20.10	20.25	21.35	21.50	22.59	22.74	25.09	25.24	27.58	27.73
ø200	22.53	22.71	23.93	24.11	25.32	25.50	26.72	26.90	29.52	29.70	32.32	32.50

Theoretical thrust table

(Unit: N)

Bore size (mm)	Operating direction	Working pressure MPa										
		0.1	0.15	0.2	0.3	0.4	0.5	0.6	0.7	0.8	0.9	1.0
ø125	Push/Pull	$1.13x10^3$	$1.70x10^3$	$2.26x10^3$	$3.39x10^3$	$4.52x10^3$	$5.65x10^3$	$6.79x10^3$	$7.92x10^3$	$9.05x10^3$	$1.02x10^4$	$1.13x10^4$
ø140	Push/Pull	$1.44x10^3$	$2.16x10^3$	$2.89x10^3$	$4.33x10^3$	$5.77x10^3$	$7.22x10^3$	$8.66x10^3$	$1.01x10^4$	$1.15x10^4$	$1.30x10^4$	$1.44x10^4$
ø160	Push/Pull	$1.88x10^3$	$2.83x10^3$	$3.77x10^3$	$5.65x10^3$	$7.54x10^3$	$9.42x10^3$	$1.13x10^4$	$1.32x10^4$	-	-	-
ø180	Push/Pull	$2.39x10^3$	$3.58x10^3$	$4.77x10^3$	$7.16x10^3$	$9.54x10^3$	$1.19x10^4$	$1.43x10^4$	$1.67x10^4$	-	-	-
ø200	Push/Pull	$3.02x10^3$	$4.52x10^3$	$6.03x10^3$	$9.05x10^3$	$1.21x10^4$	$1.51x10^4$	$1.81x10^4$	$2.11x10^4$	-	-	-

SCP*3
CMK2
CMA2
SCM
SCG
SCA2
SCS2
CKV2
CAV2/COVP/N2
SSD2
SSG
SSD
CAT
MDC2
MVC
SMG
MSD/MSDG
FC*
STK
SRL3
SRG3
SRM3
SRT3
MRL2
MRG2
SM-25
ShkAbs
FJ
FK
Spd Contr
Ending

How to order

No switch (without magnet for switch)

SSD2-D - 125 ○ - 50 ——— N

With switch (built-in magnet for switch)

SSD2-DL - 125 ○ - 50 - T0H - R - N

Ⓐ Bore size
Ⓑ Port thread
Ⓒ Stroke
Ⓓ Switch model No. *1
Ⓔ Switch quantity
Ⓕ Option

Code	Description
Ⓐ Bore size (mm)	
125	ø125
140	ø140
160	ø160
180	ø180
200	ø200
Ⓑ Port thread	
Blank	Rc thread
NN	NPT thread (ø125 to ø160) (made-to-order product)
GN	G thread (ø125 to ø160) (made-to-order product)
Ⓒ Stroke (mm)	
Refer to the stroke table on the following page.	

Ⓓ Switch model No.

Lead wire Straight	Lead wire L-shaped	Contact	Voltage AC	Voltage DC	Indicator	Lead Line
T0H*	**T0V***	Reed	●	●	1-color LED	2-wire
T5H*	**T5V***	Reed	●	●	No indicator lamp	2-wire
T8H*	**T8V***	Reed	●	●	1-color LED	2-wire
T1H*	**T1V***	Proximity	●		1-color LED	2-wire
T2H*	**T2V***	Proximity		●	1-color LED	2-wire
T3H*	**T3V***	Proximity		●	1-color LED	3-wire
T3PH*	**T3PV***	Proximity		●	1-color LED	3-wire
T2WH*	**T2WV***	Proximity		●	2-color LED	2-wire
T2YH*	**T2YV***	Proximity		●	2-color LED	2-wire
T3WH*	**T3WV***	Proximity		●	2-color LED	3-wire
T3YH*	**T3YV***	Proximity		●	2-color LED	3-wire
T2JH*	**T2JV***	Proximity		●	1-color LED off-delay	2-wire
T2YD*	**-**	Proximity		●	2-color LED AC magnetic field	2-wire
T2YDT*	**-**	Proximity		●	2-color LED AC magnetic field	2-wire

*** Lead wire length**	
Blank	1 m (standard)
3	3 m (option)
5	5 m (option)

Ⓔ Switch quantity	
R	1 on rod side
H	1 on head side
D	2

Ⓕ Option	
Blank	Rod end female thread
N	Rod end male thread
P4	Specifications for rechargeable battery (made to order)
P40	

⚠ Precautions for model No. selection

*1: Switches are shipped with the product. Contact CKD if assembling before shipment is necessary.

[Example of model No.]

SSD2-DL-125-50-T0H-R-N

Model: Compact cylinder double acting/double rod

Ⓐ Bore size : 125 mm
Ⓑ Port thread : Rc thread
Ⓒ Stroke : 50 mm
Ⓓ Switch model No. : Reed T0H switch
· Lead wire length 1 m
Ⓔ Switch quantity : 1 on rod side
Ⓕ Option : Rod end male thread

How to order switch

SW - T0H

Switch model No.
(Item Ⓓ above)

[Stroke table]

Stroke (mm)		Applicable bore size				
		ø125	ø140	ø160	ø180	ø200
Standard stroke	10	●	●	●	●	●
	20	●	●	●	●	●
	30	●	●	●	●	●
	40	●	●	●	●	●
	50	●	●	●	●	●
	75	●	●	●	●	●
	100	●	●	●	●	●
	125	●	●	●	●	●
	150	●	●	●	●	●
	175	●	●	●	●	●
	200	●	●	●	●	●
	250	●	●	●	●	●
	300	●	●	●	●	●
Min. stroke (mm) *1		10				
Max. stroke (mm)		300				
Custom stroke *2		In 1 mm increments				

*1 : Refer to page 882 for the number of installed switches and the min. stroke.
*2 : Total length dimension with custom stroke is handled as custom stroke dedicated length.

SCP*3
CMK2
CMA2
SCM
SCG
SCA2
SCS2
CKV2
CAV2/COVP/N2
SSD2
SSG
SSD
CAT
MDC2
MVC
SMG
MSD/MSDG
FC*
STK
SRL3
SRG3
SRM3
SRT3
MRL2
MRG2
SM-25
ShkAbs
FJ
FK
Spd Contr
Ending

Internal structure and parts list (ø125 to 160)

● SSD2-DL-125 to 160 (double acting/double rod/with switch)

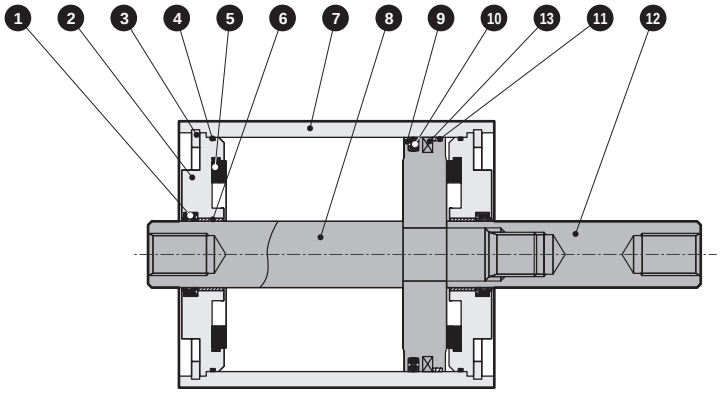

● SSD2-D-125 to 160 (double acting/double rod/without switch)

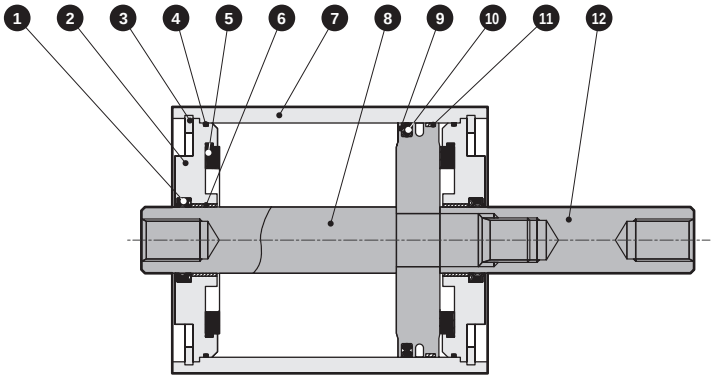

No.	Part name	Material	Remarks	No.	Part name	Material	Remarks
1	Rod packing	Nitrile rubber		8	Piston rod Ⓐ	Steel	Industrial chrome plating
2	Rod metal	Aluminum die-casting	Chromate	9	Piston	Aluminum die-casting	
3	C-snap ring	Steel	Zinc phosphate	10	Piston packing	Nitrile rubber	
4	Metal gasket	Nitrile rubber		11	Wear ring	Polyacetal resin	
5	Cushion rubber	Urethane rubber		12	Piston rod Ⓑ	Steel	Industrial chrome plating
6	Bush	Oiles drymet		13	Magnet	Rubber	With switch only
7	Body	Aluminum alloy	Hard alumite				

Repair parts list

Bore size (mm)	Kit No.	Repair parts No.
ø125	SSD2-D-125K	1 4 5 10 11
ø140	SSD2-D-140K	
ø160	SSD2-D-160K	

*1: Specify the kit No. when placing an order.

Internal structure and parts list (ø180, ø200)

● SSD2-DL-180, 200 (double acting/double rod/with switch)

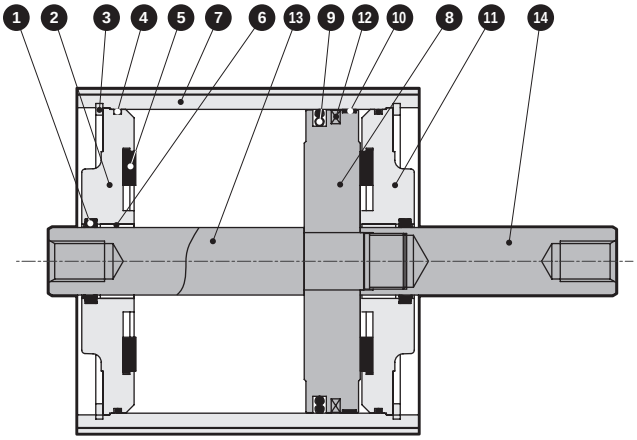

● SSD2-D-180, 200 (double acting/double rod/without switch)

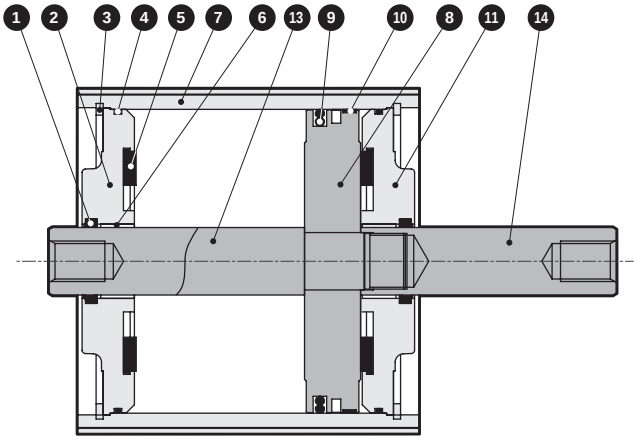

Parts list

No.	Part name	Material	Remarks	No.	Part name	Material	Remarks
1	Rod packing	Nitrile rubber		8	Piston	Aluminum alloy	
2	Rod metal	Cast iron	Paint	9	Piston packing	Nitrile rubber	
3	C-snap ring	Steel	Zinc phosphate	10	Wear ring	Polyacetal resin	
4	Gasket	Nitrile rubber		11	Cover	Cast iron	Paint
5	Cushion rubber	Urethane rubber		12	Magnet	Rubber	With switch only
6	Bush	Oiles drymet		13	Piston rod A	Steel	Industrial chrome plating
7	Body	Aluminum alloy	Hard alumite	14	Piston rod B	Steel	Industrial chrome plating

Repair parts list

Bore size (mm)	Kit No.	Repair parts No.
ø180	SSD2-D-180K	1 4 5 9 10
ø200	SSD2-D-200K	

SCP*3
CMK2
CMA2
SCM
SCG
SCA2
SCS2
CKV2
CAV2/COVP/N2
SSD2
SSG
SSD
CAT
MDC2
MVC
SMG
MSD/MSDG
FC*
STK
SRL3
SRG3
SRM3
SRT3
MRL2
MRG2
SM-25
ShkAbs
FJ
FK
Spd Contr
Ending

Dimensions (ø125 to ø160)

● SSD2-D(L)-125 to 160 (double acting/single rod)

● Rod end male thread

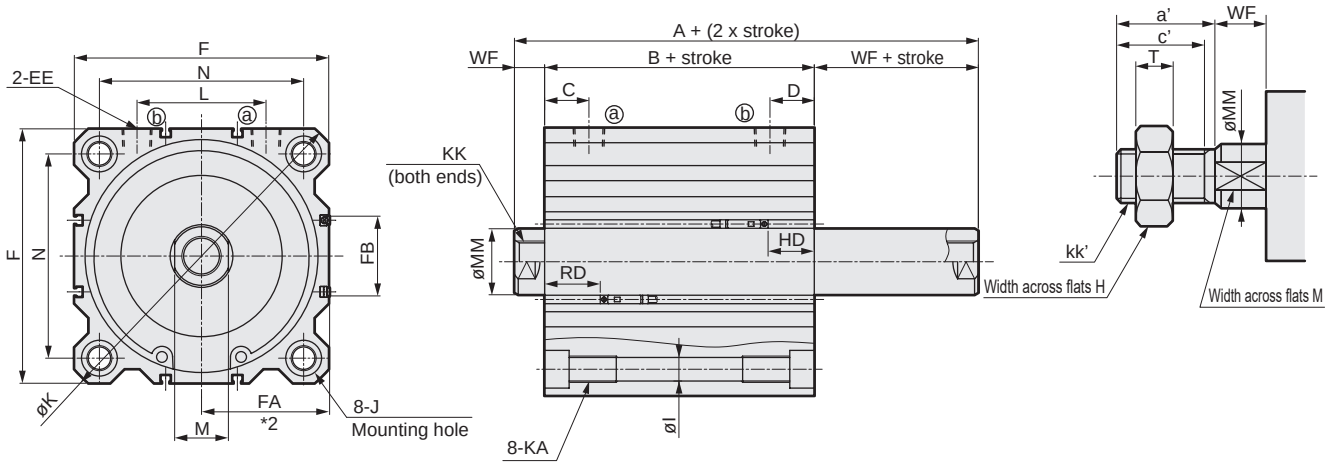

Note: The positions for the left and right widths across flats are unspecified.

Code	Common dimensions with switch															
Bore size (mm)	A	B	C	D	EE	F	I	J	K	KA	KK (*1)	L	M	MM	N	WF
ø125	115	83	29	29	Rc3/8	142	12.5	20 spot face depth 13	190	M14 depth 25	M22 x 2.5 depth 30 (22.5)	72	30	35	114	16
ø140	115	83	27.5	27.5	Rc3/8	158	12.5	20 spot face depth 13	210	M14 depth 25	M22 x 2.5 depth 30 (22.5)	80	30	35	128	16
ø160	125	91	30	30	Rc3/8	178	14.7	23 spot face depth 15.2	238	M16 depth 28	M24 x 3 depth 33 (24)	90	36	40	144	17

Code	T0H/V, T2H/V, T3H/V, T5/V				T2YH/V, T3YH/V, T2JH/V				T1H/V, T2YD			
Bore size (mm)	HD	RD	FA *2	FB	HD	RD	FA *2	FB	HD	RD	FA *2	FB
ø125	30	35	71.5(75)	44.5	28.5	33.5	77(80)	48	28.5	33.5	82.5(85.5)	48
ø140	31.5	33.5	79.5(83)	44.5	30	32	85(88)	48	30	32	90.5(93.5)	48
ø160	34	39	89.5(93)	48.5	32.5	37.5	95(98)	52	32.5	37.5	100.5(103.5)	52

Code	T2WH/V, T3WH/V				T8H/V			
Bore size (mm)	HD	RD	FA *2	FB	HD	RD	FA *2	FB
ø125	31.5	36.5	71.5(75)	44.5	24	29	77(80)	48
ø140	33	35	79.5(83)	44.5	25.5	27.5	85(88)	48
ø160	35.5	40.5	89.5(93)	48.5	28	33	95(98)	52

*1: Values in ( ) for KK dimensions indicate effective thread length on one side with 10 mm stroke.
*2: Dimensions in ( ) of FA are for the L-shaped lead wire.
*3: The RD side can be identified by a mark on the port surface of the body.

Dimensions of rod end male thread

Code / Bore size (mm)	a'	c'	H	kk'	M	MM	T	wf
ø125	45	42	46	M30x1.5	30	35	18	13
ø140	45	42	46	M30x1.5	30	35	18	13
ø160	50	47	55	M36x1.5	36	40	21	14

Dimensions (ø180 to ø200)

● SSD2-D(L)-180, 200 (double acting/double rod)

● Rod end male thread

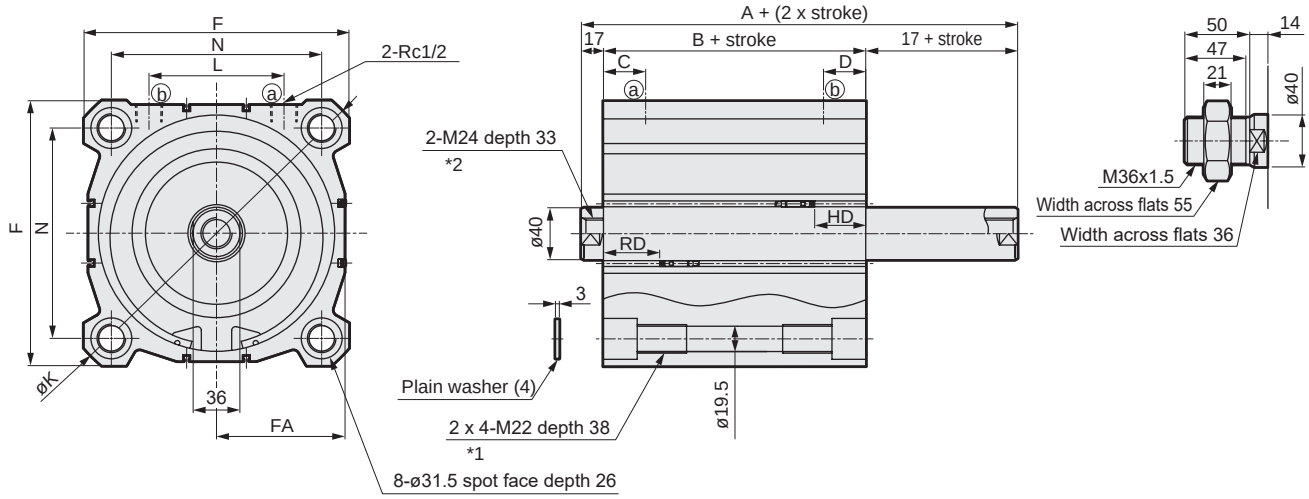

*1: 2x4-M22 through hole for 20 mm or less stroke.
*2: 2-M24 depth 27 (ø180) and 2-M24 depth 29 (ø200) for 10 mm stroke.
*3: The positions for the left and right widths across flats are unspecified.

Code / Bore size (mm)	A	B	C	D	F	K	L	N
ø180	136	102	32.5	32.5	204	270	104	162
ø200	143	109	33.5	33.5	226	300	110	182

Code	T0H/V, T2H/V, T3H/V, T5H/V			T2YH/V, T3YH/V, T2JH/V			T1H/V, T2YD		
Bore size (mm)	HD	RD	FA	HD	RD	FA	HD	RD	FA
ø180	39.5	43.5	99(102.5)	38.5	42.5	104.5(107.5)	38.5	42.5	110(113)
ø200	44.5	45.5	109.5(113)	43.5	44.5	115(118)	43.5	44.5	120.5(123.5)

Code	T2WH/V, T3WH/V			T8H/V		
Bore size (mm)	HD	RD	FA	HD	RD	FA
ø180	41.5	45.5	99(102.5)	33.5	37.5	104.5(107.5)
ø200	46.5	47.5	109.5(113)	38.5	39.5	115(118)

*1: Dimensions in ( ) of FA are for the L-shaped lead wire.
*2: The RD side can be identified by a mark on the port surface of the body.

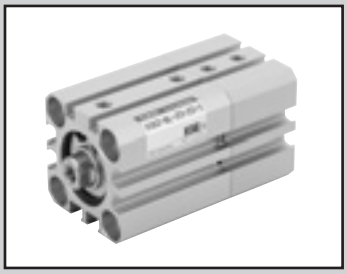

Compact cylinder double acting/back to back

SSD2-B Series

● Bore size: ø12/ø16/ø20/ø25/ø32/ø40/ø50/ø63/ø80/ø100

JIS symbol

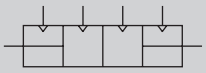

RoHS

Specifications

Item	SSD2-B SSD2-BL (with switch)									
Bore size mm	ø12	ø16	ø20	ø25	ø32	ø40	ø50	ø63	ø80	ø100
Actuation	Double acting/back to back									
Working fluid	Compressed air									
Max. working pressure MPa	1.0 (≈150 psi, 10 bar)									
Min. working pressure MPa	0.1 (≈15 psi, 1 bar)							0.05 (≈7.3 psi, 0.5 bar)		
Proof pressure MPa	1.6 (≈230 psi, 16 bar)									
Ambient temperature °C	-10 (14°F) to 60 (140°F) (no freezing)									
Port size	M5				Rc1/8 *1		Rc1/4		Rc3/8	
Stroke tolerance mm	$S_1 = {}^{+1.0}_{0}$ $S_2 = {}^{+1.0}_{0}$									
Working piston speed mm/s	50 to 500							50 to 300		
Cushion	None									
Lubrication	Not required (use turbine oil class 1 ISO VG32 if necessary for lubrication)									
Allowable absorbed energy J	0.004	0.01	0.016	0.021	0.025	0.092	0.1	0.12	0.27	0.56

*1: The ø32 bore size with a 5 mm stroke and without a switch has a port size of M5.

Stroke

Bore size (mm)	Standard stroke (mm)	Max. stroke (mm)	Min. stroke (mm)
ø12	5/10/15/20 25/30	30	1
ø16			
ø20	5/10/15/20/25 30/35/40/45/50	50	
ø25			
ø32	5/10/15/20/25/30/ 35/40/45/50/75/100	100	
ø40			
ø50	10/15/20/25 30/35/40/45/50 75/100		
ø63			
ø80			
ø100			

*1: When using the type with switch, refer to the table of the min. stroke with switch.

Min. stroke with switch (2 switches)

Bore size (mm)	T0H/V / T5H/V	T2H/V / T3H/V
ø12	10(5)	5
ø16		
ø20	5	
ø25		
ø32		
ø40		
ø50		
ø63		
ø80		
ø100		

1: Less than 10 mm with the 2-color LED, off-delay, AC magnetic field proof, T1 or T8* switch is not available.
*2: Values in ( ) are for the type with 1 on rod side.

Custom stroke

● SSD2-B Series

Item	Standard products Standard stroke body with spacer	
Model No.	Refer to How to order.	
Description	A spacer is added to the standard stroke body to adjust the stroke in 1 mm increments.	
Stroke range	Bore size	Stroke range
	12/16	1 to 29
	20 to 25	1 to 49
	32 to 100	1 to 99
Example of model No.	Model No.: SSD2-B-32-38-50 A +2 mm spacer is added to the SSD2-B-32-40 standard cylinder to create 38 mm stroke. B + S_1 dimension is 63 mm.	

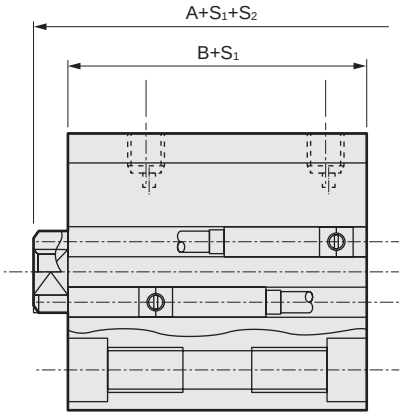

Switch specifications (F-switch)

● 1-color/2-color LED

Item	2-wire proximity	3-wire proximity	2-wire proximity		3-wire proximity		
	F2S	F3S	F2H/F2V	F2YH/F2YV	F3H/F3V	F3PH/F3PV (made to order)	F3YH/F3YV
Applications	Dedicated for programmable controller	For programmable controller, relay	Dedicated for programmable controller		For programmable controller, relay		
Output method	-	NPN output	-		NPN output	PNP output	NPN output
Power supply voltage	-	10 to 28 VDC	-		10 to 28 VDC	4.5 to 28 VDC	10 to 28 VDC
Load voltage	10 to 30 VDC	30 VDC or less	10 to 30 VDC	24 VDC ±10%	30 VDC or less		
Load current	5 to 20 mA	50 mA or less	5 to 20 mA		50 mA or less		
Indicator	LED (Lit when ON)		Yellow LED (Lit when ON)	Red/green LED (Lit when ON)	Yellow LED (Lit when ON)		Red/green LED (Lit when ON)
Leakage current	1 mA or less	10 μA or less	1mA or less		10 μA or less		
Weight g	1 m:10 3 m:29						

Switch specifications (T-switch)

● 1-color/2-color LED/for AC magnetic field proof

Item	2-wire proximity	2-wire proximity			3-wire proximity				2-wire reed							2-wire proximity
	T1H/T1V	T2H/T2V/T2JH/T2JV	T2YH/T2YV	T2WH/T2WV	T3H/T3V	T3PH/T3PV	T3YH/T3YV	T3WH/T3WV	T0H/T0V		T5H/T5V		T8H/T8V			T2YD(*4) T2YDT
Applications	For programmable controller, relay, compact solenoid valve	Dedicated for programmable controller			For programmable controller, relay				For programmable controller, relay		For programmable controller, relay, IC circuit (no indicator lamp), serial connection		For programmable controller, relay			Dedicated for programmable controller
Output method	-				NPN output	PNP output	NPN output	NPN output	-							
Pwr. supp. V.	-				10 to 28 VDC				-							
Load voltage	85 to 265 VAC	10 to 30 VDC		24 VDC ±10%	30 VDC or less				12/24 VDC	100/110 VAC	5/12/24 VDC	100/110 VAC	12/24 VDC	110 VAC	220 VAC	24 VDC ±10%
Load current	5 to 100 mA	5 to 20 mA (*3)			100 mA or less		50 mA or less		5 to 50 mA	7 to 20 mA	50 mA or less	20 mA or less	5 to 50 mA	7 to 20 mA	7 to 10 mA	5 to 20 mA
Indicator	LED (Lit when ON)	LED (Lit when ON)	Red/green LED (Lit when ON)	Red/green LED (Lit when ON)	LED (Lit when ON)	Yellow LED (Lit when ON)	Red/green LED (Lit when ON)	Red/green LED (Lit when ON)	LED (Lit when ON)		No indicator lamp		LED (Lit when ON)			Red/green LED (Lit when ON)
Leakage current	≤ 1 mA at 100 VAC, ≤ 2 mA at 200 VAC	1 mA or less			10 μA or less				0 mA							1 mA or less
Weight g	1 m:33 3 m:87 5 m:142	1 m:18 3 m:49 5 m:80	1 m:33 3 m:87 5 m:142	1 m:18 3 m:49 5 m:80	1 m:18 3 m:49 5 m:80		1 m:33 3 m:87 5 m:142	1 m:18 3 m:49 5 m:80	1 m:18 3 m:49 5 m:80				1 m:33 3 m:87 5 m:142			1 m:61 3 m:166 5 m:272

*1 : Refer to Ending Page 1 for detailed switch specifications and dimensions.
*2 : Switches other than the above models, such as switches with connectors, are also available. Refer to Ending Page 1.
*3 : The max. load current is 20 mA at 25°C. The current is lower than 20 mA if the operating ambient temperature around the switch is higher than 25°C. (5 to 10 mA at 60°C)
*4 : Switch for AC magnetic field (T2YD/T2YDT) cannot be used in DC magnetic field.
*5 : The F-switch uses a bend-resistant lead wire.

Cylinder weight table (the weight of the switches is when there are 2 cylinder switches.)

(Unit: g)

Stroke (mm)	5		10		15		20		25		30		35		40		45		50		75		100	
Bore size (mm)	No switch	Switch	No switch	Switch	No switch	Switch	No switch	Switch	No switch	Switch	No switch	Switch	No switch	Switch	No switch	Switch	No switch	Switch	No switch	Switch	No switch	Switch	No switch	Switch
ø12	36	86	44	86	53	95	61	103	70	112	72	114	-	-	-	-	-	-	-	-	-	-	-	-
ø16	48	104	59	104	69	114	80	125	91	136	102	147	-	-	-	-	-	-	-	-	-	-	-	-
ø20	63	118	75	150	88	163	101	176	113	188	126	201	139	214	152	227	165	240	203	278	-	-	-	-
ø25	87	178	102	193	118	209	134	225	160	241	165	256	181	272	197	288	213	304	228	319	-	-	-	-
ø32	122	236	144	258	166	280	188	302	209	323	231	345	253	367	275	389	297	411	318	432	494	542	604	652
ø40	183	326	210	353	236	379	263	406	290	433	316	459	342	485	369	512	395	538	472	565	646	695	776	825
ø50	-	-	341	535	383	577	425	619	467	661	510	704	552	746	594	788	636	830	678	872	1025	1082	1235	1292
ø63	-	-	507	786	562	841	617	896	672	951	727	1006	782	1061	838	1117	893	1172	948	1227	1438	1502	1713	1777
ø80	-	-	928	1341	1015	1428	1101	1514	1188	1601	1274	1887	1361	1774	1448	1861	1535	1948	1621	2034	2401	2467	2833	2899
ø100	-	-	1433	2000	1547	2114	1660	2227	1774	2341	1888	2455	2002	2569	2115	2682	2229	2796	2343	2910	3406	3478	3973	4045

Hexagon socket head cap screw weight

(Unit: g)

Stroke (mm)	Cylinder 2 stroke												Connector
Bore size (mm)	5	10	15	20	25	30	35	40	45	50	75	100	
ø12	3.2	4	4.8	5.6	6.4	7.2	-	-	-	-	-	-	5.6
ø16	3.2	2.4	2.4	2.4	2.4	2.4	-	-	-	-	-	-	5.6
ø20	8	11	14	16	19	22	25	28	30	33	-	-	14
ø25	8	11	14	16	19	22	25	28	30	33	-	-	14
ø32	8	11	14	16	19	22	25	28	30	33	47	61	14
ø40	8	11	14	16	19	22	25	28	30	33	47	61	14
ø50	-	16.7	20.6	24.5	28.5	32.4	36.3	40.3	44.2	48.1	67.8	87.5	28.8
ø63	-	40.8	47.2	53.6	60	66.4	72.8	79.2	85.6	92	124	156	60
ø80	-	60	72	84	96	108	120	132	144	156	216	276	116
ø100	-	60	72	84	96	108	120	132	144	156	216	276	116

(1) Cylinder 1
(2) Cylinder 2
(3) Hexagon socket head cap screw
(4) Connector

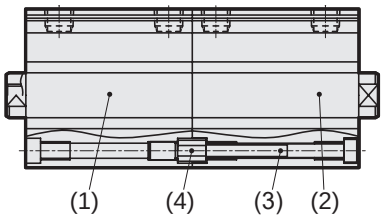

Total cylinder weight
Total weight = weight of cylinder 1 + weight of cylinder 2 + (hexagon socket head cap screw + connector).

[Example: Total weight of SSD-B-25-30-N-10-N]
Weight of ø25 with 30 mm stroke:····(1)
Weight of ø25 with 10 mm stroke:····(2)
Weight of hexagon socket head cap screw for ø25 cylinder 2 with 10 mm stroke + weight of connector: ··· (3)

Total weight = (1) + (2) + (3) = 165 g + 102 g + 11 g + 14 g = 292 g

Theoretical thrust table

(Unit: N)

Bore size (mm)	Operating direction	Working pressure MPa											
		0.05	0.1	0.15	0.2	0.3	0.4	0.5	0.6	0.7	0.8	0.9	1.0
ø12	Push	-	11.3	17.0	22.6	33.9	45.2	56.5	67.9	79.2	90.5	$1.02x10^2$	$1.13x10^2$
	Pull	-	8.48	12.7	17.0	25.4	33.9	42.4	50.9	59.4	67.9	76.3	84.8
ø16	Push	-	20.1	30.2	40.2	60.3	80.4	$1.01x10^2$	$1.21x10^2$	$1.41x10^2$	$1.61x10^2$	$1.81x10^2$	$2.01x10^2$
	Pull	-	15.1	22.6	30.2	45.2	60.3	75.4	90.5	$1.06x10^2$	$1.21x10^2$	$1.36x10^2$	$1.51x10^2$
ø20	Push	-	31.4	47.1	62.8	94.2	$1.26x10^2$	$1.57x10^2$	$1.88x10^2$	$2.20x10^2$	$2.51x10^2$	$2.83x10^2$	$3.14x10^2$
	Pull	-	23.6	35.3	47.1	70.7	94.2	$1.18x10^2$	$1.41x10^2$	$1.65x10^2$	$1.88x10^2$	$2.12x10^2$	$2.36x10^2$
ø25	Push	-	49.1	73.6	98.2	$1.47x10^2$	$1.96x10^2$	$2.45x10^2$	$2.95x10^2$	$3.44x10^2$	$3.93x10^2$	$4.42x10^2$	$4.91x10^2$
	Pull	-	37.8	56.7	75.6	$1.13x10^2$	$1.51x10^2$	$1.89x10^2$	$2.27x10^2$	$2.64x10^2$	$3.02x10^2$	$3.40x10^2$	$3.78x10^2$
ø32	Push	-	80.4	$1.21x10^2$	$1.61x10^2$	$2.41x10^2$	$3.22x10^2$	$4.02x10^2$	$4.83x10^2$	$5.63x10^2$	$6.43x10^2$	$7.24x10^2$	$8.04x10^2$
	Pull	-	60.3	90.5	$1.21x10^2$	$1.81x10^2$	$2.41x10^2$	$3.02x10^2$	$3.62x10^2$	$4.22x10^2$	$4.83x10^2$	$5.43x10^2$	$6.03x10^2$
ø40	Push	-	$1.26x10^2$	$1.88x10^2$	$2.51x10^2$	$3.77x10^2$	$5.03x10^2$	$6.28x10^2$	$7.54x10^2$	$8.80x10^2$	$1.01x10^3$	$1.13x10^3$	$1.26x10^3$
	Pull	-	$1.06x10^2$	$1.58x10^2$	$2.11x10^2$	$3.17x10^2$	$4.22x10^2$	$5.28x10^2$	$6.33x10^2$	$7.39x10^2$	$8.44x10^2$	$9.50x10^2$	$1.06x10^3$
ø50	Push	-	$1.96x10^2$	$2.95x10^2$	$3.93x10^2$	$5.89x10^2$	$7.85x10^2$	$9.82x10^2$	$1.18x10^3$	$1.37x10^3$	$1.57x10^3$	$1.77x10^3$	$1.96x10^3$
	Pull	-	$1.65x10^2$	$2.47x10^2$	$3.30x10^2$	$4.95x10^2$	$6.60x10^2$	$8.25x10^2$	$9.90x10^2$	$1.15x10^3$	$1.32x10^3$	$1.48x10^3$	$1.65x10^3$
ø63	Push	$1.56x10^2$	$3.12x10^2$	$4.68x10^2$	$6.23x10^2$	$9.35x10^2$	$1.25x10^3$	$1.56x10^3$	$1.87x10^3$	$2.18x10^3$	$2.49x10^3$	$2.81x10^3$	$3.12x10^3$
	Pull	$1.40x10^2$	$2.80x10^2$	$4.20x10^2$	$5.61x10^2$	$8.41x10^2$	$1.12x10^3$	$1.40x10^3$	$1.68x10^3$	$1.96x10^3$	$2.24x10^3$	$2.52x10^3$	$2.80x10^3$
ø80	Push	$2.51x10^2$	$5.03x10^2$	$7.54x10^2$	$1.01x10^3$	$1.51x10^3$	$2.01x10^3$	$2.51x10^3$	$3.02x10^3$	$3.52x10^3$	$4.02x10^3$	$4.52x10^3$	$5.03x10^3$
	Pull	$2.27x10^2$	$4.54x10^2$	$6.80x10^2$	$9.07x10^2$	$1.36x10^3$	$1.81x10^3$	$2.27x10^3$	$2.72x10^3$	$3.17x10^3$	$3.63x10^3$	$4.08x10^3$	$4.54x10^3$
ø100	Push	$3.93x10^2$	$7.85x10^2$	$1.18x10^3$	$1.57x10^3$	$2.36x10^3$	$3.14x10^3$	$3.93x10^3$	$4.71x10^3$	$5.50x10^3$	$6.28x10^3$	$7.07x10^3$	$7.85x10^3$
	Pull	$3.57x10^2$	$7.15x10^2$	$1.07x10^3$	$1.43x10^3$	$2.14x10^3$	$2.86x10^3$	$3.57x10^3$	$4.29x10^3$	$5.00x10^3$	$5.72x10^3$	$6.43x10^3$	$7.15x10^3$

SCP*3
CMK2
CMA2
SCM
SCG
SCA2
SCS2
CKV2
CAV2/COVP/N2
SSD2
SSG
SSD
CAT
MDC2
MVC
SMG
MSD/MSDG
FC*
STK
SRL3
SRG3
SRM3
SRT3
MRL2
MRG2
SM-25
ShkAbs
FJ
FK
Spd Contr
Ending

How to order

No switch (without magnet for switch)

SSD2-B - 12 - ◯ 5 —— N - 10 —— N - I

Cylinder 1 stroke (S1) — Cylinder 2 stroke (S2)

With switch (built-in magnet for switch)

SSD2-BL - 12 - ◯ 5 - T0H - R - N - 10 - T0H - R - N - I

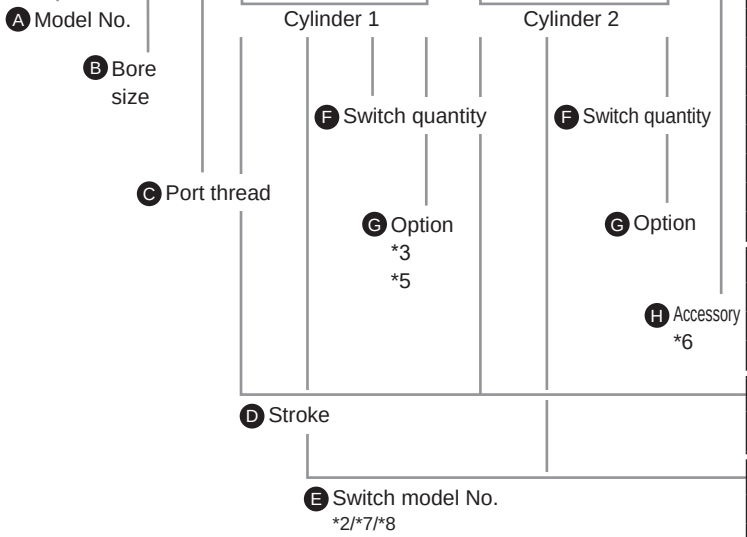

Precautions for model No. selection

*1 : When two cylinders are connected, the connection is from Cylinder 2 side. (Refer to dimensions) Determine cylinders 1 and 2 with the mounting method in mind.
2 : The T2YD switch cannot be installed on ø12 and ø16. In addition, T8* switch cannot be installed on ø12 to ø32.
*3 : Piston rod of ø12 to ø25 is stainless steel as standard. C-snap ring is stainless steel instead of steel. The rod end male thread nut is stainless steel.
*4 : Refer to pages 750 and 751 for combinations of variations/options.
*5 : Option "N" will be inscribed on both S1 and S2 sides, but for all other option codes, they will only be written on S2.
*6 : Two units are included when an accessory is selected. One unit each is included when "IY" is selected.
*7 : The F-switch with L type lead wire on ø20 models cannot be selected on strokes of 15 mm or under.
*8 : Switches are shipped with the product. Contact CKD if assembling before shipment is necessary.
*9 : When S1 stroke is at or below that in the table below, the length of the usable mounting bolts will differ from the standard and so contact CKD.

Bore size	No switch	With switch
	S1 Stroke	
ø20	10 or less	-
ø25	5 or less	-
ø32	5 or less	-
ø50	5 or less	-
ø63	15 or less	5 or less
ø80	20 or less	10 or less
ø100	10 or less	-

*10: F-switch cannot be selected.

[Example of model No.]

SSD2-BL-12-5-T0H-R-N-10-T0H-R-N

Model: Compact cylinder, back to back

Ⓑ Bore size : ø12 mm
Ⓒ Port thread : Rc thread
Ⓓ Stroke S1 : 5 mm
Ⓔ Switch model No. : Reed switch T0H, lead wire 1 m
Ⓕ Switch quantity : 1 on rod side
Ⓒ Option : Rod end male thread
Ⓓ Stroke S2 : 10 mm
Ⓔ Switch model No. : Reed switch T0H, lead wire 1 m
Ⓕ Switch quantity : 1 on rod side
Ⓖ Option : Rod end male thread

Cylinder 1 / Cylinder 2

Cylinder 1 stroke	5 mm (S1)
+ Cylinder 2 stroke	10 mm (S2)
Total stroke	15 mm S1+S2

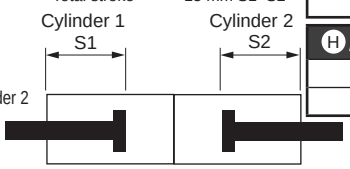

Code	Description
Ⓐ Model No.	
SSD2-B	Double acting/back to back
SSD2-BL	Double acting/back to back/with switch
Ⓑ Bore size (mm)	
12	ø12
16	ø16
20	ø20
25	ø25
32	ø32
40	ø40
50	ø50
63	ø63
80	ø80
100	ø100
Ⓒ Port thread	
Blank	Rc thread
NN	NPT thread (ø32 and over) (made-to-order product)
GN	G thread (ø32 and over) (made-to-order product)
Ⓓ Stroke (mm)	
Refer to the stroke table on the following page.	

Ⓔ Switch model No.

Lead wire Straight	Lead wire L-shaped	Contact	Voltage AC	Voltage DC		Lead wire	12	16	20	25	32	40	50	63	80	100
-	F2S*	Proximity		●	1-color LED	2-wire			●	●						
-	F3S*	Proximity		●	1-color LED	3-wire			●	●						
F2H*	F2V*	Proximity		●	1-color LED	2-wire			●	●						
F3H*	F3V*	Proximity		●	1-color LED	3-wire			●	●						
F3PH*	F3PV*	Proximity		●	1-color LED (PNP output) (custom)	3-wire			●	●						
F2YH*	F2YV*	Proximity		●	2-color LED	2-wire			●	●						
F3YH*	F3YV*	Proximity		●	2-color LED	3-wire			●	●						
T0H*	T0V*	Reed	●	●	1-color LED	2-wire	●	●	●	●	●	●	●	●	●	●
T5H*	T5V*	Reed	●	●	no indicator lamp	2-wire	●	●	●	●	●	●	●	●	●	●
T8H*	T8V*	Reed	●	●	1-color LED	2-wire						●	●	●	●	●
T1H*	T1V*	Proximity	●		1-color LED	2-wire			●	●	●	●	●	●	●	●
T2H*	T2V*	Proximity		●	1-color LED	2-wire	●	●	●	●	●	●	●	●	●	●
T3H*	T3V*	Proximity		●	1-color LED	3-wire	●	●	●	●	●	●	●	●	●	●
T3PH*	T3PV*	Proximity		●	1-color LED (PNP output)	3-wire	●	●	●	●	●	●	●	●	●	●
T2WH*	T2WV*	Proximity		●	2-color LED	2-wire	●	●	●	●	●	●	●	●	●	●
T2YH*	T2YV*	Proximity		●	2-color LED	2-wire			●	●	●	●	●	●	●	●
T3WH*	T3WV*	Proximity		●	2-color LED	3-wire	●	●	●	●	●	●	●	●	●	●
T3YH*	T3YV*	Proximity		●	2-color LED	3-wire			●	●	●	●	●	●	●	●
T2YD*	-	Proximity		●	2-color LED (AC magnetic field)	2-wire			●	●	●	●	●	●	●	●
T2YDT*	-	Proximity		●	2-color LED (AC magnetic field)	2-wire			●	●	●	●	●	●	●	●
T2JH*	T2JV*	Proximity		●	1-color LED off-delay	2-wire			●	●	●	●	●	●	●	●

* Lead wire length	
Blank	1 m (standard)
3	3 m (option)
5	5 m (option) *9
Ⓕ Switch quantity	
R	1 on rod side
H	1 on head side
D	2
Ⓖ Option	
Blank	Rod end female thread
N	Rod end male thread
M *3	Piston rod material (stainless steel)
Ⓗ Accessory (available when rod end male thread "N" is selected)	
I	Rod eye
Y	Rod clevis (pin and snap ring included)

[Stroke table]

Stroke (mm)		Applicable bore size									
		12	16	20	25	32	40	50	63	80	100
Standard stroke	5	●	●	●	●	●	●				
	10	●	●	●	●	●	●	●	●	●	●
	15	●	●	●	●	●	●	●	●	●	●
	20	●	●	●	●	●	●	●	●	●	●
	25	●	●	●	●	●	●	●	●	●	●
	30	●	●	●	●	●	●	●	●	●	●
	35			●	●	●	●	●	●	●	●
	40			●	●	●	●	●	●	●	●
	45			●	●	●	●	●	●	●	●
	50			●	●	●	●	●	●	●	●
	75					●	●	●	●	●	●
	100					●	●	●	●	●	●
Min. stroke (mm) *1		1									
Max. stroke (mm)		30		50		100					
Custom stroke *2		In 1 mm increments									

1 : Less than 5 mm for 1-color LED switch and less than 10 mm for the 2-color LED, off-delay, AC magnetic field proof, T1 or T8* switch are not available.
Refer to page 890 for the min. stroke with switch.
*2 : The total length when using a custom stroke is the same as that when using the next longer standard stroke.

How to order switch

SW - T0H

Switch model No.
(Item Ⓔ on page 894)

Internal structure and parts list

● SSD2-BL-12 to 25 (double acting/back to back/with switch)

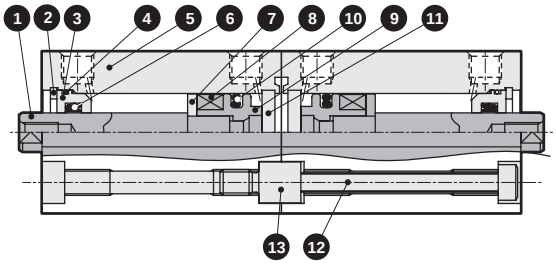

● SSD2-BL-32 to 50 (double acting/back to back/with switch)

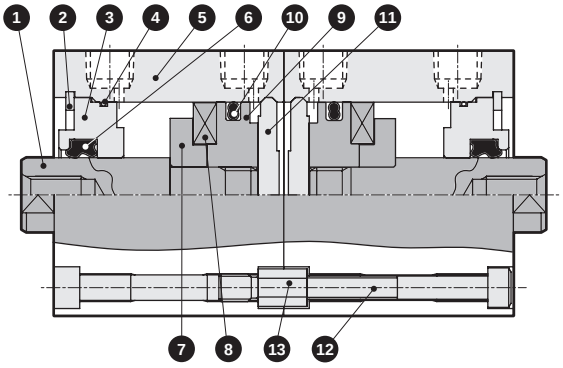

● SSD2-B-12 to 25 (double acting/back to back)

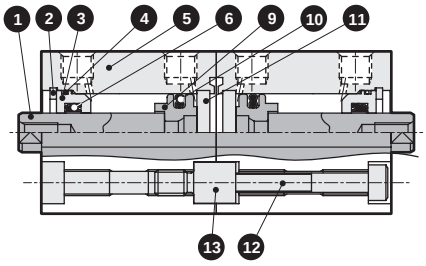

● SSD2-B-32 to 50 (double acting/back to back)

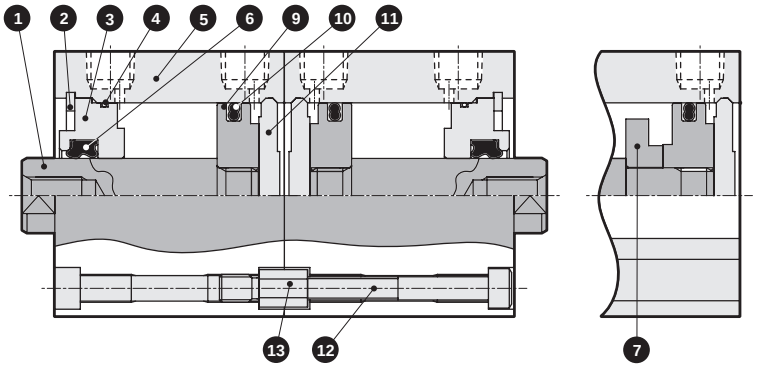

Over 50 st

No.	Part name	Material	Remarks
1	Piston rod	ø12 to ø25: Stainless steel ø32 to ø50: Steel	ø16 to ø50 Industrial chrome plating
2	C-snap ring	Steel	Zinc phosphate
3	Rod metal	Special aluminum	Alumite
4	Rod metal gasket	Nitrile rubber	
5	Body	Aluminum alloy	Hard alumite
6	Rod packing	Nitrile rubber	
7	Spacer	Aluminum alloy	Chromate

No.	Part name	Material	Remarks
8	Magnet	Plastic	
9	Piston	Aluminum alloy	Chromate
10	Piston packing	Nitrile rubber	
11	Cover	ø12 to 25: Stainless steel ø32 to ø50: Aluminum alloy	ø32 to ø50: Alumite
12	Hexagon socket head cap screw	Steel	Black finish
13	Connector	Steel	Zinc chromate

Repair parts list

Bore size (mm)	Kit No.	Repair parts No.
ø12	SSD2-B-12K	4 6 10
ø16	SSD2-B-16K	
ø20	SSD2-B-20K	
ø25	SSD2-B-25K	
ø32	SSD2-B-32K	
ø40	SSD2-B-40K	
ø50	SSD2-B-50K	

SSD2-B application examples

When the same strokes are combined, 3 positions are possible.

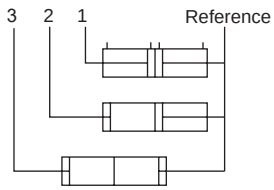

When different strokes are combined, 4 positions are possible.

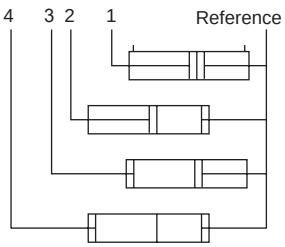

Internal structure and parts list

● SSD2-BL-63 to 100 (double acting/back to back/with switch)

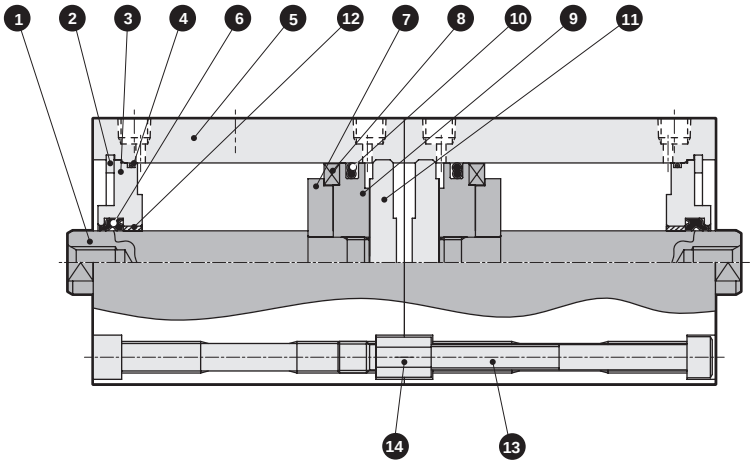

● SSD2-B-63 to 100 (double acting/back to back)

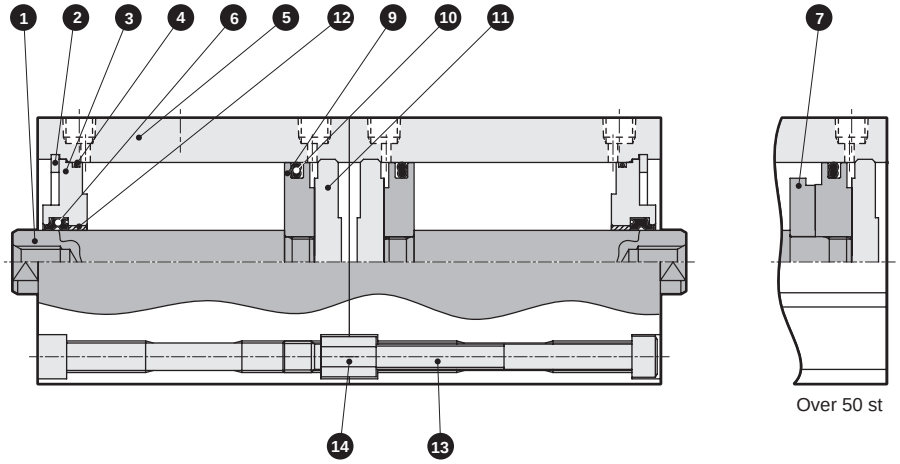

No.	Part name	Material	Remarks	No.	Part name	Material	Remarks
1	Piston rod	Steel	Industrial chrome plating	8	Magnet	Plastic	
2	C-snap ring	Steel	Zinc phosphate	9	Piston	Aluminum alloy	Chromate
3	Rod metal	Aluminum alloy	Chromate	10	Piston packing	Nitrile rubber	
4	Rod metal gasket	Nitrile rubber		11	Cover	Aluminum alloy	Alumite
5	Body	Aluminum alloy	Hard alumite	12	Bush	Oiles drymet	*1
6	Rod packing	Nitrile rubber		13	Hexagon socket head cap screw	Steel	Black finish
7	Spacer	Aluminum alloy	Chromate	14	Connector	Steel	Zinc chromate

*1: Material is steel for copper and PTFE free specifications.

Repair parts list

Bore size (mm)	Kit No.	Repair parts No.
ø63	SSD2-B-63K	4 6 10
ø80	SSD2-B-80K	
ø100	SSD2-B-100K	

Dimensions

● SSD2-BL-12/16 (with switch)

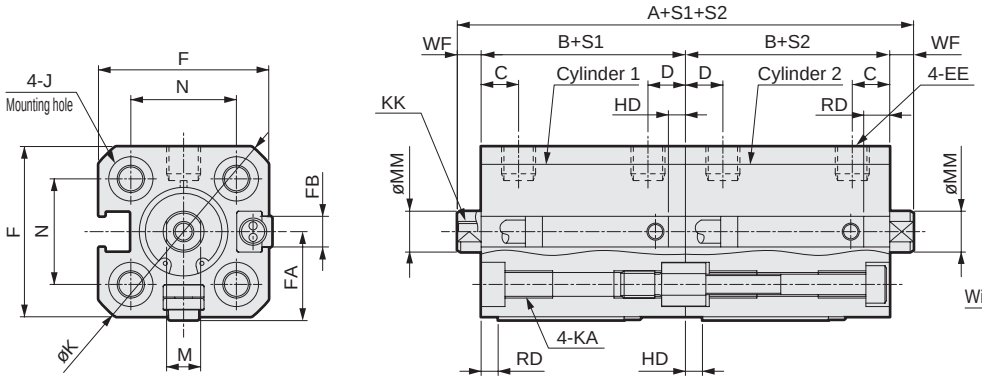

● Rod end male thread

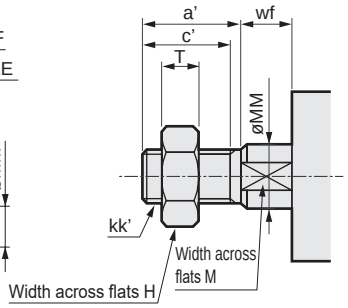

● SSD2-BL-25, 32 (with switch)

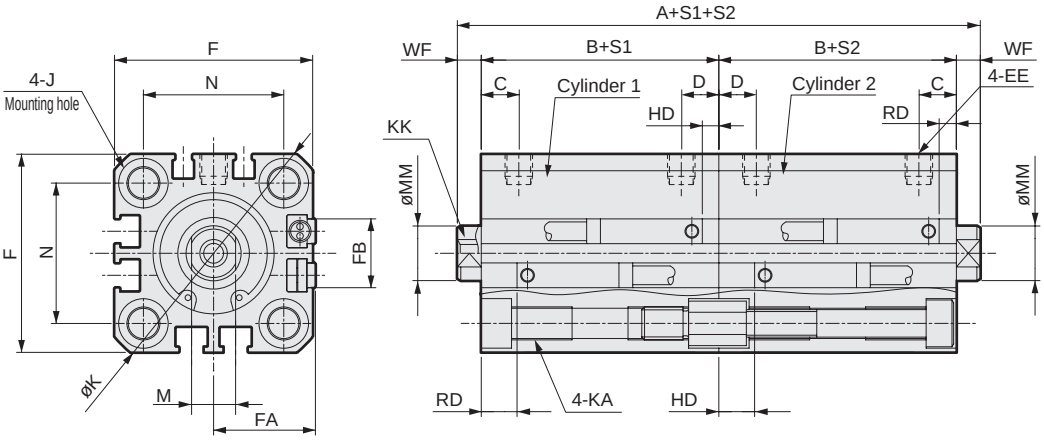

Code / Bore size (mm)	Common dimensions with switch															
	A *1	B *1	C	D	EE	F	FA *4	FB	J	K	KA	KK	M	MM	N	WF
ø12	51	22	5.5	5.5	M5	25	13(16.5)	4.5	6.5 spot face depth 3.5	32	M4 depth 7	M3 depth 6	5	6	15.5	3.5
ø16	51	22	5.5	5.5	M5	29	15(18.5)	4.5	6.5 spot face depth 3.5	38	M4 depth 7	M4 depth 8	6	8	20	3.5
ø20	68	29.5	8	5.5	M5	36	18.5(22)	12.5	9 spot face depth 5.5	47	M6 depth 11	M5 depth 7	8	10	25.5	4.5
ø25	75	32.5	11	6	M5	40	20.5(24)	13.5	9 spot face depth 5.5	51	M6 depth 11	M6 depth 12	10	12	28	5

Switch dimensions / Bore size (mm)	Reed T0H/T0V, T5H/T5V *6		Proximity T2H/T2V, T3H/T3V *6		Proximity T2WH/T2WV, T3WH/T3WV *6		Proximity F2H/F2V, F3H/F3V, F2YH/F2YV, F3YH/F3YV		Proximity F2S/F3S	
	HD	RD	HD	RD	HD	RD	HD	RD	HD	RD
ø12	1.5	1.5	1.5	1.5	3.5	3.5				
ø16	0	4	0	4.5	1	6				
ø20	3	7.5	3	7.5	5	9.5	7.5	12	6.5	11
ø25	4	9.5	4	9.5	6	11.5	8.5	14	7.5	13

*1 : To calculate A + S1 + S2, B + S1 or B + S2 when using custom stroke, apply the next longer standard stroke (instead of the custom stroke) to the stroke.
(Example) If the custom stroke is 7 mm, apply the standard stroke of 10 mm.
*2 : HD and RD dimensions for 5 mm stroke differ from these dimensions according to the setting.
3 : Refer to page 1044 for HD, RD and protruding dimensions of the 2-color LED, off-delay, AC magnetic field proof, T1 and T8* switches.
*4 : Dimensions in ( ) of FA are for the L-shaped lead wire.
*5 : For dimensions of individual accessories, refer to pages 1046 to 1049.
*6 : Only F-switch is available for the ø20 or ø25 piping port surface.

● Rod end male thread

Code / Bore size (mm)	a'	c'	H	kk'	M	MM	T	wf
ø12	10.5	9	8	M5	5	6	3.2	3.5
ø16	12	10	10	M6	6	8	3.6	3.5
ø20	14	12	13	M8	8	10	5	4.5
ø25	17.5	15	17	M10x1.25	10	12	6	5

Dimensions

● SSD2-B-12/16 (without switch)

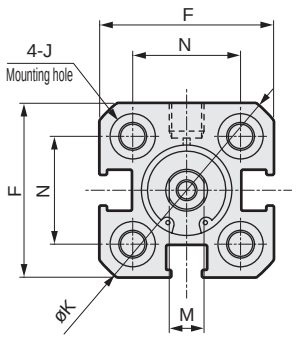

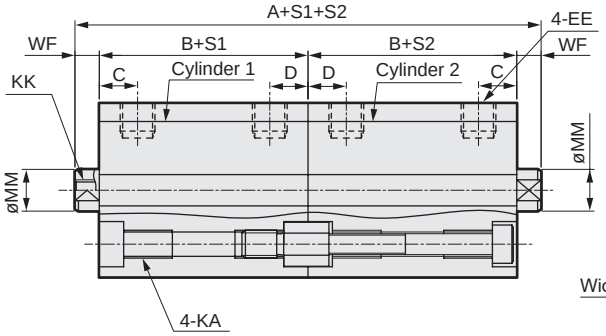

● Rod end male thread

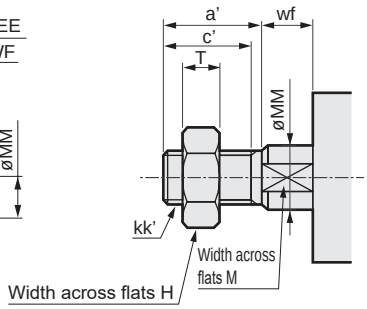

● SSD2-B-20, 25 (without switch)

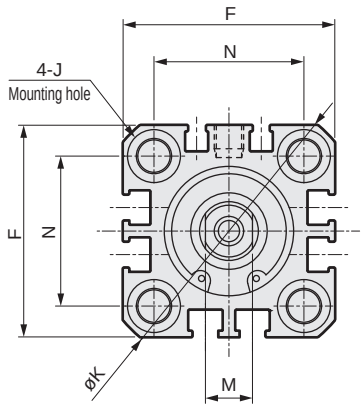

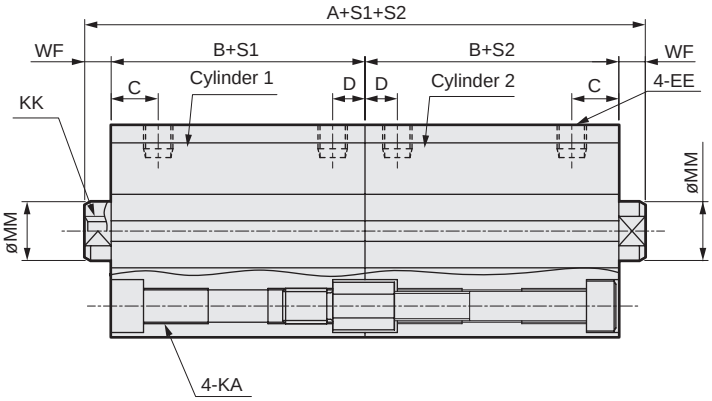

Code / Bore size (mm)	Dimensions without switch and common dimensions													
	A *1	B *1	C	D	EE	F	J	K	KA	KK	M	MM	N	WF
ø12	41	17	5.5	5.5	M5	25	6.5 spot face depth 3.5	32	M4 depth 7	M3 depth 6	5	6	15.5	3.5
ø16	41	17	5.5	5.5	M5	29	6.5 spot face depth 3.5	38	M4 depth 7	M4 depth 8	6	8	20	3.5
ø20	48	19.5	8	5.5	M5	36	9 spot face depth 5.5	47	M6 depth 11	M5 depth 7	8	10	25.5	4.5
ø25	55	22.5	11	6	M5	40	9 spot face depth 5.5	51	M6 depth 11	M6 depth 12	10	12	28	5

● Rod end male thread

Code / Bore size (mm)	a'	c'	H	kk'	M	MM	T	wf
ø12	10.5	9	8	M5	5	6	3.2	3.5
ø16	12	10	10	M6	6	8	3.6	3.5
ø20	14	12	13	M8	8	10	5	4.5
ø25	17.5	15	17	M10x1.25	10	12	6	5

*1 : To calculate A + S1 + S2, B + S1 or B + S2 when using custom stroke, apply the next longer standard stroke (instead of the custom stroke) to the stroke.
(Example) If the custom stroke is 7 mm, apply the standard stroke of 10 mm.
*2 : For dimensions of individual accessories, refer to pages 1046 to 1049.

SCP*3
CMK2
CMA2
SCM
SCG
SCA2
SCS2
CKV2
CAV2/COVP/N2
SSD2
SSG
SSD
CAT
MDC2
MVC
SMG
MSD/MSDG
FC*
STK
SRL3
SRG3
SRM3
SRT3
MRL2
MRG2
SM-25
ShkAbs
FJ
FK
Spd Contr
Ending

Dimensions

● SSD2-BL-32 to 100 (with switch)

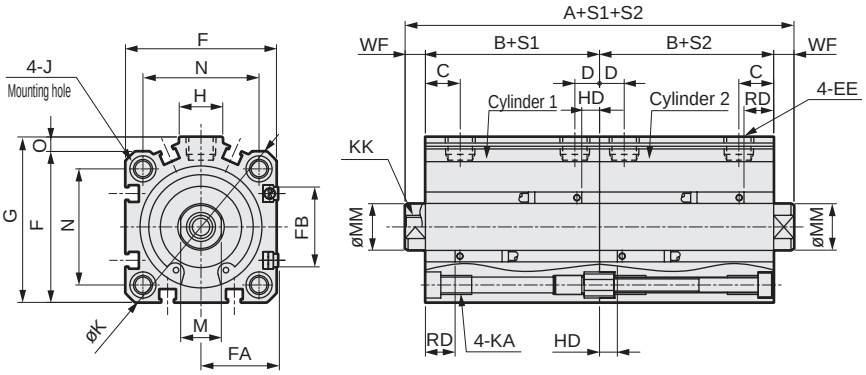

● Rod end male thread

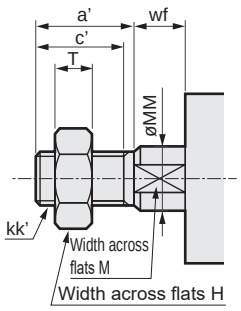

● SSD2-B-32 to 100 (without switch)

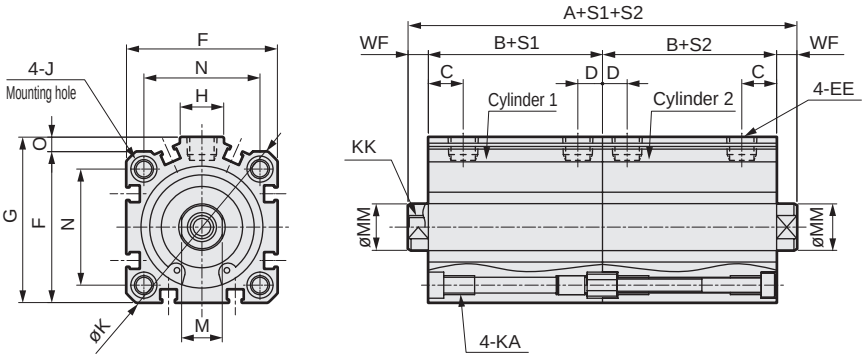

Code / Bore size (mm)	No switch A *1, *6	No switch B *1, *6	Common dimensions with switch A *1	B *1	C *8	D *8	EE	F	FA *4	FB	G	H	J	K
ø32	60(80)	23(33)	80	33	8(10)	8(5.5)	Rc1/8 *7	45	23(26.5)	20.5	49.5	12.5	9 spot face depth 5.5	60
ø40	73(93)	29.5(39.5)	93	39.5	12(11.5)	8.5(8)	Rc1/8	52	26.5(30)	27.5	57	15	9 spot face depth 5.5	69
ø50	77(97)	30.5(40.5)	97	40.5	10.5	10.5	Rc1/4	64	32.5(36)	28.5	71	18	11 spot face depth 6.5	86
ø63	88(108)	36(46)	108	46	13	11	Rc1/4	77	39(42.5)	28.5	84	23	14 spot face depth 9	103
ø80	107(127)	43.5(53.5)	127	53.5	16	13	Rc3/8	98	49.5(53)	28.5	104	31	17.5 spot face depth 11	132
ø100	130(150)	53(63)	150	63	23	15	Rc3/8	117	59(62.5)	28.5	123.5	38	17.5 spot face depth 11	156

Code / Bore size (mm)	Common dimensions with switch KA	KK	M	MM	N	O	WF	Reed T0H/T0V, T5H/T5V HD *2	RD *2	Proximity T2H/T2V, T3H/T3V HD *2	RD *2	Proximity T2WH/T2WV, T3WH T3WV HD	RD
ø32	M6 depth 11	M8 depth 13	14	16	34	4.5	7	4	9.5	4	9.5	6	11.5
ø40	M6 depth 11	M8 depth 13	14	16	40	5	7	7	12	7	12	8.5	13.5
ø50	M8 depth 13	M10 depth 15	17	20	50	7	8	7.5	12.5	7.5	12.5	9	14
ø63	M10 depth 25	M10 depth 15	17	20	60	7	8	12.5	13	12.5	13	14	14.5
ø80	M12 depth 28	M16 depth 21	22	25	77	6	10	17.5	15.5	17.5	15.5	19	17
ø100	M12 depth 28	M20 depth 27	27	30	94	6.5	12	23	19.5	23	19.5	24.5	21

*1 : To calculate A + S1 + S2, B + S1 or B + S2 when using custom stroke, apply the next longer standard stroke (instead of the custom stroke) to the stroke. (Example) If the custom stroke is 7 mm, apply the standard stroke of 10 mm.
*2 : HD and RD dimensions for 5 mm stroke differ from these dimensions according to the setting.
3 : Refer to page 1044 for HD, RD and protruding dimensions of the 2-color LED, off-delay, AC magnetic field proof, T1 and T8* switches.
*4 : Dimensions in ( ) of FA are for the L-shaped lead wire.
*5 : For dimensions of individual accessories, refer to pages 1046 to 1049.
*6 : Dimensions in ( ) of codes A and B are for strokes of more than 50 mm.
*7 : The ø32 bore size with a 5 mm stroke and without a switch has a port size of M5.*8 : Dimensions in ( ) of codes C and D are when the value is for a 5 mm stroke without switch.

● Rod end male thread

Code / Bore size (mm)	a'	c'	H	kk'	M	MM	T	wf
ø32	23.5	20.5	22	M14x1.5	14	16	8	5
ø40	23.5	20.5	22	M14x1.5	14	16	8	5
ø50	28.5	26	27	M18x1.5	17	20	11	5
ø63	28.5	26	27	M18x1.5	17	20	11	5
ø80	35.5	32.5	32	M22x1.5	22	25	13	8
ø100	35.5	32.5	41	M26x1.5	27	30	16	8

MEMO

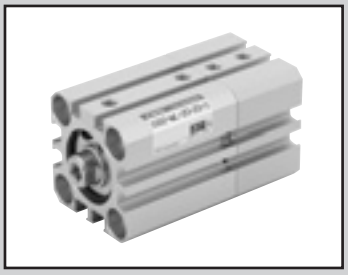

Compact cylinder double acting/2-stage

SSD2-W Series

● Bore size: ø12/ø16/ø20/ø25/ø32/ø40/ø50/ø63/ø80/ø100

RoHS

Specifications

Item	SSD2-W SSD2-WL (with switch)									
Bore size mm	ø12	ø16	ø20	ø25	ø32	ø40	ø50	ø63	ø80	ø100
Actuation	Double acting/2-stage									
Working fluid	Compressed air									
Max. working pressure MPa	1.0 (≈150 psi, 10 bar) (*1)									
Min. working pressure MPa	0.15 (≈22 psi, 1.5 bar)							0.1 (≈15 psi, 1 bar)		
Proof pressure MPa	1.6 (≈230 psi, 16 bar)									
Ambient temperature °C	-10 (14°F) to 60 (140°F) (no freezing)									
Port size	M5				Rc1/8 (*2)		Rc1/4		Rc3/8	
Stroke tolerance mm	$S_1=^{+1.0}_{0}$						$S_2=^{0}_{-1.5}$			
Working piston speed mm/s	50 to 500							50 to 300		
Cushion	None									
Lubrication	Not required (use turbine oil ISO VG32 if necessary for lubrication)									
Allowable absorbed energy J	0.004	0.01	0.016	0.021	0.025	0.092	0.1	0.12	0.27	0.56

*1: The max. working pressure is 0.5 MPa when S1 and S2 are the same value.
*2: The ø32 bore size with a 5 mm stroke and without a switch has a port size of M5.

Stroke

Bore size (mm)	Standard stroke (mm)	Max. stroke (mm)	Min. stroke (mm)
ø12	5/10/15/20 25/30	30	1
ø16			
ø20	5/10/15/20/25 30/35/40/45/50	50	
ø25			
ø32			
ø40			
ø50	10/15/20/25 30/35/40/45/50	50	
ø63			
ø80			
ø100			

*1: The custom stroke is available in 1 mm increments. However, the total length is the same as that of the next longer standard stroke.
*2: When using the type with switch, refer to the table on the right.

Min. stroke with switch (2 switches)

Bore size (mm)	T0H/V / T5H/V	T2H/V / T3H/V
ø12	10(5)	5
ø16		
ø20	5	
ø25		
ø32		
ø40		
ø50		
ø63		
ø80		
ø100		

1: Less than 10 mm with the 2-color LED, off-delay, AC magnetic field proof, T1 or T8* switch is not available.
*2: Values in ( ) are for the type with 1 on rod side.

Custom stroke

● SSD2-W Series

Item	Standard products Standard stroke body with spacer	
Model No.	Refer to How to order.	
Description	A spacer is added to the standard stroke body to adjust the stroke in 1 mm increments.	
Stroke range	Bore size	Stroke range
	12/16	1 to 29
	20 to 25	1 to 49
	32 to 100	1 to 99
Example of model No.	Model No.: SSD2-W-32-38 A +2 mm spacer is added to the SSD2-W-32-40 standard cylinder to create 38 mm stroke. B + stroke is 63mm.	

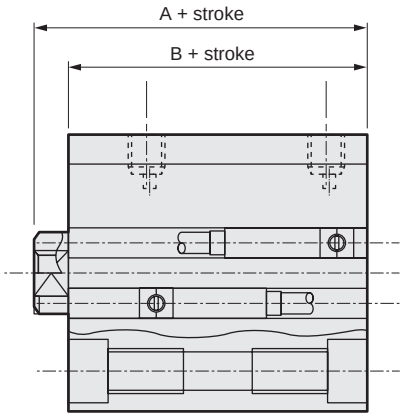

Switch specifications (F-switch)

● 1-color/2-color LED

Item	2-wire proximity	3-wire proximity	2-wire proximity		3-wire proximity		
	F2S	F3S	F2H/F2V	F2YH/F2YV	F3H/F3V	F3PH/F3PV (made to order)	F3YH/F3YV
Applications	Dedicated for programmable controller	For programmable controller, relay	Dedicated for programmable controller		For programmable controller, relay		
Output method	-	NPN output	-		NPN output	PNP output	NPN output
Power supply voltage	-	10 to 28 VDC	-		10 to 28 VDC	4.5 to 28 VDC	10 to 28 VDC
Load voltage	10 to 30 VDC	30 VDC or less	10 to 30 VDC	24 VDC ±10%	30 VDC or less		
Load current	5 to 20 mA	50 mA or less	5 to 20 mA		50 mA or less		
Indicator	LED (Lit when ON)		Yellow LED (Lit when ON)	Red/green LED (Lit when ON)	Yellow LED (Lit when ON)		Red/green LED (Lit when ON)
Leakage current	1 mA or less	10 μA or less	1 mA or less		10 μA or less		
Weight g	1 m:10 3 m:29						

Switch specifications (T-switch)

● 1-color/2-color LED/for AC magnetic field proof

Item	2-wire proximity	2-wire proximity			3-wire proximity				2-wire reed							2-wire proximity
	T1H/T1V	T2H/T2V/T2JH/T2JV	T2YH/T2YV	T2WH/T2WV	T3H/T3V	T3PH/T3PV	T3YH/T3YV	T3WH/T3WV	T0H/T0V		T5H/T5V		T8H/T8V			T2YD(*4) T2YDT
Applications	For programmable controller, relay, compact solenoid valve	Dedicated for programmable controller			For programmable controller, relay				For programmable controller, relay		For programmable controller, relay, IC circuit (no indicator lamp), serial connection		For programmable controller, relay			Dedicated for programmable controller
Output method	-				NPN output	PNP output	NPN output	NPN output	-							
Pwr. supp. V.	-				10 to 28 VDC				-							
Load voltage	85 to 265 VAC	10 to 30 VDC		24 VDC ±10%	30 VDC or less				12/24 VDC	100/110 VAC	5/12/24 VDC	100/110 VAC	12/24 VDC	110 VAC	220 VAC	24 VDC ±10%
Load current	5 to 100 mA	5 to 20 mA (*3)			100 mA or less		50 mA or less		5 to 50 mA	7 to 20 mA	50 mA or less	20 mA or less	5 to 50 mA	7 to 20 mA	7 to 10 mA	5 to 20 mA
Indicator	LED (Lit when ON)	LED (Lit when ON)	Red/green LED (Lit when ON)	Red/green LED (Lit when ON)	LED (Lit when ON)	Yellow LED (Lit when ON)	Red/green LED (Lit when ON)	Red/green LED (Lit when ON)	LED (Lit when ON)		No indicator lamp		LED (Lit when ON)			Red/green LED (Lit when ON)
Leakage current	≤ 1 mA at 100 VAC, ≤ 2 mA at 200 VAC	1 mA or less			10 μA or less				0 mA							1 mA or less
Weight g	1 m:33 3 m:87 5 m:142	1 m:18 3 m:49 5 m:80	1 m:33 3 m:87 5 m:142	1 m:18 3 m:49 5 m:80	1 m:18 3 m:49 5 m:80		1 m:33 3 m:87 5 m:142	1 m:18 3 m:49 5 m:80	1 m:18 3 m:49 5 m:80				1 m:33 3 m:87 5 m:142			1 m:61 3 m:166 5 m:272

*1 : Refer to Ending Page 1 for detailed switch specifications and dimensions.
*2 : Switches other than the above models, such as switches with connectors, are also available. Refer to Ending Page 1.
*3 : The max. load current is 20 mA at 25°C. The current is lower than 20 mA if the operating ambient temperature around the switch is higher than 25˚C. (5 to 10 mA at 60°C)
*4 : Switch for AC magnetic field (T2YD/T2YDT) cannot be used in DC magnetic field.
*5 : The F-switch uses a bend-resistant lead wire.

Cylinder weight table (the weight of the switches is when there are 2 cylinder switches.)

(Unit: g)

Stroke (mm)	5		10		15		20		25		30		35		40		45		50		75		100	
Bore size (mm)	No switch	Switch	No switch	Switch	No switch	Switch	No switch	Switch	No switch	Switch	No switch	Switch	No switch	Switch	No switch	Switch	No switch	Switch	No switch	Switch	No switch	Switch	No switch	Switch
ø12	37	87	45	87	54	96	62	104	71	113	73	115	-	-	-	-	-	-	-	-	-	-	-	-
ø16	49	105	60	105	70	115	81	126	92	137	103	148	-	-	-	-	-	-	-	-	-	-	-	-
ø20	65	120	77	152	90	165	103	178	115	190	128	203	141	216	154	229	167	242	205	280	-	-	-	-
ø25	90	181	105	196	121	212	137	228	163	244	168	259	184	275	200	291	216	307	231	322	-	-	-	-
ø32	126	240	148	262	170	284	192	306	213	327	235	349	257	371	279	393	301	415	322	436	494	542	604	652
ø40	189	332	216	359	242	385	269	412	296	439	322	465	348	491	375	518	401	544	478	571	646	695	776	825
ø50	-	-	354	548	396	590	438	632	480	674	523	717	565	759	607	801	649	843	691	885	1038	1095	1248	1305
ø63	-	-	543	822	598	877	653	932	708	987	763	1042	818	1097	874	1153	929	1208	984	1263	1474	1538	1749	1813
ø80	-	-	1002	1415	1089	1502	1175	1588	1262	1675	1348	1961	1435	1848	1522	1935	1609	2022	1695	2108	2475	2541	2907	2973
ø100	-	-	1558	2125	1672	2239	1785	2352	1899	2466	2013	2580	2127	2694	2240	2807	2354	2921	2468	3035	3531	3603	4098	4170

Total cylinder weight

Total weight = weight of cylinder 1 + weight of cylinder 2.

[Example: Total weight of SSD-W-25-30-N-10-N]

Weight of ø25 with 30 mm stroke:····(1)
Weight of ø25 with 10 mm stroke:····(2)
Total weight = (1) + (2) = 168 g + 105 g = 273 g

SCP*3
CMK2
CMA2
SCM
SCG
SCA2
SCS2
CKV2
CAV2/COVP/N2
SSD2
SSG
SSD
CAT
MDC2
MVC
SMG
MSD/MSDG
FC*
STK
SRL3
SRG3
SRM3
SRT3
MRL2
MRG2
SM-25
ShkAbs
FJ
FK
Spd Contr
Ending

How to order

No switch (without magnet for switch)

SSD2-W - 12 ○ - 30 — N - 5 — M - I

Total stroke S1 (30); 1st stage stroke S2 (5)

With switch (built-in magnet for switch)

SSD2-WL - 12 ○ - 30 - T0H - R - N - 5 - T0H - R - M - I

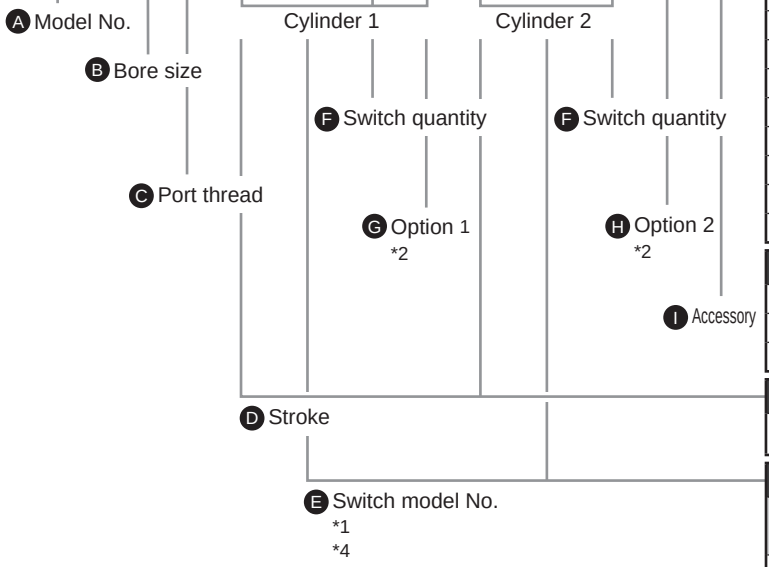

Precautions for model No. selection

1 : T2YD switch cannot be installed on ø12 and ø16. In addition, T8* switch cannot be installed on ø12 to ø32.
*2 : Piston rod of ø12 to ø25 is stainless steel as standard. C-snap ring is stainless steel instead of steel. The rod end male thread nut is stainless steel.
*3 : Refer to pages 750 and 751 for combinations of variations/options.
*4 : Switches are shipped with the product. Contact CKD if assembling before shipment is necessary.
*5 : F-switch cannot be selected.

[Example of model No.]

SSD2-WL-12-30-T0H-R-N-5-T0H-R-I

Model: Compact cylinder 2-stage

- B Bore size : ø12 mm
- C Port thread : Rc thread
- D Total stroke S1 : 30 mm
- E Switch model No. : Reed switch T0H, lead wire 1 m
- F Switch quantity : 1 on rod side
- G Option 1 : Rod end male thread
- D 1st stage stroke S2 : 5 mm
- 2nd stage stroke : 25 mm
- E Switch model No. : Reed switch T0H, lead wire 1 m
- F Switch quantity : 1 on rod side
- I Accessory : Rod eye

Cylinder 1

Cylinder 2

1st stage stroke	5 mm (S2)
+ 2nd stage stroke	25 mm
Total stroke	30 mm (S1)

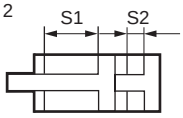

Code	Description
A Model No.	
SSD2-W	Double acting/2-stage
SSD2-WL	Double acting/2-stage/with switch
B Bore size (mm)	
12	ø12
16	ø16
20	ø20
25	ø25
32	ø32
40	ø40
50	ø50
63	ø63
80	ø80
100	ø100
C Port thread	
Blank	Rc thread
NN	NPT thread (ø32 and over) (made-to-order product)
GN	G thread (ø32 and over) (made-to-order product)
D Stroke (mm)	
Refer to the stroke table on the following page.	

E Switch model No.

Lead wire Straight	Lead wire L-shaped	Contact	Voltage AC	Voltage DC		Lead wire	Bore size 12	16	20	25	32	40	50	63	80	100
-	F2S*	Proximity		●	1-color LED	2-wire			●	●						
-	F3S*	Proximity		●	1-color LED	3-wire			●	●						
F2H*	F2V*	Proximity		●	1-color LED	2-wire			●	●						
F3H*	F3V*	Proximity		●	1-color LED	3-wire			●	●						
F3PH*	F3PV*	Proximity		●	1-color LED (PNP output) (custom)	3-wire			●	●						
F2YH*	F2YV*	Proximity		●	2-color LED	2-wire			●	●						
F3YH*	F3YV*	Proximity		●	2-color LED	3-wire			●	●						
T0H*	T0V*	Reed	●	●	1-color LED	2-wire	●	●	●	●	●	●	●	●	●	●
T5H*	T5V*	Reed	●	●	no indicator lamp	2-wire	●	●	●	●	●	●	●	●	●	●
T8H*	T8V*	Reed	●	●	1-color LED	2-wire						●	●	●	●	●
T1H*	T1V*	Proximity	●		1-color LED	2-wire			●	●	●	●	●	●	●	●
T2H*	T2V*	Proximity		●	1-color LED	2-wire	●	●	●	●	●	●	●	●	●	●
T3H*	T3V*	Proximity		●	1-color LED	3-wire	●	●	●	●	●	●	●	●	●	●
T3PH*	T3PV*	Proximity		●	1-color LED (PNP output)	3-wire	●	●	●	●	●	●	●	●	●	●
T2WH*	T2WV*	Proximity		●	2-color LED	2-wire	●	●	●	●	●	●	●	●	●	●
T2YH*	T2YV*	Proximity		●	2-color LED	2-wire			●	●	●	●	●	●	●	●
T3WH*	T3WV*	Proximity		●	2-color LED	3-wire	●	●	●	●	●	●	●	●	●	●
T3YH*	T3YV*	Proximity		●	2-color LED	3-wire			●	●	●	●	●	●	●	●
T2YD*	-	Proximity		●	2-color LED (AC magnetic field)	2-wire			●	●	●	●	●	●	●	●
T2YDT*	-	Proximity		●	2-color LED (AC magnetic field)	2-wire			●	●	●	●	●	●	●	●
T2JH*	T2JV*	Proximity		●	1-color LED off-delay	2-wire			●	●	●	●	●	●	●	●

*** Lead wire length**	
Blank	1 m (standard)
3	3 m (option)
5	5 m (option) *5
F Switch quantity	
R	1 on rod side
H	1 on head side
D	2
G Option 1	
Blank	Rod end female thread
N	Rod end male thread
H Option 2	*2
M	Piston rod material (stainless steel)
I Accessory (available when rod end male thread "N" is selected)	
I	Rod eye
Y	Rod clevis (pin and snap ring included)

[Stroke table]

Stroke (mm)		Applicable bore size									
		ø12	ø16	ø20	ø25	ø32	ø40	ø50	ø63	ø80	ø100
Standard stroke	5	●	●	●	●	●	●				
	10	●	●	●	●	●	●	●	●	●	●
	15	●	●	●	●	●	●	●	●	●	●
	20	●	●	●	●	●	●	●	●	●	●
	25	●	●	●	●	●	●	●	●	●	●
	30	●	●	●	●	●	●	●	●	●	●
	35			●	●	●	●	●	●	●	●
	40			●	●	●	●	●	●	●	●
	45			●	●	●	●	●	●	●	●
	50			●	●	●	●	●	●	●	●
Min. stroke (mm)		1									
Max. stroke (mm)		30		50							
Custom stroke *1		In 1 mm increments									

1 : Less than 5 mm with 1-color LED switch and less than 10 mm with the 2-color LED, off-delay, AC magnetic field proof, T1 or T8* switch are not available.
Refer to page 902 for the number of installed switches and the min. stroke.
*2 : The total length is the same as that of the next longer standard stroke.

How to order switch

SW - T0H

Switch model No.
(Item Ⓔ on page 904)

Internal structure and parts list

● SSD2-WL-12 to 50 (double acting/2-stage/with switch)

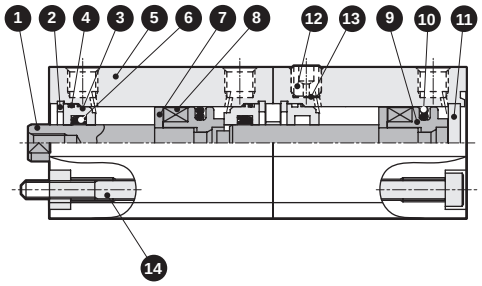

● SSD2-WL-63 to 100 (double acting/2-stage/with switch)

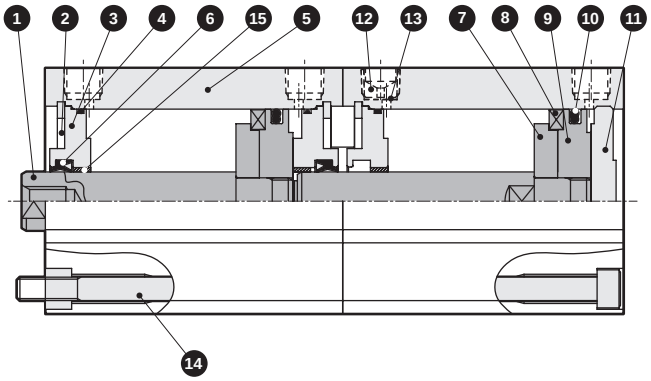

● SSD2-W-12 to 50 (double acting/2-stage)

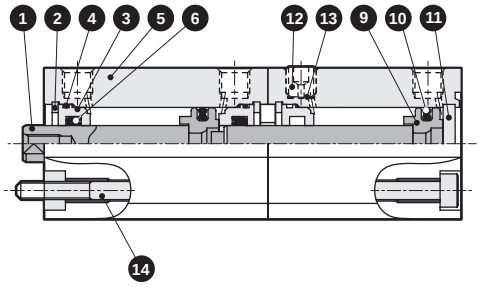

● SSD2-W-63 to 100 (double acting/2-stage)

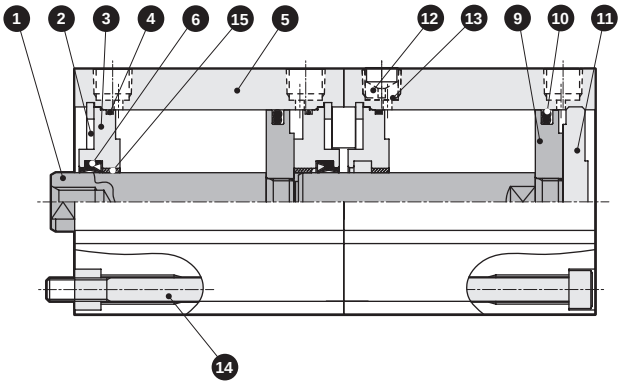

No.	Part name	Material	Remarks
1	Piston rod	ø12 to ø25: Stainless steel ø32 to ø100: Steel	ø16 to ø100 Industrial chrome plating
2	C-snap ring	Steel	Zinc phosphate
3	Rod metal	ø12 to ø50: Special aluminum ø63 to ø100: Aluminum alloy	ø12 to ø50: Alumite ø63 to ø100: Chromate
4	Rod metal gasket	Nitrile rubber	
5	Body	Aluminum alloy	Hard alumite
6	Rod packing	Nitrile rubber	
7	Spacer	Aluminum alloy	Chromate
8	Magnet	Plastic	

No.	Part name	Material	Remarks
9	Piston	Aluminum alloy	Chromate
10	Piston packing	Nitrile rubber	
11	Cover	ø12 to 25: Stainless steel ø32 to ø100: Aluminum alloy	ø32 to ø100 Alumite
12	Plug	Stainless steel	
13	Stainless steel mesh	Stainless steel	
14	Hexagon socket head cap screw	Steel	Black finish
15	Bush	Oiles drymet	

Repair parts list

Bore size (mm)	Kit No.	Repair parts No.
ø12	SSD2-W-12K	4 6 10
ø16	SSD2-W-16K	
ø20	SSD2-W-20K	
ø25	SSD2-W-25K	
ø32	SSD2-W-32K	
ø40	SSD2-W-40K	
ø50	SSD2-W-50K	
ø63	SSD2-W-63K	
ø80	SSD2-W-80K	
ø100	SSD2-W-100K	

SSD2-W application examples

Pressure setting: P2 > P1

● 1st stage push
Keeping port 4 pressurized, pressurize port 1.

● 2nd stage push
Keeping port 1 pressurized, pressurize port 3.

It may not be P2 = P1 depending on the load direction. When using a single acting cylinder with free fall load, ports 2 and 4 in the upper figure and ports 2 and 3 in the lower figure are breathing holes. Port 2, which basically needs no piping as a rule, is plugged with a filter.

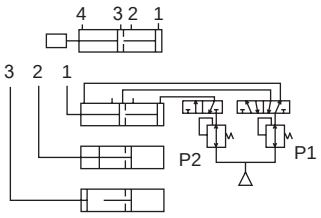

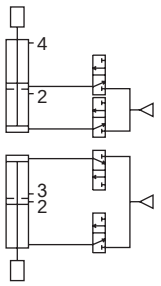

Dimensions

● SSD2-WL-12 to 25 (with switch T0H/V, T5H/V, T2H/V, T3H/V)

ø12/ø16

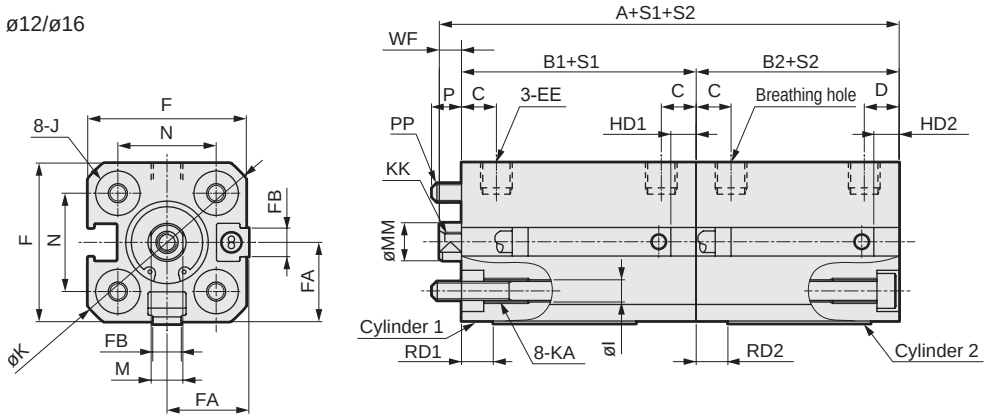

● Rod end male thread

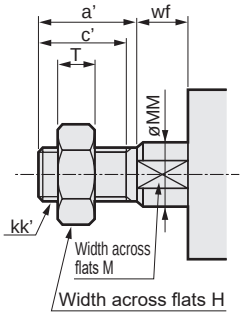

ø20/ø25

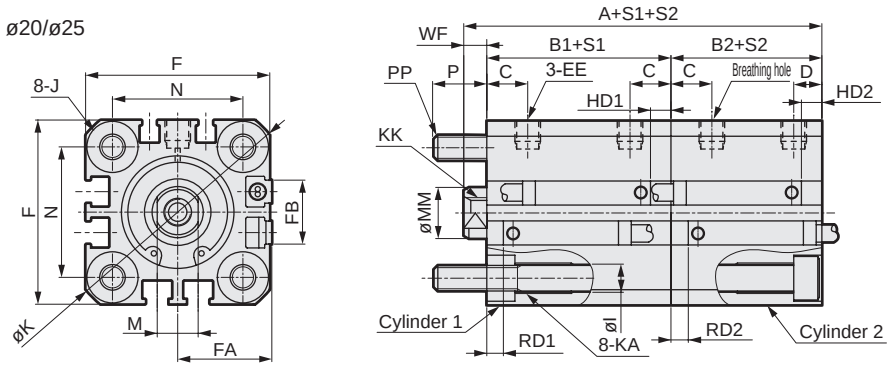

Code / Bore size (mm)	Common dimensions with switch																			
	A	B1	B2	C	D	EE	F	FA *3	FB	I	J	K	KA	KK	M	MM	N	WF	P	PP
ø12	52.5	27	22	5.5	5.5	M5	25	13(16.5)	4.5	3.5	6.5 spot face depth 3.5	32	M4 depth 7	M3 depth 6	5	6	15.5	3.5	4.5	M3
ø16	52.5	27	22	5.5	5.5	M5	29	15(18.5)	4.5	3.5	6.5 spot face depth 3.5	38	M4 depth 7	M4 depth 8	6	8	20	3.5	4.5	M3
ø20	70	36	29.5	8	5.5	M5	36	18.5(22)	12.5	5.5	9 spot face depth 5.5	47	M6 depth 11	M5 depth 7	8	10	25.5	4.5	10	M5
ø25	76.5	39	32.5	11	6	M5	40	20.5(24)	13.5	5.5	9 spot face depth 5.5	51	M6 depth 11	M6 depth 12	10	12	28	5	9	M5

Switch dimensions	Reed T0H/TOV, T5H/T5V			Proximity T2H/T2V, T3H/T3V			Proximity T2WH/T2WV, T3WH/T3WV			Proximity F2H/F2V, F3H/F3V, F2YH/F2YV, F3YH/F3YV		
Bore size (mm)	RD1, RD2	HD1	HD2	RD1, RD2	HD1	HD2	RD1, RD2	HD1	HD2	RD1, RD2	HD1	HD2
ø12	1.5	6.5	1.5	1.5	6.5	1.5	3.5	8.5	3.5			
ø16	3.5	4.5	0	3.5	4.5	0	5.5	6.5	1.5			
ø20	7.5	9.5	3	7.5	9.5	3	9.5	11.5	5	12	14	7.5
ø25	9.5	10.5	4	9.5	10.5	4	11.5	12.5	6	14	15	8.5

Switch dimensions	Proximity F2S/F3S			Proximity T2YH/T2YV/ T3YH/T3YV/T2JH/T2JV			AC magnetic field proof T2YD/T2YDT/T1H/T1V		
Bore size (mm)	RD1, RD2	HD1	HD2	RD1, RD2	HD1	HD2	RD1, RD2	HD1	HD2
ø12				-	-	-	-	-	-
ø16				-	-	-	-	-	-
ø20	11	13	6.5	6.5	8.5	2	6.5	8.5	2
ø25	13	14	7.5	8.5	9.5	3	8.5	9.5	3

*1 : To calculate A + S1 + S2, B1 + S1 or B2 + S2 when using custom stroke, apply the next longer standard stroke (instead of the custom stroke) to the stroke.
(Example) If the custom stroke is 7 mm, apply the standard stroke of 10 mm.
*2 : HD and RD dimensions for 5 mm stroke differ from these dimensions according to the setting.
*3 : Dimensions in ( ) of FA are for the L-shaped lead wire.
*4 : For dimensions of individual accessories, refer to pages 1046 to 1049.
*5 : Only F-switch is available for the ø20 or ø25 piping port surface.

● Rod end male thread

Code / Bore size (mm)	a'	c'	H	kk'	M	MM	T	wf
ø12	10.5	9	8	M5	5	6	3.2	3.5
ø16	12	10	10	M6	6	8	3.6	3.5
ø20	14	12	13	M8	8	10	5	4.5
ø25	17.5	15	17	M10x1.25	10	12	6	5

SCP*3
CMK2
CMA2
SCM
SCG
SCA2
SCS2
CKV2
CAV2/COVP/N2
SSD2
SSG
SSD
CAT
MDC2
MVC
SMG
MSD/MSDG
FC*
STK
SRL3
SRG3
SRM3
SRT3
MRL2
MRG2
SM-25
ShkAbs
FJ
FK
Spd Contr
Ending

Dimensions

● SSD2-W-12 to 25 (without switch)

ø12/ø16

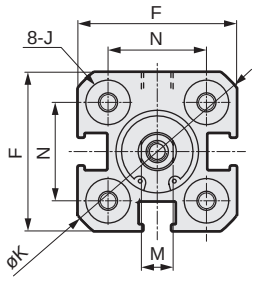

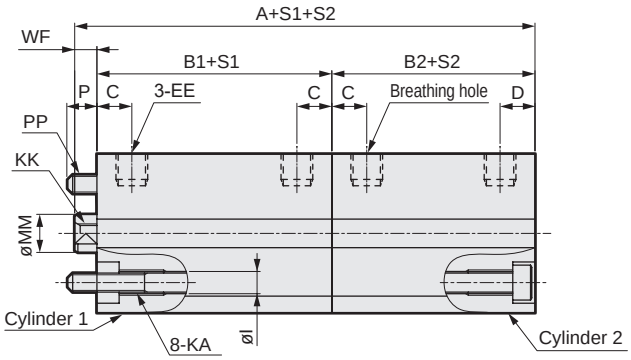

● Rod end male thread

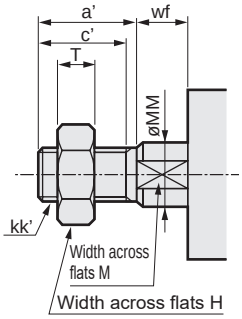

ø20/ø25

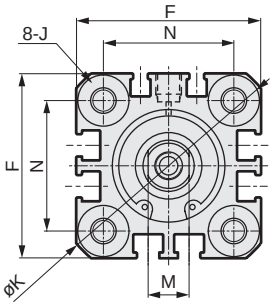

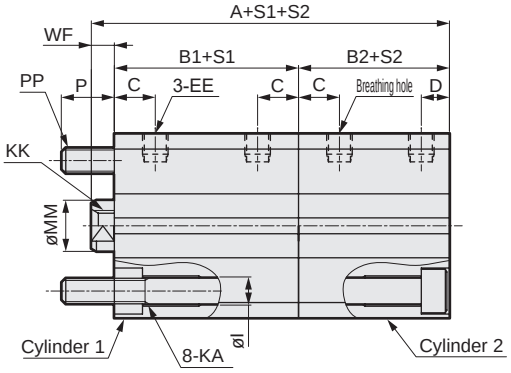

Code / Bore size (mm)	Dimensions without switch and common dimensions																	
	A	B1	B2	C	D	EE	F	I	J	K	KA	KK	M	MM	N	WF	P	PP
ø12	42.5	22	17	5.5	5.5	M5	25	3.5	6.5 spot face depth 3.5	32	M4 depth 7	M3 depth 6	5	6	15.5	3.5	4.5	M3
ø16	42.5	22	17	5.5	5.5	M5	29	3.5	6.5 spot face depth 3.5	38	M4 depth 7	M4 depth 8	6	8	20	3.5	4.5	M3
ø20	50	26	19.5	8	5.5	M5	36	5.5	9 spot face depth 5.5	47	M6 depth 11	M5 depth 7	8	10	25.5	4.5	10	M5
ø25	56.5	29	22.5	11	6	M5	40	5.5	9 spot face depth 5.5	51	M6 depth 11	M6 depth 12	10	12	28	5	9	M5

● Rod end male thread

Code / Bore size (mm)	a'	c'	H	kk'	M	MM	T	wf
ø12	10.5	9	8	M5	5	6	3.2	3.5
ø16	12	10	10	M6	6	8	3.6	3.5
ø20	14	12	13	M8	8	10	5	4.5
ø25	17.5	15	17	M10x1.25	10	12	6	5

*1 : To calculate A + S1 + S2, B1 + S1 or B2 + S2 when using custom stroke, apply the next longer standard stroke (instead of the custom stroke) to the stroke.
(Example) If the custom stroke is 7 mm, apply the standard stroke of 10 mm.

*2 : For dimensions of individual accessories, refer to pages 1046 to 1049.

Dimensions

● SSD2-WL-32 to 100 (with switch T0H/V, T5H/V, T2H/V, T3H/V)

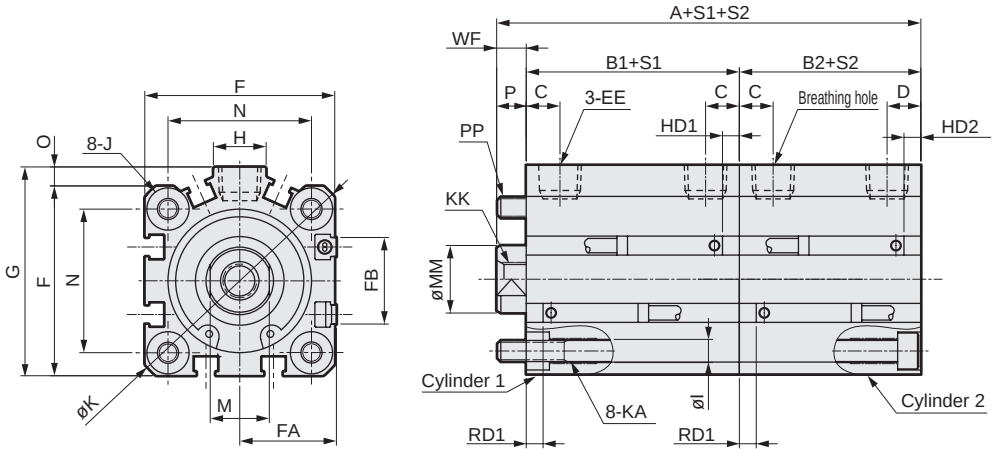

● Rod end male thread

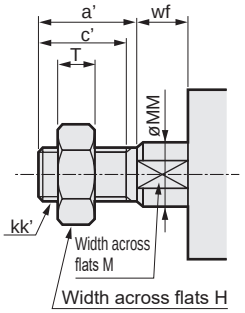

● SSD2-W-32 to 100 (without switch)

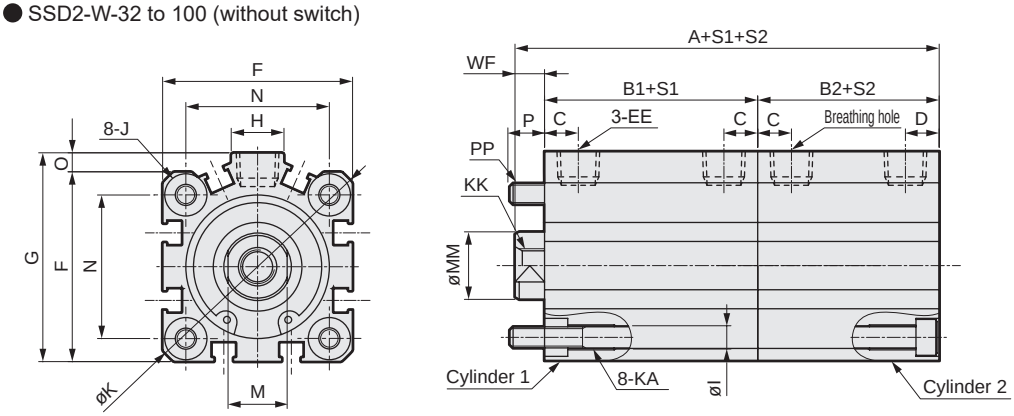

Code / Bore size (mm)	No switch A	No switch B1	No switch B2	Common dimensions with switch A	B1	B2	C *7	D *7	EE	F	FA *3	FB	G	H	I	J	K	KA	KK	M	MM	N	O	WF	P	PP
ø32	60.5	30.5	23	80.5	40.5	33	8(11)	8(5.5)	Rc1/8 *7	45	23(26.5)	20.5	49.5	12.5	5.5	9 spot face depth 5.5	60	M6 depth 11	M8 depth 13	14	16	34	4.5	7	7	M5
ø40	76.5	40	29.5	96.5	50	39.5	12(11.5)	8.5(8)	Rc1/8	52	26.5(30)	27.5	57	15	5.5	9 spot face depth 5.5	69	M6 depth 11	M8 depth 13	14	16	40	5	7	6	M5
ø50	79	40.5	30.5	99	50.5	40.5	10.5	10.5	Rc1/4	64	32.5(36)	28.5	71	18	6.9	11 spot face depth 6.5	86	M8 depth 13	M10 depth 15	17	20	50	7	8	10.5	M6
ø63	86	42	36	106	52	46	13	11	Rc1/4	77	39(42.5)	28.5	84	23	8.7	14 spot face depth 9	103	M10 depth 25	M10 depth 15	17	20	60	7	8	11	M8
ø80	104.5	51	43.5	124.5	61	53.5	16	13	Rc3/8	98	49.5(53)	28.5	104	31	10.5	17.5 spot face depth 11	132	M12 depth 28	M16 depth 21	22	25	77	6	10	11.5	M10
ø100	125.5	60.5	53	145.5	70.5	63	23	15	Rc3/8	117	59(62.5)	28.5	123.5	38	10.5	17.5 spot face depth 11	156	M12 depth 28	M20 depth 27	27	30	94	6.5	12	12.5	M10

Switch dimensions / Bore size (mm)	Reed T0H/TOV, T5H/T5V RD1, RD2	HD1	HD2	Proximity T2H/T2V, T3H/T3V RD1, RD2	HD1	HD2	Proximity T2WH/T2WV, T3WH/T3WV RD1, RD2	HD1	HD2	Proximity T2YH/T2YV/ T3YH/T3YV/T2JH/T2JV RD1, RD2	HD1	HD2	Reed T8H/T8V RD1, RD2	HD1	HD2
ø32	10	11.5	4	10	11.5	4	12	13.5	6	8.5	11	3.5	-	-	-
ø40	13	18	7.5	13	18	7.5	15	20	9.5	10.5	16	5.5	6	11.5	1
ø50	13	18.5	8.5	13	18.5	8.5	15	20.5	10.5	11	16	6	6.5	11.5	1.5
ø63	13.5	19.5	13.5	13.5	19.5	13.5	15.5	21.5	15.5	11.5	17	11	7	12.5	6.5
ø80	16	26	18.5	16	26	18.5	18	28	20.5	14	23.5	16	9.5	19	11.5
ø100	20.5	31.5	24	20.5	31.5	24	22.5	33.5	26	18	29	21.5	13.5	24.5	17

Switch dimensions / Bore size (mm)	AC magnetic field proof T2YD/T2YDT/T1H/T1V RD1, RD2	HD1	HD2
ø32	8.5	11	3.5
ø40	10.5	16	5.5
ø50	11	16	6
ø63	11.5	17	11
ø80	14	23.5	16
ø100	18	29	21.5

*1 : To calculate A + S1 + S2, B1 + S1 or B2 + S2 when using custom stroke, apply the next longer standard stroke (instead of the custom stroke) to the stroke. (Example) If the custom stroke is 7 mm, apply the standard stroke of 10 mm.
*2 : HD and RD dimensions for 5 mm stroke differ from these dimensions according to the setting.
*3 : Dimensions in ( ) of FA are for the L-shaped lead wire.
*4 : For dimensions of individual accessories, refer to pages 1046 to 1049.
*5 : Dimensions in ( ) of codes A and B are for strokes of more than 50 mm.
*6 : The ø32 bore size with a 5 mm stroke and without a switch has a port size of M5.*7 :

● Rod end male thread

Code / Bore size (mm)	a'	c'	H	kk'	M	MM	T	wf
ø32	23.5	20.5	22	M14x1.5	14	16	8	5
ø40	23.5	20.5	22	M14x1.5	14	16	8	5
ø50	28.5	26	27	M18x1.5	17	20	11	5
ø63	28.5	26	27	M18x1.5	17	20	11	5
ø80	35.5	32.5	32	M22x1.5	22	25	13	8
ø100	35.5	32.5	41	M26x1.5	27	30	16	8

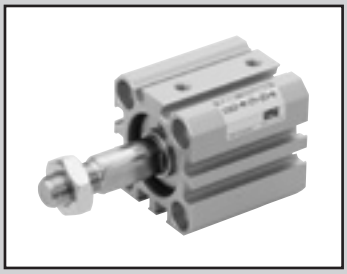

Compact cylinder double acting/rotation-stop

SSD2-M Series

● Bore size: ø12/ø16/ø20/ø25
ø32/ø40/ø50/ø63

JIS symbol

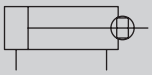

RoHS CAD

Specifications

1 MPa = 10 bar

Item	SSD2-M SSD2-ML (with switch)							
Bore size mm	ø12	ø16	ø20	ø25	ø32	ø40	ø50	ø63
Actuation	Double acting							
Working fluid	Compressed air							
Max. working pressure MPa	1.0 (≈150 psi, 10 bar)							
Min. working pressure MPa	0.1 (≈15 psi, 1 bar)							0.05 (≈7.3 psi)
Proof pressure MPa	1.6 (≈230 psi, 16 bar)							
Ambient temperature °C	-10 (14°F) to 60 (140°F) (no freezing)							
Port size	M5				Rc1/8 *1		Rc1/4	
Stroke tolerance mm	+1.0 0							
Working piston speed mm/s	50 to 500							50 to 300
Cushion	None							
Lubrication	Not required (use turbine oil class 1 ISO VG32 if necessary for lubrication)							
Non-rotating accuracy (*2)	±1°		±0.7°		±0.8°			
Allowable absorbed energy J	0.004	0.01	0.016	0.021	0.025	0.092	0.1	0.12

*1: The ø32 bore size with a 5 mm stroke and without a switch has a port size of M5.*2: Initial value at the pull end.

Stroke

Bore size (mm)	Standard stroke (mm)	Max. stroke (mm)	Min. stroke (mm)
ø12	5/10/15/20	30	1
ø16	25/30		
ø20	5/10/15/20/25	50	
ø25	30/35/40/45/50		
ø32	5/10/15/20/25/30/	100	
ø40	35/40/45/50/75/100		
ø50	10/15/20/25/30		
ø63	35/40/45/50/75/100		

*1: When using the type with switch, refer to the table of the min. stroke with switch.

Min. stroke with switch (2 switches)

Bore size (mm)	T0H/V / T5H/V	T2H/V / T3H/V
ø12	10(5)	5
ø16		
ø20	5	
ø25		
ø32		
ø40		
ø50		
ø63		

1: Less than 10 mm with the 2-color LED, off-delay, AC magnetic field proof, T1 or T8* switch is not available.
*2: Values in ( ) are for the type with 1 on rod side.

Custom stroke

● SSD2-M Series

Item	Standard products Standard stroke body with spacer	
Model No.	Refer to How to order.	
Description	A spacer is added to the standard stroke body to adjust the stroke in 1 mm increments.	
Stroke range	Bore size	Stroke range
	12/16	1 to 29
	20 to 25	1 to 49
	32 to 63	1 to 99
Example of model No.	Model No.: SSD2-M-32-38 A +2 mm spacer is added to the SSD2-M-32-40 standard cylinder to create 38 mm stroke. B + stroke is 72 mm.	

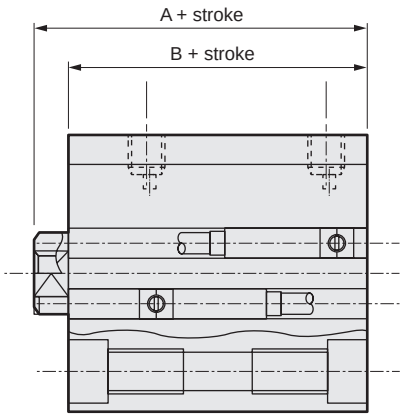

Switch specifications (F-switch)

● 1-color/2-color LED

Item	2-wire proximity	3-wire proximity	2-wire proximity		3-wire proximity		
	F2S	F3S	F2H/F2V	F2YH/F2YV	F3H/F3V	F3PH/F3PV (made to order)	F3YH/F3YV
Applications	Dedicated for programmable controller	For programmable controller, relay	Dedicated for programmable controller		For programmable controller, relay		
Output method	-	NPN output	-		NPN output	PNP output	NPN output
Power supply voltage	-	10 to 28 VDC	-		10 to 28 VDC	4.5 to 28 VDC	10 to 28 VDC
Load voltage	10 to 30 VDC	30 VDC or less	10 to 30 VDC	24 VDC ±10%	30 VDC or less		
Load current	5 to 20 mA	50 mA or less	5 to 20 mA			50 mA or less	
Indicator	LED (Lit when ON)		Yellow LED (Lit when ON)	Red/green LED (Lit when ON)	Yellow LED (Lit when ON)		Red/green LED (Lit when ON)
Leakage current	1 mA or less	10 μA or less	1 mA or less		10 μA or less		
Weight g	1 m:10 3 m:29						

Switch specifications (T-switch)

● 1-color/2-color LED/for AC magnetic field proof

Item	2-wire proximity	2-wire proximity			3-wire proximity				2-wire reed							2-wire proximity
	T1H/T1V	T2H/T2V/ T2JH/T2JV	T2YH/ T2YV	T2WH/ T2WV	T3H/ T3V	T3PH/ T3PV	T3YH/ T3YV	T3WH/ T3WV	T0H/T0V		T5H/T5V		T8H/T8V			T2YD(*4) T2YDT
Applications	For programmable controller, relay, compact solenoid valve	Dedicated for programmable controller			For programmable controller, relay				For programmable controller, relay		For programmable controller, relay, IC circuit (no indicator lamp), serial connection		For programmable controller, relay			Dedicated for programmable controller
Output method	-				NPN output	PNP output	NPN output	NPN output	-							
Pwr. supp. V.	-				10 to 28 VDC				-							
Load voltage	85 to 265 VAC	10 to 30 VDC		24 VDC ±10%	30 VDC or less				12/24 VDC	100/110 VAC	5/12/24 VDC	100/110 VAC	12/24 VDC	110 VAC	220 VAC	24 VDC ±10%
Load current	5 to 100 mA	5 to 20 mA (*3)			100 mA or less		50 mA or less		5 to 50 mA	7 to 20 mA	50 mA or less	20 mA or less	5 to 50 mA	7 to 20 mA	7 to 10 mA	5 to 20 mA
Indicator	LED (Lit when ON)	LED (Lit when ON)	Red/green LED (Lit when ON)	Red/green LED (Lit when ON)	LED (Lit when ON)	Yellow LED (Lit when ON)	Red/green LED (Lit when ON)	Red/green LED (Lit when ON)	LED (Lit when ON)		No indicator lamp		LED (Lit when ON)			Red/green LED (Lit when ON)
Leakage current	≤ 1 mA at 100 VAC, ≤ 2 mA at 200 VAC	1 mA or less			10 μA or less				0 mA							1 mA or less
Weight g	1 m:33 3 m:87 5 m:142	1 m:18 3 m:49 5 m:80	1 m:33 3 m:87 5 m:142	1 m:18 3 m:49 5 m:80	1 m:18 3 m:49 5 m:80		1 m:33 3 m:87 5 m:142	1 m:18 3 m:49 5 m:80	1 m:18 3 m:49 5 m:80				1 m:33 3 m:87 5 m:142			1 m:61 3 m:166 5 m:272

*1 : Refer to Ending Page 1 for detailed switch specifications and dimensions.
*2 : Switches other than the above models, such as switches with connectors, are also available. Refer to Ending Page 1.
*3 : The max. load current is 20 mA at 25°C. The current is lower than 20 mA if the operating ambient temperature around the switch is higher than 25˚C. (5 to 10 mA at 60°C)
*4 : Switch for AC magnetic field (T2YD/T2YDT) cannot be used in DC magnetic field.
*5 : The F-switch uses a bend-resistant lead wire.

Cylinder weight table (the weight of the switches is when there are 2 cylinder switches.)

(Unit: g)

Stroke (mm)	5		10		15		20		25		30		35		40		45		50		75		100	
Bore size (mm)	No switch	Switch	No switch	Switch	No switch	Switch	No switch	Switch	No switch	Switch	No switch	Switch	No switch	Switch	No switch	Switch	No switch	Switch	No switch	Switch	No switch	Switch	No switch	Switch
ø12	44	94	52	94	61	103	69	11	78	120	80	122	-	-	-	-	-	-	-	-	-	-	-	-
ø16	58	114	69	114	79	124	90	135	101	146	112	157	-	-	-	-	-	-	-	-	-	-	-	-
ø20	76	131	88	163	101	176	114	189	126	201	139	214	152	227	165	240	178	253	191	266	-	-	-	-
ø25	102	193	117	208	133	224	149	240	165	256	180	271	196	287	212	303	228	319	243	334	-	-	-	-
ø32	166	280	188	302	210	324	232	346	253	367	275	389	297	411	319	433	341	455	362	476	575	583	682	691
ø40	-	-	210	353	237	380	263	406	290	433	317	460	343	486	370	513	396	539	423	566	683	698	815	831
ø50	-	-	341	535	383	577	425	619	467	661	509	703	552	746	594	788	636	830	678	872	1065	1082	1275	1292
ø63	-	-	507	786	562	841	617	896	672	951	727	1006	782	1061	837	1116	893	1172	948	1227	1478	1502	1753	1777

Theoretical thrust table

(Unit: N)

Bore size (mm)	Operating direction	Working pressure MPa											
		0.05	0.1	0.15	0.2	0.3	0.4	0.5	0.6	0.7	0.8	0.9	1.0
ø12	Push	-	11.3	17.0	22.6	33.9	45.2	56.5	67.9	79.2	90.5	$1.02x10^2$	$1.13x10^2$
	Pull	-	8.48	12.7	17.0	25.4	33.9	42.4	50.9	59.4	67.9	76.3	84.8
ø16	Push	-	20.1	30.2	40.2	60.3	80.4	$1.01x10^2$	$1.21x10^2$	$1.41x10^2$	$1.61x10^2$	$1.81x10^2$	$2.01x10^2$
	Pull	-	15.1	22.6	30.2	45.2	60.3	75.4	90.5	$1.06x10^2$	$1.21x10^2$	$1.36x10^2$	$1.51x10^2$
ø20	Push	-	31.4	47.1	62.8	94.2	$1.26x10^2$	$1.57x10^2$	$1.88x10^2$	$2.20x10^2$	$2.51x10^2$	$2.83x10^2$	$3.14x10^2$
	Pull	-	23.6	35.3	47.1	70.7	94.2	$1.18x10^2$	$1.41x10^2$	$1.65x10^2$	$1.88x10^2$	$2.12x10^2$	$2.36x10^2$
ø25	Push	-	49.1	73.6	98.2	$1.47x10^2$	$1.96x10^2$	$2.45x10^2$	$2.95x10^2$	$3.44x10^2$	$3.93x10^2$	$4.42x10^2$	$4.91x10^2$
	Pull	-	37.8	56.7	75.6	$1.13x10^2$	$1.51x10^2$	$1.89x10^2$	$2.27x10^2$	$2.64x10^2$	$3.02x10^2$	$3.40x10^2$	$3.78x10^2$
ø32	Push	-	80.4	$1.21x10^2$	$1.61x10^2$	$2.41x10^2$	$3.22x10^2$	$4.02x10^2$	$4.83x10^2$	$5.63x10^2$	$6.43x10^2$	$7.24x10^2$	$8.04x10^2$
	Pull	-	60.3	90.5	$1.21x10^2$	$1.81x10^2$	$2.41x10^2$	$3.02x10^2$	$3.62x10^2$	$4.22x10^2$	$4.83x10^2$	$5.43x10^2$	$6.03x10^2$
ø40	Push	-	$1.26x10^2$	$1.88x10^2$	$2.51x10^2$	$3.77x10^2$	$5.03x10^2$	$6.28x10^2$	$7.54x10^2$	$8.80x10^2$	$1.01x10^3$	$1.13x10^3$	$1.26x10^3$
	Pull	-	$1.06x10^2$	$1.58x10^2$	$2.11x10^2$	$3.17x10^2$	$4.22x10^2$	$5.28x10^2$	$6.33x10^2$	$7.39x10^2$	$8.44x10^2$	$9.50x10^2$	$1.06x10^3$
ø50	Push	-	$1.96x10^2$	$2.95x10^2$	$3.93x10^2$	$5.89x10^2$	$7.85x10^2$	$9.82x10^2$	$1.18x10^3$	$1.37x10^3$	$1.57x10^3$	$1.77x10^3$	$1.96x10^3$
	Pull	-	$1.65x10^2$	$2.47x10^2$	$3.30x10^2$	$4.95x10^2$	$6.60x10^2$	$8.25x10^2$	$9.90x10^2$	$1.15x10^3$	$1.32x10^3$	$1.48x10^3$	$1.65x10^3$
ø63	Push	$1.56x10^2$	$3.12x10^2$	$4.68x10^2$	$6.23x10^2$	$9.35x10^2$	$1.25x10^3$	$1.56x10^3$	$1.87x10^3$	$2.18x10^3$	$2.49x10^3$	$2.81x10^3$	$3.12x10^3$
	Pull	$1.40x10^2$	$2.80x10^2$	$4.20x10^2$	$5.61x10^2$	$8.41x10^2$	$1.12x10^3$	$1.40x10^3$	$1.68x10^3$	$1.96x10^3$	$2.24x10^3$	$2.52x10^3$	$2.80x10^3$

How to order

No switch (without magnet for switch)

SSD2-M - 12 ◯ - 5 ———— N - LB - I

With switch (built-in magnet for switch)

SSD2-ML - 12 ◯ - 5 - T0H - R - N - LB - I

- Ⓐ Model No.
- Ⓑ Bore size
- Ⓒ Port thread
- Ⓓ Stroke
- Ⓔ Switch model No. *1 *2 *3 *8 *9
- Ⓕ Switch quantity
- Ⓖ Option *4
- Ⓗ Mounting bracket *5 *6
- Ⓘ Accessory *7

Precautions for model No. selection

1 : The T2YD switch cannot be mounted on the ø12 and ø16 bore sizes.
2 : The T8 switch cannot be mounted on the ø12 to ø32 bore sizes.
*3 : The F-switch can only be mounted on the piping port surface of bore sizes ø20 and ø25.
*4 : Piston rod of ø12 to ø25 is stainless steel as standard. C-snap ring is stainless steel instead of steel. The rod end male thread nut is stainless steel.
*5 : The mounting bracket is included at shipment.
*6 : The projection dimension of piston rod WF when LB or FA is selected is different from that of the standard. Refer to the dimensions on pages 917, 919, 921 and 922. The number of the specified protruding dimension will be added at the end of the model No. printed on the metal plate on the body.
*7 : "I" and "Y" cannot be selected together.
*8 : The F-switch with L type lead wire on ø20 models cannot be selected on strokes 10 mm or under.
*9 : Switches are shipped with the product. Contact CKD if assembling before shipment is necessary.
*10: Refer to pages 750 and 751 for combinations of variations/options.
*11 : F-switch cannot be selected.

[Example of model No.]

SSD2-ML-12-5-T0H-R-N-LB-I

Model: Compact cylinder rotation-stop

- Ⓑ Bore size : ø12 mm
- Ⓒ Port thread : Rc thread
- Ⓓ Stroke : 5 mm
- Ⓔ Switch model No. : Reed T0H switch
- Ⓕ Switch quantity : 1 on rod side
- Ⓖ Option : Rod end male thread
- Ⓗ Mounting bracket : Axial foot
- Ⓘ Accessory : Rod eye

Code	Description
Ⓐ Model No.	
SSD2-M	Double acting/rotation-stop
SSD2-ML	Double acting/rotation-stop/with switch
Ⓑ Bore size (mm)	
12	ø12
16	ø16
20	ø20
25	ø25
32	ø32
40	ø40
50	ø50
63	ø63
Ⓒ Port thread	
Blank	Rc thread
NN	NPT thread (ø32 and over) (made-to-order product)
GN	G thread (ø32 and over) (made-to-order product)
Ⓓ Stroke (mm)	
Refer to the stroke table on the following page.	

Ⓔ Switch model No.

Lead wire Straight	Lead wire L-shaped	Contact	Voltage AC	Voltage DC	Indicator	Lead wire	Bore size 12	16	20	25	32	40	50	63
-	F2S*	Proximity		●	1-color LED	2-wire			●	●				
-	F3S*	Proximity		●	1-color LED	3-wire			●	●				
F2H*	F2V*	Proximity		●	1-color LED	2-wire			●	●				
F3H*	F3V*	Proximity		●	1-color LED	3-wire			●	●				
F3PH*	F3PV*	Proximity		●	1-color LED (PNP output) (custom)	3-wire			●	●				
F2YH*	F2YV*	Proximity		●	2-color LED	2-wire			●	●				
F3YH*	F3YV*	Proximity		●	2-color LED	3-wire			●	●				
T0H*	T0V*	Reed	●	●	1-color LED	2-wire	●	●	●	●	●	●	●	●
T5H*	T5V*	Reed	●	●	No indicator lamp	2-wire	●	●	●	●	●	●	●	●
T8H*	T8V*	Reed	●	●	1-color LED	2-wire						●	●	●
T1H*	T1V*	Proximity	●		1-color LED	2-wire			●	●	●	●	●	●
T2H*	T2V*	Proximity		●	1-color LED	2-wire	●	●	●	●	●	●	●	●
T3H*	T3V*	Proximity		●	1-color LED	3-wire	●	●	●	●	●	●	●	●
T3PH*	T3PV*	Proximity		●	1-color LED (PNP output)	3-wire	●	●	●	●	●	●	●	●
T2WH*	T2WV*	Proximity		●	2-color LED	2-wire	●	●	●	●	●	●	●	●
T2YH*	T2YV*	Proximity		●	2-color LED	2-wire			●	●	●	●	●	●
T3WH*	T3WV*	Proximity		●	2-color LED	3-wire	●	●	●	●	●	●	●	●
T3YH*	T3YV*	Proximity		●	2-color LED	3-wire			●	●	●	●	●	●
T2YD*	-	Proximity		●	2-color LED AC magnetic field	2-wire			●	●	●	●	●	●
T2YDT*	-	Proximity		●	2-color LED AC magnetic field	2-wire			●	●	●	●	●	●
T2JH*	T2JV*	Proximity		●	1-color LED off-delay	2-wire			●	●	●	●	●	●

*** Lead wire length**	
Blank	1 m (standard)
3	3 m (option)
5	5 m (option) *11
Ⓕ Switch quantity	
R	1 on rod side
H	1 on head side
D	2
Ⓖ Option	
Blank	Rod end female thread
N	Rod end male thread
M *4	Piston rod material (stainless steel) (made to order (ø32 to ø63))
Ⓗ Mounting bracket	
Blank	Without mounting bracket
LB	Axial foot
CB	Clevis bracket (pin and snap ring included)
FA	Rod side flange
FB	Head side flange
Ⓘ Accessory (available when rod end male thread "N" is selected)	
I	Rod eye
Y	Rod clevis (pin and snap ring included)

[Stroke table]

Stroke (mm)		Applicable bore size							
		12	16	20	25	32	40	50	63
Standard stroke	5	●	●	●	●	●	●		
	10	●	●	●	●	●	●	●	●
	15	●	●	●	●	●	●	●	●
	20	●	●	●	●	●	●	●	●
	25	●	●	●	●	●	●	●	●
	30	●	●	●	●	●	●	●	●
	35			●	●	●	●	●	●
	40			●	●	●	●	●	●
	45			●	●	●	●	●	●
	50			●	●	●	●	●	●
	75					●	●	●	●
	100					●	●	●	●
Min. stroke (mm) *1		1							
Max. stroke (mm)		30		50		100			
Custom stroke *2		In 1 mm increments							

1 : Less than 5 mm for 1-color LED switch and less than 10 mm for the 2-color LED, off-delay, AC magnetic field proof, T1 or T8* switch are not available. Refer to page 910 for the min. stroke with switch.
*2 : The total length when using a custom stroke is the same as that when using the next longer standard stroke.

How to order switch

SW - T0H

Switch model No.
(Item Ⓔ on page 912)

How to order mounting bracket

Bore size (mm) / Mounting bracket	ø12	ø16	ø20	ø25	ø32	ø40	ø50
Foot (LB)	SSD2-LB-12	SSD2-LB-16	SSD2-LB-20	SSD2-LB-25	SSD2-LB-32	SSD2-LB-40	SSD2-LB-50
Flange (FA/FB)	SSD2-FA-12	SSD2-FA-16	SSD2-FA-20	SSD2-FA-25	SSD2-FA-32	SSD2-FA-40	SSD2-FA-50
Clevis bracket (CB)	SSD2-CB-12	SSD2-CB-16	SSD2-CB-20	SSD2-CB-25	SSD2-CB-32	SSD2-CB-40	SSD2-CB-50

Bore size (mm) / Mounting bracket	ø63
Foot (LB)	SSD2-LB-63
Flange (FA/FB)	SSD2-FA-63
Clevis bracket (CB)	SSD2-CB-63

*1: The foot mounting bracket is provided as 2 pcs./set.

Internal structure and parts list (ø12 to ø25)

● SSD2-ML-12 to 25 (double acting/rotation-stop/with switch)

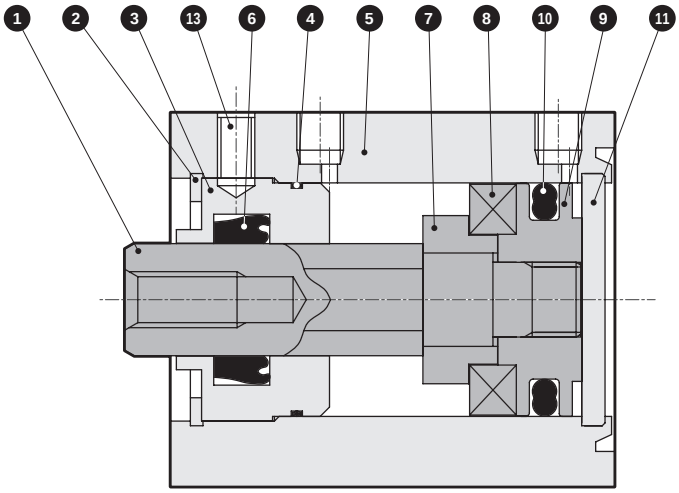

● SSD2-M-12 to 25 (double acting/rotation-stop)

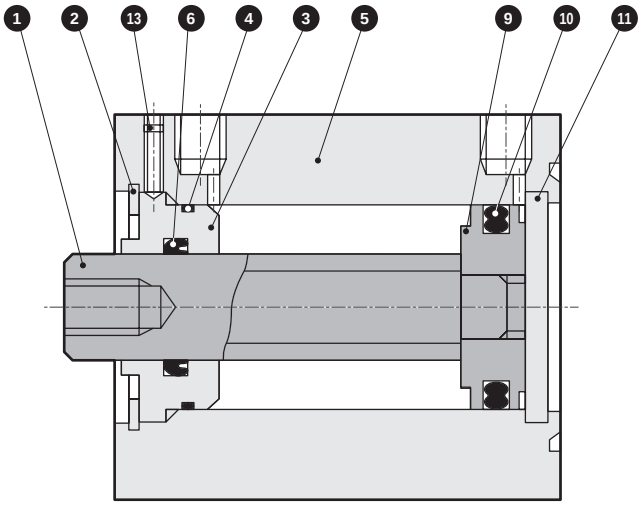

No.	Part name	Material	Remarks	No.	Part name	Material	Remarks
1	Piston rod	Stainless steel		8	Magnet	Plastic	
2	C-snap ring	Steel	Zinc phosphate	9	Piston	Aluminum alloy	Chromate
3	Rod metal	Special aluminum	Alumite	10	Piston packing	Nitrile rubber	
4	Rod metal gasket	Nitrile rubber		11	Cover	Stainless steel	
5	Body	Aluminum alloy	Hard alumite	13	Hexagon socket set screw	Steel	
6	Rod packing	Nitrile rubber					
7	Spacer	Aluminum alloy	Chromate				

Repair parts list

Bore size (mm)	Kit No.	Repair parts No.
ø12	SSD2-M-12K	4 6 10
ø16	SSD2-M-16K	
ø20	SSD2-M-20K	
ø25	SSD2-M-25K	

Internal structure and parts list (ø32 to ø63)

● SSD2-ML-32 to 63 (double acting/rotation-stop/with switch)

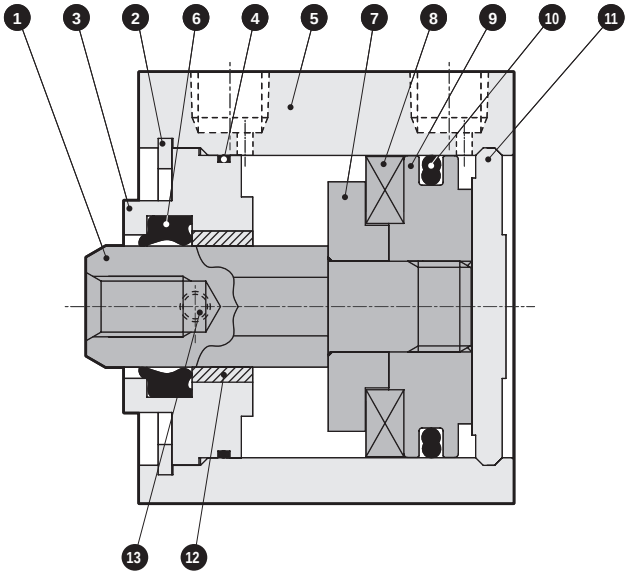

● SSD2-M-32 to 63 (double acting/rotation-stop)

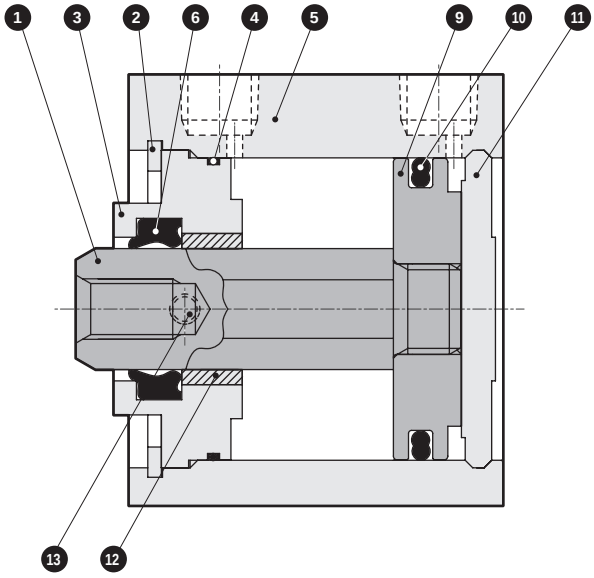

No.	Part name	Material	Remarks
1	Piston rod	Steel	Industrial chrome plating
2	C-snap ring	Steel	Zinc phosphate
3	Rod metal	ø32 to ø50: Special aluminum ø63: Aluminum alloy	Alumite
4	Rod metal gasket	Nitrile rubber	
5	Body	Aluminum alloy	Hard alumite
6	Rod packing	Nitrile rubber	
7	Spacer	Aluminum alloy	Chromate

No.	Part name	Material	Remarks
8	Magnet	Plastic	
9	Piston	Aluminum alloy	Chromate
10	Piston packing	Nitrile rubber	
11	Cover	Aluminum alloy	Alumite
12	Bush	Oil impregnated bearing alloy	
13	Hexagon socket set screw	Steel	

Repair parts list

Bore size (mm)	Kit No.	Repair parts No.
ø32	SSD2-M-32K	4 6 10
ø40	SSD2-M-40K	
ø50	SSD2-M-50K	
ø63	SSD2-M-63K	

SCP*3
CMK2
CMA2
SCM
SCG
SCA2
SCS2
CKV2
CAV2/COVP/N2
SSD2
SSG
SSD
CAT
MDC2
MVC
SMG
MSD/MSDG
FC*
STK
SRL3
SRG3
SRM3
SRT3
MRL2
MRG2
SM-25
ShkAbs
FJ
FK
Spd Contr
Ending

Dimensions

● SSD2-ML-12 to 25 (with switch)

ø12/ø16

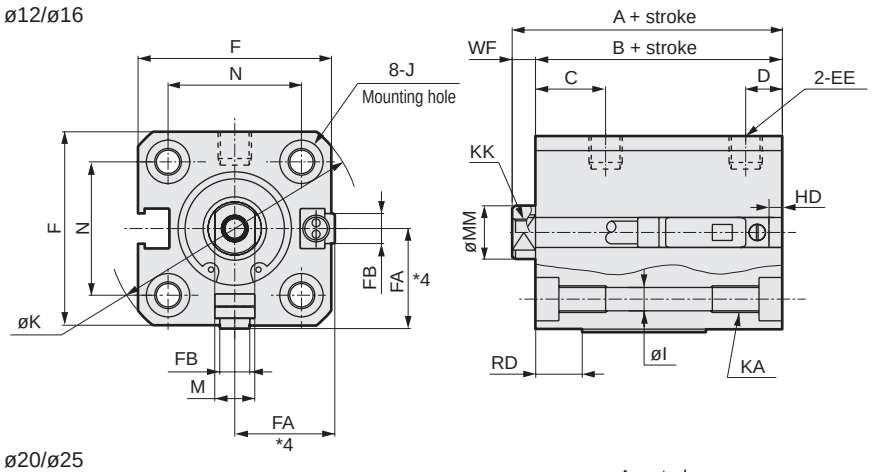

ø20/ø25

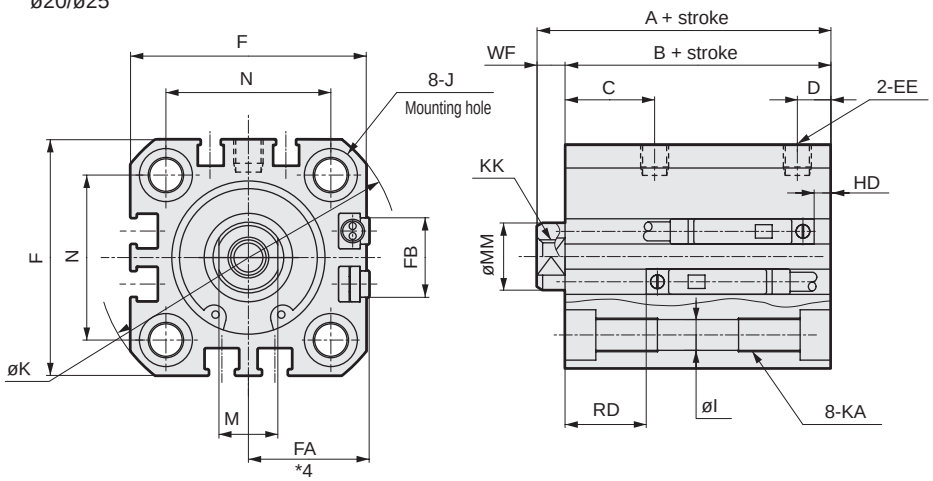

● Rod end male thread

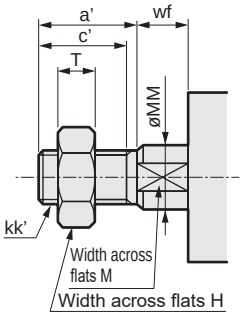

Code / Bore size (mm)	Common dimensions with switch																
	A *1	B *1	C	D	EE	F	FA *4	FB	I	J	K	KA	KK	M	MM	N	WF
ø12	30.5	27	10.5	5.5	M5	25	13(16.5)	4.5	3.5	6.5 spot face depth 3.5	32	M4 depth 7	M3 depth 6	5	6	15.5	3.5
ø16	30.5	27	10.5	5.5	M5	29	15(18.5)	4.5	3.5	6.5 spot face depth 3.5	38	M4 depth 7	M4 depth 8	6	8	20	3.5
ø20	39	34.5	13	5.5	M5	36	18.5(22)	12.5	5.5	9 spot face depth 5.5	47	M6 depth 11	M5 depth 7	8	10	25.5	4.5
ø25	42.5	37.5	16	6	M5	40	20.5(24)	13.5	5.5	9 spot face depth 5.5	51	M6 depth 11	M6 depth 12	10	12	28	5

Switch dimensions / Bore size (mm)	Reed T0H/T0V, T5H/T5V		Proximity T2H/T2V, T3H/T3V		Proximity T2WH/T2WV, T3WH/T3WV		Proximity F2H/F2V, F3H/F3V, F2YH/F2YV, F3YH/F3YV		Proximity F2S/F3S	
	HD	RD	HD	RD	HD	RD	HD	RD	HD	RD
ø12	0	7.5	0	7.5	2	9.5				
ø16	0	7	0	7	2.5	9.5				
ø20	3	11.5	3	11.5	5	13	7.5	15.5	6.5	14.5
ø25	3	14.5	3	14.5	6	16	8.5	18.5	7.5	17.5

*1 : To calculate A+ stroke or B+ stroke when using custom stroke, apply the next longer standard stroke (instead of the custom stroke) to the stroke value.
(Example) If the custom stroke is 7 mm, apply the standard stroke of 10 mm.
*2 : HD and RD dimensions for 5 mm stroke differ from these dimensions according to the setting.
3 : Refer to page 1044 for HD, RD and protruding dimensions of the 2-color LED, off-delay, AC magnetic field proof, T1 and T8* switches.
*4 : Dimensions in ( ) of FA are for the L-shaped lead wire.
*5 : For dimensions of individual accessories, refer to pages 1046 to 1049.
*6 : Only F-switch is available for the ø20 or ø25 piping port surface.

● Dimensions of rod end male thread part

Code / Bore size (mm)	a'	c'	H	kk'	M	MM	T	wf
ø12	10.5	9	8	M5	5	6	3.2	3.5
ø16	12	10	10	M6	6	8	3.6	3.5
ø20	14	12	13	M8	8	10	5	4.5
ø25	17.5	15	17	M10x1.25	10	12	6	5

Dimensions with mounting bracket

CAD

● Axial foot (LB) with switch
SSD2-ML-12 to 25 -LB

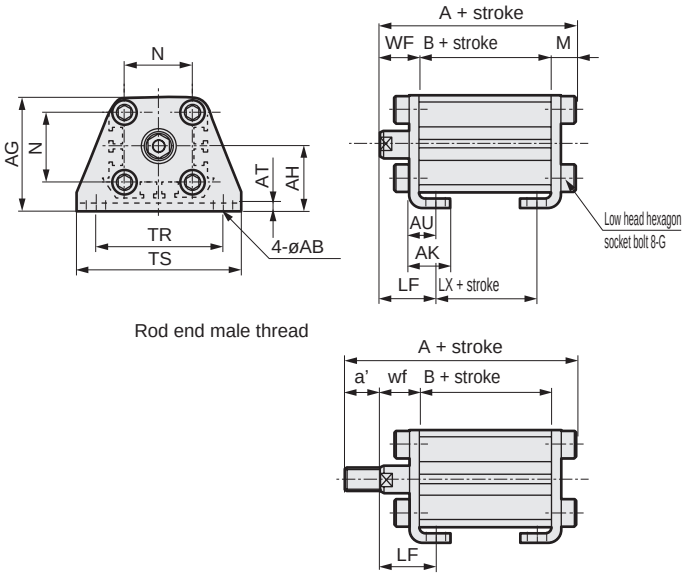

● Clevis bracket (CB) with switch
SSD2-MY-12 to 25 -CB

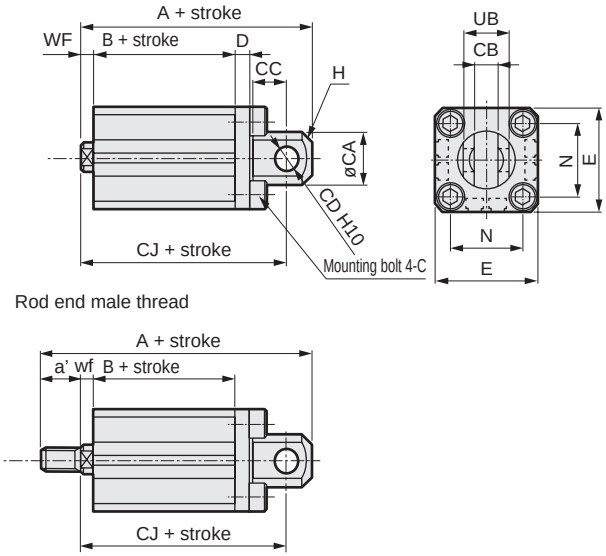

Code	Common dimensions						Female thread				
Bore size (mm)	AB	AG	AH	AK	AT	AU	G	N	TR	TS	M
ø12	5	29.5	17	12.5	2	8	M4x10	15.5	34	44	4.8
ø16	5	33.5	19	13	2	8	M4x10	20	38	48	4.8
ø20	7	42	24	15	3.2	9.2	M6x16	25.5	48	62	7.2
ø25	7	46	26	16.5	3.2	10.7	M6x16	28	52	66	7.2

Code						Male thread					
Bore size (mm)	WF	LF	A	B	LX	a'	WF	LF	A	B	LX
ø12	13.5	19.5	45.3	27	15	10.5	13.5	19.5	55.8	27	15
ø16	13.5	19.5	45.3	27	15	12	13.5	19.5	57.3	27	15
ø20	14.5	20.5	56.2	34.5	22.5	14	14.5	20.5	70.2	34.5	22.5
ø25	15	22.5	59.7	37.5	22.5	17.5	15	22.5	77.2	37.5	22.5

Code	Common dimensions									
Bore size (mm)	CA	CB	CC	CD	D	E	G	H	N	UB
ø12	12	$5.2^{+0.2}_{0}$	7	5	4	25	M4x12	C1.5	15.5	$10^{-0.1}_{-0.3}$
ø16	15	$6.6^{+0.3}_{0}$	8	5	5	29	M4x12	C2	20	$12^{-0.1}_{-0.4}$
ø20	20	$8.2^{+0.2}_{0}$	12	8	5	36	M6x16	C4	25.5	$16^{-0.1}_{-0.3}$
ø25	24	$10.2^{+0.2}_{0}$	14	10	5	40	M6x16	C5	28	$20^{-0.1}_{-0.3}$

Code	Female thread				Male thread				
Bore size (mm)	WF	A	B	CJ	a'	wf	A	B	CJ
ø12	3.5	50.5	27	44.5	10.5	8.5	61	27	44.5
ø16	3.5	51.5	27	45.5	12	8.5	63.5	27	45.5
ø20	4.5	66	34.5	57	14	9.5	80	34.5	57
ø25	5	72.5	37.5	62.5	17.5	10	90	37.5	62.5

● Rod side flange (FA) with switch
SSD2-ML-12 to 25 -FA

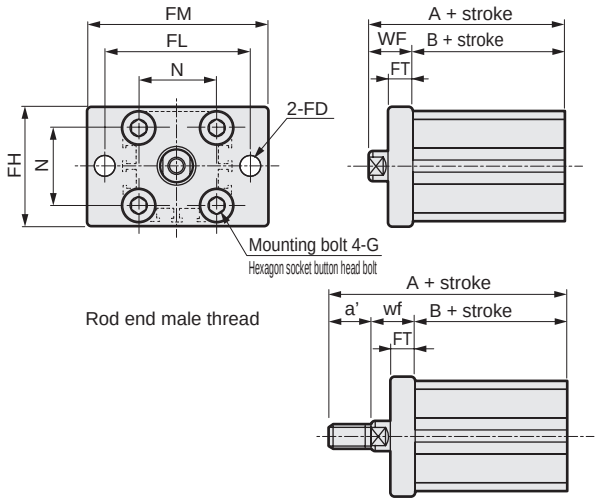

● Head side flange (FB) with switch
SSD2-ML-12 to 25 -FB

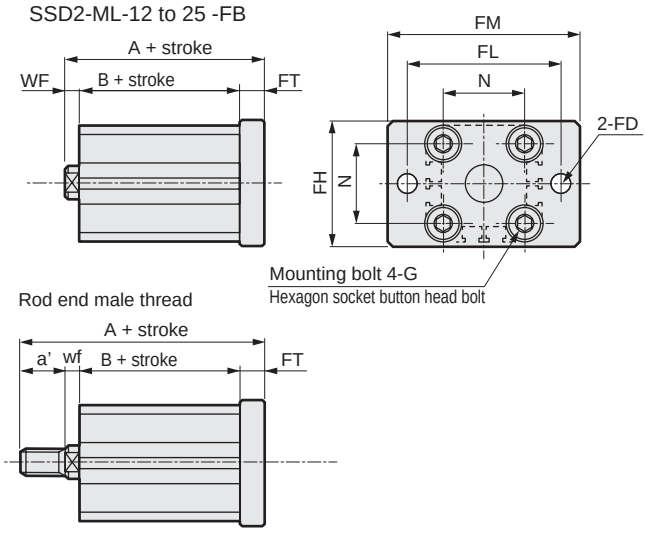

Code	Common dimensions						
Bore size (mm)	FD	FH	FL	FM	FT	N	G
ø12	4.5	25	45	55	5.5	15.5	M4x12
ø16	4.5	30	45	55	5.5	20	M4x12
ø20	6.6	39	48	60	8	25.5	M6x16
ø25	6.6	42	52	64	8	28	M6x16

Code	Female thread			Male thread			
Bore size (mm)	WF	A	B	a'	wf	A	B
ø12	13.5	40.5	27	10.5	13.5	51	27
ø16	13.5	40.5	27	12	13.5	52.5	27
ø20	14.5	49	34.5	14	14.5	63	34.5
ø25	15	52.5	37.5	17.5	15	70	37.5

Code	Common dimensions						
Bore size (mm)	FD	FH	FL	FM	FT	N	G
ø12	4.5	25	45	55	5.5	15.5	M4x12
ø16	4.5	30	45	55	5.5	20	M4x12
ø20	6.6	39	48	60	8	25.5	M6x16
ø25	6.6	42	52	64	8	28	M6x16

Code	Female thread			Male thread			
Bore size (mm)	WF	A	B	a'	wf	A	B
ø12	3.5	36	27	10.5	8.5	46.5	27
ø16	3.5	36	27	12	8.5	48	27
ø20	4.5	47	34.5	14	9.5	61	34.5
ø25	5	50.5	37.5	17.5	10	68	37.5

SCP*3
CMK2
CMA2
SCM
SCG
SCA2
SCS2
CKV2
CAV2/COVP/N2
SSD2
SSG
SSD
CAT
MDC2
MVC
SMG
MSD/MSDG
FC*
STK
SRL3
SRG3
SRM3
SRT3
MRL2
MRG2
SM-25
ShkAbs
FJ
FK
Spd Contr
Ending

Dimensions

● SSD2-M-12 to 25 (without switch)

ø12/ø16

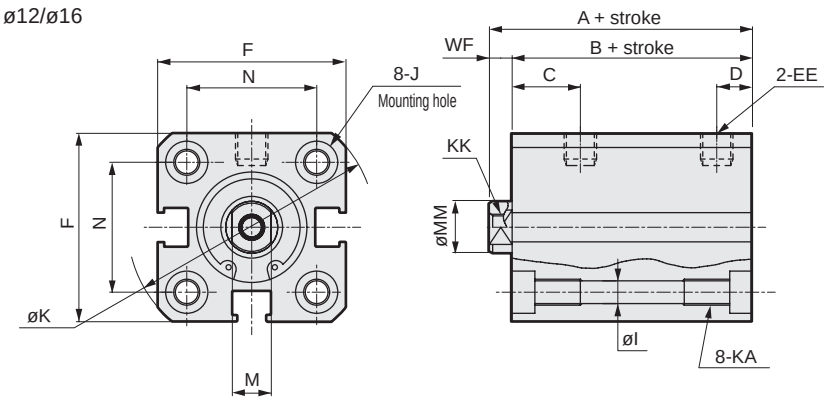

ø20/ø25

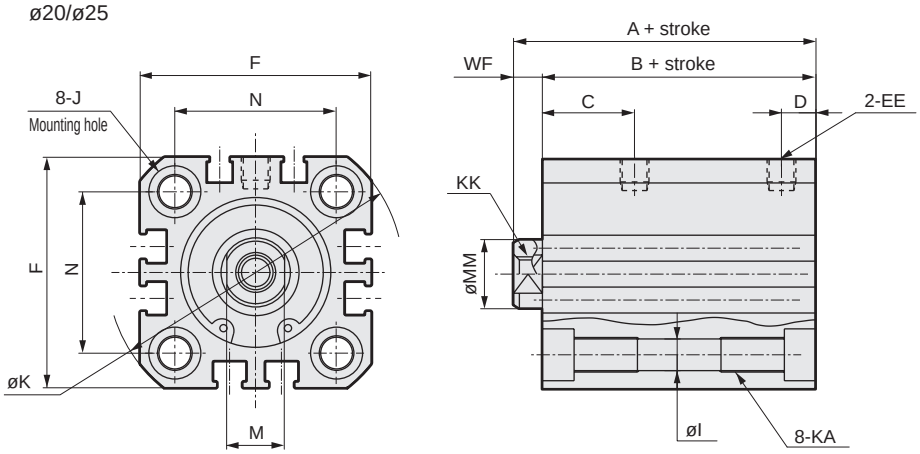

● Rod end male thread

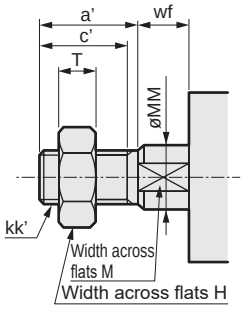

Code / Bore size (mm)	No switch														
	A *1	B *1	C	D	EE	F	I	J	K	KA	KK	M	MM	N	WF
ø12	25.5	22	10.5	5.5	M5	25	3.5	6.5 spot face depth 3.5	32	M4 depth 7	M3 depth 6	5	6	15.5	3.5
ø16	25.5	22	10.5	5.5	M5	29	3.5	6.5 spot face depth 3.5	38	M4 depth 7	M4 depth 8	6	8	20	3.5
ø20	29	24.5	13	5.5	M5	36	5.5	9 spot face depth 5.5	47	M6 depth 11	M5 depth 7	8	10	25.5	4.5
ø25	32.5	27.5	16	6	M5	40	5.5	9 spot face depth 5.5	51	M6 depth 11	M6 depth 12	10	12	28	5

*1 : To calculate A+ stroke or B+ stroke when using custom stroke, apply the next longer standard stroke (instead of the custom stroke) to the stroke value.
(Example) If the custom stroke is 7 mm, apply the standard stroke of 10 mm.

*2 : For dimensions of individual accessories, refer to pages 1046 to 1049.

● Dimensions of rod end male thread part

Code / Bore size (mm)	a'	c'	H	kk'	M	MM	T	wf
ø12	10.5	9	8	M5	5	6	3.2	3.5
ø16	12	10	10	M6	6	8	3.6	3.5
ø20	14	12	13	M8	8	10	5	4.5
ø25	17.5	15	17	M10x1.25	10	12	6	5

Dimensions with mounting bracket

CAD

● Axial foot (LB) without switch
SSD2-M-12 to 25 -LB

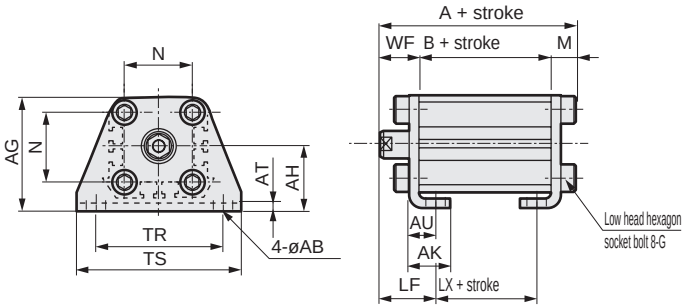

Rod end male thread

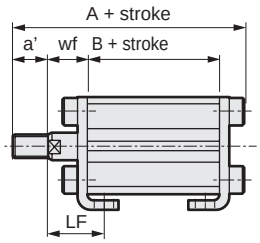

● Clevis bracket (CB) without switch
SSD2-M-12 to 25 -CB

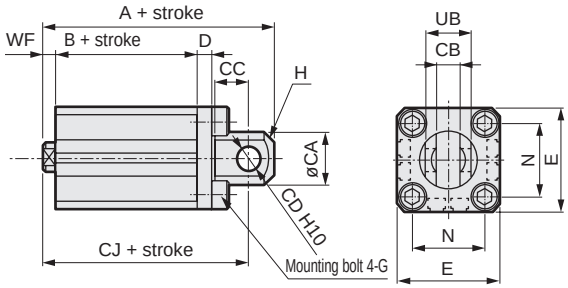

Rod end male thread

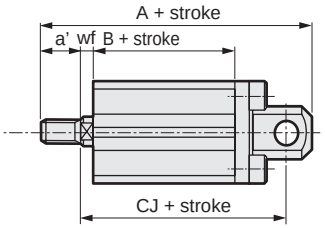

Code	Common dimensions						Female thread				
Bore size (mm)	AB	AG	AH	AK	AT	AU	G	N	TR	TS	M
ø12	5	29.5	17	12.5	2	8	M4x10	15.5	34	44	4.8
ø16	5	33.5	19	13	2	8	M4x10	20	38	48	4.8
ø20	7	42	24	15	3.2	9.2	M6x16	25.5	48	62	7.2
ø25	7	46	26	16.5	3.2	10.7	M6x16	28	52	66	7.2

Code						Male thread					
Bore size (mm)	WF	LF	A	B	LX	a'	WF	LF	A	B	LX
ø12	13.5	19.5	40.3	22	10	10.5	13.5	19.5	50.8	22	10
ø16	13.5	19.5	40.3	22	10	12	13.5	19.5	52.3	22	10
ø20	14.5	20.5	46.2	24.5	12.5	14	14.5	20.5	60.2	24.5	12.5
ø25	15	22.5	49.7	27.5	12.5	17.5	15	22.5	67.2	27.5	12.5

Code	Common dimensions									
Bore size (mm)	CA	CB	CC	CD	D	E	G	H	N	UB
ø12	12	$5.2^{+0.2}_{0}$	7	5	4	25	M4x12	C1.5	15.5	$10^{-0.1}_{-0.3}$
ø16	15	$6.6^{+0.3}_{0}$	8	5	5	29	M4x12	C2	20	$12^{-0.1}_{-0.4}$
ø20	20	$8.2^{+0.2}_{0}$	12	8	5	36	M6x16	C4	25.5	$16^{-0.1}_{-0.3}$
ø25	24	$10.2^{+0.2}_{0}$	14	10	5	40	M6x16	C5	28	$20^{-0.1}_{-0.3}$

Code	Female thread				Male thread				
Bore size (mm)	WF	A	B	CJ	a'	wf	A	B	CJ
ø12	3.5	45.5	22	39.5	10.5	8.5	56	22	39.5
ø16	3.5	46.5	22	40.5	12	8.5	58.5	22	40.5
ø20	4.5	56	24.5	47	14	9.5	70	24.5	47
ø25	5	62.5	27.5	52.5	17.5	10	80	27.5	52.5

● Rod side flange (FA) without switch
SSD2-M-12 to 25 -FA

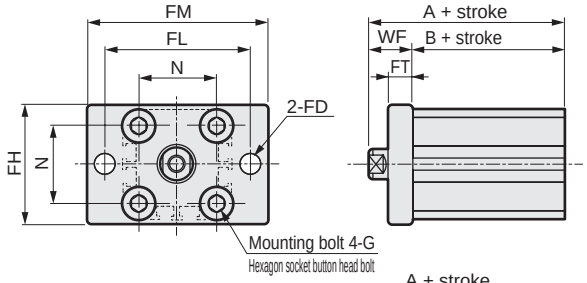

Rod end male thread

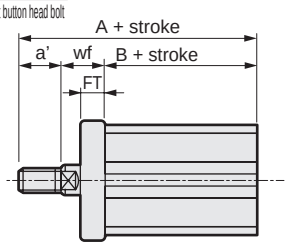

● Head side flange (FB) without switch
SSD2-M-12 to 25 -FB

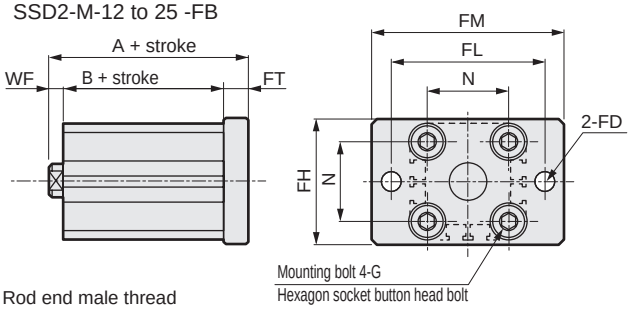

Rod end male thread

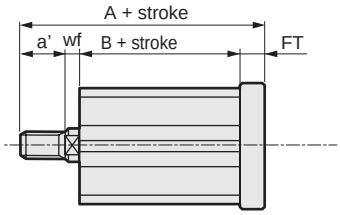

Code	Common dimensions						
Bore size (mm)	FD	FH	FL	FM	FT	N	G
ø12	4.5	25	45	55	5.5	15.5	M4x12
ø16	4.5	30	45	55	5.5	20	M4x12
ø20	6.6	39	48	60	8	25.5	M6x16
ø25	6.6	42	52	64	8	28	M6x16

Code	Female thread			Male thread			
Bore size (mm)	WF	A	B	a'	wf	A	B
ø12	13.5	35.5	22	10.5	13.5	46	22
ø16	13.5	35.5	22	12	13.5	47.5	22
ø20	14.5	39	24.5	14	14.5	53	24.5
ø25	15	42.5	27.5	17.5	15	60	27.5

Code	Common dimensions						
Bore size (mm)	FD	FH	FL	FM	FT	N	G
ø12	4.5	25	45	55	5.5	15.5	M4x12
ø16	4.5	30	45	55	5.5	20	M4x12
ø20	6.6	39	48	60	8	25.5	M6x16
ø25	6.6	42	52	64	8	28	M6x16

Code	Female thread			Male thread			
Bore size (mm)	WF	A	B	a'	wf	A	B
ø12	3.5	31	22	10.5	8.5	41.5	22
ø16	3.5	31	22	12	8.5	43	22
ø20	4.5	37	24.5	14	9.5	51	24.5
ø25	5	40.5	27.5	17.5	10	58	27.5

SCP*3
CMK2
CMA2
SCM
SCG
SCA2
SCS2
CKV2
CAV2/COVP/N2
SSD2
SSG
SSD
CAT
MDC2
MVC
SMG
MSD/MSDG
FC*
STK
SRL3
SRG3
SRM3
SRT3
MRL2
MRG2
SM-25
ShkAbs
FJ
FK
Spd Contr
Ending

Dimensions

● SSD2-ML-32 to 63 (with switch)

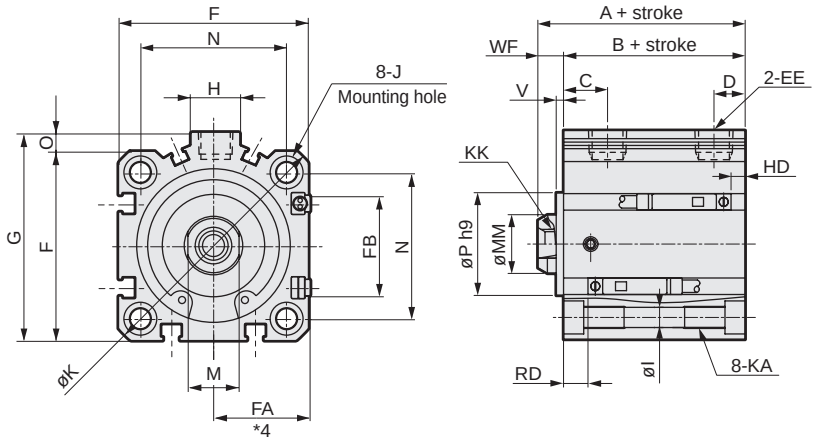

● Rod end male thread

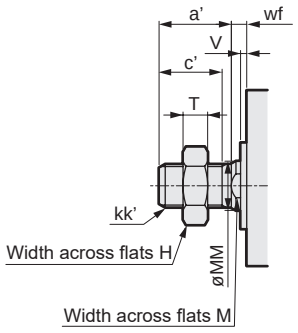

● SSD2-M-32 to 63 (without switch)

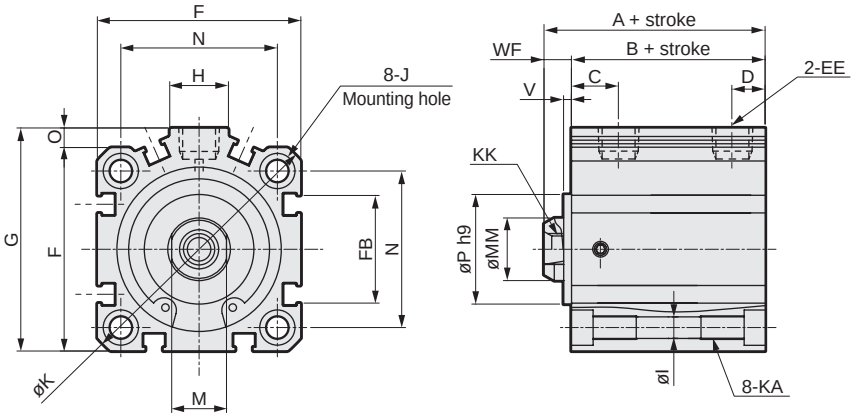

Code / Bore size (mm)	No switch A *1/*6	No switch B *1/*6	Common dimensions with switch A *1	B *1	C *8	D *8	EE	F	FA *4	FB	G	H	I	J	K	KA
ø32	39(49)	32(42)	49	42	18(20)	8(5.5)	Rc1/8 *7	45	23(26.5)	20.5	49.5	12.5	5.5	9 spot face depth 5.5	60	M6 depth 11
ø40	36.5(46.5)	29.5(39.5)	46.5	39.5	12(11.5)	8.5(8)	Rc1/8	52	26.5(30)	27.5	57	15	5.5	9 spot face depth 5.5	69	M6 depth 11
ø50	38.5(48.5)	30.5(40.5)	48.5	40.5	10.5	10.5	Rc1/4	64	32.5(36)	28.5	71	18	6.9	11 spot face depth 6.5	86	M8 depth 13
ø63	44(54)	36(46)	54	46	13	11	Rc1/4	77	39(42.5)	28.5	84	23	8.7	14 spot face depth 9	103	M10 depth 25

Code / Bore size (mm)	Common dimensions with switch KK	M	MM	N	O	P	V	WF	Reed T0H/T0V, T5H/T5V HD *2	Reed T0H/T0V, T5H/T5V RD *2	Proximity T2H/T2V, T3H/T3V HD *2	Proximity T2H/T2V, T3H/T3V RD *2	Proximity T2WH/T2WV, T3WH/T3WV HD	Proximity T2WH/T2WV, T3WH/T3WV RD
ø32	M8 depth 13	14	16	34	4.5	21	2	7	4.5	19	4.5	19	5	20.5
ø40	M8 depth 13	14	16	40	5	28	2	7	7	12	7	12	8.5	13.5
ø50	M10 depth 15	18	20	50	7	35	2	8	7.5	12.5	7.5	12.5	9	14
ø63	M10 depth 15	18	20	60	7	35	2	8	12.5	13	12.5	13	14	14.5

*1 : To calculate A+ stroke or B+ stroke when using custom stroke, apply the next longer standard stroke (instead of the custom stroke) to the stroke value. (Example) If the custom stroke is 7 mm, apply the standard stroke of 10 mm.
*2 : HD and RD dimensions for 5 mm stroke differ from these dimensions according to the setting.
3 : Refer to page 1044 for HD, RD and protruding dimensions of the 2-color LED, off-delay, AC magnetic field proof, T1 and T8* switches.
*4 : Dimensions in ( ) of FA are for the L-shaped lead wire.
*5 : For dimensions of individual accessories, refer to pages 1046 to 1049.
*6 : Dimensions in ( ) of codes A and B are for strokes of more than 50 mm.
*7 : The ø32 bore size with a 5 mm stroke and without a switch has a port size of M5.*8 : Dimensions in ( ) of codes C and D are when the value is for a 5 mm stroke without switch.

● Rod end male thread

Code / Bore size (mm)	a'	c'	H	kk'	M	MM	T	wf
ø32	23.5	20.5	22	M14x1.5	14	16	8	5
ø40	23.5	20.5	22	M14x1.5	14	16	8	5
ø50	28.5	26	27	M18x1.5	18	20	11	5
ø63	28.5	26	27	M18x1.5	18	20	11	5

Dimensions with mounting bracket

CAD

● Axial foot (LB)
SSD2-M(L)-32 to 63 -LB

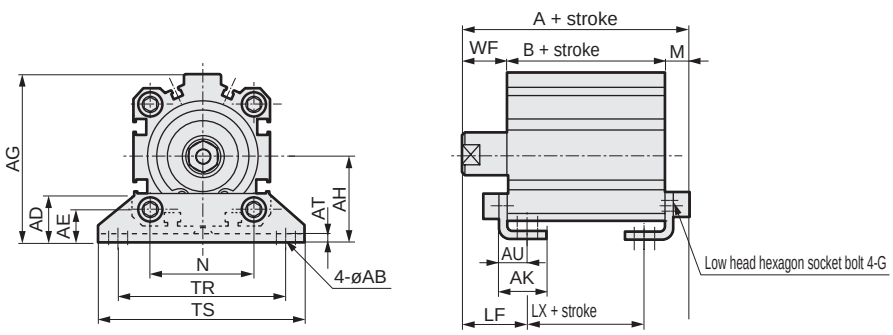

Code / Bore size (mm)	Common dimensions						Female thread									No switch		
	AB	AD	AE	AG	AH	AK	AT	AU	G	N	TR	TS	M	WF	LF	A	B	LX
ø32	7	18.5	13	57	30	17	3.2	11.2	M6x16	34	57	71	7.2	17	25	56.2(66.2)	32(42)	16(26)
ø40	7	18	13	64	33	18.2	3.2	11.2	M6x16	40	64	78	7.2	17	25	53.7(63.7)	29.5(39.5)	13.5(23.5)
ø50	9	22	14	78	39	22.7	3.2	14.7	M8x20	50	79	95	8.2	18	29.5	56.7(66.7)	30.5(40.5)	7.5(17.5)
ø63	11	26	16	91.5	46	25.2	3.2	16.2	M10x25	60	95	113	9.2	18	31	63.2(73.2)	36(46)	10(20)

Code / Bore size (mm)	Female thread			Male thread								
	With switch			a'	WF	LF	No switch			With switch		
	A	B	LX				A	B	LX	A	B	LX
ø32	66.2	42	26	23.5	15	23	77.7(87.7)	32(42)	16(26)	87.7	42	26
ø40	63.7	39.5	23.5	23.5	15	23	75.2(85.2)	29.5(39.5)	13.5(23.5)	85.2	39.5	23.5
ø50	66.7	40.5	17.5	28.5	15	26.5	82.2(92.2)	30.5(40.5)	7.5(17.5)	92.2	40.5	17.5
ø63	73.2	46	20	28.5	15	28	88.7(98.7)	36(46)	10(20)	98.7	46	20

* Dimensions in ( ) are for strokes of more than 50 mm.
* A pin and a snap ring are included.

● Clevis bracket (CB)
SSD2-M(L)-32 to 63 -CB

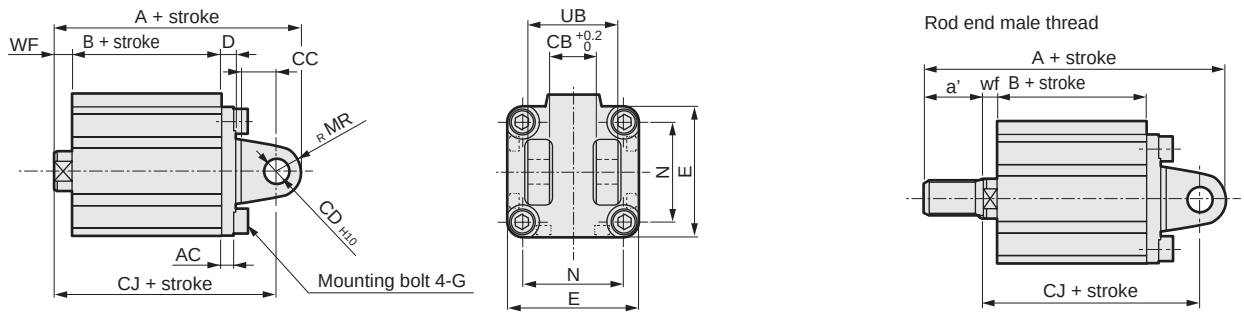

Code / Bore size (mm)	Common dimensions										Female thread							Male thread							
	AC	CB	CC	CD	D	E	G	MR	N	UB	WF	No switch			With switch			a'	wf	No switch			With switch		
												A	B	CJ	A	B	CJ			A	B	CJ	A	B	CJ
ø32	4.5	18.2	14	10	5	45	M6x16	10	34	36	7	69	32	59	79	42	69	23.5	14	90.5	32	57	100.5	42	67
ø40	5	18.2	14	10	6	52	M6x16	10	40	36	7	68.5	29.5	58.5	78.5	39.5	68.5	23.5	5	90	29.5	56.5	100	39.5	66.5
ø50	6	22.2	20	14	7	64	M8x20	14	50	44	8	80.5	30.5	66.5	90.5	40.5	76.5	28.5	5	106	30.5	63.5	116	40.5	73.5
ø63	7	22.2	20	14	8	77	M10x25	14	60	44	8	88	36	74	98	46	84	28.5	5	113.5	36	71	123.5	46	81

SCP*3
CMK2
CMA2
SCM
SCG
SCA2
SCS2
CKV2
CAV2/COVP/N2
SSD2
SSG
SSD
CAT
MDC2
MVC
SMG
MSD/MSDG
FC*
STK
SRL3
SRG3
SRM3
SRT3
MRL2
MRG2
SM-25
ShkAbs
FJ
FK
Spd Contr
Ending

Dimensions with mounting bracket

CAD

● Rod side flange (FA)
SSD2-M(L)-32 to 63 -FA

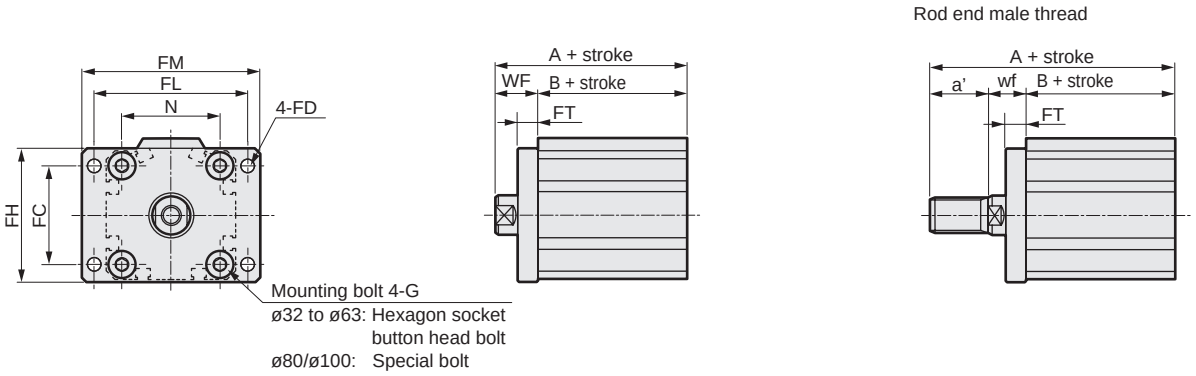

Code / Bore size (mm)	Common dimensions								Female thread				
	FC	FD	FH	FL	FM	FT	N	G	WF	No switch		With switch	
										A	B	A	B
ø32	34	5.5	48	56	65	8	34	M6x16	17	49(59)	32(42)	59	42
ø40	40	5.5	54	62	72	8	40	M6x16	17	46.5(56.5)	29.5(39.5)	56.5	39.5
ø50	50	6.6	67	76	89	9	50	M8x20	18	48.5(58.5)	30.5(40.5)	58.5	40.5
ø63	60	9	80	92	108	9	60	M10x25	18	54(64)	36(46)	64	46

Code / Bore size (mm)	Male thread					
	a'	wf	No switch		With switch	
			A	B	A	B
ø32	23.5	15	70.5(80.5)	32(42)	80.5	42
ø40	23.5	15	68(78)	29.5(39.5)	78	39.5
ø50	28.5	15	74(84)	30.5(40.5)	84	40.5
ø63	28.5	15	79.5(89.5)	36(46)	89.5	46

* Dimensions in ( ) are for strokes of more than 50 mm.

● Head side flange (FB)
SSD2-M(L)-32 to 63 -FB

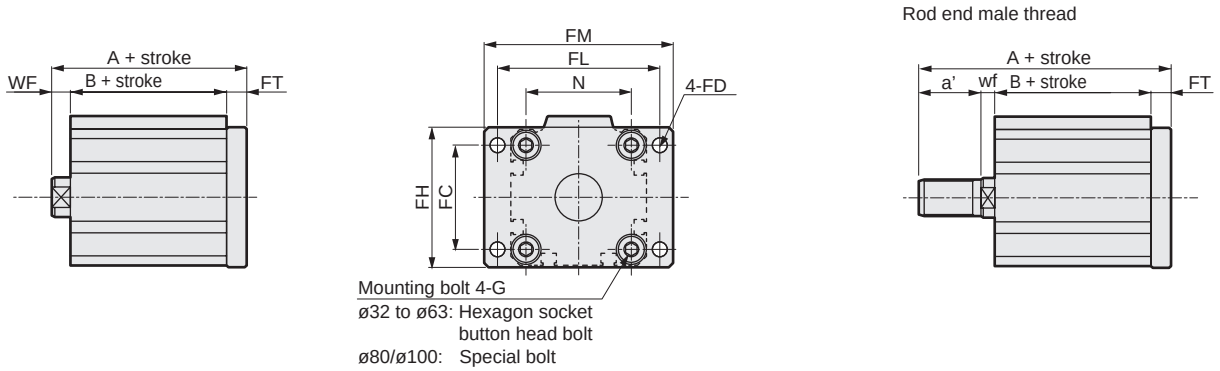

Code / Bore size (mm)	Common dimensions								Female thread					Male thread					
	FC	FD	FH	FL	FM	FT	N	G	WF	No switch		With switch		a'	wf	No switch		With switch	
										A	B	A	B			A	B	A	B
ø32	34	5.5	48	56	65	8	34	M6x16	7	47	32	57	42	23.5	14	68.5	32	78.5	42
ø40	40	5.5	54	62	72	8	40	M6x16	7	44.5	29.5	54.5	39.5	23.5	5	66	29.5	76	39.5
ø50	50	6.6	67	76	89	9	50	M8x20	8	47.5	30.5	57.5	40.5	28.5	5	73	30.5	83	40.5
ø63	60	9	80	92	108	9	60	M10x25	8	53	36	63	46	28.5	5	78.5	36	88.5	46

MEMO

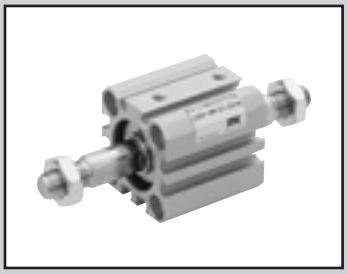

Compact cylinder double acting/double rod/rotation-stop

SSD2-DM Series

● Bore size: ø12/ø16/ø20/ø25
ø32/ø40/ø50/ø63

JIS symbol

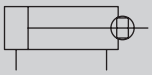

RoHS

Specifications

1 MPa = 10 bar

Item	SSD2-DM SSD2-DML (with switch)							
Bore size mm	ø12	ø16	ø20	ø25	ø32	ø40	ø50	ø63
Actuation	Double acting							
Working fluid	Compressed air							
Max. working pressure MPa	1.0 (≈150 psi, 10 bar)							
Min. working pressure MPa	0.15 (≈22 psi, 1.5 bar)							0.1 (≈15 psi)
Proof pressure MPa	1.6 (≈230 psi, 16 bar)							
Ambient temperature °C	-10 (14°F) to 60 (140°F) (no freezing)							
Port size	M5				Rc1/8 *1		Rc1/4	
Stroke tolerance mm	+1.0 0							
Working piston speed mm/s	50 to 500							50 to 300
Cushion	None							
Lubrication	Not required (use turbine oil class 1 ISO VG32 if necessary for lubrication)							
Non-rotating accuracy (*2)	±1°		±0.7°		±0.8°			
Allowable absorbed energy J	0.004	0.01	0.016	0.021	0.025	0.092	0.1	0.12

*1: The ø32 bore size with a 5 mm stroke and without a switch has a port size of M5.*2: Initial value at the pull end.

Stroke

Bore size (mm)	Standard stroke (mm)	Max. stroke (mm)	Min. stroke (mm)
ø12	5/10/15/20 25/30	30	5
ø16			
ø20	5/10/15/20/25 30/35/40/45/50	50	
ø25			
ø32	5/10/15/20/25/30/ 35/40/45/50/75/100	100	
ø40			
ø50	10/15/20/25/30 35/40/45/50/75/100		10
ø63			

*1: When using the type with switch, refer to the table of the min. stroke with switch.

Min. stroke with switch (2 switches)

Bore size (mm)	T0H/V / T5H/V	T2H/V / T3H/V
ø12	10(5)	5
ø16		
ø20	5	
ø25		
ø32		
ø40		
ø50	10	10
ø63		

1: Less than 10 mm with the 2-color LED, off-delay, AC magnetic field proof, T1 or T8* switch is not available.
*2: Values in ( ) are for the type with 1 on rod side.

Switch specifications (F-switch)

● 1-color/2-color LED

Item	2-wire proximity	3-wire proximity	2-wire proximity		3-wire proximity		
	F2S	F3S	F2H/F2V	F2YH/F2YV	F3H/F3V	F3PH/F3PV (made to order)	F3YH/F3YV
Applications	Dedicated for programmable controller	For programmable controller, relay	Dedicated for programmable controller		For programmable controller, relay		
Output method	-	NPN output	-		NPN output	PNP output	NPN output
Power supply voltage	-	10 to 28 VDC	-		10 to 28 VDC	4.5 to 28 VDC	10 to 28 VDC
Load voltage	10 to 30 VDC	30 VDC or less	10 to 30 VDC	24 VDC ±10%	30 VDC or less		
Load current	5 to 20 mA	50 mA or less	5 to 20 mA		50 mA or less		
Indicator	LED (Lit when ON)		Yellow LED (Lit when ON)	Red/green LED (Lit when ON)	Yellow LED (Lit when ON)		Red/green LED (Lit when ON)
Leakage current	1 mA or less	10 μA or less	1 mA or less		10 μA or less		
Weight g	1 m:10 3 m:29						

Switch specifications (T-switch)

● 1-color/2-color LED/for AC magnetic field proof

Item	2-wire proximity	2-wire proximity			3-wire proximity				2-wire reed							2-wire proximity
	T1H/T1V	T2H/T2V/T2JH/T2JV	T2YH/T2YV	T2WH/T2WV	T3H/T3V	T3PH/T3PV	T3YH/T3YV	T3WH/T3WV	T0H/T0V		T5H/T5V		T8H/T8V			T2YD(*4) T2YDT
Applications	For programmable controller, relay, compact solenoid valve	Dedicated for programmable controller			For programmable controller, relay				For programmable controller, relay		For programmable controller, relay, IC circuit (no indicator lamp), serial connection		For programmable controller, relay			Dedicated for programmable controller
Output method	-				NPN output	PNP output	NPN output	NPN output	-							
Pwr. supp. V.	-				10 to 28 VDC				-							
Load voltage	85 to 265 VAC	10 to 30 VDC		24 VDC ±10%	30 VDC or less				12/24 VDC	100/110 VAC	5/12/24 VDC	100/110 VAC	12/24 VDC	110 VAC	220 VAC	24 VDC ±10%
Load current	5 to 100 mA	5 to 20 mA (*3)			100 mA or less		50 mA or less		5 to 50 mA	7 to 20 mA	50 mA or less	20 mA or less	5 to 50 mA	7 to 20 mA	7 to 10 mA	5 to 20 mA
Indicator	LED (Lit when ON)	LED (Lit when ON)	Red/green LED (Lit when ON)	Red/green LED (Lit when ON)	LED (Lit when ON)	Yellow LED (Lit when ON)	Red/green LED (Lit when ON)	Red/green LED (Lit when ON)	LED (Lit when ON)		No indicator lamp		LED (Lit when ON)			Red/green LED (Lit when ON)
Leakage current	≤ 1 mA at 100 VAC, ≤ 2 mA at 200 VAC	1 mA or less			10 μA or less				0 mA							1 mA or less
Weight g	1 m:33 3 m:87 5 m:142	1 m:18 3 m:49 5 m:80	1 m:33 3 m:87 5 m:142	1 m:18 3 m:49 5 m:80	1 m:18 3 m:49 5 m:80		1 m:33 3 m:87 5 m:142	1 m:18 3 m:49 5 m:80	1 m:18 3 m:49 5 m:80				1 m:33 3 m:87 5 m:142			1 m:61 3 m:166 5 m:272

*1 : Refer to Ending Page 1 for detailed switch specifications and dimensions.
*2 : Switches other than the above models, such as switches with connectors, are also available. Refer to Ending Page 1.
*3 : The max. load current is 20 mA at 25°C. The current is lower than 20 mA if the operating ambient temperature around the switch is higher than 25˚C. (5 to 10 mA at 60°C)
*4 : Switch for AC magnetic field (T2YD/T2YDT) cannot be used in DC magnetic field.
*5 : The F-switch uses a bend-resistant lead wire.

Cylinder weight table (the weight of the switches is when there are 2 cylinder switches.)

(Unit: g)

Stroke (mm)	5		10		15		20		25		30		35		40		45		50		75		100	
Bore size (mm)	No switch	Switch	No switch	Switch	No switch	Switch	No switch	Switch	No switch	Switch	No switch	Switch	No switch	Switch	No switch	Switch	No switch	Switch	No switch	Switch	No switch	Switch	No switch	Switch
ø12	52	105	60	105	69	115	77	124	86	134	95	147	-	-	-	-	-	-	-	-	-	-	-	-
ø16	74	133	85	133	95	144	106	156	117	168	128	177	-	-	-	-	-	-	-	-	-	-	-	-
ø20	131	187	143	222	161	238	179	254	196	269	214	285	232	301	249	316	267	332	284	347	-	-	-	-
ø25	147	238	162	253	178	269	194	285	210	301	226	316	242	332	257	348	275	364	288	379	-	-	-	-
ø32	184	299	230	344	275	390	322	436	366	481	413	527	459	573	469	612	485	628	522	665	776	785	1004	1012
ø40	283	426	310	453	336	479	363	506	390	533	416	569	443	601	507	617	553	663	601	707	1317	1333	1475	1490
ø50	-	-	508	702	558	751	608	803	658	851	708	901	758	950	808	1001	835	1033	911	1105	2007	2025	2252	2270
ø63	-	-	902	1266	977	1341	1052	1416	1127	1491	1202	1566	1278	1642	1353	1717	1428	1792	1503	1867	2218	2242	2593	2617

Theoretical thrust table

(Unit: N)

Bore size (mm)	Operating direction	Working pressure MPa										
		0.1	0.15	0.2	0.3	0.4	0.5	0.6	0.7	0.8	0.9	1.0
ø12	Push/Pull	-	12.7	17.0	25.4	33.9	42.4	50.9	59.4	67.9	76.3	84.8
ø16	Push/Pull	-	22.6	30.2	45.2	60.3	75.4	90.5	1.06×10^2	1.21×10^2	1.36×10^2	1.51×10^2
ø20	Push/Pull	-	35.3	47.1	70.7	94.2	1.18×10^2	1.41×10^2	1.65×10^2	1.88×10^2	2.12×10^2	2.36×10^2
ø25	Push/Pull	-	56.7	75.6	1.13×10^2	1.51×10^2	1.89×10^2	2.27×10^2	2.64×10^2	3.02×10^2	3.40×10^2	3.78×10^2
ø32	Push/Pull	-	90.5	1.21×10^2	1.81×10^2	2.41×10^2	3.02×10^2	3.62×10^2	4.22×10^2	4.83×10^2	5.43×10^2	6.03×10^2
ø40	Push/Pull	-	1.58×10^2	2.11×10^2	3.17×10^2	4.22×10^2	5.28×10^2	6.33×10^2	7.39×10^2	8.44×10^2	9.50×10^2	1.06×10^3
ø50	Push/Pull	-	2.47×10^2	3.30×10^2	4.95×10^2	6.60×10^2	8.25×10^2	9.90×10^2	1.15×10^3	1.32×10^3	1.48×10^3	1.65×10^3
ø63	Push/Pull	2.80×10^2	4.20×10^2	5.61×10^2	8.41×10^2	1.12×10^3	1.40×10^3	1.68×10^3	1.96×10^3	2.24×10^3	2.52×10^3	2.80×10^3

How to order

No switch (without magnet for switch)

SSD2-DM - 12 ○ - 5 ———— N - LB - I

With switch (built-in magnet for switch)

SSD2-DML - 12 ○ - 5 - T0H - R - N - LB - I

- Ⓐ Model No.
- Ⓑ Bore size
- Ⓒ Port thread
- Ⓓ Stroke
- Ⓔ Switch model No. *1 *2 *3 *8 *9
- Ⓕ Switch quantity
- Ⓖ Option *4
- Ⓗ Mounting bracket *5 *6
- Ⓘ Accessory *7

⚠ Precautions for model No. selection

1 : The T2YD switch cannot be mounted on the ø12 and ø16 bore sizes.
2 : The T8 switch cannot be mounted on the ø12 to ø32 bore sizes.
*3 : The F-switch can only be mounted on the piping port surface of bore sizes ø20 and ø25.
*4 : Piston rod of ø12 to ø25 is stainless steel as standard. C-snap ring is stainless steel instead of steel. The rod end male thread nut is stainless steel.
*5 : The mounting bracket is included at shipment.
*6 : The projection dimension of piston rod WF when LB or FA is selected is different from that of the standard. Refer to the dimensions on pages 931, 933 and 935. The number of the specified protruding dimension will be added at the end of the model No. printed on the metal plate on the body.
*7 : "I" and "Y" cannot be selected together.
*8 : The F-switch with L type lead wire on ø20 models cannot be selected on strokes 10 mm or under.
*9 : Switches are shipped with the product. Contact CKD if assembling before shipment is necessary.
*10: Refer to pages 750 and 751 for combinations of variations/options.
*11 : F-switch cannot be selected.

[Example of model No.]

SSD2-DML-12-5-T0H-R-N-LB-I

Model: Compact cylinder rotation-stop

- Ⓑ Bore size : ø12 mm
- Ⓒ Port thread : Rc thread
- Ⓓ Stroke : 5 mm
- Ⓔ Switch model No. : Reed T0H switch
- Ⓕ Switch quantity : 1 on rod side
- Ⓖ Option : Rod end male thread
- Ⓗ Mounting bracket : Axial foot
- Ⓘ Accessory : Rod eye

Code	Description
Ⓐ Model No.	
SSD2-DM	Double acting/double rod/rotation-stop
SSD2-DML	Double acting/double rod/rotation-stop/with switch
Ⓑ Bore size (mm)	
12	ø12
16	ø16
20	ø20
25	ø25
32	ø32
40	ø40
50	ø50
63	ø63
Ⓒ Port thread	
Blank	Rc thread
NN	NPT thread (ø32 and over) (made-to-order product)
GN	G thread (ø32 and over) (made-to-order product)
Ⓓ Stroke (mm)	
Refer to the stroke table on the following page.	

Ⓔ Switch model No.

Lead wire Straight	Lead wire L-shaped	Contact	Voltage AC	Voltage DC	Indicator	Lead wire	Bore size 12	16	20	25	32	40	50	63
-	F2S*	Proximity		●	1-color LED	2-wire			●	●				
-	F3S*	Proximity		●	1-color LED	3-wire			●	●				
F2H*	F2V*	Proximity		●	1-color LED	2-wire			●	●				
F3H*	F3V*	Proximity		●	1-color LED	3-wire			●	●				
F3PH*	F3PV*	Proximity		●	1-color LED (PNP output) (custom)	3-wire			●	●				
F2YH*	F2YV*	Proximity		●	2-color LED	2-wire			●	●				
F3YH*	F3YV*	Proximity		●	2-color LED	3-wire			●	●				
T0H*	T0V*	Reed	●	●	1-color LED	2-wire	●	●	●	●	●	●	●	●
T5H*	T5V*	Reed	●	●	No indicator lamp	2-wire	●	●	●	●	●	●	●	●
T8H*	T8V*	Reed	●	●	1-color LED	2-wire						●	●	●
T1H*	T1V*	Proximity	●		1-color LED	2-wire			●	●	●	●	●	●
T2H*	T2V*	Proximity		●	1-color LED	2-wire	●	●	●	●	●	●	●	●
T3H*	T3V*	Proximity		●	1-color LED	3-wire	●	●	●	●	●	●	●	●
T3PH*	T3PV*	Proximity		●	1-color LED (PNP output)	3-wire	●	●	●	●	●	●	●	●
T2WH*	T2WV*	Proximity		●	2-color LED	2-wire	●	●	●	●	●	●	●	●
T2YH*	T2YV*	Proximity		●	2-color LED	2-wire			●	●	●	●	●	●
T3WH*	T3WV*	Proximity		●	2-color LED	3-wire	●	●	●	●	●	●	●	●
T3YH*	T3YV*	Proximity		●	2-color LED	3-wire			●	●	●	●	●	●
T2YD*	-	Proximity		●	2-color LED for AC magnetic field	2-wire			●	●	●	●	●	●
T2YDT*	-	Proximity		●	2-color LED for AC magnetic field	2-wire			●	●	●	●	●	●
T2JH*	T2JV*	Proximity		●	1-color LED off-delay	2-wire			●	●	●	●	●	●

* Lead wire length	
Blank	1 m (standard)
3	3 m (option)
5	5 m (option) *11
Ⓕ Switch quantity	
R	1 on rod side
H	1 on head side
D	2
Ⓖ Option	
Blank	Rod end female thread
N	Rod end male thread
M *4	Piston rod material (stainless steel) (made to order (ø32 to ø63))
Ⓗ Mounting bracket	
Blank	Without mounting bracket
LB	Axial foot
FA	Rod side flange
Ⓘ Accessory (available when rod end male thread "N" is selected)	
I	Rod eye
Y	Rod clevis (pin and snap ring included)

[Stroke table]

Stroke (mm)		Applicable bore size							
		12	16	20	25	32	40	50	63
Standard stroke	5	●	●	●	●	●	●		
	10	●	●	●	●	●	●	●	●
	15	●	●	●	●	●	●	●	●
	20	●	●	●	●	●	●	●	●
	25	●	●	●	●	●	●	●	●
	30	●	●	●	●	●	●	●	●
	35			●	●	●	●	●	●
	40			●	●	●	●	●	●
	45			●	●	●	●	●	●
	50			●	●	●	●	●	●
	75					●	●	●	●
	100					●	●	●	●
Min. stroke (mm) *1		5						10	
Max. stroke (mm)		30		50		100			
Custom stroke *2		-				By 5 mm increments			

1 : Less than 5 mm for 1-color LED switch and less than 10 mm for the 2-color LED, off-delay, AC magnetic field proof, T1 or T8* switch are not available.
Refer to page 924 for the min. stroke with switch.
*2 : Available only for more than 50 mm stroke.

How to order switch

SW - T0H

Switch model No.
(Item Ⓔ on page 926)

How to order mounting bracket

Bore size (mm) / Mounting bracket	ø12	ø16	ø20	ø25	ø32	ø40	ø50
Foot (LB)	SSD2-LB-12	SSD2-LB-16	SSD2-LB-20	SSD2-LB-25	SSD2-LB-32	SSD2-LB-40	SSD2-LB-50
Flange (FA)	SSD2-FA-12	SSD2-FA-16	SSD2-FA-20	SSD2-FA-25	SSD2-FA-32	SSD2-FA-40	SSD2-FA-50

Bore size (mm) / Mounting bracket	ø63
Foot (LB)	SSD2-LB-63
Flange (FA)	SSD2-FA-63

*1: The foot mounting bracket is provided as 2 pcs./set.

Internal structure and parts list (ø12 to ø25)

● SSD2-DML-12 to 25 (double acting/double rod/rotation-stop/with switch)

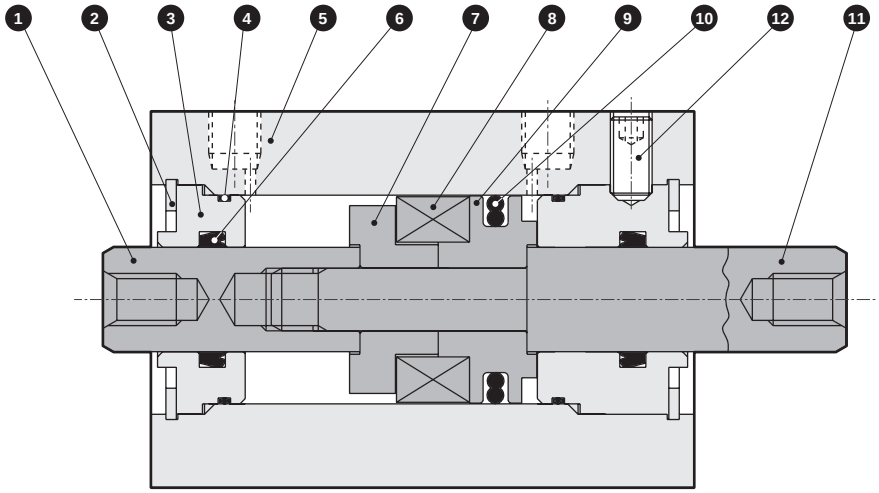

● SSD2-DM-12 to 25 (double acting/double rod/rotation-stop)

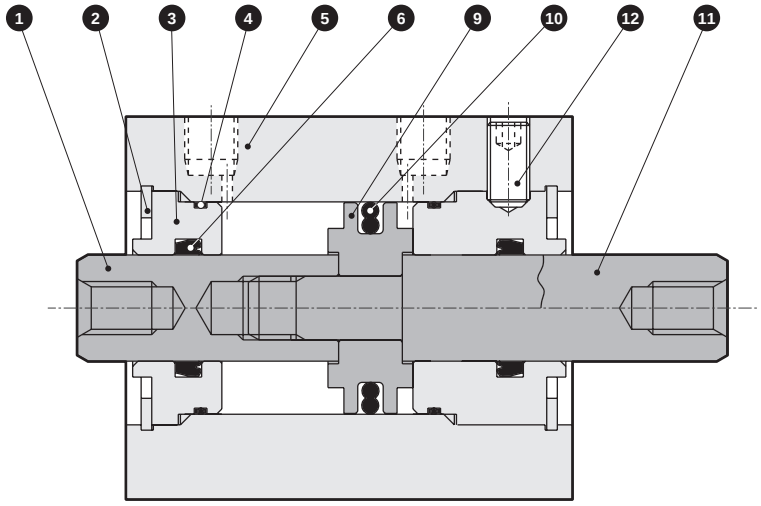

No.	Part name	Material	Remarks	No.	Part name	Material	Remarks
1	Piston rod A	Stainless steel	Industrial chrome plating	7	Spacer	Aluminum alloy	Chromate
2	C-snap ring	Steel	Zinc phosphate	8	Magnet	Plastic	
3	Rod metal	Special aluminum	Alumite	9	Piston	Aluminum alloy	Chromate
4	Rod metal gasket	Nitrile rubber		10	Piston packing	Nitrile rubber	
5	Body	Aluminum alloy	Hard alumite	11	Piston rod B	Stainless steel	Industrial chrome plating
6	Rod packing	Nitrile rubber		12	Hexagon socket set screw	Steel	

Repair parts list

Bore size (mm)	Kit No.	Repair parts No.
ø12	SSD2-DM-12K	4 6 10
ø16	SSD2-DM-16K	
ø20	SSD2-DM-20K	
ø25	SSD2-DM-25K	

Internal structure and parts list (ø32 to ø63)

● SSD2-DML-32 to 63 (double acting/double rod/rotation-stop/with switch)

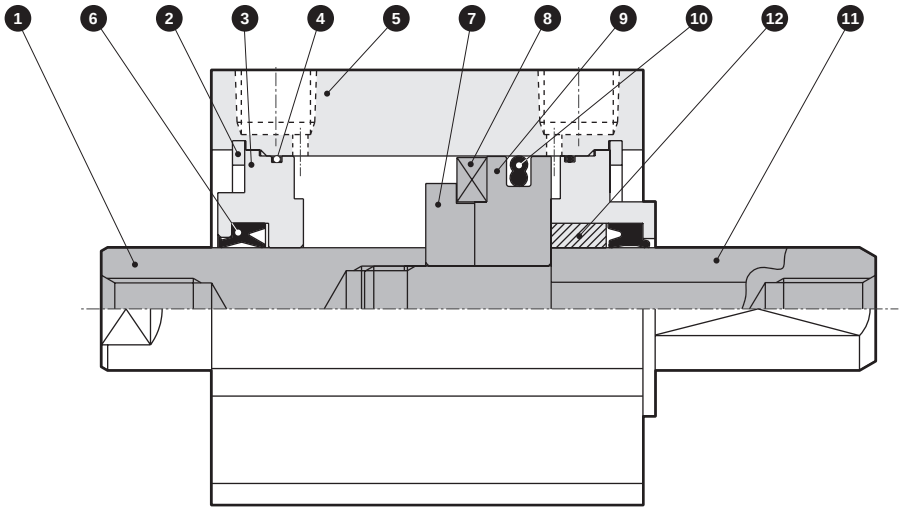

● SSD2-DM-32 to 63 (double acting/double rod/rotation-stop)

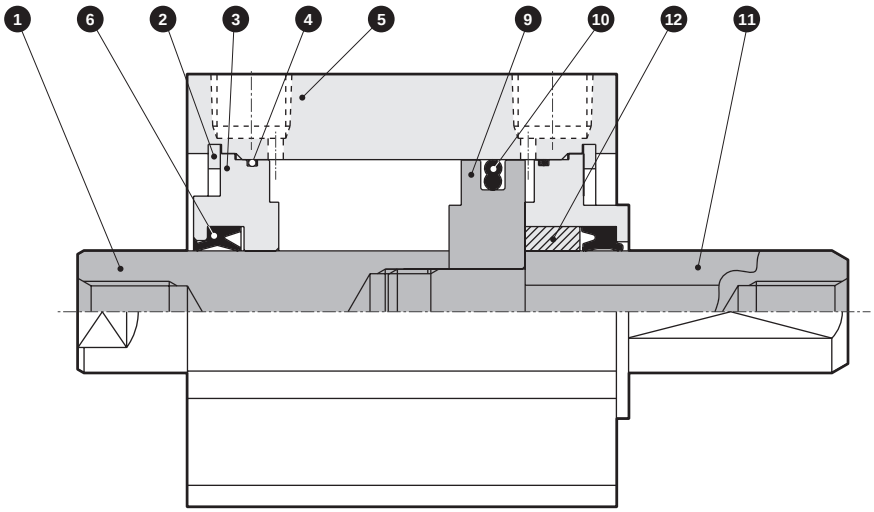

No.	Part name	Material	Remarks	No.	Part name	Material	Remarks
1	Piston rod	Steel	Industrial chrome plating	7	Spacer	Aluminum alloy	ø32: Chromate
2	C-snap ring	Steel	Zinc phosphate	8	Magnet	Plastic	
3	Rod metal	Special aluminum	Chromate	9	Piston	Aluminum alloy	Chromate
4	Rod metal gasket	Nitrile rubber		10	Piston packing	Nitrile rubber	
5	Body	Aluminum alloy	Hard alumite	11	Piston rod B	Steel	Industrial chrome plating
6	Rod packing	Nitrile rubber		12	Bush	Oil impregnated bearing alloy	

Repair parts list

Bore size (mm)	Kit No.	Repair parts No.
ø32	SSD2-DM-32K	4 6 10
ø40	SSD2-DM-40K	
ø50	SSD2-DM-50K	
ø63	SSD2-DM-63K	

SCP*3
CMK2
CMA2
SCM
SCG
SCA2
SCS2
CKV2
CAV2/COVP/N2
SSD2
SSG
SSD
CAT
MDC2
MVC
SMG
MSD/MSDG
FC*
STK
SRL3
SRG3
SRM3
SRT3
MRL2
MRG2
SM-25
ShkAbs
FJ
FK
Spd Contr
Ending

Dimensions

● SSD2-DML-12 to 25 (with switch)

ø12/ø16

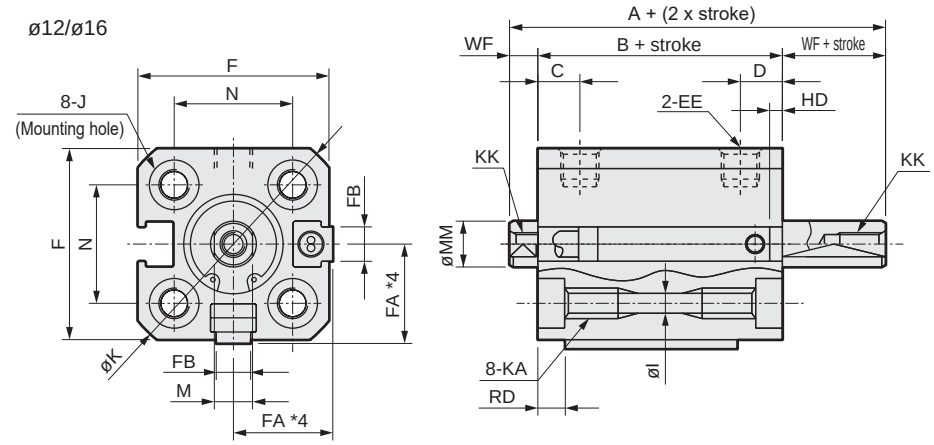

● Rod end male thread

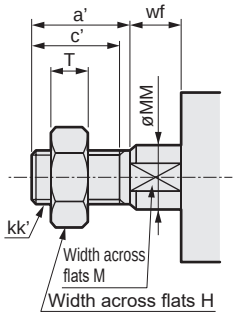

ø20/ø25

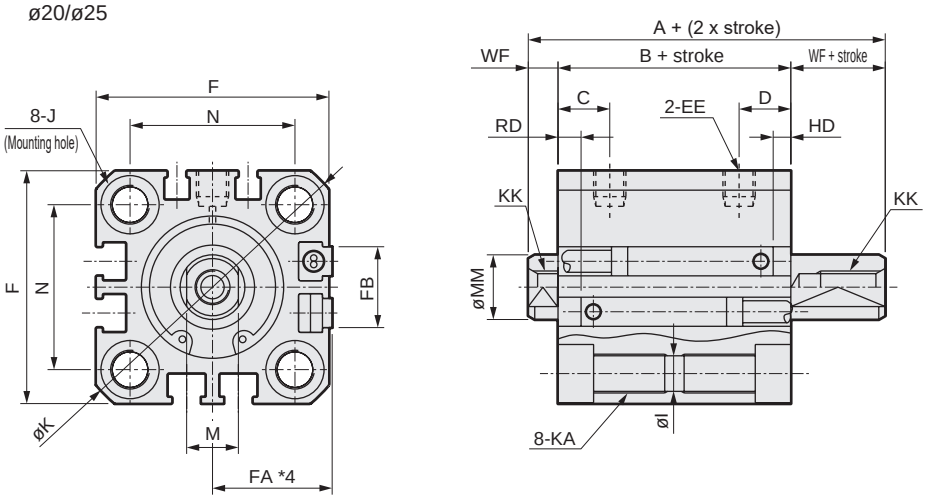

Note: The positions for the left and right widths across flats are unspecified.

Code / Bore size (mm)	Common dimensions with switch																
	A	B	C	D	EE	F	FA *4	FB	I	J	K	KA	KK	M	MM	N	WF
ø12	39	32	5.5	10.5	M5	25	13(16.5)	4.5	3.5	6.5 spot face depth 3.5	32	M4 depth 7	M3 depth 6	5	6	15.5	3.5
ø16	39	32	5.5	10.5	M5	29	15(18.5)	4.5	3.5	6.5 spot face depth 3.5	38	M4 depth 7	M4 depth 8	6	8	20	3.5
ø20	50	41	8	13	M5	36	18.5(22)	12.5	5.5	9 spot face depth 5.5	47	M6 depth 11	M5 depth 7	8	10	25.5	4.5
ø25	54	44	11	16	M5	40	20.5(24)	13.5	5.5	9 spot face depth 5.5	51	M6 depth 11	M6 depth 12	10	12	28	5

Switch dimensions / Bore size (mm)	Reed T0H/T0V, T5H/T5V *6		Proximity T2H/T2V, T3H/T3V *6		Proximity T2WH/T2WV, T3WH/T3WV *6		Proximity F2H/F2V, F3H/F3V, F2YH/F2YV, F3YH/F3YV		Proximity F2S/F3S	
	HD	RD	HD	RD	HD	RD	HD	RD	HD	RD
ø12	10	2.5	10	2.5	11.5	4				
ø16	10	2	10	2	11.5	3.5				
ø20	14.5	6.5	14.5	6.5	16	8	19	12	18	11
ø25	16.5	9.5	16.5	9.5	18	11	20	13	19	12

*1 : Only F-switch is available for the ø20 or ø25 piping port surface.
*2 : HD and RD dimensions for 5 mm stroke differ from these dimensions according to the setting.
3 : Refer to page 1044 for HD, RD and protruding dimensions of the 2-color LED, off-delay, AC magnetic field proof, T1 and T8* switches.
*4 : Dimensions in ( ) of FA are for the L-shaped lead wire.
*5 : For dimensions of individual accessories, refer to pages 1046 to 1049.
*6 : Dimensions in ( ) of codes HD and RD are for the type with rubber cushion.
*7 : The RD side can be identified with a mark on the port surface of the body.

● Dimensions of rod end male thread part

Code / Bore size (mm)	a'	c'	H	kk'	M	MM	T	wf
ø12	10.5	9	8	M5	5	6	3.2	3.5
ø16	12	10	10	M6	6	8	3.6	3.5
ø20	14	12	13	M8	8	10	5	4.5
ø25	17.5	15	17	M10x1.25	10	12	6	5

Dimensions with mounting bracket

● Axial foot (LB) with switch
SSD2-DML-12 to 25 -LB

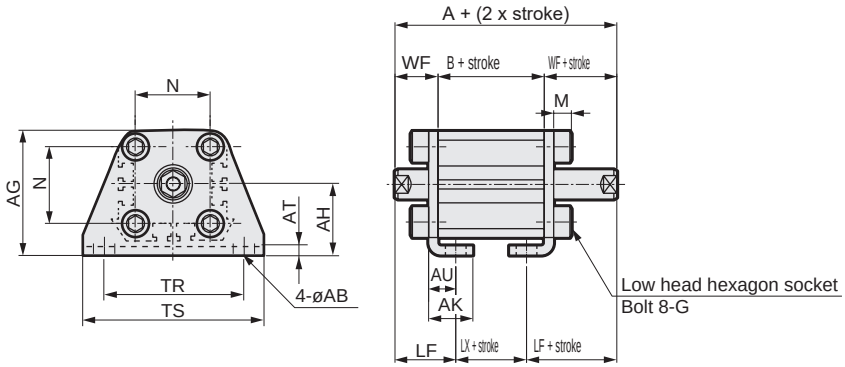

Rod end male thread

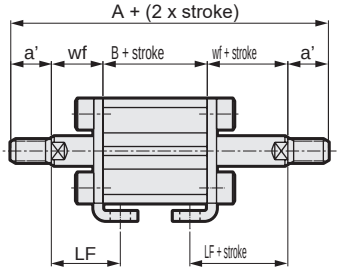

Code / Bore size (mm)	Common dimensions										
	AB	AG	AH	AK	AT	AU	G	N	TR	TS	M
ø12	5	29.5	17	12.5	2	8	M4x10	15.5	34	44	4.8
ø16	5	33.5	19	13	2	8	M4x10	20	38	48	4.8
ø20	7	42	24	15	3.2	9.2	M6x16	25.5	48	62	7.2
ø25	7	46	26	16.5	3.2	10.7	M6x16	28	52	66	7.2

Code / Bore size (mm)	Female thread					Male thread					
	WF	LF	A	B	LX	a'	wf	LF	A	B	LX
ø12	13.5	19.5	59	32	15	10.5	13.5	19.5	80	32	15
ø16	13.5	19.5	59	32	15	12	13.5	19.5	83	32	15
ø20	14.5	20.5	70	41	19	14	14.5	20.5	98	41	19
ø25	15	22.5	74	44	19	17.5	15	22.5	109	44	19

● Rod side flange (FA) with switch
SSD2-DML-12 to 25 -FA

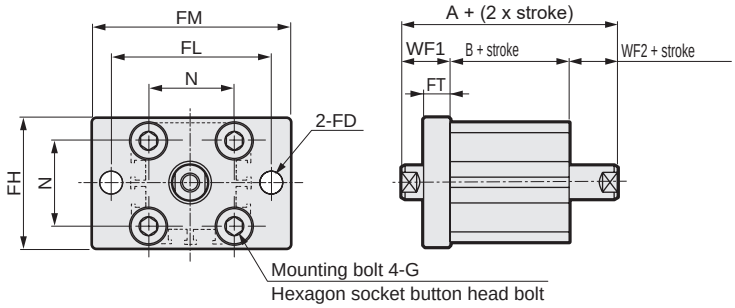

Rod end male thread

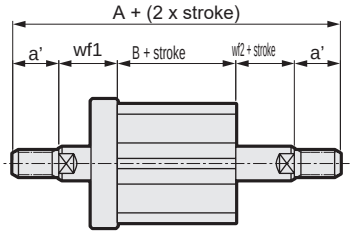

Code / Bore size (mm)	Common dimensions							Female thread				Male thread				
	FD	FH	FL	FM	FT	N	G	WF1	WF2	A	B	a'	wf1	wf2	A	B
ø12	4.5	25	45	55	5.5	15.5	M4x12	13.5	3.5	49	32	10.5	13.5	3.5	70	32
ø16	4.5	30	45	55	5.5	20	M4x12	13.5	3.5	49	32	12	13.5	3.5	73	32
ø20	6.6	39	48	60	8	25.5	M6x16	14.5	4.5	60	41	14	14.5	4.5	88	41
ø25	6.6	42	52	64	8	28	M6x16	15	5	64	44	17.5	15	5	99	44

Dimensions

● SSD2-DM-12 to 25 (without switch)

ø12/ø16

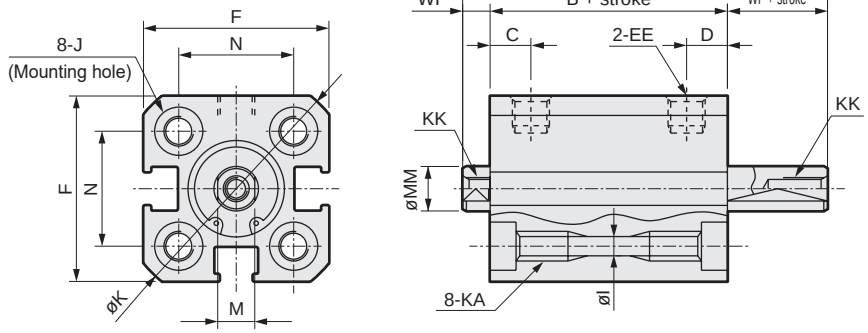

● Rod end male thread

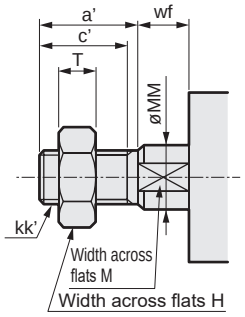

ø20/ø25

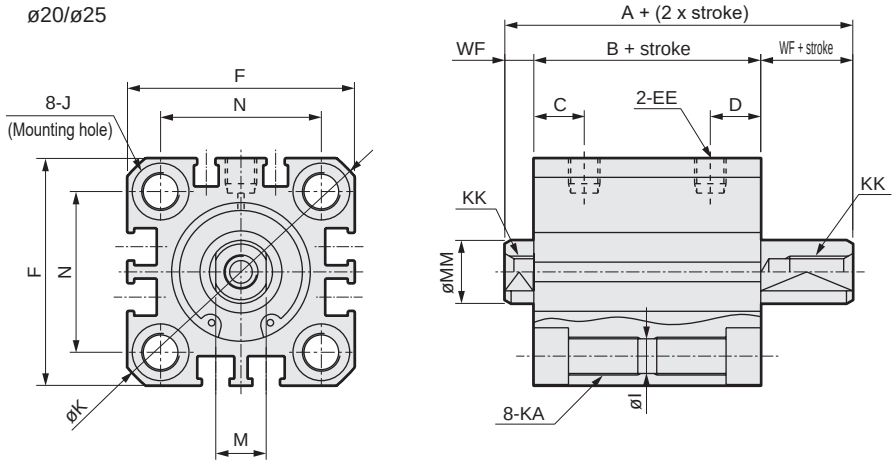

Note: The positions for the left and right widths across flats are unspecified.

Code / Bore size (mm)	Dimensions without switch and common dimensions														
	A	B	C	D	EE	F	I	J	K	KA	KK	M	MM	N	WF
ø12	34	27	5.5	10.5	M5	25	3.5	6.5 spot face depth 3.5	32	M4 depth 7	M3 depth 6	5	6	15.5	3.5
ø16	34	27	5.5	10.5	M5	29	3.5	6.5 spot face depth 3.5	38	M4 depth 7	M4 depth 8	6	8	20	3.5
ø20	40	31	8	13	M5	36	5.5	9 spot face depth 5.5	47	M6 depth 11	M5 depth 7	8	10	25.5	4.5
ø25	44	34	11	16	M5	40	5.5	9 spot face depth 5.5	51	M6 depth 11	M6 depth 12	10	12	28	5

● Dimensions of rod end male thread part

Code / Bore size (mm)	a'	c'	H	kk'	M	MM	T	wf
ø12	10.5	9	8	M5	5	6	3.2	3.5
ø16	12	10	10	M6	6	8	3.6	3.5
ø20	14	12	13	M8	8	10	5	4.5
ø25	17.5	15	17	M10x1.25	10	12	6	5

*1: For dimensions of individual accessories, refer to pages 1046 to 1049.

Dimensions with mounting bracket

● Axial foot (LB) without switch
SSD2-DM-12 to 25 -LB

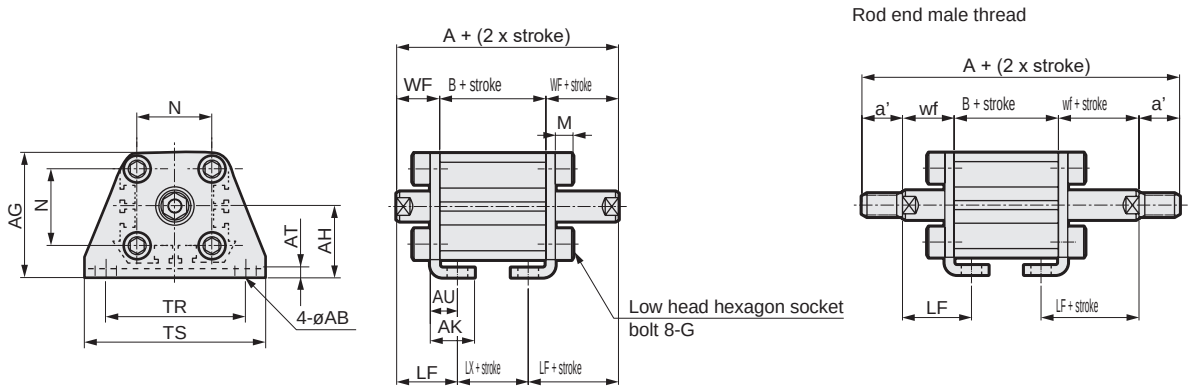

Code / Bore size (mm)	Common dimensions										
	AB	AG	AH	AK	AT	AU	G	N	TR	TS	M
ø12	5	29.5	17	12.5	2	8	M4x10	15.5	34	44	4.8
ø16	5	33.5	19	13	2	8	M4x10	20	38	48	4.8
ø20	7	42	24	15	3.2	9.2	M6x16	25.5	48	62	7.2
ø25	7	46	26	16.5	3.2	10.7	M6x16	28	52	66	7.2

Code / Bore size (mm)	Female thread					Male thread					
	WF	LF	A	B	LX	a'	wf	LF	A	B	LX
ø12	13.5	19.5	54	27	15	10.5	13.5	19.5	75	27	15
ø16	13.5	19.5	54	27	15	12	13.5	19.5	78	27	15
ø20	14.5	20.5	60	31	19	14	14.5	20.5	88	31	19
ø25	15	22.5	64	34	19	17.5	15	22.5	99	34	19

● Rod side flange (FA) without switch
SSD2-DM-12 to 25 -FA

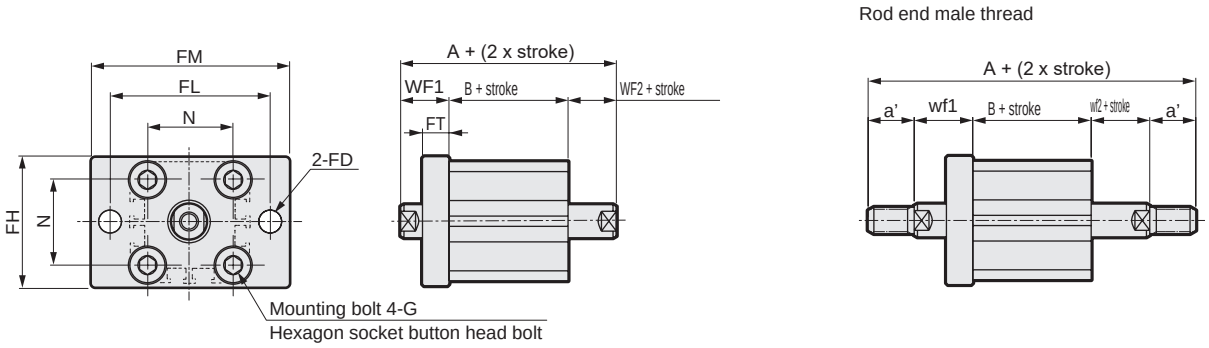

Code / Bore size (mm)	Common dimensions							Female thread				Male thread				
	FD	FH	FL	FM	FT	N	G	WF1	WF2	A	B	a'	wf1	wf2	A	B
ø12	4.5	25	45	55	5.5	15.5	M4x12	13.5	3.5	44	27	10.5	13.5	3.5	65	27
ø16	4.5	30	45	55	5.5	20	M4x12	13.5	3.5	44	27	12	13.5	3.5	68	27
ø20	6.6	39	48	60	8	25.5	M6x16	14.5	4.5	50	31	14	14.5	4.5	78	31
ø25	6.6	42	52	64	8	28	M6x16	15	5	54	34	17.5	15	5	89	34

SCP*3
CMK2
CMA2
SCM
SCG
SCA2
SCS2
CKV2
CAV2/COVP/N2
SSD2
SSG
SSD
CAT
MDC2
MVC
SMG
MSD/MSDG
FC*
STK
SRL3
SRG3
SRM3
SRT3
MRL2
MRG2
SM-25
ShkAbs
FJ
FK
Spd Contr
Ending

Dimensions CAD

● SSD2-DML-32 to 63 (with switch)

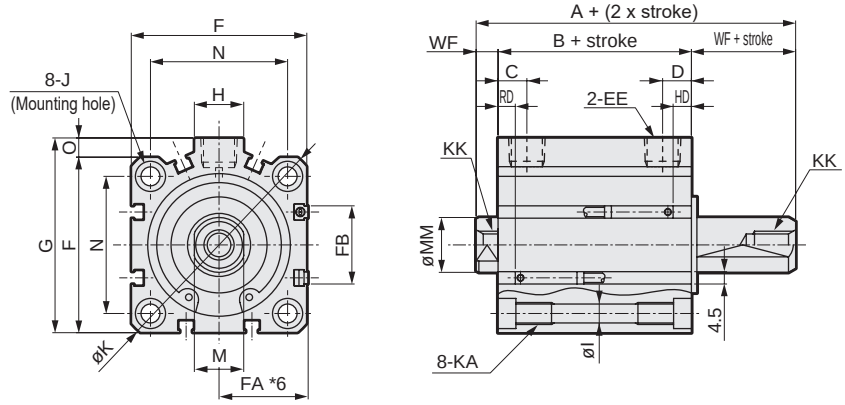

● Rod end male thread

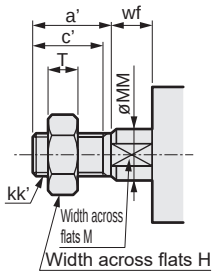

● SSD2-DM-32 to 63 (without switch)

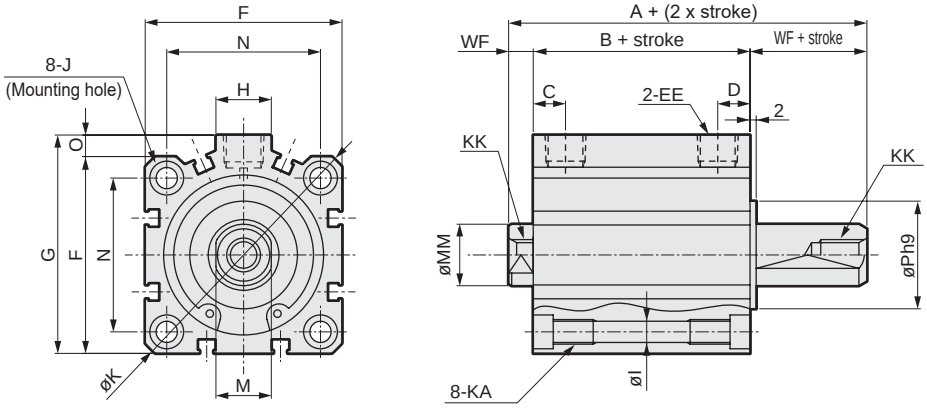

Note: The positions for the left and right widths across flats are unspecified.

Code / Bore size (mm)	No switch A *2, *8	No switch B *3, *8	Common dimensions with switch A *2	B *3	C *10	D *10	EE *9	F	FA *6	FB	G	H	I	J	K	KA	KK
ø32	53.5(63.5)	39.5(49.5)	63.5	49.5	8(5.5)	18(20)	Rc1/8	45	23(26.5)	20.5	49.5	12.5	5.5	9 spot face depth 5.5	60	M6 depth 11	M8 depth 13
ø40	54(64)	40(50)	64	50	12	12	Rc1/8	52	26.5(30)	27.5	57	15	5.5	9 spot face depth 5.5	69	M6 depth 11	M8 depth 13
ø50	56.5(66.5)	40.5(50.5)	66.5	50.5	10.5	10.5	Rc1/4	64	32.5(36)	28.5	71	18	6.9	11 spot face depth 6.5	86	M8 depth 13	M10 depth 15
ø63	58(68)	42(52)	68	52	13	13	Rc1/4	77	39(42.5)	28.5	84	23	8.7	14 spot face depth 9	103	M10 depth 25	M10 depth 15

Code / Bore size (mm)	Common dimensions with switch M	MM	N	O	P	WF	Switch dimensions: Reed T0H/T0V, T5H/T5V HD *4	Reed T0H/T0V, T5H/T5V RD *4	Proximity T2H/T2V, T3H/T3V HD *4	Proximity T2H/T2V, T3H/T3V RD *4	Proximity T2WH/T2WV, T3WH/T3WV HD	Proximity T2WH/T2WV, T3WH/T3WV RD
ø32	14	16	34	4.5	21	7	20	9	20	9	21.5	10.5
ø40	14	16	40	5	28	7	16.5	12	16.5	12	18	13.5
ø50	17	20	50	7	35	8	16.5	12.5	16.5	12.5	18	14
ø63	17	20	60	7	35	8	18	13	18	13	19.5	14.5

*1 : Custom stroke is available only for more than 50 mm strokes.
*2 : To calculate A + (2 x stroke) when using a custom stroke, apply "A + next longer standard stroke + custom stroke". (Example) If the custom stroke is 70 mm, apply "A + standard stroke 75 mm + custom stroke 70 mm".
*3 : To calculate B + stroke when using custom stroke, apply the next longer standard stroke instead of the custom stroke. (Example) If the custom stroke is 70 mm, apply the standard stroke 75 mm.
*4 : HD and RD dimensions for 5 mm stroke differ from these dimensions according to the setting.
5 : Refer to page 1044 for HD, RD and protruding dimensions of the 2-color LED, off-delay, AC magnetic field proof, T1 and T8* switches.
*6 : Dimensions in ( ) of FA are for the L-shaped lead wire.
*7 : For dimensions of individual accessories, refer to pages 1046 to 1049.
*8 : Dimensions in ( ) of codes A and B are for strokes of more than 50 mm.
*9 : The ø32 bore size with a 5 mm stroke and without a switch has a port size of M5.*10 : Dimensions in ( ) of codes C and D are when the value is for a 5 mm stroke without switch.
*11 : The RD side can be identified with a mark on the port surface of the body.

● Dimensions of rod end male thread part

Code / Bore size (mm)	a'	c'	H	kk'	M	MM	T	wf
ø32	23.5	20.5	22	M14x1.5	14	16	8	5
ø40	23.5	20.5	22	M14x1.5	14	16	8	5
ø50	28.5	26	27	M18x1.5	17	20	11	5
ø63	28.5	26	27	M18x1.5	17	20	11	5

Dimensions with mounting bracket

● Axial foot (LB)
SSD2-DM(L)-32 to 63-LB

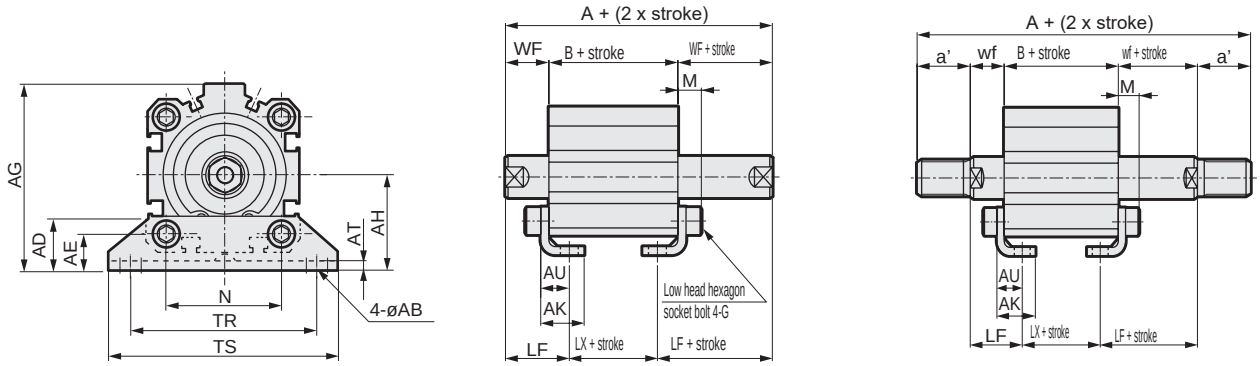

Code / Bore size (mm)	Common dimensions												
	AB	AD	AE	AG	AH	AK	AT	AU	G	N	TR	TS	M
ø32	7	18.5	13	57	30	17	3.2	11.2	M6x16	34	57	71	7.2
ø40	7	18	13	64	33	18.2	3.2	11.2	M6x16	40	64	78	7.2
ø50	9	22	14	78	39	22.7	3.2	14.7	M8x20	50	79	95	8.2
ø63	11	26	16	91.5	46	25.2	3.2	16.2	M10x25	60	95	113	9.2

Code / Bore size (mm)	Female thread								Male thread								
	WF	LF	No switch			With switch			a'	wf	LF	No switch			With switch		
			A	B	LX	A	B	LX				A	B	LX	A	B	LX
ø32	17	25	64.5(74.5)	30.5(40.5)	14.5(24.5)	74.5	40.5	24.5	23.5	15	23	107.5(117.5)	30.5(40.5)	14.5(24.5)	117.5	40.5	24.5
ø40	17	25	74(84)	40(50)	24(34)	84	50	34	23.5	15	23	117(127)	40(50)	24(34)	127	50	34
ø50	18	29.5	76.5(86.5)	40.5(50.5)	17.5(27.5)	86.5	50.5	27.5	28.5	15	26.5	127.5(137.59)	40.5(50.5)	17.5(27.5)	137.5	50.5	27.5
ø63	18	31	78(88)	42(52)	16(26)	88	52	26	28.5	15	28	129(139)	42(52)	16(26)	139	52	26

* Dimensions in ( ) are for strokes of more than 50 mm.

● Rod side flange (FA)
SSD2-DM(L)-32 to 63-FA

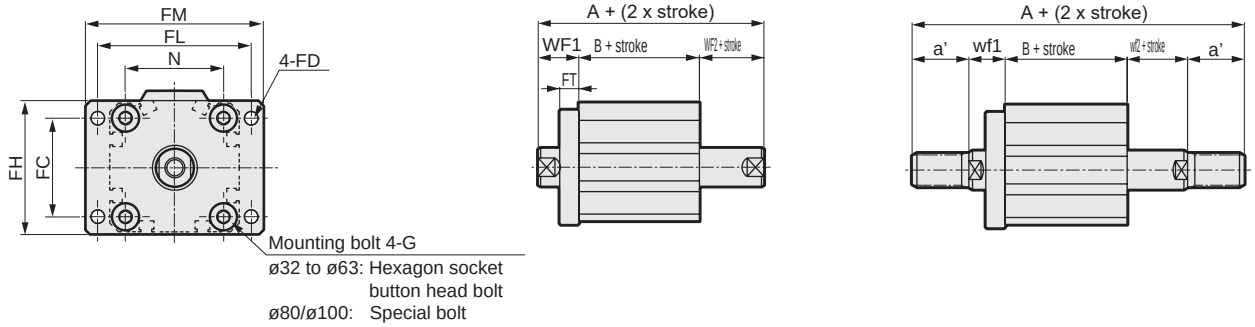

Code / Bore size (mm)	Common dimensions							
	FC	FD	FH	FL	FM	FT	N	G
ø32	34	5.5	48	56	65	8	34	M6x16
ø40	40	5.5	54	62	72	8	40	M6x16
ø50	50	6.6	67	76	89	9	50	M8x20
ø63	60	9	80	92	108	9	60	M10x25

Code / Bore size (mm)	Female thread						Male thread						
	WF1	WF2	No switch		With switch		a'	wf1	wf2	No switch		With switch	
			A	B	A	B				A	B	A	B
ø32	17	7	54.5(64.5)	30.5(40.5)	64.5	40.5	23.5	15	5	97.5(107.5)	30.5(40.5)	107.5	40.5
ø40	17	7	64(74)	40(50)	74	50	23.5	15	5	107(117)	40(50)	117	50
ø50	18	8	66.5(76.5)	40.5(50.5)	76.5	50.5	28.5	15	5	117.5(127.5)	40.5(50.5)	127.5	50.5
ø63	18	8	68(78)	42(52)	78	52	28.5	15	5	119(129)	42(52)	129	52

* Dimensions in ( ) are for strokes of more than 50 mm.

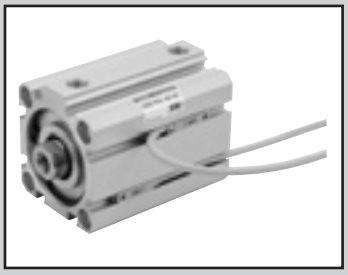

Compact cylinder double acting/single rod/rubber scraper

SSD2-G Series

● Bore size: ø20/ø25/ø32/ø40/ø50/ø63/ø80/ø100

JIS symbol 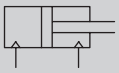

RoHS

Specifications

Item	SSD2-G SSD2-GL (with switch)							
Bore size mm	ø20	ø25	ø32	ø40	ø50	ø63	ø80	ø100
Actuation	Double acting							
Working fluid	Compressed air							
Max. working pressure MPa	1.0 (≈150 psi, 10 bar)							
Min. working pressure MPa	0.15 (≈22 psi, 1.5 bar)					0.1 (≈15 psi, 1 bar)		
Proof pressure MPa	1.6 (≈230 psi, 16 bar)							
Ambient temperature °C	-10 (14°F) to 60 (140°F) (no freezing)							
Port size	M5		Rc1/8 *1		Rc1/4		Rc3/8	
Stroke tolerance mm	$^{+1.0}_{0}$							
Working piston speed mm/s	50 to 500					50 to 300		
Cushion	None							
Lubrication	Not required (use turbine oil class 1 ISO VG32 if necessary for lubrication)							
Allowable absorbed energy J	0.016	0.021	0.025	0.092	0.1	0.12	0.27	0.56

*1: The ø32 bore size with a 5 mm stroke and without a switch has a port size of M5.

Stroke

Bore size (mm)	Standard stroke (mm)	Max. stroke (mm)	Min. stroke (mm)
ø20	5/10/15/20/25 30/35/40/45/50	50	1
ø25			
ø32	5/10/15/20/25/30/ 35/40/45/50/75/100	100	
ø40			
ø50	10/15/20/25 30/35/40/45/50 75/100		
ø63			
ø80			
ø100			

*1: When using the type with switch, refer to the table of the min. stroke with switch.

Min. stroke with switch (2 switches)

Bore size (mm)	T0H/V / T5H/V	T2H/V / T3H/V
ø20	5	5
ø25		
ø32		
ø40		
ø50		
ø63		
ø80		
ø100		

1: Less than 10 mm with the 2-color LED, off-delay, AC magnetic field proof, T1 or T8* switch is not available.

Custom stroke

● SSD2 Series

Item	Standard products Standard stroke body with spacer	
Model No.	Refer to How to order.	
Description	A spacer is added to the standard stroke body to adjust the stroke in 1 mm increments.	
Stroke range	Bore size	Stroke range
	20 to 25	1 to 49
	32 to 100	1 to 99
Example of model No.	Model No.: SSD2-G-32-38 A +2 mm spacer is added to the SSD2-G-32-40 standard cylinder to create 38 mm stroke. B + stroke is 63 mm.	

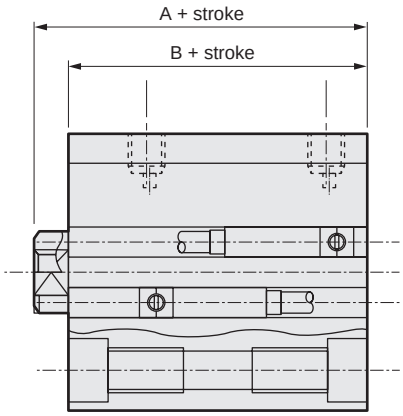

Switch specifications (F-switch)

● 1-color/2-color LED

Item	2-wire proximity	3-wire proximity	2-wire proximity		3-wire proximity		
	F2S	F3S	F2H/F2V	F2YH/F2YV	F3H/F3V	F3PH/F3PV (made to order)	F3YH/F3YV
Applications	Dedicated for programmable controller	For programmable controller, relay	Dedicated for programmable controller		For programmable controller, relay		
Output method	-	NPN output	-		NPN output	PNP output	NPN output
Power supply voltage	-	10 to 28 VDC	-		10 to 28 VDC	4.5 to 28 VDC	10 to 28 VDC
Load voltage	10 to 30 VDC	30 VDC or less	10 to 30 VDC	24 VDC ±10%	30 VDC or less		
Load current	5 to 20 mA	50 mA or less	5 to 20 mA		50 mA or less		
Indicator	LED (Lit when ON)		Yellow LED (Lit when ON)	Red/green LED (Lit when ON)	Yellow LED (Lit when ON)		Red/green LED (Lit when ON)
Leakage current	1 mA or less	10 μA or less	1 mA or less		10 μA or less		
Weight g	1 m:10 3 m:29						

Switch specifications (T-switch)

● 1-color/2-color LED/for AC magnetic field proof

Item	2-wire proximity	2-wire proximity			3-wire proximity				2-wire reed							2-wire proximity
	T1H/T1V	T2H/T2V/ T2JH/T2JV	T2YH/ T2YV	T2WH/ T2WV	T3H/ T3V	T3PH/ T3PV	T3YH/ T3YV	T3WH/ T3WV	T0H/T0V		T5H/T5V		T8H/T8V			T2YD(*4) T2YDT
Applications	For programmable controller, relay, compact solenoid valve	Dedicated for programmable controller			For programmable controller, relay				For programmable controller, relay		For programmable controller, relay, IC circuit (no indicator lamp), serial connection		For programmable controller, relay			Dedicated for programmable controller
Output method	-				NPN output	PNP output	NPN output	NPN output	-							
Pwr. supp. V.	-				10 to 28 VDC				-							
Load voltage	85 to 265 VAC	10 to 30 VDC		24 VDC ±10%	30 VDC or less				12/24 VDC	100/110 VAC	5/12/24 VDC	100/110 VAC	12/24 VDC	110 VAC	220 VAC	24 VDC ±10%
Load current	5 to 100 mA	5 to 20 mA (*3)			100 mA or less		50 mA or less		5 to 50 mA	7 to 20 mA	50 mA or less	20 mA or less	5 to 50 mA	7 to 20 mA	7 to 10 mA	5 to 20 mA
Indicator	LED (Lit when ON)	LED (Lit when ON)	Red/green LED (Lit when ON)	Red/green LED (Lit when ON)	LED (Lit when ON)	Yellow LED (Lit when ON)	Red/green LED (Lit when ON)	Red/green LED (Lit when ON)	LED (Lit when ON)		No indicator lamp		LED (Lit when ON)			Red/green LED (Lit when ON)
Leakage current	≤ 1 mA at 100 VAC, ≤ 2 mA at 200 VAC	1 mA or less			10 μA or less				0 mA							1 mA or less
Weight g	1 m:33 3 m:87 5 m:142	1 m:18 3 m:49 5 m:80	1 m:33 3 m:87 5 m:142	1 m:18 3 m:49 5 m:80	1 m:18 3 m:49 5 m:80		1 m:33 3 m:87 5 m:142	1 m:18 3 m:49 5 m:80	1 m:18 3 m:49 5 m:80				1 m:33 3 m:87 5 m:142			1 m:61 3 m:166 5 m:272

*1 : Refer to Ending Page 1 for detailed switch specifications and dimensions.
*2 : Switches other than the above models, such as switches with connectors, are also available. Refer to Ending Page 1.
*3 : The max. load current is 20 mA at 25°C. The current is lower than 20 mA if the operating ambient temperature around the switch is higher than 25˚C. (5 to 10 mA at 60°C)
*4 : Switch for AC magnetic field (T2YD/T2YDT) cannot be used in DC magnetic field.
*5 : The F-switch uses a bend-resistant lead wire.

Cylinder weight table

(the weight of the switches is when there are 2 cylinder switches.)

(Unit: g)

Stroke (mm)	5		10		15		20		25		30		35		40		45		50		75		100	
Bore size (mm)	No switch	Switch	No switch	Switch	No switch	Switch	No switch	Switch	No switch	Switch	No switch	Switch	No switch	Switch	No switch	Switch	No switch	Switch	No switch	Switch	No switch	Switch	No switch	Switch
ø20	108	163	120	195	133	208	146	221	158	233	171	246	184	259	197	272	210	285	223	298	-	-	-	-
ø25	151	242	166	257	182	273	198	289	214	305	229	320	245	336	261	352	293	384	292	383	-	-	-	-
ø32	230	344	252	366	274	388	296	410	317	431	339	453	361	475	383	497	427	519	426	540	487	648	707	755
ø40	301	444	328	471	354	497	381	524	408	551	434	577	461	604	487	630	540	657	540	683	625	816	890	948
ø50	-	-	513	707	555	749	597	791	639	833	682	876	734	918	766	960	890	1002	850	1044	787	1254	1307	1464
ø63	-	-	733	1012	788	1067	843	1122	898	1177	953	1232	1009	1288	1064	1343	1175	1398	1174	1453	1384	1728	1939	2003
ø80	-	-	1532	1945	1619	2032	1705	2118	1792	2203	1878	2288	1965	2377	2052	2465	2226	2552	2225	2638	2564	3071	3434	3503
ø100	-	-	2212	2779	2326	2893	2439	3006	2553	3120	2667	3234	2781	3348	2894	3461	3121	3575	3122	3689	3622	4259	4757	4829

Theoretical thrust table

(Unit: N)

Bore size (mm)	Operating direction	Working pressure MPa										
		0.1	0.15	0.2	0.3	0.4	0.5	0.6	0.7	0.8	0.9	1.0
ø20	Push	-	47.1	62.8	94.2	1.26×10^2	1.57×10^2	1.88×10^2	2.20×10^2	2.51×10^2	2.83×10^2	3.14×10^2
	Pull	-	35.3	47.1	70.7	94.2	1.18×10^2	1.41×10^2	1.65×10^2	1.88×10^2	2.12×10^2	2.36×10^2
ø25	Push	-	73.6	98.2	1.47×10^2	1.96×10^2	2.45×10^2	2.95×10^2	3.44×10^2	3.93×10^2	4.42×10^2	4.91×10^2
	Pull	-	56.7	75.6	1.13×10^2	1.51×10^2	1.89×10^2	2.27×10^2	2.64×10^2	3.02×10^2	3.40×10^2	3.78×10^2
ø32	Push	-	1.21×10^2	1.61×10^2	2.41×10^2	3.22×10^2	4.02×10^2	4.83×10^2	5.63×10^2	6.43×10^2	7.24×10^2	8.04×10^2
	Pull	-	90.5	1.21×10^2	1.81×10^2	2.41×10^2	3.02×10^2	3.62×10^2	4.22×10^2	4.83×10^2	5.43×10^2	6.03×10^2
ø40	Push	-	1.88×10^2	2.51×10^2	3.77×10^2	5.03×10^2	6.28×10^2	7.54×10^2	8.80×10^2	1.01×10^3	1.13×10^3	1.26×10^3
	Pull	-	1.58×10^2	2.11×10^2	3.17×10^2	4.22×10^2	5.28×10^2	6.33×10^2	7.39×10^2	8.44×10^2	9.50×10^2	1.06×10^3
ø50	Push	-	2.95×10^2	3.93×10^2	5.89×10^2	7.85×10^2	9.82×10^2	1.18×10^3	1.37×10^3	1.57×10^3	1.77×10^3	1.96×10^3
	Pull	-	2.47×10^2	3.30×10^2	4.95×10^2	6.60×10^2	8.25×10^2	9.90×10^2	1.15×10^3	1.32×10^3	1.48×10^3	1.65×10^3
ø63	Push	3.12×10^2	4.68×10^2	6.23×10^2	9.35×10^2	1.25×10^3	1.56×10^3	1.87×10^3	2.18×10^3	2.49×10^3	2.81×10^3	3.12×10^3
	Pull	2.80×10^2	4.20×10^2	5.61×10^2	8.41×10^2	1.12×10^3	1.40×10^3	1.68×10^3	1.96×10^3	2.24×10^3	2.52×10^3	2.80×10^3
ø80	Push	5.03×10^2	7.54×10^2	1.01×10^3	1.51×10^3	2.01×10^3	2.51×10^3	3.02×10^3	3.52×10^3	4.02×10^3	4.52×10^3	5.03×10^3
	Pull	4.54×10^2	6.80×10^2	9.07×10^2	1.36×10^3	1.81×10^3	2.27×10^3	2.72×10^3	3.17×10^3	3.63×10^3	4.08×10^3	4.54×10^3
ø100	Push	7.85×10^2	1.18×10^3	1.57×10^3	2.36×10^3	3.14×10^3	3.93×10^3	4.71×10^3	5.50×10^3	6.28×10^3	7.07×10^3	7.85×10^3
	Pull	7.15×10^2	1.07×10^3	1.43×10^3	2.14×10^3	2.86×10^3	3.57×10^3	4.29×10^3	5.00×10^3	5.72×10^3	6.43×10^3	7.15×10^3

SCP*3
CMK2
CMA2
SCM
SCG
SCA2
SCS2
CKV2
CAV2/COVP/N2
SSD2
SSG
SSD
CAT
MDC2
MVC
SMG
MSD/MSDG
FC*
STK
SRL3
SRG3
SRM3
SRT3
MRL2
MRG2
SM-25
ShkAbs
FJ
FK
Spd Contr
Ending

How to order

No switch (without magnet for switch)

SSD2-G - 32 - 5 ———— N - LB - I

With switch (built-in magnet for switch)

SSD2-GL - 32 - 10 - T0H - R - N - LB - I

- Ⓐ Model No.
- Ⓑ Bore size
- Ⓒ Stroke
- Ⓓ Switch model No. *1 *2 *5 *6
- Ⓔ Switch quantity
- Ⓕ Option
- Ⓖ Mounting bracket *3 *8
- Ⓗ Accessory *4

⚠ Precautions for model No. selection

1 : The T8 switch cannot be mounted on the ø20 to ø32 bore sizes.
*2 : The F-switch can only be mounted on the piping port surface of bore sizes ø20 and ø25.
*3 : The mounting bracket is included at shipment.
*4 : "I" and "Y" cannot be selected together.
*5 : The F-switch with L type lead wire on ø20 models cannot be selected on strokes of 15 mm or under.
*6 : Switches are shipped with the product. Contact CKD if assembling before shipment is necessary.
*7 : F-switch cannot be selected.
*8 : The structure of bore sizes ø20 to ø32 does not permit retrofitting of the foot bracket (LB) or flange bracket (FA) on the rod side. Assembly before shipment is available as made to order.

[Example of model No.]

SSD2-GL-20-10-T0H-R-N-LB-I

Model: Compact cylinder rubber scraper

- Ⓑ Bore size : ø20 mm
- Ⓒ Stroke : 10 mm
- Ⓓ Switch model No. : Reed T0H switch/ Lead wire length 1 m
- Ⓔ Switch quantity : 1 on rod side
- Ⓕ Option : Rod end male thread
- Ⓖ Mounting bracket : Axial foot
- Ⓗ Accessory : Rod eye

Code	Description
Ⓐ Model No.	
SSD2-G	Double acting/single rod/rubber scraper
SSD2-GL	Double acting/single rod/rubber scraper/with switch

Ⓑ Bore size (mm)	
20	ø20
25	ø25
32	ø32
40	ø40
50	ø50
63	ø63
80	ø80
100	ø100

Ⓒ Stroke (mm)

Refer to the stroke table on the following page.

Ⓓ Switch model No.

Lead wire Straight	Lead wire L-shaped	Contact	Voltage AC	Voltage DC	Indicator	Lead wire	Bore size 20	25	32	40	50	63	80	100
-	F2S*	Proximity		●	1-color LED	2-wire	●	●						
-	F3S*	Proximity		●	1-color LED	3-wire	●	●						
F2H*	F2V*	Proximity		●	1-color LED	2-wire	●	●						
F3H*	F3V*	Proximity		●	1-color LED	3-wire	●	●						
F3PH*	F3PV*	Proximity		●	1-color LED (PNP output) (custom)	3-wire	●	●						
F2YH*	F2YV*	Proximity		●	2-color LED	2-wire	●	●						
F3YH*	F3YV*	Proximity		●	2-color LED	3-wire	●	●						
T0H*	T0V*	Reed	●	●	1-color LED	2-wire	●	●	●	●	●	●	●	●
T5H*	T5V*	Reed	●	●	No indicator lamp	2-wire	●	●	●	●	●	●	●	●
T8H*	T8V*	Reed	●	●	1-color LED	2-wire				●	●	●	●	●
T1H*	T1V*	Proximity	●		1-color LED	2-wire	●	●	●	●	●	●	●	●
T2H*	T2V*	Proximity		●	1-color LED	2-wire	●	●	●	●	●	●	●	●
T3H*	T3V*	Proximity		●	1-color LED	3-wire	●	●	●	●	●	●	●	●
T3PH*	T3PV*	Proximity		●	1-color LED (PNP output)	3-wire	●	●	●	●	●	●	●	●
T2WH*	T2WV*	Proximity		●	2-color LED	2-wire	●	●	●	●	●	●	●	●
T2YH*	T2YV*	Proximity		●	2-color LED	2-wire	●	●	●	●	●	●	●	●
T3WH*	T3WV*	Proximity		●	2-color LED	3-wire	●	●	●	●	●	●	●	●
T3YH*	T3YV*	Proximity		●	2-color LED	3-wire	●	●	●	●	●	●	●	●
T2YD*	-	Proximity		●	2-color LED	2-wire	●	●	●	●	●	●	●	●
T2YDT*	-	Proximity		●	AC magnetic field	2-wire	●	●	●	●	●	●	●	●
T2JH*	T2JV*	Proximity		●	1-color LED off-delay	2-wire	●	●	●	●	●	●	●	●

*** Lead wire length**	
Blank	1 m (standard)
3	3 m (option)
5	5 m (option) *7

Ⓔ Switch quantity	
R	1 on rod side
H	1 on head side
D	2

Ⓕ Option	
Blank	Rod end female thread
N	Rod end male thread

Ⓖ Mounting bracket	
Blank	Without mounting bracket
LB	Axial foot (made-to-order product)
CB	Clevis bracket (pin and snap ring included)
FA	Rod side flange (made-to-order product)
FB	Head side flange

Ⓗ Accessory (available when rod end male thread "N" is selected)	
I	Rod eye
Y	Rod clevis (pin and snap ring included)

[Stroke table]

Stroke (mm)		Applicable bore size							
		20	25	32	40	50	63	80	100
Standard stroke	5	●	●	●	●				
	10	●	●	●	●	●	●	●	●
	15	●	●	●	●	●	●	●	●
	20	●	●	●	●	●	●	●	●
	25	●	●	●	●	●	●	●	●
	30	●	●	●	●	●	●	●	●
	35	●	●	●	●	●	●	●	●
	40	●	●	●	●	●	●	●	●
	45	●	●	●	●	●	●	●	●
	50	●	●	●	●	●	●	●	●
	75			●	●	●	●	●	●
	100			●	●	●	●	●	●
Min. stroke (mm) *1		1							
Max. stroke (mm)		50		100					
Custom stroke *2		In 1 mm increments							

1 : Less than 5 mm for 1-color LED switch and less than 10 mm for the 2-color LED, off-delay, AC magnetic field proof, T1 or T8* switch are not available.
Refer to page 936 for the min. stroke with switch.
*2 : The total length when using a custom stroke is the same as that when using the next longer standard stroke.

How to order switch

SW - T0H

Switch model No.
(Item Ⓓ on page 938)

How to order mounting bracket

Bore size (mm) / Mounting bracket	ø20	ø25	ø32	ø40	ø50	ø63	ø80
Foot (LB)				SSD2-LB-40	SSD2-LB-50	SSD2-LB-63	SSD2-LB-80
Flange (FA/FB)				SSD2-FA-40	SSD2-FA-50	SSD2-FA-63	SSD2-FA-80
Clevis bracket (CB)	SSD2-CB-20	SSD2-CB-25	SSD2-CB-32	SSD2-CB-40	SSD2-CB-50	SSD2-CB-63	SSD2-CB-80

Bore size (mm) / Mounting bracket	ø100
Foot (LB)	SSD2-LB-100
Flange (FA/FB)	SSD2-FA-100
Clevis bracket (CB)	SSD2-CB-100

*1: The foot mounting bracket is provided as 2 pcs./set.
*2: The structure of bore sizes ø20 to ø32 does not permit retrofitting of the foot bracket (LB) or flange bracket (FA) on the rod side. Contact CKD for details.

Internal structure and parts list

● SSD2-GL-20, 25 (double acting/single rod/rubber scraper/ with switch)

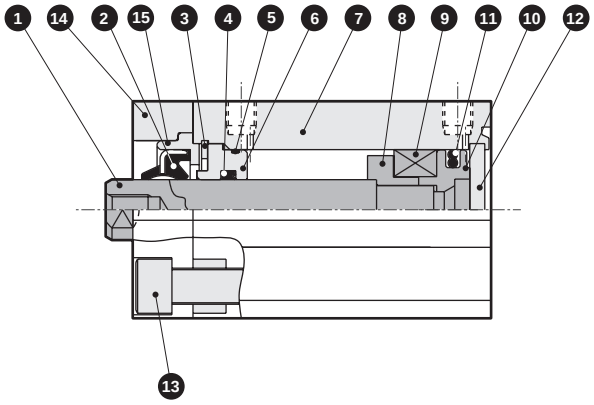

● SSD2-GL-32 (double acting/single rod/rubber scraper/ with switch)

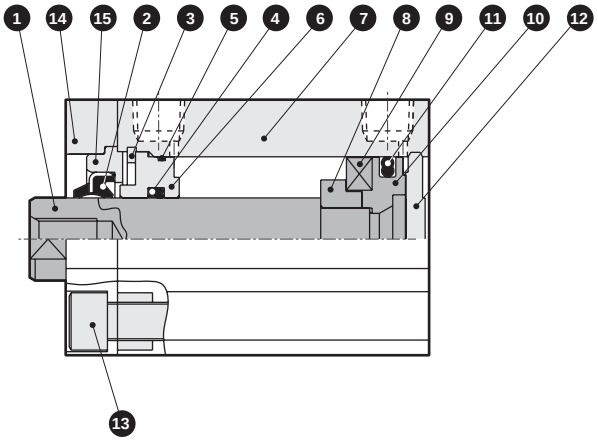

● SSD2-G-20, 25 (double acting/single rod/rubber scraper)

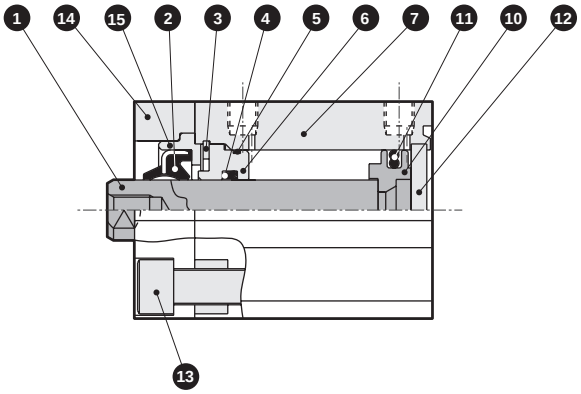

● SSD2-G-32 (double acting/single rod/rubber scraper)

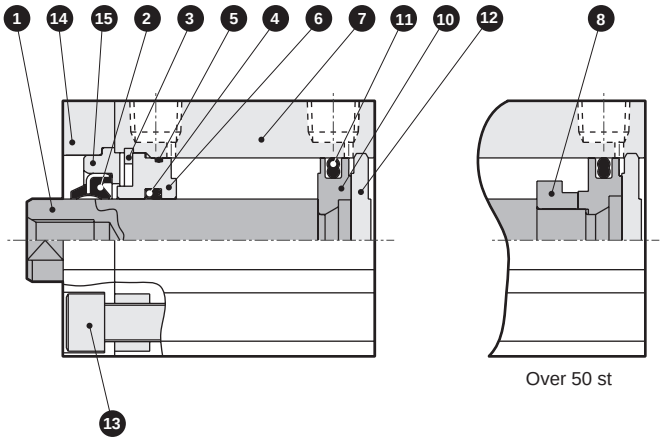

No.	Part name	Material	Remarks
1	Piston rod	ø20, ø25: Stainless steel ø32: Steel	Industrial chrome plating
2	Scraper	Nitrile rubber	
3	C-snap ring	Stainless steel	
4	Rod packing	Nitrile rubber	
5	Rod metal gasket	Nitrile rubber	
6	Rod metal	Special aluminum	Alumite
7	Body	Aluminum alloy	Hard alumite
8	Spacer	Aluminum alloy	Chromate

No.	Part name	Material	Remarks
9	Magnet	Plastic	
10	Piston	Aluminum alloy	Chromate
11	Piston packing	Nitrile rubber	
12	Cover	ø20 to ø25: Stainless steel ø32: Aluminum alloy	ø32: Alumite
13	Hexagon socket head cap screw	Stainless steel	
14	Adaptor (A)	Aluminum alloy	Alumite
15	Adaptor (B)	Aluminum alloy	Alumite

Repair parts list

Part name / Bore size (mm)	Kit No.	Repair parts No.
ø20	SSD2-G-20K	2 4 5 11
ø25	SSD2-G-25K	
ø32	SSD2-G-32K	

Internal structure and parts list

● SSD2-GL-40, 50 (double acting/single rod/rubber scraper/ with switch)

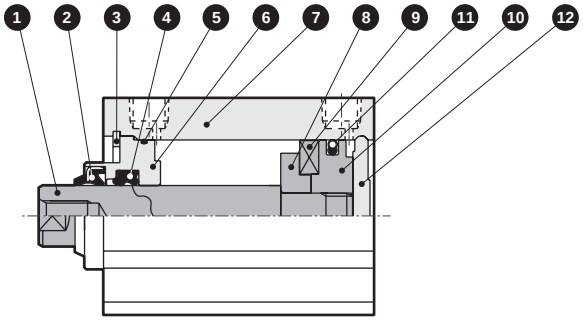

● SSD2-GL-63 to 100 (double acting/single rod/rubber scraper/ with switch)

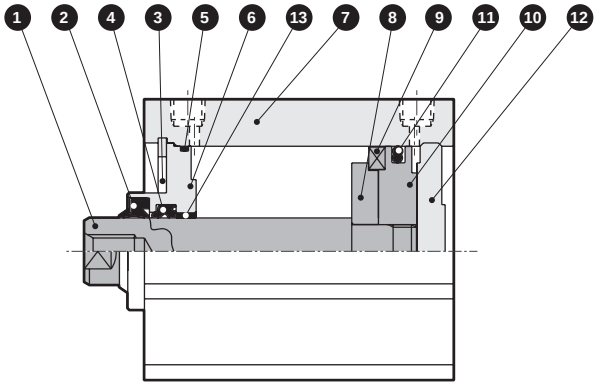

● SSD2-G-40, 50 (double acting/single rod/rubber scraper)

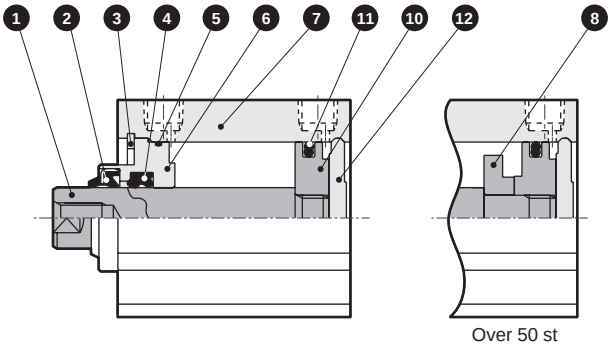

● SSD2-G-63 to 100 (double acting/single rod/rubber scraper)

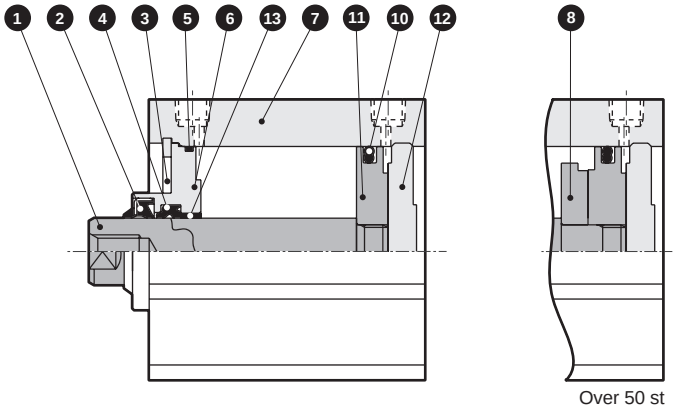

No.	Part name	Material	Remarks	No.	Part name	Material	Remarks
1	Piston rod	Steel	Industrial chrome plating	7	Body	Aluminum alloy	Hard alumite
2	Scraper	Nitrile rubber		8	Spacer	Aluminum alloy	Chromate
3	C-snap ring	Stainless steel		9	Magnet	Plastic	
4	Rod packing	Nitrile rubber		10	Piston	Aluminum alloy	Chromate
5	Rod metal gasket	Nitrile rubber		11	Piston packing	Nitrile rubber	
6	Rod metal	ø40, ø50: Special aluminum ø63 to ø100: Aluminum alloy	ø40, ø50: Alumite ø63 to ø100: Chromate	12	Cover	Aluminum alloy	Alumite
				13	Bush	Oiles drymet	ø63 to ø100 only

Repair parts list

Part name / Bore size (mm)	Kit No.	Repair parts No.
ø40	SSD2-G-40K	❷ ❹ ❺ ⓫
ø50	SSD2-G-50K	
ø63	SSD2-G-63K	
ø80	SSD2-G-80K	
ø100	SSD2-G-100K	

SCP*3
CMK2
CMA2
SCM
SCG
SCA2
SCS2
CKV2
CAV2/COVP/N2
SSD2
SSG
SSD
CAT
MDC2
MVC
SMG
MSD/MSDG
FC*
STK
SRL3
SRG3
SRM3
SRT3
MRL2
MRG2
SM-25
ShkAbs
FJ
FK
Spd Contr
Ending

dimensions

● SSD2-G(L)

ø20/ø25

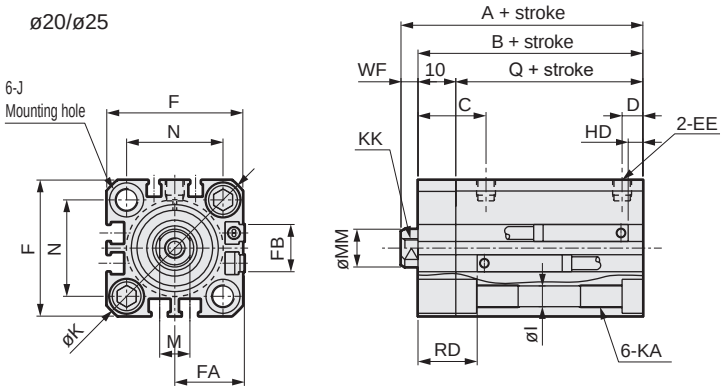

● Rod end male thread

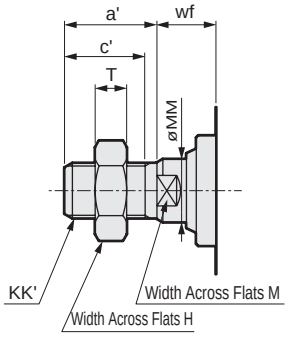

ø32

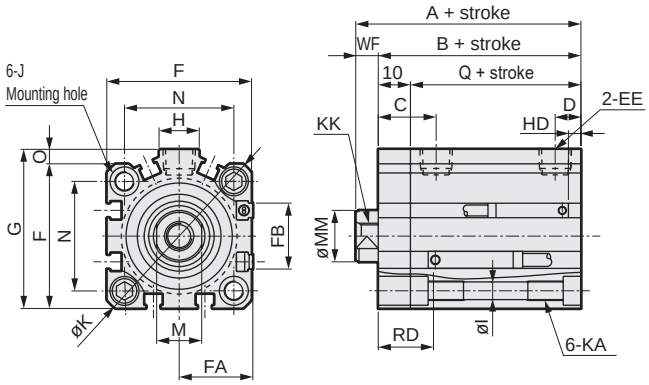

ø40 to ø100

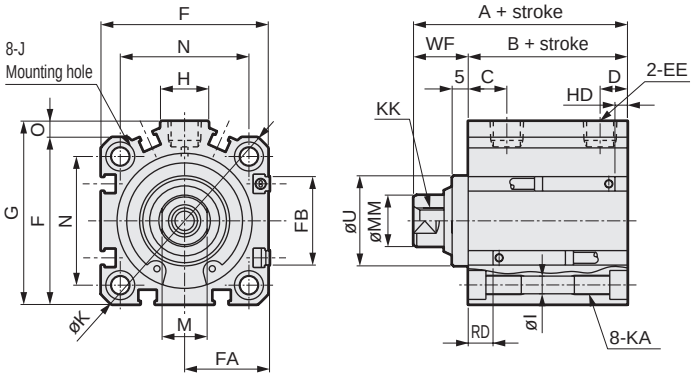

*1: To calculate A + stroke or B + stroke when using custom stroke, apply the next longer standard stroke (instead of the custom stroke) to the stroke value. (Example) If the custom stroke is 7 mm, apply the standard stroke of 10 mm.
*2: HD and RD dimensions for 5 mm stroke differ from these dimensions according to the setting.
***3 :For Dimensions of individual accessoriesPages 1046 to 1049.**
*4: Dimensions in ( ) of codes A, B and Q are for strokes of more than 50 mm.
*5: The ø32 bore size with a 5 mm stroke and without a switch has a port size of M5.*6: Dimensions in ( ) of FA are for the L-shaped lead wire type.
*7: Dimensions in ( ) of code J are for the rod side mounting hole.

Code	Dimensions without switch			Common dimensions with switch															
Bore size (mm)	A *1 *4	B *1 *4	Q	A *1	B *1	Q	C	D	EE *5	F	FA *6	FB	G	H	I	J	K	KA	KK
ø20	34	29.5	19.5	44	39.5	29.5	18	5.5	M5	36	18.5 (22)	12.5	-	-	5.5	9 spot face depth 5.5(15.5)	47	M6 depth 11	M5 depth 7
ø25	37.5	32.5	22.5	47.5	42.5	32.5	21	6	M5	40	20.5 (24)	13.5	-	-	5.5	9 spot face depth 5.5(15.5)	51	M6 depth 11	M6 depth 12
ø32	40 (50)	33 (43)	23 (33)	50	43	33	18	8	Rc1/8	45	23 (26.5)	20.5	49.5	12.5	5.5	9 spot face depth 5.5(15.5)	60	M6 depth 11	M8 depth 13
ø40	46.5 (56.5)	29.5 (39.5)	-	56.5	39.5	-	12	8.5	Rc1/8	52	26.5 (30)	27.5	57	15	5.5	9 spot face depth 5.5	69	M6 depth 11	M8 depth 13
ø50	48.5 (58.5)	30.5 (40.5)	-	58.5	40.5	-	10.5	10.5	Rc1/4	64	32.5 (36)	28.5	71	18	6.9	11 spot face depth 6.5	86	M8 depth 13	M10 depth 15
ø63	54 (64)	36 (46)	-	64	46	-	13	11	Rc1/4	77	39 (42.5)	28.5	84	23	8.7	14 spot face depth 9	103	M10 depth 25	M10 depth 15
ø80	63.5 (73.5)	43.5 (53.5)	-	73.5	53.5	-	16	13	Rc3/8	98	49.5 (53)	28.5	104	31	10.5	17.5 spot face depth 11	132	M12 depth 28	M16 depth 21
ø100	75 (85)	53 (63)	-	85	63	-	23	15	Rc3/8	117	59 (62.5)	28.5	123.5	38	10.5	17.5 spot face depth 11	156	M12 depth 28	M20 depth 27

Code	Common dimensions with switch						Reed T0H/T0V, T5H/T5V		Proximity T2H/T2V, T3H/T3V		Proximity T2WH/T2WV, T3WH/T3WV		Proximity F2H/F2V, F3H/F3V F2YH/F2YV F3YH/F3YV		Proximity F2S/F3S		Dimensions of rod end male thread part							
Bore size (mm)	M	MM	N	O	U	WF	HD	RD	HD	RD	HD	RD	HD	RD	HD	RD	a'	c'	H	KK'	M	MM	T	wf
ø20	8	10	25.5	-	-	4.5	3	17.5	3	17.5	5	19.5	7.5	22	6.5	21	14	12	13	M8	8	10	5	4.5
ø25	10	12	28	-	-	5	4	19.5	4	19.5	6	21.5	8.5	24	7.5	23	17.5	15	17	M 10 x 1.25	10	12	6	5
ø32	14	16	34	4.5	-	7	4	19.5	4	19.5	6	21.5					23.5	20.5	22	M 14 x 1.5	14	16	8	5
ø40	14	16	40	5	28	17	7	12	7	12	8.5	13.5					23.5	20.5	22	M 14 x 1.5	14	16	8	15
ø50	17	20	50	7	35	18	7.5	12.5	7.5	12.5	9	14					28.5	26	27	M 18 x 1.5	17	20	11	15
ø63	17	20	60	7	35	18	12.5	13	12.5	13	14	14.5					28.5	26	27	M 18 x 1.5	17	20	1	15
ø80	22	25	77	6	43	20	17.5	15.5	17.5	15.5	19	17					35.5	32.5	32	M 22 x 1.5	22	25	13	18
ø100	27	30	94	6.5	59	22	23	19.5	23	19.5	24.5	21					35.5	32.5	41	M 26 x 1.5	27	30	16	18

MEMO

SCP*3
CMK2
CMA2
SCM
SCG
SCA2
SCS2
CKV2
CAV2/COVP/N2
SSD2
SSG
SSD
CAT
MDC2
MVC
SMG
MSD/MSDG
FC*
STK
SRL3
SRG3
SRM3
SRT3
MRL2
MRG2
SM-25
ShkAbs
FJ
FK
Spd Contr
Ending

Dimensions with mounting bracket

● Clevis bracket (CB)
SSD2-G(L)-20 to 100 -CB

• ø20/ø25

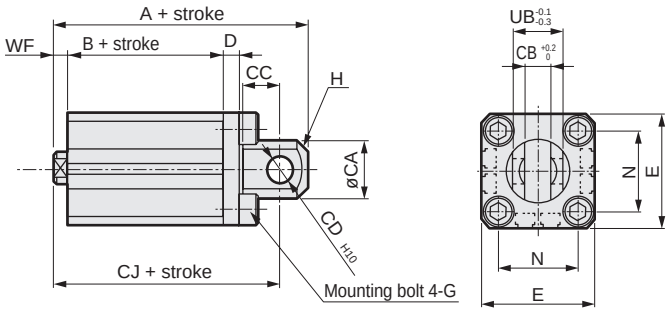

• ø32 to ø100

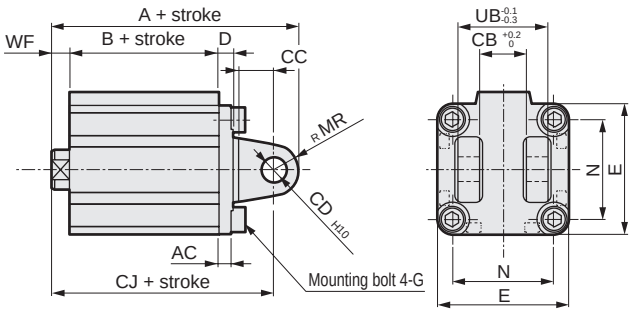

Rod end male thread

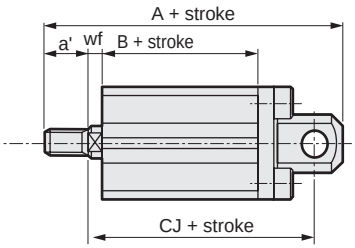

Rod end male thread

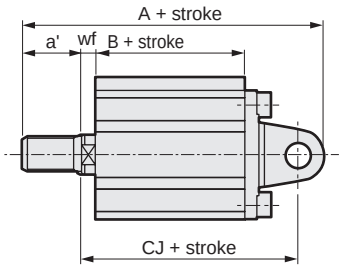

Code	Common dimensions										
Bore size(mm)	AC	CA	CB	CC	CD	D	E	G	MR	N	UB
ø20	-	20	8.2	12	8	5	36	M 6 x 16	-	25.5	16
ø25	-	24	10.2	14	10	5	40	M 6 x 16	-	28	20
ø32	4.5	-	18.2	14	10	5	45	M 6 x 16	10	34	36
ø40	5	-	18.2	14	10	6	52	M 6 x 16	10	40	36
ø50	6	-	22.2	20	14	7	64	M 8 x 20	14	50	44
ø63	7	-	22.2	20	14	8	77	M 10 x 25	14	60	44
ø80	9	-	28.2	27	18	10	98	M 12 x 40	18	77	56
ø100	12	-	32.2	31	22	13	117	M 12 x 40	22	94	64

Code	Female thread							Male thread							
Bore size(mm)	WF	No switch			With switch			a'	wf	No switch			With switch		
		A	B	CJ	A	B	CJ			A	B	CJ	A	B	CJ
ø20	4.5	61	29.5	52	71	39.5	62	14	4.5	75	29.5	52	85	39.5	62
ø25	5	67.5	32.5	57.5	77.5	42.5	67.5	17.5	5	85	32.5	57.5	95	42.5	67.5
ø32	7	70	33	60	80	43	70	23.5	5	91.5	33	58	101.5	43	68
ø40	17	78.5	29.5	68.5	88.5	39.5	78.5	23.5	15	100	29.5	66.5	110	39.5	76.5
ø50	18	90.5	30.5	76.5	100.5	40.5	86.5	28.5	15	116	30.5	73.5	126	40.5	83.5
ø63	18	98	36	84	108	46	94	28.5	15	123.5	36	81	133.5	46	91
ø80	20	119.5	43.5	101.5	129.5	53.5	111.5	35.5	18	153	43.5	99.5	163	53.5	109.5
ø100	22	142	53	120	152	63	130	35.5	18	173.5	53	116	183.5	63	126

Dimensions with mounting bracket

● Head side flange (FB)
SSD2-G(L)-20 to 100 -FB

· ø20/ø25

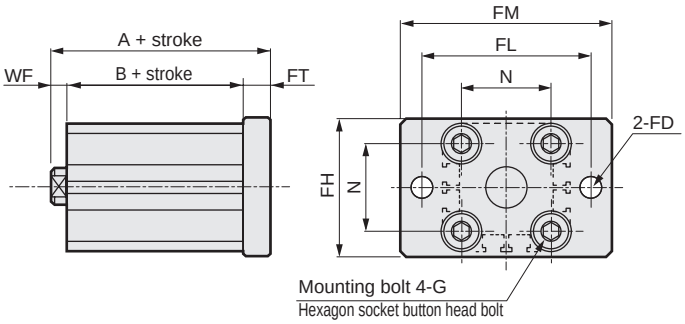

· ø32 to ø100

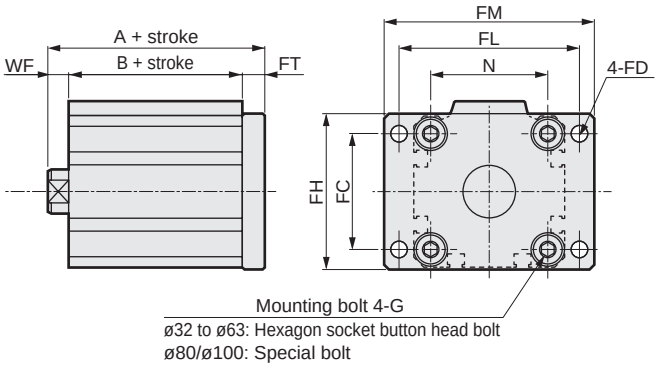

Rod end male thread

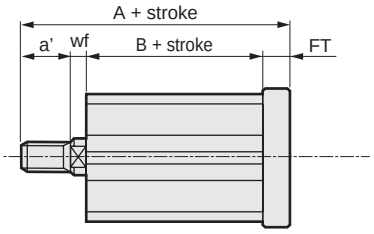

Rod end male thread

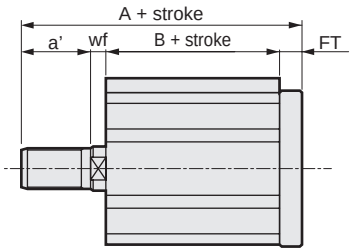

Code	Common dimensions								Female thread					Male thread					
Bore size (mm)	FC	FD	FH	FL	FM	FT	N	G	WF	No switch		With switch		a'	wf	No switch		With switch	
										A	B	A	B			A	B	A	B
ø20	-	6.6	39	48	60	8	25.5	M6x16	4.5	42	29.5	52	39.5	14	4.5	56	29.5	66	39.5
ø25	-	6.6	42	52	64	8	28	M6x16	5	45.5	32.5	55.5	42.5	17.5	5	63	32.5	73	42.5
ø32	34	5.5	48	56	65	8	34	M6x16	7	48	33	58	43	23.5	5	69.5	33	79.5	43
ø40	40	5.5	54	62	72	8	40	M6x16	17	54.5	29.5	64.5	39.5	23.5	15	76	29.5	86	39.5
ø50	50	6.6	67	76	89	9	50	M8x20	18	57.5	30.5	67.5	40.5	28.5	15	83	30.5	93	40.5
ø63	60	9	80	92	108	9	60	M10x25	18	63	36	73	46	28.5	15	88.5	36	98.5	46
ø80	77	11	99	116	134	11	77	M12x40	20	74.5	43.5	84.5	53.5	35.5	18	108	43.5	118	53.5
ø100	94	11	117	136	154	11	94	M12x40	22	86	53	96	63	35.5	18	117.5	53	127.5	63

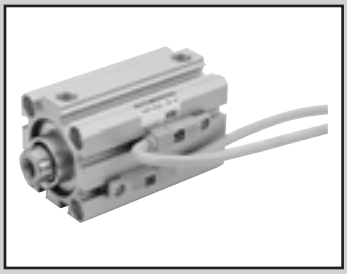

Compact cylinder Double acting/coolant proof

SSD2-G2/G3 Series

● Bore size: ø16/ø20/ø25/ø32/ø40/ø50/ø63/ø80/ø100

JIS symbol 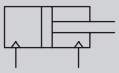

RoHS

Specifications

Item	SSD2-G2/G3 SSD2-G2L/G3L (with switch)								
Bore size mm	ø16	ø20	ø25	ø32	ø40	ø50	ø63	ø80	ø100
Actuation	Double acting								
Working fluid	Compressed air								
Max. working pressure MPa	1.0								
Min. working pressure MPa	0.15						0.1		
Proof pressure MPa	1.6								
Ambient temperature °C	-10 to 60 (no freezing)								
Port size	M5			Rc1/8 (*1)		Rc1/4		Rc3/8	
Stroke tolerance mm	$^{+1.0}_{0}$								
Working piston speed mm/s	50 to 500						50 to 300		
Cushion	No								
Lubrication	Not required (use turbine oil class 1 ISO VG32 if lubrication is necessary)								
Allowable absorbed energy J	0.01	0.016	0.021	0.025	0.092	0.1	0.12	0.27	0.56

*1: The ø32 bore size with a 5 mm stroke and without a switch has a port size of M5.

Stroke

Bore size (mm)	Standard stroke (mm)	Max. stroke (mm)	Min. stroke (mm)
ø16	5/10/15/20/25/30	30	1 (10) The value in ( ) is for types with one or two switches.
ø20	5/10/15/20/25/30/35/40/45/50	50	
ø25			
ø32	5/10/15/20/25/30/35/40/45/50/75/100	100	
ø40			
ø50	10/15/20/25/30/35/40/45/50/75/100	100	
ø63			
ø80			
ø100			

Custom stroke

● SSD2-G2/G3 Series

Item	Standard product Standard stroke body with spacer	
Model No.	Refer to How to order.	
Product Descriptions	A spacer is added to the standard stroke body to adjust the stroke in 1 mm increments.	
Stroke range	Bore size	Stroke range
	16	1 to 29
	20 to 25	1 to 49
	32 to 100	1 to 99
Example of model No.	Model No.: SSD2-G2-32-38 A +2 mm spacer is added to the SSD2-G2-32-40 standard cylinder to create 38mm stroke.B + stroke is 73 mm.	

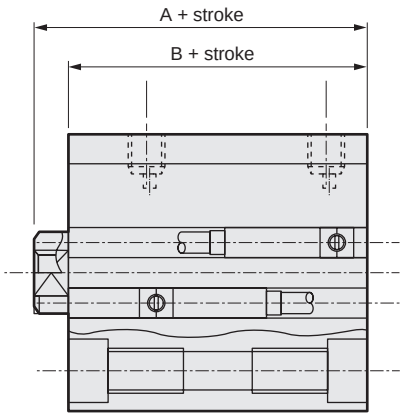

Switch specifications

● Proximity switch

Model No.	Proximity/2-wire	Proximity/3-wire
Item	T2YLH/T2YLV	T3YLH/T3YLV
Applications	Dedicated for programmable controller	Programmable controller, relay
Power supply voltage	-	10 to 28 VDC
Load voltage/current	10 to 30 VDC, 5 to 20 mA *1	30 VDC or less, 50 mA or less
Indicator	Red/green LED (Lit when ON)	
Leakage current	1 mA or less	10 μA or less
Max. shock resistance	980 m/S^2	
Weight g	1 m:33 3 m:87 5 m:142	

*1 : The above max. load current is 20 mA at 25°C. The current is lower than 20 mA if the operating ambient temperature around the switch is higher than 25˚C. (5 to 10 mA at 60˚C)

*2 : Refer to Ending Page 1 for other switch specifications.

Cylinder weight table (the weight of the switches is when there are 2 cylinder switches.)

(Unit: g)

Stroke (mm)	5		10		15		20		25		30		35		40		45		50		75		100	
Bore size (mm)	No switch	Switch	No switch	Switch	No switch	Switch	No switch	Switch	No switch	Switch	No switch	Switch	No switch	Switch	No switch	Switch	No switch	Switch	No switch	Switch	No switch	Switch	No switch	Switch
ø16	62	118	73	118	83	158	94	139	105	150	116	161	-	-	-	-	-	-	-	-	-	-	-	-
ø20	108	163	120	195	133	208	146	221	158	233	171	246	184	259	197	272	210	285	223	298	-	-	-	-
ø25	151	242	166	257	182	273	198	289	214	305	229	320	245	336	261	352	293	384	292	383	-	-	-	-
ø32	230	344	252	366	274	388	296	410	317	431	339	453	361	475	383	497	427	519	426	540	487	648	707	755
ø40	301	444	328	471	354	497	381	524	408	551	434	577	461	604	487	630	540	657	540	683	625	816	890	948
ø50	-	-	513	707	555	749	597	791	639	833	682	876	734	918	766	960	890	1002	850	1044	787	1254	1307	1464
ø63	-	-	733	1012	788	1067	843	1122	898	1177	953	1232	1009	1288	1064	1343	1175	1398	1174	1453	1384	1728	1939	2003
ø80	-	-	1532	1945	1619	2032	1705	2118	1792	2203	1878	2288	1965	2377	2052	2465	2226	2552	2225	2638	2564	3071	3434	3503
ø100	-	-	2212	2779	2326	2893	2439	3006	2553	3120	2667	3234	2781	3348	2894	3461	3121	3575	3122	3689	3622	4259	4757	4829

Theoretical thrust table

(Unit: N)

Bore size (mm)	Operating direction	Working pressure MPa										
		0.1	0.15	0.2	0.3	0.4	0.5	0.6	0.7	0.8	0.9	1.0
ø16	Push	-	30.2	40.2	60.3	80.4	1.01×10^2	1.21×10^2	1.41×10^2	1.61×10^2	1.81×10^2	2.01×10^2
	Pull	-	22.6	30.2	45.2	60.3	75.4	90.5	1.06×10^2	1.21×10^2	1.36×10^2	1.51×10^2
ø20	Push	-	47.1	62.8	94.2	1.26×10^2	1.57×10^2	1.88×10^2	2.20×10^2	2.51×10^2	2.83×10^2	3.14×10^2
	Pull	-	35.3	47.1	70.7	94.2	1.18×10^2	1.41×10^2	1.65×10^2	1.88×10^2	2.12×10^2	2.36×10^2
ø25	Push	-	73.6	98.2	1.47×10^2	1.96×10^2	2.45×10^2	2.95×10^2	3.44×10^2	3.93×10^2	4.42×10^2	4.91×10^2
	Pull	-	56.7	75.6	1.13×10^2	1.51×10^2	1.89×10^2	2.27×10^2	2.64×10^2	3.02×10^2	3.40×10^2	3.78×10^2
ø32	Push	-	1.21×10^2	1.61×10^2	2.41×10^2	3.22×10^2	4.02×10^2	4.83×10^2	5.63×10^2	6.43×10^2	7.24×10^2	8.04×10^2
	Pull	-	90.5	1.21×10^2	1.81×10^2	2.41×10^2	3.02×10^2	3.62×10^2	4.22×10^2	4.83×10^2	5.43×10^2	6.03×10^2
ø40	Push	-	1.88×10^2	2.51×10^2	3.77×10^2	5.03×10^2	6.28×10^2	7.54×10^2	8.80×10^2	1.01×10^3	1.13×10^3	1.26×10^3
	Pull	-	1.58×10^2	2.11×10^2	3.17×10^2	4.22×10^2	5.28×10^2	6.33×10^2	7.39×10^2	8.44×10^2	9.50×10^2	1.06×10^3
ø50	Push	-	2.95×10^2	3.93×10^2	5.89×10^2	7.85×10^2	9.82×10^2	1.18×10^3	1.37×10^3	1.57×10^3	1.77×10^3	1.96×10^3
	Pull	-	2.47×10^2	3.30×10^2	4.95×10^2	6.60×10^2	8.25×10^2	9.90×10^2	1.15×10^3	1.32×10^3	1.48×10^3	1.65×10^3
ø63	Push	3.12×10^2	4.68×10^2	6.23×10^2	9.35×10^2	1.25×10^3	1.56×10^3	1.87×10^3	2.18×10^3	2.49×10^3	2.81×10^3	3.12×10^3
	Pull	2.80×10^2	4.20×10^2	5.61×10^2	8.41×10^2	1.12×10^3	1.40×10^3	1.68×10^3	1.96×10^3	2.24×10^3	2.52×10^3	2.80×10^3
ø80	Push	5.03×10^2	7.54×10^2	1.01×10^3	1.51×10^3	2.01×10^3	2.51×10^3	3.02×10^3	3.52×10^3	4.02×10^3	4.52×10^3	5.03×10^3
	Pull	4.54×10^2	6.80×10^2	9.07×10^2	1.36×10^3	1.81×10^3	2.27×10^3	2.72×10^3	3.17×10^3	3.63×10^3	4.08×10^3	4.54×10^3
ø100	Push	7.85×10^2	1.18×10^3	1.57×10^3	2.36×10^3	3.14×10^3	3.93×10^3	4.71×10^3	5.50×10^3	6.28×10^3	7.07×10^3	7.85×10^3
	Pull	7.15×10^2	1.07×10^3	1.43×10^3	2.14×10^3	2.86×10^3	3.57×10^3	4.29×10^3	5.00×10^3	5.72×10^3	6.43×10^3	7.15×10^3

How to order

No switch (without magnet for switch)

SSD2 - G2 - 20 - ◯ - 30 ——— N - LB - I

With switch (built-in magnet for switch)

SSD2 - G2L - 20 - ◯ - 30 - T2YLH - R - N - LB - I

- Ⓐ Degree of protection level
- Ⓑ Bore size
- Ⓒ Port thread
- Ⓓ Stroke
- Ⓔ Switch model No. *1 *6
- Ⓕ Switch quantity
- Ⓖ Option
- Ⓗ Mounting bracket *2 *3
- Ⓘ Accessory *4

Code	Description
Ⓐ Degree of protection level	
G2	Coolant proof scraper + packing NBR
G3	Coolant proof scraper + packing FKM
G2L	Coolant proof scraper + packing NBR, with switch
G3L	Coolant proof scraper + packing FKM, with switch
Ⓑ Bore size (mm)	
16	ø16
20	ø20
25	ø25
32	ø32
40	ø40
50	ø50
63	ø63
80	ø80
100	ø100
Ⓒ Port thread	
Blank	Rc thread
NN	NPT thread (ø32 and over) (made-to-order product)
GN	G thread (ø32 and over) (made-to-order product)
Ⓓ Stroke (mm)	
Refer to the stroke table on the following page.	

Ⓔ Switch model No.

Lead wire Straight	Lead wire L-shaped	Contact	Voltage	Indicator	Lead wire
T2YLH*	T2YLV*	Proximity	DC	2-color LED	2-wire
T3YLH*	T3YLV*				3-wire

*** Lead wire length**	
Blank	1 m (standard)
3	3 m (option)
5	5 m (option)
Ⓕ Switch quantity	
R	1 on rod side
H	1 on head side
D	2
Ⓖ Option	
Blank	Rod end female thread
N	Rod end male thread
Ⓗ Mounting bracket	
Blank	Without mounting bracket
LB	Axial foot (made-to-order product)
CB	Clevis bracket (pin and snap ring included)
FA	Rod side flange (made-to-order product)
FB	Head side flange
Ⓘ Accessory (available when rod end male thread "N" is selected)	
I	Rod eye
Y	Rod clevis (pin and snap ring included)

⚠ Precautions for model No. selection

*1 : The F-switch can only be mounted on the piping port surface of bore sizes ø20 and ø25.
*2 : The mounting bracket is included at shipment.
*3 : The structure of bore sizes ø16 to ø32 does not permit retrofitting of the foot bracket (LB) or flange bracket (FA) on the rod side. Assembly before shipment is available as made to order.
*4 : "I" and "Y" cannot be selected together.
*5 : Refer to pages 750 and 751 for combinations of variations/options.
*6 : Switches are shipped with the product. Contact CKD if assembling before shipment is necessary.

[Example of model No.]

SSD2-G2L-32-30-T2YLH-R-N

Model: Compact cylinder

Ⓐ Degree of protection level	: Coolant proof scraper + packing NBR, with switch
Ⓑ Bore size	: ø32 mm
Ⓒ Port thread	: Rc thread
Ⓓ Stroke	: 30 mm
Ⓔ Switch model No.	: Proximity switch T2YLH, lead wire 1 m
Ⓕ Switch quantity	: 1 on rod side
Ⓖ Option	: Rod end male thread
Ⓗ Mounting bracket	: Axial foot

[Stroke table]

Stroke (mm)		Applicable bore size								
		16	20	25	32	40	50	63	80	100
Standard stroke	5	●	●	●	●	●				
	10	●	●	●	●	●	●	●	●	●
	15	●	●	●	●	●	●	●	●	●
	20	●	●	●	●	●	●	●	●	●
	25	●	●	●	●	●	●	●	●	●
	30	●	●	●	●	●	●	●	●	●
	35		●	●	●	●	●	●	●	●
	40		●	●	●	●	●	●	●	●
	45		●	●	●	●	●	●	●	●
	50		●	●	●	●	●	●	●	●
	75				●	●	●	●	●	●
	100				●	●	●	●	●	●
Min. stroke (mm) *1		1								
Max. stroke (mm)		30	50		100					
Custom stroke *2										

*1 : Less than 10 mm stroke is not available.
Refer to page 946 for the min. stroke with switch.
*2 : The total length when using a custom stroke is the same as that when using the next longer standard stroke.

How to order switch

SW - T2YLH

Switch model No.
(Item Ⓔ on page 948)

How to order mounting bracket

Bore size (mm) / Mounting bracket	ø16	ø20	ø25	ø32	ø40	ø50	ø63
Foot (LB)					SSD2-LB-40	SSD2-LB-50	SSD2-LB-63
Flange (FA/FB)					SSD2-FA-40	SSD2-FA-50	SSD2-FA-63
Clevis bracket (CB)	SSD2-CB-16	SSD2-CB-20	SSD2-CB-25	SSD2-CB-32	SSD2-CB-40	SSD2-CB-50	SSD2-CB-63

Bore size (mm) / Mounting bracket	ø80	ø100
Foot (LB)	SSD2-LB-80	SSD2-LB-100
Flange (FA/FB)	SSD2-FA-80	SSD2-FA-100
Clevis bracket (CB)	SSD2-CB-80	SSD2-CB-100

*1: The foot mounting bracket is provided as 2 pcs./set.
*2: The structure of bore sizes ø16 to ø32 does not permit retrofitting of the foot bracket (LB) or flange bracket (FA) on the rod side. Contact CKD for details.

Internal structure and parts list

● Degree of protection: Packing NBR SSD2-G2/G2L
Packing FKM SSD2-G3/G3L

● SSD2-G$^{2}_{3}$-16 (without switch)

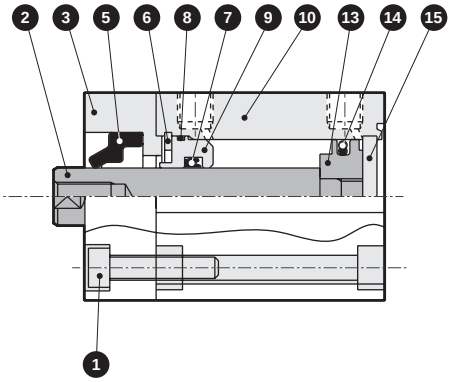

● SSD2-G$^{2}_{3}$L-16 (with switch)

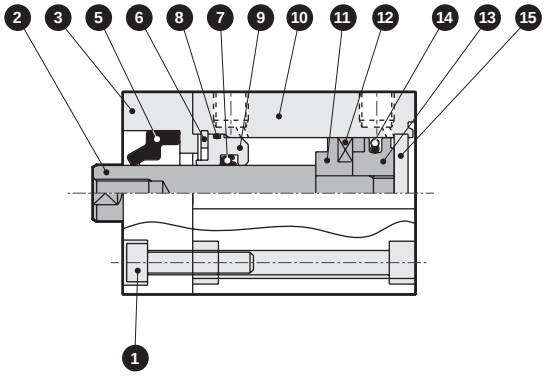

● SSD2-G$^{2}_{3}$-20, 25 (without switch)

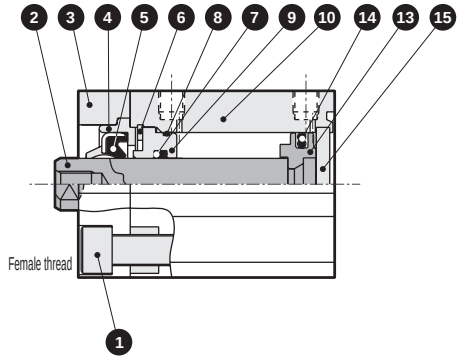

● SSD2-G$^{2}_{3}$L-20, 25 (with switch)

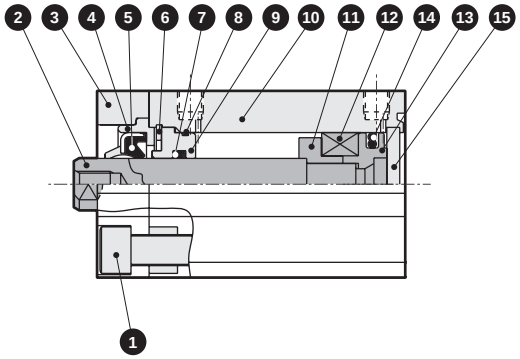

● SSD2-G$^{2}_{3}$-32 (without switch)

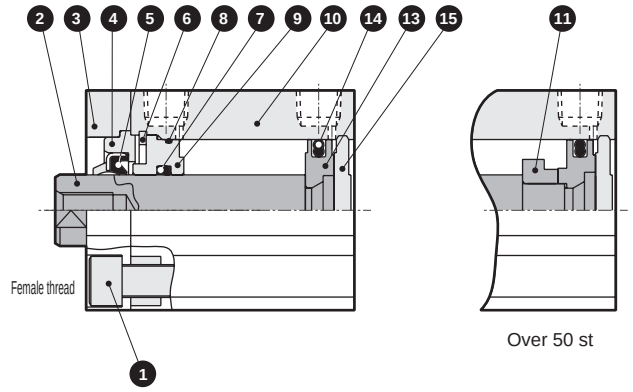

● SSD2-G$^{2}_{3}$L-32 (with switch)

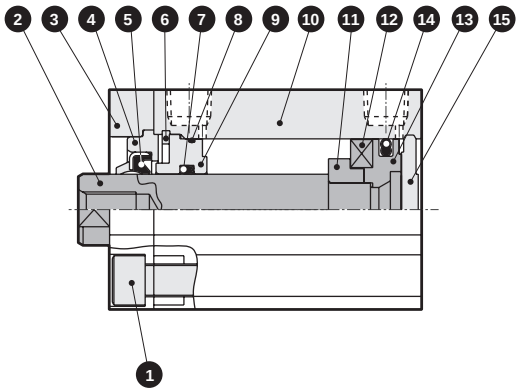

● SSD2-G$^{2}_{3}$-40, 50 (without switch)

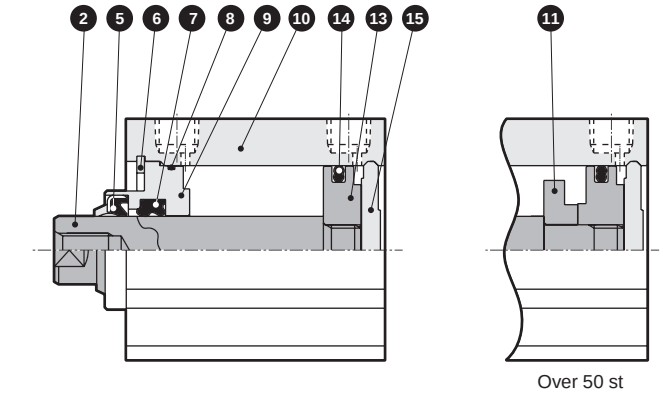

● SSD2-G$^{2}_{3}$L-40, 50 (with switch)

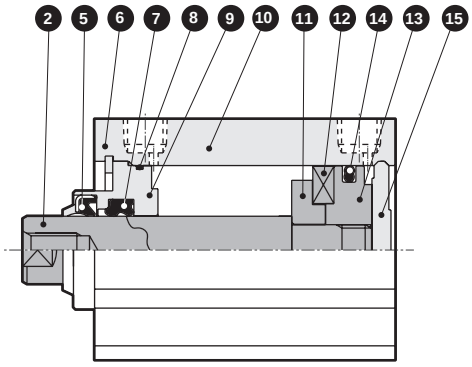

Internal structure and parts list

● Degree of protection: Packing NBR SSD2-G2/G2L
Packing FKM SSD2-G3/G3L

● SSD2-G$^{2}_{3}$-63 to 100 (without switch)

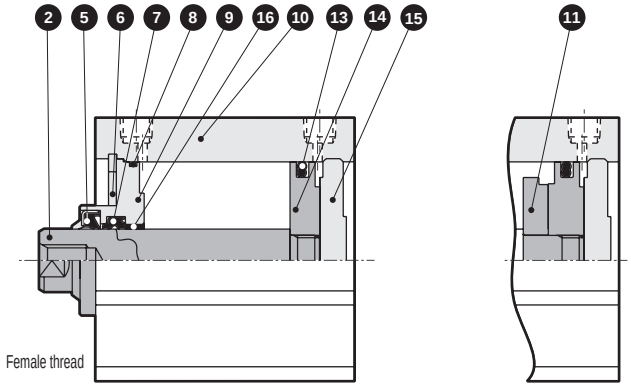

● SSD2-G$^{2}_{3}$L-63 to 100 (with switch)

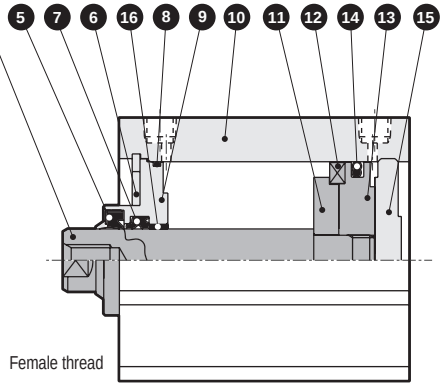

Main parts list

No.	Part name		Material	Remarks
1	Hexagon socket head cap screw		Stainless steel	ø16 to ø32 only
2	Piston rod		Stainless steel	Industrial chrome plating
3	Adaptor (A)		Aluminum alloy	Alumite: ø16 to ø32 only
4	Adaptor (B)		Aluminum alloy	Alumite: ø16 to ø32 only
5	Scraper	G2	Nitrile rubber	
		G3	Fluoro rubber	
6	C-snap ring		Stainless steel	
7	Rod packing	G2	Nitrile rubber	
		G3	Fluoro rubber	
8	Rod metal gasket	G2	Nitrile rubber	
		G3	Fluoro rubber	

No.	Part name		Material	Remarks
9	Rod metal		ø16 to ø50: Special aluminum ø63 to ø100: Aluminum alloy	ø16 to ø50: Alumite ø63 to ø100: Chromate
10	Body		Aluminum alloy	Hard alumite
11	Spacer		Aluminum alloy	Chromate
12	Magnet		Plastic	
13	Piston		Aluminum alloy	Chromate
14	Piston packing	G2	Nitrile rubber	
		G3	Fluoro rubber	
15	Cover		ø16 to ø25: Stainless steel ø32 to ø100: Aluminum alloy	Alumite: ø32 to ø100
16	Bush		Oiles drymet	ø63 to ø100 only

Repair parts list

Part name / Bore size (mm)	Kit No.	Repair parts No.
ø16	SSD2-G2-16K	5 7 8 14
	SSD2-G3-16K	
ø20	SSD2-G2-20K	
	SSD2-G3-20K	
ø25	SSD2-G2-25K	
	SSD2-G3-25K	
ø32	SSD2-G2-32K	
	SSD2-G3-32K	
ø40	SSD2-G2-40K	
	SSD2-G3-40K	
ø50	SSD2-G2-50K	
	SSD2-G3-50K	
ø63	SSD2-G2-63K	
	SSD2-G3-63K	
ø80	SSD2-G2-80K	
	SSD2-G3-80K	
ø100	SSD2-G2-100K	
	SSD2-G3-100K	

Note: Specify the kit No. when placing an order.

SCP*3
CMK2
CMA2
SCM
SCG
SCA2
SCS2
CKV2
CAV2/COVP/N2
SSD2
SSG
SSD
CAT
MDC2
MVC
SMG
MSD/MSDG
FC*
STK
SRL3
SRG3
SRM3
SRT3
MRL2
MRG2
SM-25
ShkAbs
FJ
FK
Spd Contr
Ending

dimensions

- Degree of protection: Packing NBR
  SSD2-G2/G2L
- Degree of protection: Packing FKM
  SSD2-G3/G3L

● Rod end male thread

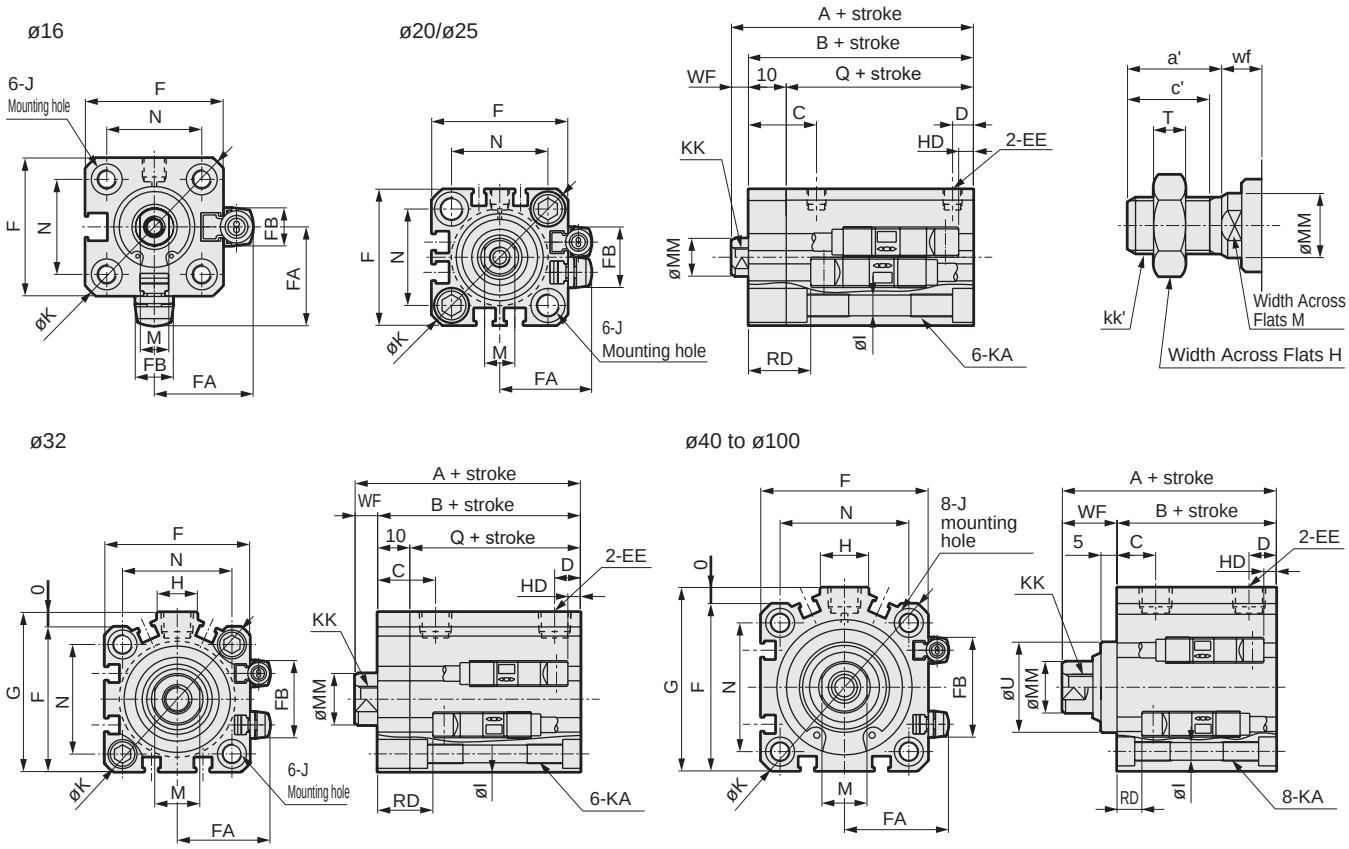

*1: To calculate A + stroke or B + stroke when using custom stroke, apply the next longer standard stroke (instead of the custom stroke) to the stroke value. (Example) If the custom stroke is 7 mm, apply the standard stroke of 10 mm.
*2: HD and RD dimensions for 5 mm stroke differ from these dimensions according to the setting.
***3: For dimensions of individual accessories, refer to pages 1046 to 1049.**
*4: Dimensions in ( ) of codes A, B and Q are for strokes of more than 50 mm.
*5: The ø32 bore size with a 5 mm stroke and without a switch has a port size of M5.*6: Dimensions in ( ) of code J are for the spot face of rod side mounting hole.

Code	Dimensions without switch			Common dimensions with switch															
Bore size (mm)	A *1 *4	B *1 *4	Q	A *1	B *1	Q	C	D	EE *5	F	FA	FB	G	H	I	J	K	KA	KK
ø16	35.5	27	17	40.5	32	22	15.5	5.5	M5	29	20.5	8	-	-	3.5	6.5 spot face depth 3.5(13.4)	38	M4 depth 7	M4 depth 8
ø20	39	29.5	19.5	49	39.5	29.5	18	5.5	M5	36	24.5	16	-	-	5.5	9 spot face depth 5.5(15.5)	47	M6 depth 11	M5 depth 7
ø25	42.5	32.5	22.5	52.5	42.5	32.5	21	6	M5	40	26.5	17	-	-	5.5	9 spot face depth 5.5(15.5)	51	M6 depth 11	M6 depth 12
ø32	45 (55)	33 (43)	23 (33)	55	43	33	18	8	Rc1/8	45	29	24	49.5	12.5	5.5	9 spot face depth 5.5(15.5)	60	M6 depth 11	M8 depth 13
ø40	46.5 (56.5)	29.5 (39.5)	-	56.5	39.5	-	12	8.5	Rc1/8	52	32.5	31	57	15	5.5	9 spot face depth 5.5	69	M6 depth 11	M8 depth 13
ø50	48.5 (58.5)	30.5 (40.5)	-	58.5	40.5	-	10.5	10.5	Rc1/4	64	38.5	32	71	18	6.9	11 spot face depth 6.5	86	M8 depth 13	M10 depth 15
ø63	54 (64)	36 (46)	-	64	46	-	13	11	Rc1/4	77	45	32	84	23	8.7	14 spot face depth 9	103	M10 depth 25	M10 depth 15
ø80	63.5 (73.5)	43.5 (53.5)	-	73.5	53.5	-	16	13	Rc3/8	98	55.5	32	104	31	10.5	17.5 spot face depth 11	132	M12 depth 28	M16 depth 21
ø100	75 (85)	53 (63)	-	85	63	-	23	15	Rc3/8	117	65	32	123.5	38	10.5	17.5 spot face depth 11	156	M12 depth 28	M20 depth 27

Code	Common dimensions with switch						Proximity T2YLH, T2YLV, T3YLH, T3YLV		Dimensions of rod end male thread part							
Bore size (mm)	M	MM	N	O	U	WF	RD	HD	a'	c'	H	KK'	M	MM	T	wf
ø16	6	8	20	-	-	8.5	1.5	0	12	10	10	M6	6	8	3.6	8.5
ø20	8	10	25.5	-	-	9.5	16.5	2	14	12	13	M8	8	10	5	9.5
ø25	10	12	28	-	-	10	18.5	3	17.5	15	17	M 10 x 1.25	10	12	6	10
ø32	14	16	34	4.5	-	12	19	3	23.5	20.5	22	M 14 x 1.5	14	16	8	10
ø40	14	16	40	5	28	17	12	6.5	23.5	20.5	22	M 14 x 1.5	14	16	8	15
ø50	17	20	50	7	35	18	12	7.5	28.5	26	27	M 18 x 1.5	17	20	11	15
ø63	17	20	60	7	35	18	12.5	12.5	28.5	26	27	M 18 x 1.5	17	20	11	15
ø80	22	25	77	6	43	20	15	17.5	35.5	32.5	32	M 22 x 1.5	22	25	13	18
ø100	27	30	94	6.5	59	22	19	23	35.5	32.5	41	M 26 x 1.5	27	30	16	18

MEMO

Dimensions with mounting bracket

● Clevis bracket (CB)
SSD2-G2(L)/G3(L)-16 to 100 -CB

• ø16 to ø25

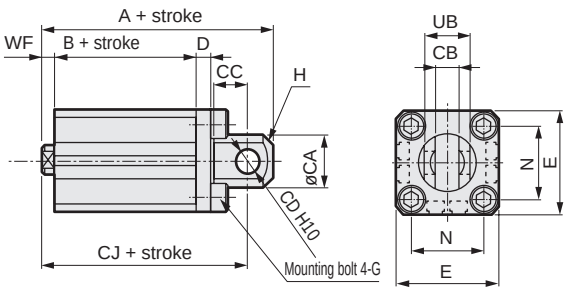

• ø32 to ø100

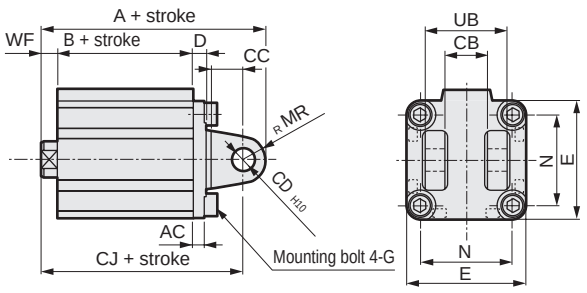

Rod end male thread

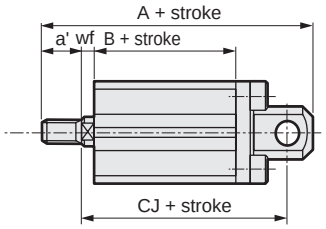

Rod end male thread

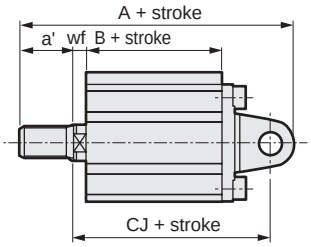

Code	Common dimensions											
Bore size(mm)	AC	CA	CB	CC	CD	D	E	G	H	MR	N	UB
ø16	-	15	$6.6^{+0.3\ 0}$	8	5	5	29	M 4 x 12	C2	-	20	12
ø20	-	20	$8.2^{+0.2\ 0}$	12	8	5	36	M 6 x 16	C4	-	25.5	16
ø25	-	24	$10.2^{+0.2\ 0}$	14	10	5	40	M 6 x 16	C5	-	28	20
ø32	4.5	-	$18.2^{+0.2\ 0}$	14	10	5	45	M 6 x 16	-	10	34	36
ø40	5	-	$18.2^{+0.2\ 0}$	14	10	6	52	M 6 x 16	-	10	40	36
ø50	6	-	$22.2^{+0.2\ 0}$	20	14	7	64	M 8 x 20	-	14	50	44
ø63	7	-	$22.2^{+0.2\ 0}$	20	14	8	77	M 10 x 25	-	14	60	44
ø80	9	-	$28.2^{+0.2\ 0}$	27	18	10	98	M 12 x 40	-	18	77	56
ø100	12	-	$32.2^{+0.2\ 0}$	31	22	13	117	M 12 x 40	-	22	94	64

Code	Female thread							Male thread							
Bore size(mm)	WF	No switch			With switch			a'	wf	No switch			With switch		
		A	B	CJ	A	B	CJ			A	B	CJ	A	B	CJ
ø16	8.5	56.5	27	50.5	61.5	32	55.5	12	8.5	68.5	27	50.5	73.5	32	55.5
ø20	9.5	66	29.5	57	76	39.5	67	14	9.5	80	29.5	57	90	39.5	67
ø25	10	72.5	32.5	62.5	82.5	42.5	72.5	17.5	10	90	32.5	62.5	100	42.5	72.5
ø32	12	75	33	65	85	43	75	23.5	10	96.5	33	63	106.5	43	73
ø40	17	78.5	29.5	68.5	88.5	39.5	78.5	23.5	15	100	29.5	66.5	110	39.5	76.5
ø50	18	90.5	30.5	76.5	100.5	40.5	86.5	28.5	15	116	30.5	73.5	126	40.5	83.5
ø63	18	98	36	84	108	46	94	28.5	15	123.5	36	81	133.5	46	91
ø80	20	119.5	43.5	101.5	129.5	53.5	111.5	35.5	18	153	43.5	99.5	163	53.5	109.5
ø100	22	142	53	120	152	63	130	35.5	18	173.5	53	116	183.5	63	126

Dimensions with mounting bracket

● Head side flange (FB)
SSD2-G2(L)/G3 (L)-20 to 100-FB

· ø16 to ø25

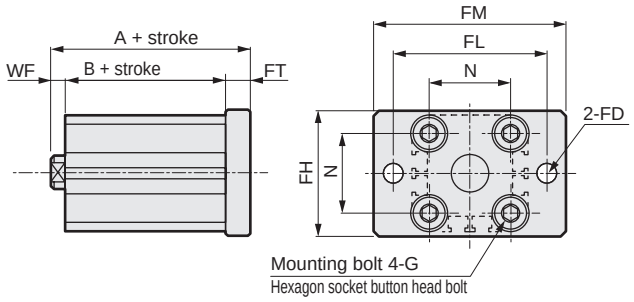

· ø32 to ø100

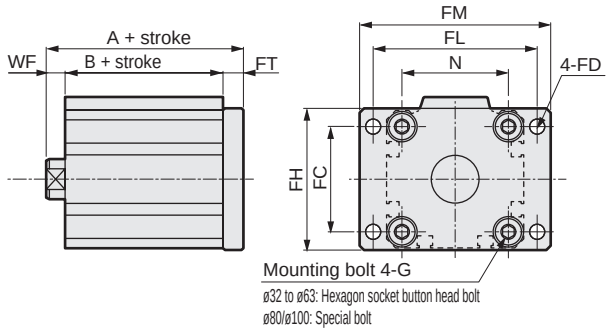

Rod end male thread

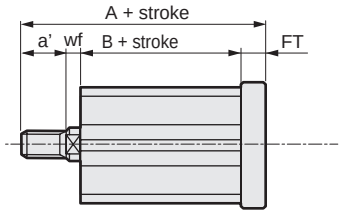

Rod end male thread

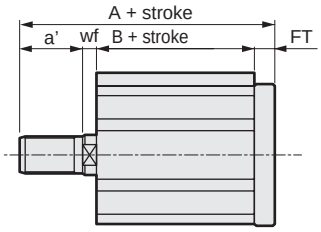

Code	Common dimensions								Female thread					Male thread					
Bore size (mm)	FC	FD	FH	FL	FM	FT	G	N	WF	No switch		With switch		a'	wf	No switch		With switch	
										A	B	A	B			A	B	A	B
ø16	-	4.5	30	45	55	5.5	M4x12	20	8.5	41	27	46	32	12	8.5	53	27	58	32
ø20	-	6.6	39	48	60	8	M6x16	25.5	9.5	47	29.5	57	39.5	14	9.5	61	29.5	71	39.5
ø25	-	6.6	42	52	64	8	M6x16	28	10	50.5	32.5	60.5	42.5	17.5	10	68	32.5	78	42.5
ø32	34	5.5	48	56	65	8	M6x16	34	12	53	33	63	43	23.5	10	74.5	33	84.5	43
ø40	40	5.5	54	62	72	8	M6x16	40	17	54.5	29.5	64.5	39.5	23.5	15	76	29.5	86	39.5
ø50	50	6.6	67	76	89	9	M8x20	50	18	57.5	30.5	67.5	40.5	28.5	15	83	30.5	93	40.5
ø63	60	9	80	92	108	9	M10x25	60	18	63	36	73	46	28.5	15	88.5	36	98.5	46
ø80	77	11	99	116	134	11	M12x40	77	20	74.5	43.5	84.5	53.5	35.5	18	108	43.5	118	53.5
ø100	94	11	117	136	154	11	M12x40	94	22	86	53	96	63	35.5	18	117.5	53	127.5	63

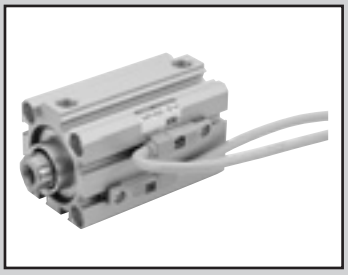

Compact cylinder double acting/high load/coolant proof

SSD2-KG2/KG3 Series

● Bore size: ø16/ø20/ø25/ø32/ø40/ø50
ø63/ø80/ø100

JIS symbol 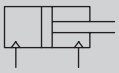

RoHS

Specifications

Item	SSD2-KG2/KG3 SSD2-KG2L/KG3L (with switch)								
Bore size mm	ø16	ø20	ø25	ø32	ø40	ø50	ø63	ø80	ø100
Actuation	Double acting								
Working fluid	Compressed air								
Max. working pressure MPa	1.0 (≈150 psi, 10 bar)								
Min. working pressure MPa	0.15 (≈22 psi, 1.5 bar)						0.1 (≈15 psi, 1 bar)		
Proof pressure MPa	1.6 (≈230 psi, 16 bar)								
Ambient temperature °C	-10 (14°F) to 60 (140°F) (no freezing)								
Port size	M5x0.8			Rc1/8		Rc1/4		Rc3/8	
Stroke tolerance mm	$^{+2.0}_{0}$								
Working piston speed mm/s	50 to 500						50 to 300		
Cushion	Rubber cushion								
Lubrication	Not required (use turbine oil class 1 ISO VG32 if necessary for lubrication)								
Allowable absorbed energy J	0.09	0.16	0.16	0.4	0.63	0.98	1.56	2.51	3.92

Stroke

Bore size (mm)	Standard stroke (mm)	Max. stroke (mm)	Min. stroke (mm)
ø16	5/10/15/20/25/30	30	1(10) The value in ( ) is for types with one or two switches.
ø20	5/10/15/20/25/30/35/40/45/50	50	
ø25			
ø32	5/10/15/20/25/30/35/40/45/50/75/100	100	
ø40			
ø50	10/15/20/25/30/35/40/45/50/75/100	100	
ø63			
ø80			
ø100			

*1: The custom stroke is available in 1 mm increments. (Less than 10 mm with switch is not available.) However, the total length is the same as that of the next longer standard stroke.

Custom stroke

● SSD2-KG2/KG3 Series

Item	Standard products Standard stroke body with spacer	
Model No.	Refer to How to order.	
Description	A spacer is added to the standard stroke body to adjust the stroke in 1 mm increments.	
Stroke range	Bore size	Stroke range
	16	1 to 29
	20 to 25	1 to 49
	32 to 100	1 to 99
Example of model No.	Model No.: SSD2-KG2-32-41 A +4 mm spacer is added to the SSD2-KG2-32-45 standard cylinder to create 41 mm stroke. B + stroke is 88 mm.	

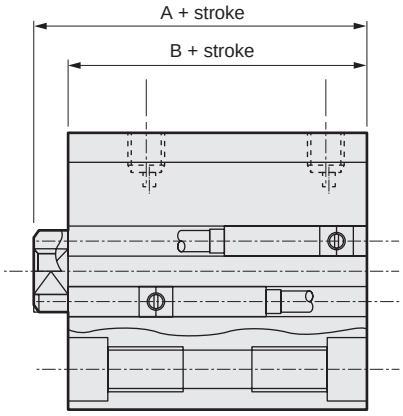

Switch specifications

● Proximity switch

Type/model No.	Proximity/2-wire	Proximity/3-wire
Item	T2YLH/T2YLV	T3YLH/T3YLV
Applications	Dedicated for programmable controller	Programmable controller, relay
Power supply voltage	-	10 to 28 VDC
Load voltage/current	10 to 30 VDC, 5 to 20 mA *1	30 VDC or less, 50 mA or less
Indicator	Red/green LED (Lit when ON)	
Leakage current	1 mA or less	10 μA or less
Max. shock resistance	980 m/S^2	
Weight g	1 m:33 3 m:87 5 m:142	

*1 : The above max. load current is 20 mA at 25°C. The current is lower than 20 mA if the operating ambient temperature around the switch is higher than 25˚C. (5 to 10 mA at 60˚C)

*2 : Refer to Ending Page 1 for other switch specifications.

Cylinder weight table

(the weight of the switches is when there are 2 cylinder switches.) (Unit: g)

Stroke (mm)	5		10		15		20		25		30		35		40		45		50		75		100	
Bore size (mm)	No switch	Switch	No switch	Switch	No switch	Switch	No switch	Switch	No switch	Switch	No switch	Switch	No switch	Switch	No switch	Switch	No switch	Switch	No switch	Switch	No switch	Switch	No switch	Switch
ø16	69	114	79	124	90	135	101	146	112	157	123	168	-	-	-	-	-	-	-	-	-	-	-	-
ø20	68	163	101	176	114	189	126	201	139	214	151	226	164	239	176	251	189	264	201	276	-	-	-	-
ø25	118	209	134	225	150	241	166	257	181	272	198	289	214	305	230	321	246	337	262	353	-	-	-	-
ø32	211	325	232	346	253	367	275	389	297	411	319	433	341	455	362	476	384	498	405	519	513	627	620	734
ø40	289	432	316	459	343	486	369	512	395	538	422	565	449	592	475	618	502	645	528	671	661	804	793	936
ø50	-	-	509	703	551	745	594	788	637	831	678	872	720	914	762	956	804	998	846	1040	1056	1250	1266	1460
ø63	-	-	727	1006	782	1061	837	1116	893	1172	948	1227	1003	1282	1058	1337	1113	1392	1168	1447	1443	1722	1718	1997
ø80	-	-	1274	1687	1361	1774	1447	1860	1534	1947	1621	2034	1708	2121	1794	2207	1881	2294	1967	2380	2400	2813	2832	3245
ø100	-	-	1887	2454	2001	2568	2115	2682	2229	2796	2342	2909	2456	3023	2570	3137	2684	3251	2798	3365	3368	3935	3938	4505

Theoretical thrust table

(Unit: N)

Bore size (mm)	Operating direction	Working pressure MPa										
		0.1	0.15	0.2	0.3	0.4	0.5	0.6	0.7	0.8	0.9	1.0
ø16	Push	-	30.2	40.2	60.3	80.4	1.01×10^2	1.21×10^2	1.41×10^2	1.61×10^2	1.81×10^2	2.01×10^2
	Pull	-	22.6	30.2	45.2	60.3	75.4	90.5	1.06×10^2	1.21×10^2	1.36×10^2	1.51×10^2
ø20	Push	-	47.1	62.8	94.2	1.26×10^2	1.57×10^2	1.88×10^2	2.20×10^2	2.51×10^2	2.83×10^2	3.14×10^2
	Pull	-	35.3	47.1	70.7	94.2	1.18×10^2	1.41×10^2	1.65×10^2	1.88×10^2	2.12×10^2	2.36×10^2
ø25	Push	-	73.6	98.2	1.47×10^2	1.96×10^2	2.45×10^2	2.95×10^2	3.44×10^2	3.93×10^2	4.42×10^2	4.91×10^2
	Pull	-	56.7	75.6	1.13×10^2	1.51×10^2	1.89×10^2	2.27×10^2	2.64×10^2	3.02×10^2	3.40×10^2	3.78×10^2
ø32	Push	-	1.21×10^2	1.61×10^2	2.41×10^2	3.22×10^2	4.02×10^2	4.83×10^2	5.63×10^2	6.43×10^2	7.24×10^2	8.04×10^2
	Pull	-	90.5	1.21×10^2	1.81×10^2	2.41×10^2	3.02×10^2	3.62×10^2	4.22×10^2	4.83×10^2	5.43×10^2	6.03×10^2
ø40	Push	-	1.88×10^2	2.51×10^2	3.77×10^2	5.03×10^2	6.28×10^2	7.54×10^2	8.80×10^2	1.01×10^3	1.13×10^3	1.26×10^3
	Pull	-	1.58×10^2	2.11×10^2	3.17×10^2	4.22×10^2	5.28×10^2	6.33×10^2	7.39×10^2	8.44×10^2	9.50×10^2	1.06×10^3
ø50	Push	-	2.95×10^2	3.93×10^2	5.89×10^2	7.85×10^2	9.82×10^2	1.18×10^3	1.37×10^3	1.57×10^3	1.77×10^3	1.96×10^3
	Pull	-	2.47×10^2	3.30×10^2	4.95×10^2	6.60×10^2	8.25×10^2	9.90×10^2	1.15×10^3	1.32×10^3	1.48×10^3	1.65×10^3
ø63	Push	3.12×10^2	4.68×10^2	6.23×10^2	9.35×10^2	1.25×10^3	1.56×10^3	1.87×10^3	2.18×10^3	2.49×10^3	2.81×10^3	3.12×10^3
	Pull	2.80×10^2	4.20×10^2	5.61×10^2	8.41×10^2	1.12×10^3	1.40×10^3	1.68×10^3	1.96×10^3	2.24×10^3	2.52×10^3	2.80×10^3
ø80	Push	5.03×10^2	7.54×10^2	1.01×10^3	1.51×10^3	2.01×10^3	2.51×10^3	3.02×10^3	3.52×10^3	4.02×10^3	4.52×10^3	5.03×10^3
	Pull	4.54×10^2	6.80×10^2	9.07×10^2	1.36×10^3	1.81×10^3	2.27×10^3	2.72×10^3	3.17×10^3	3.63×10^3	4.08×10^3	4.54×10^3
ø100	Push	7.85×10^2	1.18×10^3	1.57×10^3	2.36×10^3	3.14×10^3	3.93×10^3	4.71×10^3	5.50×10^3	6.28×10^3	7.07×10^3	7.85×10^3
	Pull	7.15×10^2	1.07×10^3	1.43×10^3	2.14×10^3	2.86×10^3	3.57×10^3	4.29×10^3	5.00×10^3	5.72×10^3	6.43×10^3	7.15×10^3

SCP*3
CMK2
CMA2
SCM
SCG
SCA2
SCS2
CKV2
CAV2/COVP/N2
SSD2
SSG
SSD
CAT
MDC2
MVC
SMG
MSD/MSDG
FC*
STK
SRL3
SRG3
SRM3
SRT3
MRL2
MRG2
SM-25
ShkAbs
FJ
FK
Spd Contr
Ending

How to order

No switch (without magnet for switch)

SSD2-KG2 - 16 - 30 ———— N - LB - I

With switch (built-in magnet for switch)

SSD2-KG2L - 16 - 30 - T2YLH - R - N - LB - I

- Ⓐ Degree of protection level
- Ⓑ Bore size
- Ⓒ Stroke
- Ⓓ Switch model No. *5
- Ⓔ Switch quantity
- Ⓕ Option
- Ⓖ Mounting bracket *1 *2
- Ⓗ Accessory *3

Code	Description
Ⓐ Degree of protection level	
KG2	High load + coolant proof scraper + packing NBR
KG3	High load + coolant proof scraper + packing FKM
KG2L	High load + coolant proof scraper + packing NBR, with switch
KG3L	High load + coolant proof scraper + packing FKM, with switch

Ⓑ Bore size (mm)	
16	ø16
20	ø20
25	ø25
32	ø32
40	ø40
50	ø50
63	ø63
80	ø80
100	ø100

Ⓒ Stroke (mm)

Refer to the stroke table on the following page.

Ⓓ Switch model No.

Lead wire Straight	Lead wire L-shaped	Contact	Voltage	Indicator	Lead wire
T2YLH*	**T2YLV***	Proximity	DC	2-color LED	2-wire
T3YLH*	**T2YLV***				3-wire

*** Lead wire length**	
Blank	1 m (standard)
3	3 m (option)
5	5 m (option)

Ⓔ Switch quantity	
R	1 on rod side
H	1 on head side
D	2

Ⓕ Option	
Blank	Rod end female thread
N	Rod end male thread

Ⓖ Mounting bracket	
Blank	Without mounting bracket
LB	Axial foot (made-to-order product)
CB	Clevis bracket (pin and snap ring included)
FA	Rod side flange (made-to-order product)
FB	Head side flange

Ⓗ Accessory (available when rod end male thread "N" is selected)	
I	Rod eye
Y	Rod clevis (pin and snap ring included)

⚠ Precautions for model No. selection

*1 : The mounting bracket is included at shipment.
*2 : The structure of bore sizes ø16 to ø25 does not permit retrofitting of the foot bracket (LB) or flange bracket (FA) on the rod side. Assembly before shipment is available as made to order.
*3 : "I" and "Y" cannot be selected together.
*4 : Refer to pages 750 and 751 for combinations of variations/options.
*5 : Switches are shipped with the product. Contact CKD if assembling before shipment is necessary.

[Example of model No.]

SSD2-KG2L-32-30-T2YLH-R-N-LB

Model: Compact cylinder, high load

Ⓐ Degree of protection level : Coolant proof scraper + packing NBR, with switch
Ⓑ Bore size : ø32 mm
Ⓒ Stroke : 30 mm
Ⓓ Switch model No. : Proximity switch T2YLH, lead wire 1 m
Ⓔ Switch quantity : 1 on rod side
Ⓕ Option : Rod end male thread
Ⓖ Mounting bracket : Axial foot

How to order switch

SW - T2YLH

Switch model No.
(Item Ⓓ on page 958)

[Stroke table]

Stroke (mm)		Applicable bore size								
		16	20	25	32	40	50	63	80	100
Standard stroke	5	●	●	●	●	●				
	10	●	●	●	●	●	●	●	●	●
	15	●	●	●	●	●	●	●	●	●
	20	●	●	●	●	●	●	●	●	●
	25	●	●	●	●	●	●	●	●	●
	30	●	●	●	●	●	●	●	●	●
	35		●	●	●	●	●	●	●	●
	40		●	●	●	●	●	●	●	●
	45		●	●	●	●	●	●	●	●
	50		●	●	●	●	●	●	●	●
	75				●	●	●	●	●	●
	100				●	●	●	●	●	●
Min. stroke (mm) *1		1								
Max. stroke (mm)		30	50		100					
Custom stroke *2										

*1 : Less than 10 mm stroke is not available.
Refer to page 956 for the number of installed switches and the min. stroke.
*2 : The total length is the same as that of the next longer standard stroke.

How to order mounting bracket

Bore size (mm) / Mounting bracket	ø16	ø20	ø25	ø32	ø40	ø50	ø63	ø80	ø100
Foot (LB)					SSD2-LB-40	SSD2-LB-50	SSD2-LB-63	SSD2-LB-80	SSD2-LB-100
Flange (FA/FB)					SSD2-FA-40	SSD2-FA-50	SSD2-FA-63	SSD2-FA-80	SSD2-FA-100
Clevis bracket (CB)	SSD2-CB-16	SSD2-CB-20	SSD2-CB-25	SSD2-CB-32	SSD2-CB-40	SSD2-CB-50	SSD2-CB-63	SSD2-CB-80	SSD2-CB-100

*1: The foot mounting bracket is provided as 2 pcs./set.
*2: The structure of bore sizes ø16 to ø25 does not permit retrofitting of the foot bracket (LB) or flange bracket (FA) on the rod side. Contact CKD for details.

Internal structure and parts list

- Degree of protection: Packing NBR SSD2-KG2/KG2L
- Degree of protection: Packing FKM SSD2-KG3/KG3L

● SSD2-KG$^{2}_{3}$ L-16 (with switch)

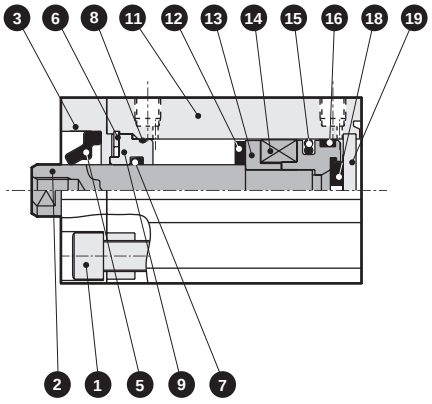

● SSD2-KG$^{2}_{3}$ L-20, 25 (with switch)

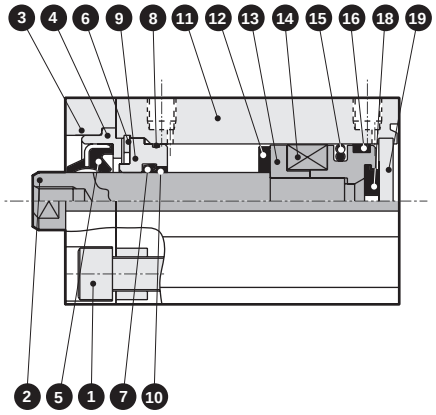

● SSD2-KG$^{2}_{3}$ L-32 to 50 (with switch)

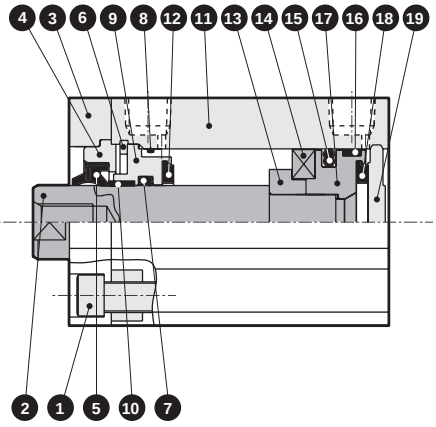

● SSD2-KG$^{2}_{3}$ L-63 to 100 (with switch)

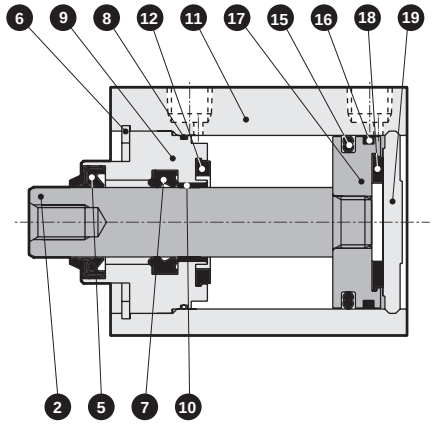

● SSD2-KG$^{2}_{3}$ -16 (without switch)

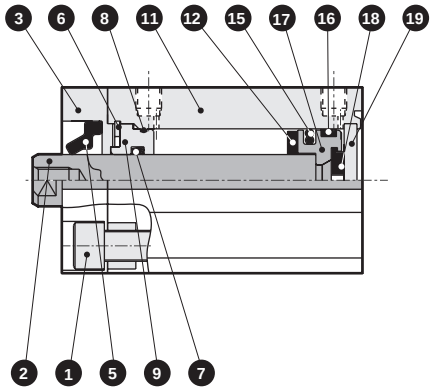

● SSD2-KG$^{2}_{3}$ -20, 25 (without switch)

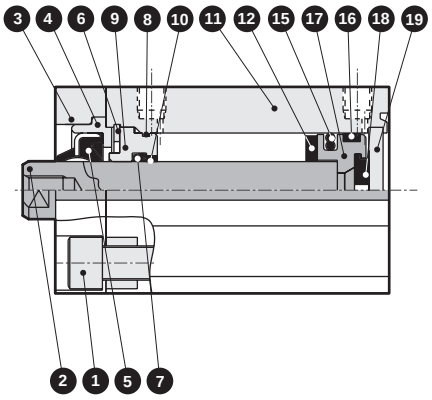

● SSD2-KG$^{2}_{3}$ -32 to 50 (without switch)

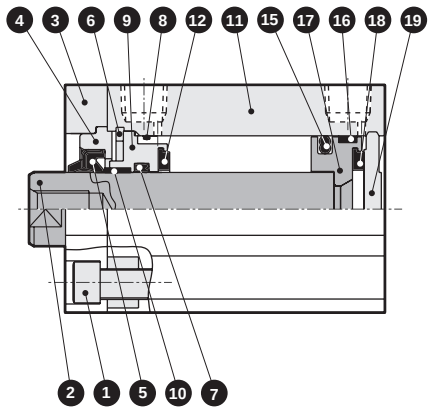

● SSD2-KG$^{2}_{3}$ -63 to 100 (without switch)

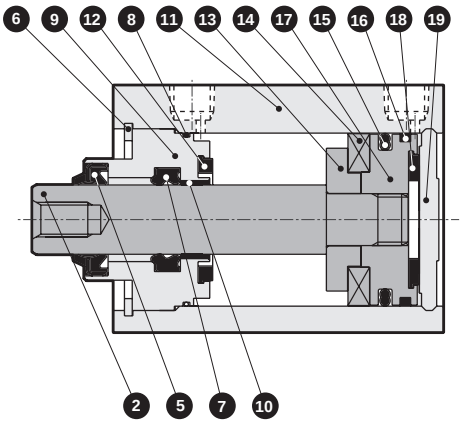

Main parts list

Part No.	Part name		Material	Remarks	Part No.	Part name		Material	Remarks
1	Hexagon socket head cap screw		Stainless steel	ø16 to ø32 only	10	Bush		Oiles drymet	ø20 to ø100 only
2	Piston rod		Stainless steel	Industrial chrome plating	11	Body		Aluminum alloy	Hard alumite
3	Adaptor (A)		Aluminum alloy	ø16 to ø32 only	12	Cushion rubber (R)		Urethane rubber	
4	Adaptor (B)		Aluminum alloy	ø16 to ø32 only	13	Spacer		Aluminum alloy	ø16 to ø32: Chromate
5	Scraper	G2	Nitrile rubber		14	Magnet		Plastic	
		G3	Fluoro rubber		15	Piston packing	G2	Nitrile rubber	
6	C-snap ring (for hole)		Stainless steel				G3	Fluoro rubber	
7	Rod packing	G2	Nitrile rubber		16	Wear ring		Polyacetal resin	
		G3	Fluoro rubber		17	Piston		Aluminum alloy	Chromate
8	Rod metal gasket	G2	Nitrile rubber		18	Cushion rubber (H)		Urethane rubber	
		G3	Fluoro rubber		19	Cover		ø16 to ø25: Stainless steelø32 to ø100: Aluminum alloy	Alumite: ø32 to ø100
9	Rod metal		Aluminum alloy	Alumite					

Consumable parts list

Part name / Bore size (mm)	Kit No.	Consumable parts No.
ø16	SSD2-KG2-16K	5 7 8 12 15 16 18
	SSD2-KG3-16K	
ø20	SSD2-KG2-20K	
	SSD2-KG3-20K	
ø25	SSD2-KG2-25K	
	SSD2-KG3-25K	
ø32	SSD2-KG2-32K	
	SSD2-KG3-32K	
ø40	SSD2-KG2-40K	
	SSD2-KG3-40K	
ø50	SSD2-KG2-50K	
	SSD2-KG3-50K	
ø63	SSD2-KG2-63K	
	SSD2-KG3-63K	
ø80	SSD2-KG2-80K	
	SSD2-KG3-80K	
ø100	SSD2-KG2-100K	
	SSD2-KG3-100K	

Note: Specify the kit No. when placing an order.

SCP*3
CMK2
CMA2
SCM
SCG
SCA2
SCS2
CKV2
CAV2/COVP/N2
SSD2
SSG
SSD
CAT
MDC2
MVC
SMG
MSD/MSDG
FC*
STK
SRL3
SRG3
SRM3
SRT3
MRL2
MRG2
SM-25
ShkAbs
FJ
FK
Spd Contr
Ending

dimensions

- Degree of protection: Packing NBR
  SSD2-KG/KG2L
- Degree of protection: Packing FKM
  SSD2-KG3/KG3L

● Rod end male thread

ø16

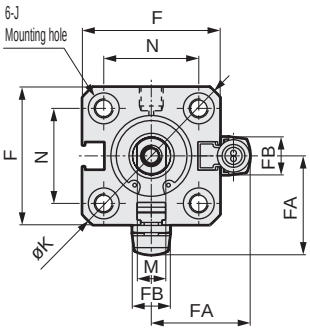

ø20/ø25

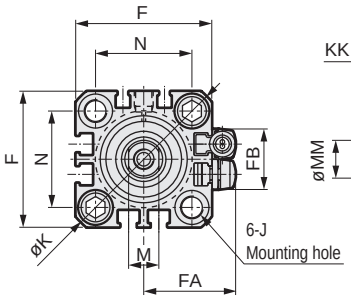

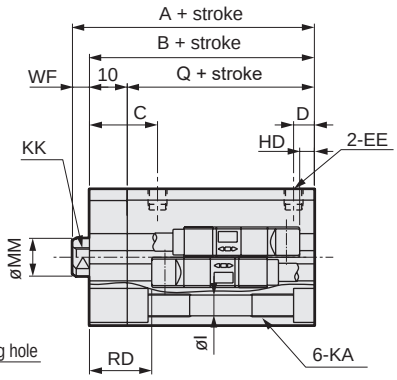

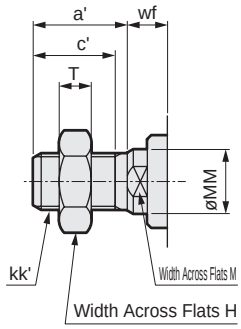

ø32

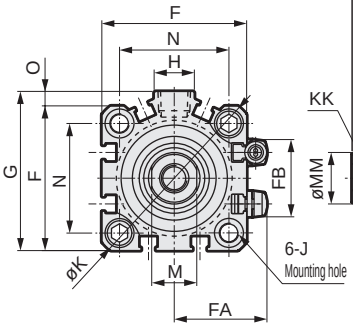

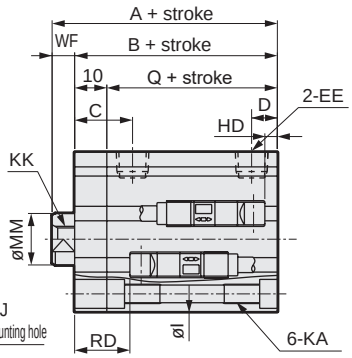

ø40 to ø100

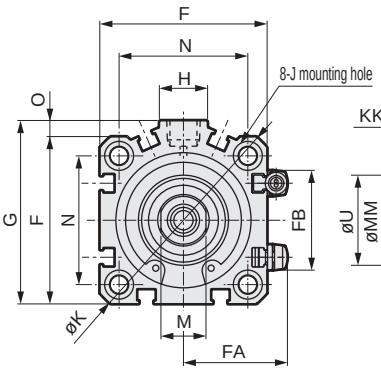

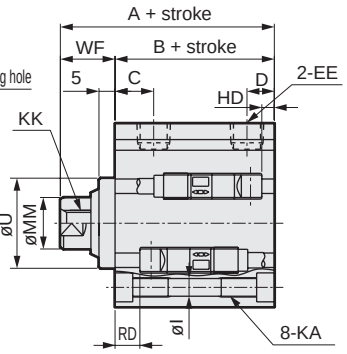

*1: To calculate A + stroke or B + stroke when using custom stroke, apply the next longer standard stroke (instead of the custom stroke) to the stroke value. (Example) If the custom stroke is 7 mm, apply the standard stroke of 10 mm.
*2: HD and RD dimensions for 5 mm stroke differ from these dimensions according to the setting.
***3: For dimensions of individual accessories, refer to pages 1046 to 1049.**
*4: Dimensions in ( ) of codes A and B are for strokes of more than 50 mm.
*5: Dimensions in ( ) of code J are for the spot face of rod side mounting hole.

Code	Dimensions without switch			Common dimensions with switch															
Bore size (mm)	A *1	B *1	Q *1	A *1	B *1	Q *1	C	D	EE	F	FA	FB	G	H	I	J	K	KA	KK
ø16	40.5	32	22	45.5	37	27	15.5	5.5	M5	29	21	8	-	-	3.5	6.5 spot face depth 3.5(13.4)	38	M4 depth 7	M4 depth 8
ø20	44	34.5	24.5	54	44.5	34.5	18	5.5	M5	36	24.5	16	-	-	5.5	9 spot face depth 5.5(15.5)	47	M6 depth 11	M5 depth 7
ø25	47.5	37.5	27.5	57.5	47.5	37.5	21	6	M5	40	26.5	17	-	-	5.5	9 spot face depth 5.5(15.5)	51	M6 depth 11	M6 depth 12
ø32	55 (65)	43 (53)	33 (43)	65	53	43	18	8	Rc1/8	45	29	24	49.5	12.5	5.5	9 spot face depth 5.5(15.5)	60	M6 depth 11	M8 depth 13
ø40	56.5 (66.5)	39.5 (49.5)	-	66.5	49.5	-	12	8.5	Rc1/8	52	32.5	31	57	15	5.5	ø9 spot face depth 5.5	69	M6 depth 11	M8 depth 13
ø50	58.5 (68.5)	40.5 (50.5)	-	68.5	50.5	-	10.5	10.5	Rc1/4	64	38.5	32	71	18	6.9	φ11 spot face depth 6.5	86	M8 depth 13	M10 depth 15
ø63	64 (74)	46 (56)	-	74	56	-	13	11	Rc1/4	77	45	32	84	23	8.7	ø14 spot face depth 9	103	M10 depth 25	M10 depth 15
ø80	73.5 (83.5)	53.5 (63.5)	-	83.5	63.5	-	16	13	Rc3/8	98	55.5	32	104	31	10.5	ø17.5 spot face depth 11	132	M12 depth 28	M16 depth 21
ø100	85 (95)	63 (73)	-	95	73	-	23	15	Rc3/8	117	65	32	123.5	38	10.5	ø17.5 spot face depth 11	156	M12 depth 28	M20 depth 27

Code	Common dimensions with switch						Proximity T2YLH, T2YLV, T3YLH, T3YLV		Dimensions of rod end male thread part							
Bore size (mm)	M	MM	N	O	U	WF	HD	RD	a'	c'	H	KK'	M	MM	T	wf
ø16	6	8	20	-	-	8.5	2.5	14.5	12	10	10	M6	6	8	3.6	8.5
ø20	8	10	25.5	-	-	9.5	4.5	20.0	14	12	13	M8	8	10	5	9.5
ø25	10	12	28	-	-	10	4.5	22.5	17.5	15	17	M 10 x 1.25	10	12	6	10
ø32	14	16	34	4.5	-	12	9.5	25.5	23.5	20.5	22	M 14 x 1.5	14	16	8	10
ø40	14	16	40	5	28	17	10.5	31.0	23.5	20.5	22	M 14 x 1.5	14	16	8	15
ø50	17	20	50	7	35	18	11.5	31.0	28.5	26	27	M 18 x 1.5	17	20	11	15
ø63	17	20	60	7	35	18	18.0	29.0	28.5	26	27	M 18 x 1.5	17	20	11	15
ø80	22	25	77	6	43	20	24.0	31.5	35.5	32.5	32	M 22 x 1.5	22	25	13	18
ø100	27	30	94	6.5	59	22	29.5	35.5	35.5	32.5	41	M 26 x 1.5	27	30	16	18

MEMO

Dimensions with mounting bracket

● Clevis bracket (CB)
SSD2-KG2(L)/KG3(L)-20 to 100 -CB

• ø16 to ø25

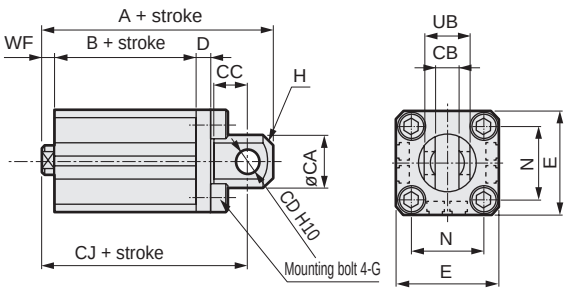

• ø32 to ø100

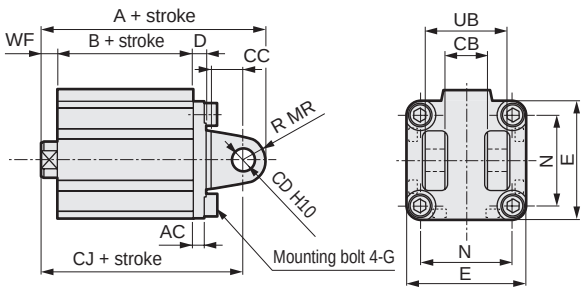

Rod end male thread

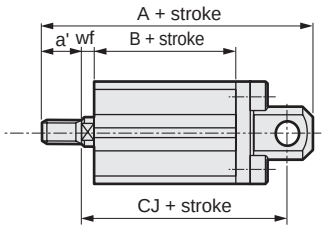

Rod end male thread

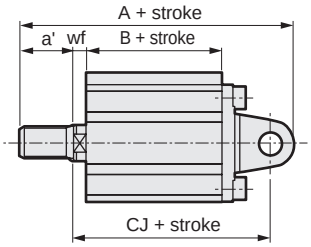

Code	Common dimensions											
Bore size(mm)	AC	CA	CB	CC	CD	D	E	G	H	MR	N	UB
ø16	-	15	$6.6^{+0.3\ 0}$	8	5	5	29	M 4 x 12	C2	-	20	12
ø20	-	20	$8.2^{+0.2\ 0}$	12	8	5	36	M 6 x 16	C4	-	25.5	16
ø25	-	24	$10.2^{+0.2\ 0}$	14	10	5	40	M 6 x 16	C5	-	28	20
ø32	4.5	-	$18.2^{+0.2\ 0}$	14	10	5	45	M 6 x 16	-	10	34	36
ø40	5	-	$18.2^{+0.2\ 0}$	14	10	6	52	M 6 x 16	-	10	40	36
ø50	6	-	$22.2^{+0.2\ 0}$	20	14	7	64	M 8 x 20	-	14	50	44
ø63	7	-	$22.2^{+0.2\ 0}$	20	14	8	77	M 10 x 25	-	14	60	44
ø80	9	-	$28.2^{+0.2\ 0}$	27	18	10	98	M 12 x 40	-	18	77	56
ø100	12	-	$32.2^{+0.2\ 0}$	31	22	13	117	M 12 x 40	-	22	94	64

Code	Female thread							Male thread							
Bore size(mm)	WF	No switch			With switch			a'	wf	No switch			With switch		
		A	B	CJ	A	B	CJ			A	B	CJ	A	B	CJ
ø16	8.5	61.5	32	55.5	66.5	37	60.5	12	8.5	73.5	32	55.5	78.5	37	60.5
ø20	9.5	71	34.5	62	81	44.5	72	14	9.5	85	34.5	62	95	44.5	72
ø25	10	77.5	37.5	67.5	87.5	47.5	77.5	17.5	10	95	37.5	67.5	105	47.5	77.5
ø32	12	85	43	75	95	53	85	23.5	10	106.5	43	73	116.5	53	83
ø40	17	88.5	39.5	78.5	98.5	49.5	88.5	23.5	15	110	39.5	76.5	120	49.5	86.5
ø50	18	100.5	40.5	86.5	110.5	50.5	96.5	28.5	15	126	40.5	83.5	136	50.5	93.5
ø63	18	108	46	94	118	56	104	28.5	15	133.5	46	91	143.5	56	101
ø80	20	129.5	53.5	111.5	139.5	63.5	121.5	35.5	18	163	53.5	109.5	173	63.5	119.5
ø100	22	152	63	130	162	73	140	35.5	18	183.5	63	126	193.5	73	136

Dimensions with mounting bracket

● Head side flange (FB)
SSD2-KG2(L)/KG3(L)-20 to 100 -FB

· ø16 to ø25

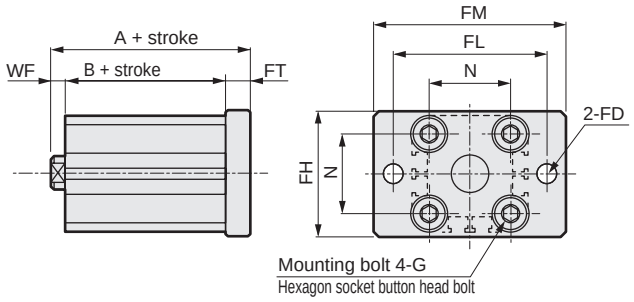

· ø32 to ø100

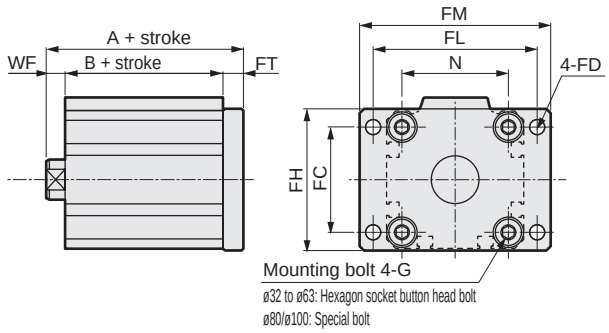

Rod end male thread

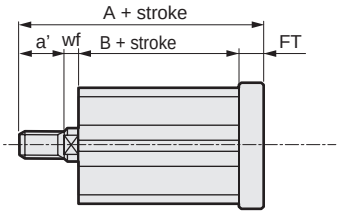

Rod end male thread

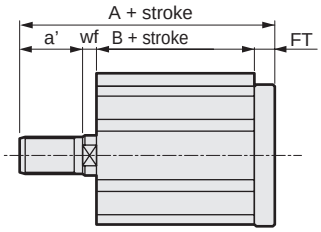

Code	Common dimensions								Female thread					Male thread					
Bore size (mm)	FC	FD	FH	FL	FM	FT	G	N	WF	No switch		With switch		a'	wf	No switch		With switch	
										A	B	A	B			A	B	A	B
ø16	-	4.5	30	45	55	5.5	M4x12	20	8.5	46	32	51	37	12	8.5	58	32	63	37
ø20	-	6.6	39	48	60	8	M6x16	25.5	9.5	52	34.5	62	44.5	14	9.5	66	34.5	76	44.5
ø25	-	6.6	42	52	64	8	M6x16	28	10	55.5	37.5	65.5	47.5	17.5	10	73	37.5	83	47.5
ø32	34	5.5	48	56	65	8	M6x16	34	12	63	43	73	53	23.5	10	84.5	43	94.5	53
ø40	40	5.5	54	62	72	8	M6x16	40	17	64.5	39.5	74.5	49.5	23.5	15	86	39.5	96	49.5
ø50	50	6.6	67	76	89	9	M8x20	50	18	67.5	40.5	77.5	50.5	28.5	15	93	40.5	103	50.5
ø63	60	9	80	92	108	9	M10x25	60	18	73	46	83	56	28.5	15	98.5	46	108.5	56
ø80	77	11	99	116	134	11	M12x40	77	20	84.5	53.5	94.5	63.5	35.5	18	118	53.5	128	63.5
ø100	94	11	117	136	154	11	M12x40	94	22	96	63	106	73	35.5	18	127.5	63	137.5	73

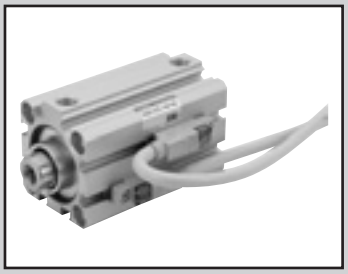

Compact cylinder
double acting/single rod/coil scraper

Compact cylinder
double acting/single rod/anti-spatter adherence

SSD2-G1 Series SSD2-G4 Series

● Bore size: ø25/ø32/ø40/ø50/ø63/ø80/ø100

JIS symbol

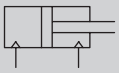

RoHS CAD

Specifications

Item	SSD2-G1/G4 SSD2-G1L/G4L (with switch)						
Bore size mm	ø25	ø32	ø40	ø50	ø63	ø80	ø100
Actuation	Double acting						
Working fluid	Compressed air						
Max. working pressure MPa	1.0 (≈150 psi, 10 bar)						
Min. working pressure MPa	0.15 (≈22 psi, 1.5 bar)				0.1 (≈15 psi, 1 bar)		
Proof pressure MPa	1.6 (≈230 psi, 16 bar)						
Ambient temperature °C	-10 (14°F) to 60 (140°F) (no freezing)						
Port size	M5	Rc1/8		Rc1/4		Rc3/8	
Stroke tolerance mm	$^{+1.0}_{0}$						
Working piston speed mm/s	50 to 500				50 to 300		
Cushion	None						
Lubrication	Not required (use turbine oil class 1 ISO VG32 if necessary for lubrication)						
Allowable absorbed energy J	0.021	0.025	0.092	0.1	0.12	0.27	0.56

*1: The ø32 bore size with a 5 mm stroke and without a switch has a port size of M5.

Stroke

Bore size (mm)	Standard stroke (mm)	Max. stroke (mm)	Min. stroke (mm)
ø25	5/10/15/20/25/30/35/40/45/50	50	1(10) The value in ( ) is for types with one or two switches.
ø32	5/10/15/20/25/30/35/40/45/50/75/100	100	
ø40			
ø50	10/15/20/25 30/35/40/45/50 75/100		
ø63			
ø80			
ø100			

Custom stroke

● SSD2-G1, G4 Series

Item	Standard products Standard stroke body with spacer	
Model No.	Refer to How to order.	
Description	A spacer is added to the standard stroke body to adjust the stroke in 1 mm increments.	
Stroke range	Bore size	Stroke range
	25	1 to 49
	32 to 100	1 to 99
Example of model No.	Model No.: SSD2-G1-32-38 A +2 mm spacer is added to the SSD2-G1-32-40 standard cylinder to create 38 mm stroke. B + stroke is 63mm.	

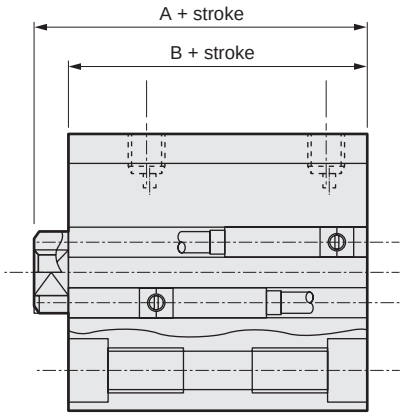

Switch specifications

Item	2-wire proximity
	T2YD/T2YDT
Applications	Dedicated for programmable controller
Indicator	Red/green LED (Lit when ON)
Load voltage	24 VDC ±10%
Load current	5 to 20 VDC
Internal voltage drop	6V or less
Leakage current	1.0 mA or less
Output delay time *1 (Delay ON, delay OFF)	60 ms or less
Lead wire length	1 m (oil resistant vinyl cabtyre cable ø 6, 0.5 mm^2 x 2-conductor) *2, *3
Insulation resistance	100 MΩ and over with 500 VDC megger
Withstand voltage	No failure after 1 minute of 1,000 VAC application.
Max. shock resistance	980 m/s^2
Ambient temperature	-10 to +60°C
Degree of protection	JIS C0920 (water-tight), IEC standards IP67, oil resistance
Weight g	1 m:61 3 m:166 5 m:272

*1: Indicates the time from magnetic sensor detection of the piston magnet until switch output.
*2: 3 m and 5 m lead wires are available as options.
*3: Flame-resistant lead wires are available as options.
*4: This switch cannot be used in DC environments.

Cylinder weight table (the weight of the switches is when there are 2 cylinder switches.)

(Unit: g)

Stroke (mm)	5		10		15		20		25		30		35		40		45		50		75		100	
Bore size (mm)	No switch	Switch	No switch	Switch	No switch	Switch	No switch	Switch	No switch	Switch	No switch	Switch	No switch	Switch	No switch	Switch	No switch	Switch	No switch	Switch	No switch	Switch	No switch	Switch
ø25	131	222	146	237	162	253	178	269	194	285	209	300	225	600	241	332	257	166	272	363	-	-	-	-
ø32	184	298	206	320	228	342	250	364	271	385	293	407	315	429	337	451	359	473	380	494	553	602	661	709
ø40	265	408	292	435	318	461	345	488	372	515	398	541	425	568	451	594	478	621	504	647	722	780	854	912
ø50	-	-	460	654	502	696	544	738	586	780	629	823	671	865	713	907	755	949	797	991	1144	1201	1354	1411
ø63	-	-	658	937	713	992	768	1047	823	1102	878	1157	934	1213	989	1268	1044	1323	1099	1378	1589	1653	1864	1928
ø80	-	-	1180	1593	1267	1680	1353	1765	1440	1853	1526	1939	1613	2026	1700	2113	1787	2200	1873	2286	2650	2719	3082	3151
ø100	-	-	1768	2335	1882	2449	1995	2562	2109	2676	2223	2790	2337	2904	2450	3017	2564	3131	2678	3245	3743	3815	4313	4385

Theoretical thrust table

(Unit: N)

Bore size (mm)	Operating direction	Working pressure MPa										
		0.1	0.15	0.2	0.3	0.4	0.5	0.6	0.7	0.8	0.9	1.0
ø25	Push	-	73.6	98.2	$1.47x10^2$	$1.96x10^2$	$2.45x10^2$	$2.95x10^2$	$3.44x10^2$	$3.93x10^2$	$4.42x10^2$	$4.91x10^2$
	Pull	-	56.7	75.6	$1.13x10^2$	$1.51x10^2$	$1.89x10^2$	$2.27x10^2$	$2.64x10^2$	$3.02x10^2$	$3.40x10^2$	$3.78x10^2$
ø32	Push	-	$1.21x10^2$	$1.61x10^2$	$2.41x10^2$	$3.22x10^2$	$4.02x10^2$	$4.83x10^2$	$5.63x10^2$	$6.43x10^2$	$7.24x10^2$	$8.04x10^2$
	Pull	-	90.5	$1.21x10^2$	$1.81x10^2$	$2.41x10^2$	$3.02x10^2$	$3.62x10^2$	$4.22x10^2$	$4.83x10^2$	$5.43x10^2$	$6.03x10^2$
ø40	Push	-	$1.88x10^2$	$2.51x10^2$	$3.77x10^2$	$5.03x10^2$	$6.28x10^2$	$7.54x10^2$	$8.80x10^2$	$1.01x10^3$	$1.13x10^3$	$1.26x10^3$
	Pull	-	$1.58x10^2$	$2.11x10^2$	$3.17x10^2$	$4.22x10^2$	$5.28x10^2$	$6.33x10^2$	$7.39x10^2$	$8.44x10^2$	$9.50x10^2$	$1.06x10^3$
ø50	Push	-	$2.95x10^2$	$3.93x10^2$	$5.89x10^2$	$7.85x10^2$	$9.82x10^2$	$1.18x10^3$	$1.37x10^3$	$1.57x10^3$	$1.77x10^3$	$1.96x10^3$
	Pull	-	$2.47x10^2$	$3.30x10^2$	$4.95x10^2$	$6.60x10^2$	$8.25x10^2$	$9.90x10^2$	$1.15x10^3$	$1.32x10^3$	$1.48x10^3$	$1.65x10^3$
ø63	Push	$3.12x10^2$	$4.68x10^2$	$6.23x10^2$	$9.35x10^2$	$1.25x10^3$	$1.56x10^3$	$1.87x10^3$	$2.18x10^3$	$2.49x10^3$	$2.81x10^3$	$3.12x10^3$
	Pull	$2.80x10^2$	$4.20x10^2$	$5.61x10^2$	$8.41x10^2$	$1.12x10^3$	$1.40x10^3$	$1.68x10^3$	$1.96x10^3$	$2.24x10^3$	$2.52x10^3$	$2.80x10^3$
ø80	Push	$5.03x10^2$	$7.54x10^2$	$1.01x10^3$	$1.51x10^3$	$2.01x10^3$	$2.51x10^3$	$3.02x10^3$	$3.52x10^3$	$4.02x10^3$	$4.52x10^3$	$5.03x10^3$
	Pull	$4.54x10^2$	$6.80x10^2$	$9.07x10^2$	$1.36x10^3$	$1.81x10^3$	$2.27x10^3$	$2.72x10^3$	$3.17x10^3$	$3.63x10^3$	$4.08x10^3$	$4.54x10^3$
ø100	Push	$7.85x10^2$	$1.18x10^3$	$1.57x10^3$	$2.36x10^3$	$3.14x10^3$	$3.93x10^3$	$4.71x10^3$	$5.50x10^3$	$6.28x10^3$	$7.07x10^3$	$7.85x10^3$
	Pull	$7.15x10^2$	$1.07x10^3$	$1.43x10^3$	$2.14x10^3$	$2.86x10^3$	$3.57x10^3$	$4.29x10^3$	$5.00x10^3$	$5.72x10^3$	$6.43x10^3$	$7.15x10^3$

How to order

No switch (without magnet for switch)

SSD2-G4 - 32 - 10 — N - LB - I

With switch (built-in magnet for switch)

SSD2-G4L - 32 - 10 - T2YD - R - N - LB - I

- Ⓐ Model No.
- Ⓑ Bore size
- Ⓒ Stroke *1
- Ⓓ Switch model No.
- Ⓔ Switch quantity
- Ⓕ Option
- Ⓖ Mounting bracket *1
- Ⓗ Accessory *2

Code	Description
Ⓐ Model No.	
SSD2-G1	Double acting/single rod/coil scraper
SSD2-G1L	Double acting/single rod/coil scraper/with switch
SSD2-G4	Double acting/single rod/anti-spatter adherence
SSD2-G4L	Double acting/single rod/anti-spatter adherence/with switch
Ⓑ Bore size (mm)	
25	ø25
32	ø32
40	ø40
50	ø50
63	ø63
80	ø80
100	ø100
Ⓒ Stroke (mm)	
Refer to the stroke table on the following page.	

Ⓓ Switch model No.

Lead wire Straight	Lead wire L-shaped	Contact	Voltage	Indicator	Lead wire
T2YD*	-	Proximity	DC	2-color LED for AC magnetic field	2-wire
T2YDT*	-				

*** Lead wire length**	
Blank	1 m (standard)
3	3 m (option)
5	5 m (option)

Ⓔ Switch quantity	
R	1 on rod side
H	1 on head side
D	2

Ⓕ Option	
Blank	Rod end female thread
N	Rod end male thread

Ⓖ Mounting bracket	
Blank	Without mounting bracket
LB	Axial foot (made to order)
CB	Clevis bracket (pin and snap ring included)
FA	Rod side flange (made to order)
FB	Head side flange

Ⓗ Accessory (available when rod end male thread "N" is selected)	
I	Rod eye
Y	Rod clevis (pin and snap ring included)

⚠ Precautions for model No. selection

*1: The mounting bracket is included at shipment.
*2: "I" and "Y" cannot be selected together.

[Example of model No.]

SSD2-G4L-32-10-T2YD-R-N

Model: Compact cylinder
Double acting/anti-spatter adherence

Ⓑ Bore size : ø32 mm
Ⓒ Stroke : 10 mm
Ⓓ Switch model No.: Proximity switch for AC magnetic field
T2YD, lead wire length 1 m
Ⓔ Switch quantity : 1 on rod side
Ⓕ Option : Rod end male thread

[Stroke table]

Stroke (mm)		Applicable bore size						
		25	32	40	50	63	80	100
Standard stroke	5	●	●	●				
	10	●	●	●	●	●	●	●
	15	●	●	●	●	●	●	●
	20	●	●	●	●	●	●	●
	25	●	●	●	●	●	●	●
	30	●	●	●	●	●	●	●
	35	●	●	●	●	●	●	●
	40	●	●	●	●	●	●	●
	45	●	●	●	●	●	●	●
	50	●	●	●	●	●	●	●
	75		●	●	●	●	●	●
	100		●	●	●	●	●	●
Min. stroke (mm) *1		1						
Max. stroke (mm)		50	100					
Custom stroke *2		In 1 mm increments						

*1 : Less than 10 mm stroke is not available.
Refer to page 966 for the min. stroke with switch.
*2 : The total length when using a custom stroke is the same as that when using the next longer standard stroke.

How to order switch

SW - T2YD*

Switch model No.
(Item Ⓓ on page 968)

How to order mounting bracket

Bore size (mm) / Mounting bracket	ø25	ø32	ø40	ø50	ø63	ø80
Flange (FB)	SSD2-FA-25	SSD2-G1-FA-32	SSD2-FA-40	SSD2-FA-50	SSD2-FA-63	SSD2-FA-80
Clevis bracket (CB)	SSD2-CB-25	SSD2-CB-32	SSD2-CB-40	SSD2-CB-50	SSD2-CB-63	SSD2-CB-80

Bore size (mm) / Mounting bracket	ø100
Flange (FB)	SSD2-FA-100
Clevis bracket (CB)	SSD2-CB-100

*1: The foot mounting bracket is provided as 2 pcs./set.

Internal structure and parts list

● SSD2-G1L, G4L-25 to 50 (double acting/anti-spatter adherence/ with switch)

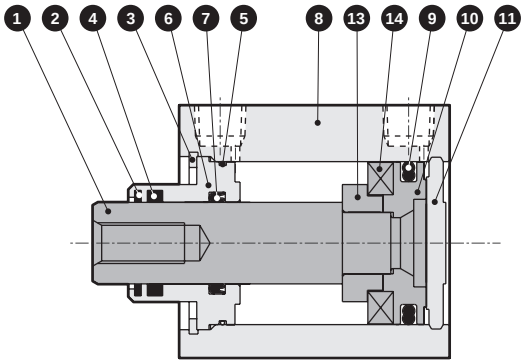

● SSD2-G1L, G4L-63 to 100 (double acting/anti-spatter adherence/ with switch)

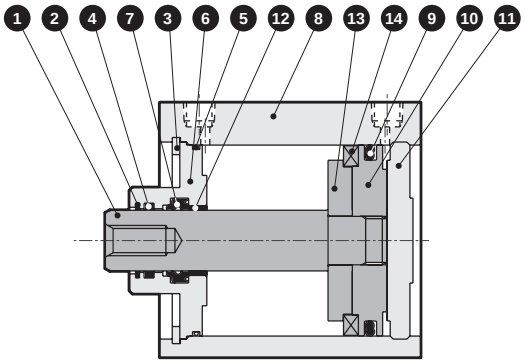

● SSD2-G1, G4-25 to 50 (double acting/anti-spatter adherence)

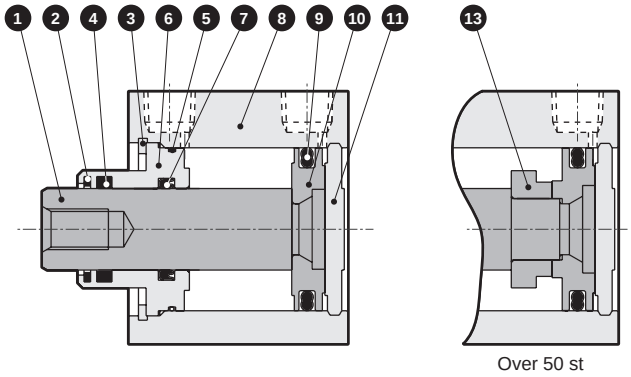

● SSD2-G1, G4-63 to 100 (double acting/anti-spatter adherence)

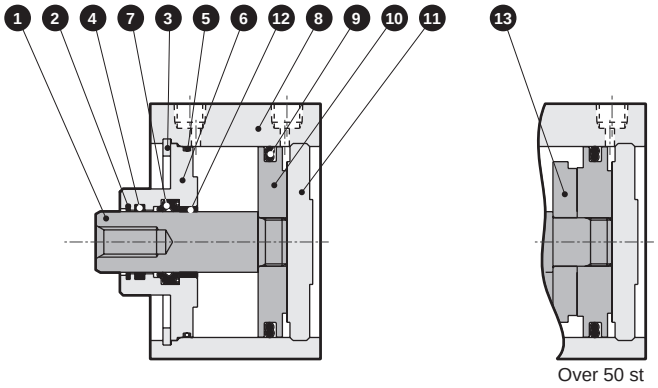

No.	Part name	Material	Remarks
1	Piston rod	ø25: Stainless steel ø32 to ø100: Steel	Industrial chrome plating
2	Coil scraper	Phosphor bronze	
3	C-snap ring	Steel	Zinc phosphate
4	Lube keeping structure	Special rubber	G4 only
5	Rod metal gasket	Nitrile rubber	
6	Rod metal	ø25 to ø50: Special aluminum ø63 to ø100: Aluminum alloy	ø25 to ø50: Alumite ø63 to ø100: Chromate
7	Rod packing	Nitrile rubber	

No.	Part name	Material	Remarks
8	Body	Aluminum alloy	Hard alumite
9	Piston packing	Nitrile rubber	
10	Piston	Aluminum alloy	Chromate
11	Cover	ø25: Stainless steel ø32 to ø100: Aluminum alloy	ø32 to ø100: Alumite
12	Bush	Oiles drymet	
13	Spacer	Aluminum alloy	Chromate
14	Magnet	Plastic	

Repair parts list

Part name / Bore size (mm)	Kit No.	Repair parts No.
ø25	SSD2-G1-25K	2 5 7 9
ø32	SSD2-G1-32K	
ø40	SSD2-G1-40K	
ø50	SSD2-G1-50K	
ø63	SSD2-G1-63K	
ø80	SSD2-G1-80K	
ø100	SSD2-G1-100K	

Dimensions

● SSD2-G1L/G4L-25 to 100 (with switch, T0H/V, T5H/V, T2H/V, T3H/V)

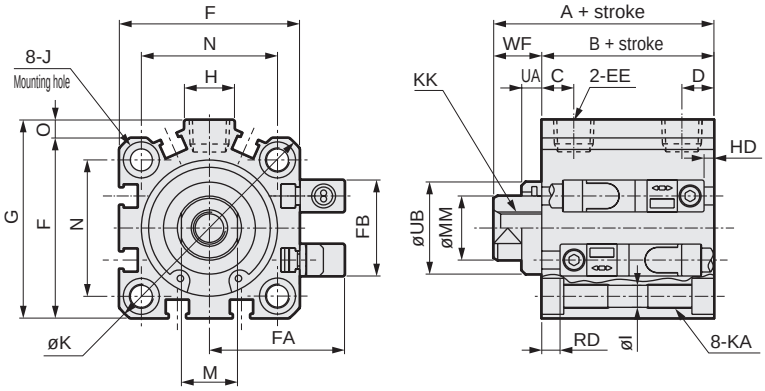

● Rod end male thread

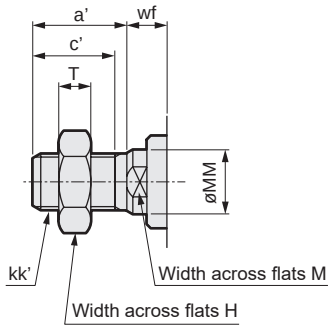

● SSD2-G1/G4-25 to 100 (without switch)

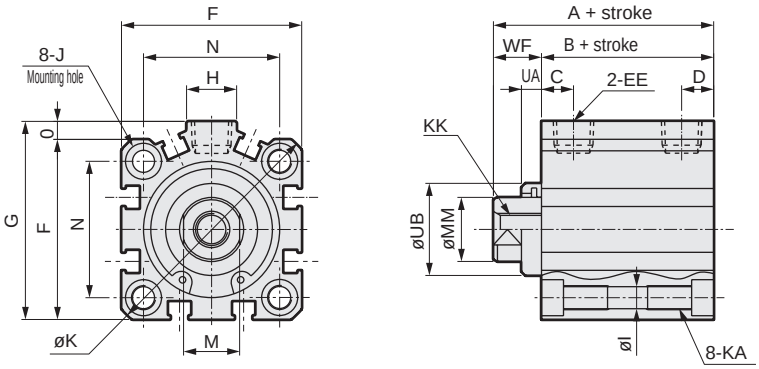

Code / Bore size (mm)	No switch			Common dimensions with switch											
	A *1		B *6	A *1		B *1	C *6	D *6	EE	F	FA	FB	G	H	I
	G1	G4		G1	G4										
ø25	37.5	37.5	32.5	47.5	47.5	42.5	11	6	M5	40	31.5	17	-	-	5.5
ø32	35(45)	40(50)	23(33)	45	50	33	8(10)	8(5.5)	Rc1/8 *5	45	33.5	24	49.5	12.5	5.5
ø40	41.5(51.5)	46.5(56.5)	29.5(39.5)	51.5	56.5	39.5	12(11.5)	8.5(8)	Rc1/8	52	37	31	57	15	5.5
ø50	43.5(53.5)	48.5(58.5)	30.5(40.5)	53.5	58.5	40.5	10.5	10.5	Rc1/4	64	43	32	71	18	6.9
ø63	49(59)	54(64)	36(46)	59	64	46	13	11	Rc1/4	77	49.5	32	84	23	8.7
ø80	58.5(68.5)	63.5(73.5)	43.5(53.5)	68.5	73.5	53.5	16	13	Rc3/8	98	60	32	104	31	10.5
ø100	70(80)	75(85)	53(63)	80	85	63	23	15	Rc3/8	117	69.5	32	123.5	38	10.5

Code / Bore size (mm)	Common dimensions with switch													Proximity T2YD	
	J	K	KA	KK	M	MM	N	O	UA		UB	WF		HD	RD *2
									G1	G4		G1	G4		
ø25	9 spot face depth 5.5	51	M6 depth 11	M6 depth 12	10	12	28	-	-	-	-	5	5	3	8.5
ø32	9 spot face depth 5.5	60	M6 depth 11	M8 depth 13	14	16	34	4.5	5	10	23 h9	12	17	3.5	8.5
ø40	9 spot face depth 5.5	69	M6 depth 11	M8 depth 13	14	16	40	5	5	10	28 h9	12	17	5.5	10.5
ø50	11 spot face depth 6.5	86	M8 depth 13	M10 depth 15	17	20	50	7	5	10	35 h9	13	18	6	11
ø63	14 spot face depth 9	103	M10 depth 25	M10 depth 15	17	20	60	7	5	10	35 h9	13	18	11	11.5
ø80	17.5 spot face depth 11	132	M12 depth 28	M16 depth 21	22	25	77	6	5	10	43 h9	15	20	16	14
ø100	17.5 spot face depth 11	156	M12 depth 28	M20 depth 27	27	30	94	6.5	5	10	59 h9	17	22	21.5	18

*1 : To calculate A+ stroke or B+ stroke when using custom stroke, apply the next longer standard stroke (instead of the custom stroke) to the stroke value. (Example) If the custom stroke is 7 mm, apply the standard stroke of 10 mm.
*2 : HD and RD dimensions for 5 mm stroke differ from these dimensions according to the setting.
*3 : For dimensions of individual accessories, refer to pages 1046 to 1049.
*4 : Dimensions in ( ) of codes A and B are for strokes of more than 50 mm.
*5 : The ø32 bore size with a 5 mm stroke and without a switch has a port size of M5.*6 : Dimensions in ( ) of codes C and D are when the value is for a 5 mm stroke without switch.

● Rod end male thread

Code / Bore size (mm)	a'	c'	H	kk'	M	MM	T	wf	
								G1	G4
ø25	17.5	15	17	M10x1.25	10	12	6	5	5
ø32	23.5	20.5	22	M14x1.5	14	16	8	10	15
ø40	23.5	20.5	22	M14x1.5	14	16	8	10	15
ø50	28.5	26	27	M18x1.5	17	20	11	10	15
ø63	28.5	26	27	M18x1.5	17	20	11	10	15
ø80	35.5	32.5	32	M22x1.5	22	25	13	13	18
ø100	35.5	32.5	41	M26x1.5	27	30	16	13	18

SCP*3
CMK2
CMA2
SCM
SCG
SCA2
SCS2
CKV2
CAV2/COVP/N2
SSD2
SSG
SSD
CAT
MDC2
MVC
SMG
MSD/MSDG
FC*
STK
SRL3
SRG3
SRM3
SRT3
MRL2
MRG2
SM-25
ShkAbs
FJ
FK
Spd Contr
Ending

Dimensions with mounting bracket

● Clevis bracket (CB)
SSD2-G1(L)/G4(L)-25 to 100 -CB

• ø25

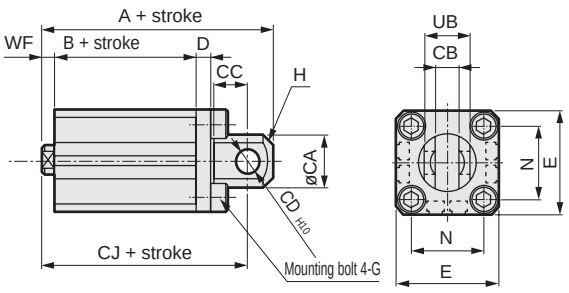

• ø32 to ø100

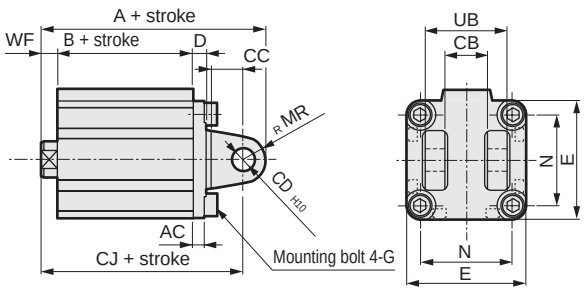

Rod end male thread

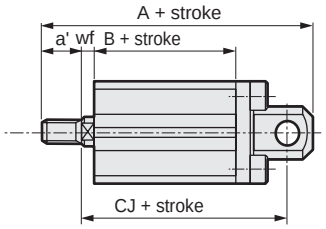

Rod end male thread

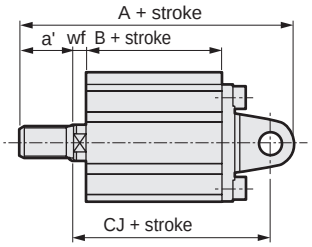

Code	Common dimensions												Female thread											
Bore size (mm)	AC	CA	CB	CC	CD	D	E	G	H	MR	N	UB	WF		No switch					With switch				
															A		B	CJ		A		B	CJ	
													G1	G4	G1	G4		G1	G4	G1	G4		G1	G4
ø25	-	24	10.2	14	10	5	40	M 6 x 16	C2	-	28	20	5	5	67.5	67.5	32.5	57.5	57.5	77.5	77.5	42.5	67.5	67.5
ø32	4.5	-	18.2	14	10	5	45	M 6 x 16	C4	10	34	36	12	17	65	70	23	55	60	75	80	33	65	70
ø40	5	-	18.2	14	10	6	52	M 6 x 16	C5	10	40	36	12	17	73.5	78.5	29.5	63.5	68.5	83.5	88.5	39.5	73.5	78.5
ø50	6	-	22.2	20	14	7	64	M 8 x 20	-	14	50	44	13	18	85.5	90.5	30.5	71.5	76.5	95.5	100.5	40.5	81.5	86.5
ø63	7	-	22.2	20	14	8	77	M 10 x 25	-	14	60	44	13	18	93	98	36	79	84	103	108	46	89	94
ø80	9	-	28.2	27	18	10	98	M 12 x 40	-	18	77	56	15	20	114.5	119.5	43.5	96.5	101.5	124.5	129.5	53.5	106.5	111.5
ø100	12	-	32.2	31	22	13	117	M 12 x 40	-	22	94	64	17	22	137	142	53	115	120	147	152	63	125	130

Code	Male thread												
Bore size (mm)	a'	wf		No switch					With switch				
				A		B	CJ		A		B	CJ	
		G1	G4	G1	G4		G1	G4	G1	G4		G1	G4
ø25	17.5	5	5	85	85	32.5	57.5	57.5	95	95	42.5	67.5	67.5
ø32	23.5	10	15	86.5	91.5	23	53	58	96.5	101.5	33	63	68
ø40	23.5	10	15	95	100	29.5	61.5	66.5	105	110	39.5	71.5	76.5
ø50	28.5	10	15	111	116	30.5	68.5	73.5	121	126	40.5	78.5	83.5
ø63	28.5	10	15	118.5	123.5	36	76	81	128.5	133.5	46	86	91
ø80	35.5	13	18	148	153	43.5	94.5	99.5	158	163	53.5	104.5	109.5
ø100	35.5	13	18	168.5	173.5	53	111	116	178.5	183.5	63	121	126

Dimensions with mounting bracket

● Head side flange (FB)
SSD2-G1(L)/G4(L)-25 to 100 -FB

• ø25

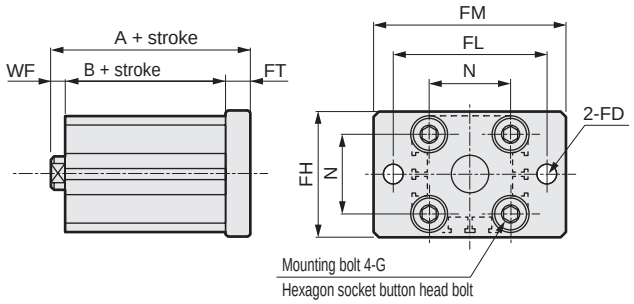

• ø32 to ø100

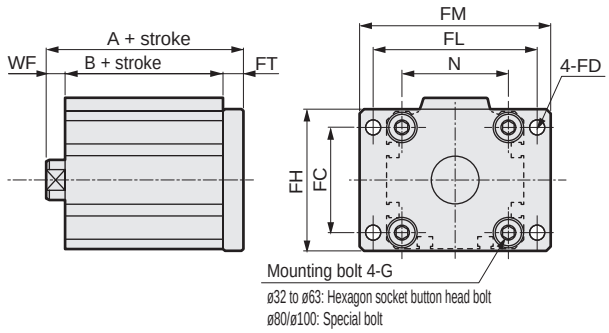

Rod end male thread

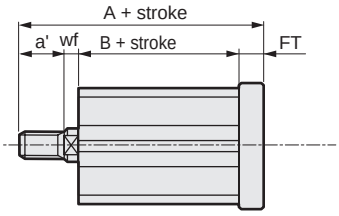

Rod end male thread

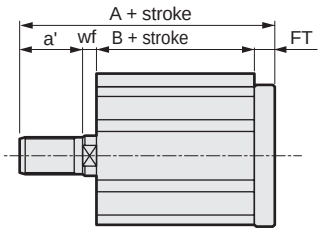

Code / Bore size (mm)	Common dimensions								Female thread							
	FC	FD	FH	FL	FM	FT	N	G	WF		No switch			With switch		
											A		B	A		B
									G1	G4	G1	G4		G1	G4	
ø25	-	6.6	42	52	64	8	28	M 6 x 16	5	5	45.5	45.5	32.5	55.5	55.5	42.5
ø32	34	5.5	48	56	65	8	34	M 6 x 16	12	17	43	48	23	53	58	33
ø40	40	5.5	54	62	72	8	40	M 6 x 16	12	17	49.5	54.5	29.5	59.5	64.5	39.5
ø50	50	6.6	67	76	89	9	50	M 8 x 20	13	18	52.5	57.5	30.5	62.5	67.5	40.5
ø63	60	9	80	92	108	9	60	M 10 x 25	13	18	58	63	36	68	73	46
ø80	77	11	99	116	134	11	77	M 12 x 40	15	20	69.5	74.5	43.5	79.5	84.5	53.5
ø100	94	11	117	136	154	11	94	M 12 x 40	17	22	81	86	53	91	96	63

Code / Bore size (mm)	Male thread								
	a'	wf		No switch			With switch		
				A		B	A		B
		G1	G4	G1	G4		G1	G4	
ø25	17.5	5	5	63	63	32.5	73	73	42.5
ø32	23.5	10	15	64.5	69.5	23	74.5	79.5	33
ø40	23.5	10	15	71	76	29.5	81	86	39.5
ø50	28.5	10	15	78	83	30.5	88	93	40.5
ø63	28.5	10	15	83.5	88.5	36	93.5	98.5	46
ø80	35.5	13	18	103	108	43.5	113	118	53.5
ø100	35.5	13	18	112.5	117.5	53	122.5	127.5	63

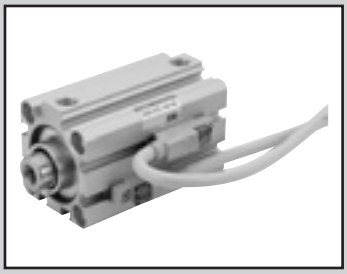

Compact cylinder
double acting/single rod/high load/coil scraper

Compact cylinder
double acting/single rod/high load/anti-spatter adherence

SSD2-KG1 Series SSD2-KG4 Series

● Bore size: ø25/ø32/ø40/ø50/ø63/ø80/ø100

JIS symbol 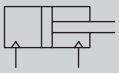

RoHS CAD

Specifications

Item	SSD2-KG1/KG4 SSD2-KG1L/KG4L (with switch)						
Bore size mm	ø25	ø32	ø40	ø50	ø63	ø80	ø100
Actuation	Double acting						
Working fluid	Compressed air						
Max. working pressure MPa	1.0 (≈150 psi, 10 bar)						
Min. working pressure MPa	0.15 (≈22 psi, 1.5 bar)				0.1 (≈15 psi, 1 bar)		
Proof pressure MPa	1.6 (≈230 psi, 16 bar)						
Ambient temperature °C	-10 (14°F) to 60 (140°F) (no freezing)						
Port size	M5	Rc1/8		Rc1/4		Rc3/8	
Stroke tolerance mm	$^{+2.0}_{0}$						
Working piston speed mm/s	50 to 500				50 to 300		
Cushion	Rubber cushion						
Lubrication	Not required (use turbine oil ISO VG32 if necessary for lubrication)						
Allowable absorbed energy J	0.16	0.40	0.63	0.98	1.56	2.51	3.92

Stroke

Bore size (mm)	Standard stroke (mm)	Max. stroke (mm)	Min. stroke (mm)
ø25	5/10/15/20/25/30/35/40/45/50	50	1(10) The value in ( ) is for types with one or two switches.
ø32	5/10/15/20/25/30/35/40/45/50/75/100	100	
ø40			
ø50	10/15/20/25 30/35/40/45/50 75/100		
ø63			
ø80			
ø100			

*1: The custom stroke is available in 1 mm increments.
*2: Dimensions of custom stroke (example: 64 mm stroke) are the same as the next stroke up (example: 75 mm stroke).

Custom stroke

● SSD2-KG1, KG4 Series

Item	Standard products Standard stroke body with spacer	
Model No.	Refer to How to order.	
Description	A spacer is added to the standard stroke body to adjust the stroke in 1 mm increments.	
Stroke range	Bore size	Stroke range
	25	1 to 49
	32 to 100	1 to 99
Example of model No.	Model No.: SSD2-KG1-32-38 A +2 mm spacer is added to the SSD2-KG1-32-40 standard cylinder to create 38 mm stroke. B + stroke is 83mm.	

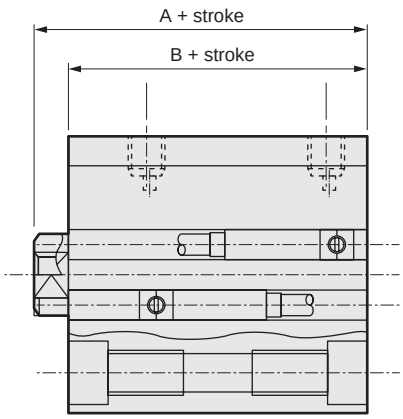

Switch specifications

Item	2-wire proximity
	T2YD/T2YDT
Applications	Dedicated for programmable controller
Indicator	Red/green LED (Lit when ON)
Load voltage	24 VDC ±10%
Load current	5 to 20 mA
Internal voltage drop	6 V or less
Leakage current	1.0 mA or less
Output delay time *1 (Delay ON, delay OFF)	30 to 60 ms
Lead wire length	1 m (oil resistant vinyl cabtyre cable ø 6, 0.5 mm^2 x 2-conductor) *2, *3
Insulation resistance	100 MΩ and over at 500 VDC megger
Withstand voltage	No failure after 1 minute of 1,000 VAC application.
Max. shock resistance	980 m/s^2
Ambient temperature	-10 to +60°C
Degree of protection	JIS C0920 (water-tight), IEC standards IP67, oil resistance
Weight g	1 m:61 3 m:166 5 m:272

*1: Indicates the time from magnetic sensor detection of the piston magnet until switch output.
*2: 3 m and 5 m lead wires are available as options.
*3: Flame-resistant lead wires are available as options.
*4: This switch cannot be used in DC environments.

Cylinder weight table (the weight of the switches is when there are 2 cylinder switches.)

(Unit: g)

Stroke (mm)	5		10		15		20		25		30		35		40		45		50		75		100	
Bore size (mm)	No switch	Switch	No switch	Switch	No switch	Switch	No switch	Switch	No switch	Switch	No switch	Switch	No switch	Switch	No switch	Switch	No switch	Switch	No switch	Switch	No switch	Switch	No switch	Switch
ø25	146	237	162	253	178	269	194	285	209	300	226	317	242	333	258	349	274	365	290	381	-	-	-	-
ø32	228	342	249	363	270	384	292	406	314	428	336	450	358	472	379	493	401	515	422	536	530	644	637	751
ø40	318	461	345	488	372	515	398	541	424	567	451	594	478	621	504	647	531	674	557	700	690	833	822	965
ø50	-	-	549	743	591	785	634	828	677	871	718	912	760	954	802	996	844	1038	886	1080	1096	1290	1306	1500
ø63	-	-	782	1061	837	1116	892	1171	948	1227	1003	1282	1058	1337	1113	1392	1168	1447	1223	1502	1498	1777	1773	2052
ø80	-	-	1382	1795	1469	1882	1555	1968	1642	2055	1729	2142	1816	2229	1902	2315	1989	2402	2075	2488	2508	2921	2940	3353
ø100	-	-	2029	2596	2143	2710	2257	2824	2371	2938	2484	3051	2598	3165	2712	3279	2826	3393	2940	3507	3510	4077	4080	4647

Theoretical thrust table

(Unit: N)

Bore size (mm)	Operating direction	Working pressure MPa										
		0.1	0.15	0.2	0.3	0.4	0.5	0.6	0.7	0.8	0.9	1.0
ø25	Push	-	73.6	98.2	$1.47x10^2$	$1.96x10^2$	$2.45x10^2$	$2.95x10^2$	$3.44x10^2$	$3.93x10^2$	$4.42x10^2$	$4.91x10^2$
	Pull	-	56.7	75.6	$1.13x10^2$	$1.51x10^2$	$1.89x10^2$	$2.27x10^2$	$2.64x10^2$	$3.02x10^2$	$3.40x10^2$	$3.78x10^2$
ø32	Push	-	$1.21x10^2$	$1.61x10^2$	$2.41x10^2$	$3.22x10^2$	$4.02x10^2$	$4.83x10^2$	$5.63x10^2$	$6.43x10^2$	$7.24x10^2$	$8.04x10^2$
	Pull	-	90.5	$1.21x10^2$	$1.81x10^2$	$2.41x10^2$	$3.02x10^2$	$3.62x10^2$	$4.22x10^2$	$4.83x10^2$	$5.43x10^2$	$6.03x10^2$
ø40	Push	-	$1.88x10^2$	$2.51x10^2$	$3.77x10^2$	$5.03x10^2$	$6.28x10^2$	$7.54x10^2$	$8.80x10^2$	$1.01x10^3$	$1.13x10^3$	$1.26x10^3$
	Pull	-	$1.58x10^2$	$2.11x10^2$	$3.17x10^2$	$4.22x10^2$	$5.28x10^2$	$6.33x10^2$	$7.39x10^2$	$8.44x10^2$	$9.50x10^2$	$1.06x10^3$
ø50	Push	-	$2.95x10^2$	$3.93x10^2$	$5.89x10^2$	$7.85x10^2$	$9.82x10^2$	$1.18x10^3$	$1.37x10^3$	$1.57x10^3$	$1.77x10^3$	$1.96x10^3$
	Pull	-	$2.47x10^2$	$3.30x10^2$	$4.95x10^2$	$6.60x10^2$	$8.25x10^2$	$9.90x10^2$	$1.15x10^3$	$1.32x10^3$	$1.48x10^3$	$1.65x10^3$
ø63	Push	$3.12x10^2$	$4.68x10^2$	$6.23x10^2$	$9.35x10^2$	$1.25x10^3$	$1.56x10^3$	$1.87x10^3$	$2.18x10^3$	$2.49x10^3$	$2.81x10^3$	$3.12x10^3$
	Pull	$2.80x10^2$	$4.20x10^2$	$5.61x10^2$	$8.41x10^2$	$1.12x10^3$	$1.40x10^3$	$1.68x10^3$	$1.96x10^3$	$2.24x10^3$	$2.52x10^3$	$2.80x10^3$
ø80	Push	$5.03x10^2$	$7.54x10^2$	$1.01x10^3$	$1.51x10^3$	$2.01x10^3$	$2.51x10^3$	$3.02x10^3$	$3.52x10^3$	$4.02x10^3$	$4.52x10^3$	$5.03x10^3$
	Pull	$4.54x10^2$	$6.80x10^2$	$9.07x10^2$	$1.36x10^3$	$1.81x10^3$	$2.27x10^3$	$2.72x10^3$	$3.17x10^3$	$3.63x10^3$	$4.08x10^3$	$4.54x10^3$
ø100	Push	$7.85x10^2$	$1.18x10^3$	$1.57x10^3$	$2.36x10^3$	$3.14x10^3$	$3.93x10^3$	$4.71x10^3$	$5.50x10^3$	$6.28x10^3$	$7.07x10^3$	$7.85x10^3$
	Pull	$7.15x10^2$	$1.07x10^3$	$1.43x10^3$	$2.14x10^3$	$2.86x10^3$	$3.57x10^3$	$4.29x10^3$	$5.00x10^3$	$5.72x10^3$	$6.43x10^3$	$7.15x10^3$

SCP*3
CMK2
CMA2
SCM
SCG
SCA2
SCS2
CKV2
CAV2/COVP/N2
SSD2
SSG
SSD
CAT
MDC2
MVC
SMG
MSD/MSDG
FC*
STK
SRL3
SRG3
SRM3
SRT3
MRL2
MRG2
SM-25
ShkAbs
FJ
FK
Spd Contr
Ending

How to order

No switch (without magnet for switch)

SSD2-KG4 - 32 - 10 ———— N - LB - I

With switch (built-in magnet for switch)

SSD2-KG4L - 32 - 10 - T2YD - R - N - LB - I

- Ⓐ Model No.
- Ⓑ Bore size
- Ⓒ Stroke
- Ⓓ Switch model No.
- Ⓔ Switch quantity
- Ⓕ Option
- Ⓖ Mounting bracket *1
- Ⓗ Accessory *2

Code	Description
Ⓐ Model No.	
SSD2-KG1	Double acting/single rod/high load/coil scraper
SSD2-KG1L	Double acting/single rod/high load/coil scraper/with switch
SSD2-KG4	Double acting/single rod/high load/anti-spatter adherence
SSD2-KG4L	Double acting/single rod/high load/anti-spatter adherence/with switch

Ⓑ Bore size (mm)	
25	ø25
32	ø32
40	ø40
50	ø50
63	ø63
80	ø80
100	ø100

Ⓒ Stroke (mm)

Refer to the stroke table on the following page.

Ⓓ Switch model No.

Lead wire Straight	Lead wire L-shaped	Contact	Voltage	Indicator	Lead wire
T2YD*	-	Proximity	DC	2-color LED for AC magnetic field	2-wire
T2YDT*	-				

*** Lead wire length**	
Blank	1 m (standard)
3	3 m (option)
5	5 m (option)

Ⓔ Switch quantity	
R	1 on rod side
H	1 on head side
D	2

Ⓕ Option	
Blank	Rod end female thread
N	Rod end male thread

Ⓖ Mounting bracket	
Blank	Without mounting bracket
LB	Axial foot (made-to-order product)
CB	Clevis bracket (pin and snap ring included)
FA	Rod side flange (made-to-order product)
FB	Head side flange

Ⓗ Accessory (available when rod end male thread "N" is selected)	
I	Rod eye
Y	Rod clevis (pin and snap ring included)

⚠ Precautions for model No. selection

*1: The mounting bracket is included at shipment.
*2: "I" and "Y" cannot be selected together.

[Example of model No.]

SSD2-KG4L-32-10-T2YD-R-N

Model: Compact cylinder
Double acting, high load, anti-spatter adherence
Ⓑ Bore size : ø32 mm
Ⓒ Stroke : 10 mm
Ⓓ Switch model No.: Proximity switch for AC magnetic field
T2YD, lead wire length 1 m
Ⓔ Switch quantity : 1 on rod side
Ⓕ Option : Rod end male thread

How to order switch

SW - T2YD

Switch model No.
(Item Ⓓ on page 976)

[Stroke table]

Stroke (mm)		Applicable bore size						
		25	32	40	50	63	80	100
Standard stroke	5	●	●	●				
	10	●	●	●	●	●	●	●
	15	●	●	●	●	●	●	●
	20	●	●	●	●	●	●	●
	25	●	●	●	●	●	●	●
	30	●	●	●	●	●	●	●
	35	●	●	●	●	●	●	●
	40	●	●	●	●	●	●	●
	45	●	●	●	●	●	●	●
	50	●	●	●	●	●	●	●
	75		●	●	●	●	●	●
	100		●	●	●	●	●	●
Min. stroke (mm) *1		1						
Max. stroke (mm)		50	100					
Custom stroke *2		In 1 mm increments						

*1: Less than 10 mm stroke is not available.
*2: The total length is the same as that of the next longer standard stroke.

How to order mounting bracket

Bore size (mm) / Mounting bracket	ø25	ø32	ø40	ø50	ø63	ø80	ø100
Flange (FB)	SSD2-FA-25	SSD2-G1-FA-32	SSD2-FA-40	SSD2-FA-50	SSD2-FA-63	SSD2-FA-80	SSD2-FA-100
Clevis bracket (CB)	SSD2-CB-25	SSD2-CB-32	SSD2-CB-40	SSD2-CB-50	SSD2-CB-63	SSD2-CB-80	SSD2-CB-100

*1: The foot mounting bracket is provided as 2 pcs./set.

Internal structure and parts list

● SSD2-KG1L/KG4L-25
(double acting/single rod high load/anti-spatter adherence/with switch)

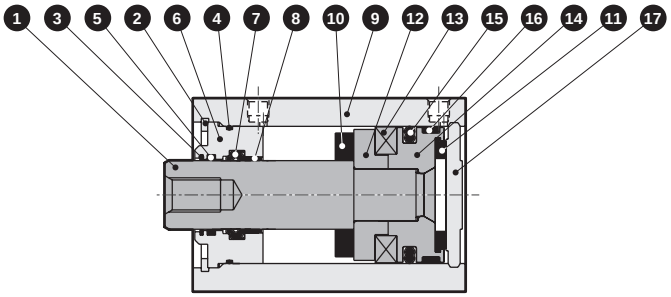

● SSD2-KG1L/KG4L-32 to 50
(double acting/single rod high load/anti-spatter adherence/with switch)

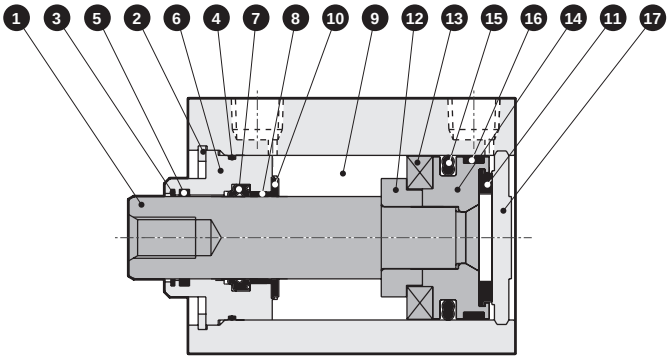

● SSD2-KG1/KG4-25
(double acting/single rod/high load/anti-spatter adherence)

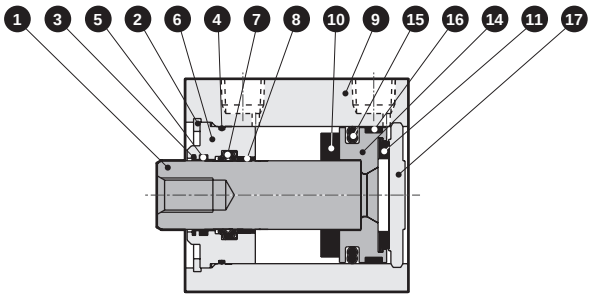

● SSD2-KG1/KG4-32 to 50
(double acting/single rod/high load/anti-spatter adherence)

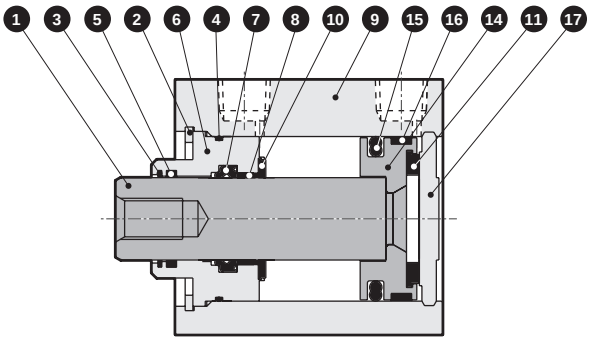

No.	Part name	Material	Remarks
1	Piston rod	ø25: Stainless steel ø32 to ø50: Steel	Industrial chrome plating
2	C-snap ring for hole	Steel	Zinc phosphate
3	Coil scraper	Phosphor bronze	
4	Rod metal gasket	Nitrile rubber	
5	Lube keeping structure	Special rubber	G4 only
6	Rod metal	Special aluminum	Alumite
7	Rod packing	Nitrile rubber	
8	Bush	Oiles drymet	
9	Body	Aluminum alloy	Hard alumite

No.	Part name	Material	Remarks
10	Cushion rubber R	Urethane rubber	
11	Cushion rubber H	Urethane rubber	
12	Spacer	Aluminum alloy	ø25, ø32: Chromate
13	Magnet	Plastic	
14	Piston	Aluminum alloy	Chromate
15	Piston packing	Nitrile rubber	
16	Wear ring	Polyacetal resin	
17	Cover	ø25: Stainless steel ø32 to 50: Aluminum alloy	ø32 to ø50: Alumite

Repair parts list

Part name / Bore size (mm)	Kit No.	Repair parts No.
ø25	SSD2-KG1-25K	3 4 7 10 11 15 16
ø32	SSD2-KG1-32K	
ø40	SSD2-KG1-40K	
ø50	SSD2-KG1-50K	

Internal structure and parts list

● SSD2-KG1L/KG4L-63 to 100 (double acting/single rod high load/anti-spatter adherence/with switch)

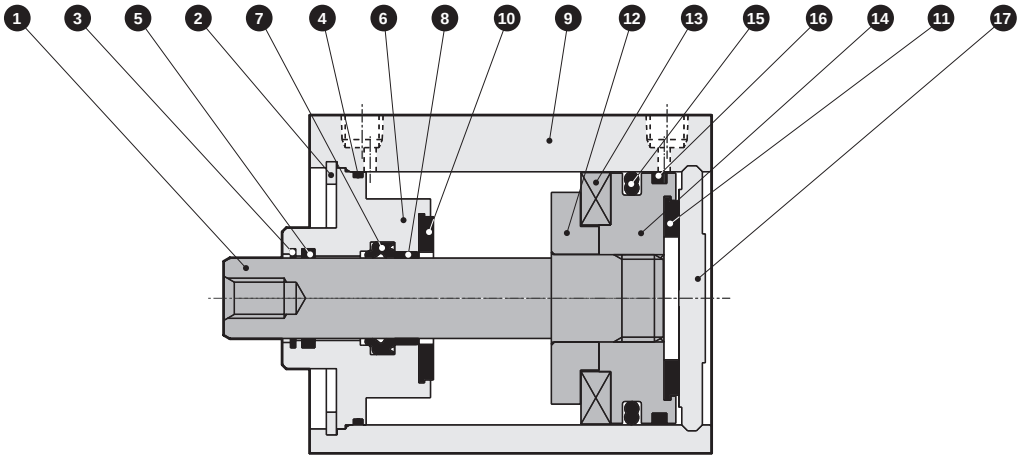

● SSD2-KG1/KG4-63 to 100 (double acting/single rod high load/anti-spatter adherence)

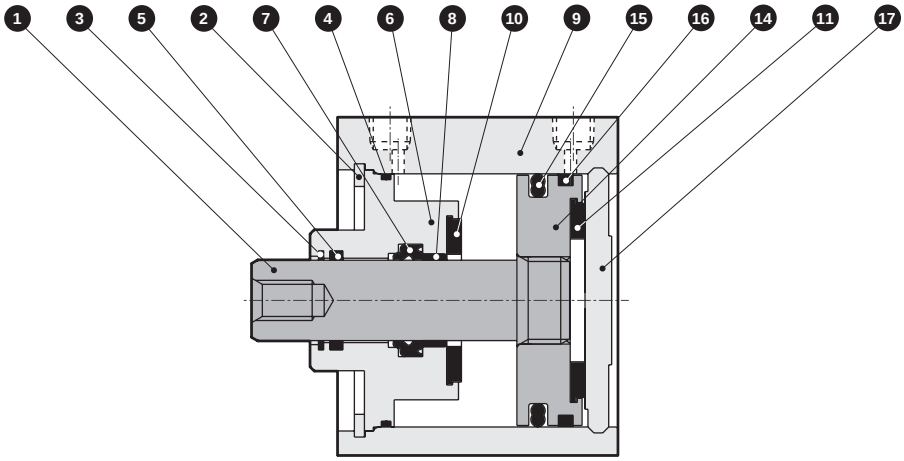

No.	Part name	Material	Remarks	No.	Part name	Material	Remarks
1	Piston rod	Steel	Industrial chrome plating	10	Cushion rubber R	Urethane rubber	
2	C-snap ring for hole	Steel	Zinc phosphate	11	Cushion rubber H	Urethane rubber	
3	Coil scraper	Phosphor bronze		12	Spacer	Aluminum alloy	Chromate
4	Rod metal gasket	Nitrile rubber		13	Magnet	Plastic	
5	Lube keeping structure	Special rubber	G4 only	14	Piston	Aluminum alloy	Chromate
6	Rod metal	Aluminum alloy	Chromate	15	Piston packing	Nitrile rubber	
7	Rod packing	Nitrile rubber		16	Wear ring	Polyacetal resin	
8	Bush	Oiles drymet		17	Cover	Aluminum alloy	Alumite
9	Body	Aluminum alloy	Hard alumite				

Repair parts list

Part name / Bore size (mm)	Kit No.	Repair parts No.
ø63	SSD2-KG1-63K	3 4 7 10 11 15 16
ø80	SSD2-KG1-80K	
ø100	SSD2-KG1-100K	

Dimensions

● SSD2-KG1L/KG4L-25 to 100 (with switch, T0H/V, T5H/V, T2H/V, T3H/V)

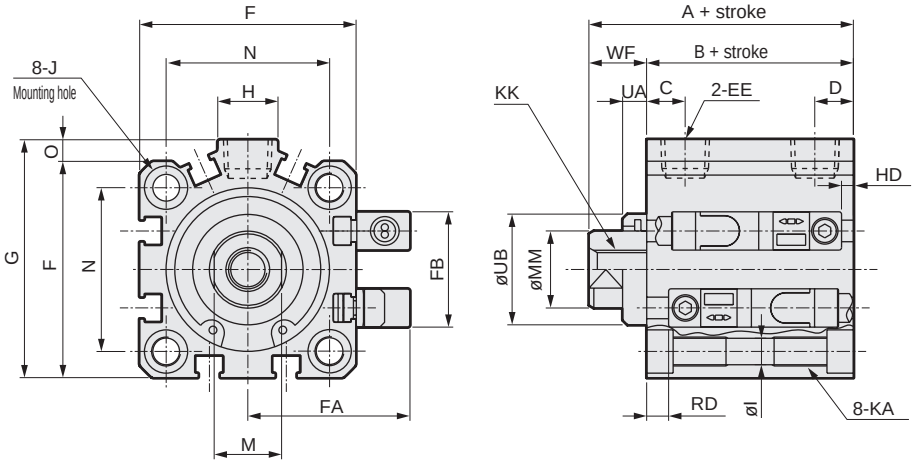

● Rod end male thread

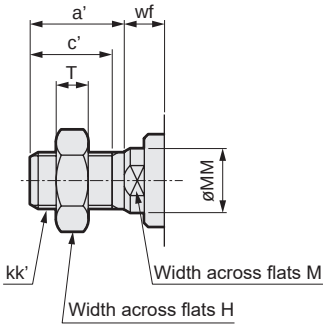

Code / Bore size (mm)	Dimensions with switch														
	A *1		B *1	C	D	EE	F	FA	FB	G	H	I	J	K	KA
	G1	G4													
ø25	52.5	52.5	47.5	11	6	M5	40	31.5	17	-	-	5.5	9 spot face depth 5.5	51	M6 depth 11
ø32	55	60	43	8	8	Rc1/8	45	33.5	24	49.5	12.5	5.5	9 spot face depth 5.5	60	M6 depth 11
ø40	61.5	66.5	49.5	12	8.5	Rc1/8	52	37	31	57	15	5.5	9 spot face depth 5.5	69	M6 depth 11
ø50	63.5	68.5	50.5	10.5	10.5	Rc1/4	64	43	32	71	18	6.9	11 spot face depth 6.5	86	M8 depth 13
ø63	69	74	56	13	11	Rc1/4	77	49.5	32	84	23	8.7	14 spot face depth 9	103	M10 depth 25
ø80	78.5	83.5	63.5	16	13	Rc3/8	98	60	32	104	31	10.5	17.5 spot face depth 11	132	M12 depth 28
ø100	90	95	73	23	15	Rc3/8	117	69.5	32	123.5	38	10.5	17.5 spot face depth 11	156	M12 depth 28

Code / Bore size (mm)	Dimensions with switch										Proximity T2YD	
	KK	M	MM	N	O	UA		UB	WF		HD	RD *2
						G1	G4		G1	G4		
ø25	M6 depth 12	10	12	28	-	-	-	-	5	5	2	20
ø32	M8 depth 13	14	16	34	4.5	5	10	23 h9	12	17	4.5	20.5
ø40	M8 depth 13	14	16	40	5	5	10	28 h9	12	17	8	23.5
ø50	M10 depth 15	17	20	50	7	5	10	35 h9	13	18	9	23.5
ø63	M10 depth 15	17	20	60	7	5	10	35 h9	13	18	13	24
ø80	M16 depth 21	22	25	77	6	5	10	43 h9	15	20	19	26.5
ø100	M20 depth 27	27	30	94	6.5	5	10	59 h9	17	22	24.5	30.5

*1 : To calculate A+ stroke or B+ stroke when using custom stroke, apply the next longer standard stroke (instead of the custom stroke) to the stroke value. (Example) If the custom stroke is 7 mm, apply the standard stroke of 10 mm.
*2 : HD and RD dimensions for 5 mm stroke differ from these dimensions according to the setting.
*3 : For dimensions of individual accessories, refer to pages 1046 to 1049.

● Rod end male thread

Code / Bore size (mm)	a'	c'	H	kk'	M	MM	T	wf	
								G1	G4
ø25	17.5	15	17	M10x1.25	10	12	6	5	5
ø32	23.5	20.5	22	M14x1.5	14	16	8	10	15
ø40	23.5	20.5	22	M14x1.5	14	16	8	10	15
ø50	28.5	26	27	M18x1.5	17	20	11	10	15
ø63	28.5	26	27	M18x1.5	17	20	11	10	15
ø80	35.5	32.5	32	M22x1.5	22	25	13	13	18
ø100	35.5	32.5	41	M26x1.5	27	30	16	13	18

Dimensions

● SSD2-KG1/KG4-25 to 100 (without switch)

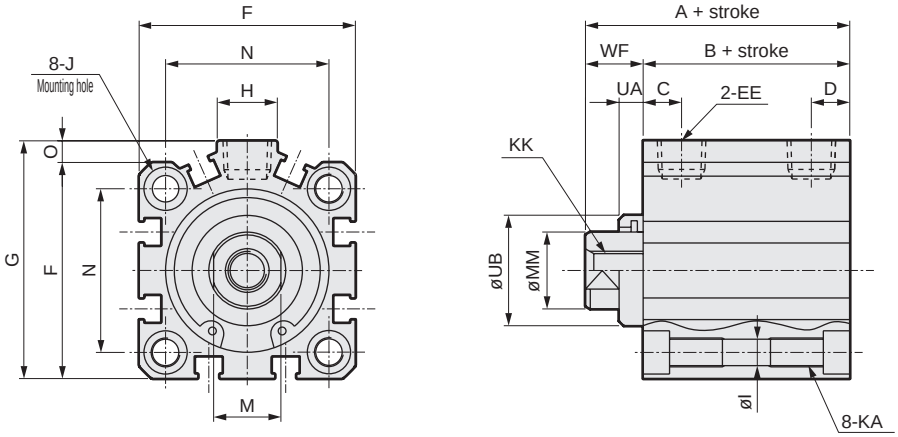

● Rod end male thread

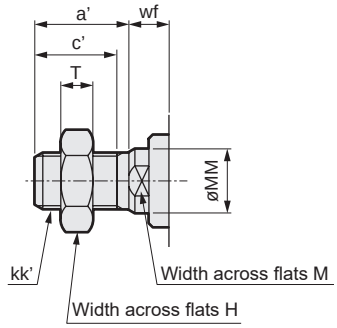

Code / Bore size (mm)	Dimensions without switch												
	A *1, *4		B *1, *4	C	D	EE *5	F	G	H	I	J	K	KA
	G1	G4											
ø25	42.5	42.5	37.5	11	6	M5	40	-	-	5.5	9 spot face depth 5.5	51	M6 depth 11
ø32	45(55)	50(60)	33(43)	10	5.5	Rc1/8	45	49.5	12.5	5.5	9 spot face depth 5.5	60	M6 depth 11
ø40	51.5(61.5)	56.5(66.5)	39.5(49.5)	11.5	8	Rc1/8	52	57	15	5.5	9 spot face depth 5.5	69	M6 depth 11
ø50	53.5(63.5)	58.5(68.5)	40.5(50.5)	10.5	10.5	Rc1/4	64	71	18	6.9	11 spot face depth 6.5	86	M8 depth 13
ø63	59(69)	64(74)	46(56)	13	11	Rc1/4	77	84	23	8.7	14 spot face depth 9	103	M10 depth 25
ø80	68.5(78.5)	73.5(83.5)	53.5(63.5)	16	13	Rc3/8	98	104	31	10.5	17.5 spot face depth 11	132	M12 depth 28
ø100	80(90)	85(95)	63(73)	23	15	Rc3/8	117	123.5	38	10.5	17.5 spot face depth 11	156	M12 depth 28

Code / Bore size (mm)	Dimensions without switch									
	KK	M	MM	N	O	UA		UB	WF	
						G1	G4		G1	G4
ø25	M6 depth 12	10	12	28	-	-	-	-	5	5
ø32	M8 depth 13	14	16	34	4.5	5	10	23 h9	12	17
ø40	M8 depth 13	14	16	40	5	5	10	28 h9	12	17
ø50	M10 depth 15	17	20	50	7	5	10	35 h9	13	18
ø63	M10 depth 15	17	20	60	7	5	10	35 h9	13	18
ø80	M16 depth 21	22	25	77	6	5	10	43 h9	15	20
ø100	M20 depth 27	27	30	94	6.5	5	10	59 h9	17	22

*1 : To calculate A+ stroke or B+ stroke when using custom stroke, apply the next longer standard stroke (instead of the custom stroke) to the stroke value. (Example) If the custom stroke is 7 mm, apply the standard stroke of 10 mm.
*2 : HD and RD dimensions for 5 mm stroke differ from these dimensions according to the setting.
*3 : For dimensions of individual accessories, refer to pages 1046 to 1049.
*4 : Dimensions in ( ) of codes A and B are for strokes of more than 50 mm.
*5 : The ø32 bore size with a 5 mm stroke and without a switch has a port size of M5.

● Rod end male thread

Code / Bore size (mm)	a'	c'	H	kk'	M	MM	T	wf	
								G1	G4
ø25	17.5	15	17	M10x1.25	10	12	6	5	5
ø32	23.5	20.5	22	M14x1.5	14	16	8	10	15
ø40	23.5	20.5	22	M14x1.5	14	16	8	10	15
ø50	28.5	26	27	M18x1.5	17	20	11	10	15
ø63	28.5	26	27	M18x1.5	17	20	11	10	15
ø80	35.5	32.5	32	M22x1.5	22	25	13	13	18
ø100	35.5	32.5	41	M26x1.5	27	30	16	13	18

SCP*3
CMK2
CMA2
SCM
SCG
SCA2
SCS2
CKV2
CAV2/COVP/N2
SSD2
SSG
SSD
CAT
MDC2
MVC
SMG
MSD/MSDG
FC*
STK
SRL3
SRG3
SRM3
SRT3
MRL2
MRG2
SM-25
ShkAbs
FJ
FK
Spd Contr
Ending

Dimensions with mounting bracket

● Clevis bracket (CB)
SSD2-G1(L)/G4(L)-25 to 100 -CB

• ø25

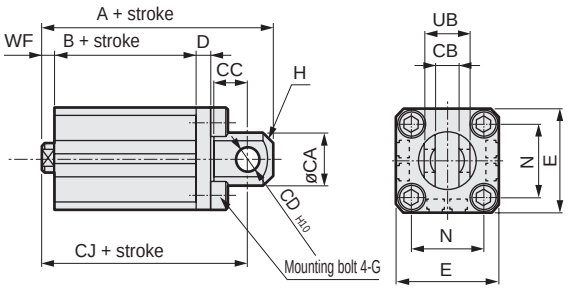

• ø32 to ø100

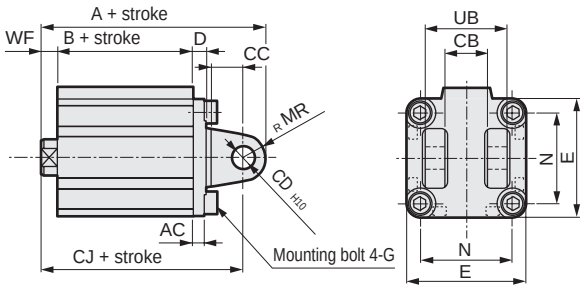

Rod end male thread

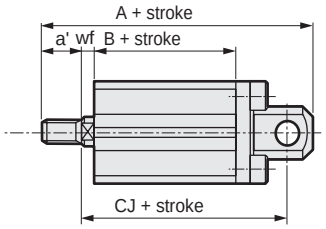

Rod end male thread

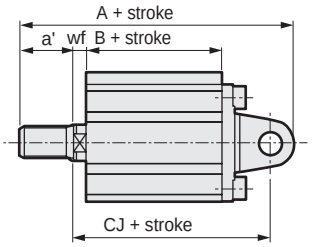

Code	Common dimensions												Female thread											
Bore size (mm)	AC	CA	CB	CC	CD	D	E	G	H	MR	N	UB	WF		No switch					With switch				
															A		B	CJ		A		B	CJ	
													G1	G4	G1	G4		G1	G4	G1	G4		G1	G4
ø25	-	24	10.2	14	10	5	40	M 6 x 16	C2	-	28	20	5	5	67.5	67.5	32.5	57.5	57.5	77.5	77.5	42.5	67.5	67.5
ø32	4.5	-	18.2	14	10	5	45	M 6 x 16	C4	10	34	36	12	17	65	70	23	55	60	75	80	33	65	70
ø40	5	-	18.2	14	10	6	52	M 6 x 16	C5	10	40	36	12	17	73.5	78.5	29.5	63.5	68.5	83.5	88.5	39.5	73.5	78.5
ø50	6	-	22.2	20	14	7	64	M 8 x 20	-	14	50	44	13	18	85.5	90.5	30.5	71.5	76.5	95.5	100.5	40.5	81.5	86.5
ø63	7	-	22.2	20	14	8	77	M 10 x 25	-	14	60	44	13	18	93	98	36	79	84	103	108	46	89	94
ø80	9	-	28.2	27	18	10	98	M 12 x 40	-	18	77	56	15	20	114.5	119.5	43.5	96.5	101.5	124.5	129.5	53.5	106.5	111.5
ø100	12	-	32.2	31	22	13	117	M 12 x 40	-	22	94	64	17	22	137	142	53	115	120	147	152	63	125	130

Code	Male thread												
Bore size (mm)	a'	wf		No switch					With switch				
				A		B	CJ		A		B	CJ	
		G1	G4	G1	G4		G1	G4	G1	G4		G1	G4
ø25	17.5	5	5	85	85	32.5	57.5	57.5	95	95	42.5	67.5	67.5
ø32	23.5	10	15	86.5	91.5	23	53	58	96.5	101.5	33	63	68
ø40	23.5	10	15	95	100	29.5	61.5	66.5	105	110	39.5	71.5	76.5
ø50	28.5	10	15	111	116	30.5	68.5	73.5	121	126	40.5	78.5	83.5
ø63	28.5	10	15	118.5	123.5	36	76	81	128.5	133.5	46	86	91
ø80	35.5	13	18	148	153	43.5	94.5	99.5	158	163	53.5	104.5	109.5
ø100	35.5	13	18	168.5	173.5	53	111	116	178.5	183.5	63	121	126

Dimensions with mounting bracket

● Head side flange (FB)
SSD2-G1(L)/G4(L)-25 to 100 -FB

• ø25

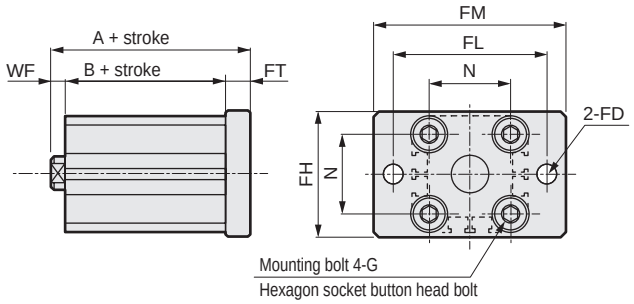

• ø32 to ø100

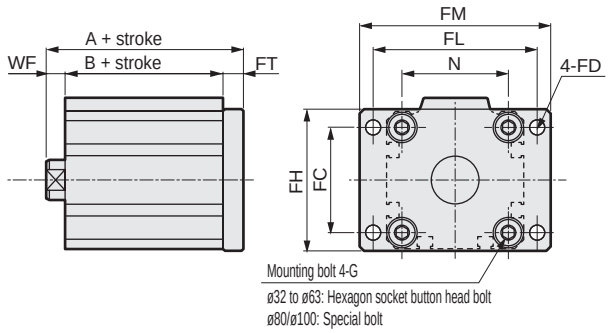

Rod end male thread

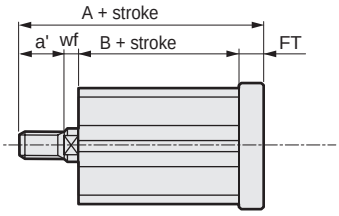

Rod end male thread

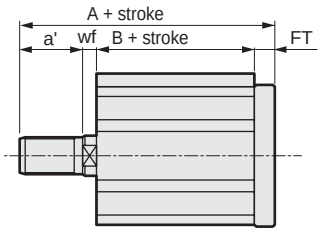

Code / Bore size (mm)	Common dimensions								Female thread							
	FC	FD	FH	FL	FM	FT	N	G	WF		No switch			With switch		
											A		B	A		B
									G1	G4	G1	G4		G1	G4	
ø25	-	6.6	42	52	64	8	28	M 6 x 16	5	5	45.5	45.5	32.5	55.5	55.5	42.5
ø32	34	5.5	48	56	65	8	34	M 6 x 16	12	17	43	48	23	53	58	33
ø40	40	5.5	54	62	72	8	40	M 6 x 16	12	17	49.5	54.5	29.5	59.5	64.5	39.5
ø50	50	6.6	67	76	89	9	50	M 8 x 20	13	18	52.5	57.5	30.5	62.5	67.5	40.5
ø63	60	9	80	92	108	9	60	M 10 x 25	13	18	58	63	36	68	73	46
ø80	77	11	99	116	134	11	77	M 12 x 40	15	20	69.5	74.5	43.5	79.5	84.5	53.5
ø100	94	11	117	136	154	11	94	M 12 x 40	17	22	81	86	53	91	96	63

Code / Bore size (mm)	Male thread								
	a'	wf		No switch			With switch		
				A		B	A		B
		G1	G4	G1	G4		G1	G4	
ø25	17.5	5	5	63	63	32.5	73	73	42.5
ø32	23.5	10	15	64.5	69.5	23	74.5	79.5	33
ø40	23.5	10	15	71	76	29.5	81	86	39.5
ø50	28.5	10	15	78	83	30.5	88	93	40.5
ø63	28.5	10	15	83.5	88.5	36	93.5	98.5	46
ø80	35.5	13	18	103	108	43.5	113	118	53.5
ø100	35.5	13	18	112.5	117.5	53	122.5	127.5	63

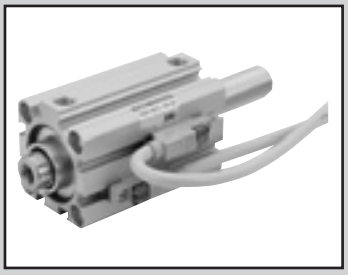

Compact cylinder double acting/ double rod/coil scraper

SSD2-DG1 Series

Compact cylinder double acting/ double rod/anti-spatter adherence

SSD2-DG4 Series

● Bore size: ø25/ø32/ø40/ø50/ø63/ø80/ø100

JIS symbol 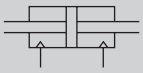

RoHS

Specifications

Item	SSD2-DG1/DG4 SSD2-DG1L/DG4L (with switch)						
Bore size mm	ø25	ø32	ø40	ø50	ø63	ø80	ø100
Actuation	Double acting						
Working fluid	Compressed air						
Max. working pressure MPa	1.0 (≈150 psi, 10 bar)						
Min. working pressure MPa	0.2 (≈29 psi, 2 bar)				0.15 (≈22 psi, 1.5 bar)		
Proof pressure MPa	1.6 (≈230 psi, 16 bar)						
Ambient temperature °C	-10 (14°F) to 60 (140°F) (no freezing)						
Port size	Rc1/8			Rc1/4		Rc3/8	
Stroke tolerance mm	$^{+1.0}_{0}$						
Working piston speed mm/s	50 to 500					50 to 300	
Cushion	None						
Lubrication	Not required (use turbine oil ISO VG32 if necessary for lubrication)						
Allowable absorbed energy J	0.021	0.025	0.092	0.1	0.12	0.27	0.56

Stroke

Bore size (mm)	Standard stroke (mm)	Max. stroke (mm)	Min. stroke (mm)
ø25	5/10/15/20/25/30/35/40/45/50	50	1(10) The value in ( ) is for types with one or two switches.
ø32	5/10/15/20/25/30/35/40/45/50/75/100	100	
ø40			
ø50	10/15/20/25 30/35/40/45/50 75/100		
ø63			
ø80			
ø100			

*1: The custom stroke is available in 1 mm increments.

Custom stroke

● SSD2-DG1, DG4 Series

Item	Standard products Standard stroke body with spacer	
Model No.	Refer to How to order.	
Description	A spacer is added to the standard stroke body to adjust the stroke in 1 mm increments.	
Stroke range	Bore size	Stroke range
	25	1 to 49
	32 to 100	1 to 99
Example of model No.	Model No.: SSD2-DG1-32-38 A +2 mm spacer is added to the SSD2-DG1-32-40 standard cylinder to create 38 mm stroke. B + stroke is 90.5mm.	

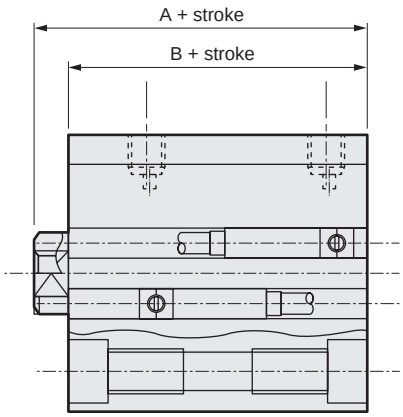

Switch specifications

● Proximity switch for AC magnetic field

Item	2-wire proximity T2YD/T2YDT
Applications	Dedicated for programmable controller
Indicator	Red/green LED (Lit when ON)
Load voltage	24 VDC ±10%
Load current	5 to 20 mA
Internal voltage drop	6 V or less
Leakage current	1.0 mA or less
Output delay time *1 (Delay ON, delay OFF)	60 ms or less
Lead wire length	1m (oil resistant vinyl cabtyre cable ø 6, 0.5 mm^2 x 2-conductor) *2, *3
Insulation resistance	100 MΩ and over at 500 VDC megger
Withstand voltage	No failure after 1 minute of 1,000 VAC application.
Max. shock resistance	980 m/s^2
Ambient temperature	-10 to +60°C
Degree of protection	JIS C0920 (water-tight), IEC standards IP67, oil resistance
Weight g	1 m:61 3 m:166 5 m:272

*1: Indicates the time from magnetic sensor detection of the piston magnet until switch output.
*2: 3 m and 5 m lead wires are available as options.
*3: Flame-resistant lead wires are available as options.
*4: This switch cannot be used in DC environments.

Cylinder weight table

(the weight of the switches is when there are 2 cylinder switches.)

(Unit: g)

Stroke (mm)	5		10		15		20		25		30		35		40		45		50		75		100	
Bore size (mm)	No switch	Switch	No switch	Switch	No switch	Switch	No switch	Switch	No switch	Switch	No switch	Switch	No switch	Switch	No switch	Switch	No switch	Switch	No switch	Switch	No switch	Switch	No switch	Switch
ø25	234	325	249	340	265	356	281	372	297	388	313	403	329	419	344	435	360	461	375	486	-	-	-	-
ø32	308	423	354	468	399	514	446	560	490	605	537	651	584	696	631	741	678	786	725	831	960	1056	1195	1281
ø40	446	589	473	616	499	642	526	669	553	696	579	732	606	754	632	775	659	802	685	828	818	961	950	1093
ø50	-	-	746	940	796	989	846	1041	896	1089	946	1139	996	1189	1046	1239	1098	1291	1149	1343	1407	1603	1664	1863
ø63	-	-	1203	1567	1278	1642	1353	1717	1428	1792	1503	1867	1579	1943	1654	2018	1729	2093	1804	2168	2179	2543	2554	2918
ø80	-	-	2112	2042	2229	2420	2345	2798	2462	2915	2578	3031	2695	3153	2812	3275	2929	3392	3045	3508	3628	4091	4210	4673
ø100	-	-	3153	3775	3322	3924	3490	4072	3659	4256	3828	4440	3997	4604	4165	4767	4334	4931	4503	5095	5348	5915	6193	6735

Theoretical thrust table

(Unit: N)

Bore size (mm)	Operating direction	Working pressure MPa									
		0.15	0.2	0.3	0.4	0.5	0.6	0.7	0.8	0.9	1.0
ø25	Push/Pull	-	75.6	$1.13x10^2$	$1.51x10^2$	$1.89x10^2$	$2.27x10^2$	$2.64x10^2$	$3.02x10^2$	$3.40x10^2$	$3.78x10^2$
ø32	Push/Pull	-	$1.21x10^2$	$1.81x10^2$	$2.41x10^2$	$3.02x10^2$	$3.62x10^2$	$4.22x10^2$	$4.83x10^2$	$5.43x10^2$	$6.03x10^2$
ø40	Push/Pull	-	$2.11x10^2$	$3.17x10^2$	$4.22x10^2$	$5.28x10^2$	$6.33x10^2$	$7.39x10^2$	$8.44x10^2$	$9.50x10^2$	$1.06x10^3$
ø50	Push/Pull	-	$3.30x10^2$	$4.95x10^2$	$6.60x10^2$	$8.25x10^2$	$9.90x10^2$	$1.15x10^3$	$1.32x10^3$	$1.48x10^3$	$1.65x10^3$
ø63	Push/Pull	$4.20x10^2$	$5.61x10^2$	$8.41x10^2$	$1.12x10^3$	$1.40x10^3$	$1.68x10^3$	$1.96x10^3$	$2.24x10^3$	$2.52x10^3$	$2.80x10^3$
ø80	Push/Pull	$6.80x10^2$	$9.07x10^2$	$1.36x10^3$	$1.81x10^3$	$2.27x10^3$	$2.72x10^3$	$3.17x10^3$	$3.63x10^3$	$4.08x10^3$	$4.54x10^3$
ø100	Push/Pull	$1.07x10^3$	$1.43x10^3$	$2.14x10^3$	$2.86x10^3$	$3.57x10^3$	$4.29x10^3$	$5.00x10^3$	$5.72x10^3$	$6.43x10^3$	$7.15x10^3$

SCP*3
CMK2
CMA2
SCM
SCG
SCA2
SCS2
CKV2
CAV2/COVP/N2
SSD2
SSG
SSD
CAT
MDC2
MVC
SMG
MSD/MSDG
FC*
STK
SRL3
SRG3
SRM3
SRT3
MRL2
MRG2
SM-25
ShkAbs
FJ
FK
Spd Contr
Ending

How to order

No switch (without magnet for switch)

SSD2-DG4 - 32 - 10 ———— N - LB - I

With switch (built-in magnet for switch)

SSD2-DG4L - 32 - 10 - T2YD - R - N - LB - I

- Ⓐ Model No.
- Ⓑ Bore size
- Ⓒ Stroke
- Ⓓ Switch model No.
- Ⓔ Switch quantity
- Ⓕ Option
- Ⓖ Mounting bracket *1
- Ⓗ Accessory *2

Code	Description
Ⓐ Model No.	
SSD2-DG1	Double acting/double rod/coil scraper
SSD2-DG1L	Double acting/double rod/coil scraper/with switch
SSD2-DG4	Double acting/double rod/anti-spatter adherence
SSD2-DG4L	Double acting/double rod/anti-spatter adherence/with switch

Ⓑ Bore size (mm)	
25	ø25
32	ø32
40	ø40
50	ø50
63	ø63
80	ø80
100	ø100

Ⓒ Stroke (mm)

Refer to the stroke table on the following page.

Ⓓ Switch model No.

Lead wire Straight	Lead wire L-shaped	Contact	Voltage	Indicator	Lead wire
T2YD*	-	Proximity	DC	2-color LED for AC magnetic field	2-wire
T2YDT*	-				
T2YDU (Made-to-order product)				2-color LED (AC magnetic field) Cable connect SW	

*** Lead wire length**	
Blank	1 m (standard)
3	3 m (option)
5	5 m (option)

Ⓔ Switch quantity	
R	1 on rod side
H	1 on head side
D	2

Ⓕ Option	
Blank	Rod end female thread
N	Rod end male thread

Ⓖ Mounting bracket	
Blank	Without mounting bracket
LB	Axial foot (made-to-order product)
FA	Rod side flange (made-to-order product)

Ⓗ Accessory (available when rod end male thread "N" is selected)	
I	Rod eye
Y	Rod clevis (pin and snap ring included)

How to order switch

SW - T2YD

Switch model No. (Item Ⓓ above)

⚠ Precautions for model No. selection

*1: The mounting bracket is included at shipment.
*2: "I" and "Y" cannot be selected together.

[Example of model No.]

SSD2-DG4L-32-10-T2YD-R-N

Model: Compact cylinder
Double acting, double rod, anti-spatter adherence

Ⓑ Bore size : ø32 mm
Ⓒ Stroke : 10 mm
Ⓓ Switch model No.: Proximity switch for AC magnetic field T2YD, lead wire length 1 m
Ⓔ Switch quantity : 1 on rod side
Ⓕ Option : Rod end male thread

[Stroke table]

Stroke (mm)		Applicable bore size						
		25	32	40	50	63	80	100
Standard stroke	5	●	●	●				
	10	●	●	●	●	●	●	●
	15	●	●	●	●	●	●	●
	20	●	●	●	●	●	●	●
	25	●	●	●	●	●	●	●
	30	●	●	●	●	●	●	●
	35	●	●	●	●	●	●	●
	40	●	●	●	●	●	●	●
	45	●	●	●	●	●	●	●
	50	●	●	●	●	●	●	●
	75		●	●	●	●	●	●
	100		●	●	●	●	●	●
Min. stroke (mm) *1		1						
Max. stroke (mm)		50	100					
Custom stroke *2		In 1 mm increments						

*1: Less than 10 mm stroke is not available.
*2: The total length is the same as that of the next longer standard stroke.

Internal structure and parts list

● SSD2-DG1L/DG4L-25 to 50 (double acting/double rod/anti-spatter adherence/with switch)

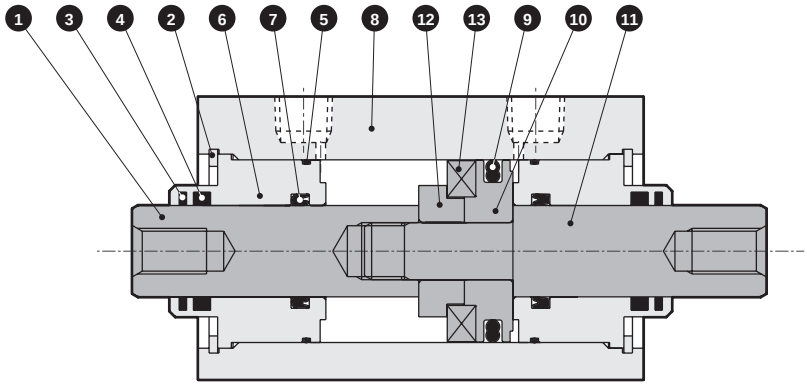

● SSD2-DG1/DG4-25 to 50 (double acting/double rod/anti-spatter adherence)

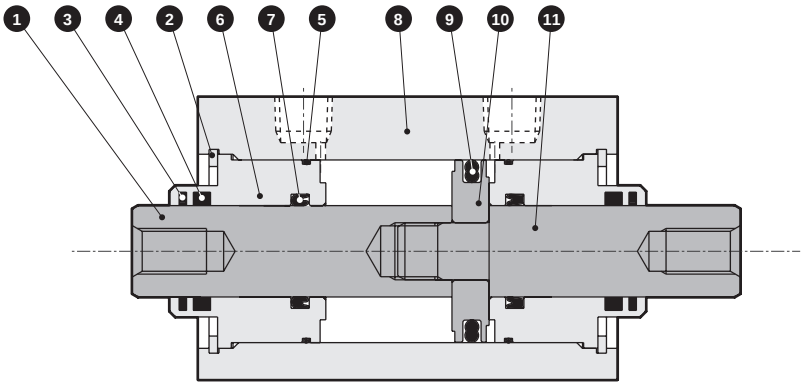

No.	Part name	Material	Remarks
1	Piston rod A	ø25: Stainless steel ø32 to ø50: Steel	Industrial chrome plating
2	C-snap ring for hole	Steel	Zinc phosphate
3	Coil scraper	Phosphor bronze	
4	Lube keeping structure	Special rubber	G4 only
5	Rod metal gasket	Nitrile rubber	
6	Rod metal	Aluminum alloy	Alumite
7	Rod packing	Nitrile rubber	

No.	Part name	Material	Remarks
8	Body	Aluminum alloy	Hard alumite
9	Piston packing	Nitrile rubber	
10	Piston	Aluminum alloy	Chromate
11	Piston rod B	ø25: Stainless steel ø32 to ø50: Steel	Industrial chrome plating
12	Spacer	Aluminum alloy	ø25, ø32: Chromate
13	Magnet	Plastic	

Repair parts list

Part name / Bore size (mm)	Kit No.	Repair parts No.
ø25	SSD2-DG1-25K	3 5 7 9
ø32	SSD2-DG1-32K	
ø40	SSD2-DG1-40K	
ø50	SSD2-DG1-50K	

Internal structure and parts list

● SSD2-DG1L/DG4L-63 to 100 (double acting/double rod/anti-spatter adherence/with switch)

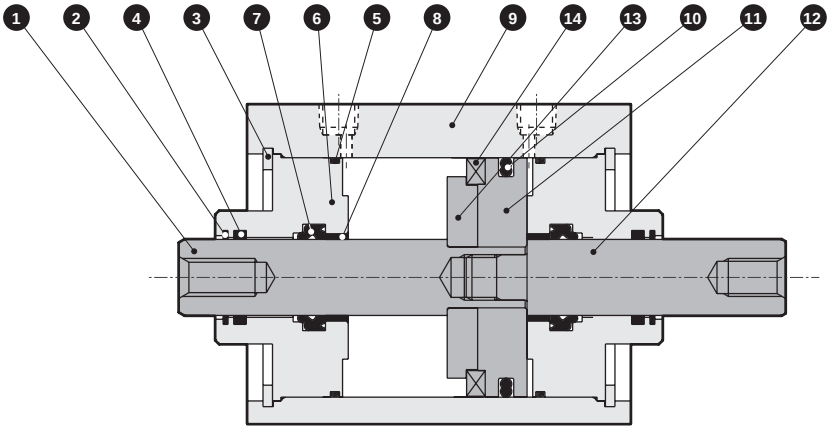

● SSD2-DG1/DG4-63 to 100 (double acting/double rod/anti-spatter adherence)

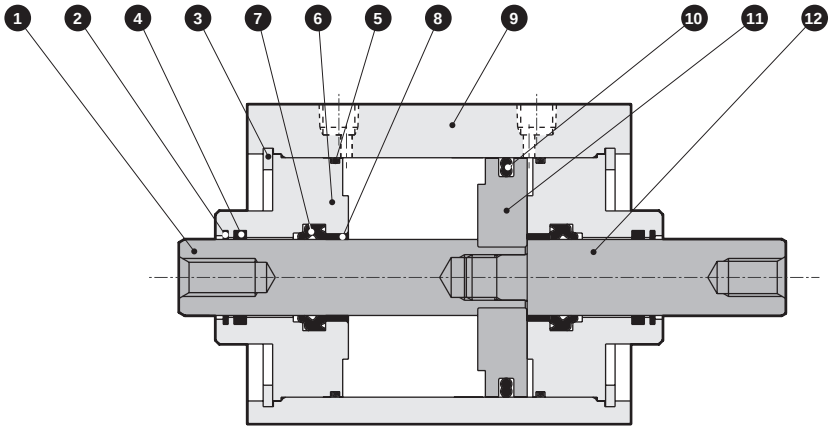

No.	Part name	Material	Remarks	No.	Part name	Material	Remarks
1	Piston rod A	Steel	Industrial chrome plating	8	Bush	Oiles drymet	
2	Coil scraper	Phosphor bronze		9	Body	Aluminum alloy	Hard alumite
3	C-snap ring for hole	Steel	Zinc phosphate	10	Piston packing	Nitrile rubber	Chromate
4	Lube keeping structure	Special rubber	G4 only	11	Piston	Aluminum alloy	Chromate
5	Rod metal gasket	Nitrile rubber		12	Piston rod B	Steel	Industrial chrome plating
6	Rod metal	Aluminum alloy	Chromate	13	Spacer	Aluminum alloy	Chromate
7	Rod packing	Nitrile rubber		14	Magnet	Plastic	

Repair parts list

Part name / Bore size (mm)	Kit No.	Repair parts No.
ø63	SSD2-DG1-63K	2 5 7 10
ø80	SSD2-DG1-80K	
ø100	SSD2-DG1-100K	

Dimensions

● SSD2-DG1L/DG4L-25 (with switch)

● Rod end male thread

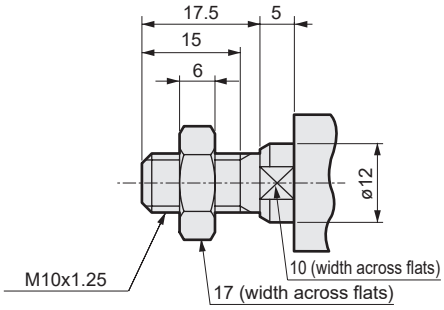

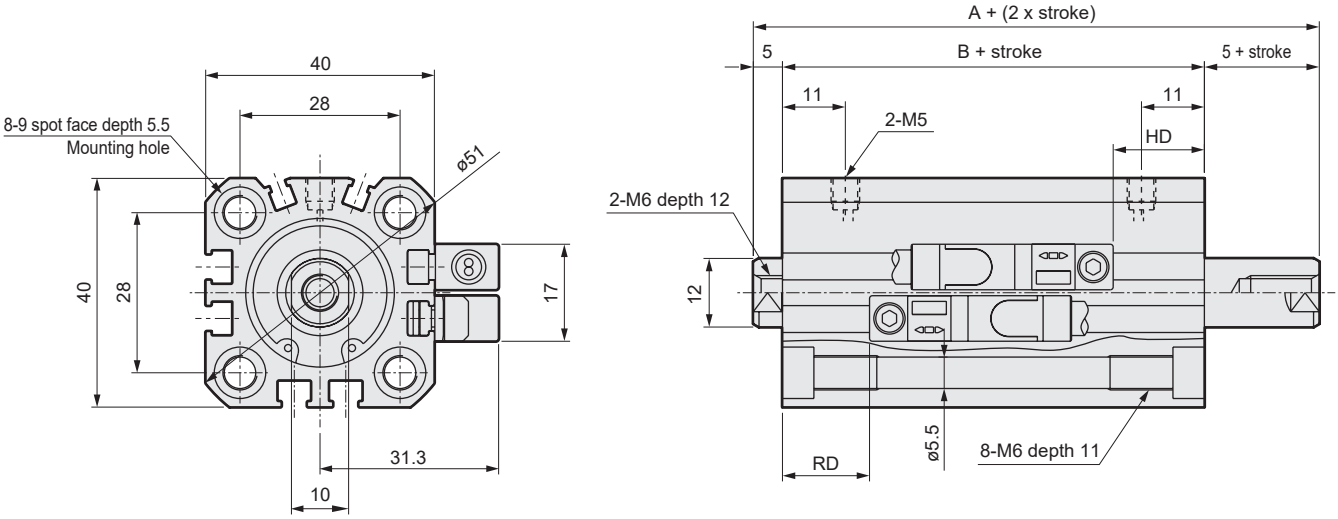

● SSD2-DG1/DG4-25 (without switch)

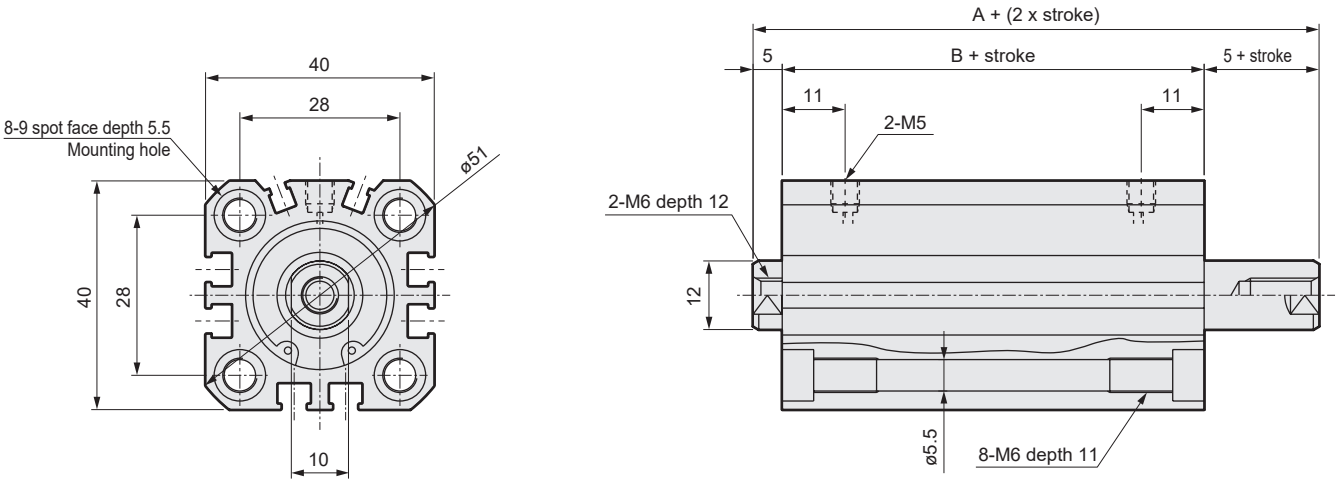

Code	No switch		Dimensions with switch					
Bore size (mm)	A *1	B *1	A *1	B *1	FA	FB	RD *2	HD
ø25	59	49	69	59	31.5	17	20	21.5

*1 : To calculate A+ (2 x stroke), B+ stroke or 5+ stroke when using a custom stroke, apply the next longer standard stroke (instead of the custom stroke) to the stroke value. Left and right projection dimensions of rod differ.
(Example) If the custom stroke is 17 mm, apply the standard stroke 20 mm.
*2 : RD dimensions for custom stroke differ from these dimensions according to the setting.
*3 : For dimensions of individual accessories, refer to pages 1046 to 1049.
*4: The positions for the left and right widths across flats are unspecified.

Dimensions

● SSD2-DG1L/DG4L-32 to 100 (with switch)

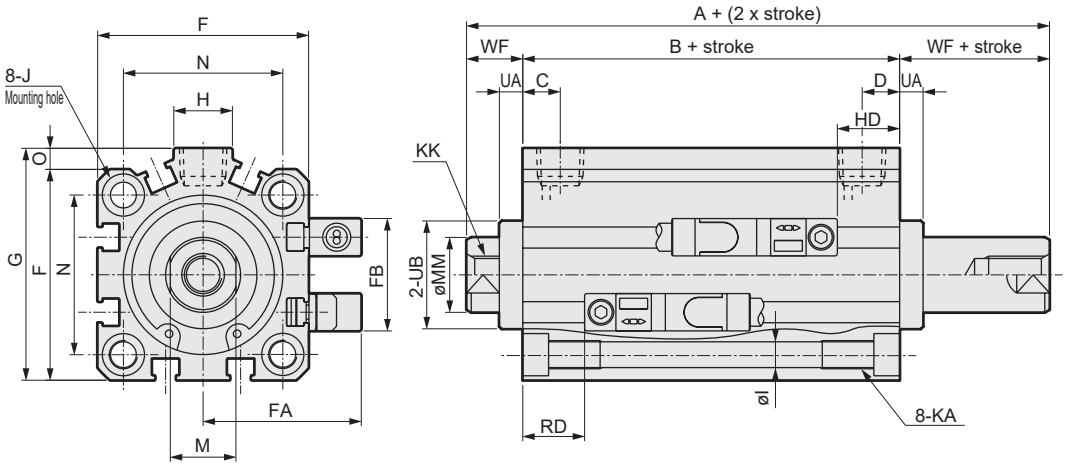

● Rod end male thread

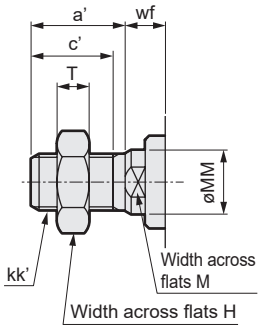

● SSD2-DG1/DG4-32 to 100 (without switch)

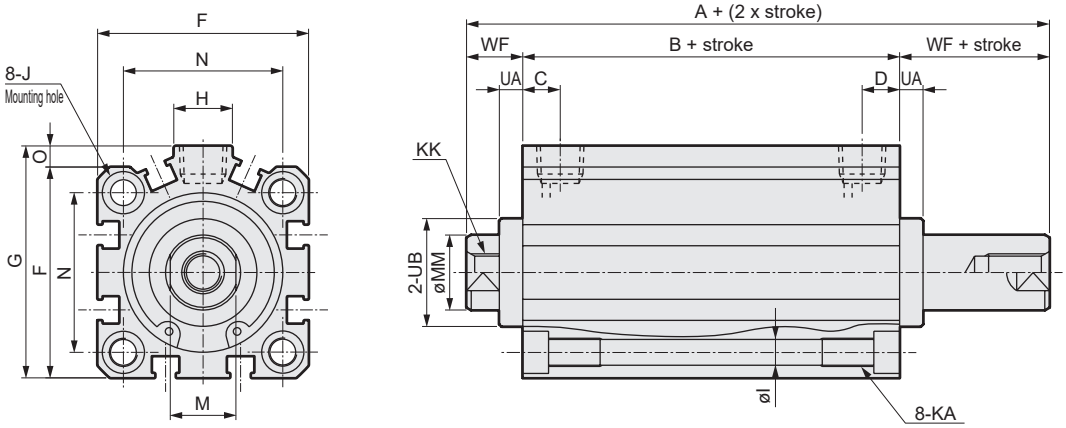

Code / Bore size (mm)	No switch			Common dimensions with switch														
	A *1, *4		B *1, *4	A *1		B *1	C	D	EE	F	FA	FB	G	H	I	J	KA	KK
	G1	G4		G1	G4													
ø32	54.5(64.5)	64.5(74.5)	30.5(40.5)	64.5	74.5	40.5	8	8	Rc1/8	45	33.5	24	49.5	12.5	5.5	9 spot face depth 5.5	M6 depth 11	M8 depth 13
ø40	64(74)	74(84)	40(50)	74	84	50	12	12	Rc1/8	52	37	31	57	15	5.5	9 spot face depth 5.5	M6 depth 11	M8 depth 13
ø50	66.5(76.5)	76.5(86.5)	40.5(50.5)	76.5	86.5	50.5	10.5	10.5	Rc1/4	64	43	32	71	18	6.9	11 spot face depth 6.5	M8 depth 13	M10 depth 15
ø63	68(78)	78(88)	42(52)	78	88	52	13	13	Rc1/4	77	49.5	32	84	23	8.7	14 spot face depth 9	M10 depth 25	M10 depth 15
ø80	81(91)	91(101)	51(61)	91	101	61	16	16	Rc3/8	98	60	32	104	31	10.5	17 spot face depth 11	M12 depth 28	M16 depth 21
ø100	94.5(104.5)	104.5(114.5)	60.5(70.5)	104.5	114.5	70.5	23	23	Rc3/8	117	69.5	32	123.5	38	10.5	17.5 spot face depth 11	M12 depth 28	M20 depth 27

Code / Bore size (mm)	Common dimensions with switch									With T2YD switch	
	M	MM	N	O	UA		UB	WF		RD *2	HD
					G1	G4		G1	G4		
ø32	14	16	34	4.5	5	10	23 h9	12	17	20.5	22
ø40	14	16	40	5	5	10	28 h9	12	17	23.5	27.5
ø50	17	20	50	7	5	10	35 h9	13	18	23.5	27.5
ø63	17	20	60	7	5	10	35 h9	13	18	24	28.5
ø80	22	25	77	6	5	10	43 h9	15	20	26.5	35
ø100	27	30	94	6.5	5	10	59 h9	17	22	30.5	40.5

*1 : To calculate A+ (2 x stroke), B+ stroke or WF+ stroke when using a custom stroke, apply the next longer standard stroke (instead of the custom stroke) to the stroke value. Left and right projection dimensions of rod differ. (Example) If the custom stroke is 17 mm, apply the standard stroke 20 mm.
*2 : RD dimensions for custom stroke differ from these dimensions according to the setting.
*3 : For dimensions of individual accessories, refer to pages 1046 to 1049.
*4 : Dimensions in ( ) of codes A and B are for strokes of more than 50 mm.
*5: The positions for the left and right widths across flats are unspecified.

● Dimensions of rod end male thread part

Code / Bore size (mm)	a'	c'	H	kk'	M	MM	T	wf	
								G1	G4
ø32	23.5	20.5	22	M14x1.5	14	16	8	10	15
ø40	23.5	20.5	22	M14x1.5	14	16	8	10	15
ø50	28.5	26	27	M18x1.5	17	20	11	10	15
ø63	28.5	26	27	M18x1.5	17	20	11	10	15
ø80	35.5	32.5	32	M22x1.5	22	25	13	13	18
ø100	35.5	32.5	41	M26x1.5	27	30	16	13	18

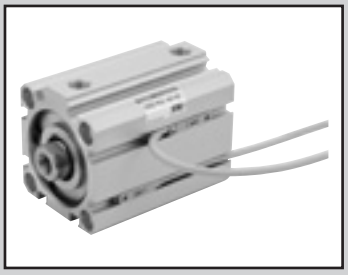

Compact cylinder double acting single rod/environment-resistant scraper

SSD2-G5 Series

● Bore size: ø20/ø25/ø32/ø40/ø50/ø63/ø80/ø100

JIS symbol 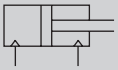

RoHS

Specifications

Item		SSD2-G5 SSD2-G5L (with switch)							
Bore size	mm	ø20	ø25	ø32	ø40	ø50	ø63	ø80	ø100
Actuation		Double acting							
Working fluid		Compressed air							
Max. working pressure	MPa	1.0 (≈150 psi, 10 bar)							
Min. working pressure	MPa	0.2 (≈29 psi, 2 bar)					0.15 (≈22 psi, 1.5 bar)		
Proof pressure	MPa	1.6 (≈230 psi, 16 bar)							
Ambient temperature	°C	-10 (14°F) to 60 (140°F) (no freezing)							
Port size		M5		Rc1/8 (*1)		Rc1/4		Rc3/8	
Stroke tolerance	mm	+1.0 0							
Working piston speed	mm/s	50 to 500					50 to 300		
Cushion		None							
Lubrication		Not required (use turbine oil class 1 ISO VG32 if necessary for lubrication)							
Allowable absorbed energy J		0.016	0.021	0.025	0.092	0.1	0.12	0.27	0.56

*1: The ø32 bore size with a 5 mm stroke and without a switch has a port size of M5.

Stroke

Bore size (mm)	Standard stroke (mm)	Max. stroke (mm)	Min. stroke (mm)
ø20	5/10/15/20/25/30/35/40/45/50	50	1
ø25			
ø32	5/10/15/20/25/30/35/40/45/50/75/100	100	
ø40			
ø50	10/15/20/25/30/35/40/45/50/75/100		
ø63			
ø80			
ø100			

*1 : For the type with switch, refer to the table of switch mounting quantity and minimum stroke.
*2 : The custom stroke is available in 1 mm increments. The total length when using a custom stroke is the same as that when using the next longer standard stroke.

Min. stroke with switch (2 switches)

Bore size (mm)	T0H/V / T5H/V	T2H/V / T3H/V
ø20	5	5
ø25		
ø32		
ø40		
ø50		
ø63		
ø80		
ø100		

1 : Less than 10 mm with the 2-color LED, off-delay, AC magnetic field proof, T1 or T8* switch is not available.
*2 : Values in ( ) are for the type with 1 on rod side.

Custom stroke

● SSD2-G5 Series

Item	Standard products Standard stroke body with spacer	
Model No.	Refer to How to order.	
Description	A spacer is added to the standard stroke body to adjust the stroke in 1 mm increments.	
Stroke range	Bore size	Stroke range
	20 to 25	1 to 49
	32 to 100	1 to 99
Example of model No.	Model No.: SSD2-G5-32-38 A +2 mm spacer is added to the SSD2-G5-32-40 standard cylinder to create 38 mm stroke. B + stroke is 73mm.	

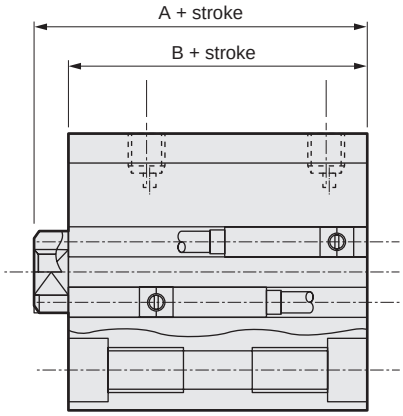

Switch specifications (F-switch)

● 1-color/2-color LED

Item	2-wire proximity	3-wire proximity	2-wire proximity		3-wire proximity		
	F2S	F3S	F2H/F2V	F2YH/F2YV	F3H/F3V	F3PH/F3PV (made to order)	F3YH/F3YV
Applications	Dedicated for programmable controller	For programmable controller, relay	Dedicated for programmable controller		For programmable controller, relay		
Output method	-	NPN output	-		NPN output	PNP output	NPN output
Power supply voltage	-	10 to 28 VDC	-		10 to 28 VDC	4.5 to 28 VDC	10 to 28 VDC
Load voltage	10 to 30 VDC	30 VDC or less	10 to 30 VDC	24 VDC ±10%	30 VDC or less		
Load current	5 to 20 mA	50 mA or less	5 to 20 mA		50 mA or less		
Indicator	LED (Lit when ON)		Yellow LED (Lit when ON)	Red/green LED (Lit when ON)	Yellow LED (Lit when ON)		Red/green LED (Lit when ON)
Leakage current	1 mA or less	10 μA or less	1 mA or less		10 μA or less		
Weight g	1 m:10 3 m:29						

Switch specifications (T-switch)

● 1-color/2-color LED/for AC magnetic field proof

Item	2-wire proximity	2-wire proximity			3-wire proximity				2-wire reed							2-wire proximity
	T1H/T1V	T2H/T2V/ T2JH/T2JV	T2YH/ T2YV	T2WH/ T2WV	T3H/ T3V	T3PH/ T3PV	T3YH/ T3YV	T3WH/ T3WV	T0H/T0V		T5H/T5V		T8H/T8V			T2YD(*4) T2YDT
Applications	For programmable controller, relay, compact solenoid valve	Dedicated for programmable controller			For programmable controller, relay				For programmable controller, relay		For programmable controller, relay, IC circuit (no indicator lamp), serial connection		For programmable controller, relay			Dedicated for programmable controller
Output method	-				NPN output	PNP output	NPN output	NPN output	-							
Pwr. supp. V.	-				10 to 28 VDC				-							
Load voltage	85 to 265 VAC	10 to 30 VDC		24 VDC ±10%	30 VDC or less				12/24 VDC	100/110 VAC	5/12/24 VDC	100/110 VAC	12/24 VDC	110 VAC	220 VAC	24 VDC ±10%
Load current	5 to 100 mA	5 to 20 mA (*3)			100 mA or less		50 mA or less		5 to 50 mA	7 to 20 mA	50 mA or less	20 mA or less	5 to 50 mA	7 to 20 mA	7 to 10 mA	5 to 20 mA
Indicator	LED (Lit when ON)	LED (Lit when ON)	Red/green LED (Lit when ON)	Red/green LED (Lit when ON)	LED (Lit when ON)	Yellow LED (Lit when ON)	Red/green LED (Lit when ON)	Red/green LED (Lit when ON)	LED (Lit when ON)		No indicator lamp		LED (Lit when ON)			Red/green LED (Lit when ON)
Leakage current	≤ 1 mA at 100 VAC, ≤ 2 mA at 200 VAC	1 mA or less			10 μA or less				0 mA							1 mA or less
Weight g	1 m:33 3 m:87 5 m:142	1 m:18 3 m:49 5 m:80	1 m:33 3 m:87 5 m:142	1 m:18 3 m:49 5 m:80	1 m:18 3 m:49 5 m:80		1 m:33 3 m:87 5 m:142	1 m:18 3 m:49 5 m:80	1 m:18 3 m:49 5 m:80				1 m:33 3 m:87 5 m:142			1 m:61 3 m:166 5 m:272

*1 : Refer to Ending Page 1 for detailed switch specifications and dimensions.
*2 : Switches other than the above models, such as switches with connectors, are also available. Refer to Ending Page 1.
*3 : The max. load current is 20 mA at 25°C. The current is lower than 20 mA if the operating ambient temperature around the switch is higher than 25˚C. (5 to 10 mA at 60°C)
*4 : Switch for AC magnetic field (T2YD/T2YDT) cannot be used in DC magnetic field.
*5 : The F-switch uses a bend-resistant lead wire.

Cylinder weight table (the weight of the switches is when there are 2 cylinder switches.)

(Unit: g)

Stroke (mm)	5		10		15		20		25		30		35		40		45		50		75		100	
Bore size (mm)	No switch	Switch	No switch	Switch	No switch	Switch	No switch	Switch	No switch	Switch	No switch	Switch	No switch	Switch	No switch	Switch	No switch	Switch	No switch	Switch	No switch	Switch	No switch	Switch
ø20	95	150	107	182	120	195	133	208	145	220	158	233	171	246	184	259	197	272	210	285	-	-	-	-
ø25	131	222	146	237	162	253	178	269	194	285	209	300	225	316	241	332	257	348	272	363	-	-	-	-
ø32	185	299	207	321	229	343	251	365	272	386	294	408	316	430	338	452	360	474	381	495	552	600	662	710
ø40	269	412	296	439	322	465	349	492	376	519	402	545	429	572	455	598	482	625	508	651	726	784	858	916
ø50	-	-	476	670	518	712	560	754	602	796	645	839	687	881	729	923	771	965	813	1007	1160	1217	1370	1427
ø63	-	-	703	982	758	1037	813	1092	868	1147	923	1202	999	1258	1074	1313	1150	1369	1144	1423	1332	1696	1709	1973
ø80	-	-	1240	1653	1327	1740	1413	1826	1500	1908	1586	1990	1673	2082	1760	2173	1847	2265	1933	2346	2701	2754	3136	3211
ø100	-	-	1879	2446	1993	2560	2106	2673	2220	2787	2334	2901	2448	3015	2561	3128	2675	3242	2789	3356	3857	3929	4424	4496

Theoretical thrust table

(Unit: N)

Bore size (mm)	Operating direction	Working pressure MPa									
		0.15	0.2	0.3	0.4	0.5	0.6	0.7	0.8	0.9	1.0
ø20	Push	-	62.8	94.2	$1.26x10^2$	$1.57x10^2$	$1.88x10^2$	$2.20x10^2$	$2.51x10^2$	$2.83x10^2$	$3.14x10^2$
	Pull	-	47.1	70.7	94.2	$1.18x10^2$	$1.41x10^2$	$1.65x10^2$	$1.88x10^2$	$2.12x10^2$	$2.36x10^2$
ø25	Push	-	98.2	$1.47x10^2$	$1.96x10^2$	$2.45x10^2$	$2.95x10^2$	$3.44x10^2$	$3.93x10^2$	$4.42x10^2$	$4.91x10^2$
	Pull	-	75.6	$1.13x10^2$	$1.51x10^2$	$1.89x10^2$	$2.27x10^2$	$2.64x10^2$	$3.02x10^2$	$3.40x10^2$	$3.78x10^2$
ø32	Push	-	$1.61x10^2$	$2.41x10^2$	$3.22x10^2$	$4.02x10^2$	$4.83x10^2$	$5.63x10^2$	$6.43x10^2$	$7.24x10^2$	$8.04x10^2$
	Pull	-	$1.21x10^2$	$1.81x10^2$	$2.41x10^2$	$3.02x10^2$	$3.62x10^2$	$4.22x10^2$	$4.83x10^2$	$5.43x10^2$	$6.03x10^2$
ø40	Push	-	$2.51x10^2$	$3.77x10^2$	$5.03x10^2$	$6.28x10^2$	$7.54x10^2$	$8.80x10^2$	$1.01x10^3$	$1.13x10^3$	$1.26x10^3$
	Pull	-	$2.11x10^2$	$3.17x10^2$	$4.22x10^2$	$5.28x10^2$	$6.33x10^2$	$7.39x10^2$	$8.44x10^2$	$9.50x10^2$	$1.06x10^3$
ø50	Push	-	$3.93x10^2$	$5.89x10^2$	$7.85x10^2$	$9.82x10^2$	$1.18x10^3$	$1.37x10^3$	$1.57x10^3$	$1.77x10^3$	$1.96x10^3$
	Pull	-	$3.30x10^2$	$4.95x10^2$	$6.60x10^2$	$8.25x10^2$	$9.90x10^2$	$1.15x10^3$	$1.32x10^3$	$1.48x10^3$	$1.65x10^3$
ø63	Push	$4.68x10^2$	$6.23x10^2$	$9.35x10^2$	$1.25x10^3$	$1.56x10^3$	$1.87x10^3$	$2.18x10^3$	$2.49x10^3$	$2.81x10^3$	$3.12x10^3$
	Pull	$4.20x10^2$	$5.61x10^2$	$8.41x10^2$	$1.12x10^3$	$1.40x10^3$	$1.68x10^3$	$1.96x10^3$	$2.24x10^3$	$2.52x10^3$	$2.80x10^3$
ø80	Push	$7.54x10^2$	$1.01x10^3$	$1.51x10^3$	$2.01x10^3$	$2.51x10^3$	$3.02x10^3$	$3.52x10^3$	$4.02x10^3$	$4.52x10^3$	$5.03x10^3$
	Pull	$6.80x10^2$	$9.07x10^2$	$1.36x10^3$	$1.81x10^3$	$2.27x10^3$	$2.72x10^3$	$3.17x10^3$	$3.63x10^3$	$4.08x10^3$	$4.54x10^3$
ø100	Push	$1.18x10^3$	$1.57x10^3$	$2.36x10^3$	$3.14x10^3$	$3.93x10^3$	$4.71x10^3$	$5.50x10^3$	$6.28x10^3$	$7.07x10^3$	$7.85x10^3$
	Pull	$1.07x10^3$	$1.43x10^3$	$2.14x10^3$	$2.86x10^3$	$3.57x10^3$	$4.29x10^3$	$5.00x10^3$	$5.72x10^3$	$6.43x10^3$	$7.15x10^3$

SCP*3
CMK2
CMA2
SCM
SCG
SCA2
SCS2
CKV2
CAV2/COVP/N2
SSD2
SSG
SSD
CAT
MDC2
MVC
SMG
MSD/MSDG
FC*
STK
SRL3
SRG3
SRM3
SRT3
MRL2
MRG2
SM-25
ShkAbs
FJ
FK
Spd Contr
Ending

How to order

No switch (without magnet for switch)

SSD2-G5 - 20 ( ) - 5 ——— N - LB - I

With switch (built-in magnet for switch)

SSD2-G5L - 20 ( ) - 5 - T0H - R - N - LB - I

Ⓐ Model No.
Ⓑ Bore size
Ⓒ Port thread
Ⓓ Stroke
Ⓔ Switch model No. *1 *4
Ⓕ Switch quantity
Ⓖ Option
Ⓗ Mounting bracket *2
Ⓘ Accessory *3

Precautions for model No. selection

1 : The T8 switch cannot be mounted on the ø20 to ø32 bore sizes.
*2 : The mounting bracket is included at shipment. The WF/wf dimension of the cylinder for "LB" and "FA" is set 10 mm longer than that of standard products. The number of the specified protruding dimension will be added at the end of the model No. printed on the metal plate on the body.
*3 : "I" and "Y" cannot be selected together.
*4 : Switches are shipped with the product. Contact CKD if assembling before shipment is necessary.
*5 : F-switch cannot be selected.

[Example of model No.]

SSD2-G5L-32-5-T0H-R-N-LB-I

Model: Compact cylinder
Double acting/single rod/environment-resistant scraper

Ⓑ Bore size : ø32 mm
Ⓒ Port thread : Type of Rc thread
Ⓓ Stroke : 5 mm
Ⓔ Switch model No. : Reed switch T0H, Lead wire length 1 m
Ⓕ Switch quantity : 1 on rod side
Ⓖ Option : Rod end male thread
Ⓗ Mounting bracket : Axial foot
Ⓘ Accessory : Rod eye

Code	Description
Ⓐ Model No.	
SSD2-G5	Double acting/single rod/environment-resistant scraper (made-to-order product)
SSD2-G5L	Double acting/single rod/environment-resistant scraper/switch (MTO)
Ⓑ Bore size (mm)	
20	ø20
25	ø25
32	ø32
40	ø40
50	ø50
63	ø63
80	ø80
100	ø100
Ⓒ Port thread	
Blank	Rc thread/M5 thread
NN	NPT thread (ø32 and over) (made-to-order product)
GN	G thread (ø32 and over) (made-to-order product)
Ⓓ Stroke (mm)	
Refer to the stroke table on the following page.	

Ⓔ Switch model No.

Lead wire Straight	Lead wire L-shaped	Contact	Voltage AC	Voltage DC	Indicator	Lead Line	Bore size 20	25	32	40	50	63	80	100
-	F2S*	Proximity		●	1-color LED	2-wire	●	●						
-	F3S*	Proximity		●	1-color LED	3-wire	●	●						
F2H*	F2V*	Proximity		●	1-color LED	2-wire	●	●						
F3H*	F3V*	Proximity		●	1-color LED	3-wire	●	●						
F3PH*	F3PV*	Proximity		●	1-color LED (PNP output) (custom)	3-wire	●	●						
F2YH*	F2YV*	Proximity		●	2-color LED	2-wire	●	●						
F3YH*	F3YV*	Proximity		●	2-color LED	3-wire	●	●						
T0H*	T0V*	Reed	●	●	1-color LED	2-wire	●	●	●	●	●	●	●	●
T5H*	T5V*	Reed	●	●	No indicator lamp	2-wire	●	●	●	●	●	●	●	●
T8H*	T8V*	Reed	●	●	1-color LED	2-wire				●	●	●	●	●
T1H*	T1V*	Proximity	●		1-color LED	2-wire	●	●	●	●	●	●	●	●
T2H*	T2V*	Proximity		●	1-color LED	2-wire	●	●	●	●	●	●	●	●
T3H*	T3V*	Proximity		●	1-color LED	3-wire	●	●	●	●	●	●	●	●
T3PH*	T3PV*	Proximity		●	1-color LED (PNP output)	3-wire	●	●	●	●	●	●	●	●
T2WH*	T2WV*	Proximity		●	2-color LED	2-wire	●	●	●	●	●	●	●	●
T2YH*	T2YV*	Proximity		●	2-color LED	2-wire	●	●	●	●	●	●	●	●
T3WH*	T3WV*	Proximity		●	2-color LED	3-wire	●	●	●	●	●	●	●	●
T3YH*	T3YV*	Proximity		●	2-color LED	3-wire	●	●	●	●	●	●	●	●
T2YD*	-	Proximity		●	2-color LED for AC magnetic field	2-wire	●	●	●	●	●	●	●	●
T2YDT*	-	Proximity		●	2-color LED for AC magnetic field	2-wire	●	●	●	●	●	●	●	●
T2JH*	T2JV*	Proximity		●	1-color LED off-delay	2-wire	●	●	●	●	●	●	●	●

* Lead wire length	
Blank	1 m (standard)
3	3 m (option)
5	5 m (option) *5

Ⓕ Switch quantity	
R	1 on rod side
H	1 on head side
D	2

Ⓖ Option	
Blank	Rod end female thread
N	Rod end male thread

Ⓗ Mounting bracket	
Blank	Without mounting bracket
LB	Axial foot
CB	Clevis bracket (pin and snap ring included)
FA	Rod side flange
FB	Head side flange

Ⓘ Accessory (available when rod end male thread "N" is selected)	
I	Rod eye
Y	Rod clevis (pin and snap ring included)

[Stroke table]

Stroke (mm)		Applicable bore size							
		20	25	32	40	50	63	80	100
Standard stroke	5	●	●	●	●				
	10	●	●	●	●	●	●	●	●
	15	●	●	●	●	●	●	●	●
	20	●	●	●	●	●	●	●	●
	25	●	●	●	●	●	●	●	●
	30	●	●	●	●	●	●	●	●
	35	●	●	●	●	●	●	●	●
	40	●	●	●	●	●	●	●	●
	45	●	●	●	●	●	●	●	●
	50	●	●	●	●	●	●	●	●
	75			●	●	●	●	●	●
	100			●	●	●	●	●	●
Min. stroke (mm) *1		1							
Max. stroke (mm)		50		100					
Custom stroke *2		In 1 mm increments							

1 : Less than 5 mm for 1-color LED switch and less than 10 mm for the 2-color LED, off-delay, AC magnetic field proof, T1 or T8* switch are not available.
Refer to page 992 for the min. stroke with switch.
*2 : The total length when using a custom stroke is the same as that when using the next longer standard stroke.

How to order switch

SW - T0H

Switch model No.
(Item Ⓔ on page 994)

How to order mounting bracket

Bore size (mm) / Mounting bracket	ø20	ø25	ø32	ø40	ø50	ø63	ø80
Foot (LB)	SSD2-LB-20	SSD2-LB-25	SSD2-LB-32	SSD2-LB-40	SSD2-LB-50	SSD2-LB-63	SSD2-LB-80
Flange (FA/FB)	SSD2-FA-20	SSD2-FA-25	SSD2-FA-32	SSD2-FA-40	SSD2-FA-50	SSD2-FA-63	SSD2-FA-80
Clevis bracket (CB)	SSD2-CB-20	SSD2-CB-25	SSD2-CB-32	SSD2-CB-40	SSD2-CB-50	SSD2-CB-63	SSD2-CB-80

Bore size (mm) / Mounting bracket	ø100
Foot (LB)	SSD2-LB-100
Flange (FA/FB)	SSD2-FA-100
Clevis bracket (CB)	SSD2-CB-100

*1: The foot mounting bracket is provided as 2 pcs./set.

Internal structure and parts list

● SSD2-G5L-20, 25
(double acting/environmentally-resistant scraper/with switch)

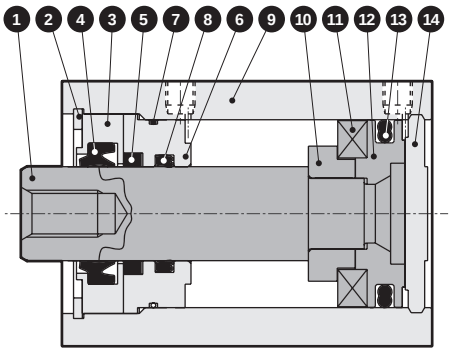

● SSD2-G5-20, 25
(double acting/environmentally-resistant scraper)

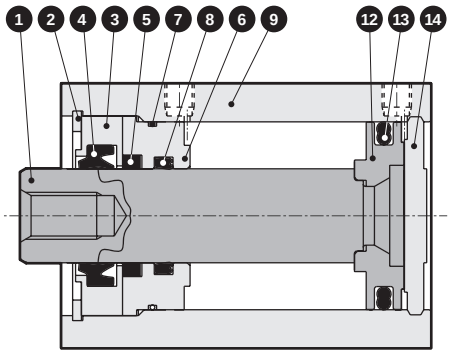

Main parts list

Part No.	Part name	Material	Remarks	Part No.	Part name	Material	Remarks
1	Piston rod	Stainless steel	Industrial chrome plating	9	Body	Aluminum alloy	Hard alumite
2	C-snap ring	Steel	Zinc phosphate	10	Spacer	Aluminum alloy	Chromate
3	Rod metal 1	Special aluminum	Alumite	11	Magnet	Plastic	
4	Scraper	Nitrile rubber		12	Piston	Aluminum alloy	Chromate
5	Lube keeping structure	Special rubber		13	Piston packing	Nitrile rubber	
6	Rod metal	Special aluminum	Alumite	14	Cover	Stainless steel	
7	Rod metal gasket	Nitrile rubber					
8	Rod packing	Nitrile rubber					

Consumable parts list

Part name / Bore size (mm)	Kit No.	Consumable parts No.
ø20	SSD2-G5-20K	4 5 7 8 13
ø25	SSD2-G5-25K	

Internal structure and parts list

● SSD2-G5L-32 to 50
(double acting/environmentally-resistant scraper/with switch)

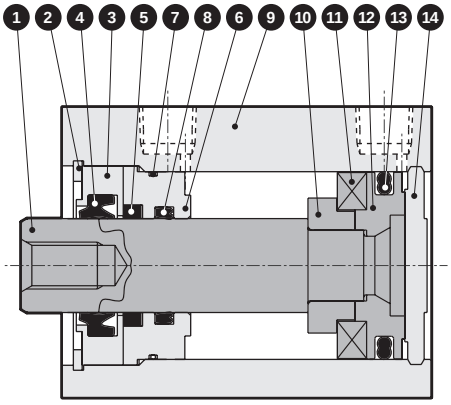

● SSD2-G5L-63 to 100
(double acting/environmentally-resistant scraper/with switch)

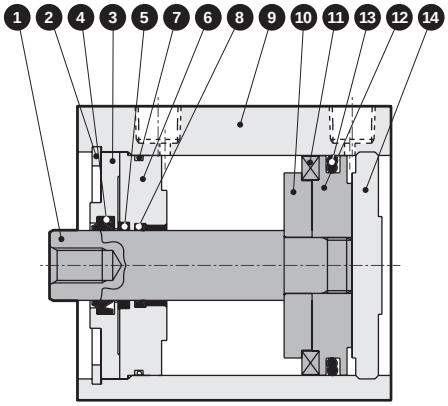

● SSD2-G5-32 to 50
(double acting/environmentally-resistant scraper)

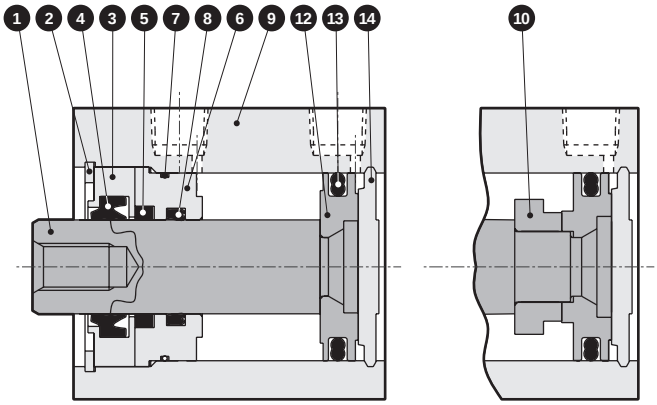

50 st or less　　Over 50 st

● SSD2-G5-63 to 100
(double acting/environmentally-resistant scraper)

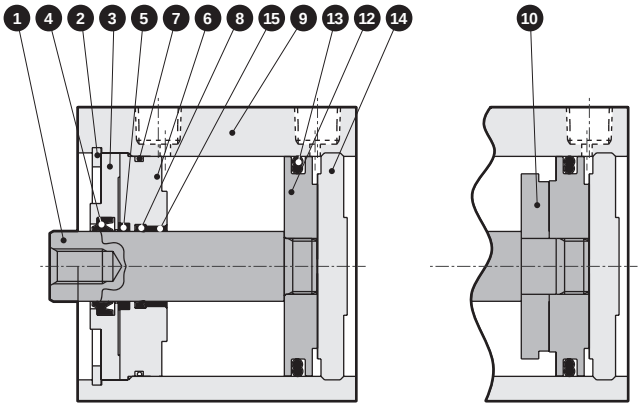

50 st or less　　Over 50 st

Main parts list

Part No.	Part name	Material	Remarks
1	Piston rod	Steel	Industrial chrome plating
2	C-snap ring	Steel	Zinc phosphate
3	Rod metal 1	ø32 to ø50: Special aluminum ø63 to ø100: Aluminum alloy	ø32 to ø50: Alumite ø63 to ø100: Chromate
4	Scraper	Nitrile rubber	
5	Lube keeping structure	Special rubber	
6	Rod metal	ø32 to ø50: Special aluminum ø63 to ø100: Aluminum alloy	ø32 to ø50: Alumite ø63 to ø100: Chromate
7	Rod metal gasket	Nitrile rubber	
8	Rod packing	Nitrile rubber	
9	Body	Aluminum alloy	Hard alumite
10	Spacer	Aluminum alloy	Chromate
11	Magnet	Plastic	
12	Piston	Aluminum alloy	Chromate
13	Piston packing	Nitrile rubber	
14	Cover	Aluminum alloy	Alumite
15	Bush	Oiles drymet	

Consumable parts list

Part name / Bore size (mm)	Kit No.	Consumable parts No.
ø32	**SSD2-G5-32K**	4 5 7 8 13
ø40	**SSD2-G5-40K**	
ø50	**SSD2-G5-50K**	
ø63	**SSD2-G5-63K**	
ø80	**SSD2-G5-80K**	
ø100	**SSD2-G5-100K**	

SCP*3
CMK2
CMA2
SCM
SCG
SCA2
SCS2
CKV2
CAV2/ COVP/N2
SSD2
SSG
SSD
CAT
MDC2
MVC
SMG
MSD/ MSDG
FC*
STK
SRL3
SRG3
SRM3
SRT3
MRL2
MRG2
SM-25
ShkAbs
FJ
FK
Spd Contr
Ending

dimensions

● SSD2-G5L-20, 25 (with switch, TOH/V, T5H/V, T2H/V, T3H/V)

ø20/ø25

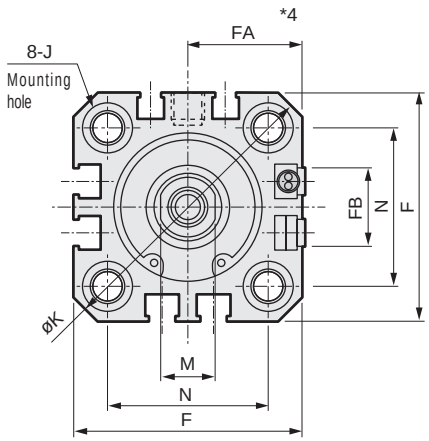

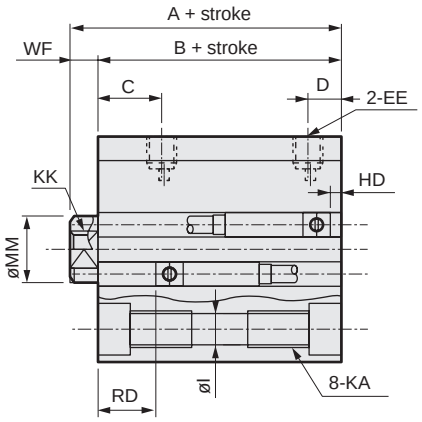

● Rod end male thread

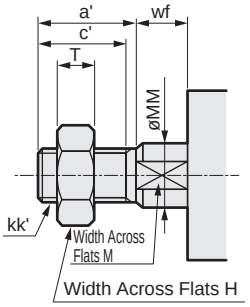

● SSD2-G5-20, 25 (without switch)

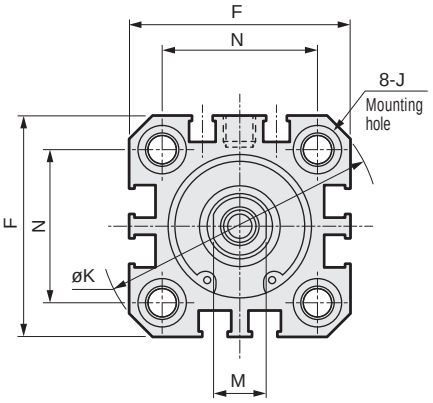

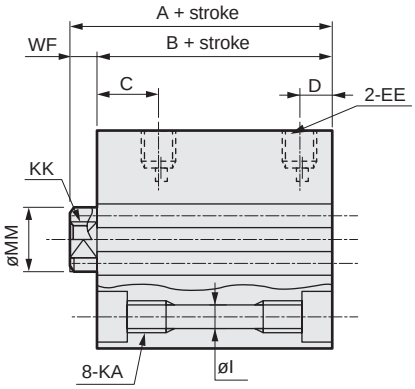

Code	No switch		Common dimensions with switch							
Bore size	A*1	B*1	A*1	B*1	C	D	EE	F	FA*4	FB
ø20	34	29.5	44	39.5	18	5.5	M5	36	18.5(22)	12.5
ø25	37.5	32.5	47.5	42.5	21	6	M5	40	20.5(24)	13.5

Code	Common dimensions with switch								
Bore size	I	J	K	KA	KK	M	MM	N	WF
ø20	5.5	9 spot face depth 5.5	47	M6 depth 11	M5 depth 7	8	10	25.5	4.5
ø25	5.5	9 spot face depth 5.5	51	M6 depth 11	M6 depth 12	10	12	28	5

Switch dimensions	Reed T0H/T0V, T5H/T5V		Proximity T2H/T2V, T3H/T3V		Proximity T2WH, T2WV, T3WH/T3WV		Proximity F2H/F2V, F3H/F3V, F2YH/F2YV, F3YH/F3YV		Proximity F2S/F3S	
Bore size	HD	RD	HD	RD	HD	RD	HD	RD	HD	RD
ø20	3	17.5	3	17.5	5	19.5	7.5	22	6.5	21
ø25	4	19.5	4	19.5	6	21.5	8.5	24	7.5	23

*1: To calculate A + stroke or B + stroke when using custom stroke, apply the next longer standard stroke (instead of the custom stroke) to the stroke value. (Example) If the custom stroke is 7 mm, apply the standard stroke of 10 mm.
*2: HD and RD dimensions for 5 mm stroke differ from these dimensions according to the setting.
***3: Refer to page 1044 for HD, RD and protruding dimensions of the 2-color LED, off-delay, AC magnetic field proof, T1* and T8* switches.**
*4 : Dimensions in ( ) of FA are for the L-shaped lead wire.
***5: For dimensions with individual accessories, refer to pages 1046 to 1049.**

Rod end male thread

Code	a'	c'	H	kk'	M	MM	T	wf
Bore size								
ø20	14	12	13	M8	8	10	5	4.5
ø25	17.5	15	17	M 10 x 1.25	10	12	6	5

Dimensions

● SSD2-G5L-32 to 100 (with switch, TOH/V, T5H/V, T2H/V, T3H/V)

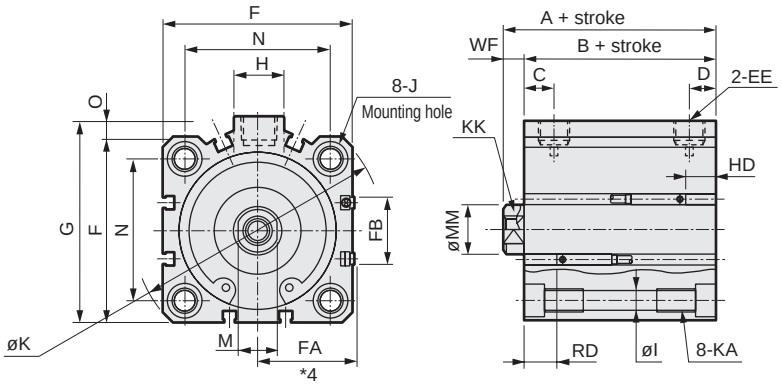

● Rod end male thread

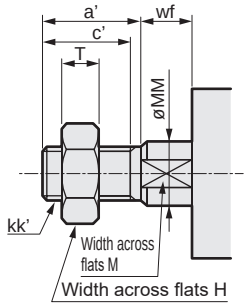

● SSD2-G5-32 to 100 (without switch)

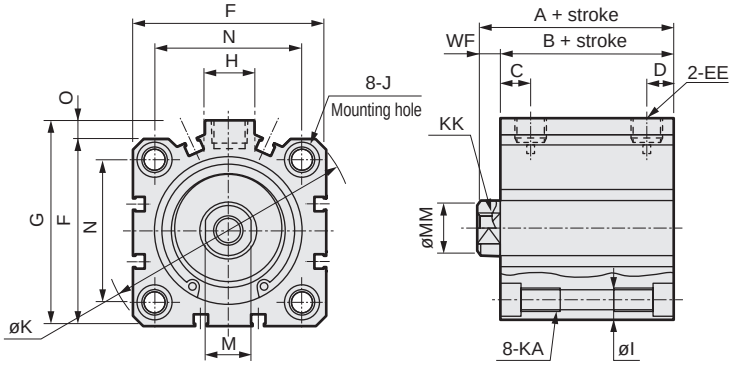

Code / Bore size	No switch		Common dimensions with switch									
	A *1	B *1	A *1	B *1	C *7	D *7	EE *8	F	FA *4	FB	G	H
ø32	40(50)	33(43)	50	43	18(20)	8(5.5)	Rc1/8	45	23(26.5)	20.5	49.5	12.5
ø40	46.5(56.5)	39.5(49.5)	56.5	49.5	22(21.5)	8.5(8)	Rc1/8	52	26.5(30)	27.5	57	15
ø50	48.5(58.5)	40.5(50.5)	58.5	50.5	20.5	10.5	Rc1/4	64	32.5(36)	28.5	71	18
ø63	54(64)	46(56)	64	56	23	11	Rc1/4	77	39(42.5)	28.5	84	23
ø80	63.5(73.5)	53.5(63.5)	73.5	63.5	26	13	Rc3/8	98	49.5(53)	28.5	104	31
ø100	75(85)	63(73)	85	73	33	15	Rc3/8	117	59(62.5)	28.5	123.5	38

Code / Bore size	Common dimensions with switch									
	I	J	K	KA	KK	M	MM	N	O	WF
ø32	5.5	9 spot face depth 5.5	60	M6 depth 11	M8 depth 13	14	16	34	4.5	7
ø40	5.5	9 spot face depth 5.5	69	M6 depth 11	M8 depth 13	14	16	40	5	7
ø50	6.9	11 spot face depth 6.5	86	M8 depth 13	M10 depth 15	17	20	50	7	8
ø63	8.7	14 spot face depth 9	103	M10 depth 25	M10 depth 15	17	20	60	7	8
ø80	10.5	17.5 spot face depth 11	132	M12 depth 28	M16 depth 21	22	25	77	6	10
ø100	10.5	17.5 spot face depth 11	156	M12 depth 28	M20 depth 27	27	30	94	6.5	12

Switch dimensions / Bore size	Reed T0H/T0V, T5H/T5V		Proximity T2H/T2V, T3H/T3V		Proximity T2WH/T2WV, T3WH/T3WV	
	HD	RD	HD	RD	HD	RD
ø32	4	19.5	4	19.5	6	21.5
ø40	7	22	7	22	8.5	23.5
ø50	7.5	22.5	7.5	22.5	9	24
ø63	12.5	23	12.5	23	14	24.5
ø80	17.5	25.5	17.5	25.5	19	27
ø100	23	29.5	23	29.5	24.5	31

*1 : To calculate A+ stroke or B+ stroke when using custom stroke, apply the next longer standard stroke (instead of the custom stroke) to the stroke value. (Example) If the custom stroke is 7 mm, apply the standard stroke of 10 mm.
*2 : HD and RD dimensions for 5 mm stroke differ from these dimensions according to the setting.
3 : Refer to page 1044 for HD, RD and protruding dimensions of the 2-color LED, off-delay, AC magnetic field proof, T1 and T8* switches.
*4: Dimensions in ( ) of FA are for the L-shaped lead wire.
*5 : For dimensions of individual accessories, refer to pages 1046 to 1049.
*6 : Dimensions in ( ) of codes A and B are for strokes of more than 50 mm.
*7 : Dimensions in ( ) of codes C and D are when the value is for a 5 mm stroke without switch.
*8: The ø32 bore size with a 5 mm stroke and without a switch has a port size of M5.

Rod end male thread

Code / Bore size	a'	c'	H	kk'	M	MM	T	wf
ø32	23.5	20.5	22	M14x1.5	14	16	8	5
ø40	23.5	20.5	22	M14x1.5	14	16	8	5
ø50	28.5	26	27	M18x1.5	17	20	11	5
ø63	28.5	26	27	M18x1.5	17	20	11	5
ø80	35.5	32.5	32	M22x1.5	22	25	13	8
ø100	35.5	32.5	41	M26x1.5	27	30	16	8

SCP*3
CMK2
CMA2
SCM
SCG
SCA2
SCS2
CKV2
CAV2/COVP/N2
SSD2
SSG
SSD
CAT
MDC2
MVC
SMG
MSD/MSDG
FC*
STK
SRL3
SRG3
SRM3
SRT3
MRL2
MRG2
SM-25
ShkAbs
FJ
FK
Spd Contr
Ending

Dimensions with mounting bracket

● Axial foot (LB)
SSD2-G5(L)-20 to 100 -LB

• ø20/ø25

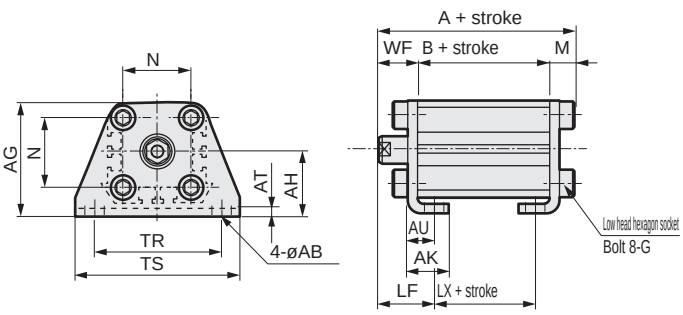

Rod end male thread

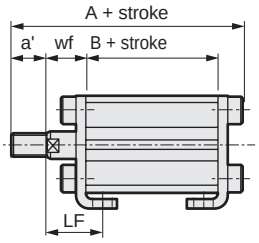

• ø32 to ø100

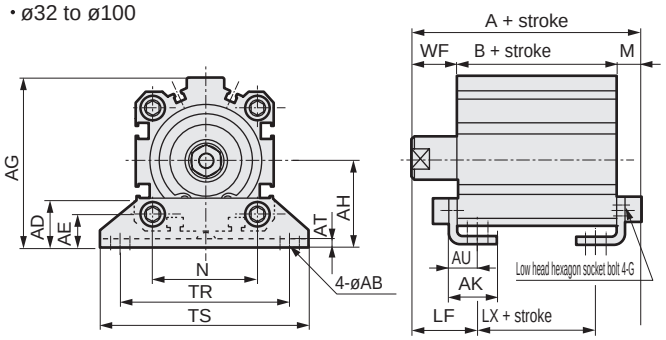

Rod end male thread

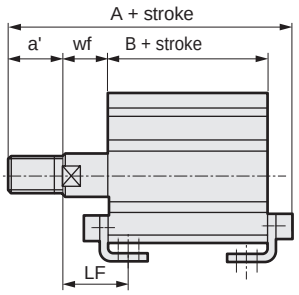

Code / Bore size(mm)	Common dimensions														Female thread							Male thread							
	AB	AD	AE	AG	AH	AK	AT	AU	G	N	TR	TS	M	LF	WF	No switch			With switch			a'	wf	No switch			With switch		
																A	B	CJ	A	B	CJ			A	B	CJ	A	B	CJ
ø20	7	-	-	42	24	15	3.2	9.2	M 6 x 16	25.5	48	62	7.2	20.5	14.5	51.2	29.5	17.5	61.2	39.5	27.5	14	14.5	65.2	29.5	17.5	75.2	39.5	27.5
ø25	7	-	-	46	26	16.5	3.2	10.7	M 6 x 16	28	52	66	7.2	22.5	15	54.7	32.5	17.5	64.7	42.5	27.5	17.5	15	72.2	32.5	17.5	82.2	42.5	27.5
ø32	7	18.5	13	57	30	17	3.2	11.2	M 6 x 16	34	57	71	7.2	25	17	57.2	33	17	67.2	43	27	23.5	15	78.7	33	17	88.7	43	27
ø40	7	18	13	64	33	18.2	3.2	11.2	M 6 x 16	40	64	78	7.2	25	17	63.7	39.5	23.5	73.7	49.5	33.5	23.5	15	85.2	39.5	23.5	95.2	49.5	33.5
ø50	9	22	14	78	39	22.7	3.2	14.7	M 8 x 20	50	79	95	8.2	29.5	18	66.7	40.5	17.5	76.7	50.5	27.5	28.5	15	92.2	40.5	17.5	102.2	50.5	27.5
ø63	11	26	16	91.5	46	25.2	3.2	16.2	M 10 x 25	60	95	113	9.2	31	18	73.2	46	20	83.2	56	30	28.5	15	98.7	46	20	108.7	56	30
ø80	13	31.5	20.5	114	59	30.5	4.5	19.5	M 12 x 40	77	118	140	11.5	35	20	85	53.5	23.5	95	63.5	33.5	35.5	18	118.5	53.5	23.5	128.5	63.5	33.5
ø100	13	35	24	136	71	35.5	6	23	M 12 x 40	94	137	162	13	39	22	98	63	29	108	73	39	35.5	18	129.5	63	29	139.5	73	39

● Clevis bracket (CB)
SSD2-G5(L)-20 to 100 -CB

• ø20/ø25

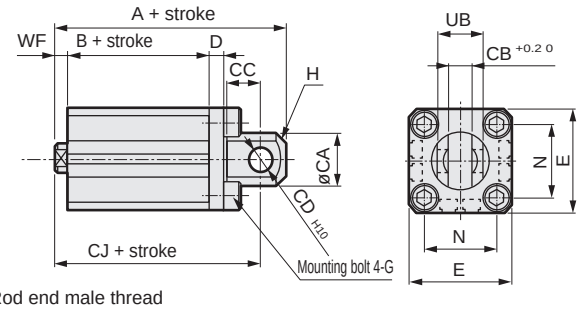

Rod end male thread

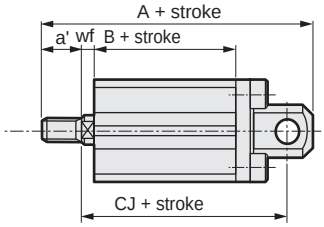

• ø32 to ø100

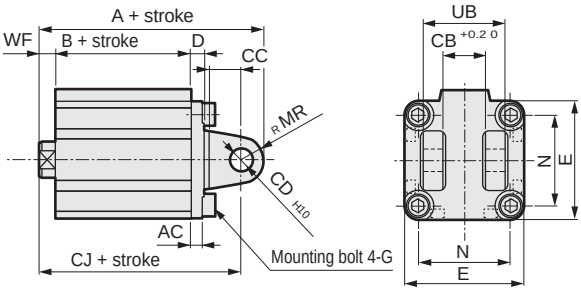

Rod end male thread

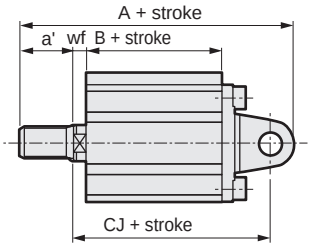

Code / Bore size(mm)	Common dimensions												Female thread							Male thread							
	AC	CA	CB	CC	CD	D	E	G	H	MR	N	UB	WF	No switch			With switch			a'	wf	No switch			With switch		
														A	B	CJ	A	B	CJ			A	B	CJ	A	B	CJ
ø20	-	20	8.2	12	8	5	36	M 6 x 16	C4	-	25.5	16	4.5	61	29.5	52	71	39.5	62	14	4.5	75	29.5	52	85	39.5	62
ø25	-	24	10.2	14	10	5	40	M 6 x 16	C5	-	28	20	5	67.5	32.5	57.5	77.5	42.5	67.5	17.5	5	85	32.5	57.5	95	42.5	67.5
ø32	4.5	-	18.2	14	10	5	45	M 6 x 16	-	10	34	36	7	70	33	60	80	43	70	23.5	5	91.5	33	58	101.5	43	68
ø40	5	-	18.2	14	10	6	52	M 6 x 16	-	10	40	36	7	78.5	39.5	68.5	88.5	49.5	78.5	23.5	5	100	39.5	66.5	110	49.5	76.5
ø50	6	-	22.2	20	14	7	64	M 8 x 20	-	14	50	44	8	90.5	40.5	76.5	100.5	50.5	86.5	28.5	5	116	40.5	73.5	126	50.5	83.5
ø63	7	-	22.2	20	14	8	77	M 10 x 25	-	14	60	44	8	98	46	84	108	56	94	28.5	5	123.5	46	81	133.5	56	91
ø80	9	-	28.2	27	18	10	98	M 12 x 40	-	18	77	56	10	119.5	53.5	101.5	129.5	63.5	111.5	35.5	8	153	53.5	99.5	163	63.5	109.5
ø100	12	-	32.2	31	22	13	117	M 12 x 40	-	22	94	64	12	142	63	120	152	73	130	35.5	8	173.5	63	116	183.5	73	126

Dimensions with mounting bracket

● Rod side flange (FA)
SSD2-G5(L)-20 to 100 -FA
· ø20/ø25

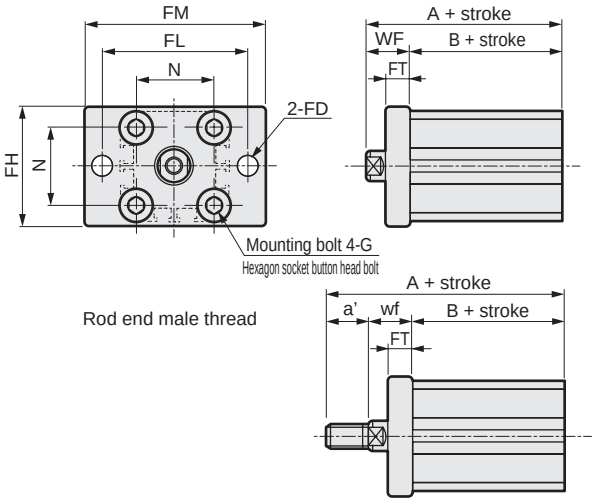

· ø32 to ø100

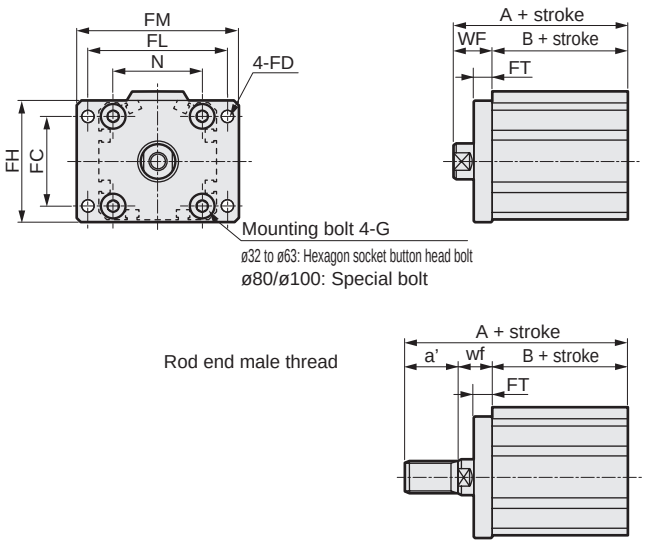

Code / Bore size (mm)	Common dimensions								Female thread					Male thread					
	FC	FD	FH	FL	FM	FT	N	G	WF	No switch		With switch		a'	wf	No switch		With switch	
										A	B	A	B			A	B	A	B
ø20	-	6.6	39	48	60	8	25.5	M6x16	14.5	44	29.5	54	39.5	14	14.5	58	29.5	68	39.5
ø25	-	6.6	42	52	64	8	28	M6x16	15	47.5	32.5	57.5	42.5	17.5	15	65	32.5	75	42.5
ø32	34	5.5	48	56	65	8	34	M6x16	17	50	33	60	43	23.5	15	71.5	33	81.5	43
ø40	40	5.5	54	62	72	8	40	M6x16	17	56.5	39.5	66.5	49.5	23.5	15	78	39.5	88	49.5
ø50	50	6.6	67	76	89	9	50	M8x20	18	58.5	40.5	68.5	50.5	28.5	15	84	40.5	94	50.5
ø63	60	9	80	92	108	9	60	M10x25	18	64	46	74	56	28.5	15	89.5	46	99.5	56
ø80	77	11	99	116	134	11	77	M12x40	20	73.5	53.5	83.5	63.5	35.5	18	107	53.5	117	63.5
ø100	94	11	117	136	154	11	94	M12x40	22	85	63	95	73	35.5	18	116.5	63	126.5	73

● Head side flange (FB)
SSD2-G5(L)-20 to 100 -FB
· ø20/ø25

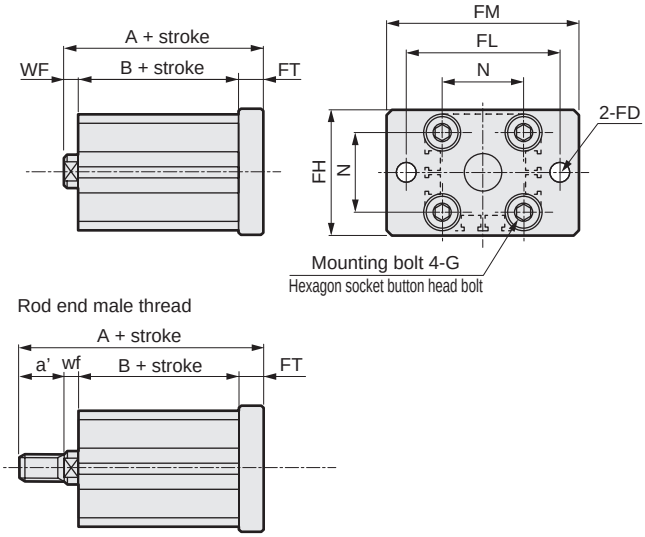

· ø32 to ø100

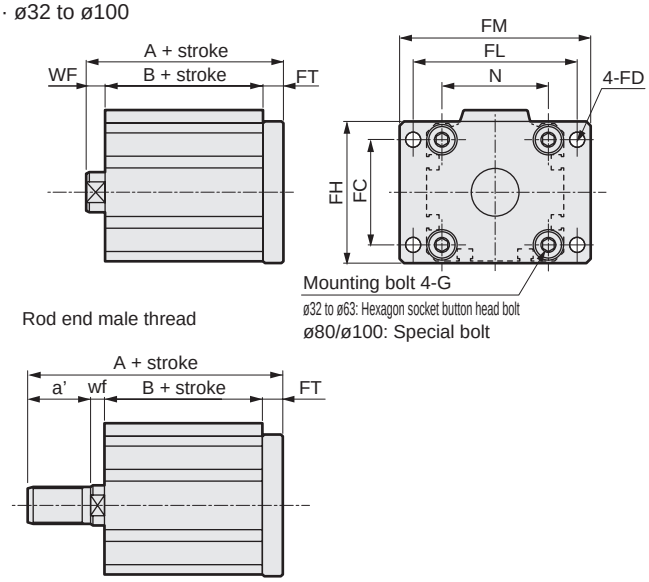

Code / Bore size (mm)	Common dimensions								Female thread					Male thread					
	FC	FD	FH	FL	FM	FT	N	G	WF	No switch		With switch		a'	wf	No switch		With switch	
										A	B	A	B			A	B	A	B
ø20	-	6.6	39	48	60	8	25.5	M6x16	4.5	42	29.5	52	39.5	14	4.5	56	29.5	66	39.5
ø25	-	6.6	42	52	64	8	28	M6x16	5	45.5	32.5	55.5	42.5	17.5	5	63	32.5	73	42.5
ø32	34	5.5	48	56	65	8	34	M6x16	7	48	33	58	43	23.5	5	69.5	33	79.5	43
ø40	40	5.5	54	62	72	8	40	M6x16	7	54.5	39.5	64.5	49.5	23.5	5	76	39.5	86	49.5
ø50	50	6.6	67	76	89	9	50	M8x20	8	57.5	40.5	67.5	50.5	28.5	5	83	40.5	93	50.5
ø63	60	9	80	92	108	9	60	M10x25	8	63	46	73	56	28.5	5	88.5	46	98.5	56
ø80	77	11	99	116	134	11	77	M12x40	10	74.5	53.5	84.5	63.5	35.5	8	108	53.5	118	63.5
ø100	94	11	117	136	154	11	94	M12x40	12	86	63	96	73	35.5	8	117.5	63	127.5	73

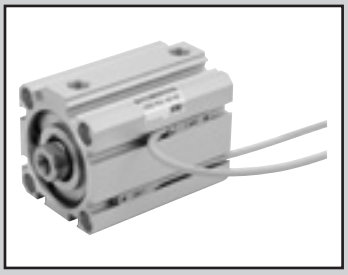

Compact cylinder double acting/single rod/high load/environment-resistant scraper

SSD2-KG5 Series

● Bore size: ø20/ø25/ø32/ø40/ø50/ø63/ø80/ø100

JIS symbol 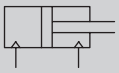

RoHS

Specifications

Item	SSD2-KG5 SSD2-KG5L (with switch)							
Bore size mm	ø20	ø25	ø32	ø40	ø50	ø63	ø80	ø100
Actuation	Double acting							
Working fluid	Compressed air							
Max. working pressure MPa	1.0 (≈150 psi, 10 bar)							
Min. working pressure MPa	0.2 (≈29 psi, 2 bar)					0.15 (≈22 psi, 2 bar)		
Proof pressure MPa	1.6 (≈230 psi, 16 bar)							
Ambient temperature °C	-10 (14°F) to 60 (140°F) (no freezing)							
Port size	M5		Rc1/8		Rc1/4		Rc3/8	
Stroke tolerance mm	$^{+2.0}_{0}$							
Working piston speed mm/s	50 to 500					50 to 300		
Cushion	Rubber cushion							
Lubrication	Not required (use turbine oil class 1 ISO VG32 if necessary for lubrication)							
Allowable absorbed energy J	0.16	0.16	0.40	0.63	0.98	1.56	2.51	3.92

Stroke

Bore size (mm)	Standard stroke (mm)	Max. stroke (mm)	Min. stroke (mm)
ø20	5/10/15/20/25/30/35/40/45/50	50	1
ø25			
ø32	5/10/15/20/25/30/35/40/45/50/75/100	100	
ø40			
ø50	10/15/20/25/30/35/40/45/50/75/100		
ø63			
ø80			
ø100			

*4 : When using the type with switch, refer to the table of the min. stroke with switch.

Min. stroke with switch (2 switches)

Bore size (mm)	T0H/V / T5H/V	T2H/V / T3H/V
ø20	5	5
ø25		
ø32		
ø40		
ø50		
ø63		
ø80		
ø100		

1 : Less than 10 mm with the 2-color LED, off-delay, AC magnetic field proof, T1 or T8* switch is not available.

Custom stroke

● SSD2-KG5 Series

Item	Standard products Standard stroke body with spacer	
Model No.	Refer to How to order.	
Description	A spacer is added to the standard stroke body to adjust the stroke in 1 mm increments.	
Stroke range	Bore size	Stroke range
	20 to 25	1 to 49
	32 to 100	1 to 99
Example of model No.	Model No.: SSD2-KG5-32-38 A +2 mm spacer is added to the SSD2-KG5-32-40 standard cylinder to create 38 mm stroke. B + stroke is 83mm.	

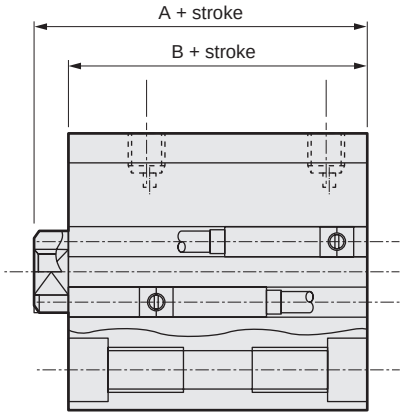

Switch specifications (F-switch)

● 1-color/2-color LED

Item	2-wire proximity	3-wire proximity	2-wire proximity		3-wire proximity		
	F2S	F3S	F2H/F2V	F2YH/F2YV	F3H/F3V	F3PH/F3PV (made to order)	F3YH/F3YV
Applications	Dedicated for programmable controller	For programmable controller, relay	Dedicated for programmable controller		For programmable controller, relay		
Output method	-	NPN output	-		NPN output	PNP output	NPN output
Power supply voltage	-	10 to 28 VDC	-		10 to 28 VDC	4.5 to 28 VDC	10 to 28 VDC
Load voltage	10 to 30 VDC	30 VDC or less	10 to 30 VDC	24 VDC ±10%	30 VDC or less		
Load current	5 to 20 mA	50 mA or less	5 to 20 mA		50 mA or less		
Indicator	LED (Lit when ON)		Yellow LED (Lit when ON)	Red/green LED (Lit when ON)	Yellow LED (Lit when ON)		Red/green LED (Lit when ON)
Leakage current	1 mA or less	10 μA or less	1 mA or less		10 μA or less		
Weight g	1 m:10 3 m:29						

Switch specifications (T-switch)

● 1-color/2-color LED/for AC magnetic field proof

Item	2-wire proximity	2-wire proximity			3-wire proximity				2-wire reed							2-wire proximity
	T1H/T1V	T2H/T2V/T2JH/T2JV	T2YH/T2YV	T2WH/T2WV	T3H/T3V	T3PH/T3PV	T3YH/T3YV	T3WH/T3WV	T0H/T0V		T5H/T5V		T8H/T8V			T2YD(*4) T2YDT
Applications	For programmable controller, relay, compact solenoid valve	Dedicated for programmable controller			For programmable controller, relay				For programmable controller, relay		For programmable controller, relay, IC circuit (no indicator lamp), serial connection		For programmable controller, relay			Dedicated for programmable controller
Output method	-				NPN output	PNP output	NPN output	NPN output	-							
Pwr. supp. V.	-				10 to 28 VDC				-							
Load voltage	85 to 265 VAC	10 to 30 VDC		24 VDC ±10%	30 VDC or less				12/24 VDC	100/110 VAC	5/12/24 VDC	100/110 VAC	12/24 VDC	110 VAC	220 VAC	24 VDC ±10%
Load current	5 to 100 mA	5 to 20 mA (*3)			100 mA or less		50 mA or less		5 to 50 mA	7 to 20 mA	50 mA or less	20 mA or less	5 to 50 mA	7 to 20 mA	7 to 10 mA	5 to 20 mA
Indicator	LED (Lit when ON)	LED (Lit when ON)	Red/green LED (Lit when ON)	Red/green LED (Lit when ON)	LED (Lit when ON)	Yellow LED (Lit when ON)	Red/green LED (Lit when ON)	Red/green LED (Lit when ON)	LED (Lit when ON)		No indicator lamp		LED (Lit when ON)			Red/green LED (Lit when ON)
Leakage current	≤ 1 mA at 100 VAC, ≤ 2 mA at 200 VAC	1 mA or less			10 μA or less				0 mA							1 mA or less
Weight g	1 m:33 3 m:87 5 m:142	1 m:18 3 m:49 5 m:80	1 m:33 3 m:87 5 m:142	1 m:18 3 m:49 5 m:80	1 m:18 3 m:49 5 m:80		1 m:33 3 m:87 5 m:142	1 m:18 3 m:49 5 m:80	1 m:18 3 m:49 5 m:80				1 m:33 3 m:87 5 m:142			1 m:61 3 m:166 5 m:272

*1 : Refer to Ending Page 1 for detailed switch specifications and dimensions.
*2 : Switches other than the above models, such as switches with connectors, are also available. Refer to Ending Page 1.
*3 : The max. load current is 20 mA at 25°C. The current is lower than 20 mA if the operating ambient temperature around the switch is higher than 25˚C. (5 to 10 mA at 60°C)
*4 : Switch for AC magnetic field (T2YD/T2YDT) cannot be used in DC magnetic field.
*5 : The F-switch uses a bend-resistant lead wire.

Theoretical thrust table

(Unit: N)

Bore size (mm)	Operating direction	Working pressure MPa 0.15	0.2	0.3	0.4	0.5	0.6	0.7	0.8	0.9	1.0
ø20	Push	-	62.8	94.2	1.26×10^2	1.57×10^2	1.88×10^2	2.20×10^2	2.51×10^2	2.83×10^2	3.14×10^2
	Pull	-	47.1	70.7	94.2	1.18×10^2	1.41×10^2	1.65×10^2	1.88×10^2	2.12×10^2	2.36×10^2
ø25	Push	-	98.2	1.47×10^2	1.96×10^2	2.45×10^2	2.95×10^2	3.44×10^2	3.93×10^2	4.42×10^2	4.91×10^2
	Pull	-	75.6	1.13×10^2	1.51×10^2	1.89×10^2	2.27×10^2	2.64×10^2	3.02×10^2	3.40×10^2	3.78×10^2
ø32	Push	-	1.61×10^2	2.41×10^2	3.22×10^2	4.02×10^2	4.83×10^2	5.63×10^2	6.43×10^2	7.24×10^2	8.04×10^2
	Pull	-	1.21×10^2	1.81×10^2	2.41×10^2	3.02×10^2	3.62×10^2	4.22×10^2	4.83×10^2	5.43×10^2	6.03×10^2
ø40	Push	-	2.51×10^2	3.77×10^2	5.03×10^2	6.28×10^2	7.54×10^2	8.80×10^2	1.01×10^3	1.13×10^3	1.26×10^3
	Pull	-	2.11×10^2	3.17×10^2	4.22×10^2	5.28×10^2	6.33×10^2	7.39×10^2	8.44×10^2	9.50×10^2	1.06×10^3
ø50	Push	-	3.93×10^2	5.89×10^2	7.85×10^2	9.82×10^2	1.18×10^3	1.37×10^3	1.57×10^3	1.77×10^3	1.96×10^3
	Pull	-	3.30×10^2	4.95×10^2	6.60×10^2	8.25×10^2	9.90×10^2	1.15×10^3	1.32×10^3	1.48×10^3	1.65×10^3
ø63	Push	4.68×10^2	6.23×10^2	9.35×10^2	1.25×10^3	1.56×10^3	1.87×10^3	2.18×10^3	2.49×10^3	2.81×10^3	3.12×10^3
	Pull	4.20×10^2	5.61×10^2	8.41×10^2	1.12×10^3	1.40×10^3	1.68×10^3	1.96×10^3	2.24×10^3	2.52×10^3	2.80×10^3
ø80	Push	7.54×10^2	1.01×10^3	1.51×10^3	2.01×10^3	2.51×10^3	3.02×10^3	3.52×10^3	4.02×10^3	4.52×10^3	5.03×10^3
	Pull	6.80×10^2	9.07×10^2	1.36×10^3	1.81×10^3	2.27×10^3	2.72×10^3	3.17×10^3	3.63×10^3	4.08×10^3	4.54×10^3
ø100	Push	1.18×10^3	1.57×10^3	2.36×10^3	3.14×10^3	3.93×10^3	4.71×10^3	5.50×10^3	6.28×10^3	7.07×10^3	7.85×10^3
	Pull	1.07×10^3	1.43×10^3	2.14×10^3	2.86×10^3	3.57×10^3	4.29×10^3	5.00×10^3	5.72×10^3	6.43×10^3	7.15×10^3

How to order

No switch (without magnet for switch)

SSD2-KG5 - 20 ◯ - 5 ———— N - LB - I

With switch (built-in magnet for switch)

SSD2-KG5L - 20 ◯ - 5 - T0H - R - N - LB - I

Ⓐ Model No.
Ⓑ Bore size
Ⓒ Port thread
Ⓓ Stroke
Ⓔ Switch model No. *4
Ⓕ Switch quantity
Ⓖ Option
Ⓗ Mounting bracket *1 *2
Ⓘ Accessory *3

Code	Description
Ⓐ Model No.	
SSD2-KG5	Double acting/single rod/high load/environment-resistant scraper (made-to-order product)
SSD2-KG5L	Double acting/single rod/high load/environment-resistant scraper/switch (MTO)
Ⓑ Bore size (mm)	
20	ø20
25	ø25
32	ø32
40	ø40
50	ø50
63	ø63
80	ø80
100	ø100
Ⓒ Port thread	
Blank	Rc thread/M5 thread
N	NPT thread (ø32 and over)
G	G thread (ø32 and over)
Ⓓ Stroke (mm)	
Refer to the stroke table on the following page.	

Ⓔ Switch model No.

Lead wire Straight	Lead wire L-shaped	Contact	Voltage AC	Voltage DC	Indicator	Lead wire	20	25	32	40	50	63	80	100
-	F2S*	Proximity		●	1-color LED	2-wire	●	●						
-	F3S*	Proximity		●	1-color LED	3-wire	●	●						
F2H*	F2V*	Proximity		●	1-color LED	2-wire	●	●						
F3H*	F3V*	Proximity		●	1-color LED	3-wire	●	●						
F3PH*	F3PV*	Proximity		●	1-color LED (PNP output) (custom)	3-wire	●	●						
F2YH*	F2YV*	Proximity		●	2-color LED	2-wire	●	●						
F3YH*	F3YV*	Proximity		●	2-color LED	3-wire	●	●						
T0H*	T0V*	Reed	●	●	1-color LED	2-wire	●	●	●	●	●	●	●	●
T5H*	T5V*	Reed	●	●	No indicator lamp	2-wire	●	●	●	●	●	●	●	●
T8H*	T8V*	Reed	●	●	1-color LED	2-wire				●	●	●	●	●
T1H*	T1V*	Proximity	●		1-color LED	2-wire	●	●	●	●	●	●	●	●
T2H*	T2V*	Proximity		●	1-color LED	2-wire	●	●	●	●	●	●	●	●
T3H*	T3V*	Proximity		●	1-color LED	3-wire	●	●	●	●	●	●	●	●
T3PH*	T3PV*	Proximity		●	1-color LED (PNP output)	3-wire	●	●	●	●	●	●	●	●
T2WH*	T2WV*	Proximity		●	2-color LED	2-wire	●	●	●	●	●	●	●	●
T2YH*	T2YV*	Proximity		●	2-color LED	2-wire	●	●	●	●	●	●	●	●
T3WH*	T3WV*	Proximity		●	2-color LED	3-wire	●	●	●	●	●	●	●	●
T3YH*	T3YV*	Proximity		●	2-color LED	3-wire	●	●	●	●	●	●	●	●
T2YD*	-	Proximity		●	2-color LED AC magnetic field	2-wire	●	●	●	●	●	●	●	●
T2YDT*	-	Proximity		●	2-color LED AC magnetic field	2-wire	●	●	●	●	●	●	●	●
T2JH*	T2JV*	Proximity		●	1-color LED off-delay	2-wire	●	●	●	●	●	●	●	●

* Lead wire length	
Blank	1 m (standard)
3	3 m (option)
5	5 m (option) *5

Ⓕ Switch quantity	
R	1 on rod side
H	1 on head side
D	2

Ⓖ Option	
Blank	Rod end female thread
N	Rod end male thread

Ⓗ Mounting bracket	
Blank	Without mounting bracket
LB	Axial foot
CB	Clevis bracket (pin and snap ring included)
FA	Rod side flange
FB	Head side flange

Ⓘ Accessory (available when rod end male thread "N" is selected)	
I	Rod eye
Y	Rod clevis (pin and snap ring included)

⚠ Precautions for model No. selection

*1 : The mounting bracket is included at shipment.
*2 : "I" and "Y" cannot be selected together. The WF/wf dimension of the cylinder for "LB" and "FA" is set 10 mm longer than that of standard products. The number of the specified protruding dimension will be added at the end of the model No. printed on the metal plate on the body.
*3 : "I" and "Y" cannot be selected together.
*4 : Switches are shipped with the product. Contact CKD if assembling before shipment is necessary.
*5 : F-switch cannot be selected.

[Example of model No.]

SSD2-KG5L-32-5-T0H-R-N

Model: Compact cylinder
Double acting/single rod/high load/environment-resistant scraper

Ⓑ Bore size : ø32 mm
Ⓒ Port thread : Rc thread
Ⓓ Stroke : 5 mm
Ⓔ Switch model No.: Reed T0H switch
Lead wire 1 m
Ⓕ Switch quantity : 1 on rod side
Ⓖ Option : Rod end male thread

[Stroke table]

Stroke (mm)		Applicable bore size							
		20	25	32	40	50	63	80	100
Standard stroke	5	●	●	●	●				
	10	●	●	●	●	●	●	●	●
	15	●	●	●	●	●	●	●	●
	20	●	●	●	●	●	●	●	●
	25	●	●	●	●	●	●	●	●
	30	●	●	●	●	●	●	●	●
	35	●	●	●	●	●	●	●	●
	40	●	●	●	●	●	●	●	●
	45	●	●	●	●	●	●	●	●
	50	●	●	●	●	●	●	●	●
	75			●	●	●	●	●	●
	100			●	●	●	●	●	●
Min. stroke (mm) *1		1							
Max. stroke (mm)		50		100					
Custom stroke *2		In 1 mm increments							

1: Less than 5 mm for 1-color LED switch and less than 10 mm for the 2-color LED, off-delay, AC magnetic field proof, T1 or T8* switch are not available.
Refer to page 1002 for the number of installed switches and the min. stroke.
*2 : The total length is the same as that of the next longer standard stroke.

How to order switch

SW - T0H

Switch model No.
(Item Ⓔ on page 1004)

Cylinder weight table (the weight of the switches is when there are 2 cylinder switches.)

(Unit: g)

Stroke (mm)	5		10		15		20		25		30		35		40		45		50		75		100	
Bore size (mm)	No switch	Switch	No switch	Switch	No switch	Switch	No switch	Switch	No switch	Switch	No switch	Switch	No switch	Switch	No switch	Switch	No switch	Switch	No switch	Switch	No switch	Switch	No switch	Switch
ø20	107	182	120	195	133	208	145	220	158	233	170	245	182	257	195	270	206	281	220	295	-	-	-	-
ø25	146	237	162	253	178	269	194	285	209	300	226	317	242	333	258	349	274	365	290	381	-	-	-	-
ø32	230	344	251	365	272	386	294	408	316	430	338	452	360	474	381	495	403	517	424	538	597	646	705	753
ø40	323	466	349	492	376	519	402	545	428	571	455	598	482	625	508	651	535	678	561	704	779	837	911	969
ø50	-	-	560	754	602	796	645	839	688	882	729	923	771	965	813	1007	855	1049	897	1091	1244	1301	1454	1511
ø63	-	-	813	1092	868	1147	923	1202	979	1258	1034	1313	1089	1368	1144	1423	1199	1478	1254	1533	1744	1808	2019	2083
ø80	-	-	1413	1826	1500	1913	1586	1999	1673	2086	1760	2173	1847	2260	1933	2346	2020	2433	2106	2519	2886	2952	3318	3384
ø100	-	-	2106	2673	2220	2787	2334	2901	2448	3015	2561	3128	2675	3242	2789	3356	2903	3470	3017	3584	4082	4154	4652	4724

How to order mounting bracket

Bore size (mm) / Mounting bracket	ø20	ø25	ø32	ø40	ø50	ø63	ø80	ø100
Foot (LB)	SSD2-LB-20	SSD2-LB-25	SSD2-LB-32	SSD2-LB-40	SSD2-LB-50	SSD2-LB-63	SSD2-LB-80	SSD2-LB-100
Flange (FA/FB)	SSD2-FA-20	SSD2-FA-25	SSD2-FA-32	SSD2-FA-40	SSD2-FA-50	SSD2-FA-63	SSD2-FA-80	SSD2-FA-100
Clevis bracket (CB)	SSD2-CB-20	SSD2-CB-25	SSD2-CB-32	SSD2-CB-40	SSD2-CB-50	SSD2-CB-63	SSD2-CB-80	SSD2-CB-100

*1:The foot mounting bracket is provided as 2 pcs./set.

Internal structure and parts list

● SSD2-KG5L-20□25
(double acting/high load/environment-resistant scraper/with switch)

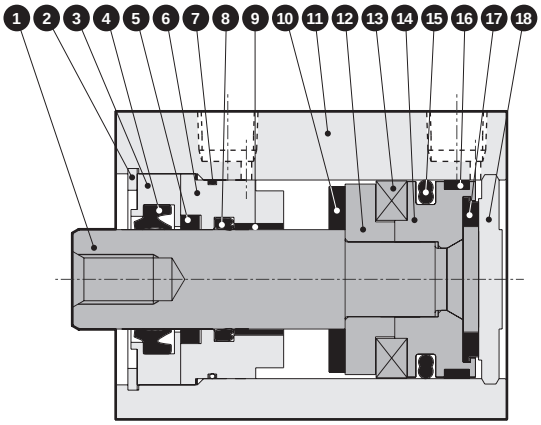

● SSD2-KG5L-32 to 50
(double acting/high load/environment-resistant scraper/with switch)

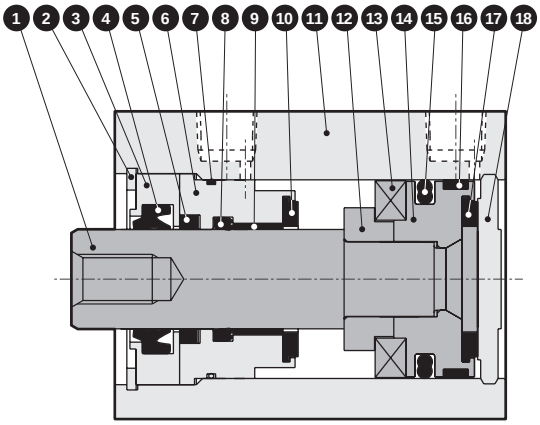

● SSD2-KG5-20□25
(double acting/high load/environment-resistant scraper)

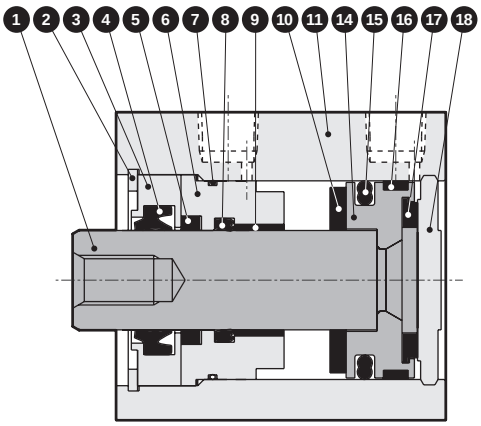

● SSD2-KG5-32 to 50
(double acting/high load/environment-resistant scraper)

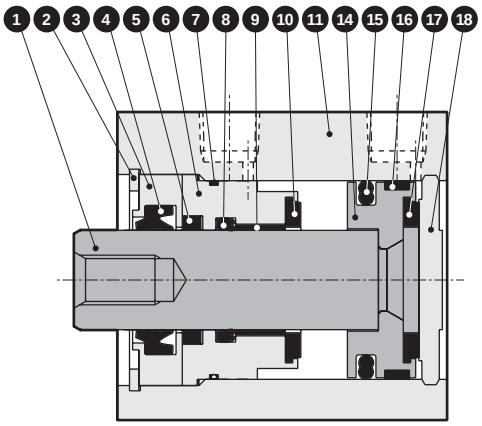

Main parts list

Part No.	Part name	Material	Remarks
1	Piston rod	ø20/ø25: Stainless steel ø32 to ø50: Steel	Industrial chrome plating
2	C-snap ring	Steel	Zinc phosphate
3	Rod metal 1	Special aluminum	Chromate
4	Scraper	Nitrile rubber	
5	Lube keeping structure	Special rubber	
6	Rod metal 2	Special aluminum	Alumite
7	Rod metal gasket	Nitrile rubber	
8	Rod packing	Nitrile rubber	
9	Bush	Oiles drymet	
10	Cushion rubber R	Urethane rubber	
11	Body	Aluminum alloy	Hard alumite
12	Spacer	Special resin	
13	Magnet	Plastic	
14	Piston	Aluminum alloy	Chromate
15	Piston packing	Nitrile rubber	
16	Wear ring	Polyacetal resin	
17	Cushion rubber H	Urethane rubber	
18	Cover	ø20/ø25: Stainless steel ø32 to ø50: Aluminum alloy	ø32 to ø50: Alumite

Consumable parts list

Part name / Bore size (mm)	Kit No.	Consumable parts No.
ø20	SSD2-KG5-20K	4 5 7 8 10 15 16 17
ø25	SSD2-KG5-25K	
ø32	SSD2-KG5-32K	
ø40	SSD2-KG5-40K	
ø50	SSD2-KG5-50K	

Internal structure and parts list

● SSD2-KG5L-63 to 100 (double acting/high load/environment-resistant scraper/with switch)

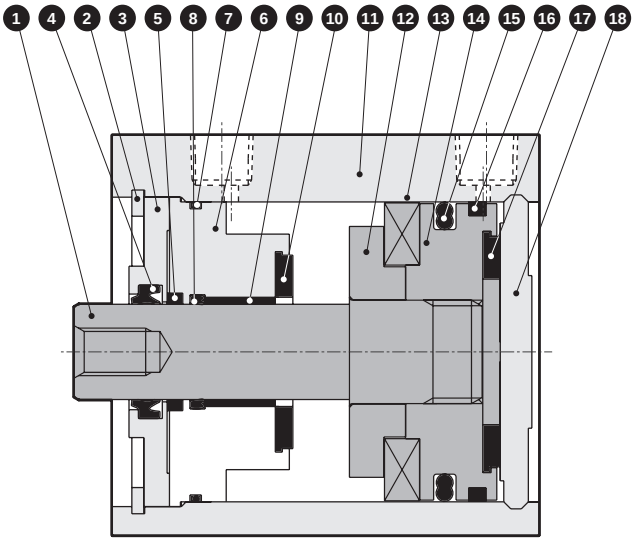

● SSD2-KG5-63 to 100 (double acting/high load/environment-resistant scraper)

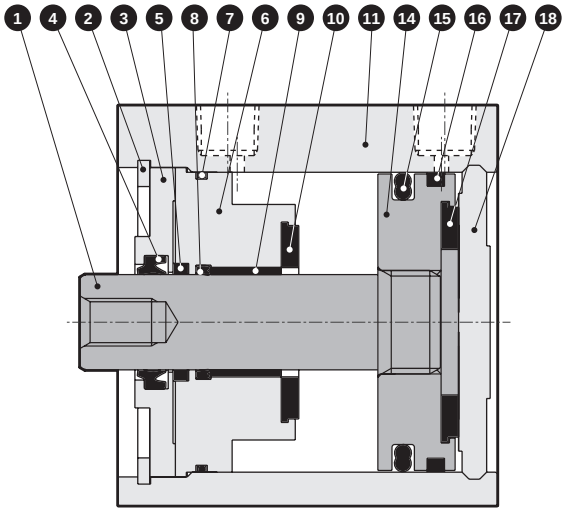

Main parts list

No.	Part name	Material	Remarks	No.	Part name	Material	Remarks
1	Piston rod	Steel	Industrial chrome plating	10	Cushion rubber R	Urethane rubber	
2	C-snap ring	Steel	Zinc phosphate	11	Body	Aluminum alloy	Hard alumite
3	Rod metal 1	Aluminum alloy	Chromate	12	Spacer	Aluminum alloy	Chromate
4	Scraper	Nitrile rubber		13	Magnet	Plastic	
5	Lube keeping structure	Special rubber		14	Piston	Aluminum alloy	Chromate
6	Rod metal 2	Aluminum alloy	Chromate	15	Piston packing	Nitrile rubber	
7	Rod metal gasket	Nitrile rubber		16	Wear ring	Polyacetal resin	
8	Rod packing	Nitrile rubber		17	Cushion rubber H	Urethane rubber	
9	Bush	Oiles drymet		18	Cover	Aluminum alloy	Alumite

Repair parts list

Part name / Bore size (mm)	Kit No.	Repair parts No.
ø63	SSD2-KG5-63K	4 5 7 8 10 15 16 17
ø80	SSD2-KG5-80K	
ø100	SSD2-KG5-100K	

dimensions

● SSD2-KG5L-20, 25 (with switch, TOH/V, T5H/V, T2H/V, T3H/V)

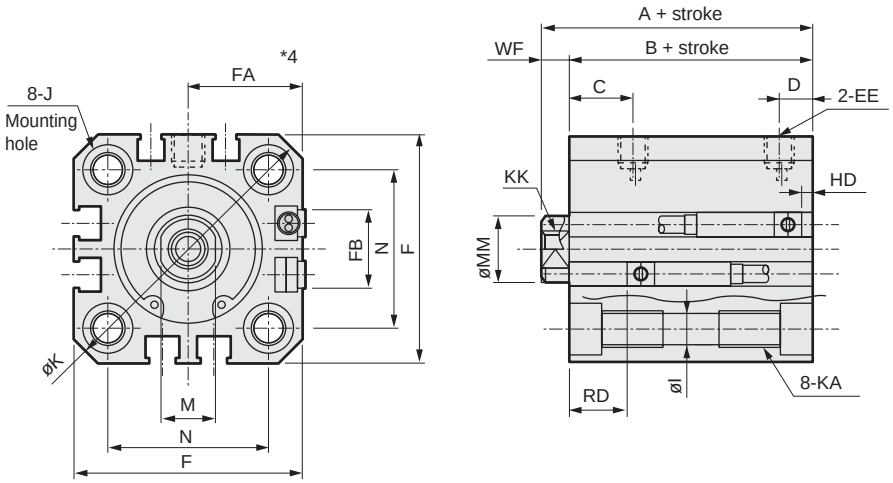

● Rod end male thread

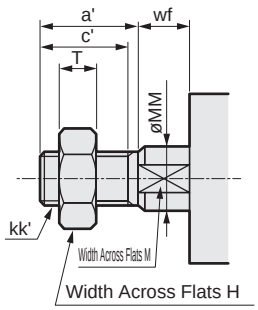

● SSD2-KG5-20, 25 (without switch)

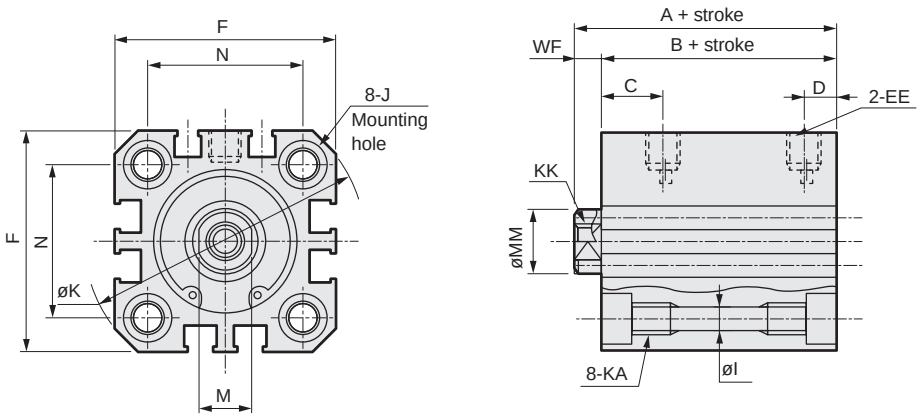

Code / Bore size	No switch A*1	No switch B*1	Common dimensions with switch A*1	B*1	C	D	EE	F	FA*4	FB
ø20	39	34.5	49	44.5	18	5.5	M5	36	18.5(22)	12.5
ø25	42.5	37.5	52.5	47.5	21	6	M5	40	20.5(24)	13.5

Code / Bore size	Common dimensions with switch I	J	K	KA	KK	M	MM	N	WF
ø20	5.5	9 spot face depth 5.5	47	M6 depth 11	M5 depth 7	8	10	25.5	4.5
ø25	5.5	9 spot face depth 5.5	51	M6 depth 11	M6 depth 12	10	12	28	5

Switch dimensions / Bore size	Reed/proximity 1-color HD	Reed/proximity 1-color RD	Proximity 2-color HD	Proximity 2-color RD
ø20	6	18.5	4.5	18.5
ø25	5.5	22	4	22

Switch dimensions / Bore size	Proximity F2H/V, F3H/V F2YH/V/F3YH/V HD	Proximity F2H/V, F3H/V F2YH/V/F3YH/V RD	Proximity F2S/F3S HD	Proximity F2S/F3S RD
ø20	10.5	23	9	23
ø25	10	26.5	8.5	26.5

*1: To calculate A+ stroke or B+ stroke when using custom stroke, apply the next longer standard stroke (instead of the custom stroke) to the stroke value. (Example) If the custom stroke is 7 mm, apply the standard stroke of 10 mm.

*2: HD and RD dimensions for 5 mm stroke differ from these dimensions according to the setting.

***3: Refer to page 1044 for HD, RD and protruding dimensions of the 2-color LED, off-delay, AC magnetic field proof, T1* and T8* switches.**

*4: Dimensions in ( ) of FA are for the L-shaped lead wire type.

***5: For dimensions of individual accessories, refer to pages 1046 to 1049.**

Rod end male thread

Code / Bore size	a'	c'	H	kk'	M	MM	T	wf
ø20	14	12	13	M8	8	10	5	4.5
ø25	17.5	15	17	M 10 x 1.25	10	12	6	5

Dimensions

● SSD2-KG5L-32 to 100 (with switch, TOH/V, T5H/V, T2H/V, T3H/V)

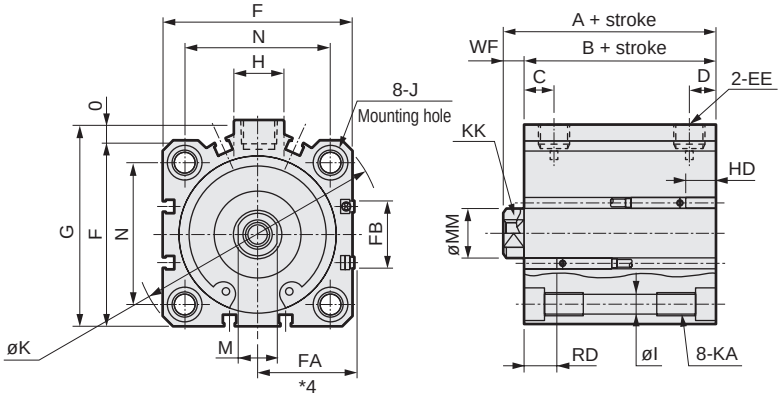

● Rod end male thread

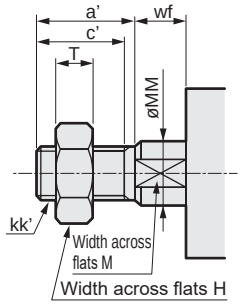

● SSD2-32 to 100 (without switch)

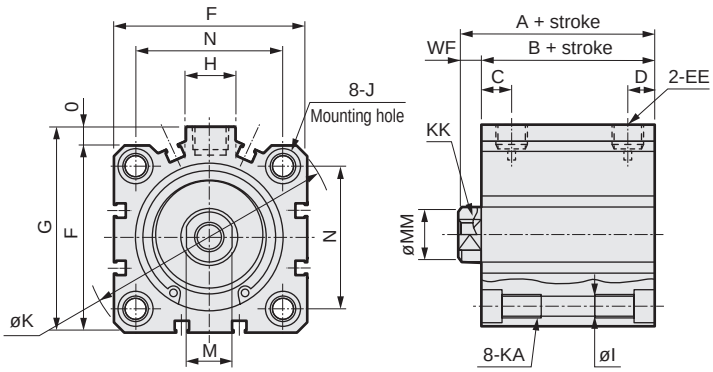

Code / Bore size	No switch A *1	No switch B *1	Common dimensions with switch A *1	B *1	C	D	EE	F	FA *3	FB	G	H
ø32	50(60)	43(53)	60	53	18	8	Rc1/8	45	23(26.5)	20.5	49.5	12.5
ø40	56.5(66.5)	49.5(59.5)	66.5	59.5	22	8.5	Rc1/8	52	26.5(30)	27.5	57	15
ø50	58.5(68.5)	50.5(60.5)	68.5	60.5	20.5	10.5	Rc1/4	64	32.5(36)	28.5	71	18
ø63	64(74)	56(66)	74	66	23	11	Rc1/4	77	39(42.5)	28.5	84	23
ø80	73.5(83.5)	63.5(73.5)	83.5	73.5	26	13	Rc3/8	98	49.5(53)	28.5	104	31
ø100	85(95)	73(83)	95	83	33	15	Rc3/8	117	59(62.5)	28.5	123.5	38

Code / Bore size	Common dimensions with switch I	J	K	KA	KK	M	MM	N	O	WF
ø32	5.5	9 spot face depth 5.5	60	M6 depth 11	M8 depth 13	14	16	34	4.5	7
ø40	5.5	9 spot face depth 5.5	69	M6 depth 11	M8 depth 13	14	16	40	5	7
ø50	6.9	11 spot face depth 6.5	86	M8 depth 13	M10 depth 15	17	20	50	7	8
ø63	8.7	14 spot face depth 9	103	M10 depth 25	M10 depth 15	17	20	60	7	8
ø80	10.5	17.5 spot face depth 11	132	M12 depth 28	M16 depth 21	22	25	77	6	10
ø100	10.5	17.5 spot face depth 11	156	M12 depth 28	M20 depth 27	27	30	94	6.5	12

Switch dimensions / Bore size	Reed/proximity 1-color HD	Reed/proximity 1-color RD	Proximity 2-color HD	Proximity 2-color RD	T8H/V switch HD	T8H/V switch RD
ø32	8.5	24	7	22.5	-	-
ø40	9.5	29.5	8	28	3.5	23.5
ø50	10	30	8.5	28.5	4	24
ø63	17.5	28	16	26.5	11.5	22
ø80	22	30.5	20.5	29	16	24.5
ø100	28	34.5	26.5	33	22	28.5

*1 : To calculate A+ stroke or B+ stroke when using custom stroke, apply the next longer standard stroke (instead of the custom stroke) to the stroke value. (Example) If the custom stroke is 7 mm, apply the standard stroke of 10 mm.
*2 : HD and RD dimensions for 5 mm stroke differ from these dimensions according to the setting.
*3 : Dimensions in ( ) of FA are for the L-shaped lead wire.
*4 : For dimensions of individual accessories, refer to pages 1046 to 1049.
*5 : Dimensions in ( ) of codes A and B are for strokes of more than 50 mm.

Rod end male thread

Code / Bore size	a'	c'	H	kk'	M	MM	T	wf
ø32	23.5	20.5	22	M14x1.5	14	16	8	5
ø40	23.5	20.5	22	M14x1.5	14	16	8	5
ø50	28.5	26	27	M18x1.5	17	20	11	5
ø63	28.5	26	27	M18x1.5	17	20	11	5
ø80	35.5	32.5	32	M22x1.5	22	25	13	8
ø100	35.5	32.5	41	M26x1.5	27	30	16	8

Dimensions with mounting bracket

● Axial foot (LB)

SSD2-KG5(L)-20 to 100 -LB

• ø20/ø25

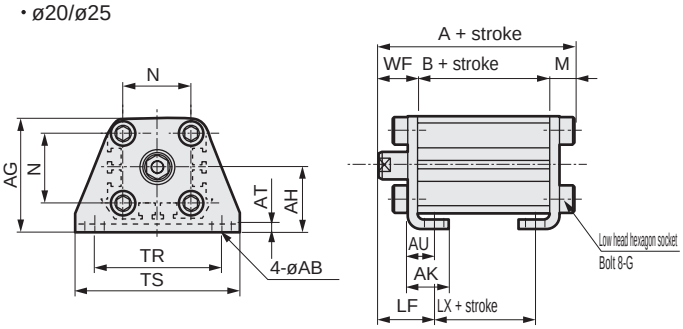

• ø32 to ø100

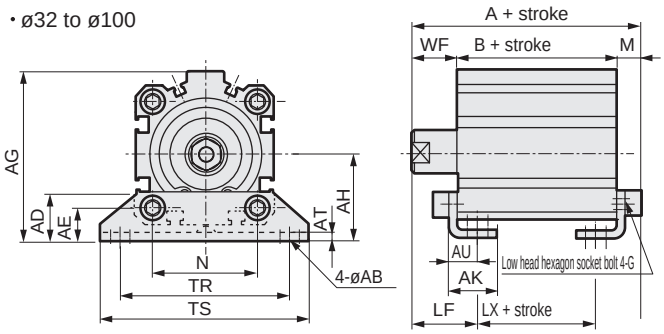

Rod end male thread

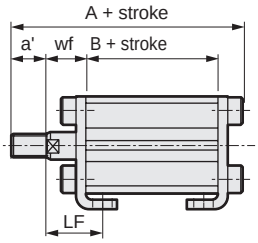

Rod end male thread

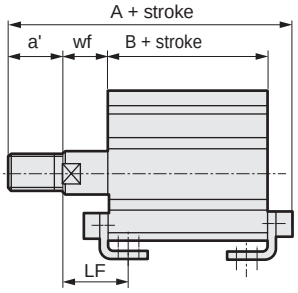

Code	Common dimensions														Female thread							Male thread							
Bore size (mm)	AB	AD	AE	AG	AH	AK	AT	AU	G	N	TR	TS	M	LF	WF	No switch			With switch			a'	wf	No switch			With switch		
																A	B	LX	A	B	LX			A	B	LX	A	B	LX
ø20	7	-	-	42	24	15	3.2	9.2	M 6 x 16	25.5	48	62	7.2	20.5	14.5	56.2	34.5	22.5	66.2	44.5	32.5	14	14.5	70.2	34.5	22.5	80.2	44.5	32.5
ø25	7	-	-	46	26	16.5	3.2	10.7	M 6 x 16	28	52	66	7.2	22.5	15	59.7	37.5	22.5	69.7	47.5	32.5	17.5	15	77.2	37.5	22.5	87.2	47.5	32.5
ø32	7	18.5	13	57	30	17	3.2	11.2	M 6 x 16	34	57	71	7.2	25	17	67.2	43	27	77.2	53	37	23.5	15	88.7	43	27	98.7	53	37
ø40	7	18	13	64	33	18.2	3.2	11.2	M 6 x 16	40	64	78	7.2	25	17	73.7	49.5	33.5	83.7	59.5	43.5	23.5	15	95.2	49.5	33.5	105.2	59.5	43.5
ø50	9	22	14	78	39	22.7	3.2	14.7	M 8 x 20	50	79	95	8.2	29.5	18	76.7	50.5	27.5	86.7	60.5	37.5	28.5	15	102.2	50.5	27.5	112.2	60.5	37.5
ø63	11	26	16	91.5	46	25.2	3.2	16.2	M 10 x 25	60	95	113	9.2	31	18	83.2	56	30	93.2	66	40	28.5	15	108.7	56	30	118.7	66	40
ø80	13	31.5	20.5	114	59	30.5	4.5	19.5	M 12 x 40	77	118	140	11.5	35	20	95	63.5	33.5	105	73.5	43.5	35.5	18	128.5	63.5	33.5	138.5	73.5	43.5
ø100	13	35	24	136	71	35.5	6	23	M 12 x 40	94	137	162	13	39	22	108	73	39	118	83	49	35.5	18	139.5	73	39	149.5	83	49

● Clevis bracket (CB)

SSD2-KG5(L)-20 to 100 -CB

• ø20/ø25

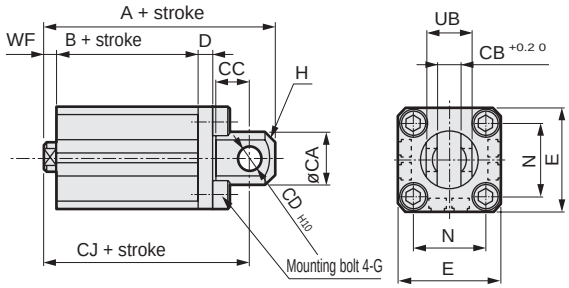

• ø32 to ø100

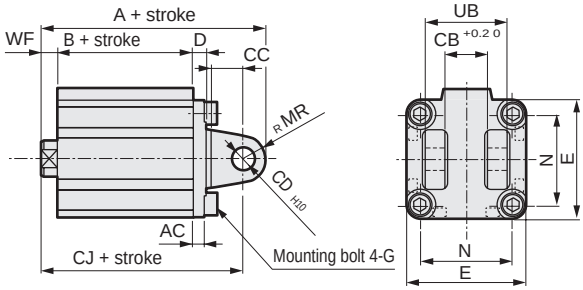

Rod end male thread

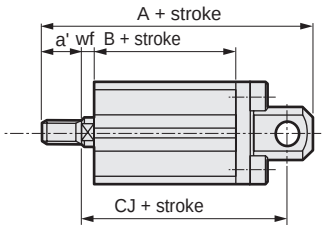

Rod end male thread

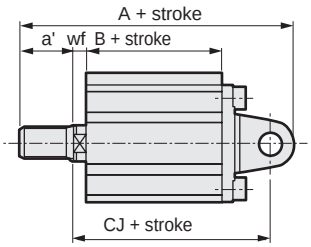

Code	Common dimensions												Female thread							Male thread							
Bore size (mm)	AC	CA	CB	CC	CD	D	E	G	H	MR	N	UB	WF	No switch			With switch			a'	wf	No switch			With switch		
														A	B	CJ	A	B	CJ			A	B	CJ	A	B	CJ
ø20	-	20	8.2	12	8	5	36	M 6 x 16	C4	-	25.5	16	4.5	66	34.5	57	76	44.5	67	14	4.5	80	34.5	57	90	44.5	67
ø25	-	24	10.2	14	10	5	40	M 6 x 16	C5	-	28	20	5	72.5	37.5	62.5	82.5	47.5	72.5	17.5	5	90	37.5	62.5	100	47.5	72.5
ø32	4.5	-	18.2	14	10	5	45	M 6 x 16	-	10	34	36	7	80	43	70	90	53	80	23.5	5	101.5	43	68	111.5	53	78
ø40	5	-	18.2	14	10	6	52	M 6 x 16	-	10	40	36	7	88.5	49.5	78.5	98.5	59.5	88.5	23.5	5	110	49.5	76.5	120	59.5	86.5
ø50	6	-	22.2	20	14	7	64	M 8 x 20	-	14	50	44	8	100.5	50.5	86.5	110.5	60.5	96.5	28.5	5	126	50.5	83.5	136	60.5	93.5
ø63	7	-	22.2	20	14	8	77	M 10 x 25	-	14	60	44	8	108	56	94	118	66	104	28.5	5	133.5	56	91	143.5	66	101
ø80	9	-	28.2	27	18	10	98	M 12 x 40	-	18	77	56	10	129.5	63.5	111.5	139.5	73.5	121.5	35.5	8	163	63.5	109.5	173	73.5	119.5
ø100	12	-	32.2	31	22	13	117	M 12 x 40	-	22	94	64	12	152	73	130	162	83	140	35.5	8	183.5	73	126	193.5	83	136

Dimensions with mounting bracket

● Rod side flange (FA)
SSD2-KG5(L)-20 to 100 -FA

· ø20/ø25

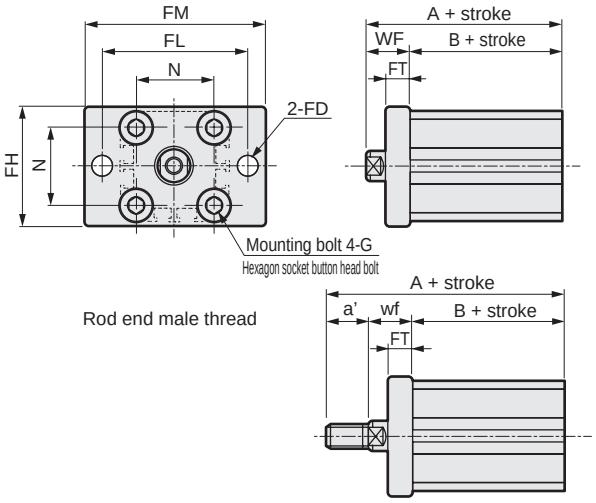

· ø32 to ø100

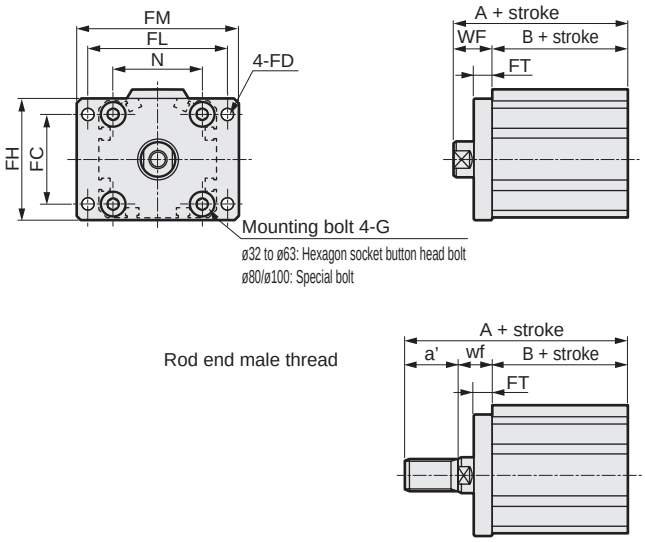

Code / Bore size (mm)	Common dimensions								Female thread					Male thread					
	FC	FD	FH	FL	FM	FT	N	G	WF	No switch		With switch		a'	wf	No switch		With switch	
										A	B	A	B			A	B	A	B
ø20	-	6.6	39	48	60	8	25.5	M6x16	14.5	49	34.5	59	44.5	14	14.5	63	34.5	73	44.5
ø25	-	6.6	42	52	64	8	28	M6x16	15	52.5	37.5	62.5	47.5	17.5	15	70	37.5	80	47.5
ø32	34	5.5	48	56	65	8	34	M6x16	17	60	43	70	53	23.5	15	81.5	43	91.5	53
ø40	40	5.5	54	62	72	8	40	M6x16	17	66.5	49.5	76.5	59.5	23.5	15	88	49.5	98	59.5
ø50	50	6.6	67	76	89	9	50	M8x20	18	68.5	50.5	78.5	60.5	28.5	15	94	50.5	104	60.5
ø63	60	9	80	92	108	9	60	M10x25	18	74	56	84	66	28.5	15	99.5	56	109.5	66
ø80	77	11	99	116	134	11	77	M12x40	20	83.5	63.5	93.5	73.5	35.5	18	117	63.5	127	73.5
ø100	94	11	117	136	154	11	94	M12x40	22	95	73	105	83	35.5	18	126.5	73	136.5	83

● Head side flange (FB)
SSD2-KG5(L)-20 to 100 -FB

· ø20/ø25

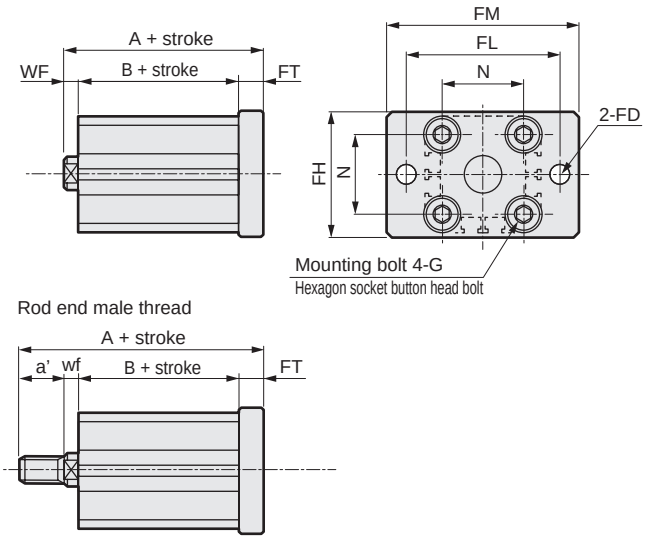

· ø32 to ø100

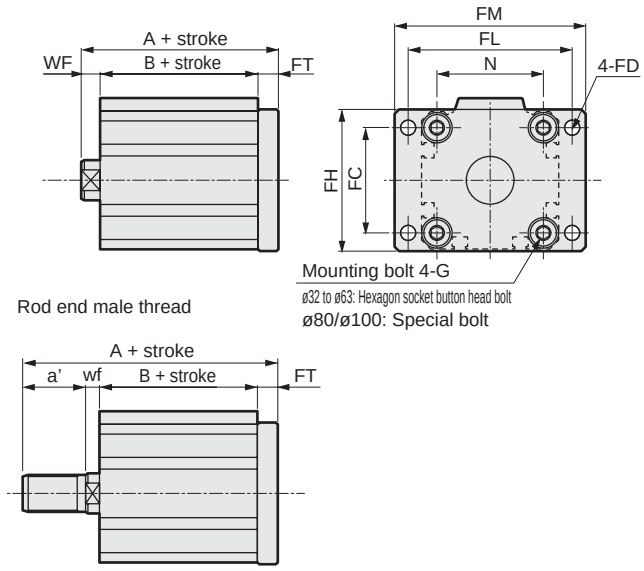

Code / Bore size (mm)	Common dimensions								Female thread					Male thread					
	FC	FD	FH	FL	FM	FT	N	G	WF	No switch		With switch		a'	wf	No switch		With switch	
										A	B	A	B			A	B	A	B
ø20	-	6.6	39	48	60	8	25.5	M6x16	4.5	47	34.5	57	44.5	14	4.5	61	34.5	71	44.5
ø25	-	6.6	42	52	64	8	28	M6x16	5	50.5	37.5	60.5	47.5	17.5	5	68	37.5	78	47.5
ø32	34	5.5	48	56	65	8	34	M6x16	7	58	43	68	53	23.5	5	79.5	43	89.5	53
ø40	40	5.5	54	62	72	8	40	M6x16	7	64.5	49.5	74.5	59.5	23.5	5	86	49.5	96	59.5
ø50	50	6.6	67	76	89	9	50	M8x20	8	67.5	50.5	77.5	60.5	28.5	5	93	50.5	103	60.5
ø63	60	9	80	92	108	9	60	M10x25	8	73	56	83	66	28.5	5	98.5	56	108.5	66
ø80	77	11	99	116	134	11	77	M12x40	10	84.5	63.5	94.5	73.5	35.5	8	118	63.5	128	73.5
ø100	94	11	117	136	154	11	94	M12x40	12	96	73	106	83	35.5	8	127.5	73	137.5	83

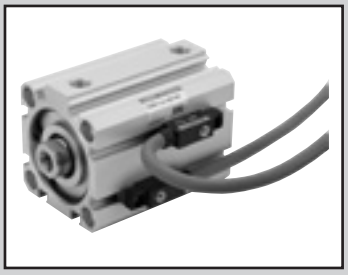

Compact cylinder double acting/single rod/with strong magnetic field proof switch

SSD2-L4 Series

● Bore size: ø40/ø50/ø63/ø80/ø100

JIS symbol 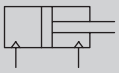

RoHS

Specifications

Item	SSD2-L4				
Bore size mm	ø40	ø50	ø63	ø80	ø100
Actuation	Double acting				
Working fluid	Compressed air				
Max. working pressure MPa	1.0 (≈150 psi, 10 bar)				
Min. working pressure MPa	0.1 (≈15 psi, 1 bar)		0.05 (≈7.3 psi, 0.5 bar)		
Proof pressure MPa	1.6 (≈230 psi, 16 bar)				
Ambient temperature °C	-10 (14°F) to 60 (140°F) (no freezing)				
Port size	Rc1/8	Rc1/4		Rc3/8	
Stroke tolerance mm	$^{+1.0}_{0}$				
Working piston speed mm/s	50 to 500		50 to 300		
Cushion	None				
Lubrication	Not required (use turbine oil class 1 ISO VG32 if necessary for lubrication)				
Allowable absorbed energy J	0.092	0.1	0.12	0.27	0.56

Stroke

Bore size (mm)	Standard stroke (mm)	Max. stroke (mm)	Min. stroke (mm)
ø40	20/25/30/35 40/45/50/75/100	100	20
ø50			
ø63			
ø80			
ø100			

*1: The custom stroke is available in 1 mm increments. However, the total length is the same as that of the next longer standard stroke.

Number of installed switches and min. stroke (mm)

Switch quantity	1	2
Switch model No. / Bore size (mm)	V0	
ø40	20	20
ø50	20	20
ø63	20	20
ø80	20	20
ø100	20	20

Custom stroke

● SSD2-L4 Series

Item	Standard products	
	Standard stroke body with spacer	
Model No.	Refer to How to order.	
Description	A spacer is added to the standard stroke body to adjust the stroke in 1 mm increments.	
Stroke range	Bore size	Stroke range
	40 to 100	1 to 99
Example of model No.	Model No.: SSD2-L4-40-38 A +2 mm spacer is added to the SSD2-L4-40-40 standard cylinder to create 38 mm stroke. B + stroke is 89.5mm.	

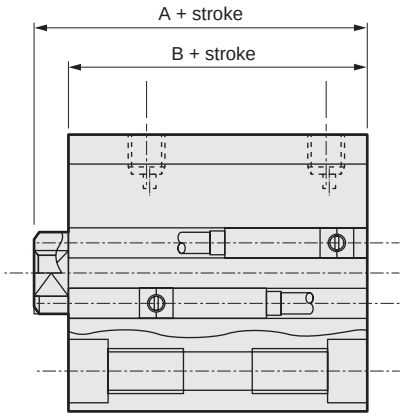

Switch specifications

Item	2-wire reed	
	V0	
Applications	For relay, programmable controller	
Load voltage	12/24 VDC	110 VAC
Load current	5 to 50 mA	7 to 20 mA
Internal voltage drop	3.0 V or less (with 40 mA load current)	
Indicator	LED (Lit when ON)	
Leakage current	0 mA	
Weight g	1 m:63 3 m:170 5 m:277	

Cylinder weight table (the weight of the switches is when there are 2 cylinder switches.)

(Unit: g)

Stroke (mm) / Bore size (mm)	20	25	30	35	40	45	50	75	100
ø40	493	520	546	573	599	626	652	785	917
ø50	757	799	841	883	925	967	1009	1219	1429
ø63	1089	1145	1200	1256	1311	1367	1422	1700	1977
ø80	1822	1909	1996	2083	2170	2257	2344	2779	3214
ø100	2665	2779	2892	3006	3119	3233	3346	3914	4481

Theoretical thrust table

(Unit: N)

Bore size (mm)	Operating direction	Working pressure MPa											
		0.05	0.1	0.15	0.2	0.3	0.4	0.5	0.6	0.7	0.8	0.9	1.0
ø40	Push	-	$1.26x10^2$	$1.88x10^2$	$2.51x10^2$	$3.77x10^2$	$5.03x10^2$	$6.28x10^2$	$7.54x10^2$	$8.80x10^2$	$1.01x10^3$	$1.13x10^3$	$1.26x10^3$
	Pull	-	$1.06x10^2$	$1.58x10^2$	$2.11x10^2$	$3.17x10^2$	$4.22x10^2$	$5.28x10^2$	$6.33x10^2$	$7.39x10^2$	$8.44x10^2$	$9.50x10^2$	$1.06x10^3$
ø50	Push	-	$1.96x10^2$	$2.95x10^2$	$3.93x10^2$	$5.89x10^2$	$7.85x10^2$	$9.82x10^2$	$1.18x10^3$	$1.37x10^3$	$1.57x10^3$	$1.77x10^3$	$1.96x10^3$
	Pull	-	$1.65x10^2$	$2.47x10^2$	$3.30x10^2$	$4.95x10^2$	$6.60x10^2$	$8.25x10^2$	$9.90x10^2$	$1.15x10^3$	$1.32x10^3$	$1.48x10^3$	$1.65x10^3$
ø63	Push	$1.56x10^2$	$3.12x10^2$	$4.68x10^2$	$6.23x10^2$	$9.35x10^2$	$1.25x10^3$	$1.56x10^3$	$1.87x10^3$	$2.18x10^3$	$2.49x10^3$	$2.81x10^3$	$3.12x10^3$
	Pull	$1.40x10^2$	$2.80x10^2$	$4.20x10^2$	$5.61x10^2$	$8.41x10^2$	$1.12x10^3$	$1.40x10^3$	$1.68x10^3$	$1.96x10^3$	$2.24x10^3$	$2.52x10^3$	$2.80x10^3$
ø80	Push	$2.51x10^2$	$5.03x10^2$	$7.54x10^2$	$1.01x10^3$	$1.51x10^3$	$2.01x10^3$	$2.51x10^3$	$3.02x10^3$	$3.52x10^3$	$4.02x10^3$	$4.52x10^3$	$5.03x10^3$
	Pull	$2.27x10^2$	$4.54x10^2$	$6.80x10^2$	$9.07x10^2$	$1.36x10^3$	$1.81x10^3$	$2.27x10^3$	$2.72x10^3$	$3.17x10^3$	$3.63x10^3$	$4.08x10^3$	$4.54x10^3$
ø100	Push	$3.93x10^2$	$7.85x10^2$	$1.18x10^3$	$1.57x10^3$	$2.36x10^3$	$3.14x10^3$	$3.93x10^3$	$4.71x10^3$	$5.50x10^3$	$6.28x10^3$	$7.07x10^3$	$7.85x10^3$
	Pull	$3.57x10^2$	$7.15x10^2$	$1.07x10^3$	$1.43x10^3$	$2.14x10^3$	$2.86x10^3$	$3.57x10^3$	$4.29x10^3$	$5.00x10^3$	$5.72x10^3$	$6.43x10^3$	$7.15x10^3$

How to order

SSD2-L4 - 50 - 40 - V0 - D - N - LB - I

Model No.

Ⓐ Bore size

Ⓑ Stroke

Ⓒ Switch model No.

Ⓓ Switch quantity

Ⓔ Option

Ⓕ Mounting bracket *1 *2

Ⓖ Accessory *3

Code	Description
Ⓐ Bore size (mm)	
40	ø40
50	ø50
63	ø63
80	ø80
100	ø100

Ⓑ Stroke (mm)

Bore size	Stroke *1	Custom stroke *2
ø40 to ø100	20 to 100	In 1 mm increments

*1 : Refer to page 1012 for the number of installed switches and the min. stroke.
*2 : The total length when using a custom stroke is the same as that when using the next longer standard stroke.

Ⓒ Switch model No.

Lead wire Straight	Contact	Voltage AC	Voltage DC	Indicator	Lead wire
V0*	Reed	●	●	1-color LED	2-wire

* Lead wire length	
Blank	1 m (standard)
3	3 m (option)
5	5 m (option)

Ⓓ Switch quantity	
R	1 on rod side
H	1 on head side
D	2
T	3

Ⓔ Option	
Blank	Rod end female thread
N	Rod end male thread

Ⓕ Mounting bracket	
Blank	Without mounting bracket
LB	Axial foot
CB	Clevis bracket (pin and snap ring included)
FA	Rod side flange
FB	Head side flange

Ⓖ Accessory (available when rod end male thread "N" is selected)	
I	Rod eye
Y	Rod clevis (pin and snap ring included)

⚠ Precautions for model No. selection

*1 : The mounting bracket is included at shipment.
*2 : The projection dimension of piston rod WF when LB or FA is selected is different from that of the standard. Refer to the dimensions on page 1017. The number of the specified protruding dimension will be added at the end of the model No. printed on the metal plate on the body.
*3 : "I" and "Y" cannot be selected together.

[Example of model No.]

SSD2-L4-50-40-V0-D-N-LB-I

Model: Compact cylinder
Double acting/single rod/with strong magnetic field proof switch

Ⓐ Bore size : ø50 mm
Ⓑ Stroke : 40 mm
Ⓒ Switch model No.: Reed V0 switch, Lead wire length 1 m
Ⓓ Switch quantity : 2 pcs. included
Ⓔ Option : Rod end male thread
Ⓕ Mounting bracket: Axial foot
Ⓖ Accessory : Rod eye

How to order switch

SW - V0

Switch model No.
(Item Ⓒ above)

How to order mounting bracket

Bore size (mm) / Mounting bracket	ø40	ø50	ø63	ø80	ø100
Foot (LB)	SSD2-LB-40	SSD2-LB-50	SSD2-LB-63	SSD2-LB-80	SSD2-LB-100
Flange (FA/FB)	SSD2-FA-40	SSD2-FA-50	SSD2-FA-63	SSD2-FA-80	SSD2-FA-100
Clevis bracket (CB)	SSD2-CB-40	SSD2-CB-50	SSD2-CB-63	SSD2-CB-80	SSD2-CB-100

*1: The foot mounting bracket is provided as 2 pcs./set.

Internal structure and parts list

● SSD2-L4-40, 50

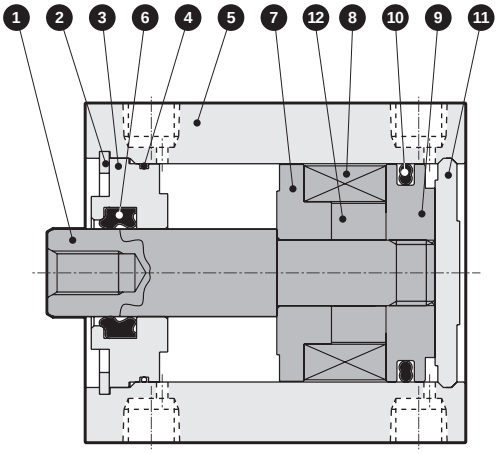

● SSD2-L4-63 to 100

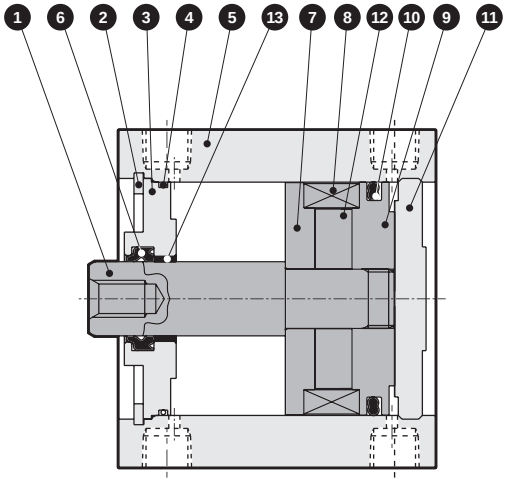

No.	Part name	Material	Remarks	No.	Part name	Material	Remarks
1	Piston rod	Steel	Industrial chrome plating	7	Spacer	Aluminum alloy	Chromate
2	C-snap ring	Stainless steel		8	Magnet	Plastic	
3	Rod metal	ø40, ø50: Special aluminum ø63 to ø100: Aluminum alloy	ø40, ø50: Alumite ø63 to ø100: Chromate	9	Piston	Aluminum alloy	Chromate
				10	Piston packing	Nitrile rubber	
4	Rod metal gasket	Nitrile rubber		11	Cover	Aluminum alloy	Alumite
5	Body	Aluminum alloy	Hard alumite	12	Collar	Aluminum alloy	
6	Rod packing	Nitrile rubber		13	Bush	Oiles drymet	ø63 to ø100 only

Repair parts list

Bore size (mm)	Kit No.	Repair parts No.
ø40	SSD2-40K	4 6 10
ø50	SSD2-50K	
ø63	SSD2-63K	
ø80	SSD2-80K	
ø100	SSD2-100K	

Dimensions

● SSD2-L4-40 to 100

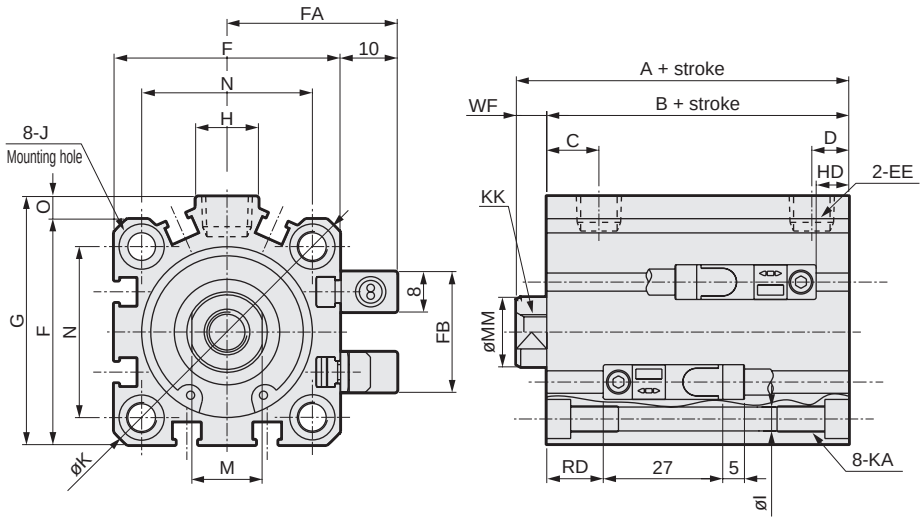

● Rod end male thread

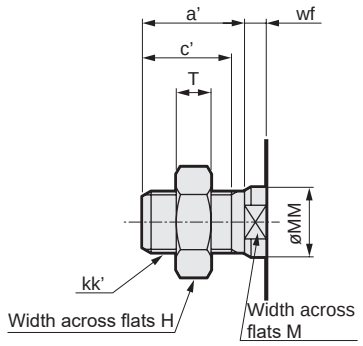

Code / Bore size (mm)	A	B	C	D	EE	F	FA	FB	G	H	I	J
ø40	56.5	49.5	12	8.5	Rc1/8	52	36	31	57	15	5.5	Spot face ø9 depth 5.5
ø50	58.5	50.5	10.5	10.5	Rc1/4	64	42	32	71	18	6.9	Spot face ø11 depth 6.5
ø63	64	56	13	11	Rc1/4	77	48.5	32	84	23	8.7	Spot face ø14 depth 9
ø80	73.5	63.5	16	13	Rc3/8	98	59	32	104	31	10.5	Spot face ø17.5 depth 11
ø100	85	73	23	15	Rc3/8	117	68.5	32	123.5	38	10.5	Spot face ø17.5 depth 11

Code / Bore size (mm)	K	KA	KK	M	MM	N	O	WF	HD	RD
ø40	69	M6 depth 11	M8 depth 13	14	16	40	5	7	7.5	13
ø50	86	M8 depth 13	M10 depth 15	17	20	50	7	8	8.5	13
ø63	103	M10 depth 25	M10 depth 15	17	20	60	7	8	13.5	13.5
ø80	132	M12 depth 28	M16 depth 21	22	25	77	6	10	18.5	16
ø100	156	M12 depth 28	M20 depth 27	27	30	94	6.5	12	24	20

*1 : To calculate A+ stroke or B+ stroke when using custom stroke, apply the next longer standard stroke (instead of the custom stroke) to the stroke value.
(Example) If the custom stroke is 23 mm, apply the standard stroke 25 mm.

*2 : For dimensions of individual accessories, refer to pages 1046 to 1049.

● Rod end male thread

Code / Bore size (mm)	a'	c'	H	kk'	M	MM	T	wf
ø40	23.5	20.5	22	M14x1.5	14	16	8	5
ø50	28.5	26	27	M18x1.5	17	20	11	5
ø63	28.5	26	27	M18x1.5	17	20	11	5
ø80	35.5	32.5	32	M22x1.5	22	25	13	8
ø100	35.5	32.5	41	M26x1.5	27	30	16	8

Dimensions with mounting bracket

● Axial foot (LB)
SSD2-L4-40 to 100 -LB

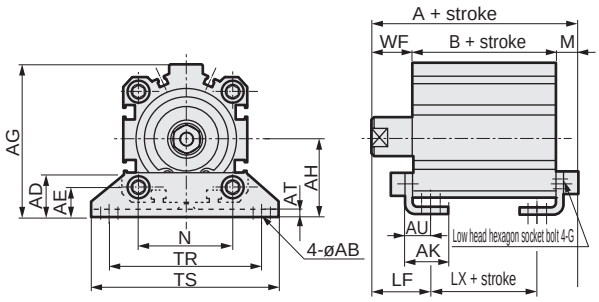

Rod end male thread

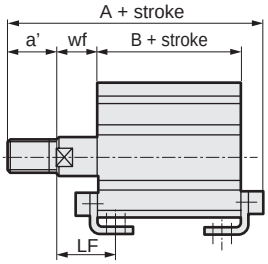

● Clevis bracket (CB)
SSD2-L4-40 to 100 -CB

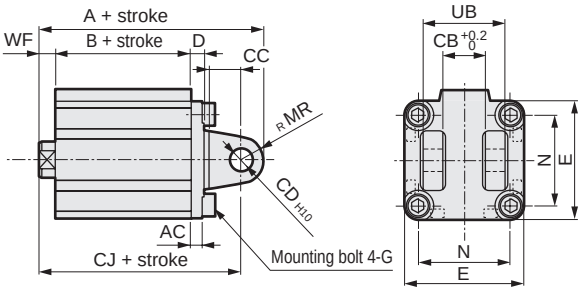

Rod end male thread

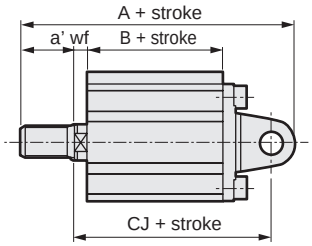

Code	Common dimensions													
Bore size (mm)	AB	AD	AE	AG	AH	AK	AT	AU	G	N	TR	TS	M	LF
ø40	7	18	13	64	33	18.2	3.2	11.2	M6x16	40	64	78	7.2	25
ø50	9	22	14	78	39	22.7	3.2	14.7	M8x20	50	79	95	8.2	29.5
ø63	11	26	16	91.5	46	25.2	3.2	16.2	M10x25	60	95	113	9.2	31
ø80	13	31.5	20.5	114	59	30.5	4.5	19.5	M12x40	77	118	140	11.5	35
ø100	13	35	24	136	71	35.5	6	23	M12x40	94	137	162	13	39

Code	Female thread				Male thread				
Bore size (mm)	WF	A	B	CJ	a'	wf	A	B	CJ
ø40	17	73.7	49.5	33.5	23.5	15	95.2	49.5	33.5
ø50	18	76.7	50.5	27.5	28.5	15	102.7	50.5	27.5
ø63	18	83.2	56	30	28.5	15	108.7	56	30
ø80	20	95	63.5	33.5	35.5	18	128.5	63.5	33.5
ø100	22	108	73	39	35.5	18	139.5	73	39

Code	Common dimensions									
Bore size (mm)	AC	CB	CC	CD	D	E	G	MR	N	UB
ø40	5	18.2	14	10	6	52	M6x16	10	40	36
ø50	6	22.2	20	14	7	64	M8x20	14	50	44
ø63	7	22.2	20	14	8	77	M10x25	14	60	44
ø80	9	28.2	27	18	10	98	M12x40	18	77	56
ø100	12	32.2	31	22	13	117	M12x40	22	94	64

Code	Female thread				Male thread				
Bore size (mm)	WF	A	B	CJ	a'	wf	A	B	CJ
ø40	7	88.5	49.5	78.5	23.5	5	110	49.5	76.5
ø50	8	100.5	50.5	86.5	28.5	5	126	50.5	83.5
ø63	8	108	56	94	28.5	5	133.5	56	91
ø80	10	129.5	63.5	111.5	35.5	8	163	63.5	109.5
ø100	12	152	73	130	35.5	8	183.5	73	126

● Rod side flange (FA)
SSD2-L4-40 to 100 -FA

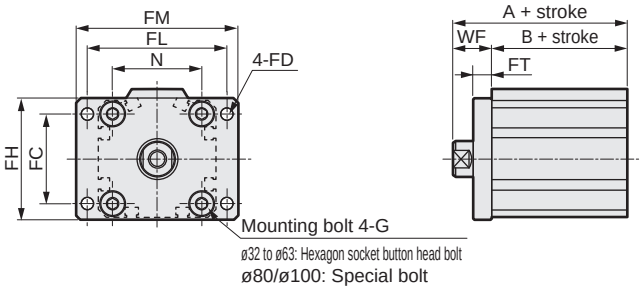

Rod end male thread

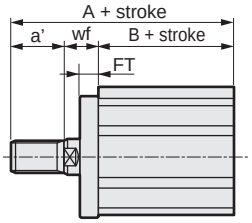

● Head side flange (FB)
SSD2-L4-40 to 100 -FB

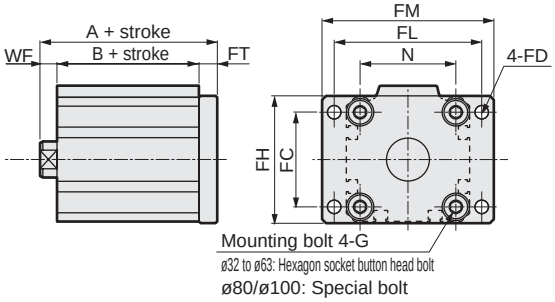

Rod end male thread

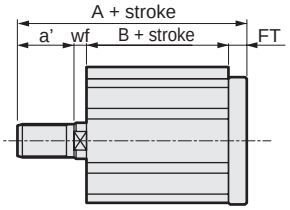

Code	Common dimensions								Female thread			Male thread			
Bore size (mm)	FC	FD	FH	FL	FM	FT	N	G	WF	A	B	a'	wf	A	B
ø40	40	5.5	54	62	72	8	40	M6x16	17	66.5	49.5	23.5	15	88	49.5
ø50	50	6.6	67	76	89	9	50	M8x20	18	68.5	50.5	28.5	15	94	50.5
ø63	60	9	80	92	108	9	60	M10x25	18	74	56	28.5	15	99.5	56
ø80	77	11	99	116	134	11	77	M12x40	20	83.5	63.5	35.5	18	117	63.5
ø100	94	11	117	136	154	11	94	M12x40	22	95	73	35.5	18	126.5	73

Code	Common dimensions								Female thread			Male thread			
Bore size (mm)	FC	FD	FH	FL	FM	FT	N	G	WF	A	B	a'	wf	A	B
ø40	40	5.5	54	62	72	8	40	M6x16	7	64.5	49.5	23.5	5	86	49.5
ø50	50	6.6	67	76	89	9	50	M8x20	8	67.5	50.5	28.5	5	93	50.5
ø63	60	9	80	92	108	9	60	M10x25	8	73	56	28.5	5	98.5	56
ø80	77	11	99	116	134	11	77	M12x40	10	84.5	63.5	35.5	8	118	63.5
ø100	94	11	117	136	154	11	94	M12x40	12	96	73	35.5	8	127.5	73

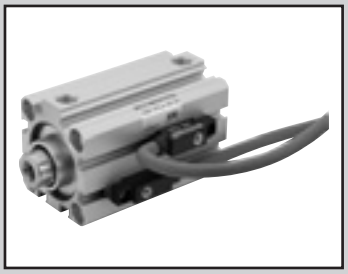

Compact cylinder double acting/single rod
with strong magnetic field proof switch/coil scraper

SSD2-G1L4 Series

● Bore size: ø40/ø50/ø63/ø80/ø100

JIS symbol

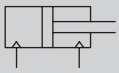

RoHS

Specifications

Item	SSD2-G1L4				
Bore size mm	ø40	ø50	ø63	ø80	ø100
Actuation	Double acting				
Working fluid	Compressed air				
Max. working pressure MPa	1.0 (≈150 psi, 10 bar)				
Min. working pressure MPa	0.15 (≈22 psi, 1.5 bar)		0.1 (≈15 psi, 1 bar)		
Proof pressure MPa	1.6 (≈230 psi, 16 bar)				
Ambient temperature °C	-10 (14°F) to 60 (140°F) (no freezing)				
Port size	Rc1/8	Rc1/4		Rc3/8	
Stroke tolerance mm	$^{+1.0}_{0}$				
Working piston speed mm/s	50 to 500		50 to 300		
Cushion	None				
Lubrication	Not required (use turbine oil class 1 ISO VG32 if necessary for lubrication)				
Allowable absorbed energy J	0.092	0.1	0.12	0.27	0.56

Stroke

Bore size (mm)	Standard stroke (mm)	Max. stroke (mm)	Min. stroke (mm)
ø40	20/25/30/35/40/45/50/75/100	100	20
ø50			
ø63			
ø80			
ø100			

*1: The custom stroke is available in 1 mm increments. However, the total length is the same as that of the next longer standard stroke.

Number of installed switches and min. stroke (mm)

Switch quantity	1	2	3
Switch model No. / Bore size (mm)	V0		
ø40	20	20	35
ø50	20	20	35
ø63	20	20	35
ø80	20	20	35
ø100	20	20	35

Custom stroke

● SSD2-G1L4 Series

Item	Standard products	
	Standard stroke body with spacer	
Model No.	Refer to How to order.	
Description	A spacer is added to the standard stroke body to adjust the stroke in 1 mm increments.	
Stroke range	Bore size	Stroke range
	40 to 100	1 to 99
Example of model No.	Model No.: SSD2-G1L4-40-38 A +2 mm spacer is added to the SSD2-G1L4-40-40 standard cylinder to create 38 mm stroke. B + stroke is 89.5mm.	

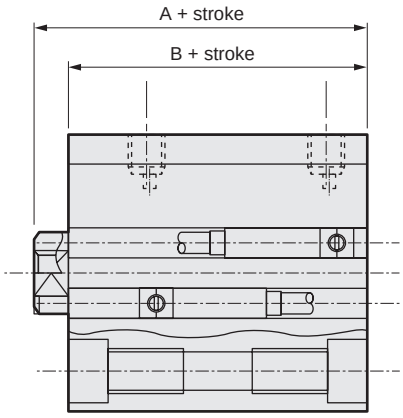

Switch specifications

Item	2-wire reed	
	V0	
Applications	For relay, programmable controller	
Load voltage	12/24 VDC	110 VAC
Load current	5 to 50 mA	7 to 20 mA
Internal voltage drop	3.0 V or less (with 40 mA load current)	
Indicator	LED (Lit when ON)	
Leakage current	0 mA	
Weight g	1 m:63 3 m:170 5 m:277	

Cylinder weight table

(the weight of the switches is when there are 2 cylinder switches.)

(Unit: g)

Stroke (mm) / Bore size (mm)	20	25	30	35	40	45	50	75	100
ø40	575	602	628	655	681	708	734	867	999
ø50	876	918	960	1002	1044	1086	1128	1338	1548
ø63	1240	1296	1351	1407	1462	1518	1573	1851	2128
ø80	2074	2161	2248	2335	2422	2509	2596	3031	3466
ø100	3000	3114	3227	3341	3454	3568	3681	4249	4816

Theoretical thrust table

(Unit: N)

Bore size (mm)	Operating direction	Working pressure MPa										
		0.1	0.15	0.2	0.3	0.4	0.5	0.6	0.7	0.8	0.9	1.0
ø40	Push	-	$1.88x10^2$	$2.51x10^2$	$3.77x10^2$	$5.03x10^2$	$6.28x10^2$	$7.54x10^2$	$8.80x10^2$	$1.01x10^3$	$1.13x10^3$	$1.26x10^3$
	Pull	-	$1.58x10^2$	$2.11x10^2$	$3.17x10^2$	$4.22x10^2$	$5.28x10^2$	$6.33x10^2$	$7.39x10^2$	$8.44x10^2$	$9.50x10^2$	$1.06x10^3$
ø50	Push	-	$2.95x10^2$	$3.93x10^2$	$5.89x10^2$	$7.85x10^2$	$9.82x10^2$	$1.18x10^3$	$1.37x10^3$	$1.57x10^3$	$1.77x10^3$	$1.96x10^3$
	Pull	-	$2.47x10^2$	$3.30x10^2$	$4.95x10^2$	$6.60x10^2$	$8.25x10^2$	$9.90x10^2$	$1.15x10^3$	$1.32x10^3$	$1.48x10^3$	$1.65x10^3$
ø63	Push	$3.12x10^2$	$4.68x10^2$	$6.23x10^2$	$9.35x10^2$	$1.25x10^3$	$1.56x10^3$	$1.87x10^3$	$2.18x10^3$	$2.49x10^3$	$2.81x10^3$	$3.12x10^3$
	Pull	$2.80x10^2$	$4.20x10^2$	$5.61x10^2$	$8.41x10^2$	$1.12x10^3$	$1.40x10^3$	$1.68x10^3$	$1.96x10^3$	$2.24x10^3$	$2.52x10^3$	$2.80x10^3$
ø80	Push	$5.03x10^2$	$7.54x10^2$	$1.01x10^3$	$1.51x10^3$	$2.01x10^3$	$2.51x10^3$	$3.02x10^3$	$3.52x10^3$	$4.02x10^3$	$4.52x10^3$	$5.03x10^3$
	Pull	$4.54x10^2$	$6.80x10^2$	$9.07x10^2$	$1.36x10^3$	$1.81x10^3$	$2.27x10^3$	$2.72x10^3$	$3.17x10^3$	$3.63x10^3$	$4.08x10^3$	$4.54x10^3$
ø100	Push	$7.85x10^2$	$1.18x10^3$	$1.57x10^3$	$2.36x10^3$	$3.14x10^3$	$3.93x10^3$	$4.71x10^3$	$5.50x10^3$	$6.28x10^3$	$7.07x10^3$	$7.85x10^3$
	Pull	$7.15x10^2$	$1.07x10^3$	$1.43x10^3$	$2.14x10^3$	$2.86x10^3$	$3.57x10^3$	$4.29x10^3$	$5.00x10^3$	$5.72x10^3$	$6.43x10^3$	$7.15x10^3$

How to order

SSD2-G1L4 - 50 - 40 - V0 - D - N - LB - I

Model No.

Ⓐ Bore size

Ⓑ Stroke

Ⓒ Switch model No.

Ⓓ Switch quantity

Ⓔ Option

Ⓕ Mounting bracket *1

Ⓖ Accessory *2

Code	Description
Ⓐ Bore size (mm)	
40	ø40
50	ø50
63	ø63
80	ø80
100	ø100

Ⓑ Stroke (mm)

Bore size	Stroke *1	Custom stroke *2
ø40 to ø100	20 to 100	In 1 mm increments

*1 : Refer to page 1018 for the number of installed switches and the min. stroke.
*2 : The total length is the same as that of the next longer standard stroke.

Ⓒ Switch model No.

Lead wire Straight	Contact	Voltage AC	Voltage DC	Indicator	Lead wire
V0*	Reed	●	●	1-color LED	2-wire

*** Lead wire length**

Blank	1 m (standard)
3	3 m (option)
5	5 m (option)

Ⓓ Switch quantity

R	1 on rod side
H	1 on head side
D	2
T	3

Ⓔ Option

Blank	Rod end female thread
N	Rod end male thread

Ⓕ Mounting bracket

Blank	Without mounting bracket
LB	Axial foot (made-to-order product)
CB	Clevis bracket (pin and snap ring included)
FA	Rod side flange (made-to-order product)
FB	Head side flange

Ⓖ Accessory (available when rod end male thread "N" is selected)

I	Rod eye
Y	Rod clevis (pin and snap ring included)

⚠ Precautions for model No. selection

*1 : The mounting bracket is included at shipment.
*2 : "I" and "Y" cannot be selected together.

[Example of model No.]

SSD2-G1L4-50-40-V0-D-N-LB-I

Model: Compact cylinder
Double acting/with coil scraper/with strong magnetic field proof switch

Ⓐ Bore size : ø50 mm
Ⓑ Stroke : 40 mm
Ⓒ Switch model No. : Reed V0 switch, Lead wire length 1 m
Ⓓ Switch quantity : 2 pcs. included
Ⓔ Option : Rod end male thread
Ⓕ Mounting bracket : Axial foot
Ⓖ Accessory : Rod eye

How to order switch

SW - V0

Switch model No.
(Item Ⓒ above)

How to order mounting bracket

Bore size (mm) / Mounting bracket	ø40	ø50	ø63	ø80	ø100
Flange (FB)	SSD2-FA-40	SSD2-FA-50	SSD2-FA-63	SSD2-FA-80	SSD2-FA-100
Clevis bracket (CB)	SSD2-CB-40	SSD2-CB-50	SSD2-CB-63	SSD2-CB-80	SSD2-CB-100

*1: The foot mounting bracket is provided as 2 pcs./set.

Internal structure and parts list

● SSD2-G1L4-40, 50

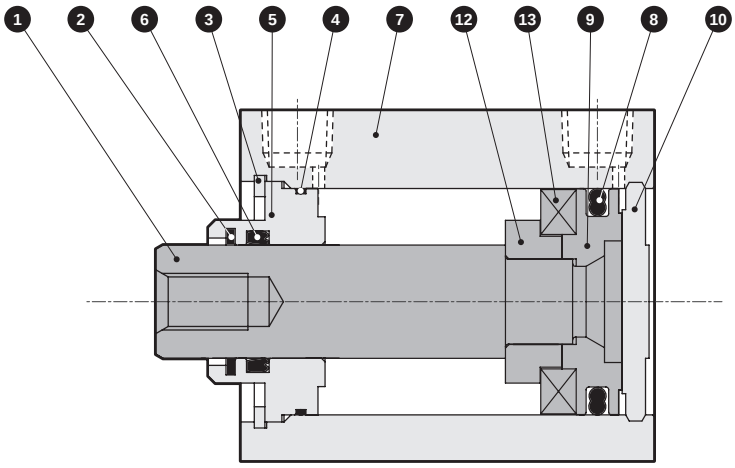

● SSD2-G1L4-63 to 100

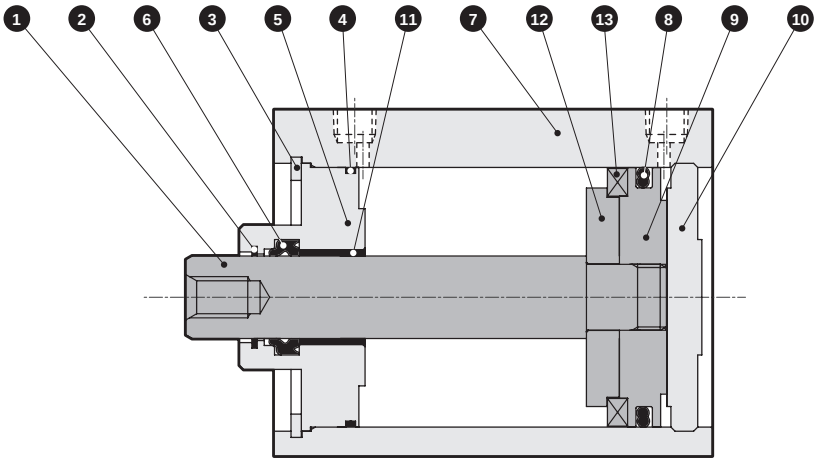

No.	Part name	Material	Remarks	No.	Part name	Material	Remarks
1	Piston rod	Steel	Industrial chrome plating	8	Piston packing	Nitrile rubber	
2	Coil scraper	Phosphor bronze		9	Piston	Aluminum alloy	Chromate
3	C-snap ring for hole	Steel	Zinc phosphate	10	Cover	Aluminum alloy	Chromate
4	Rod metal gasket	Nitrile rubber		11	Bush	Oiles drymet	ø63 to ø100
5	Rod metal	Aluminum alloy	Chromate	12	Spacer	Aluminum alloy	
6	Rod packing	Nitrile rubber		13	Magnet	Plastic	
7	Body	Aluminum alloy	Hard alumite				

Repair parts list

Part name / Bore size (mm)	Kit No.	Repair parts No.
ø40	SSD2-G1-40K	❷❹❻❽
ø50	SSD2-G1-50K	
ø63	SSD2-G1-63K	
ø80	SSD2-G1-80K	
ø100	SSD2-G1-100K	

Dimensions

● SSD2-G1L4-40 to 100

● Rod end male thread

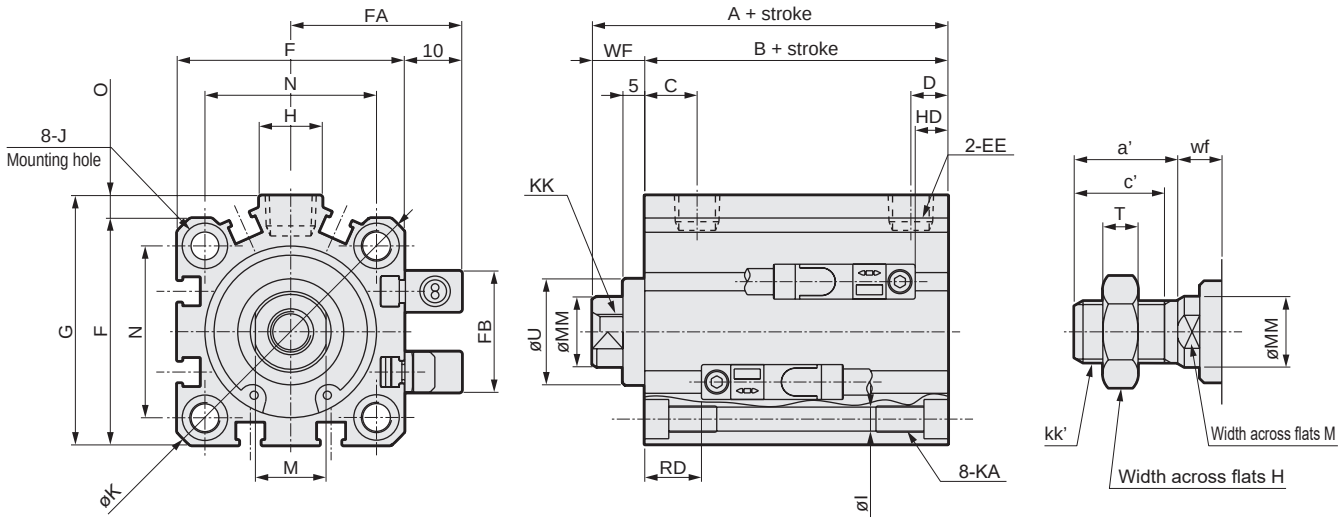

Code / Bore size (mm)	A	B	C	D	EE	F	FA	FB	G	H	I	J
ø40	61.5	49.5	12	8.5	Rc1/8	52	36	31	57	15	5.5	9 spot face depth 5.5
ø50	63.5	50.5	10.5	10.5	Rc1/4	64	42	32	71	18	6.9	11 spot face depth 6.5
ø63	69	56	13	11	Rc1/4	77	48.5	32	84	23	8.7	14 spot face depth 9
ø80	78.5	63.5	16	13	Rc3/8	98	59	32	104	31	10.5	17.5 spot face depth 11
ø100	90	73	23	15	Rc3/8	117	68.5	32	123.5	38	10.5	17.5 spot face depth 11

Code / Bore size (mm)	K	KA	KK	M	MM	N	O	U	WF	HD	RD
ø40	69	M6 depth 11	M8 depth 13	14	16	40	5	28 h9	12	7.5	13
ø50	86	M8 depth 13	M10 depth 15	17	20	50	7	35 h9	13	8.5	13
ø63	103	M10 depth 25	M10 depth 15	17	20	60	7	35 h9	13	13.5	13.5
ø80	132	M12 depth 28	M16 depth 21	22	25	77	6	43 h9	15	18.5	16
ø100	156	M12 depth 28	M20 depth 27	27	30	94	6.5	59 h9	17	24	20

*1 : The A + stroke and B + stroke when using a custom stroke are the same as those when using the next longer standard stroke.
*2 : For dimensions of individual accessories, refer to pages 1046 to 1049.

● Rod end male thread

Code / Bore size (mm)	a'	c'	H	kk'	M	MM	T	wf
ø40	23.5	20.5	22	M14x1.5	14	16	8	10
ø50	28.5	26	27	M18x1.5	17	20	11	10
ø63	28.5	26	27	M18x1.5	17	20	11	10
ø80	35.5	32.5	32	M22x1.5	22	25	13	13
ø100	35.5	32.5	41	M26x1.5	27	30	16	13

Dimensions with mounting bracket

● Clevis bracket (CB)
SSD2-G1L4-40 to 100 -CB

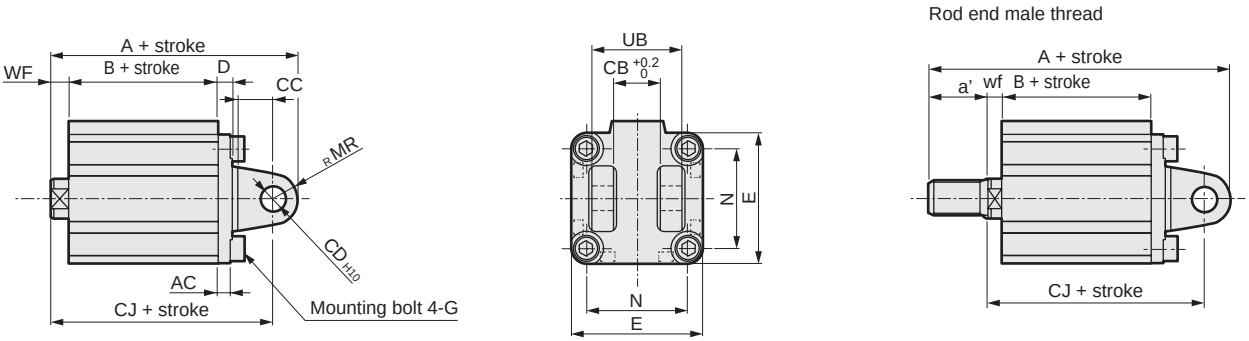

Code	Common dimensions										Female thread				Male thread				
Bore size (mm)	AC	CB	CC	CD	D	E	G	MR	N	UB	WF	A	B	CJ	a'	wf	A	B	CJ
ø40	5	18.2	14	10	6	52	M6x16	10	40	36	7	93.5	49.5	83.5	23.5	5	115	49.5	81.5
ø50	6	22.2	20	14	7	64	M8x20	14	50	44	8	105.5	50.5	91.5	28.5	5	131	50.5	88.5
ø63	7	22.2	20	14	8	77	M10x25	14	60	44	8	113	56	99	28.5	5	138.5	56	96
ø80	9	28.2	27	18	10	98	M12x40	18	77	56	10	134.5	63.5	116.5	35.5	8	168	63.5	114.5
ø100	12	32.2	31	22	13	117	M12x40	22	94	64	12	157	73	135	35.5	8	188.5	73	131

● Head side flange (FB)
SSD2-G1L4-40 to 100 -FB

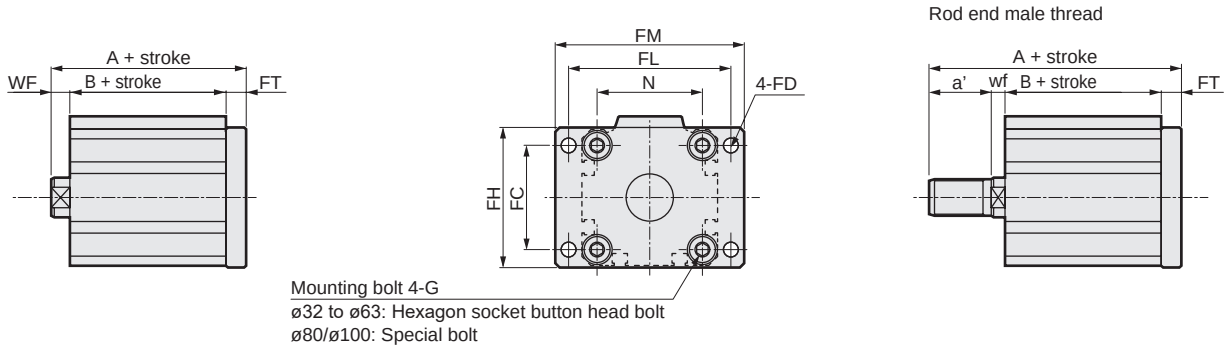

Code	Common dimensions								Female thread			Male thread			
Bore size (mm)	FC	FD	FH	FL	FM	FT	N	G	WF	A	B	a'	wf	A	B
ø40	40	5.5	54	62	72	8	40	M6x16	7	69.5	49.5	23.5	5	91	49.5
ø50	50	6.6	67	76	89	9	50	M8x20	8	72.5	50.5	28.5	5	98	50.5
ø63	60	9	80	92	108	9	60	M10x25	8	78	56	28.5	5	103.5	56
ø80	77	11	99	116	134	11	77	M12x40	10	89.5	63.5	35.5	8	123	63.5
ø100	94	11	117	136	154	11	94	M12x40	12	101	73	35.5	8	132.5	73

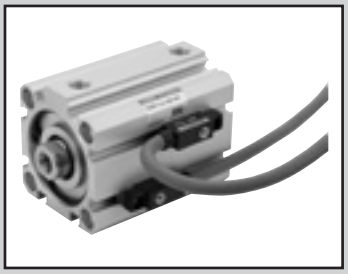

Compact cylinder double acting/high load/
with strong magnetic field proof switch

SSD2-KL4 Series

● Bore size: ø40/ø50/ø63/ø80/ø100

JIS symbol

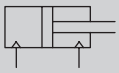

RoHS

Specifications

Item	SSD2-KL4				
Bore size mm	ø40	ø50	ø63	ø80	ø100
Actuation	Double acting				
Working fluid	Compressed air				
Max. working pressure MPa	1.0 (≈150 psi, 10 bar)				
Min. working pressure MPa	0.1 (≈15 psi, 1 bar)		0.05 (≈7.3 psi, 0.5 bar)		
Proof pressure MPa	1.6 (≈230 psi, 16 bar)				
Ambient temperature °C	-10 (14°F) to 60 (140°F) (no freezing)				
Port size	Rc1/8	Rc1/4		Rc3/8	
Stroke tolerance mm	$^{+2.0}_{0}$				
Working piston speed mm/s	50 to 500		50 to 300		
Cushion	Rubber cushion				
Lubrication	Not required (use turbine oil class 1 ISO VG32 if necessary for lubrication)				
Allowable absorbed energy J	0.63	0.98	1.56	2.51	3.92

Stroke

Bore size (mm)	Standard stroke (mm)	Max. stroke (mm)	Min. stroke (mm)
ø40	20/25/30/35/40 45/50/75/100	100	20
ø50			
ø63			
ø80			
ø100			

*1:The custom stroke is available in 1 mm increments. However, the total length is the same as that of the next longer standard stroke.

Number of installed switches and min. stroke (mm)

Switch quantity	1	2	3
Switch model No. / Bore size (mm)	V0		
ø40	20	20	35
ø50	20	20	35
ø63	20	20	35
ø80	20	20	35
ø100	20	20	35

Custom stroke

● SSD2-KL4 Series

Item	Standard products	
	Standard stroke body with spacer	
Model No.	Refer to How to order.	
Description	A spacer is added to the standard stroke body to adjust the stroke in 1 mm increments.	
Stroke range	Bore size	Stroke range
	40 to 100	1 to 99
Example of model No.	Model No.: SSD2-KL4-40-38 A +2 mm spacer is added to the SSD2-KL4-40-40 standard cylinder to create 38 mm stroke. B + stroke is 99.5mm.	

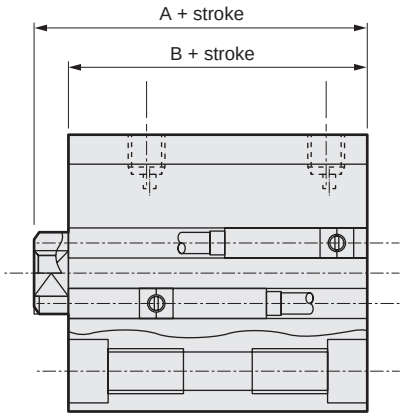

Switch specifications

Item	2-wire reed	
	V0	
Applications	For relay, programmable controller	
Load voltage	12/24 VDC	110 VAC
Load current	5 to 50 mA	7 to 20 mA
Internal voltage drop	3.0 V or less (with 40 mA load current)	
Indicator	LED (Lit when ON)	
Leakage current	0 mA	
Weight g	1 m:63 3 m:170 5 m:277	

Cylinder weight table

(the weight of the switches is when there are 2 cylinder switches.)

(Unit: g)

Stroke (mm) / Bore size (mm)	20	25	30	35	40	45	50	75	100
ø40	546	573	599	626	652	679	705	838	970
ø50	841	883	925	967	1009	1051	1093	1303	1513
ø63	1199	1254	1309	1364	1419	1474	1529	1804	2079
ø80	1995	2082	2169	2256	2343	2430	2517	2952	3387
ø100	2893	3007	3120	3234	3347	3461	3574	4142	4709

Theoretical thrust table

(Unit: N)

Bore size (mm)	Operating direction	Working pressure MPa											
		0.05	0.1	0.15	0.2	0.3	0.4	0.5	0.6	0.7	0.8	0.9	1.0
ø40	Push	-	$1.26x10^2$	$1.88x10^2$	$2.51x10^2$	$3.77x10^2$	$5.03x10^2$	$6.28x10^2$	$7.54x10^2$	$8.80x10^2$	$1.01x10^3$	$1.13x10^3$	$1.26x10^3$
	Pull	-	$1.06x10^2$	$1.58x10^2$	$2.11x10^2$	$3.17x10^2$	$4.22x10^2$	$5.28x10^2$	$6.33x10^2$	$7.39x10^2$	$8.44x10^2$	$9.50x10^2$	$1.06x10^3$
ø50	Push	-	$1.96x10^2$	$2.95x10^2$	$3.93x10^2$	$5.89x10^2$	$7.85x10^2$	$9.82x10^2$	$1.18x10^3$	$1.37x10^3$	$1.57x10^3$	$1.77x10^3$	$1.96x10^3$
	Pull	-	$1.65x10^2$	$2.47x10^2$	$3.30x10^2$	$4.95x10^2$	$6.60x10^2$	$8.25x10^2$	$9.90x10^2$	$1.15x10^3$	$1.32x10^3$	$1.48x10^3$	$1.65x10^3$
ø63	Push	$1.56x10^2$	$3.12x10^2$	$4.68x10^2$	$6.23x10^2$	$9.35x10^2$	$1.25x10^3$	$1.56x10^3$	$1.87x10^3$	$2.18x10^3$	$2.49x10^3$	$2.81x10^3$	$3.12x10^3$
	Pull	$1.40x10^2$	$2.80x10^2$	$4.20x10^2$	$5.61x10^2$	$8.41x10^2$	$1.12x10^3$	$1.40x10^3$	$1.68x10^3$	$1.96x10^3$	$2.24x10^3$	$2.52x10^3$	$2.80x10^3$
ø80	Push	$2.51x10^2$	$5.03x10^2$	$7.54x10^2$	$1.01x10^3$	$1.51x10^3$	$2.01x10^3$	$2.51x10^3$	$3.02x10^3$	$3.52x10^3$	$4.02x10^3$	$4.52x10^3$	$5.03x10^3$
	Pull	$2.27x10^2$	$4.54x10^2$	$6.80x10^2$	$9.07x10^2$	$1.36x10^3$	$1.81x10^3$	$2.27x10^3$	$2.72x10^3$	$3.17x10^3$	$3.63x10^3$	$4.08x10^3$	$4.54x10^3$
ø100	Push	$3.93x10^2$	$7.85x10^2$	$1.18x10^3$	$1.57x10^3$	$2.36x10^3$	$3.14x10^3$	$3.93x10^3$	$4.71x10^3$	$5.50x10^3$	$6.28x10^3$	$7.07x10^3$	$7.85x10^3$
	Pull	$3.57x10^2$	$7.15x10^2$	$1.07x10^3$	$1.43x10^3$	$2.14x10^3$	$2.86x10^3$	$3.57x10^3$	$4.29x10^3$	$5.00x10^3$	$5.72x10^3$	$6.43x10^3$	$7.15x10^3$

How to order

SSD2-KL4 - 50 - 40 - V0 - D - N - LB - I

- SSD2-KL4: Model No.
- 50: Ⓐ Bore size
- 40: Ⓑ Stroke
- V0: Ⓒ Switch model No.
- D: Ⓓ Switch quantity
- N: Ⓔ Option
- LB: Ⓕ Mounting bracket *1 *2
- I: Ⓖ Accessory *3

Code	Description
Ⓐ Bore size (mm)	
40	ø40
50	ø50
63	ø63
80	ø80
100	ø100

Ⓑ Stroke (mm)

Bore size	Stroke *1	Custom stroke *2
ø40 to ø100	20 to 100	In 1 mm increments

*1 : Refer to page 1024 for the number of installed switches and the min. stroke.
*2 : The total length is the same as that of the next longer standard stroke.

Ⓒ Switch model No.

Lead wire Straight	Contact	Voltage AC	Voltage DC	Indicator	Lead wire
V0*	Reed	●	●	1-color LED	2-wire

* Lead wire length	
Blank	1 m (standard)
3	3 m (option)
5	5 m (option)

Ⓓ Switch quantity	
R	1 on rod side
H	1 on head side
D	2
T	3

Ⓔ Option	
Blank	Rod end female thread
N	Rod end male thread

Ⓕ Mounting bracket	
Blank	Without mounting bracket
LB	Axial foot
CB	Clevis bracket (pin and snap ring included)
FA	Rod side flange
FB	Head side flange

Ⓖ Accessory (available when rod end male thread "N" is selected)	
I	Rod eye
Y	Rod clevis (pin and snap ring included)

⚠ Precautions for model No. selection

*1 : The mounting bracket is included at shipment.
*2 : The projection dimension of piston rod WF when LB or FA is selected is different from that of the standard. Refer to the dimensions on page 1029. The number of the specified protruding dimension will be added at the end of the model No. printed on the metal plate on the body.
*3 : "I" and "Y" cannot be selected together.

[Example of model No.]

SSD2-KL4-50-40-V0-D-N-LB-I

Model: Compact cylinder
Double acting/single high load/
with strong magnetic field proof switch

- Ⓐ Bore size : ø50 mm
- Ⓑ Stroke : 40 mm
- Ⓒ Switch model No. : Reed V0 switch, Lead wire length 1 m
- Ⓓ Switch quantity : 2 pcs. included
- Ⓔ Option : Rod end male thread
- Ⓕ Mounting bracket : Axial foot
- Ⓖ Accessory : Rod eye

How to order switch

SW - V0

Switch model No.
(Item Ⓒ above)

How to order mounting bracket

Bore size (mm) / Mounting bracket	ø40	ø50	ø63	ø80	ø100
Foot (LB)	SSD2-LB-40	SSD2-LB-50	SSD2-LB-63	SSD2-LB-80	SSD2-LB-100
Flange (FA/FB)	SSD2-FA-40	SSD2-FA-50	SSD2-FA-63	SSD2-FA-80	SSD2-FA-100
Clevis bracket (CB)	SSD2-CB-40	SSD2-CB-50	SSD2-CB-63	SSD2-CB-80	SSD2-CB-100

*1:The foot mounting bracket is provided as 2 pcs./set.

Internal structure and parts list

● SSD2-KL4-40, 50

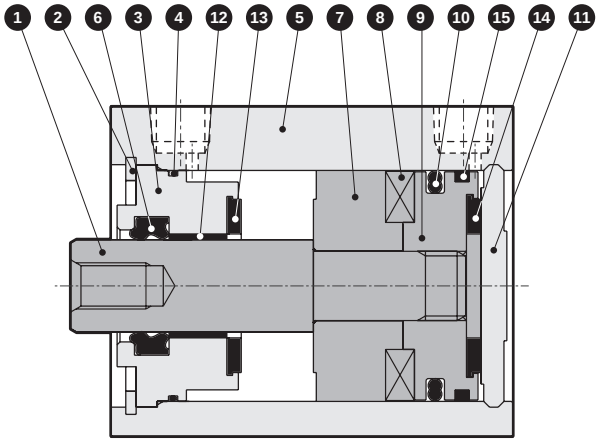

● SSD2-KL4-63 to 100

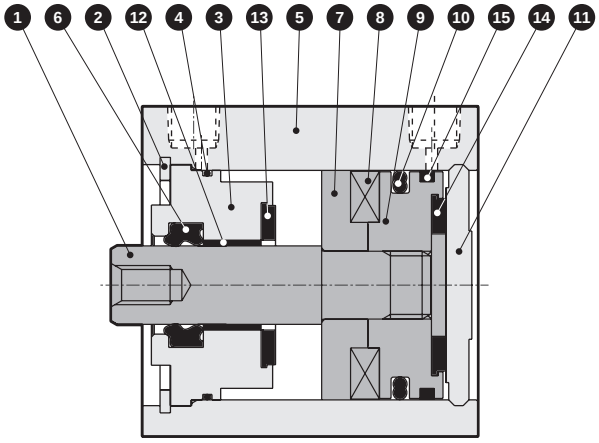

No.	Part name	Material	Remarks
1	Piston rod	Steel	Industrial chrome plating
2	C-snap ring	Steel	Zinc phosphate
3	Rod metal	ø40, ø50: Special aluminum ø63 to ø100: Aluminum alloy	ø40, ø50: Alumite ø63 to ø100: Chromate
4	Rod metal gasket	Nitrile rubber	
5	Body	Aluminum alloy	Hard alumite
6	Rod packing	Nitrile rubber	
7	Spacer	ø40, ø50: Special resin ø63 to ø100: Aluminum alloy	ø63 to ø100: Chromate

No.	Part name	Material	Remarks
8	Magnet	Plastic	
9	Piston	Aluminum alloy	
10	Piston packing	Nitrile rubber	
11	Cover	Aluminum alloy	Alumite
12	Bush	Oiles drymet	
13	Cushion rubber (R)	Urethane rubber	
14	Cushion rubber (H)	Urethane rubber	
15	Wear ring	Polyacetal resin	

Repair parts list

Bore size (mm)	Kit No.	Repair parts No.
ø40	SSD2-K-40K	4 6 10 13 14 15
ø50	SSD2-K-50K	
ø63	SSD2-K-63K	
ø80	SSD2-K-80K	
ø100	SSD2-K-100K	

Dimensions

● SSD2-KL4-40 to 100

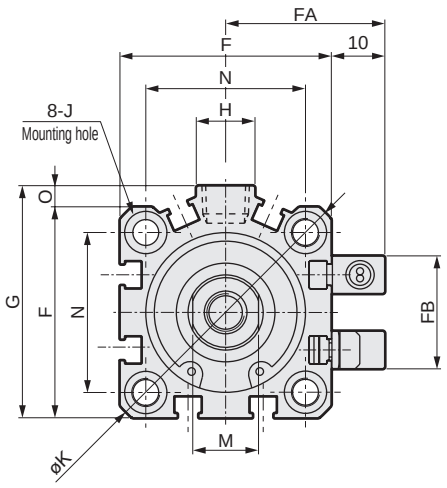

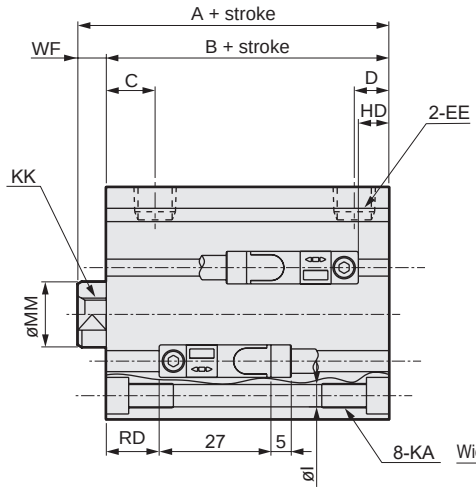

● Rod end male thread

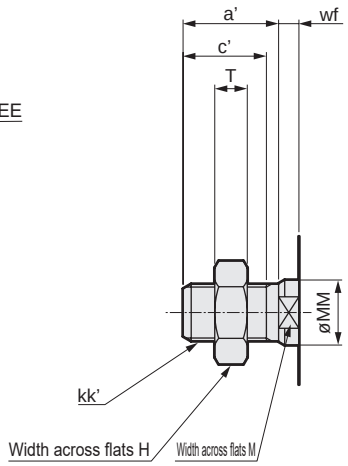

Code / Bore size (mm)	A	B	C	D	EE	F	FA	FB	G	H	I	J
ø40	66.5	59.5	12	8.5	Rc1/8	52	36	31	57	15	5.5	Spot face ø9 depth 5.5
ø50	68.5	60.5	10.5	10.5	Rc1/4	64	42	32	71	18	6.9	Spot face ø11 depth 6.5
ø63	74	66	13	11	Rc1/4	77	48.5	32	84	23	8.7	Spot face ø14 depth 9
ø80	83.5	73.5	16	13	Rc3/8	98	59	32	104	31	10.5	Spot face ø17.5 depth 11
ø100	95	83	23	15	Rc3/8	117	68.5	32	123.5	38	10.5	Spot face ø17.5 depth 11

Code / Bore size (mm)	K	KA	KK	M	MM	N	O	WF	HD	RD
ø40	69	M6 depth 11	M8 depth 13	14	16	40	5	7	12.5	18
ø50	86	M8 depth 13	M10 depth 15	17	20	50	7	8	13.5	18
ø63	103	M10 depth 25	M10 depth 15	17	20	60	7	8	18.5	18.5
ø80	132	M12 depth 28	M16 depth 21	22	25	77	6	10	23.5	21
ø100	156	M12 depth 28	M20 depth 27	27	30	94	6.5	12	29	25

*1 : The A + stroke and B + stroke when using a custom stroke are the same as those when using the next longer standard stroke.
*2 : For dimensions of individual accessories, refer to pages 1046 to 1049.

● Rod end male thread

Code / Bore size (mm)	a'	c'	H	kk'	M	MM	T	wf
ø40	23.5	20.5	22	M14x1.5	14	16	8	5
ø50	28.5	26	27	M18x1.5	17	20	11	5
ø63	28.5	26	27	M18x1.5	17	20	11	5
ø80	35.5	32.5	32	M22x1.5	22	25	13	8
ø100	35.5	32.5	41	M26x1.5	27	30	16	8

Dimensions with mounting bracket

● Axial foot (LB)
SSD2-KL4-40 to 100 -LB

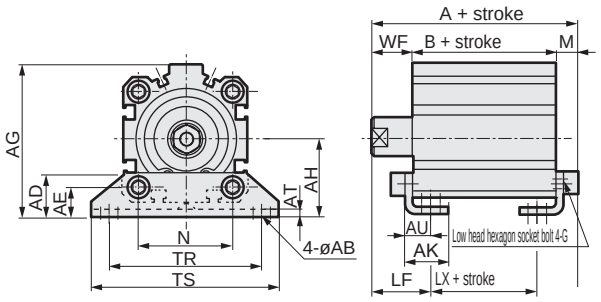

Rod end male thread

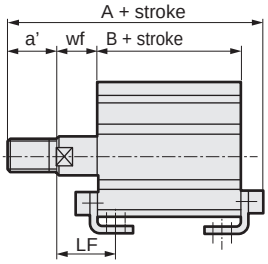

● Clevis bracket (CB)
SSD2-KL4-40 to 100 -CB

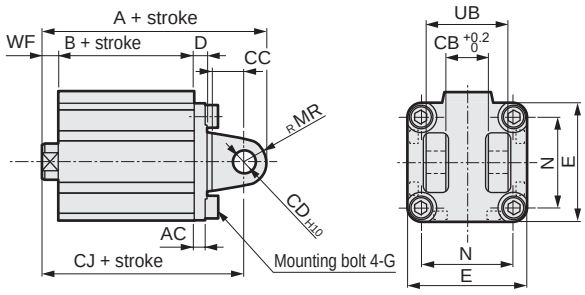

Rod end male thread

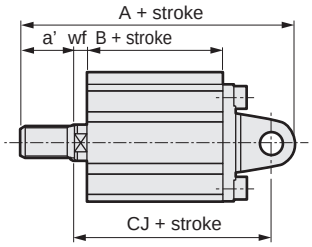

Code	Common dimensions													
Bore size (mm)	AB	AD	AE	AG	AH	AK	AT	AU	G	N	TR	TS	M	LF
ø40	7	18	13	64	33	18.2	3.2	11.2	M6x16	40	64	78	7.2	25
ø50	9	22	14	78	39	22.7	3.2	14.7	M8x20	50	79	95	8.2	29.5
ø63	11	26	16	91.5	46	25.2	3.2	16.2	M10x25	60	95	113	9.2	31
ø80	13	31.5	20.5	114	59	30.5	4.5	19.5	M12x40	77	118	140	11.5	35
ø100	13	35	24	136	71	35.5	6	23	M12x40	94	137	162	13	39

Code	Female thread				Male thread				
Bore size (mm)	WF	A	B	LX	a'	wf	A	B	LX
ø40	17	83.7	59.5	43.5	23.5	15	105.2	59.5	43.5
ø50	18	86.7	60.5	37.5	28.5	15	112.2	60.5	37.5
ø63	18	93.2	66	40	28.5	15	118.7	66	40
ø80	20	105	73.5	43.5	35.5	18	138.5	73.5	43.5
ø100	22	118	83	49	35.5	18	149.5	83	49

Code	Common dimensions									
Bore size (mm)	AC	CB	CC	CD	D	E	G	MR	N	UB
ø40	5	18.2	14	10	6	52	M6x16	10	40	36
ø50	6	22.2	20	14	7	64	M8x20	14	50	44
ø63	7	22.2	20	14	8	77	M10x25	14	60	44
ø80	9	28.2	27	18	10	98	M12x40	18	77	56
ø100	12	32.2	31	22	13	117	M12x40	22	94	64

Code	Female thread				Male thread				
Bore size (mm)	WF	A	B	CJ	a'	wf	A	B	CJ
ø40	7	98.5	59.5	88.5	23.5	5	120	59.5	86.5
ø50	8	110.5	60.5	96.5	28.5	5	136	60.5	93.5
ø63	8	118	66	104	28.5	5	143.5	66	101
ø80	10	139.5	73.5	121.5	35.5	8	173	73.5	119.5
ø100	12	162	83	140	35.5	8	193.5	83	136

● Rod side flange (FA)
SSD2-KL4-40 to 100 -FA

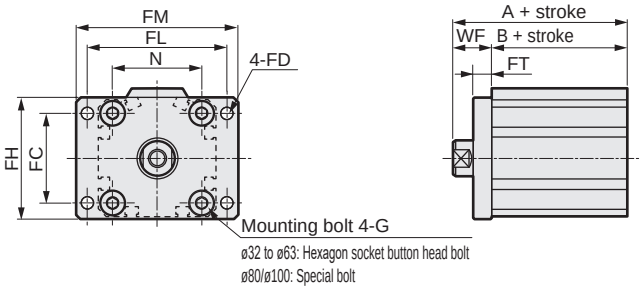

Rod end male thread

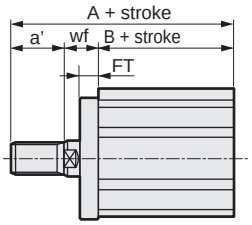

● Head side flange (FB)
SSD2-KL4-40 to 100 -FB

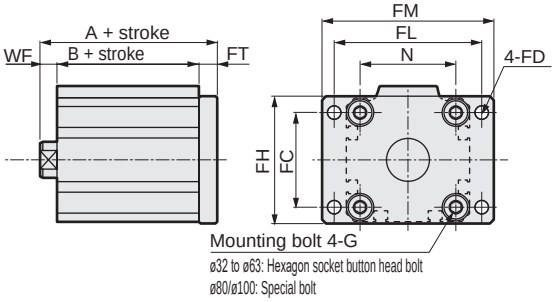

Rod end male thread

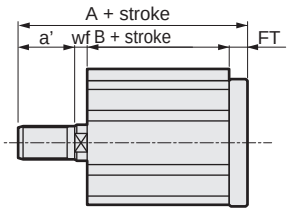

Code	Common dimensions								Female thread			Male thread			
Bore size (mm)	FC	FD	FH	FL	FM	FT	N	G	WF	A	B	a'	wf	A	B
ø40	40	5.5	54	62	72	8	40	M6x16	17	76.5	59.5	23.5	15	98	59.5
ø50	50	6.6	67	76	89	9	50	M8x20	18	78.5	60.5	28.5	15	104	60.5
ø63	60	9	80	92	108	9	60	M10x25	18	84	66	28.5	15	109.5	66
ø80	77	11	99	116	134	11	77	M12x40	20	93.5	73.5	35.5	18	127	73.5
ø100	94	11	117	136	154	11	94	M12x40	22	105	83	35.5	18	136.5	83

Code	Common dimensions								Female thread			Male thread			
Bore size (mm)	FC	FD	FH	FL	FM	FT	N	G	WF	A	B	a'	wf	A	B
ø40	40	5.5	54	62	72	8	40	M6x16	7	74.5	59.5	23.5	5	96	59.5
ø50	50	6.6	67	76	89	9	50	M8x20	8	77.5	60.5	28.5	5	103	60.5
ø63	60	9	80	92	108	9	60	M10x25	8	83	66	28.5	5	108.5	66
ø80	77	11	99	116	134	11	77	M12x40	10	94.5	73.5	35.5	8	128	73.5
ø100	94	11	117	136	154	11	94	M12x40	12	106	83	35.5	8	137.5	83

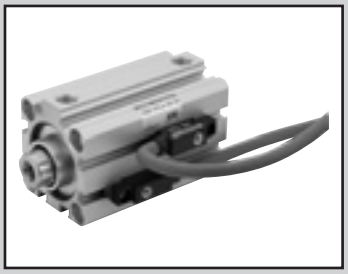

Compact cylinder double acting/high load/
with strong magnetic field proof switch/with coil scraper

SSD2-KG1L4 Series

● Bore size: ø40/ø50/ø63/ø80/ø100

JIS symbol

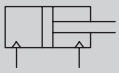

RoHS

Specifications

Item	SSD2-KG1L4				
Bore size mm	ø40	ø50	ø63	ø80	ø100
Actuation	Double acting				
Working fluid	Compressed air				
Max. working pressure MPa	1.0 (≈150 psi, 10 bar)				
Min. working pressure MPa	0.15 (≈22 psi, 1.5 bar)		0.1 (≈15 psi, 1 bar)		
Proof pressure MPa	1.6 (≈230 psi, 16 bar)				
Ambient temperature °C	-10 (14°F) to 60 (140°F) (no freezing)				
Port size	Rc1/8	Rc1/4		Rc3/8	
Stroke tolerance mm	$^{+2.0}_{0}$				
Working piston speed mm/s	50 to 500		50 to 300		
Cushion	Rubber cushion				
Lubrication	Not required (use turbine oil class 1 ISO VG32 if necessary for lubrication)				
Allowable absorbed energy J	0.63	0.98	1.56	2.51	3.92

Stroke

Bore size (mm)	Standard stroke (mm)	Max. stroke (mm)	Min. stroke (mm)
ø40	20/25/30/35/40 45/50/75/100	100	20
ø50			
ø63			
ø80			
ø100			

*1:The custom stroke is available in 1 mm increments. However, the total length is the same as that of the next longer standard stroke.

Number of installed switches and min. stroke (mm)

Switch quantity	1	2	3
Switch model No. / Bore size (mm)	V0		
ø40	20	20	35
ø50	20	20	35
ø63	20	20	35
ø80	20	20	35
ø100	20	20	35

Custom stroke

● SSD2-KG1L4 Series

Item	Standard products	
	Standard stroke body with spacer	
Model No.	Refer to How to order.	
Description	A spacer is added to the standard stroke body to adjust the stroke in 1 mm increments.	
Stroke range	Bore size	Stroke range
	40 to 100	1 to 99
Example of model No.	Model No.: SSD2-KG1L4-40-38 A +2 mm spacer is added to the SSD2-KG1L4-40-40 standard cylinder to create 38 mm stroke. B + stroke is 99.5mm.	

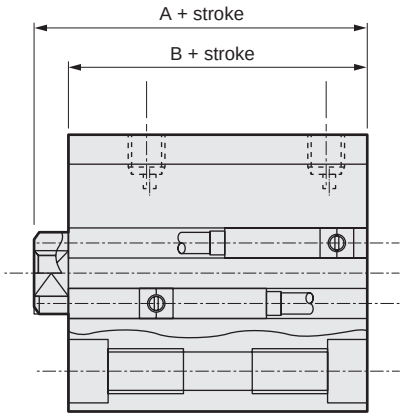

Switch specifications

Item	2-wire reed	
	V0	
Applications	For relay, programmable controller	
Load voltage	12/24 VDC	110 VAC
Load current	5 to 50 mA	7 to 20 mA
Internal voltage drop	3.0 V or less (with 40 mA load current)	
Indicator	LED (Lit when ON)	
Leakage current	0 mA	
Weight g	1 m:63 3 m:170 5 m:277	

Cylinder weight table

(the weight of the switches is when there are 2 cylinder switches.)

(Unit: g)

Stroke (mm) / Bore size (mm)	20	25	30	35	40	45	50	75	100
ø40	628	655	681	708	734	761	787	920	1052
ø50	960	1002	1044	1086	1128	1170	1212	1422	1632
ø63	1350	1406	1461	1517	1572	1628	1683	1961	2238
ø80	2247	2334	2421	2508	2595	2682	2769	3204	3639
ø100	3228	3342	3455	3569	3682	3796	3909	4477	5044

Theoretical thrust table

(Unit: N)

Bore size (mm)	Operating direction	Working pressure MPa										
		0.1	0.15	0.2	0.3	0.4	0.5	0.6	0.7	0.8	0.9	1.0
ø40	Push	-	$1.88x10^2$	$2.51x10^2$	$3.77x10^2$	$5.03x10^2$	$6.28x10^2$	$7.54x10^2$	$8.80x10^2$	$1.01x10^3$	$1.13x10^3$	$1.26x10^3$
	Pull	-	$1.58x10^2$	$2.11x10^2$	$3.17x10^2$	$4.22x10^2$	$5.28x10^2$	$6.33x10^2$	$7.39x10^2$	$8.44x10^2$	$9.50x10^2$	$1.06x10^3$
ø50	Push	-	$2.95x10^2$	$3.93x10^2$	$5.89x10^2$	$7.85x10^2$	$9.82x10^2$	$1.18x10^3$	$1.37x10^3$	$1.57x10^3$	$1.77x10^3$	$1.96x10^3$
	Pull	-	$2.47x10^2$	$3.30x10^2$	$4.95x10^2$	$6.60x10^2$	$8.25x10^2$	$9.90x10^2$	$1.15x10^3$	$1.32x10^3$	$1.48x10^3$	$1.65x10^3$
ø63	Push	$3.12x10^2$	$4.68x10^2$	$6.23x10^2$	$9.35x10^2$	$1.25x10^3$	$1.56x10^3$	$1.87x10^3$	$2.18x10^3$	$2.49x10^3$	$2.81x10^3$	$3.12x10^3$
	Pull	$2.80x10^2$	$4.20x10^2$	$5.61x10^2$	$8.41x10^2$	$1.12x10^3$	$1.40x10^3$	$1.68x10^3$	$1.96x10^3$	$2.24x10^3$	$2.52x10^3$	$2.80x10^3$
ø80	Push	$5.03x10^2$	$7.54x10^2$	$1.01x10^3$	$1.51x10^3$	$2.01x10^3$	$2.51x10^3$	$3.02x10^3$	$3.52x10^3$	$4.02x10^3$	$4.52x10^3$	$5.03x10^3$
	Pull	$4.54x10^2$	$6.80x10^2$	$9.07x10^2$	$1.36x10^3$	$1.81x10^3$	$2.27x10^3$	$2.72x10^3$	$3.17x10^3$	$3.63x10^3$	$4.08x10^3$	$4.54x10^3$
ø100	Push	$7.85x10^2$	$1.18x10^3$	$1.57x10^3$	$2.36x10^3$	$3.14x10^3$	$3.93x10^3$	$4.71x10^3$	$5.50x10^3$	$6.28x10^3$	$7.07x10^3$	$7.85x10^3$
	Pull	$7.15x10^2$	$1.07x10^3$	$1.43x10^3$	$2.14x10^3$	$2.86x10^3$	$3.57x10^3$	$4.29x10^3$	$5.00x10^3$	$5.72x10^3$	$6.43x10^3$	$7.15x10^3$

How to order

SSD2-KG1L4 - 50 - 40 - V0 - D - N - LB - I

Model No.

Ⓐ Bore size

Ⓑ Stroke

Ⓒ Switch model No.

Ⓓ Switch quantity

Ⓔ Option

Ⓕ Mounting bracket *1

Ⓖ Accessory *2

Code	Description
Ⓐ Bore size (mm)	
40	ø40
50	ø50
63	ø63
80	ø80
100	ø100

Ⓑ Stroke (mm)

Bore size	Stroke *1	Custom stroke *2
ø40 to ø100	20 to 100	In 1 mm increments

*1 : Refer to page 1030 for the number of installed switches and the min. stroke.
*2 : The total length is the same as that of the next longer standard stroke.

Ⓒ Switch model No.

Lead wire Straight	Contact	Voltage AC	Voltage DC	Indicator	Lead wire
V0*	Reed	●	●	1-color LED	2-wire

* Lead wire length	
Blank	1 m (standard)
3	3 m (option)
5	5 m (option)

Ⓓ Switch quantity	
R	1 on rod side
H	1 on head side
D	2
T	3

Ⓔ Option	
Blank	Rod end female thread
N	Rod end male thread

Ⓕ Mounting bracket	
Blank	Without mounting bracket
LB	Axial foot (made-to-order product)
CB	Clevis bracket (pin and snap ring included)
FA	Rod side flange (made-to-order product)
FB	Head side flange

Ⓖ Accessory (available when rod end male thread "N" is selected)	
I	Rod eye
Y	Rod clevis (pin and snap ring included)

⚠ Precautions for model No. selection

*1 : The mounting bracket is included at shipment.
*2 : "I" and "Y" cannot be selected together.

[Example of model No.]

SSD2-KG1L4-50-40-V0-D-N-LB-I

Model: Compact cylinder
Double acting/high load/with coil scraper/with strong magnetic field proof switch

Ⓐ Bore size : ø50 mm
Ⓑ Stroke : 40 mm
Ⓒ Switch model No. : Reed V0 switch, Lead wire length 1 m
Ⓓ Switch quantity : 2 pcs. included
Ⓔ Option : Rod end male thread
Ⓕ Mounting bracket : Axial foot
Ⓖ Accessory : Rod eye

How to order switch

SW - V0

Switch model No.
(Item Ⓒ above)

How to order mounting bracket

Bore size (mm) / Mounting bracket	ø40	ø50	ø63	ø80	ø100
Flange (FB)	SSD2-FA-40	SSD2-FA-50	SSD2-FA-63	SSD2-FA-80	SSD2-FA-100
Clevis bracket (CB)	SSD2-CB-40	SSD2-CB-50	SSD2-CB-63	SSD2-CB-80	SSD2-CB-100

*1:The foot mounting bracket is provided as 2 pcs./set.

Internal structure and parts list

● SSD2-KG1L4-40 to 100

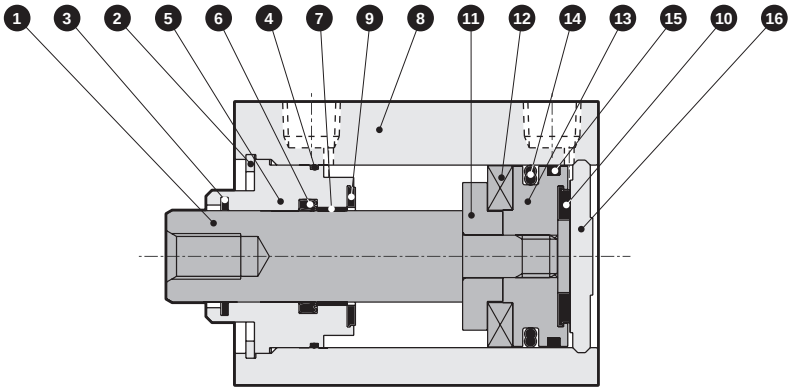

No.	Part name	Material	Remarks
1	Piston rod	Steel	Industrial chrome plating
2	C-snap ring for hole	Steel	Zinc phosphate
3	Coil scraper	Phosphor bronze	
4	Rod metal gasket	Nitrile rubber	
5	Rod metal	ø40, ø50: Special aluminum ø63 to ø100: Aluminum alloy	ø40, ø50: Alumite ø63 to ø100: Chromate
6	Rod packing	Nitrile rubber	
7	Bush	Oiles drymet	
8	Body	Aluminum alloy	Hard alumite

No.	Part name	Material	Remarks
9	Cushion rubber R	Urethane rubber	
10	Cushion rubber H	Urethane rubber	
11	Spacer	Aluminum alloy	
12	Magnet	Plastic	
13	Piston	Aluminum alloy	Chromate
14	Piston packing	Nitrile rubber	
15	Wear ring	Polyacetal resin	
16	Cover	Aluminum alloy	Alumite

Repair parts list

Part name / Bore size (mm)	Kit No.	Repair parts No.
ø40	SSD2-KG1-40K	3 4 6 9 10 14 15
ø50	SSD2-KG1-50K	
ø63	SSD2-KG1-63K	
ø80	SSD2-KG1-80K	
ø100	SSD2-KG1-100K	

SCP*3
CMK2
CMA2
SCM
SCG
SCA2
SCS2
CKV2
CAV2/ COVP/N2
SSD2
SSG
SSD
CAT
MDC2
MVC
SMG
MSD/ MSDG
FC*
STK
SRL3
SRG3
SRM3
SRT3
MRL2
MRG2
SM-25
ShkAbs
FJ
FK
Spd Contr
Ending

Dimensions

● SSD2-KG1L4-40 to 100

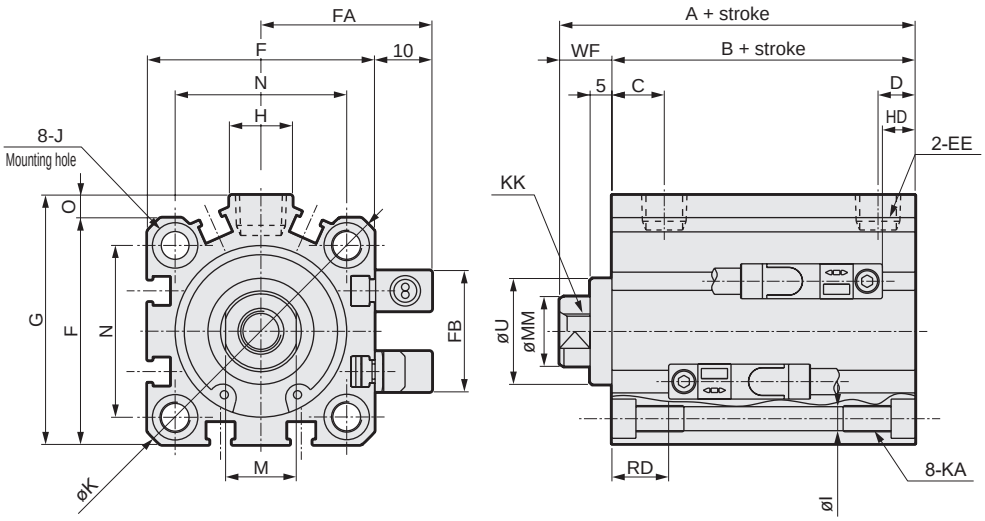

● Rod end male thread

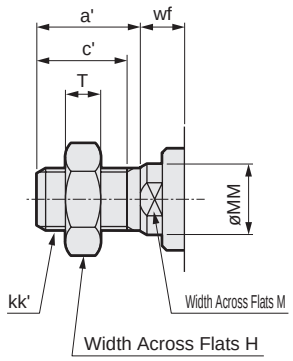

Code / Bore size (mm)	A	B	C	D	EE	F	FA	FB	G	H	I	J
ø40	71.5	59.5	12	8.5	Rc1/8	52	36	31	57	15	5.5	Spot face ø9 depth 5.5
ø50	73.5	60.5	10.5	10.5	Rc1/4	64	42	32	71	18	6.9	Spot face ø11 depth 6.5
ø63	79	66	13	11	Rc1/4	77	48.5	32	84	23	8.7	Spot face ø14 depth 9
ø80	88.5	73.5	16	13	Rc3/8	98	59	32	104	31	10.5	Spot face ø17.5 depth 11
ø100	100	83	23	15	Rc3/8	117	68.5	32	123.5	38	10.5	Spot face ø17.5 depth 11

Code / Bore size (mm)	K	KA	KK	M	MM	N	O	U	WF	HD	RD
ø40	69	M6 depth 11	M8 depth 13	14	16	40	5	28 h9	12	12.5	18
ø50	86	M8 depth 13	M10 depth 15	17	20	50	7	35 h9	13	13.5	18
ø63	103	M10 depth 25	M10 depth 15	17	20	60	7	35 h9	13	18.5	18.5
ø80	132	M12 depth 28	M16 depth 21	22	25	77	6	43 h9	15	23.5	21
ø100	156	M12 depth 28	M20 depth 27	27	30	94	6.5	59 h9	17	29	25

*1: The A + stroke and B + stroke when using a custom stroke are the same as those when using the next longer standard stroke.

***2: For dimensions of individual accessories, refer to pages 1046 to 1049.**

● Rod end male thread

Code / Bore size (mm)	a'	c'	H	kk'	M	MM	T	wf
ø40	23.5	20.5	22	M 14 x 1.5	14	16	8	10
ø50	28.5	26	27	M 18 x 1.5	17	20	11	10
ø63	28.5	26	27	M 18 x 1.5	17	20	11	10
ø80	35.5	32.5	32	M 22 x 1.5	22	25	13	13
ø100	35.5	32.5	41	M 26 x 1.5	27	30	16	13

Dimensions with mounting bracket

● Clevis bracket (CB)
SSD2-KG1L4-40 to 100 -CB

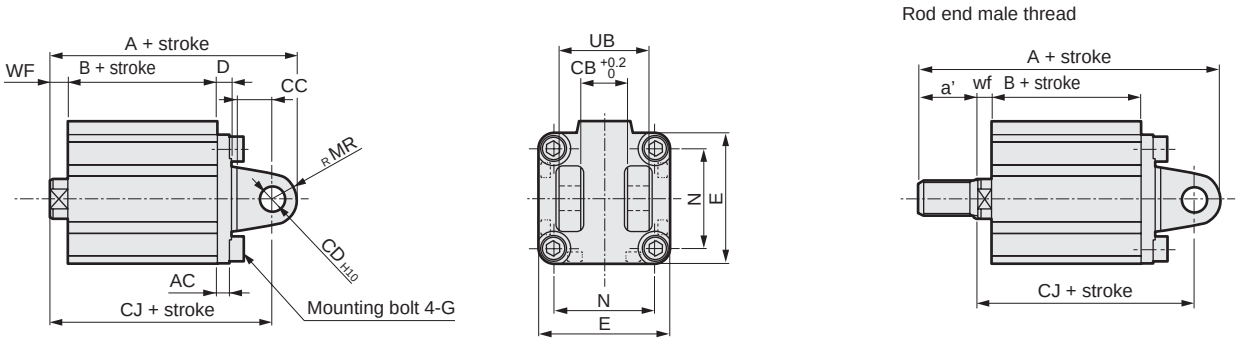

Code	Common dimensions										Female thread				Male thread				
Bore size (mm)	AC	CB	CC	CD	D	E	G	MR	N	UB	WF	A	B	CJ	a'	wf	A	B	CJ
ø40	5	18.2	14	10	6	52	M6x16	10	40	36	7	103.5	59.5	93.5	23.5	5	125	59.5	91.5
ø50	6	22.2	20	14	7	64	M8x20	14	50	44	8	115.5	60.5	101.5	28.5	5	141	60.5	98.5
ø63	7	22.2	20	14	8	77	M10x25	14	60	44	8	123	66	109	28.5	5	148.5	66	106
ø80	9	28.2	27	18	10	98	M12x40	18	77	56	10	144.5	73.5	126.5	35.5	8	178	73.5	124.5
ø100	12	32.2	31	22	13	117	M12x40	22	94	64	12	167	83	145	35.5	8	198.5	83	141

● Head side flange (FB)
SSD2-KG1L4-40 to 100 -FB

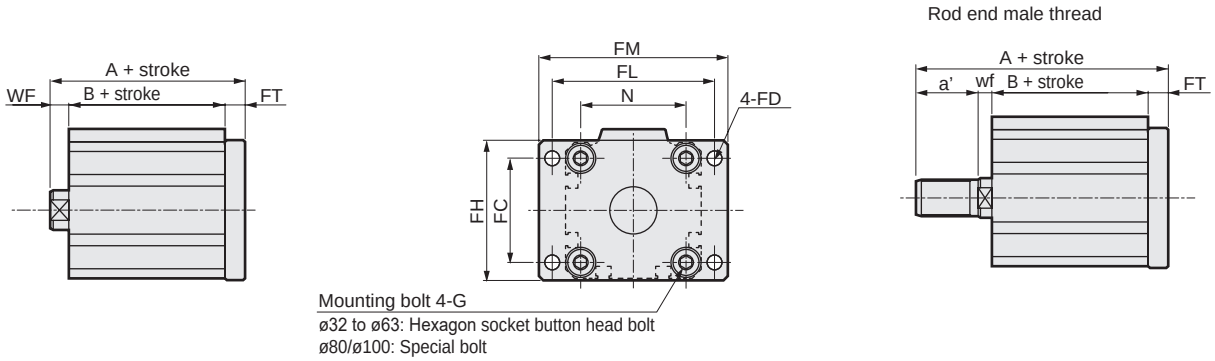

Code	Common dimensions								Female thread			Male thread			
Bore size (mm)	FC	FD	FH	FL	FM	FT	N	G	WF	A	B	a'	wf	A	B
ø40	40	5.5	54	62	72	8	40	M6x16	7	79.5	59.5	23.5	5	101	59.5
ø50	50	6.6	67	76	89	9	50	M8x20	8	82.5	60.5	28.5	5	108	60.5
ø63	60	9	80	92	108	9	60	M10x25	8	88	66	28.5	5	113.5	66
ø80	77	11	99	116	134	11	77	M12x40	10	99.5	73.5	35.5	8	133	73.5
ø100	94	11	117	136	154	11	94	M12x40	12	111	83	35.5	8	142.5	83

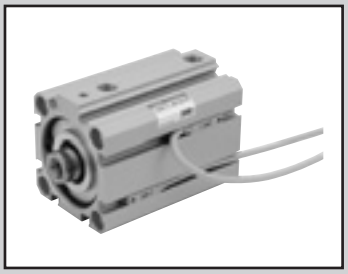

Compact cylinder double acting/single rod

SSD2-P7*/P5* Series

● Bore size: ø12/ø16/ø20/ø25/ø32/ø40/ø50/ø63/ø80/ø100/ø125/ø140/ø160

JIS symbol

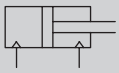

RoHS

Specifications

Item		SSD2-P7*/P5* SSD2-L-P7*/P5* (with switch)												
Bore size	mm	ø12	ø16	ø20	ø25	ø32	ø40	ø50	ø63	ø80	ø100	ø125	ø140	ø160
Actuation		Double acting												
Working fluid		Compressed air												
Max. working pressure	MPa	1.0 (≈150 psi, 10 bar)												
Min. working pressure	MPa	0.15 (≈22 psi, 1.5 bar)							0.1 (≈15 psi, 1 bar)					
Proof pressure	MPa	1.6 (≈230 psi, 16 bar)												
Ambient temperature	°C	-10 (14°F) to 60 (140°F) (no freezing)												
Port size		M5				Rc1/8 *1		Rc1/4		Rc3/8				
Pressure relief port size		M5										Rc3/8		
Stroke tolerance	mm	$^{+1.0}_{0}$										$^{+2.0}_{0}$		
Working piston speed	mm/s	50 to 500							50 to 300					
Cushion		None										Rubber cushion		
Lubrication		Not available												
Allowable absorbed energy	J	0.004	0.01	0.016	0.021	0.025	0.092	0.1	0.12	0.27	0.56	6.52	6.52	7.78

*1: The ø32 bore size with a 5 mm stroke and without a switch has a port size of M5.

Stroke

Bore size (mm)	Standard stroke (mm)	Max. stroke (mm)	Min. stroke (mm)
ø12	5/10/15/20 25/30	30	1(5) The value in ( ) is for types with one or two switches.
ø16			
ø20	5/10/15/20/25 30/35/40/45/50	50	
ø25			
ø32	5/10/15/20/25/30 35/40/45/50/75/100	100	
ø40			
ø50	10/15/20 25/30/35 40/45/50 75/100		
ø63			
ø80			
ø100			
ø125	10/20/30/40/50 75/100/125/150 175/200/250/300	300	
ø140			
ø160			

*1: Availability of custom stroke
Custom stroke is available in 1 mm increments. Total length when using a custom stroke is different between ø12 to ø100 and ø125 to ø160. Please be careful.
(ø12 to ø100) The dimensions of the total length with the custom stroke are the same as the next longer standard stroke.
(ø125 to ø160) Total length dimension with custom stroke is handled as custom stroke dedicated length.

2: Less than 5 mm with 1-color LED switch and less than 10 mm with 2-color LED, off-delay, T1 or T8* switch are not available.

Custom stroke

● SSD2-P7*, P5* Series

Item	Standard products	
	Standard stroke body with spacer	
Model No.	Refer to How to order.	
Description	A spacer is added to the standard stroke body to adjust the stroke in 1 mm increments.	
Stroke range	Bore size	Stroke range
	12/16	1 to 29
	20 to 25	1 to 49
	32 to 100	1 to 99
Example of model No.	Model No.: SSD2-32-38-P7 A +2 mm spacer is added to the SSD2-32-40-P7 standard cylinder to create 38 mm stroke. B + stroke is 73mm.	

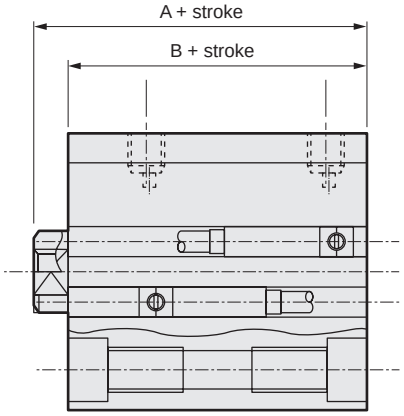

Switch specifications (F-switch)

● 1-color/2-color LED

Item	2-wire proximity	3-wire proximity	2-wire proximity		3-wire proximity		
	F2S	F3S	F2H/F2V	F2YH/F2YV	F3H/F3V	F3PH/F3PV (made to order)	F3YH/F3YV
Applications	Dedicated for programmable controller	For programmable controller, relay	Dedicated for programmable controller		For programmable controller, relay		
Output method	-	NPN output	-		NPN output	PNP output	NPN output
Power supply voltage	-	10 to 28 VDC	-		10 to 28 VDC	4.5 to 28 VDC	10 to 28 VDC
Load voltage	10 to 30 VDC	30 VDC or less	10 to 30 VDC	24 VDC ±10%	30 VDC or less		
Load current	5 to 20 mA	50 mA or less	5 to 20 mA		50 mA or less		
Indicator	LED (Lit when ON)		Yellow LED (Lit when ON)	Red/green LED (Lit when ON)	Yellow LED (Lit when ON)		Red/green LED (Lit when ON)
Leakage current	1 mA or less	10 μA or less	1 mA or less		10 μA or less		
Weight g	1 m:10 3 m:29						

Switch specifications (T-switch)

● 1-color/2-color LED/for AC magnetic field proof

Item	2-wire proximity	2-wire proximity			3-wire proximity				2-wire reed							2-wire proximity
	T1H/T1V	T2H/T2V/ T2JH/T2JV	T2YH/ T2YV	T2WH/ T2WV	T3H/ T3V	T3PH/ T3PV	T3YH/ T3YV	T3WH/ T3WV	T0H/T0V		T5H/T5V		T8H/T8V			T2YD(*4) T2YDT
Applications	For programmable controller, relay, compact solenoid valve	Dedicated for programmable controller			For programmable controller, relay				For programmable controller, relay		For programmable controller, relay, IC circuit (no indicator lamp), serial connection		For programmable controller, relay			Dedicated for programmable controller
Output method	-				NPN output	PNP output	NPN output	NPN output	-							
Pwr. supp. V.	-				10 to 28 VDC				-							
Load voltage	85 to 265 VAC	10 to 30 VDC		24 VDC ±10%	30 VDC or less				12/24 VDC	100/110 VAC	5/12/24 VDC	100/110 VAC	12/24 VDC	110 VAC	220 VAC	24 VDC ±10%
Load current	5 to 100 mA	5 to 20 mA (*3)			100 mA or less		50 mA or less		5 to 50 mA	7 to 20 mA	50 mA or less	20 mA or less	5 to 50 mA	7 to 20 mA	7 to 10 mA	5 to 20 mA
Indicator	LED (Lit when ON)	LED (Lit when ON)	Red/green LED (Lit when ON)	Red/green LED (Lit when ON)	LED (Lit when ON)	Yellow LED (Lit when ON)	Red/green LED (Lit when ON)	Red/green LED (Lit when ON)	LED (Lit when ON)		No indicator lamp		LED (Lit when ON)			Red/green LED (Lit when ON)
Leakage current	≤ 1 mA at 100 VAC, ≤ 2 mA at 200 VAC	1 mA or less			10 μA or less				0 mA							1 mA or less
Weight g	1 m:33 3 m:87 5 m:142	1 m:18 3 m:49 5 m:80	1 m:33 3 m:87 5 m:142	1 m:18 3 m:49 5 m:80	1 m:18 3 m:49 5 m:80		1 m:33 3 m:87 5 m:142	1 m:18 3 m:49 5 m:80	1 m:18 3 m:49 5 m:80				1 m:33 3 m:87 5 m:142			1 m:61 3 m:166 5 m:272

*1 : Refer to Ending Page 1 for detailed switch specifications and dimensions.
*2 : Switches other than the above models, such as switches with connectors, are also available. Refer to Ending Page 1.
*3 : The max. load current is 20 mA at 25°C. The current is lower than 20 mA if the operating ambient temperature around the switch is higher than 25˚C. (5 to 10 mA at 60°C)
*4 : Switch for AC magnetic field (T2YD/T2YDT) cannot be used in DC magnetic field.
*5 : The F-switch uses a bend-resistant lead wire.

Cylinder weight table (the weight of the switches is when there are 2 cylinder switches.)

● ø12 to ø100 (Unit: g)

Stroke (mm)	5		10		15		20		25		30		35	
Bore size (mm)	No switch	With switch	No switch	With switch	No switch	With switch	No switch	With switch	No switch	With switch	No switch	With switch	No switch	With switch
ø12	66	107	74	116	83	125	91	133	100	142	108	150	-	-
ø16	92	138	103	148	113	158	124	169	135	180	146	191	-	-
ø20	130	185	142	217	155	230	168	243	180	255	193	268	206	281
ø25	181	272	196	287	212	303	228	319	244	335	259	350	275	366
ø32	254	368	276	390	298	412	320	434	341	455	363	477	385	499
ø40	373	516	400	543	426	569	453	596	480	623	506	649	533	676
ø50	-	-	691	885	733	927	775	969	817	1011	860	1054	902	1096
ø63	-	-	939	1218	994	1273	1049	1328	1104	1383	1159	1438	1215	1494
ø80	-	-	1911	2324	1998	2411	2084	2497	2171	2584	2257	2670	2344	2757
ø100	-	-	2625	3192	2739	3306	2852	3419	2966	3533	3080	3647	3194	3761

Stroke (mm)	40		45		50		75		100	
Bore size (mm)	No switch	With switch	No switch	With switch	No switch	With switch	No switch	With switch	No switch	With switch
ø12	-	-	-	-	-	-	-	-	-	-
ø16	-	-	-	-	-	-	-	-	-	-
ø20	219	294	232	307	245	320	-	-	-	-
ø25	291	382	307	398	322	413	-	-	-	-
ø32	407	521	429	543	450	564	558	672	665	779
ø40	559	702	586	729	612	755	745	888	877	1020
ø50	944	1138	986	1180	1028	1222	1238	1432	1448	1642
ø63	1270	1549	1325	1604	1380	1659	1655	1934	1930	2209
ø80	2431	2844	2518	2931	2604	3017	3037	3450	3469	3882
ø100	3307	3874	3421	3988	3535	4102	4105	4672	4675	5242

● ø125 to ø160 (Unit: kg)

Stroke (mm)	10		20		30		40		50		75		100	
Bore size (mm)	No switch	With switch	No switch	With switch	No switch	With switch	No switch	With switch	No switch	With switch	No switch	With switch	No switch	With switch
ø125	6.12	6.22	6.39	6.49	6.65	6.75	6.92	7.02	7.18	7.28	7.90	8.25	8.51	8.61
ø140	8.50	8.61	8.80	8.91	9.11	9.22	9.41	9.52	9.72	9.83	10.54	10.94	11.24	11.35
ø160	11.86	11.98	12.24	12.36	12.62	12.74	13.00	13.12	13.38	13.50	14.39	14.90	15.28	15.40

Stroke (mm)	125		150		175		200		250		300	
Bore size (mm)	No switch	With switch	No switch	With switch	No switch	With switch	No switch	With switch	No switch	With switch	No switch	With switch
ø125	9.18	9.28	9.84	9.94	10.51	10.61	11.17	11.27	12.50	12.60	13.83	13.93
ø140	12.00	12.11	12.76	12.87	13.52	13.63	14.28	14.39	15.80	15.91	17.32	17.43
ø160	16.23	16.35	17.18	17.30	18.13	18.25	19.08	19.20	20.98	21.10	22.88	23.00

Note: Refer to Ending Pages 16 and 22 for weight of switches with 3 m and 5 m switch lead wire lengths.

SCP*3
CMK2
CMA2
SCM
SCG
SCA2
SCS2
CKV2
CAV2/COVP/N2
SSD2
SSG
SSD
CAT
MDC2
MVC
SMG
MSD/MSDG
FC*
STK
SRL3
SRG3
SRM3
SRT3
MRL2
MRG2
SM-25
ShkAbs
FJ
FK
Spd Contr
Ending

How to order

No switch (without magnet for switch)

SSD2 - 12 - 5 ———— N P7

With switch (built-in magnet for switch)

SSD2-L - 12 - 5 - T0H - R - N P7

- Ⓐ Model No.
- Ⓑ Bore size
- Ⓒ Stroke *1
- Ⓓ Switch * indicates the lead wire length. *2 *3 *4 *5
- Ⓔ Switch quantity
- Ⓕ Option
- Ⓖ Clean-room specifications *6

Precautions for model No. selection

*1 : Availability of custom stroke
Custom stroke is available in 1 mm increments. (Less than 5 mm with switch is not available.) Total length when using a custom stroke is different between ø12 to ø100 and ø125 to ø160. Please be careful.
[ø12 to ø100]
The dimensions of the total length with the custom stroke are the same as the next longer standard stroke.
[ø125 to ø160]
Dedicated custom stroke.

2 : The T2YD switch cannot be mounted on the ø12 and ø16 bore sizes.

3 : The T8 switch cannot be mounted on the ø12 to ø32 bore sizes.

*4 : The F-switch can only be mounted on the piping port surface of bore sizes ø20 and ø25.

*5 : The F-switch with L type lead wire on ø20 models cannot be selected on strokes of 15 mm or under.

*6 : "P5" and "P51" are made-to-order products.

*7 : Refer to pages 750 and 751 for combinations of variations/options.

*8 : F-switch cannot be selected.

[Example of model No.]

SSD2-L-12-5-T0H-R-NP7

Ⓐ Model	: Compact cylinder, standard
Ⓑ Bore size	: ø12 mm
Ⓒ Stroke	: 5 mm
Ⓓ Switch model No.	: Reed switch T0H, lead wire length 1 m
Ⓔ Switch quantity	: 1 on rod side
Ⓕ Option	: Rod end male thread
Ⓖ Clean-room specifications	: Exhaust port

Code	Description
Ⓐ Model No.	
SSD2	Double acting/single rod
SSD2-L	Double acting/single rod/with switch
Ⓑ Bore size (mm)	
12	ø12
16	ø16
20	ø20
25	ø25
32	ø32
40	ø40
50	ø50
63	ø63
80	ø80
100	ø100
125	ø125
140	ø140
160	ø160

Ⓒ Stroke (mm)

Refer to the stroke table on the following page.

Ⓓ Switch model No.

Lead wire Straight	Lead wire L-shaped	Contact	Voltage AC	Voltage DC	Indicator	Lead wire	12	16	20	25	32	40	50	63	80	100	125	140	160
-	F2S	Proximity		●	1-color LED	2-wire			●	●									
-	F3S	Proximity		●	1-color LED	3-wire			●	●									
F2H*	F2V*	Proximity		●	1-color LED	2-wire			●	●									
F3H*	F3V*	Proximity		●	1-color LED	3-wire			●	●									
F3PH*	F3PV*	Proximity		●	1-color LED (PNP output)	3-wire			●	●									
F2YH*	F2YV*	Proximity		●	2-color LED	2-wire			●	●									
F3YH*	F3YV*	Proximity		●	2-color LED	3-wire			●	●									
T0H*	T0V*	Reed	●	●	1-color LED	2-wire	●	●	●	●	●	●	●	●	●	●	●	●	●
T5H*	T5V*	Reed	●	●	No indicator lamp	2-wire	●	●	●	●	●	●	●	●	●	●	●	●	●
T8H*	T8V*	Reed	●	●	1-color LED	2-wire						●	●	●	●	●	●	●	●
T1H*	T1V*	Proximity	●		1-color LED	2-wire			●	●	●	●	●	●	●	●	●	●	●
T2H*	T2V*	Proximity		●	1-color LED	2-wire	●	●	●	●	●	●	●	●	●	●	●	●	●
T3H*	T3V*	Proximity		●	1-color LED	3-wire	●	●	●	●	●	●	●	●	●	●	●	●	●
T3PH*	T3PV*	Proximity		●	1-color LED (PNP output) (custom)	3-wire	●	●	●	●	●	●	●	●	●	●	●	●	●
T2WH*	T2WV*	Proximity		●	2-color LED	2-wire	●	●	●	●	●	●	●	●	●	●	●	●	●
T2YH*	T2YV*	Proximity		●	2-color LED	2-wire			●	●	●	●	●	●	●	●	●	●	●
T3WH*	T3WV*	Proximity		●	2-color LED	3-wire	●	●	●	●	●	●	●	●	●	●	●	●	●
T3YH*	T3YV*	Proximity		●	2-color LED	3-wire			●	●	●	●	●	●	●	●	●	●	●
T2YD*	-	Proximity		●	2-color LED AC magnetic field	2-wire			●	●	●	●	●	●	●	●	●	●	●
T2YDT*	-	Proximity		●	2-color LED AC magnetic field	2-wire			●	●	●	●	●	●	●	●	●	●	●
T2JH*	T2JV*	Proximity		●	1-color LED off-delay	2-wire			●	●	●	●	●	●	●	●	●	●	●

Bore size

* Lead wire length

Blank	1 m (standard)
3	3 m (option)
5	5 m (option) *8

Ⓔ Switch quantity

R	1 on rod side
H	1 on head side
D	2

Ⓕ Option

Blank	Rod end female thread
N	Rod end male thread

Ⓖ Clean-room specifications

	Structure	Material limitations
P7	Exhaust port	-
P71	Vacuum treatment	-
P5	Exhaust port	Copper/silicon/halogen-based materials (fluorine, chlorine, bromine) prohibited (custom)
P51	Vacuum treatment	Copper/silicon/halogen-based materials (fluorine, chlorine, bromine) prohibited (custom)

[Stroke table]

Stroke (mm)		Applicable bore size												
		ø12	ø16	ø20	ø25	ø32	ø40	ø50	ø63	ø80	ø100	ø125	ø140	ø160
Standard stroke	5	●	●	●	●	●	●							
	10	●	●	●	●	●	●	●	●	●	●	●	●	●
	15	●	●	●	●	●	●	●	●	●	●			
	20	●	●	●	●	●	●	●	●	●	●	●	●	●
	25	●	●	●	●	●	●	●	●	●	●			
	30	●	●	●	●	●	●	●	●	●	●	●	●	●
	35			●	●	●	●	●	●	●	●			
	40			●	●	●	●	●	●	●	●	●	●	●
	45			●	●	●	●	●	●	●	●			
	50			●	●	●	●	●	●	●	●	●	●	●
	75					●	●	●	●	●	●	●	●	●
	100					●	●	●	●	●	●	●	●	●
	125											●	●	●
	150											●	●	●
	175											●	●	●
	200											●	●	●
	250											●	●	●
	300											●	●	●
Min. stroke (mm)		1												
Max. stroke (mm)		30		50		100						300		
Custom stroke *1		In 1 mm increments												

Theoretical thrust table

(Unit: N)

Bore size (mm)	Operating direction	Working pressure MPa										
		0.1	0.15	0.2	0.3	0.4	0.5	0.6	0.7	0.8	0.9	1.0
ø12	Push	-	17.0	22.6	33.9	45.2	56.5	67.9	79.2	90.5	$1.02x10^2$	$1.13x10^2$
	Pull	-	12.7	17.0	25.4	33.9	42.4	50.9	59.4	67.9	76.3	84.8
ø16	Push	-	30.2	40.2	60.3	80.4	$1.01x10^2$	$1.21x10^2$	$1.41x10^2$	$1.61x10^2$	$1.81x10^2$	$2.01x10^2$
	Pull	-	22.6	30.2	45.2	60.3	75.4	90.5	$1.06x10^2$	$1.21x10^2$	$1.36x10^2$	$1.51x10^2$
ø20	Push	-	47.1	62.8	94.2	$1.26x10^2$	$1.57x10^2$	$1.88x10^2$	$2.20x10^2$	$2.51x10^2$	$2.83x10^2$	$3.14x10^2$
	Pull	-	35.3	47.1	70.7	94.2	$1.18x10^2$	$1.41x10^2$	$1.65x10^2$	$1.88x10^2$	$2.12x10^2$	$2.36x10^2$
ø25	Push	-	73.6	98.2	$1.47x10^2$	$1.96x10^2$	$2.45x10^2$	$2.95x10^2$	$3.44x10^2$	$3.93x10^2$	$4.42x10^2$	$4.91x10^2$
	Pull	-	56.7	75.6	$1.13x10^2$	$1.51x10^2$	$1.89x10^2$	$2.27x10^2$	$2.64x10^2$	$3.02x10^2$	$3.40x10^2$	$3.78x10^2$
ø32	Push	-	$1.21x10^2$	$1.61x10^2$	$2.41x10^2$	$3.22x10^2$	$4.02x10^2$	$4.83x10^2$	$5.63x10^2$	$6.43x10^2$	$7.24x10^2$	$8.04x10^2$
	Pull	-	90.5	$1.21x10^2$	$1.81x10^2$	$2.41x10^2$	$3.02x10^2$	$3.62x10^2$	$4.22x10^2$	$4.83x10^2$	$5.43x10^2$	$6.03x10^2$
ø40	Push	-	$1.88x10^2$	$2.51x10^2$	$3.77x10^2$	$5.03x10^2$	$6.28x10^2$	$7.54x10^2$	$8.80x10^2$	$1.01x10^3$	$1.13x10^3$	$1.26x10^3$
	Pull	-	$1.58x10^2$	$2.11x10^2$	$3.17x10^2$	$4.22x10^2$	$5.28x10^2$	$6.33x10^2$	$7.39x10^2$	$8.44x10^2$	$9.50x10^2$	$1.06x10^3$
ø50	Push	-	$2.95x10^2$	$3.93x10^2$	$5.89x10^2$	$7.85x10^2$	$9.82x10^2$	$1.18x10^3$	$1.37x10^3$	$1.57x10^3$	$1.77x10^3$	$1.96x10^3$
	Pull	-	$2.47x10^2$	$3.30x10^2$	$4.95x10^2$	$6.60x10^2$	$8.25x10^2$	$9.90x10^2$	$1.15x10^3$	$1.32x10^3$	$1.48x10^3$	$1.65x10^3$
ø63	Push	$3.12x10^2$	$4.68x10^2$	$6.23x10^2$	$9.35x10^2$	$1.25x10^3$	$1.56x10^3$	$1.87x10^3$	$2.18x10^3$	$2.49x10^3$	$2.81x10^3$	$3.12x10^3$
	Pull	$2.80x10^2$	$4.20x10^2$	$5.61x10^2$	$8.41x10^2$	$1.12x10^3$	$1.40x10^3$	$1.68x10^3$	$1.96x10^3$	$2.24x10^3$	$2.52x10^3$	$2.80x10^3$
ø80	Push	$5.03x10^2$	$7.54x10^2$	$1.01x10^3$	$1.51x10^3$	$2.01x10^3$	$2.51x10^3$	$3.02x10^3$	$3.52x10^3$	$4.02x10^3$	$4.52x10^3$	$5.03x10^3$
	Pull	$4.54x10^2$	$6.80x10^2$	$9.07x10^2$	$1.36x10^3$	$1.81x10^3$	$2.27x10^3$	$2.72x10^3$	$3.17x10^3$	$3.63x10^3$	$4.08x10^3$	$4.54x10^3$
ø100	Push	$7.85x10^2$	$1.18x10^3$	$1.57x10^3$	$2.36x10^3$	$3.14x10^3$	$3.93x10^3$	$4.71x10^3$	$5.50x10^3$	$6.28x10^3$	$7.07x10^3$	$7.85x10^3$
	Pull	$7.15x10^2$	$1.07x10^3$	$1.43x10^3$	$2.14x10^3$	$2.86x10^3$	$3.57x10^3$	$4.29x10^3$	$5.00x10^3$	$5.72x10^3$	$6.43x10^3$	$7.15x10^3$
ø125	Push	$1.23x10^3$	$1.84x10^3$	$2.45x10^3$	$3.68x10^3$	$4.91x10^3$	$6.14x10^3$	$7.36x10^3$	$8.59x10^3$	$9.82x10^3$	$1.10x10^4$	$1.23x10^4$
	Pull	$1.13x10^3$	$1.70x10^3$	$2.26x10^3$	$3.39x10^3$	$4.52x10^3$	$5.65x10^3$	$6.79x10^3$	$7.92x10^3$	$9.05x10^3$	$1.02x10^4$	$1.13x10^4$
ø140	Push	$1.54x10^3$	$2.31x10^3$	$3.08x10^3$	$4.62x10^3$	$6.16x10^3$	$7.70x10^3$	$9.24x10^3$	$1.08x10^4$	$1.23x10^4$	$1.39x10^4$	$1.54x10^4$
	Pull	$1.44x10^3$	$2.16x10^3$	$2.89x10^3$	$4.33x10^3$	$5.77x10^3$	$7.22x10^3$	$8.66x10^3$	$1.01x10^4$	$1.15x10^4$	$1.30x10^4$	$1.44x10^4$
ø160	Push	$2.01x10^3$	$3.02x10^3$	$4.02x10^3$	$6.03x10^3$	$8.04x10^3$	$1.01x10^4$	$1.21x10^4$	$1.41x10^4$	$1.61x10^4$	$1.81x10^4$	$2.01x10^4$
	Pull	$1.88x10^3$	$2.83x10^3$	$3.77x10^3$	$5.65x10^3$	$7.54x10^3$	$9.42x10^3$	$1.13x10^4$	$1.32x10^4$	$1.51x10^4$	$1.70x10^4$	$1.88x10^4$

Dimensions

● SSD2-L-12 to 25-P7*/P5* (with switch, TOH/V, T5H/V, T2H/V, T3H/V)

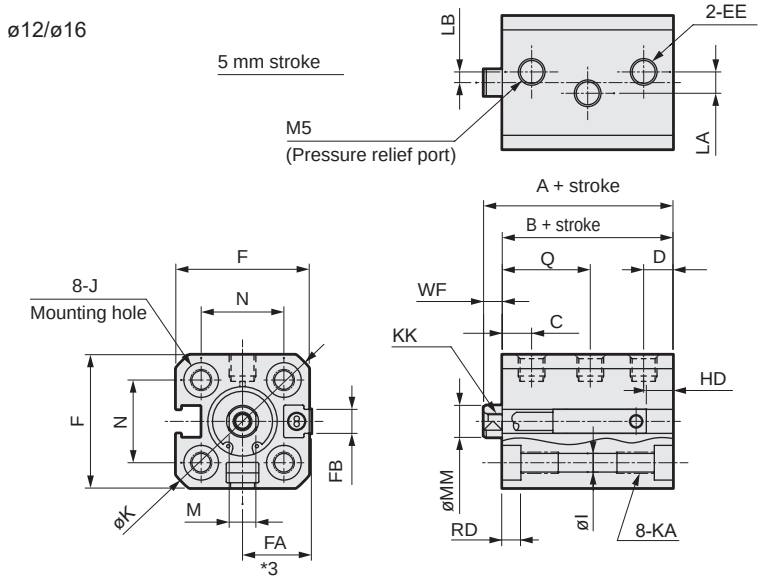

● Rod end male thread

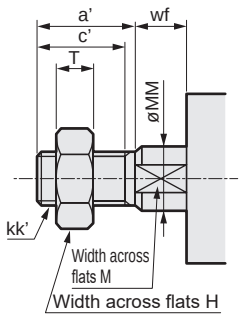

● SSD2-12 to 25-P7*/P5* (without switch)

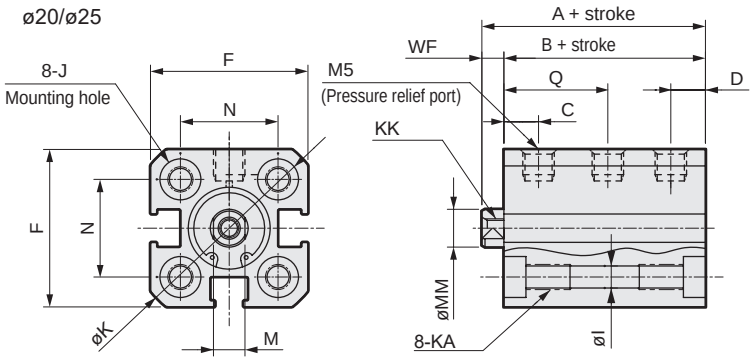

Code / Bore size (mm)	No switch A *1	No switch B *1	Common dimensions with switch A	B	C	D	LA ≤5 St	LA Over 5 st	LB ≤5 St	LB Over 5 st	Q *4	EE	F	FA *3	FB	I	J	K	KA	KK
ø12	30.5	27	35.5	32	5.5	5.5	4	0	2	0	16.5(16)	M5	25	13(16.5)	4.5	3.5	6.5 spot face depth 3.5	32	M4 depth 7	M3 depth 6
ø16	30.5	27	35.5	32	5.5	5.5	6	0	0	0	16.5	M5	29	15(18.5)	4.5	3.5	6.5 spot face depth 3.5	38	M4 depth 7	M4 depth 8
ø20	34	29.5	44	39.5	5.5	7	-	-	-	-	16.5	M5	36	18.5(22)	12.5	5.5	9 spot face depth 5.5	47	M6 depth 11	M5 depth 7
ø25	37.5	32.5	47.5	42.5	7	8.5	-	-	-	-	18	M5	40	20.5(24)	13.5	5.5	9 spot face depth 5.5	51	M6 depth 11	M6 depth 12

Code / Bore size (mm)	Common dimensions with switch M	MM	N	WF	Reed T0H/T0V, T5H/T5V HD	Reed T0H/T0V, T5H/T5V RD	Proximity T2H/T2V, T3H/T3V HD	Proximity T2H/T2V, T3H/T3V RD	Proximity T2WH/T2WV, T3WH/T3WV HD	Proximity T2WH/T2WV, T3WH/T3WV RD	Proximity F2H/F2V, F3H/F3V, F2YH/F2YV, F3YH/F3YV HD	Proximity F2H/F2V, F3H/F3V, F2YH/F2YV, F3YH/F3YV RD	Proximity F2S/F3S HD	Proximity F2S/F3S RD
ø12	5	6	15.5	3.5	4	9	4	9	6	11	-	-	-	-
ø16	6	8	20	3.5	2	11.5	2	11.5	3	13.5	-	-	-	-
ø20	8	10	25.5	4.5	6	14.5	6	14.5	8	16.5	10.5	19	9.5	18
ø25	10	12	28	5	8	16	8	16	10	18	12.5	20	11.5	19

*1 : To calculate A+ stroke or B+ stroke when using custom stroke, apply the next longer standard stroke (instead of the custom stroke) to the stroke value.
(Example) If the custom stroke is 7 mm, apply the standard stroke of 10 mm.
*2 : HD and RD dimensions for 5 mm stroke differ from these dimensions according to the setting.
*3 : Dimensions in ( ) of FA are for the L-shaped lead wire.
*4 : Dimensions in ( ) of code Q are when the value is for a 5 mm stroke without switch.
*5 : Only F-switch is available for the ø20 or ø25 piping port surface.

Code / Bore size (mm)	Proximity T2YH/T2YV T3YH/T3YV/T2JH/T2JV HD	Proximity T2YH/T2YV T3YH/T3YV/T2JH/T2JV RD	Reed T8H/T8V HD	Reed T8H/T8V RD	AC magnetic field proof T2YD/T2YDT/T1H/T1V HD	AC magnetic field proof T2YD/T2YDT/T1H/T1V RD
ø12	-	-	-	-	-	-
ø16	-	-	-	-	-	-
ø20	5	13.5	-	-	-	-
ø25	6.5	15	-	-	-	-

● Rod end male thread

Code / Bore size (mm)	a'	c'	H	kk'	M	MM	T	wf
ø12	10.5	9	8	M5	5	6	3.2	3.5
ø16	12	10	10	M6	6	8	3.6	3.5
ø20	14	12	13	M8	8	10	5	4.5
ø25	17.5	15	17	M10x1.25	10	12	6	5

Dimensions

● SSD2-L-32 to 100-P7*/P5* (with switch, TOH/V, T5H/V, T2H/V, T3H/V)

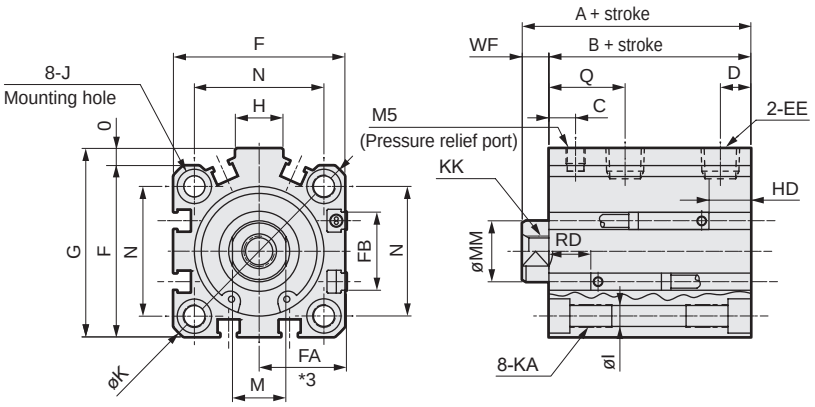

● Rod end male thread

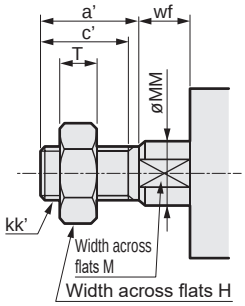

● SSD2-32 to 100-P7*/P5* (without switch)

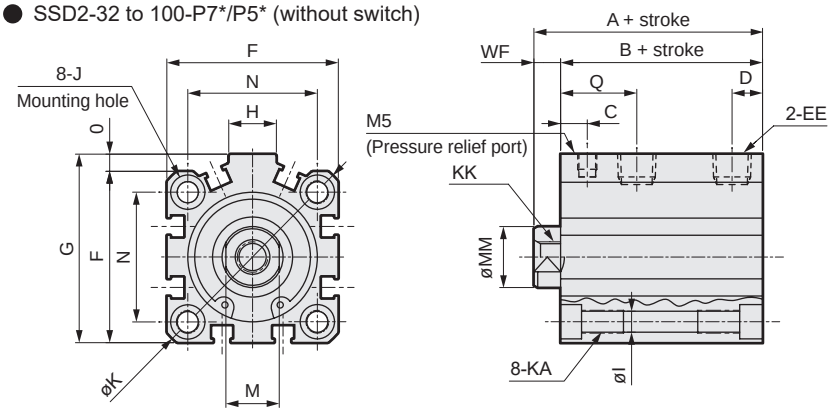

Code / Bore size (mm)	No switch		Common dimensions with switch														
	A *1, *4	B *1, *4	A *1	B *1	C	D *6	Q	EE	F	FA *3	FB	G	H	I	J	K
ø32	40(50)	33(43)	50	43	7	8(5.5)	20	Rc1/8 *5	45	23(26.5)	20.5	49.5	12.5	5.5	9 spot face depth 5.5	60
ø40	46.5(56.5)	39.5(49.5)	56.5	49.5	8.5	8	21.5	Rc1/8	52	26.5(30)	27.5	57	15	5.5	9 spot face depth 5.5	69
ø50	48.5(58.5)	40.5(50.5)	58.5	50.5	9.5	10.5(9.5)	25	Rc1/4 *5	64	32.5(36)	28.5	71	18	6.9	11 spot face depth 6.5	86
ø63	54(64)	46(56)	64	56	10	11	25.5	Rc1/4	77	39(42.5)	28.5	84	23	8.7	14 spot face depth 9	103
ø80	68.5(78.5)	58.5(68.5)	78.5	68.5	11.5	13	30	Rc3/8	98	49.5(53)	28.5	104	31	10.5	17.5 spot face depth 11	132
ø100	80(90)	68(78)	90	78	15.5	15	35	Rc3/8	117	59(62.5)	28.5	123.5	38	10.5	17.5 spot face depth 11	156

Code / Bore size (mm)	Common dimensions with switch							Reed T0H/T0V, T5H/T5V		Proximity T2H/T2V, T3H/T3V		Proximity T2WH/T2WV, T3WH/T3WV	
	KA	KK	M	MM	N	O	WF	HD	RD	HD	RD	HD	RD
ø32	M6 depth 11	M8 depth 13	14	16	34	4.5	7	4	19.5	4	19.5	6	21.5
ø40	M6 depth 11	M8 depth 13	14	16	40	5	7	7	22	7	22	8.5	23.5
ø50	M8 depth 13	M10 depth 15	17	20	50	7	8	7.5	22.5	7.5	22.5	9	24
ø63	M10 depth 25	M10 depth 15	17	20	60	7	8	12.5	23	12.5	23	14	24.5
ø80	M12 depth 28	M16 depth 21	22	25	77	6	10	17.5	25.5	17.5	25.5	19	27
ø100	M12 depth 28	M20 depth 27	27	30	94	6.5	12	23	29.5	23	29.5	24.5	31

Code / Bore size (mm)	Proximity T2YH/T2YV T3YH, T3YV/T2JH/T2JV		Reed T8H/T8V		AC magnetic field proof T2YD, T2YDT/T1H/T1V	
	HD	RD	HD	RD	HD	RD
ø32	3.5	18.5	-	-	3.5	18.5
ø40	5.5	20.5	1	16	5.5	20.5
ø50	6	21	1.5	16.5	6	21
ø63	11	21.5	6.5	17	11	21.5
ø80	16	24	11.5	19.5	16	24
ø100	21.5	28	17	23.5	21.5	28

*1 : To calculate A+ stroke or B+ stroke when using custom stroke, apply the next longer standard stroke (instead of the custom stroke) to the stroke value. (Example) If the custom stroke is 7 mm, apply the standard stroke of 10 mm.
*2 : HD and RD dimensions for 5 mm stroke differ from these dimensions according to the setting.
*3 : Dimensions in ( ) of FA are for the L-shaped lead wire.
*4 : Dimensions in ( ) of codes A and B are for strokes of more than 50 mm.
*5 : The ø32 bore size with a 5 mm stroke and without a switch has a port size of M5. The ø50 bore size with a 10 mm stroke and without a switch has a port size of Rc1/8.
*6 : Dimensions in ( ) of codes C and D are when the value is for a 5 mm stroke without switch.

● Rod end male thread

Code / Bore size (mm)	a'	c'	H	kk'	M	MM	T	wf
ø32	23.5	20.5	22	M14x1.5	14	16	8	5
ø40	23.5	20.5	22	M14x1.5	14	16	8	5
ø50	28.5	26	27	M18x1.5	17	20	11	5
ø63	28.5	26	27	M18x1.5	17	20	11	5
ø80	35.5	32.5	32	M22x1.5	22	25	13	8
ø100	35.5	32.5	41	M26x1.5	27	30	16	8

SCP*3
CMK2
CMA2
SCM
SCG
SCA2
SCS2
CKV2
CAV2/COVP/N2
SSD2
SSG
SSD
CAT
MDC2
MVC
SMG
MSD/MSDG
FC*
STK
SRL3
SRG3
SRM3
SRT3
MRL2
MRG2
SM-25
ShkAbs
FJ
FK
Spd Contr
Ending

Dimensions (ø125 to ø160)

● SSD2-L-125 to 160-P7*/P5* (with switch)

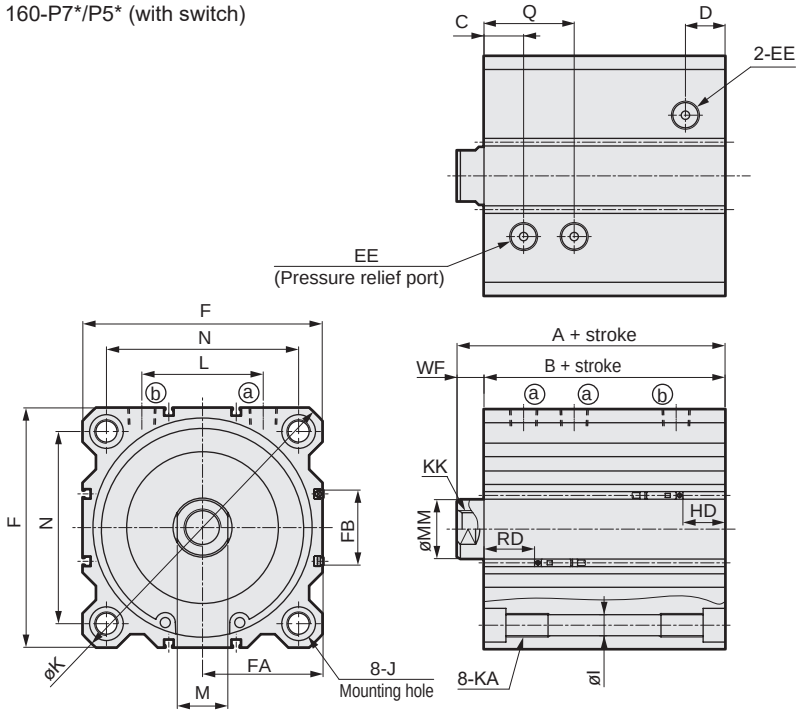

● Rod end male thread

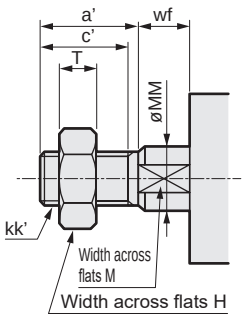

● SSD2-125 to 160-P7*/P5* (without switch)

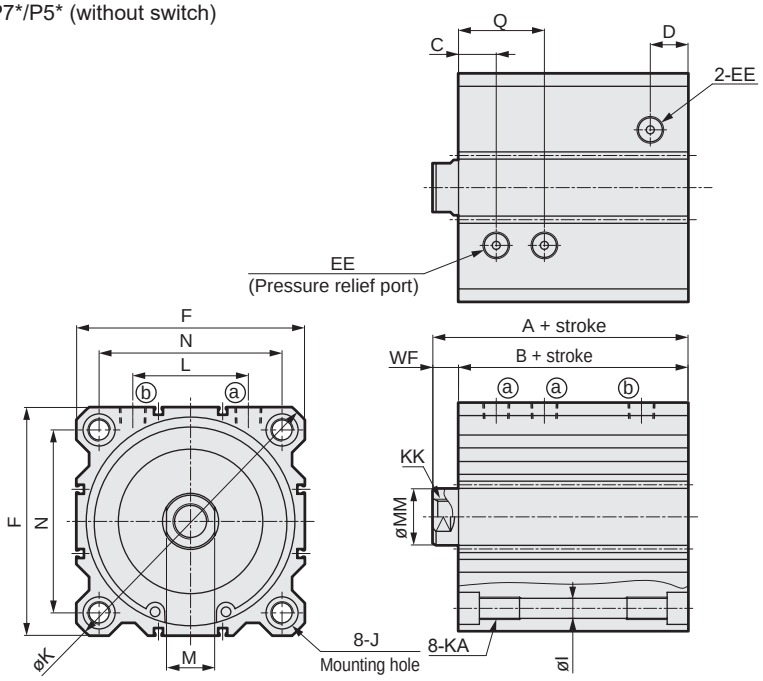

Code / Bore size (mm)	Common dimensions for types with/without switch																		
	A	B	C	D	EE	F	FA *2	FB	I	J	K	KA	KK	L	M	MM	N	Q	WF
ø125	118	102	23.5	23.5	Rc3/8	142	71.5(75)	44.5	12.5	20 spot face depth 13	190	M14 depth 25	M22 depth 30	72	30	35	114	53.5	16
ø140	128	112	27	27	Rc3/8	158	79.5(83)	44.5	12.5	20 spot face depth 13	210	M14 depth 25	M22 depth 30	80	30	35	128	57	16
ø160	143	126	30	30	Rc3/8	178	89.5(93)	48.5	14.7	23 spot face depth 15.2	238	M16 depth 28	M24 depth 33	90	36	40	144	65	17

Code / Bore size (mm)	Reed T0H/T0V, T5H/T5V		Proximity T2H/T2V, T3H/T3V		Proximity T2YH/T2YV, T3YH/T3YV	
	HD	RD	HD	RD	HD	RD
ø125	24.5	59.5	24.5	59.5	23	58
ø140	31	63	31	63	29.5	61.5
ø160	34	74	34	74	32.5	72.5

● *1 : Refer to page 1044 for HD , RD, and protruding dimensions of the 2-color LED switches.
● *2 : Dimensions in ( ) of FA are for the L-shaped lead wire.

Dimensions of rod end male thread

Code / Bore size (mm)	a'	c'	H	kk'	M	MM	T	wf
ø125	45	42	46	M30x1.5	30	35	18	13
ø140	45	42	46	M30x1.5	30	35	18	13
ø160	50	47	55	M36x1.5	36	40	21	14

MEMO

SSD2 Series common dimensions (with 2-color LED, off-delay, AC magnetic field, T1* and T8* switches)

● SSD2-L-12 to 100 (with 2-color LED, off-delay, T8* switches/T2YH/V, T3YH/V, T2JH/V, T8H/V)

· ø12/ø16

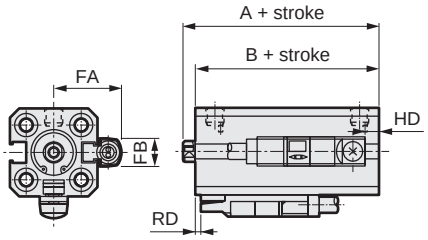

· ø20/ø25

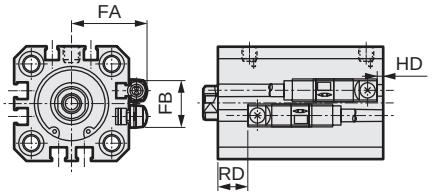

· ø32 to ø100

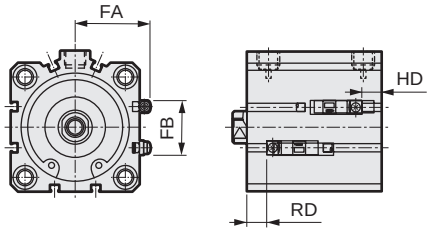

Code / Bore size (mm)	FA	FB	T2YH/V, T3YH/V, T2JH/V												T8H/V									
			SSD2-L, XL,YL		SSD2-DL *1		SSD2 (Long) -L *2		SSD2-ML		SSD2-GL		SSD2-G5L		SSD2-L, XL,YL, GL		SSD2-DL *1		SSD2-ML		SSD2 (Long) -L *2		SSD2-G5L	
			RD	HD	RD	HD	RD	HD	RD	HD	RD	HD	RD	HD	RD	HD	RD	HD	RD	HD	RD	HD	RD	HD
ø12	18.8	8	-	-	1	3.5	3	1	-	-	-	-	-	-	-	-	-	-	-	-	-	-	-	-
ø16	20.8	8	-	-	0.5	3.5	2.5	1.5	-	-	-	-	-	-	-	-	-	-	-	-	-	-	-	-
ø20	24.3	16	6.5	2	5	8	14(8.5)	5.5(11)	10	1.5	16.5	2	-	-	-	-	0.5	3.5	-	-	9.5(4)	0(6.5)	-	-
ø25	26.3	17	8.5	3	8	10	17.5(10.5)	5(12.5)	13	1.5	18.5	3	-	-	-	-	1.5	5.5	-	-	13(6)	0(8)	-	-
ø32	28.8	24	8.5	3.5	7.5	9.5	16(8)	8(14.5)	17.5	2	18.5	3.5	19.5	3.5	-	-	3	5	-	-	11.5(4)	2.5(10)	-	-
ø40	32.3	31	10.5	5.5	10.5	15	24.5(15)	8(17.5)	10.5	5.5	10.5	5.5	20.5	5.5	6	1	6	10.5	6	1	20(10.5)	3.5(13)	16	1
ø50	38.3	32	11	6	11	15	24.5(16)	8.5(17.5)	11	6	11	6	21	6	6.5	1.5	6.5	10.5	6.5	1.5	19.5(11)	4(13)	16.5	1.5
ø63	44.8	32	11.5	11	11.5	16.5	18.5(13.5)	16(21.5)	11.5	11	11.5	11	21.5	11	7	6.5	7	12	7	6.5	13.5(8.5)	11.5(17)	17	6.5
ø80	55.3	32	14	16	14	21.5	22.5(17.5)	20.5(26.5)	-	-	14	16	28	16	9.5	11.5	9.5	17	-	-	17.5(12.5)	16(22)	23.5	11.5
ø100	64.8	32	18	21.5	18	27	26.5(21.5)	26.5(32)	-	-	18	21.5	33.5	21.5	13.5	17	13.5	22.5	-	-	21.5(16.5)	22(27.5)	29	17

● SSD2-L-12 to 100 (for AC magnetic field, with T1* switch, T2YD, T2YDT, T1H/V)

· ø12/ø16

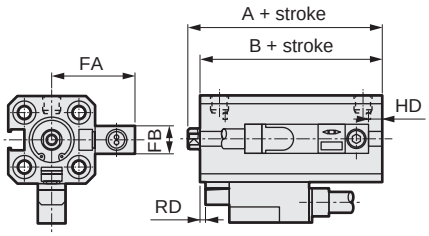

· ø20/ø25

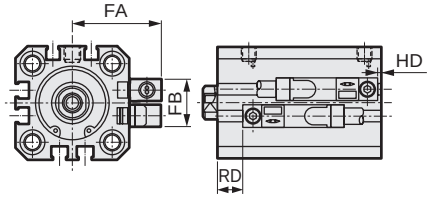

· ø32 to ø100

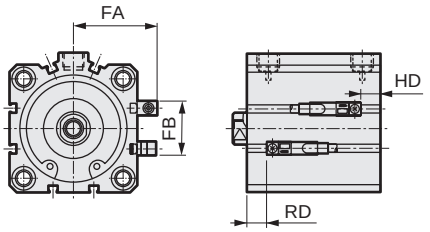

Code / Bore size (mm)	FA	FB	SSD2-L, XL,YL		SSD2-DL *1		SSD2 (Long stroke) -L *2		SSD2-ML		SSD2-GL		SSD2-G5L	
			RD	HD	RD	HD	RD	HD	RD	HD	RD	HD	RD	HD
ø12	23.8	8	-	-	1.5	4	3	1	-	-	-	-	-	-
ø16	25.8	8	-	-	0.5	3.5	2.5	1.5	-	-	-	-	-	-
ø20	29.3	16	6.5	2	5	8	14(8.5)	5.5(11)	10	1.5	16.5	2	-	-
ø25	31.3	17	8.5	3	8	10	17.5(10.5)	5(12.5)	13	1.5	18.5	3	-	-
ø32	33.8	24	8.5	3.5	7.5	9.5	16(8)	8(14.5)	17.5	2	18.5	3.5	19.5	3.5
ø40	37.3	31	10.5	5.5	10.5	15	24.5(15)	8(17.5)	10.5	5.5	10.5	5.5	20.5	5.5
ø50	43.3	32	11	6	11	15	24.5(16)	8.5(17.5)	11	6	11	6	21	6
ø63	49.8	32	11.5	11	11.5	16.5	18.5(13.5)	16(21.5)	11.5	11	11.5	11	21.5	11
ø80	60.3	32	14	16	14	21.5	22.5(17.5)	20.5(26.5)	-	-	14	16	28	16
ø100	69.8	32	18	21.5	18	27	26.5(21.5)	26.5(32)	-	-	18	21.5	33.5	21.5

*1: The port surface with the mark is the “RD side”.
*2: Dimensions in ( ) are for stroke over 100 for ø20, stroke over 150 for ø25 to ø50, and stroke over 200 for ø63 to ø100.

SSD2-K Series common dimensions (with 2-color LED, off-delay, AC magnetic field, T1* and T8* switches)

● SSD2-KL-20 to 100 (with 2-color LED, off-delay, T8* switches/T2YH/V, T3YH/V, T2JH/V, T8H/V)

· ø20/ø25

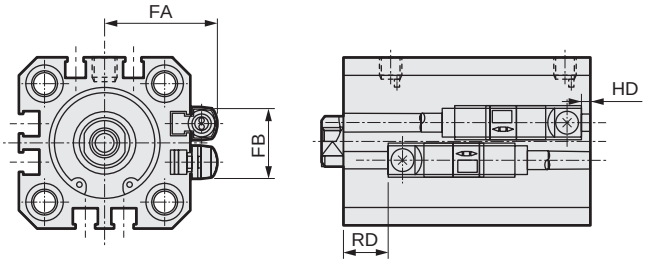

· ø32 to ø100

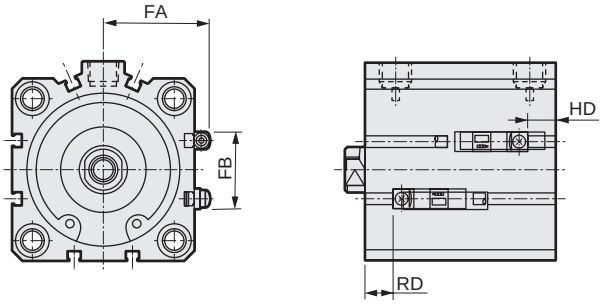

Code / Bore size (mm)	FA	FB	T2YH/V, T3YH/V, T2JH/V		T8H/V	
			RD	HD	RD	HD
ø20	24.3	16	8	5.5	-	-
ø25	26.3	17	11.5	5	-	-
ø32	28.8	24	14	8	-	-
ø40	32.3	31	18	8	13.5	3.5
ø50	38.3	32	18.5	8.5	14	4
ø63	44.8	32	16.5	16	12	11.5
ø80	55.3	32	19	20.5	14.5	16
ø100	64.8	32	23	26.5	18.5	22

● SSD2-KL-20 to 100 (for AC magnetic field, with T1* switch, T2YD, T2YDT, T1H/V)

· ø20/ø25

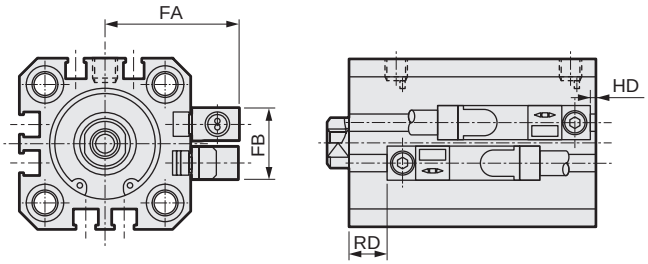

· ø32 to ø100

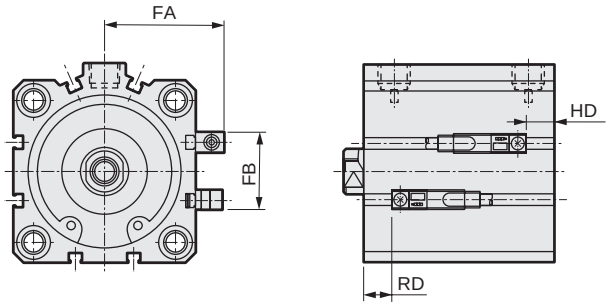

Code / Bore size (mm)	FA	FB	RD	HD
ø20	29.3	16	8	5.5
ø25	31.3	17	11.5	5
ø32	33.8	24	14	8
ø40	37.3	31	18	8
ø50	43.3	32	18.5	8.5
ø63	49.8	32	16.5	16
ø80	60.3	32	19	20.5
ø100	60.8	32	23	26.5

SCP*3
CMK2
CMA2
SCM
SCG
SCA2
SCS2
CKV2
CAV2/ COVP/N2
SSD2
SSG
SSD
CAT
MDC2
MVC
SMG
MSD/ MSDG
FC*
STK
SRL3
SRG3
SRM3
SRT3
MRL2
MRG2
SM-25
ShkAbs
FJ
FK
Spd Contr
Ending

Dimensions (Mounting bracket: LB)

● Axial foot (LB)

· ø12 to ø25

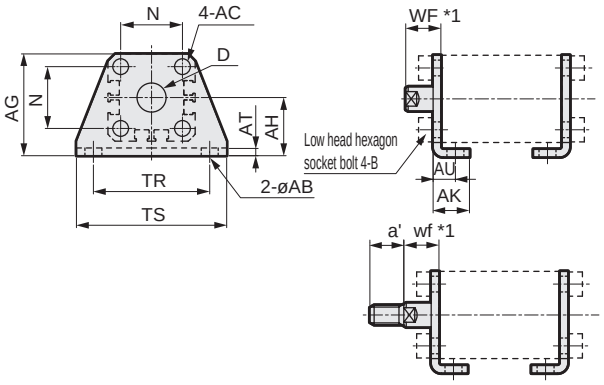

· ø32 to ø100

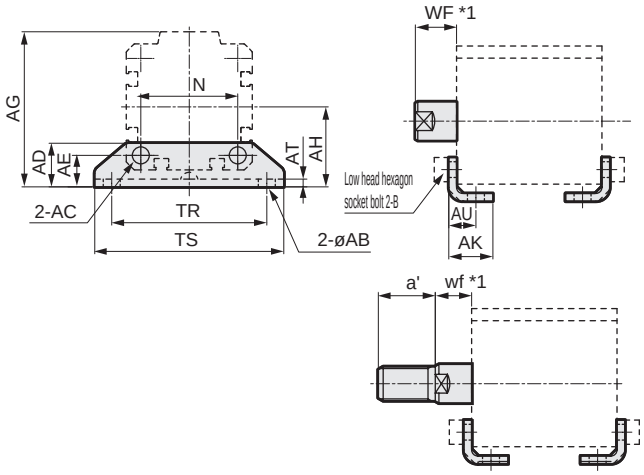

Material: Steel
Zinc chromate treatment

*1: Hex socket mounting bolts are included.

Model No.	Bore size	AB	AC	AD	AE	AG	AH	AK	AT	AU	B	D	N	TR	TS	WF	wf	a'	Weight (g)
SSD2-LB-12	ø12	5	4.5	-	-	29.5	17	12.5	2	8	M4x10	8	15.5	34	44	13.5	13.5	10.5	51
SSD2-LB-16	ø16	5	4.5	-	-	33.5	19	13	2	8	M4x10	10	20	38	48	13.5	13.5	12	61
SSD2-LB-20	ø20	7	6.5	-	-	42	24	15	3.2	9.2	M6x16	12	25.5	48	62	14.5	14.5	14	161
SSD2-LB-25	ø25	7	6.5	-	-	46	26	16.5	3.2	10.7	M6x16	14	28	52	66	15	15	17.5	176
SSD2-LB-32	ø32	7	7	18.5	13	57	30	17	3.2	11.2	M6x16	-	34	57	71	17	15	23.5	107
SSD2-LB-40	ø40	7	7	18	13	64	33	18.2	3.2	11.2	M6x16	-	40	64	78	17	15	23.5	121
SSD2-LB-50	ø50	9	9	22	14	78	39	22.7	3.2	14.7	M8x20	-	50	79	95	18	15	28.5	201
SSD2-LB-63	ø63	11	11	26	16	91.5	46	25.2	3.2	16.2	M10x25	-	60	95	113	18	15	28.5	314
SSD2-LB-80	ø80	13	13	31.5	20.5	114	59	30.5	4.5	19.5	M12x40	-	77	118	140	20	18	35.5	678
SSD2-LB-100	ø100	13	13	35	24	136	71	35.5	6	23	M12x40	-	94	137	162	22	18	35.5	1198

*1: The WF/wf dimension of the cylinder for LB is set 10 mm longer than that of standard products. Contact CKD for the cylinder model No. when ordering individual cylinders and LB brackets.

*2: The mounting brackets for SSD2 are the same dimensions as the compact mounting brackets for SSD.
Check the General Catalog (CB-029SA) in order to avoid mistakes.
(Example: SSD2-LB-32 is the same dimensions as SSD-LB2-32.)

Dimensions (Mounting bracket: FA, FB)

● Rod side flange (FA)

Material: Steel
Zinc chromate treatment

· ø12 to ø25

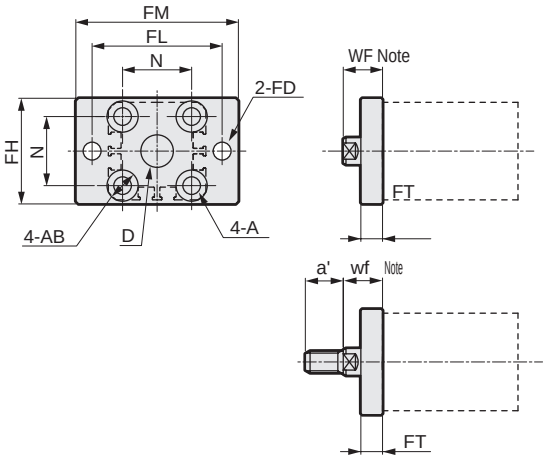

· ø32 to ø100

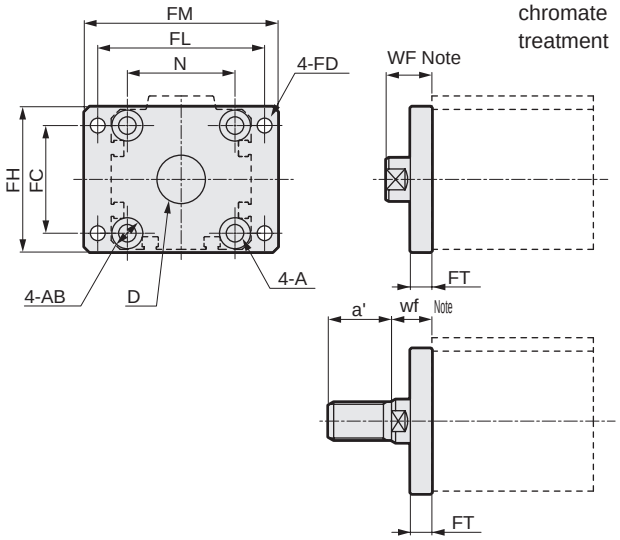

*1: Mounting bolts are included.

Model No.	Bore size	FC	FD	FH	FL	FM	FT	A	AB	D	N	WF	wf	a'	Weight (g)
SSD2-FA-12	ø12	-	4.5	25	45	55	5.5	4.5	8.5 spot face depth 2.7	8	15.5	13.5	13.5	10.5	54
SSD2-FA-16	ø16	-	4.5	30	45	55	5.5	4.5	8.5 spot face depth 2.7	10	20	13.5	13.5	12	64
SSD2-FA-20	ø20	-	6.6	39	48	60	8	6.5	11.5 spot face depth 3.8	12	25.5	14.5	14.5	14	129
SSD2-FA-25	ø25	-	6.6	42	52	64	8	6.5	11.5 spot face depth 3.8	14	28	15	15	17.5	148
SSD2-FA-32	ø32	34	5.5	48	56	65	8	6.5	11.5 spot face depth 3.8	22	34	17	15	23.5	167
SSD2-FA-40	ø40	40	5.5	54	62	72	8	6.5	11.5 spot face depth 3.8	28	40	17	15	23.5	215
SSD2-FA-50	ø50	50	6.6	67	76	89	9	9	15 spot face depth 5	35	50	18	15	28.5	387
SSD2-FA-63	ø63	60	9	80	92	108	9	11	18 spot face depth 6	35	60	18	15	28.5	573
SSD2-FA-80	ø80	77	11	99	116	134	11	13	19 spot face depth 7.5	43	77	20	18	35.5	1132
SSD2-FA-100	ø100	94	11	117	136	154	11	13	19 spot face depth 7.5	59	94	22	18	35.5	1522

Note: The WF/wf dimension of the cylinder for FA is set 10 mm longer than that of standard products. Contact CKD for the cylinder model No. when ordering individual cylinders and FA brackets.

● Head side flange (FB)

Material: Steel, Zinc chromate treatment

· ø12 to ø25

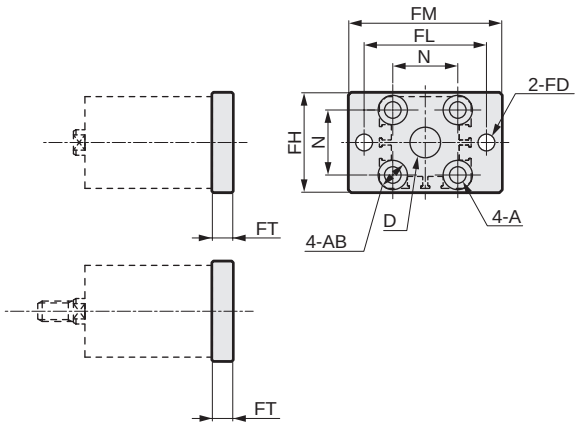

· ø32 to ø100

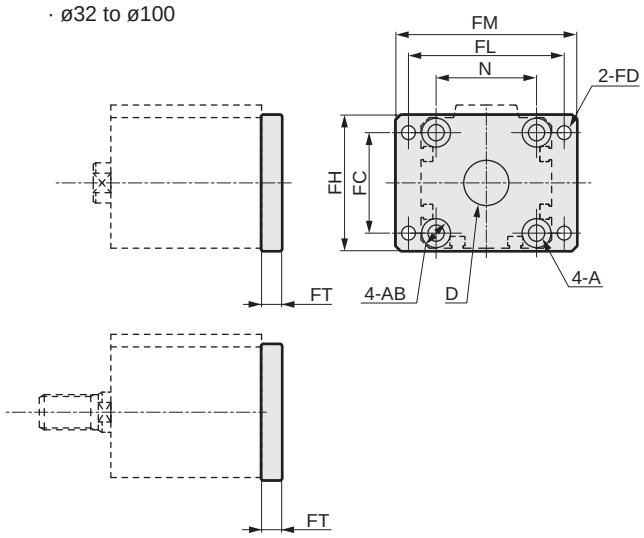

*1: Mounting bolts are included.

Model No.	Bore size	FC	FD	FH	FL	FM	FT	A	AB	D	N	Weight (g)
SSD2-FB-12	ø12	-	4.5	25	45	55	5.5	4.5	8.5 spot face depth 2.7	8	15.5	54
SSD2-FB-16	ø16	-	4.5	30	45	55	5.5	4.5	8.5 spot face depth 2.7	10	20	64
SSD2-FB-20	ø20	-	6.6	39	48	60	8	6.5	11.5 spot face depth 3.8	12	25.5	129
SSD2-FB-25	ø25	-	6.6	42	52	64	8	6.5	11.5 spot face depth 3.8	14	28	148
SSD2-FB-32	ø32	34	5.5	48	56	65	8	6.5	11.5 spot face depth 3.8	22	34	167
SSD2-FB-40	ø40	40	5.5	54	62	72	8	6.5	11.5 spot face depth 3.8	28	40	215
SSD2-FB-50	ø50	50	6.6	67	76	89	9	9	15 spot face depth 5	35	50	387
SSD2-FB-63	ø63	60	9	80	92	108	9	11	18 spot face depth 6	35	60	573
SSD2-FB-80	ø80	77	11	99	116	134	11	13	19 spot face depth 7.5	43	77	1132
SSD2-FB-100	ø100	94	11	117	136	154	11	13	19 spot face depth 7.5	59	94	1522

Dimensions (Mounting bracket: CB)

● Clevis bracket (CB)

Material: Cast iron
Painted

· ø12 to ø25

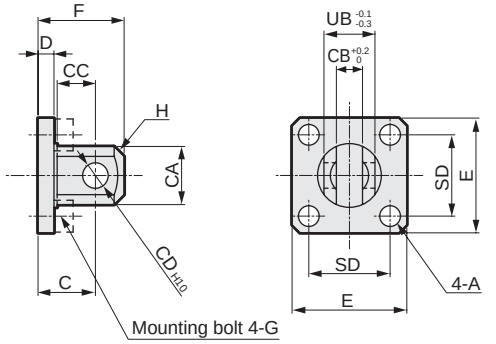

· ø32 to ø100

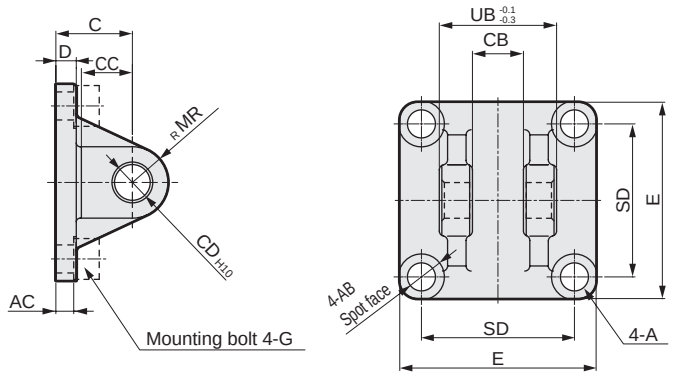

*1:Hex socket mounting bolts, pins, and snap rings are included.

Model No.	Bore size	A	AB	AC	C	CA	CB	CC	CD	D	E	F	G	H	MR	SD	UB	Weight (g)
SSD2-CB-12	ø12	4.5	-	-	14	12	$5.2^{+0.2}_{0}$	7	5	4	25	20	M4x12	C1.5	-	15.5	10	28
SSD2-CB-16	ø16	4.5	-	-	15	15	$6.6^{+0.3}_{0}$	8	5	5	29	21	M4x12	C2	-	20	12	43
SSD2-CB-20	ø20	6.5	-	-	18	20	$8.2^{+0.2}_{0}$	12	8	5	36	27	M6x16	C4	-	25.5	16	84
SSD2-CB-25	ø25	6.5	-	-	20	24	$10.2^{+0.2}_{0}$	14	10	5	40	30	M6x16	C5	-	28	20	110
SSD2-CB-32	ø32	6.6	13	4.5	20	-	$18.2^{+0.2}_{0}$	14	10	5	45	30	M6x16	-	10	34	36	159
SSD2-CB-40	ø40	6.6	14	5	22	-	$18.2^{+0.2}_{0}$	14	10	6	52	32	M6x16	-	10	40	36	207
SSD2-CB-50	ø50	9	16	6	28	-	$22.2^{+0.2}_{0}$	20	14	7	64	42	M8x20	-	14	50	44	420
SSD2-CB-63	ø63	11	18	7	30	-	$22.2^{+0.2}_{0}$	20	14	8	77	44	M10x25	-	14	60	44	605
SSD2-CB-80	ø80	13.5	23	9	38	-	$28.2^{+0.2}_{0}$	27	18	10	98	56	M12x40	-	18	77	56	1222
SSD2-CB-100	ø100	13.5	20	12	45	-	$32.2^{+0.2}_{0}$	31	22	13	117	67	M12x40	-	22	94	64	2031

*1: The mounting brackets for SSD2 are the same dimensions as the compact mounting brackets for SSD.
Check the General Catalog (CB-029SA) in order to avoid mistakes.
(Example: SSD2-CB-32 is the same dimensions as SSD-CB2-32.)

● Clevis bracket (CB) included pin dimensions table (P)

Material: Steel
Zinc
chromate
treatment

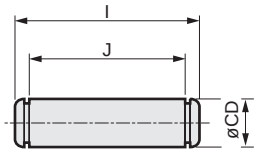

Model No.	Applicable bore size	I	J	CD	Applicable snap ring	Weight (g)
SSD2-P-12	ø12	15.2	10.2	$5^{-0.01}_{-0.028}$	E type 4	2.4
SSD2-P-16	ø16	18	13	$5^{-0.01}_{-0.028}$	E type 4	2.8
SSD2-P-20	ø20	21	16.2	$8^{-0.025}_{-0.047}$	C type for shaft 8	8.2
SSD2-P-25	ø25	25.6	20.2	$10^{-0.025}_{-0.047}$	C type for shaft 10	16
SSD2-P-32	ø32/ø40	41.6	36.2	$10^{-0.025}_{-0.047}$	C type for shaft 10	25
SSD2-P-50	ø50/ø63	50.6	44.2	$14^{-0.032}_{-0.059}$	C type for shaft 14	60
SSD2-P-80	ø80	64	56.2	$18^{-0.032}_{-0.059}$	C type for shaft 18	124
SSD2-P-100	ø100	72	64.2	$22^{-0.040}_{-0.083}$	C type for shaft 22	213

Dimensions (Accessory: I, Y)

● Rod eye (I)
· ø12 to ø25

Material: Steel
Zinc chromate treatment

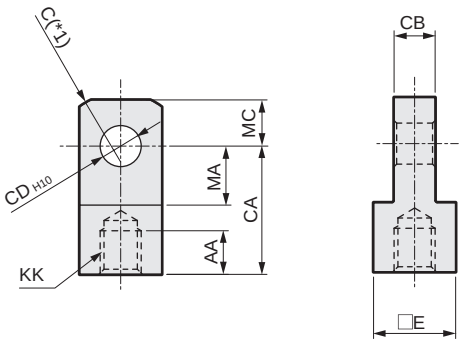

· ø32 to ø100

Material: Cast iron
Painted

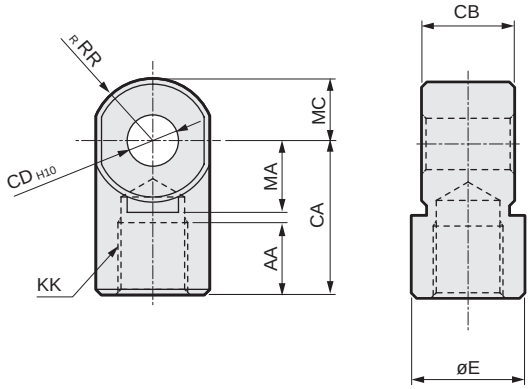

*1: ø20/25 are SR RR

Model No.	Bore size	AA	CA	CB	CD	E	KK	MA	C	RR	MC	Weight (g)
SSD2-I-12	ø12	6	16	$5^{-0.2}_{-0.4}$	5	□10	M5x0.8	7	2	-	5.5	9
SSD2-I-16	ø16	8	25	$6.5^{-0.2}_{-0.4}$	5	□12	M6x1	14	2	-	7	21
SSD2-I-20	ø20	8.5	25	$8^{-0.2}_{-0.4}$	8	□16	M8x1.25	11.5	-	13.4	9	38
SSD2-I-25	ø25	10.5	30	$10^{-0.2}_{-0.4}$	10	□20	M10x1.25	14	-	17.1	11	71
SSD2-I-32	ø32/ø40	14	30	$18^{-0.3}_{-0.5}$	10	ø22	M14x1.5	14	-	12	12	74
SSD2-I-50	ø50/ø63	18	40	$22^{-0.3}_{-0.5}$	14	ø28	M18x1.5	20	-	16	16	155
SSD2-I-80	ø80	21	50	$28^{-0.3}_{-0.5}$	18	ø38	M22x1.5	27	-	21	21	380
SSD2-I-100	ø100	21	55	$32^{-0.3}_{-0.5}$	22	ø44	M26x1.5	31	-	24	24	550

*1: The accessories for SSD2 are the same dimensions as the compact accessories for SSD.
Check the General Catalog (CB-029SA) in order to avoid mistakes.
(Example: SSD2-I-32 is the same dimensions as SSD-I2-32.)

● Rod clevis (Y)
· ø12 to ø25

Material: Steel
Zinc chromate treatment

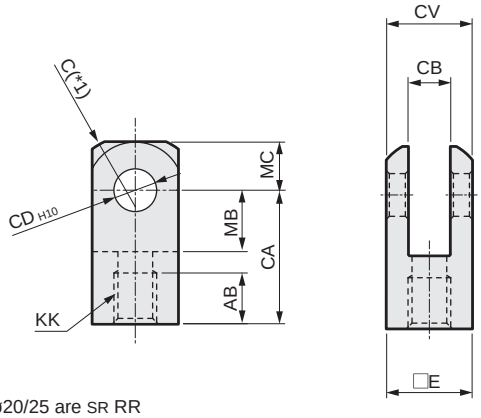

· ø32 to ø100

Material: Cast iron
Painted

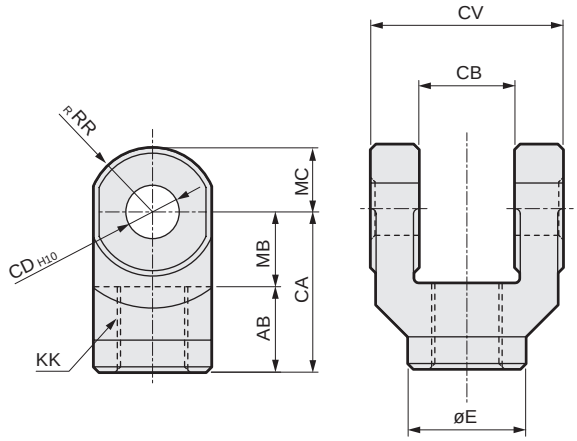

*1: ø20/25 are SR RR
*2: A pin (including C-ring) is included.
*3: The pins for the rod clevis are common with the pins for the clevis brackets.

Model No.	Bore size	AB	CA	CB	CD	CV	E	KK	MB	C	RR	MC	Weight (g)
SSD2-Y-12	ø12	6	16	$5^{+0.4}_{+0.2}$	5	10	□10	M5x0.8	7	2	-	5.5	12
SSD2-Y-16	ø16	11	21	$6.5^{+0.4}_{+0.2}$	5	12	□12	M6x1	10	2	-	7	20
SSD2-Y-20	ø20	13.5	25	$8^{+0.4}_{+0.2}$	8	16	□16	M8x1.25	11.5	-	13.4	9	45
SSD2-Y-25	ø25	16	30	$10^{+0.4}_{+0.2}$	10	20	□20	M10x1.25	14	-	17.1	11	84
SSD2-Y-32	ø32/ø40	16	30	$18^{+0.5}_{+0.3}$	10	36	ø22	M14x1.5	14	-	12	12	120
SSD2-Y-50	ø50/ø63	20	40	$22^{+0.5}_{+0.3}$	14	44	ø28	M18x1.5	20	-	16	16	257
SSD2-Y-80	ø80	23	50	$28^{+0.5}_{+0.3}$	18	56	ø38	M22x1.5	27	-	21	21	589
SSD2-Y-100	ø100	24	55	$32^{+0.5}_{+0.3}$	22	64	ø44	M26x1.5	31	-	24	24	933

*1: The accessories for SSD2 are the same dimensions as the compact accessories for SSD.
Check the General Catalog (CB-029SA) in order to avoid mistakes.
(Example: SSD2-Y-32 is the same dimensions as SSD-Y2-32.)

How to order mounting bolts

SSD2 - BOLT - dxL

Mounting bolts (Bolts are available in units of 4 bolts per set.)

How to read the list

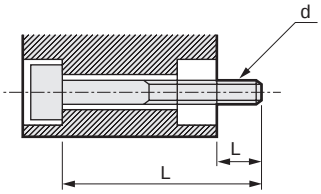

Material: Steel
Treatment: Black finish

d: Mounting bolt screw diameter
L: Mounting bolt length
L : Mating side screw-in available length
(Note) The mounting bolts will be displayed as d x L.

● SSD2, SSD2-K(ø12 to ø100)

Bore size	Stroke	L	dxL			
			SSD2	SSD2-L	SSD2-K	SSD2-KL
ø12 ø16	5	6.5	M3x25	M3x30	M3x30	M3x35
	10		x30	x35	x35	x40
	15		x35	x40	x40	x45
	20		x40	x45	x45	x50
	25		x45	x50	x50	x55
	30		x50	x55	x55	x60
ø20	5	6	M5x25	M5x35	M5x30	M5x40
	10		x30	x40	x35	x45
	15		x35	x45	x40	x50
	20		x40	x50	x45	x55
	25		x45	x55	x50	x60
	30		x50	x60	x55	x65
	35		x55	x65	x60	x70
	40		x60	x70	x65	x75
	45		x65	x75	x70	x80
	50		x70	x80	x75	x85
ø25	5	8	M5x30	M5x40	M5x35	M5x45
	10		x35	x45	x40	x50
	15		x40	x50	x45	x55
	20		x45	x55	x50	x60
	25		x50	x60	x55	x65
	30		x55	x65	x60	x70
	35		x60	x70	x65	x75
	40		x65	x75	x70	x80
	45		x70	x80	x75	x85
	50		x75	x85	x80	x90
ø32	5	7.5 (12.5)	M5x30	M5x40	M5x45	M5x55
	10		x35	x45	x50	x60
	15		x40	x50	x55	x65
	20		x45	x55	x60	x70
	25		x50	x60	x65	x75
	30		x55	x65	x70	x80
	35		x60	x70	x75	x85
	40		x65	x75	x80	x90
	45		x70	x80	x85	x95
	50		x75	x85	x90	x100
	75		x110	x110	x125	x125
	100		x135	x135	x150	x150
ø40	5	6	M5x35	M5x45	M5x45	M5x55
	10		x40	x50	x50	x60
	15		x45	x55	x55	x65
	20		x50	x60	x60	x70
	25		x55	x65	x65	x75
	30		x60	x70	x70	x80
	35		x65	x75	x75	x85
	40		x70	x80	x80	x90
	45		x75	x85	x85	x95
	50		x80	x90	x90	x100
	75		x115	x115	x125	x125
	100		x140	x140	x150	x150

Bore size	Stroke	L	dxL			
			SSD2	SSD2-L	SSD2-K	SSD2-KL
ø50	10	11	M6x45	M6x55	M6x55	M6x65
	15		x50	x60	x60	x70
	20		x55	x65	x65	x75
	25		x60	x70	x70	x80
	30		x65	x75	x75	x85
	35		x70	x80	x80	x90
	40		x75	x85	x85	x95
	45		x80	x90	x90	x100
	50		x85	x95	x95	x105
	75		x120	x120	x130	x130
	100		x145	x145	x155	x155
ø63	10	13	M8x50	M8x60	M8x60	M8x70
	15		x55	x65	x65	x75
	20		x60	x70	x70	x80
	25		x65	x75	x75	x85
	30		x70	x80	x80	x90
	35		x75	x85	x85	x95
	40		x80	x90	x90	x100
	45		x85	x95	x95	x105
	50		x90	x100	x100	x110
	75		x125	x125	x135	x135
	100		x150	x150	x160	x160
ø80	10	17.5	M10x60	M10x70	M10x70	M10x80
	15		x65	x75	x75	x85
	20		x70	x80	x80	x90
	25		x75	x85	x85	x95
	30		x80	x90	x90	x100
	35		x85	x95	x95	x105
	40		x90	x100	x100	x110
	45		x95	x105	x105	x115
	50		x100	x110	x110	x120
	75		x135	x135	x145	x145
	100		x160	x160	x170	x170
ø100	10	18	M10x70	M10x80	M10x80	M10x90
	15		x75	x85	x85	x95
	20		x80	x90	x90	x100
	25		x85	x95	x95	x105
	30		x90	x100	x100	x110
	35		x95	x105	x105	x115
	40		x100	x110	x110	x120
	45		x105	x115	x115	x125
	50		x110	x120	x120	x130
	75		x145	x145	x155	x155
	100		x170	x170	x180	x180

* Values in ( ) are for the high load (SSD2-K/KL).

● SSD2(ø125 to ø200)

Bore size	Stroke	L	dxL	
			SSD2	SSD2-L
ø125 ø140	10	20	M12x100	M12x100
	20		x110	x110
	30		x120	x120
	40		x130	x130
	50		x140	x140
	75		x165	x165
	100		x190	x190
ø160	10	24.2	M14x110	M14x110
	20		x120	x120
	30		x130	x130
	40		x140	x140
	50		x150	x150
	75		x175	x175
	100		x200	x200
ø180	10	36	M18x125	M18x125
	20		x135	x135
	30		x145	x145
	40		x155	x155
	50		x165	x165
	75		x190	x190
	100		x215	x215
ø200	10	39	M18x135	M18x135
	20		x145	x145
	30		x155	x155
	40		x165	x165
	50		x175	x175
	75		x200	x200
	100		x225	x225

● SSD2-X, SSD2-Y, SSD2-M

Bore size	Stroke	L	dxL			
			SSD2-X,Y	SSD2-XL,YL	SSD2-M	SSD2-ML
ø12 ø16	5	6.5	M3x25	M3x30	M3x30	M3x35
	10		x30	x35	x35	x40
	15				x40	x45
	20				x45	x50
	25				x50	x55
	30				x55	x60
ø20	5	6	M5x25	M5x35	M5x30	M5x40
	10		x30	x40	x35	x45
	15				x40	x50
	20				x45	x55
	25				x50	x60
	30				x55	x65
	35				x60	x70
	40				x65	x75
	45				x70	x80
	50				x75	x85
ø25	5	8	M5x30	M5x40	M5x35	M5x45
	10		x35	x45	x40	x50
	15				x45	x55
	20				x50	x60
	25				x55	x65
	30				x60	x70
	35				x65	x75
	40				x70	x80
	45				x75	x85
	50				x80	x90
ø32	5	8.5	M5x30	M5x40	M5x40	M5x50
	10		x35	x45	x45	x55
	15				x50	x60
	20				x55	x65
	25				x60	x70
	30				x65	x75
	35				x70	x80
	40				x75	x85
	45				x80	x90
	50				x85	x95
	75				x120	x120
	100				x145	x145
ø40	5	6	M5x35	M5x45	M5x35	M5x45
	10		x40	x50	x40	x50
	15				x45	x55
	20				x50	x60
	25				x55	x65
	30				x60	x70
	35				x65	x75
	40				x70	x80
	45				x75	x85
	50				x80	x90
	75				x115	x115
	100				x140	x140
ø50	10	11	M6x45	M6x55	M6x45	M6x55
	15				x50	x60
	20		x55	x65	x55	x65
	25				x60	x70
	30				x65	x75
	35				x70	x80
	40				x75	x85
	45				x80	x90
	50				x85	x95
	75				x120	x120
	100				x145	x145
ø63	10	13			M8x50	M8x60
	15				x55	x65
	20				x60	x70
	25				x65	x75
	30				x70	x80
	35				x75	x85
	40				x80	x90
	45				x85	x95
	50				x90	x100
	75				x125	x125
	100				x150	x150

SCP*3
CMK2
CMA2
SCM
SCG
SCA2
SCS2
CKV2
CAV2/COVP/N2
SSD2
SSG
SSD
CAT
MDC2
MVC
SMG
MSD/MSDG
FC*
STK
SRL3
SRG3
SRM3
SRT3
MRL2
MRG2
SM-25
ShkAbs
FJ
FK
Spd Contr
Ending

● SSD2-D, SSD2-Q

Bore size	Stroke	L	dxL			
			SSD2-D	SSD2-DL	SSD2-Q(L)-R	SSD2-Q(L)-H
ø12 ø16	5	6.5	M3x30	M3x35		
	10		x35	x40		
	15		x40	x45		
	20		x45	x50		
	25		x50	x55		
	30		x55	x60		
ø20	5	9.5 (11.5) [12]	M5x35	M5x45		
	10		x40	x50	M5x70	M5x80
	15		x45	x55	x75	x85
	20		x50	x60	x80	x90
	25		x55	x65	x85	x100
	30		x60	x70		
	35		x65	x75		
	40		x70	x80		
	45		x75	x85		
	50		x80	x90	x130	x130
	75				x155	x155
	100				x180	x180
ø25	5	11.5 (10.5) [9]	M5x40	M5x50		
	10		x45	x55	M5x70	M5x75
	15		x50	x60	x75	x80
	20		x55	x65	x80	x85
	25		x60	x70	x85	x90
	30		x65	x75		
	35		x70	x80		
	40		x75	x85		
	45		x80	x90		
	50		x85	x95	x120	x120
	75				x145	x145
	100				x170	x170
ø32	5	10 (12.5) [15]	M5x40	M5x50		
	10		x45	x55	M5x75	M5x85
	15		x50	x60	x80	x90
	20		x55	x65	x85	x95
	25		x60	x70	x90	x100
	30		x65	x75		
	35		x70	x80		
	40		x75	x85		
	45		x80	x90		
	50		x85	x95	x115	x125
	75		x120	x120	x140	x150
	100		x145	x145	x165	x175
ø40	5	10.5 (11.5) [11]	M5x50	M5x60		
	10		x55	x65	M5x80	M5x90
	15		x60	x70	x85	x95
	20		x65	x75	x90	x100
	25		x70	x80	x95	x105
	30		x75	x85		
	35		x80	x90		
	40		x85	x95		
	45		x90	x100		
	50		x95	x105	x120	x130
	75		x130	x130	x145	x155
	100		x155	x155	x170	x175
ø50	10	11	M6x55	M6x65	M6x80	M6x90
	15		x60	x70	x85	x95
	20		x65	x75	x90	x100
	25		x70	x80	x95	x105
	30		x75	x85		
	35		x80	x90		
	40		x85	x95		
	45		x90	x100		
	50		x95	x105	x120	x130
	75		x130	x130	x145	x155
	100		x155	x155	x170	x175

Bore size	Stroke	L	dxL			
			SSD2-D	SSD2-DL	SSD2-Q(L)-R	SSD2-Q(L)-H
ø63	10	12 (18) [17]	M8x50	M8x60	M8x90	M8x95
	15		x55	x65	x95	x100
	20		x60	x70	x100	x105
	25		x65	x75	x105	x110
	30		x70	x80		
	35		x75	x85		
	40		x80	x90		
	45		x85	x95		
	50		x90	x100	x130	x135
	75		x125	x125	x155	x160
	100		x150	x150	x180	x185
ø80	10	16 (12.5) [15]	M10x65	M10x75		
	15		x70	x80		
	20		x75	x85		
	25		x80	x90	M10x130	M10x125
	30		x85	x95		
	35		x90	x100		
	40		x95	x105		
	45		x100	x110		
	50		x105	x115	x155	x150
	75		x140	x140	x180	x180
	100		x165	x165	x205	x205
ø100	10	16.5 (13) [15.5]	M10x75	M10x85		
	15		x80	x90		
	20		x85	x95		
	25		x90	x100	M10x140	M10x135
	30		x95	x105		
	35		x100	x110		
	40		x105	x115		
	45		x110	x120		
	50		x115	x125	x165	x160
	75		x150	x150	x190	x190
	100		x175	x175	x215	x215
ø125 ø140	10	20	M12x100	M12x100		
	20		x110	x110		
	30		x120	x120		
	40		x130	x130		
	50		x140	x140		
	75		x165	x165		
	100		x190	x190		
ø160	10	24.2	M14x110	M14x110		
	20		x120	x120		
	30		x130	x130		
	40		x140	x140		
	50		x150	x150		
	75		x175	x175		
	100		x200	x200		
ø180	10	36	M18x125	M18x125		
	20		x135	x135		
	30		x145	x145		
	40		x155	x155		
	50		x165	x165		
	75		x190	x190		
	100		x215	x215		
ø200	10	39	M18x135	M18x135		
	20		x145	x145		
	30		x155	x155		
	40		x165	x165		
	50		x175	x175		
	75		x200	x200		
	100		x225	x225		

* Values in ( ) are for SSD2-Q(L)-R.
* Values in [ ] are for SSD2-Q(L)-H.

● SSD2-G1, 4

Bore size	Stroke	L	dxL	
			SSD2-G1, 4	SSD2-G1, 4L
ø32	5	7.5	M5x30	M5x40
	10		x35	x45
	15		x40	x50
	20		x45	x55
	25		x50	x60
	30		x55	x65
	35		x60	x70
	40		x65	x75
	45		x70	x80
	50		x75	x85
	75		x110	x120
	100		x135	x145
ø40	5	6	M5x35	M5x45
	10		x40	x50
	15		x45	x55
	20		x50	x60
	25		x55	x65
	30		x60	x70
	35		x65	x75
	40		x70	x80
	45		x75	x85
	50		x80	x90
	75		x115	x125
	100		x140	x150
ø50	10	11	M6x45	M6x55
	15		x50	x60
	20		x55	x65
	25		x60	x70
	30		x65	x75
	35		x70	x80
	40		x75	x85
	45		x80	x90
	50		x85	x95
	75		x120	x130
	100		x145	x155
ø63	10	13	M8x50	M8x60
	15		x55	x65
	20		x60	x70
	25		x65	x75
	30		x70	x80
	35		x75	x85
	40		x80	x90
	45		x85	x95
	50		x90	x100
	75		x125	x135
	100		x150	x160
ø80	10	17.5	M10x60	M10x70
	15		x65	x75
	20		x70	x80
	25		x75	x85
	30		x80	x90
	35		x85	x95
	40		x90	x100
	45		x95	x105
	50		x100	x110
	75		x135	x145
	100		x160	x170
ø100	10	18	M10x70	M10x80
	15		x75	x85
	20		x80	x90
	25		x85	x95
	30		x90	x100
	35		x95	x105
	40		x100	x110
	45		x105	x115
	50		x110	x120
	75		x145	x155
	100		x170	x180

● SSD2-G5

Bore size	Stroke	L	dxL	
			SSD2-G5	SSD2-G5L
ø32	5	7.5	M5x40	M5x50
	10		x45	x55
	15		x50	x60
	20		x55	x65
	25		x60	x70
	30		x65	x75
	35		x70	x80
	40		x75	x85
	45		x80	x90
	50		x85	x95
	75		x115	x130
	100		x140	x155
ø40	5	6	M5x45	M5x55
	10		x50	x60
	15		x55	x65
	20		x60	x70
	25		x65	x75
	30		x70	x80
	35		x75	x85
	40		x80	x90
	45		x85	x95
	50		x90	x100
	75		x125	x135
	100		x150	x160
ø50	10	11	M6x55	M6x65
	15		x60	x70
	20		x65	x75
	25		x70	x80
	30		x75	x85
	35		x80	x90
	40		x85	x95
	45		x90	x100
	50		x95	x105
	75		x130	x140
	100		x155	x165
ø63	10	13	M8x60	M8x70
	15		x65	x75
	20		x70	x80
	25		x75	x85
	30		x80	x90
	35		x85	x95
	40		x90	x100
	45		x95	x105
	50		x100	x110
	75		x135	x145
	100		x160	x170
ø80	10	17.5	M10x70	M10x80
	15		x75	x85
	20		x80	x90
	25		x85	x95
	30		x90	x100
	35		x95	x105
	40		x100	x110
	45		x105	x115
	50		x110	x120
	75		x145	x155
	100		x170	x180
ø100	10	18	M10x80	M10x90
	15		x85	x95
	20		x90	x100
	25		x95	x105
	30		x100	x110
	35		x105	x115
	40		x110	x120
	45		x115	x125
	50		x120	x130
	75		x155	x165
	100		x180	x190

SCP*3
CMK2
CMA2
SCM
SCG
SCA2
SCS2
CKV2
CAV2/COVP/N2
SSD2
SSG
SSD
CAT
MDC2
MVC
SMG
MSD/MSDG
FC*
STK
SRL3
SRG3
SRM3
SRT3
MRL2
MRG2
SM-25
ShkAbs
FJ
FK
Spd Contr
Ending

● SSD2-G, G2, 3

Bore size	Stroke	L	dxL	
			SSD2-G, G2, 3	SSD2-G, G2, 3L
ø20	5	6	M5x25	M5x35
	10		x35	x45
	15		x40	x50
	20		x45	x55
	25		x50	x60
	30		x55	x65
	35		x60	x70
	40		x65	x75
	45		x70	x80
	50		x75	x85
ø25	5	8	M5x30	M5x40
	10		x35	x45
	15		x40	x50
	20		x45	x55
	25		x50	x60
	30		x55	x65
	35		x60	x70
	40		x65	x75
	45		x70	x80
	50		x75	x85
ø32	5	7.5	M5x30	M5x40
	10		x35	x45
	15		x40	x50
	20		x45	x55
	25		x50	x60
	30		x55	x65
	35		x60	x70
	40		x65	x75
	45		x70	x80
	50		x75	x85
	75		x105	x120
	100		x130	x145
ø40	5	6	M5x35	M5x45
	10		x40	x50
	15		x45	x55
	20		x50	x60
	25		x55	x65
	30		x60	x70
	35		x65	x75
	40		x70	x80
	45		x75	x85
	50		x80	x90
	75		x115	x125
	100		x140	x150
ø50	10	11	M6x45	M6x55
	15		x50	x60
	20		x55	x65
	25		x60	x70
	30		x65	x75
	35		x70	x80
	40		x75	x85
	45		x80	x90
	50		x85	x95
	75		x120	x130
	100		x145	x155
ø63	10	13	M8x50	M8x60
	15		x55	x65
	20		x60	x70
	25		x65	x75
	30		x70	x80
	35		x75	x85
	40		x80	x90
	45		x85	x95
	50		x90	x100
	75		x125	x135
	100		x150	x160
ø80	10	17.5	M10x60	M10x70
	15		x65	x75
	20		x70	x80
	25		x75	x85
	30		x80	x90
	35		x85	x95
	40		x90	x100
	45		x95	x105
	50		x100	x110
	75		x135	x145
	100		x160	x170
ø100	10	18	M10x70	M10x80
	15		x75	x85
	20		x80	x90
	25		x85	x95
	30		x90	x100
	35		x95	x105
	40		x100	x110
	45		x105	x115
	50		x110	x120
	75		x145	x155
	100		x170	x180

● SSD2-T1L

Bore size	Stroke	L	dxL
			SSD2-T1L
ø32	5	7.5	M5x40
	10		x45
	15		x50
	20		x55
	25		x60
	30		x65
	35		x70
	40		x75
	45		x80
	50		x85
	75		x120
	100		x145
ø40	5	6	M5x45
	10		x50
	15		x55
	20		x60
	25		x65
	30		x70
	35		x75
	40		x80
	45		x85
	50		x90
	75		x125
	100		x150
ø50	10	11	M6x55
	15		x60
	20		x65
	25		x70
	30		x75
	35		x80
	40		x85
	45		x90
	50		x95
	75		x130
	100		x155
ø63	10	13	M8x60
	15		x65
	20		x70
	25		x75
	30		x80
	35		x85
	40		x90
	45		x95
	50		x100
	75		x135
	100		x160

● SSD2-K-*C

Bore size	Stroke	L	dxL	
			SSD2-K-*C	SSD2-KL-*C
ø20	5	6	M5x30	M5x40
	10		x50	x60
	15		x55	x65
	20		x60	x70
	25		x65	x75
	30		x70	x80
	35		x75	x85
	40		x80	x90
	45		x85	x95
	50		x90	x100
ø25	5	8	M5x35	M5x45
	10		x50	x60
	15		x55	x65
	20		x60	x70
	25		x65	x75
	30		x70	x80
	35		x75	x85
	40		x80	x90
	45		x85	x95
	50		x90	x100
ø32	5	7.5	M5x45	M5x55
	10		x50	x60
	15		x55	x65
	20		x60	x70
	25		x65	x75
	30		x70	x80
	35		x75	x85
	40		x80	x90
	45		x85	x95
	50		x90	x100
	75		x125	x135
	100		x150	x160
ø40	5	6	M5x45	M5x55
	10		x50	x60
	15		x55	x65
	20		x60	x70
	25		x65	x75
	30		x70	x80
	35		x75	x85
	40		x80	x90
	45		x85	x95
	50		x90	x100
	75		x125	x135
	100		x150	x160
ø50	10	11	M6x55	M6x65
	15		x60	x70
	20		x65	x75
	25		x70	x80
	30		x75	x85
	35		x80	x90
	40		x85	x95
	45		x90	x100
	50		x95	x105
	75		x130	x140
	100		x155	x165
ø63	10	13	M8x60	M8x70
	15		x65	x75
	20		x70	x80
	25		x75	x85
	30		x80	x90
	35		x85	x95
	40		x90	x100
	45		x95	x105
	50		x100	x110
	75		x135	x145
	100		x160	x170
ø80	10	17.5	M10x70	M10x80
	15		x75	x85
	20		x80	x90
	25		x85	x95
	30		x90	x100
	35		x95	x105
	40		x100	x110
	45		x105	x115
	50		x110	x120
	75		x145	x155
	100		x170	x180
ø100	10	18	M10x80	M10x90
	15		x85	x95
	20		x90	x100
	25		x95	x105
	30		x100	x110
	35		x105	x115
	40		x110	x120
	45		x115	x125
	50		x120	x130
	75		x155	x165
	100		x180	x190

● SSD2-KU

Bore size	Stroke	L	dxL	
			SSD2-KU	SSD2-KUL
ø20	5	6	M5x30	M5x40
	10		x35	x60
	15		x55	x65
	20		x60	x70
	25		x65	x75
	30		x70	x80
	35		x75	x85
	40		x80	x90
	45		x85	x95
	50		x90	x100
ø25	5	8	M5x35	M5x45
	10		x50	x60
	15		x55	x65
	20		x60	x70
	25		x65	x75
	30		x70	x80
	35		x75	x85
	40		x80	x90
	45		x85	x95
	50		x90	x100
ø32	5	7.5	M5x45	M5x55
	10		x50	x60
	15		x55	x65
	20		x60	x70
	25		x65	x75
	30		x70	x80
	35		x75	x85
	40		x80	x90
	45		x85	x95
	50		x90	x100
	75		x125	x135
	100		x150	x160
ø40	5	6	M5x45	M5x55
	10		x50	x60
	15		x55	x65
	20		x60	x70
	25		x65	x75
	30		x70	x80
	35		x75	x85
	40		x80	x90
	45		x85	x95
	50		x90	x100
	75		x125	x135
	100		x150	x160
ø50	10	11	M6x55	M6x65
	15		x60	x70
	20		x65	x75
	25		x70	x80
	30		x75	x85
	35		x80	x90
	40		x85	x95
	45		x90	x100
	50		x95	x105
	75		x130	x140
	100		x155	x165
ø63	10	13	M8x60	M8x70
	15		x65	x75
	20		x70	x80
	25		x75	x85
	30		x80	x90
	35		x85	x95
	40		x90	x100
	45		x95	x105
	50		x100	x110
	75		x135	x145
	100		x160	x170
ø80	10	17.5	M10x70	M10x80
	15		x75	x85
	20		x80	x90
	25		x85	x95
	30		x90	x100
	35		x95	x105
	40		x100	x110
	45		x105	x115
	50		x110	x120
	75		x145	x155
	100		x170	x180
ø100	10	18	M10x80	M10x90
	15		x85	x95
	20		x90	x100
	25		x95	x105
	30		x100	x110
	35		x105	x115
	40		x110	x120
	45		x115	x125
	50		x120	x130
	75		x155	x165
	100		x180	x190

SCP*3
CMK2
CMA2
SCM
SCG
SCA2
SCS2
CKV2
CAV2/COVP/N2
SSD2
SSG
SSD
CAT
MDC2
MVC
SMG
MSD/MSDG
FC*
STK
SRL3
SRG3
SRM3
SRT3
MRL2
MRG2
SM-25
ShkAbs
FJ
FK
Spd Contr
Ending

● SSD2-L4

Bore size	Stroke	L	dxL	
			SSD2-KU	SSD2-KUL
ø40	5	6	M5x45	M5x55
	10		x50	x60
	15		x55	x65
	20		x60	x70
	25		x65	x75
	30		x70	x80
	35		x75	x85
	40		x80	x90
	45		x85	x95
	50		x90	x100
	75		x125	x135
	100		x150	x160
ø50	10	11	M6x55	M6x65
	15		x60	x70
	20		x65	x75
	25		x70	x80
	30		x75	x85
	35		x80	x90
	40		x85	x95
	45		x90	x100
	50		x95	x105
	75		x130	x140
	100		x155	x165
ø63	10	13	M8x60	M8x70
	15		x65	x75
	20		x70	x80
	25		x75	x85
	30		x80	x90
	35		x85	x95
	40		x90	x100
	45		x95	x105
	50		x100	x110
	75		x135	x145
	100		x160	x170
ø80	10	17.5	M10x70	M10x80
	15		x75	x85
	20		x80	x90
	25		x85	x95
	30		x90	x100
	35		x95	x105
	40		x100	x110
	45		x105	x115
	50		x110	x120
	75		x145	x155
	100		x170	x180
ø100	10	18	M10x80	M10x90
	15		x85	x95
	20		x90	x100
	25		x95	x105
	30		x100	x110
	35		x105	x115
	40		x110	x120
	45		x115	x125
	50		x120	x130
	75		x155	x165
	100		x180	x190

● SSD2-P7*/P5*

Bore size	Stroke	L	dxL	
			SSD2-K-*C	SSD2-KL-*C
ø12	5	6.5	M5x35	M5x45
	10		x45	x60
	15		x50	x65
	20		x55	x70
	25		x60	x75
	30		x65	x80
ø16	5	6.5	M5x40	M5x50
	10		x45	x60
	15		x50	x65
	20		x55	x70
	25		x60	x75
	30		x65	x80
ø20	5	6	M5x35	M5x45
	10		x45	x60
	15		x50	x65
	20		x55	x70
	25		x60	x75
	30		M5x65	M5x80
	35		x70	x85
	40		x75	x90
	45		x80	x95
	50		x85	x100
ø25	5	8	M5x40	M5x50
	10		x45	x60
	15		x50	x65
	20		x55	x70
	25		x60	x75
	30		x65	x80
	35		x70	x85
	40		x75	x90
	45		x80	x95
	50		x85	x100
ø32	5	7.5	M5x40	M5x55
	10		x45	x60
	15		x50	x65
	20		x55	x70
	25		x60	x75
	30		x65	x80
	35		x70	x85
	40		x75	x90
	45		x80	x95
	50		x85	x100
	75		x120	x135
	100		x145	x160
ø40	5	6	M5x45	M5x55
	10		x50	x60
	15		x55	x65
	20		x60	x70
	25		x65	x75
	30		x70	x80
	35		x75	x85
	40		x80	x90
	45		x85	x95
	50		x90	x100
	75		x125	x135
	100		x150	x160
ø50	10	11	M6x55	M6x65
	15		x60	x70
	20		x65	x75
	25		x70	x80
	30		x75	x85
	35		x80	x90
	40		x85	x95
	45		x90	x100
	50		x95	x105
	75		x130	x140
	100		x155	x165
ø63	10	13	M8x60	M8x70
	15		x65	x75
	20		x70	x80
	25		x75	x85
	30		x80	x90
	35		x85	x95
	40		x90	x100
	45		x95	x105
	50		x100	x110
	75		x135	x145
	100		x160	x170
ø80	10	17.5	M10x75	M10x85
	15		x80	x90
	20		x85	x95
	25		x90	x100
	30		x95	x105
	35		x100	x110
	40		x105	x115
	45		x110	x120
	50		x115	x125
	75		x150	x160
	100		x175	x185
ø100	10	18	M10x85	M10x95
	15		x90	x100
	20		x95	x105
	25		x100	x110
	30		x105	x115
	35		x110	x120
	40		x115	x125
	45		x120	x130
	50		x125	x135
	75		x160	x170
	100		x185	x195

MEMO

Pneumatic components

Safety Precautions

Be sure to read this section before use.
Refer to Intro Page 73 for general information of the cylinder, and to Intro Page 80 for general information of the cylinder switch.

Product-specific cautions: Compact cylinder SSD2 Series

Design/selection

1. With heat resistant cylinder switch SSD2-T1L

WARNING

■ Cylinder
At an ambient temperature of 150°C, external leakage will occur gradually after approximately 500,000 uses.

■ Heat resistant cylinder switch
The lamps used are LEDs.
Visibility will gradually decrease with continuous use under high temperatures. As the LED lamp circuit is separated from the switch output circuit, the switch output works normally even if the LED lamp turns OFF.

2. Position locking SSD2-Q

WARNING

■ If pressure is supplied to port Ⓐ when both ports are not pressurized and the piston is locked, the lock may not be released or the piston rod may suddenly pop out just after the lock is released. This can be extremely hazardous.
To release the locking mechanism, be sure to supply pressure to port Ⓑ. Check that a load is not applied to the locking mechanism upon release.

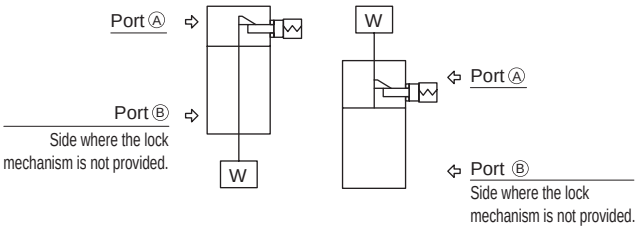

■ For usage where the drop rate is increased using the quick exhaust valve, the lock may not release normally because the cylinder body starts operating before the lock pin. For the position locking cylinder, do not use the quick exhaust valve.

■ Do not use 3-position valves.
Do not use the cylinder in combination with a 3-position (especially, closed center metal seal type) valve. If the port at the side where the lock mechanism is provided is pressurized, the lock cannot be engaged. Even if it is locked once, the air leaked from the valve enters the cylinder, and the lock may be released after a certain period of time.

CAUTION

■ Cylinder load factor must be 50% or less.
If the load factor is high, the lock may not be released, or the lock section may be damaged.

■ If back pressure is applied to the locking mechanism, the lock may be released. Use a discrete valve, or an individual exhaust manifold.

■ Do not use multiple synchronized cylinders.
Do not use so that 1 workpiece is moved by synchronizing 2 or more position locking cylinders. Lock release may fail for one of the cylinders.

3. Fine speed SSD2-F, SSD2-KF

CAUTION

■ Use without lubrication.
Applying lubrication may cause changes in characteristics.

■ Assemble the speed controller near the cylinder.
When installed far from the cylinder, the speed becomes unstable. Use the SC-M3/M5, SC3W, SCD-M3/M5 or SC3U Series speed controller.

■ In general, the speed is more stable at higher air pressure and lower load factor.
Use at a 50% or less load factor.

■ The speed control is achieved with a meter-out circuit.
When fine speed activation is performed with operating direction PUSH for the single rod cylinder, the popping out phenomenon occurs when operation starts if the load resistance is low. For countermeasures, use the ⓑ, ⓒ or ⓓ circuit. Note that circuit ⓓ is the most stable.

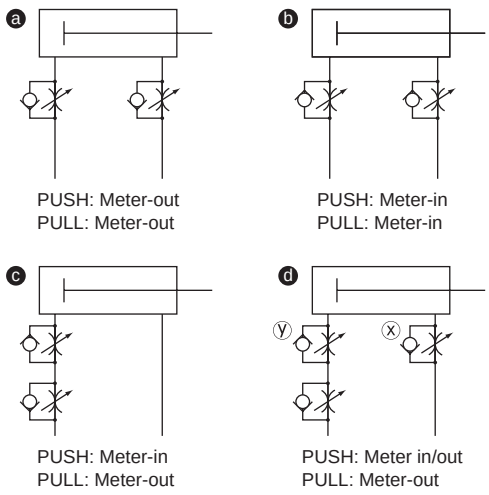

Speed adjustment method for PUSH operation of ⓓ circuit:
1. Set the speed with the speed controller x.
2. Restrict the speed with the speed controller y until there is no popping out.
3. Check the speed again.

(*1) When comparing ⓑ, ⓒ, and ⓓ, operation is the most stable with the ⓓ circuit.

(*2) For vertical mounting, combine the cylinder with a meter-out circuit, as it will fall under its own weight when a meter-in circuit is used.

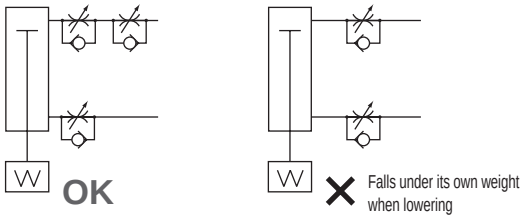

(*3) Use the circuit shown in the figure below for the serial connection of the speed controllers.

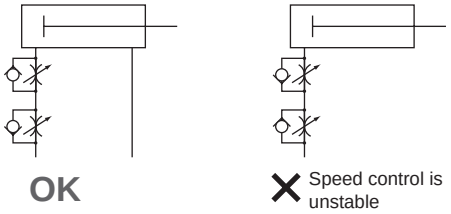

(Guidelines for pop-out generation)
Popping out occurs in the following cases.
· Thrust > Resistance

* Resistance: Thrust caused by residual pressure on the exhaust side (in the fine speed, suction pressure = residual pressure) + { When using horizontally : frictional force caused by load / When using vertically : load self-weight

■ Do not apply a lateral load to the cylinder.
With a lateral load, operation will become unstable.

■ Avoid using this product where vibration is present.
The product will be adversely affected by vibration and operation will become unstable.

4. Low friction SSD2-KU

⚠ WARNING

■ Durability differs based on working conditions and model characteristics.
This cylinder has internal leakage.
Refer to specifications (page 864) for amount of leakage.

⚠ CAUTION

■ Mount a speed controller on the cylinder.
Mount the speed controller on the cylinder. Use each cylinder within the applicable working piston speed range. When using the cylinder for a balancer, etc., it may be advisable not to mount a speed controller in order to improve the supply and exhaust efficiency. Depending on the application, circuits ⓐ to ⓒ below are recommended.

ⓐ Tension control (winding machine, etc.)

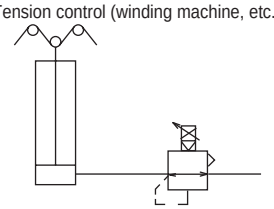

ⓑ Balancer (processing machine Z-axis, etc.)

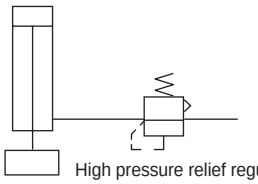

ⓒ Load control (grinding, etc.)

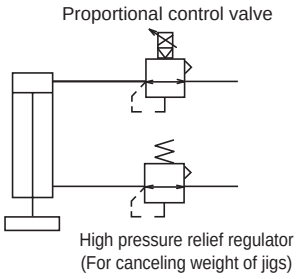

* To improve the supply and exhaust efficiency, make the volume of piping as large as possible.

■ Do not lubricate. The properties fluctuate.

■ Because poor quality air worsens the characteristics and adversely affects the durability, use clean air with the piping below.

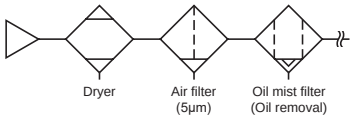

■ Assemble the speed controller near the cylinder.
When installed far from the cylinder, the speed becomes unstable.

■ In general, the speed is more stable at higher air pressure and lower load factor.
Use at a 50% or less load factor.

■ A rubber cushion is built into the compact cylinder high load. The table on page 1060 shows the kinetic energy which can be absorbed by the cushion. If kinetic energy exceeds these values, consider using a separate shock absorber.

SCP*3
CMK2
CMA2
SCM
SCG
SCA2
SCS2
CKV2
CAV2/COVP/N2
SSD2
SSG
SSD
CAT
MDC2
MVC
SMG
MSD/MSDG
FC*
STK
SRL3
SRG3
SRM3
SRT3
MRL2
MRG2
SM-25
ShkAbs
FJ
FK
Spd Contr
Ending

Bore size (mm)	Allowable absorbed energy (J)	
	SSD2-K	SSD2-KU
ø12	0.04	-
ø16	0.09	-
ø20	0.16	
ø25	0.16	
ø32	0.40	
ø40	0.63	
ø50	0.98	
ø63	1.56	
ø80	2.51	
ø100	3.92	

Kinetic energy (J) $= \frac{1}{2}$ x weight (kg) x [speed (m/s)]^2

(Note) Calculating kinetic energy

Average cylinder speed is obtained with $Va = \frac{L}{T}$.

Va: Average speed (m/s)
L: Cylinder stroke (m)
T: Operation time (s)

With respect to this, the cylinder speed just before the stroke end can be obtained with the following simplified formula.

$Vm = \frac{L}{T} \times (1 + 1.5 \times \frac{\omega}{100})$

Vm: Speed immediately prior to stroke end (m/s)
ω: Cylinder load factor (%)

Use this Vm value as speed to calculate kinetic energy.

The following is a graph which shows the allowable energy values of the compact cylinder high load in the form of the relationship between the piston speed and the load.

High load allowable energy value graph

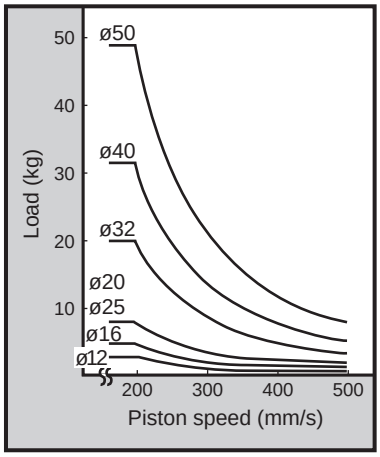

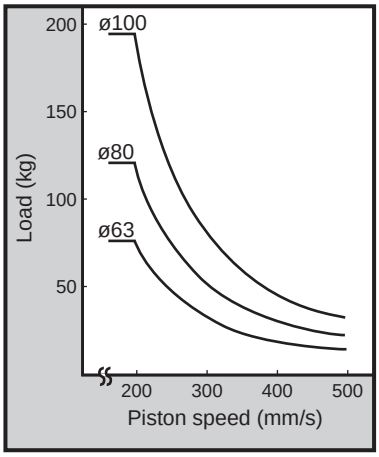

● Note: Usable in the range below and to the left of the curve.
For the upper right range, an external cushion is required.

5. Coolant proof SSD2-G2/G3 / SSD2-KG2/KG3

⚠ CAUTION

■ Do not apply an eccentric load to the piston rod.
The service life of the scraper or bearing could be shortened.

■ If the piston rod is not exposed to splattered coolant or water, use the G or G1 Series.
In the case that the G2 or G3 Series are not exposed to splattering of coolant or water, the lubrication of the piston rod will run out and the service life will be shortened.

■ Mount a speed controller on the cylinder.
● Mount a speed controller on the cylinder. Use each cylinder within the applicable working piston speed range.

6. Anti-spatter adherence SSD2-G4/SSD2-KG4/SSD2-DG4

⚠ WARNING

■ The durability of this cylinder series is improved in comparison to standard cylinders when used in an atmosphere exposed to spatter. But durability may be shorter than the standard cylinder when used in other atmospheres.

Mounting, installation and adjustment

1. Common

CAUTION

- The cylinder switch may malfunction if there is a magnetic substance such as a metal plate installed adjacently. Confirm that a distance of at least 10 mm is allocated from the surface of the cylinders.

(Same clearance for all bore sizes)

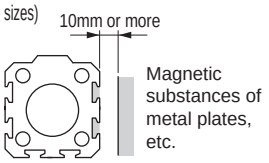

- The cylinder switch may malfunction if cylinders are installed adjacently. Check that the following distances are allocated between cylinders. (Same clearance for all bore sizes)

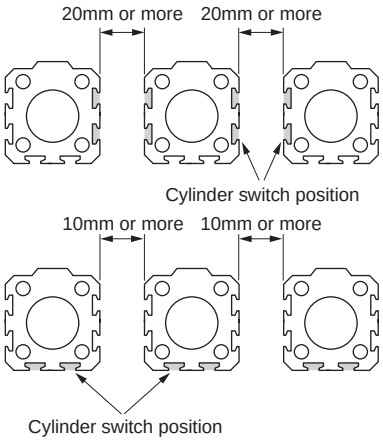

- As compatible piping fittings are limited, refer to the table below to select the fitting.

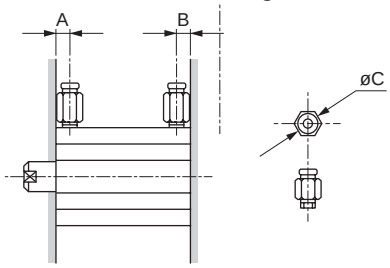

Item / Bore size (mm)	Port size	Port position A	Port position B	Applicable fittings	Fitting O.D. øC	Inapplicable fittings
ø12	M5	5.5	5.5	SC3W-M5-4 SC3W-M5-6 GWS4-M5-S GWS4-M5 GWL4-M5 GWL6-M5	ø11 or less	GWS6-M5
ø16						
ø20		8	5.5			
ø25		11	6			
ø32	Rc1/8	8	8	SC3W-6-4, 6, 8 GWS4-6 GWS6-6 GWS8-6 GWL4-6 GWL6-6	ø15 or less	GWS10-6 GWL8-6 GWL10-6
ø40		12	8.5			
ø50	Rc1/4	10.5	10.5	SC3W-8-6, 8, 10 GWS4-8 GWS6-8 GWS10-8 GWL4 to 12-8	ø21 or less	GWS12-8
ø63		13	11			
ø80	Rc3/8	16	13	SC3W-10-6, 8, 10 GWS6-10 GWS8-10 GWS10-10 GWL6 to 12-10	ø21 or less	-
ø100		23	15			

2. Single acting SSD2-X/SSD2-Y

CAUTION

- Do not leave the single acting cylinder pressurized.
  If it is left pressurized for long periods, the piston rod may not return due to spring load when the pressure is released. Use the double acting if the cylinder needs to be left pressurized for long periods.

3. Position locking SSD2-Q

CAUTION

- The lock mechanism functions at the stroke end, so that if the stopper is engaged during the stroke by the external stopper, the lock mechanism may not work and the piston could fall. When setting a load, make sure to install after checking that the locking mechanism works.
- Supply pressure equal to or higher than the min. working pressure to the port on the lock mechanism side.
- When the piping at the side where the lock mechanism is provided is long and thin, or when the speed controller is far away from the cylinder port, note that it takes time to engage the lock. Clogging in the silencer mounted on the EXH port of the valve may cause the same result.

4. Fine speed SSD2-F, SSD2-KF

CAUTION

- Perform adjustment such as centering so that a lateral load is not applied to the cylinder.
  Adjust and install the sliding guide so that it is not twisted.
  - When the load or the resistance fluctuates, operation becomes unstable.
  - With a large difference between static friction and kinematic friction of the guide, operation becomes unstable.

5. Low friction SSD2-KU

CAUTION

- Perform adjustment such as centering so that lateral load is not applied to the cylinder.
  Adjust and install the sliding guide so that it is not twisted.
  - When the load or the resistance fluctuates, operation becomes unstable.
  - For the long stroke type, the piston rod's self-weight causes the speed to become unstable. Install the guide before use.
  - With a large difference between static friction and kinematic friction of the guide, operation becomes unstable.
- Avoid using in environments with water vapor or high humidity or in alkaline atmospheres.

6. Rotation-stop SSD2-M, DM

⚠ CAUTION

- Do not use the product so as to apply rotation torque to the piston rod.
  The bushing for the rotation lock may deform and significantly shorten the service life.

- Use the product so that load on the piston rod is always applied in the rod axial direction.

- When fixing a workpiece onto the tip of the piston rod, retract the piston rod to the stroke end and apply a wrench to the section protruding from the rod's parallel section. Tighten so that torque is not applied to the cylinder body.

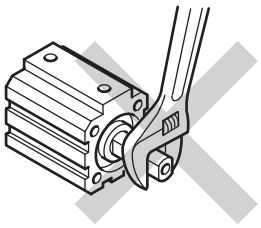

7. Double rod/rotation-stop SSD2-DM

- Make sure that a reverse torque is not applied to the piston rods at either side of the cylinder. Applying torque can loosen the fastened portions of the internal components and lead to unexpected trouble. In addition, when attaching/removing loads, lock the piston rod using the width across flats on the end where the load will be attached, and be sure not to apply any torque on the rotation lock guide.

8. Two-stage SSD2-W

- Remove the nut mounted on the body through bolt tip (rod side) before mounting.
  This is a nut for fixing cylinder 1 and cylinder 2. It is not for mounting.

Use/maintenance

1. Common

⚠ WARNING

- Use appropriate pliers (C-snap ring mounting tool) to install and remove rod metal.

- Even in cases when appropriate pliers (C-snap ring mounting tool) are used, be careful as the snap ring may pop out at the tip of the pliers (C-snap ring mounting tool) and cause physical or equipment damage.
  In addition, when mounting the unit, be sure that the unit fits securely into the snap ring groove before supplying air.

2. Position locking SSD2-Q

⚠ WARNING

- For safety purposes, prevent the load from falling under its own weight during maintenance.

- If pressure is supplied to port Ⓐ when both ports are not pressurized and the piston is locked, the lock may not be released or the piston rod may suddenly pop out just after the lock is released. This can be extremely hazardous.
  To release the locking mechanism, be sure to supply pressure to port Ⓑ.
  Check that a load is not applied to the locking mechanism upon release.

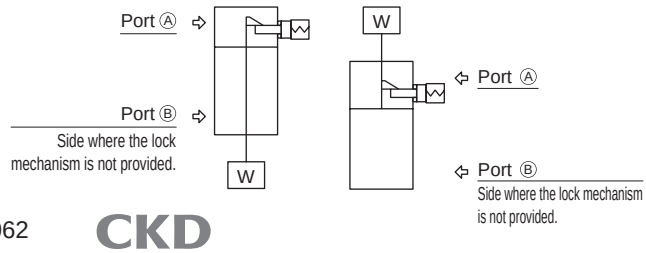

- For usage where the drop rate is increased using the quick exhaust valve, the lock may not release normally because the cylinder body starts operating before the lock pin. For the position locking cylinder, do not use the quick exhaust valve.

- When stopping the piston with an external buffer device (shock absorber, etc.), adjust it so that there is no bound. If the piston bounds at the stroke end, the sleeve and stopper piston will collide strongly and may result in damage of the locking mechanism.
  Inspect the piston once or twice a year to make sure there is no damage to the retainer caused by this phenomenon.

⚠ CAUTION

- After the locking mechanism is manually operated, make sure to return the locking mechanism to the original state before use. Do not perform manual operation except for adjustment, as it is dangerous.

- When mounting or adjusting the cylinder, release the lock.
  If mounting work, etc., is done while the lock is engaged, the lock part may be damaged.

- Do not use multiple synchronized cylinders.
  Do not use so that 1 workpiece is moved by synchronizing 2 or more position locking cylinders. Lock release may fail for one of the cylinders.

- Use the speed controller with meter-out.
  If the meter-in control is used, the lock may not be able to be released.

■ At the side where the lock mechanism is attached, be sure to use the cylinder from the stroke end.
If the cylinder piston does not reach the stroke end, the lock may not be engaged or the lock may not be able to be released.

■ Manual override non-locking release method
By screwing the hexagon socket head cap screw into the stopper piston and pulling the bolt X mm with force of 20 N or more, the stopper piston moves and the lock is released. (when horizontally installed with no load or with the opposite side port pressurized). When the screw is released, the internal spring causes the stopper piston to return. When it fits into the piston rod groove, the piston is locked.

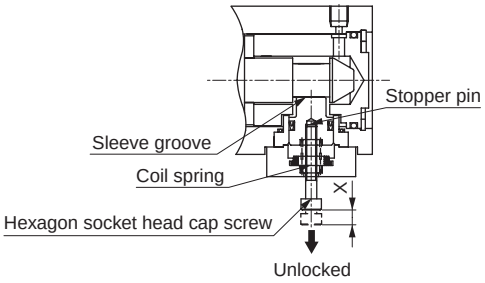

Hexagon socket head cap screw dimensions and travel distance Unit: mm

Bore size	Dimensions	Travel distance X
ø20	M3x20	3
ø25	M3x20	3
ø32	M3x20	3
ø40	M3x20	3
ø50	M4x30	3
ø63	M4x30	3
ø80	M4x30	3.5
ø100	M4x30	3.5

3. Low friction SSD2-U

⚠ CAUTION

■ Do not disassemble the product. Once disassembled, the performance may not be retained.
For this product, ordering just the replacement parts is not possible.

■ Smoking with hands smeared with the fluorine grease used for the U Series could generate harmful gases and cause physical harm.

SSG

Guided super compact cylinder

ø12/ø16/ø20/ø25/ø32/ø40/ø50
ø63/ø80/ø100

Space saving structure

Overview

These cylinders belong to the compact cylinder SSD Series, equipped with a guide rod and plate.No more struggles with design
and assembly.

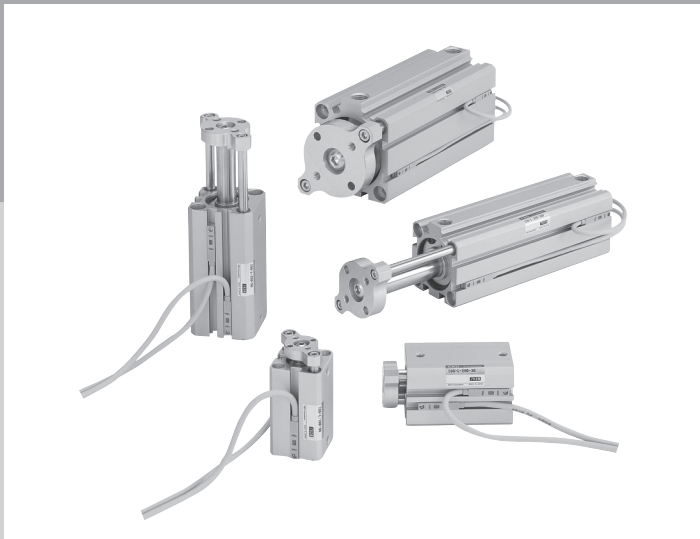

CONTENTS

Product introduction	1066
Series variation	1067
● Double acting/single rod (SSG)	1068
List of mounting bolts	1076
Technical data	1077
⚠ Safety precautions	1078

The cylinder switches T2YH, T2YV, T3YH, and T3YV are scheduled for end of production at the end of December 2023.

Troublesome design and assembly eliminated! Load directly! SSG Series providing the compact cylinder SSD Series with a guide rod and plate.

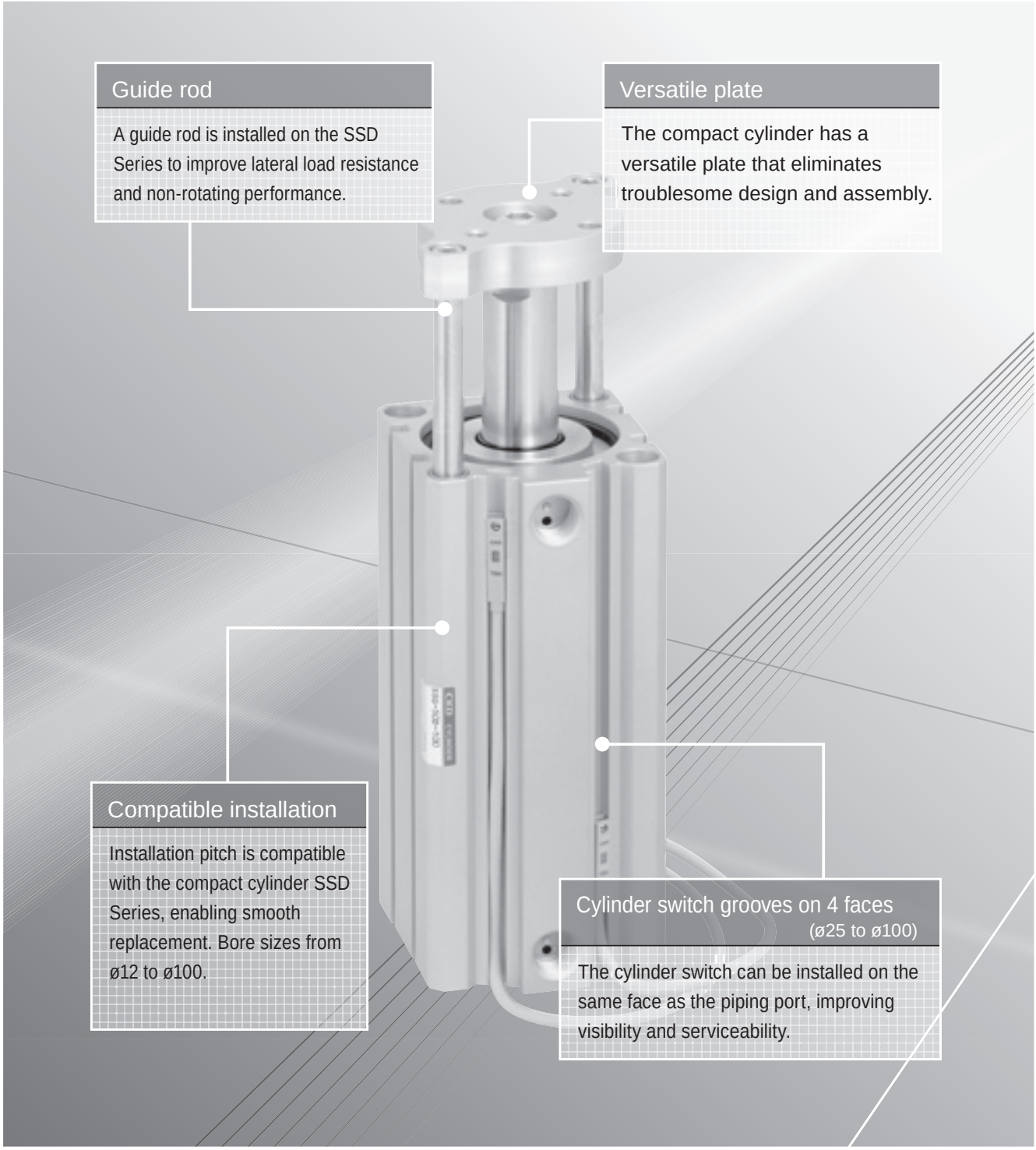

Series variation

Compact cylinder SSG Series

●: Standard, ◎: Option, ▒: Not available

Variation	Model No. JIS symbol	Bore size (mm)	Stroke (mm) 5	10	15	20	25	30	35	40	45	50	75	100	Max. stroke (mm)	Min. stroke (mm)	Switch	Page
With double acting/ single rod switch, with 2-color LED, off-delay, T1 switch	SSG SSG-L SSG-L1	ø12/ø16	●	●	●	●	●	●							30	1	◎	1068
		ø20/ø25	●	●	●	●	●	●	●	●	●	●			50			
		ø32/ø40	●	●	●	●	●	●	●	●	●	●	●	●	100			
		ø50/ø63/ø80/ø100		●	●	●	●	●	●	●	●	●	●	●				

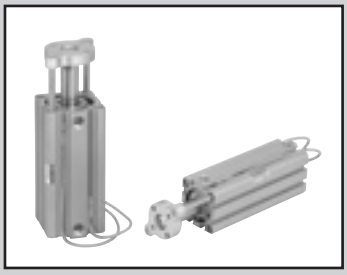

Guided super compact cylinder double acting/single rod

SSG Series

● Bore size: ø12/ø16/ø20/ø25/ø32/ø40/ø50/ø63/ø80/ø100

JIS symbol 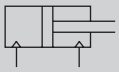

RoHS CAD

Specifications

Item		SSG									
Bore size	mm	ø12	ø16	ø20	ø25	ø32	ø40	ø50	ø63	ø80	ø100
Actuation		Double acting									
Working fluid		Compressed air									
Max. working pressure	MPa	1.0 (≈150 psi, 10 bar)									
Min. working pressure	MPa	0.15 (≈22 psi, 1.5 bar)				0.1 (≈15 psi, 1 bar)					
Proof pressure	MPa	1.6 (≈230 psi, 16 bar)									
Ambient temperature	°C	-10 (14°F) to 60 (140°F) (no freezing)									
Port size		M5				Rc1/8 *1		Rc1/4		Rc3/8	
Stroke tolerance mm	Without cushion	$^{+1.0}_{0}$									
	With rubber cushion	$^{+2.0}_{0}$									
Working piston speed	mm/s	50 to 500						50 to 300			
Cushion		With a rubber cushion or without can be selected.									
Lubrication		Not required (use turbine oil class 1 ISO VG32 if necessary for lubrication)									
Allowable absorbed energy J	Without cushion	0.004	0.01	0.016	0.021	0.025	0.092	0.1	0.12	0.27	0.56
	With rubber cushion	0.03	0.05	0.10	0.16		0.44	0.75	0.78	2.51	3.92

*1: The ø32 bore size with a 5 mm stroke and without a switch has a port size of M5.

Stroke

Bore size (mm)	Standard stroke (mm)	Max. stroke (mm)	Min. stroke (mm)
ø12	5/10/15/20/25/30	30	1
ø16			
ø20	5/10/15/20/25/30/35/40/45/50	50	
ø25			
ø32	5/10/15/20/25/30/35/40/45/50/75/100	100	
ø40			
ø50	10/15/20/25/30/35/40/45/50 75/100		
ø63			
ø80			
ø100			

*1 : The custom stroke is available in 1 mm increments.
The dimensions of the total length with the custom stroke are the same as the next longer standard stroke.
*2 : When using the type with a switch, refer to the table below.

Min. stroke with switch (with 1 or 2 switches)

Bore size (mm)	T0H/V / T5H/V	T2H/V / T3H/V
ø12	6	5
ø16		
ø20	5	
ø25		
ø32		
ø40		
ø50		
ø63		
ø80		
ø100		

*1: Less than 10 mm with the 2-color LED switch is not available.

Switch specifications (F-switch)

● 1-color/2-color LED

Item	2-wire proximity	3-wire proximity	2-wire proximity		3-wire proximity		
	F2S	F3S	F2H/F2V	F2YH/F2YV	F3H/F3V	F3PH/F3PV (made to order)	F3YH/F3YV
Applications	Dedicated for programmable controller	For programmable controller, relay	Dedicated for programmable controller		For programmable controller, relay		
Output method	-	NPN output	-		NPN output	PNP output	NPN output
Power supply voltage	-	10 to 28 VDC	-		10 to 28 VDC	4.5 to 28 VDC	10 to 28 VDC
Load voltage	10 to 30 VDC	30 VDC or less	10 to 30 VDC	24 VDC ±10%	30 VDC or less		
Load current	5 to 20 mA	50 mA or less	5 to 20 mA		100 mA or less	50 mA or less	
Indicator	LED (Lit when ON)		Yellow LED (Lit when ON)	Red/green LED (Lit when ON)	Yellow LED (Lit when ON)		Red/green LED (Lit when ON)
Leakage current	1 mA or less	10 μA or less	1 mA or less		10 μA or less		
Weight g	1 m:10 3 m:29						

Switch specifications (T-switch)

● 1-color/2-color LED/for AC magnetic field

Item	2-wire proximity				3-wire proximity				2-wire reed							2-wire proximity
	T1H/ T1V	T2H/T2V/ T2JH/T2JV	T2YH/ T2YV	T2WH/ T2WV	T3H/ T3V	T3PH/ T3PV	T3YH/ T3YV	T3WH/ T3WV	T0H/T0V		T5H/T5V		T8H/T8V			T2YD (*4) T2YDT
Applications	For programmable controller, relay, compact solenoid valve	Dedicated for programmable controller			For programmable controller, relay				For programmable controller, relay		For programmable controller, relay, IC circuit (no indicator lamp), serial connection		For programmable controller, relay			Dedicated for programmable controller
Output method	-				NPN output	PNP output	NPN output	NPN output	-							
Pwr. supp. V.	-				10 to 28 VDC				-							
Load voltage	85 to 265 VAC	10 to 30 VDC		24 VDC ±10%	30 VDC or less				12/24 VDC	100/110 VAC	5/12/24 VDC	100/110 VAC	12/24 VDC	110 VAC	220 VAC	24 VDC ±10%
Load current	5 to 100 mA	5 to 20 mA (*3)			100 mA or less		50 mA or less		5 to 50 mA	7 to 20 mA	50 mA or less	20 mA or less	5 to 50 mA	7 to 20 mA	7 to 10 mA	5 to 20 mA
Indicator	LED (Lit when ON)	LED (Lit when ON)	Red/green LED (Lit when ON)	Red/green LED (Lit when ON)	LED (Lit when ON)	Yellow LED (Lit when ON)	Red/green LED (Lit when ON)	Red/green LED (Lit when ON)	LED (Lit when ON)		No indicator lamp		LED (Lit when ON)			Red/green LED (Lit when ON)
Leakage current	≤ 1mA at 100 VAC ≤ 2mA at 200 VAC	1 mA or less			10 μA or less				0 mA							1 mA or less
Weight g	1 m:33 3 m:87 5 m:142	1 m:18 3 m:49 5 m:80	1 m:33 3 m:87 5 m:142	1 m:18 3 m:49 5 m:80	1 m:18 3 m:49 5 m:80		1 m:33 3 m:87 5 m:142	1 m:18 3 m:49 5 m:80	1 m:18 3 m:49 5 m:80				1 m:33 3 m:87 5 m:142			1 m:61 3 m:166 5 m:272

*1 : Refer to Ending Page 1 for detailed switch specifications and dimensions.
*2 : Switches other than the above models, such as switches with connectors, are also available. Refer to Ending Page 1.
*3 : The max. load current is 20 mA at 25°C. The current is lower than 20 mA if the operating ambient temperature around the switch is higher than 25˚C. (5 to 10 mA at 60°C)
*4 : AC magnetic field proof switch (T2YD/T2YDT) cannot be used in DC magnetic field.

Cylinder weight table (the weight of the switches is when there are 2 cylinder switches.)

● No switch

(Unit: g)

Stroke (mm) / Bore size (mm)	5	10	15	20	25	30	35	40	45	50	75	100
ø12	49	58	67	76	85	95						
ø16	61	74	86	99	111	124						
ø20	90	105	120	135	150	165	179	194	209	224		
ø25	117	135	153	171	189	207	225	243	261	279		
ø32	170	194	218	242	266	290	314	338	362	386	576	740
ø40	245	274	303	331	360	389	418	446	475	504	742	934
ø50		464	510	556	603	649	695	741	787	833	1206	1488
ø63		738	802	866	930	994	1058	1122	1185	1249	1794	2168
ø80		1336	1434	1533	1632	1730	1829	1928	2026	2125	2971	3525
ø100		2028	2154	2279	2405	2531	2657	2782	2908	3034	4163	4859

● With switch

Stroke (mm) / Bore size (mm)	5	10	15	20	25	30	35	40	45	50	75	100
ø12	92	101	110	119	127	136						
ø16	107	119	132	144	156	169						
ø20	155	173	190	208	226	243	261	279	296	314		
ø25	208	226	244	262	280	298	316	334	352	370		
ø32	284	308	332	356	380	404	428	452	476	500	620	740
ø40	388	417	446	474	503	532	561	589	618	647	791	934
ø50		658	704	750	797	843	889	935	981	1027	1257	1488
ø63		1017	1081	1145	1209	1273	1337	1401	1464	1528	1848	2168
ø80		1749	1847	1946	2045	2143	2242	2341	2439	2538	3031	3525
ø100		2595	2721	2846	2972	3098	3224	3349	3475	3601	4230	4859

Theoretical thrust table

(Unit: N)

Bore size (mm)	Operating direction	Working pressure MPa										
		0.1	0.15	0.2	0.3	0.4	0.5	0.6	0.7	0.8	0.9	1.0
ø12	Push	-	17.0	22.6	33.9	45.2	56.5	67.9	79.2	90.5	1.02×10^2	1.13×10^2
	Pull	-	12.7	17.0	25.4	33.9	42.4	50.9	59.4	67.9	76.3	84.8
ø16	Push	-	30.2	40.2	60.3	80.4	1.01×10^2	1.21×10^2	1.41×10^2	1.61×10^2	1.81×10^2	2.01×10^2
	Pull	-	22.6	30.2	45.2	60.3	75.4	90.5	1.06×10^2	1.21×10^2	1.36×10^2	1.51×10^2
ø20	Push	-	47.1	62.8	94.2	1.26×10^2	1.57×10^2	1.88×10^2	2.20×10^2	2.51×10^2	2.83×10^2	3.14×10^2
	Pull	-	35.3	47.1	70.7	94.2	1.18×10^2	1.41×10^2	1.65×10^2	1.88×10^2	2.12×10^2	2.36×10^2
ø25	Push	-	73.6	98.2	1.47×10^2	1.96×10^2	2.45×10^2	2.95×10^2	3.44×10^2	3.93×10^2	4.42×10^2	4.91×10^2
	Pull	-	56.7	75.6	1.13×10^2	1.51×10^2	1.89×10^2	2.27×10^2	2.64×10^2	3.02×10^2	3.40×10^2	3.78×10^2
ø32	Push	80.4	1.21×10^2	1.61×10^2	2.41×10^2	3.22×10^2	4.02×10^2	4.83×10^2	5.63×10^2	6.43×10^2	7.24×10^2	8.04×10^2
	Pull	60.3	90.5	1.21×10^2	1.81×10^2	2.41×10^2	3.02×10^2	3.62×10^2	4.22×10^2	4.83×10^2	5.43×10^2	6.03×10^2
ø40	Push	1.26×10^2	1.88×10^2	2.51×10^2	3.77×10^2	5.03×10^2	6.28×10^2	7.54×10^2	8.80×10^2	1.01×10^3	1.13×10^3	1.26×10^3
	Pull	1.06×10^2	1.58×10^2	2.11×10^2	3.17×10^2	4.22×10^2	5.28×10^2	6.33×10^2	7.39×10^2	8.44×10^2	9.50×10^2	1.06×10^3
ø50	Push	1.96×10^2	2.95×10^2	3.93×10^2	5.89×10^2	7.85×10^2	9.82×10^2	1.18×10^3	1.37×10^3	1.57×10^3	1.77×10^3	1.96×10^3
	Pull	1.65×10^2	2.47×10^2	3.30×10^2	4.95×10^2	6.60×10^2	8.25×10^2	9.90×10^2	1.15×10^3	1.32×10^3	1.48×10^3	1.65×10^3
ø63	Push	3.12×10^2	4.68×10^2	6.23×10^2	9.35×10^2	1.25×10^3	1.56×10^3	1.87×10^3	2.18×10^3	2.49×10^3	2.81×10^3	3.12×10^3
	Pull	2.80×10^2	4.20×10^2	5.61×10^2	8.41×10^2	1.12×10^3	1.40×10^3	1.68×10^3	1.96×10^3	2.24×10^3	2.52×10^3	2.80×10^3
ø80	Push	5.03×10^2	7.54×10^2	1.01×10^3	1.51×10^3	2.01×10^3	2.51×10^3	3.02×10^3	3.52×10^3	4.02×10^3	4.52×10^3	5.03×10^3
	Pull	4.54×10^2	6.80×10^2	9.07×10^2	1.36×10^3	1.81×10^3	2.27×10^3	2.72×10^3	3.17×10^3	3.63×10^3	4.08×10^3	4.54×10^3
ø100	Push	7.85×10^2	1.18×10^3	1.57×10^3	2.36×10^3	3.14×10^3	3.93×10^3	4.71×10^3	5.50×10^3	6.28×10^3	7.07×10^3	7.85×10^3
	Pull	7.15×10^2	1.07×10^3	1.43×10^3	2.14×10^3	2.86×10^3	3.57×10^3	4.29×10^3	5.00×10^3	5.72×10^3	6.43×10^3	7.15×10^3

SCP*3
CMK2
CMA2
SCM
SCG
SCA2
SCS2
CKV2
CAV2/COVP/N2
SSD2
SSG
SSD
CAT
MDC2
MVC
SMG
MSD/MSDG
FC*
STK
SRL3
SRG3
SRM3
SRT3
MRL2
MRG2
SM-25
ShkAbs
FJ
FK
Spd Contr
Ending

How to order

No switch (without magnet for switch)

SSG - 12 D - 10

With switch (built-in magnet for switch)

SSG-L - 12 D - 10 - T2H - R

2-color LED/off-delay, with T1* switch (ø12/ø16 only)

SSG-L1 - 12 D - 10 - T2YH - R

Ⓐ Model No.

Ⓑ Bore size

Ⓒ Cushion

Ⓓ Stroke
Custom stroke Available in 1 mm increments. (Less than 5 mm with switch is not available) Note that the dimensions of the total length with the custom stroke are the same as the longer standard stroke.

Ⓔ Switch model No.

Ⓕ Switch quantity

Code	Description
Ⓐ Model No.	
SSG	Double acting/single rod
SSG-L	Double acting/single rod/with switch
SSG-L1	ø12, ø16 2-color LED, off-delay, with T1* switch
Ⓑ Bore size (mm)	
12	ø12
16	ø16
20	ø20
25	ø25
32	ø32
40	ø40
50	ø50
63	ø63
80	ø80
100	ø100
Ⓒ Cushion	
Blank	Without cushion
D	With two-sided rubber cushion

Ⓓ Stroke (mm)

		Bore size (ø)									
		12	16	20	25	32	40	50	63	80	100
5	5	●	●	●	●	●	●				
10	10	●	●	●	●	●	●	●	●	●	●
15	15	●	●	●	●	●	●	●	●	●	●
20	20	●	●	●	●	●	●	●	●	●	●
25	25	●	●	●	●	●	●	●	●	●	●
30	30	●	●	●	●	●	●	●	●	●	●
35	35			●	●	●	●	●	●	●	●
40	40			●	●	●	●	●	●	●	●
45	45			●	●	●	●	●	●	●	●
50	50			●	●	●	●	●	●	●	●
75	75					●	●	●	●	●	●
100	100					●	●	●	●	●	●

Ⓔ Switch model No.

Axial lead wire		Contact	Voltage AC	Voltage DC	Indicator	Lead wire	Bore size 12	16	20	25	32	40	50	63	80	100
-	F2S*	Proximity		●	1-color LED	2-wire				●						
-	F3S*	Proximity		●	1-color LED	3-wire				●						
F2H*	F2V*	Proximity		●	1-color LED	2-wire				●						
F3H*	F3V*	Proximity		●	1-color LED	3-wire				●						
F3PH*	F3PV*	Proximity		●	1-color LED (PNP output) (custom)	3-wire				●						
F2YH*	F2YV*	Proximity		●	2-color LED	2-wire				●						
F3YH*	F3YV*	Proximity		●	2-color LED	3-wire				●						
T0H*	T0V*	Reed	●	●	1-color LED	2-wire	●	●	●	●	●	●	●	●	●	●
T5H*	T5V*	Reed	●	●	No indicator lamp	2-wire	●	●	●	●	●	●	●	●	●	●
T8H*	T8V*	Reed	●	●	1-color LED	2-wire						●	●	●	●	●
T1H*	T1V*	Proximity	●		1-color LED	2-wire	●	●	●	●	●	●	●	●	●	●
T2H*	T2V*	Proximity		●	1-color LED	2-wire	●	●	●	●	●	●	●	●	●	●
T3H*	T3V*	Proximity		●	1-color LED	3-wire	●	●	●	●	●	●	●	●	●	●
T3PH*	T3PV*	Proximity		●	1-color LED (PNP output)	3-wire	●	●	●	●	●	●	●	●	●	●
T2YH*	T2YV*	Proximity		●	2-color LED	2-wire	●	●	●	●	●	●	●	●	●	●
T2WH*	T2WV*	Proximity		●	2-color LED	2-wire	●	●	●	●	●	●	●	●	●	●
T3YH*	T3YV*	Proximity		●	2-color LED	3-wire	●	●	●	●	●	●	●	●	●	●
T3WH*	T3WV*	Proximity		●	2-color LED	3-wire	●	●	●	●	●	●	●	●	●	●
T2YD*	-	Proximity		●	2-color LED AC magnetic field	2-wire			●	●	●	●	●	●	●	●
T2YDT*	-	Proximity		●	2-color LED AC magnetic field	2-wire			●	●	●	●	●	●	●	●
T2JH*	T2JV*	Proximity		●	1-color LED off-delay	2-wire	●	●	●	●	●	●	●	●	●	●

*** Lead wire length**	
Blank	1 m (standard)
3	3 m (option)
5	5 m (option) * T-switch only. The F-switch can be configured for up to 3 m.

Ⓕ Switch quantity	
R	1 on rod side
H	1 on head side
D	2
T	3

Precautions for model No. selection

1 : The T0 and T5* switches cannot be mounted on the 5 mm stroke of the ø12 and ø16 bore sizes.
2 : The T2YD switch cannot be mounted on the ø12 and ø16 bore sizes.
3 : The T8 switch cannot be mounted on the ø12 to ø32 bore sizes.
*4 : The F-switch can only be mounted on the piping port surface of bore size ø25.
*5 : Switches are shipped with the product. Contact CKD if assembling before shipment is necessary.

[Example of model No.]

SSG-L-12D-10-T2H-R

Model: Guided compact cylinder
Double acting/single rod

- Model No. : Double acting/single rod with switch
- Bore size : ø12 mm
- Cushion : Two-sided rubber cushion
- Stroke : 10 mm
- Switch model No. : Proximity switch T2H, lead wire length 1 m
- Switch quantity : 1 on rod side

How to order switch

SW - T0H

Switch model No.
(Item Ⓔ above)

Internal structure and parts list (ø12 to ø50) (without cushion)

● SSG-L-12 to 25 (double acting/with switch)

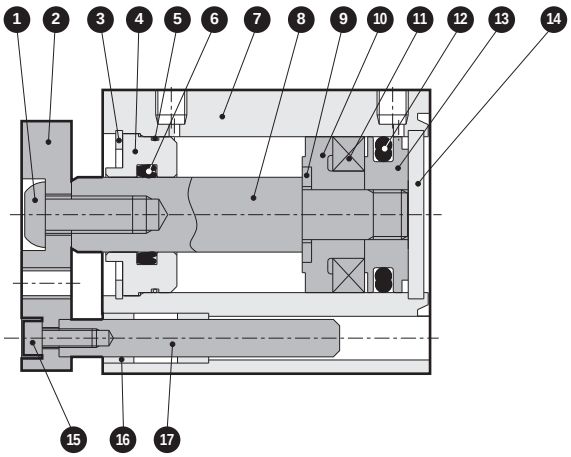

● SSG-L-32 to 50 (double acting/with switch)

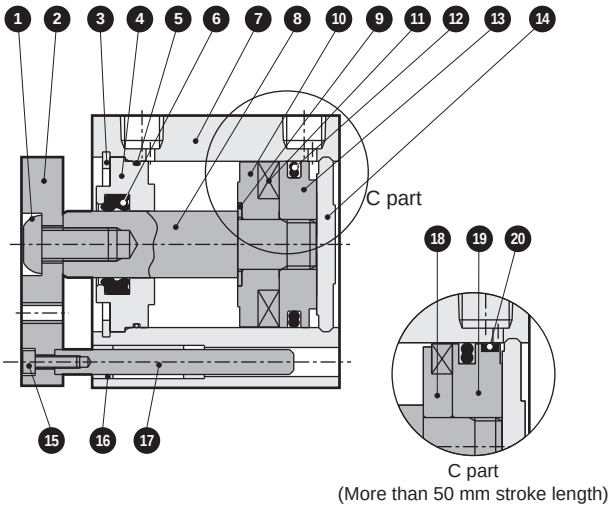

● SSG-12 to 25 (double acting)

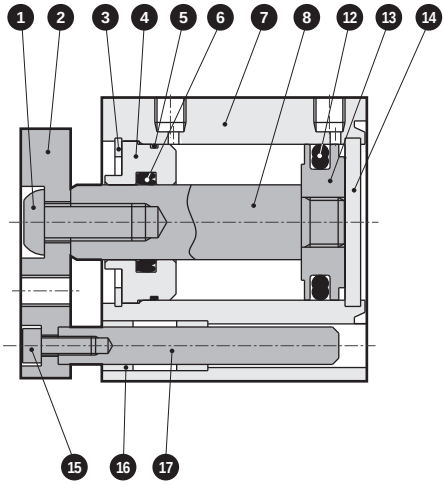

● SSG-32 to 50 (double acting)

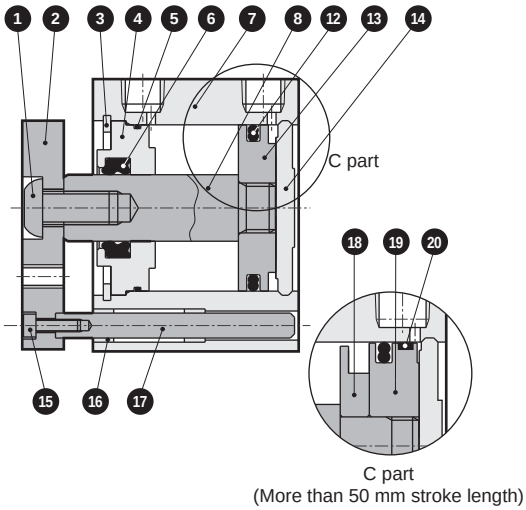

Cannot be disassembled

No.	Part name	Material	Remarks
1	Hexagon socket head cap screw (ø12)	Alloy steel	Zinc chromate
	Hex socket button head bolt (ø16-50)	Alloy steel	Zinc chromate
2	End plate	Aluminum alloy	Alumite
3	C-snap ring	Steel	Phosphate coating
4	Rod metal	Special aluminum alloy	Alumite
5	O-ring	Nitrile rubber	
6	Rod packing	Nitrile rubber	
7	Body	Aluminum alloy	Hard alumite
8	Piston rod	Stainless steel (ø12 to ø25)	ø16 to ø25: Industrial chrome plating
		Steel (ø32 to ø50)	Industrial chrome plating
9	Spacer washer	Stainless steel	ø20 to 50
10	Spacer	Stainless steel (ø12)	
		Special resin (ø16 to ø50)	

No.	Part name	Material	Remarks
11	Magnet	Plastic	
12	Piston packing	Nitrile rubber	
13	Piston	Aluminum alloy	Chromate
14	Cover	Stainless steel (ø12 to ø25)	Alumite
		Aluminum alloy (ø32 to ø50)	Alumite
15	Hexagon socket head cap screw	Alloy steel	Zinc chromate
16	Metal	Oil impregnated bearing alloy	
17	Guide rod	Stainless steel	ø12 to ø50: Industrial chrome plating
18	Spacer	Aluminum alloy	Chromate
19	Piston	Aluminum alloy	Chromate
20	Wear ring	Acetal resin	

SCP*3
CMK2
CMA2
SCM
SCG
SCA2
SCS2
CKV2
CAV2/ COVP/N2
SSD2
SSG
SSD
CAT
MDC2
MVC
SMG
MSD/ MSDG
FC*
STK
SRL3
SRG3
SRM3
SRT3
MRL2
MRG2
SM-25
ShkAbs
FJ
FK
Spd Contr
Ending

Internal structure and parts list (ø63 to 100) (no cushion)

● SSG-L-63 to 100 (double acting/with switch)

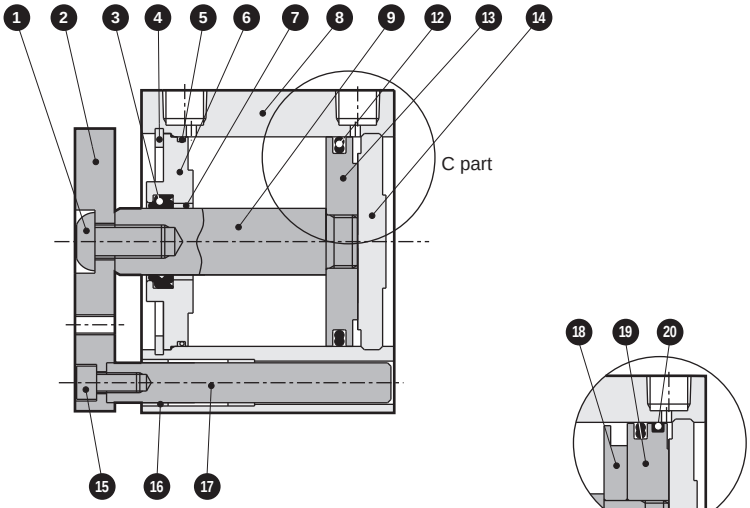

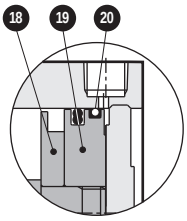

C part
(More than 50 mm stroke length)

● SSG-63 to 100 (double acting)

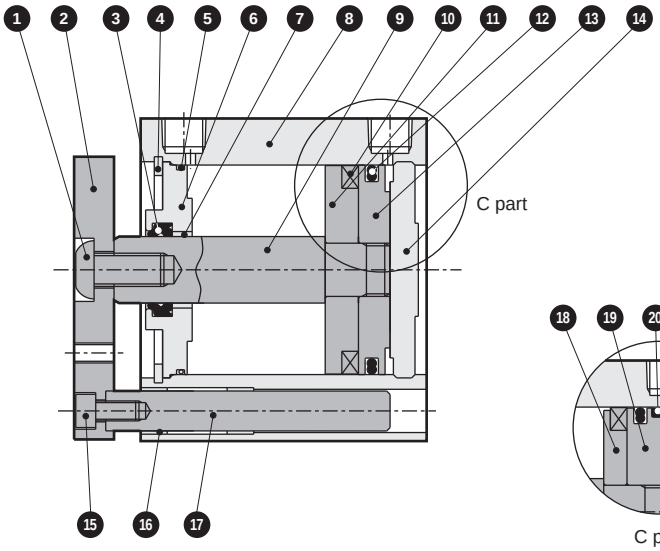

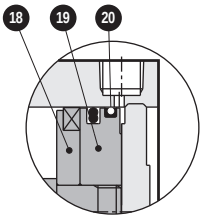

C part
(More than 50 mm stroke length)

Cannot be disassembled

No.	Part name	Material	Remarks	No.	Part name	Material	Remarks
1	Hexagon socket button head bolt	Alloy steel	Zinc chromate	11	Spacer	Aluminum alloy	Chromate
2	End plate	Aluminum alloy	Alumite	12	Piston packing	Nitrile rubber	
3	Rod packing	Nitrile rubber		13	Piston	Aluminum alloy	Chromate
4	C-snap ring	Steel	Phosphate coating	14	Cover	Aluminum alloy	Alumite
5	O-ring	Nitrile rubber		15	Hexagon socket head cap screw	Alloy steel	Zinc chromate
6	Rod metal	Aluminum alloy	Chromate	16	Metal	Oil impregnated bearing alloy	
7	Bush	Oiles drymet		17	Guide rod	Steel	Industrial chrome plating
8	Body	Aluminum alloy	Hard alumite	18	Spacer	Aluminum alloy	Chromate
9	Piston rod	Steel	Industrial chrome plating	19	Piston	Aluminum alloy	Chromate
10	Magnet	Plastic		20	Wear ring	Polyacetal resin	

Internal structure and parts list (ø12 to ø32) (with rubber cushion)

● SSG-L-12D (double acting/with switch)

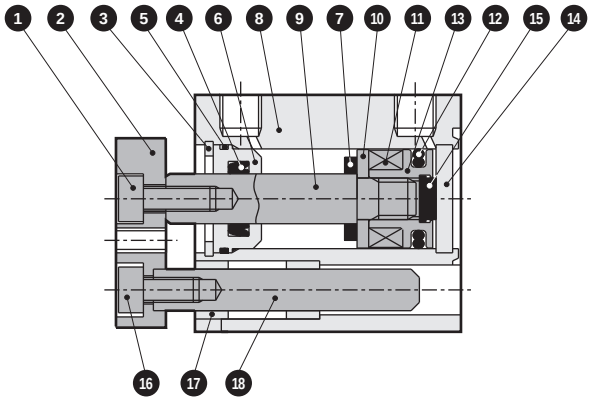

● SSG-L-16D to 32D (double acting/with switch)

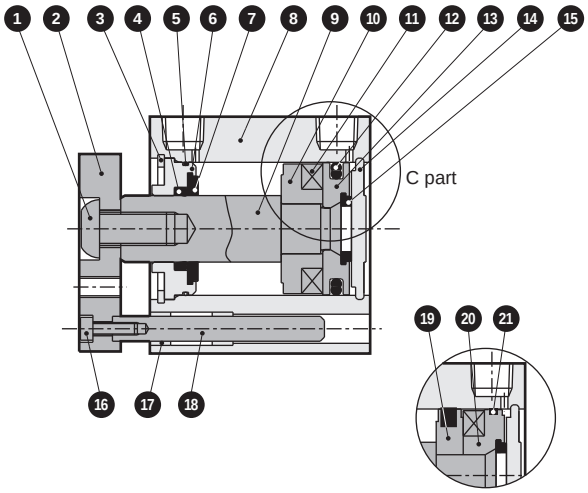

C part
(32 with more than 50 mm stroke length only)

● SSG-12D (double acting)

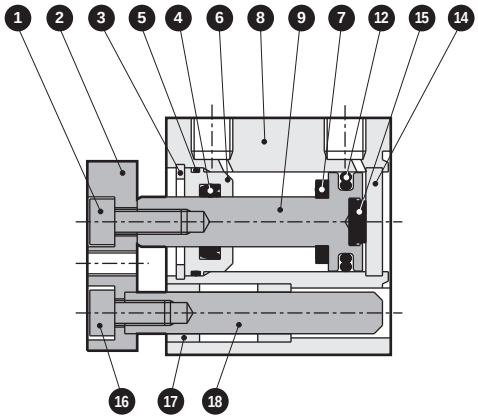

● SSG-16D to 32D (double acting)

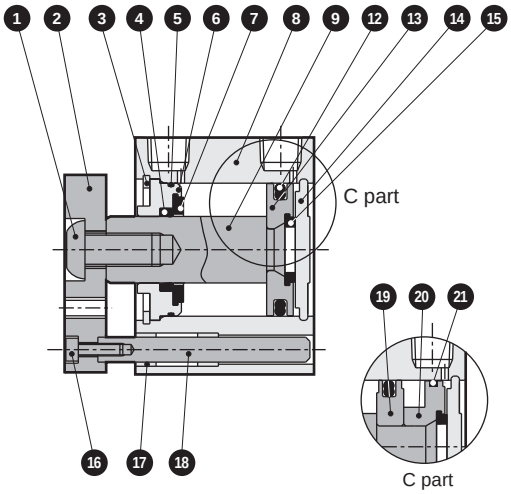

C part
(32 with more than 50 mm stroke length only)

Cannot be disassembled

No.	Part name	Material	Remarks
1	Hexagon socket head cap screw (ø12)	Alloy steel	Zinc chromate
	Hex socket button head bolt (ø16-32)		
2	End plate	Aluminum alloy	Alumite
3	C-snap ring	Steel	Phosphate coating
4	Rod packing	Nitrile rubber	
5	O-ring	Nitrile rubber	
6	Rod metal	Special aluminum alloy	Alumite
7	Cushion rubber	Urethane rubber	
8	Body	Aluminum alloy	Hard alumite
9	Piston rod	Stainless steel (ø12)	
		Steel (ø16 to ø32)	Industrial chrome plating
10	Spacer	Stainless steel (ø12)	
		Aluminum alloy (ø16 to ø32)	

No.	Part name	Material	Remarks
11	Magnet	Plastic	
12	Piston packing	Nitrile rubber	
13	Piston	Aluminum alloy	Chromate
14	Cover	Stainless steel (ø12)	
		Aluminum alloy (ø16 to ø32)	Alumite
15	Cushion rubber	Urethane rubber	
16	Hexagon socket head cap screw	Alloy steel	Zinc chromate
17	Metal	Oil impregnated bearing alloy	
18	Guide rod	Stainless steel	Industrial chrome plating (ø16 to ø32)
19	Spacer	Aluminum alloy	Chromate
20	Piston	Aluminum alloy	Chromate
21	Wear ring	Polyacetal resin	

Internal structure and parts list (ø40 to ø100) (with rubber cushion)

● SSG-L-40D, 50D (double acting/with switch)

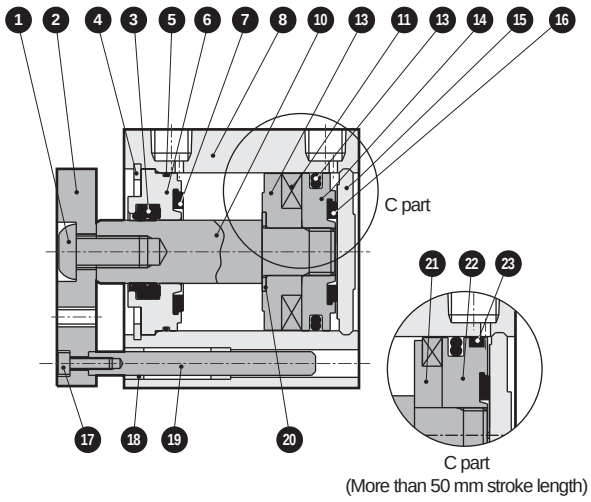

● SSG-L-63D to 100D (double acting/with switch)

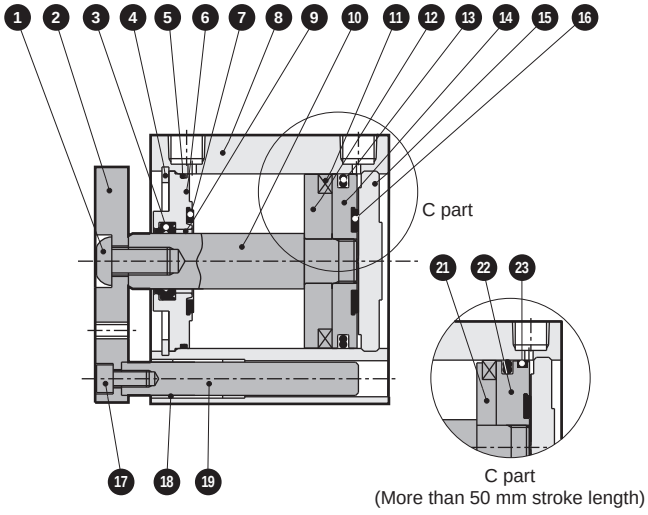

● SSG-40D, 50D (double acting)

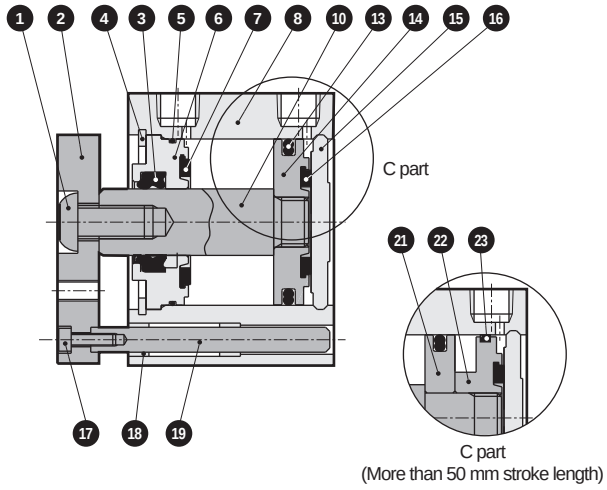

● SSG-63D to 100D (double acting)

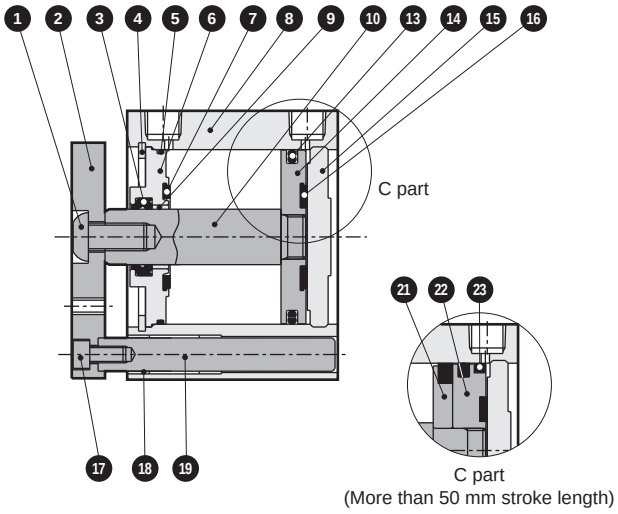

Cannot be disassembled

No.	Part name	Material	Remarks
1	Hexagon socket button head bolt	Alloy steel	Zinc chromate
2	End plate	Aluminum alloy	Alumite
3	Rod packing	Nitrile rubber	
4	C-snap ring	Steel	Phosphate coating
5	O-ring	Nitrile rubber	
6	Rod metal	Special aluminum alloy (ø40/ø50)	Alumite
		Aluminum alloy (ø63 to ø100)	Chromate
7	Cushion rubber	Urethane rubber	
8	Body	Aluminum alloy	Hard alumite
9	Bush	Oiles drymet	
10	Piston rod	Steel	Industrial chrome plating
11	Magnet	Plastic	
12	Spacer	Aluminum alloy	Chromate

No.	Part name	Material	Remarks
13	Piston packing	Nitrile rubber	
14	Piston	Aluminum alloy	Chromate
15	Cover	Aluminum alloy	Alumite
16	Cushion rubber	Urethane rubber	
17	Hexagon socket head cap screw	Alloy steel	Zinc chromate
18	Metal	Oil impregnated bearing alloy	
19	Guide rod	Stainless steel	Industrial chrome plating
		Steel	
20	Spacer washer	Stainless steel	
21	Spacer	Aluminum alloy	Chromate
22	Piston	Aluminum alloy	Chromate
23	Wear ring	Polyacetal resin	

Dimensions

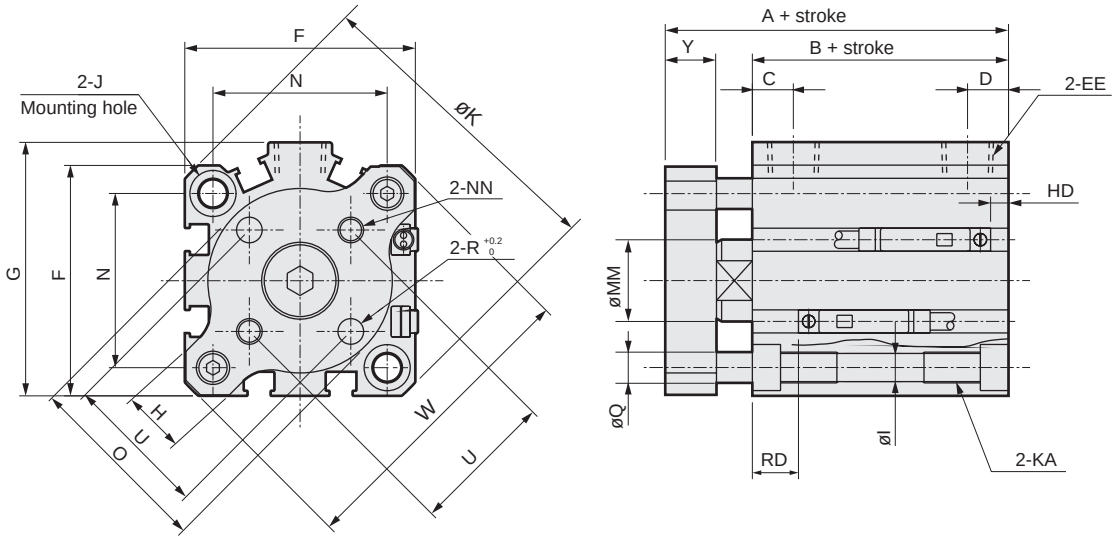

● Precautions regarding the switch mounting groove
*1 : Bore sizes ø12 to 20 do not have a switch groove on the piping port surface.
*2 : Bore sizes ø12 and 16 have only one switch groove on each surface.
*3 : The piping port surface of bore size ø25 can only mount an F-switch.

Code	No switch		With switch		Common dimensions												
Bore size	A *5	B *5	A *6	B *6	C *4	D *4	EE	F	G	H	I	J	K	KA	MM	N	NN
ø12	26.5	17	31.5(36.5)	22(27)	5.5	5.5	M5	25	-	8.5	3.5	6.5 spot face depth 3.5	32	M4 depth 7	6	15.5	M3
ø16	26.5	17	31.5(36.5)	22(27)	5.5	5.5	M5	29	-	9	3.5	6.5 spot face depth 3.5	38	M4 depth 7	8	20	M3
ø20	32	19.5	42	29.5	8	5.5	M5	36	-	10	5.5	9 spot face depth 5.5	47	M6 depth 11	10	25.5	M4
ø25	35.5	22.5	45.5	32.5	11	6	M5	40	-	11	5.5	9 spot face depth 5.5	51	M6 depth 11	12	28	M5
ø32	40(50)	23(33)	50	33	8(10)	8(5.5)	Rc1/8 *3	45	49.5	12	5.5	9 spot face depth 5.5	60	M6 depth 11	16	34	M5
ø40	46.5(56.5)	29.5(39.5)	56.5	39.5	12(11.5)	8.5(8)	Rc1/8	52	57	12	5.5	9 spot face depth 5.5	69	M6 depth 11	16	40	M5
ø50	50.5(60.5)	30.5(40.5)	60.5	40.5	10.5	10.5	Rc1/4	64	71	15	6.9	11 spot face depth 6.5	86	M8 depth 13	20	50	M6
ø63	56(66)	36(46)	66	46	13	11	Rc1/4	77	84	18	8.7	14 spot face depth 9	103	M10 depth 25	20	60	M6
ø80	67.5(77.5)	43.5(53.5)	77.5	53.5	16	13	Rc3/8	98	104	22	10.5	17.5 spot face depth 11	132	M12 depth 28	25	77	M8
ø100	79(89)	53(63)	89	63	23	15	Rc3/8	117	123.5	22	10.5	17.5 spot face depth 11	156	M12 depth 28	30	94	M10

Code	Common dimensions						With switch (reed/proximity 1-color)		With switch (proximity 2-color)		With switch (T8)		With switch (T2/3W)	
Bore size	O	Q	R	U	Y	W	HD *5, *7	RD *5, *7	HD *5, *7	RD *5, *7	HD *5	RD *5	HD *5	RD *5
ø12	15	5	3	10±0.1	6	31	0	2.5	4.5	1	-	-	7.5	4
ø16	19	5	3	14±0.1	6	37	0	2	4.5	0.5	-	-	7.5	3.5
ø20	26	6	4	17±0.1	8	46	3	6.5	1.5	5	-	-	4.5	8
ø25	30	6	5	22±0.1	8	50	3(8.5)	9.5(14)	1.5(8.5)	8(14)	-	-	4.5	11
ø32	36	6	5	28±0.2	10	59	3.5(2)	9(10.5)	2(0.5)	7.5(9)	-	-	5(3.5)	10.5(13)
ø40	42	6	5	33±0.2	10	68	7(4.5)	12(14.5)	5.5(3)	10.5(13)	1(0)	6(8.5)	8.5(6)	13.5(16)
ø50	54	8	6	42±0.2	12	85	7.5(10.5)	12.5(9.5)	6(9)	11(8)	1.5(4.5)	6.5(3.5)	9(12)	14(11)
ø63	68	12	6	50±0.2	12	102	12.5(15.5)	13(10)	11(14)	11.5(8.5)	6.5(9.5)	7(4)	14(17)	14.5(11.5)
ø80	88	14	8	65±0.2	14	131	17.5(21)	15.5(12)	16(19.5)	14(10.5)	11.5(15)	9.5(6)	19(22.5)	17(13.5)
ø100	106	14	10	80±0.2	16	155	23(26.5)	19.5(16)	21.5(25)	18(14.5)	17(20.5)	13.5(10)	24.5(28)	21(17.5)

*1 : To calculate A+ stroke or B+ stroke when using custom stroke, apply the next longer standard stroke (instead of the custom stroke) to the stroke value.
(Example) If the custom stroke is 7 mm, apply the standard stroke of 10 mm.
*2 : HD and RD dimensions for 5 mm stroke differ from these dimensions by production lot.
*3 : The ø32 bore size with a 5 mm stroke and without a switch has a port size of M5.*4 : Dimensions in ( ) of codes C and D are when the value is for a 5 mm stroke without switch.
*5 : Dimensions in ( ) of codes A, B, HD, and RD are values for 75/100 mm stroke.
*6 : Dimensions in ( ) of codes A and B are values for the 2-color LED with switch (L1)
*7 : Dimensions in ( ) of codes HD and RD are values for units with F-switch. (The F-switch can only be mounted on the piping port surface.)

SCP*3
CMK2
CMA2
SCM
SCG
SCA2
SCS2
CKV2
CAV2/ COVP/N2
SSD2
SSG
SSD
CAT
MDC2
MVC
SMG
MSD/ MSDG
FC*
STK
SRL3
SRG3
SRM3
SRT3
MRL2
MRG2
SM-25
ShkAbs
FJ
FK
Spd Contr
Ending

How to order mounting bolts

How to order

SSD - BOLT - dxL Refer to the following table for “d” and “L”.

Note) Although these will be shipped in units of 4 bolts per set, use with this product will only require 2 bolts.

Example) For SSG-L-32D-30 ... SSD-BOLT-M5X65

Bore size	ℓ	d	L		
			50 stroke or less		75/100 stroke
			No switch	With switch	
ø12/16	6.5	M3	20 + stroke	25 + stroke (*1)	
ø20	6	M5	20 + stroke	25 + stroke	
ø25	8	M5	25 + stroke	35 + stroke	
ø32	7.5	M5	25 + stroke	35 + stroke	35 + stroke
ø40	6	M5	30 + stroke	40 + stroke	40 + stroke
ø50	11	M6	35 + stroke	45 + stroke	45 + stroke
ø63	13	M8	40 + stroke	50 + stroke	50 + stroke
ø80	17.5	M10	50 + stroke	60 + stroke	60 + stroke
ø100	18	M10	60 + stroke	70 + stroke	70 + stroke

*1 : For SSG-L1, this is “30 + stroke”.

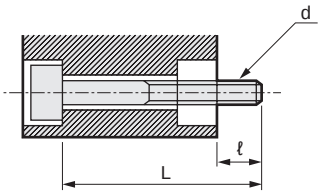

Material: Steel
Treatment: Black finish

d: Mounting bolt screw diameter
L: Mounting bolt length
ℓ : Mating side screw-in available length
(Note) The mounting bolts will be displayed as d x L.

Allowable lateral load

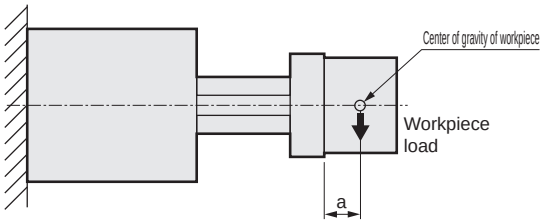

ø12 to ø40

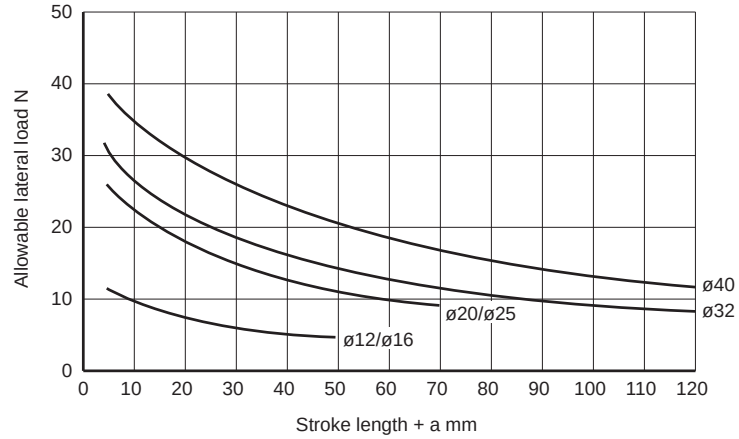

ø50 to ø100

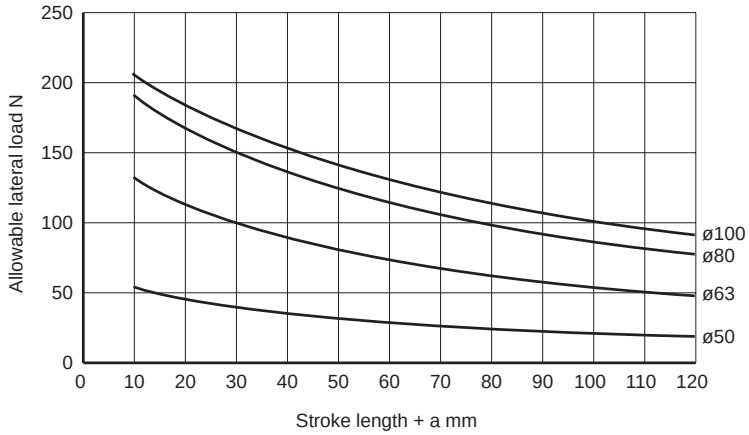

The allowable lateral load is a value for when the load is acting on the end surface of the end plate. When the center of gravity of the workpiece mounted on the end plate will be moved, substitute this distance for the stroke before selection.

Allowable torque

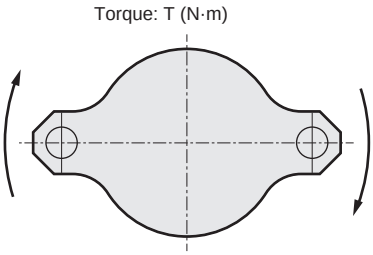

Unit: N·m

Bore size (mm)	Stroke							
	5	10	20	30	40	50	75	100
12	0.12	0.10	0.080	0.066				
16	0.16	0.13	0.10	0.085				
20	0.40	0.35	0.28	0.23	0.20	0.17		
25	0.44	0.38	0.31	0.25	0.22	0.19		
32	0.69	0.62	0.51	0.43	0.38	0.33	0.26	0.21
40	1.1	0.99	0.83	0.72	0.63	0.57	0.45	0.37
50		1.9	1.6	1.4	1.2	1.1	0.87	0.73
63		4.3	3.7	3.3	2.9	2.6	2.1	1.8
80		7.9	6.9	6.2	5.6	5.1	4.2	3.6
100		12	11	9.9	9.0	8.3	6.9	5.9

Non-rotating accuracy (reference value)

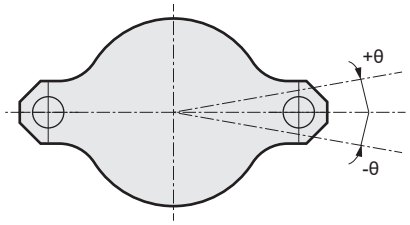

Bore size (mm)	Non-rotating accuracy θ (degrees)
ø12/16	±0.2
ø20/25/32/40	±0.1
ø50/63/80/100	±0.08

(Default value during PULL)
Note: Excluding sag of guide rod

Pneumatic components

Safety Precautions

Be sure to read this section before use.

Refer to Intro Page 73 for general information of the cylinder, and to Intro Page 80 for general information of the cylinder switch.

Design/selection

⚠ CAUTION

■ Use within the allowable load.
Exceeding the allowable lateral load or allowable torque may cause damage, etc. Refer to the Technical data on page 1077.

■ Do not use as a stopper.
Use this product in applications that are not subject to lateral loads with impact, such as pushers and lifters.

■ When the unit is going to be used by pressing down on the cylinder part-way in the stroke, be sure to apply thrust on the end plate towards the piston rod axis direction. When the unit is going to be used by pressing down on the cylinder with a clamp, etc., part-way in the stroke, thrust will work on the end plate so that eccentric pressure may lead to damage of parts. Use at the piston rod shaft core as in the figure below.

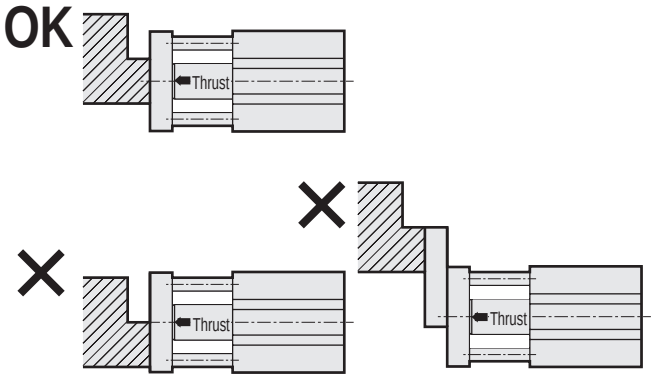

Mounting, installation and adjustment

⚠ CAUTION

■ The cylinder switch may malfunction if there is a magnetic substance such as a metal plate installed adjacently. Confirm that a distance of at least 10 mm is allocated from the surface of the cylinders.
(Same for all bore sizes)

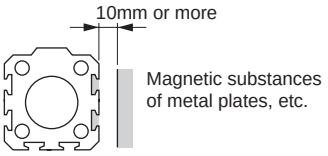

■ The cylinder switch may malfunction if cylinders are installed adjacently. Check that the following distances are allocated between cylinders. (Same for all bore sizes)

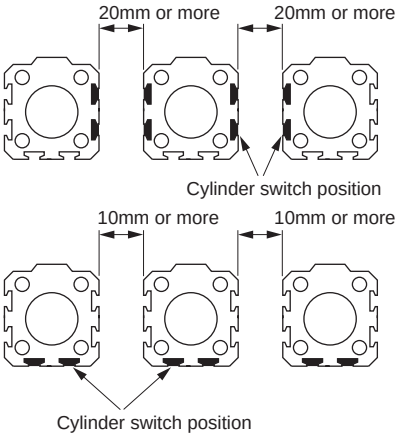

■ Be sure to attach a speed controller during piping before use. As compatible piping fittings are limited, refer to the table below to select the fitting.

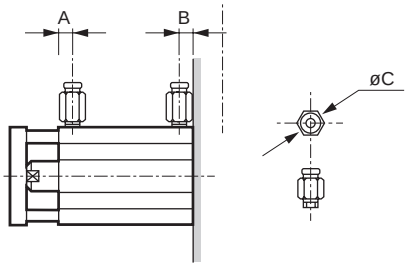

Item / Bore size (mm)	Port size	Port position A	Port position B	Applicable fittings	Fitting O.D. øC	Inapplicable fittings
ø12	M5	5.5	5.5	SC3W-M5-4 SC3W-M5-6 GWS4-M5-S GWS4-M5 GWL4-M5 GWL6-M5	ø11 or less	GWS6-M5
ø16						
ø20		8	5.5			
ø25		11	6			
ø32	Rc1/8 *1	8	8	SC3W-6-4, 6, 8 GWS4-6 GWS6-6 GWS8-6 GWL4-6 GWL6-6	ø15 or less	GWS10-6 GWL8-6 GWL10-6
ø40		12	8.5			
ø50	Rc1/4	10.5	10.5	SC3W-8-6, 8, 10 GWS4-8 GWS6-8 GWS10-8 GWL4 to 12-8	ø21 or less	GWS12-8
ø63		13	11			
ø80	Rc3/8	16	13	SC3W-10-6, 8, 10 GWS6-10 GWS8-10 GWS10-10 GWL6 to 12-10	ø21 or less	—
ø100		23	15			

*1 : The ø32 bore size with a 5 mm stroke and without a switch has a port size of M5. Refer to the dimensions for the port dimensions.

Mounting, installation and adjustment

⚠ CAUTION

■ Do not damage surface flatness by denting or scratching the end plate surface.
Make sure that the flatness of the mating surface where the end plate will be attached is 0.05mm or below.

■ Allowable absorbed energy value
Use this cushion within the range of the allowable absorbed energy. When the unit will be used where the allowable absorbed energy will be exceeded, provide a separate external shock absorber.
For details on the allowable absorbed energy value, refer to the field for specifications.

Use/maintenance

⚠ CAUTION

■ Do not disassemble the product. Once disassembled, the performance may not be retained.

SSD

Compact cylinder

ø12/ø16/ø20/ø25/ø32/ø40/ø50/ø63
ø80/ø100/ø125/ø140/ø160

Space saving structure

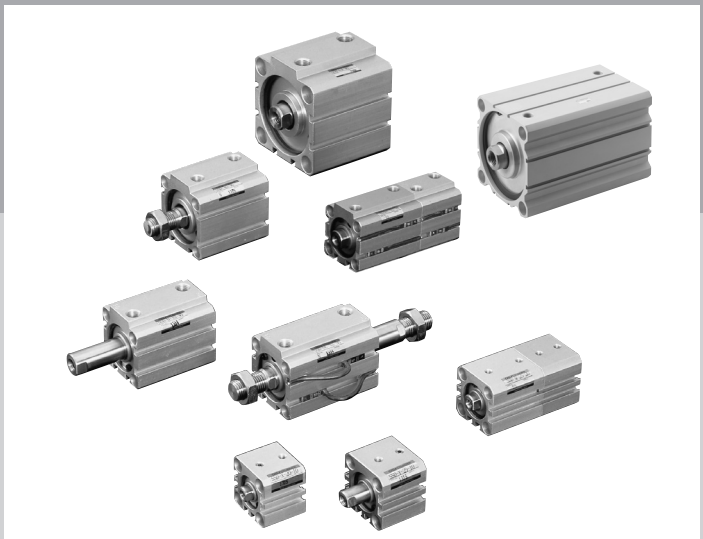

Overview

This is a square, space saving cylinder that integrates the cylinder switch into the body for shorter total length. Perform adjustment so that a lateral load is not applied to the cylinder before use.

Features

Space saving/square.
Female thread is provided as standard.

External mounting is possible with female thread attached to the end of the rod. In addition, the male thread is also available to widen the selection range.

All bore sizes miniature switch mountable

All bore sizes/all series miniature proximity/reed switch can be mounted. (excluding heat resistance)

Direct mounting

Can be mounted directly with hexagon socket head cap screw. Further, either through bolt or screw-in mounting can be selected.

The cylinder switches T2YH, T2YV, T3YH, and T3YV are scheduled for end of production at the end of December 2023.

CONTENTS

Series variation 1082
Variation and option combination selection table 1086
Product introduction and application examples 1092

- Double acting/single rod (SSD) 1094
- Double acting/single rod/high load (SSD-K) 1116
- Single acting/push (SSD-X) 1126
- Single acting/pull (SSD-Y) 1126
- Double acting/heat resistant (SSD-T) 1138
- Double acting/with heat resistant cylinder switch (SSD-T1L) 1142
- Double acting/high load/rubber-air cushioned (SSD-K- *C) 1150
- Double acting/position locking (SSD-Q) 1160
- Double acting/fine speed (SSD-F, SSD-KF) 1172
- Double acting/low speed (SSD-O) 1178
- Double acting/high load/low friction (SSD-KU) 1184
- Double acting/double rod (SSD-D) 1188
- Double acting/back to back (SSD-B) 1200
- Double acting/2-stage (SSD-W) 1210
- Double acting/rotation-stop (SSD-M) 1220
- Double acting/coolant proof (SSD-G2/G3) 1230
- Double acting/high load/coolant proof (SSD-KG2/KG3) 1238
- Double acting/coil scraper (SSD-G1)/anti-spatter adherence (SSD-G4) 1246
- Double acting/high load/coil scraper (SSD-KG1)/anti-spatter adherence (SSD-KG4) 1254
- Double acting/double rod/coil scraper (SSD-DG1)/anti-spatter adherence (SSD-DG4) 1264
- Double acting/single rod/environment-resistant scraper (SSD-G5) 1272
- Double acting/high load/environment-resistant scraper (SSD-KG5) 1280
- Double acting/single rod/strong magnetic field proof switch (SSD-L4) 1288
- Double acting/single rod/strong magnetic field proof switch, with coil scraper (SSD-G1L4) 1294
- Double acting/high load/strong magnetic field proof with switch (SSD-KL4) 1300
- Double acting/high load/with strong magnetic field proof switch, with coil scraper (SSD-KG1L4) 1306

SSD Series common switch dimensions 1312
Introduction of custom order products 1318
SSD Series common accessory dimensions 1108
List of mounting bolts 1326
⚠ Safety precautions 1334

Series variation

Compact cylinder SSD Series

* Refer to page 1084 for high load and type with strong magnetic field proof switch.

Variation	Model No. JIS symbol	Bore size (mm)	Standard stroke (mm)						
			5	10	15	20	25	30	40
Double acting/single rod with switch 2-color LED switch	SSD SSD-L SSD-L1	ø12/ø16	●	●	●	●	●	●	
		ø20/ø25/ø32/ø40/ø50	●	●	●	●	●	●	●
		ø63/ø80/ø100	●	●		●		●	●
		ø125/ø140/ø160		●		●		●	●
Single acting/push with switch 2-color LED switch	SSD-X SSD-XL SSD-XL1	ø12/ø16/ø20	●	●					
		ø25/ø32	●	●					
		ø40/ø50		●		●			
Single acting/pull with switch 2-color LED switch	SSD-Y SSD-YL SSD-YL1	ø12/ø16/ø20	●	●					
		ø25/ø32	●	●					
		ø40/ø50		●		●			
Double acting/heat resistant	SSD-T	ø12/ø16/ø20	●	●	●	●	●	●	
		ø25/ø32/ø40/ø50	●	●	●	●	●	●	●
		ø63/ø80/ø100	●	●		●		●	●
Double acting/with heat resistant cylinder switch	SSD-T1L	ø16		●	●	●	●	●	
		ø20			●	●	●	●	
		ø25			●	●	●	●	●
		ø32/ø40/ø50		●	●	●	●	●	●
		ø63		●		●		●	●
Double acting/position locking with switch	SSD-Q SSD-QL	ø16/ø20	●	●	●	●	●	●	●
		ø25/ø32/ø40/ø50		●	●	●	●	●	●
		ø63/ø80/ø100		●		●		●	●
Double acting/fine speed with switch 2-color LED switch	SSD-F SSD-LF SSD-L1F	ø12/ø16/ø20	●	●	●	●	●	●	
		ø25/ø32/ø40/ø50	●	●	●	●	●	●	●
		ø63/ø80/ø100	●	●		●		●	●
Double acting/low speed with switch 2-color LED switch	SSD-O SSD-OL SSD-OL1	ø12/ø16/ø20	●	●	●	●	●	●	
		ø25/ø32/ø40/ø50	●	●	●	●	●	●	●
		ø63/ø80/ø100	●	●		●		●	●
Double acting/double rod with switch	SSD-D SSD-DL	ø12/ø16/ø20	●	●	●	●	●	●	
		ø25/ø32/ø40/ø50	●	●	●	●	●	●	●
		ø63/ø80/ø100	●	●		●		●	●
		ø125/ø140/ø160		●		●		●	●
Double acting/back to back with switch	SSD-B SSD-BL SSD-BL1 (Indicator	ø12/ø16/ø20	●	●	●	●	●	●	
		ø25/ø32/ø40/ø50	●	●	●	●	●	●	●
		ø63/ø80/ø100	●	●		●		●	●
Double acting/2-stage with switch	SSD-W SSD-WL SSD-WL1 (Indicator	ø12/ø16/ø20	●	●	●	●	●	●	
		ø25/ø32/ø40/ø50	●	●	●	●	●	●	●
		ø63/ø80/ø100	●	●		●		●	●
Double acting/rotation-stop with switch 2-color LED switch	SSD-M SSD-ML SSD-ML1	ø12/ø16/ø20/ø25	●	●	●	●	●	●	
		ø32/ø40/ø50	●	●	●	●	●	●	●
		ø63	●	●		●		●	●
Double acting/coolant proof with switch	SSD-G2/G3 SSD-G2L/G3L	ø16/ø20	●	●	●	●	●	●	
		ø25/ø32/ø40/ø50	●	●	●	●	●	●	●
		ø63/ø80/ø100	●	●		●		●	●
Double acting/anti-spatter adherence with switch	SSD-G1/G4 SSD-G1L/G4L	ø25/ø32 ø40/ø50	●	●	●	●	●	●	●
		ø63/ø80/ø100	●	●		●		●	●
Double acting/double rod/anti-spatter adherence with switch	SSD-DG1/DG4 SSD-DG1L/DG4L	ø25/ø32 ø40/ø50	●	●	●	●	●	●	●
		ø63/ø80/ø100	●	●		●		●	●
Double acting/single rod with switch	SSD-G5 SSD-G5L	ø20/ø25/ø32 ø40/ø50	○	○	○	○	○	○	○
		ø63/ø80/ø100	○	○		○		○	○

●: Standard, ◎: Option, ○: Made to order, △: Available depending on conditions (contact CKD.) ; ▒: Not available

Standard stroke (mm)						Min. stroke (mm)	Max. stroke (mm)	Custom stroke (per mm)	Option			Mounting bracket						Switch	Page
									Rod end male thread	Dedicated unit for custom stroke	Copper and PTFE free	Axial foot	Axial foot (compact)	Clevis bracket	Clevis bracket (compact)	Rod side flange	Head side flange		
50	60	70	80	90	100				N	S	P6	LB	LB2	CB	CB2	FA	FB		
							30		◎	◎	●	◎	◎	◎	◎	◎	◎		
●						1	50	1	◎	◎	●	◎	◎	◎	◎	◎	◎	◎	1094
●							50		◎	◎	◎	◎	◎	◎	◎	◎	◎		
●	●	●	●	●	●		300		◎	●	○	◎	△	◎	△	△	△		
							10		◎	▒	●	◎	◎	◎	◎	◎	◎		
						5	10	-	◎	▒	●	◎	◎	◎	◎	◎	◎	◎	1126
							20		◎	▒	●	◎	◎	◎	◎	◎	◎		
							10		◎	▒	●	◎	◎	◎	◎	◎	◎		
						5	10	-	◎	▒	●	◎	◎	◎	◎	◎	◎	◎	1126
							20		◎	▒	●	◎	◎	◎	◎	◎	◎		
							30		◎	▒	▒	◎	◎	◎	◎	◎	◎		
●						1	50	1	◎	▒	▒	◎	◎	◎	◎	◎	◎	◎	1138
●							50		◎	▒	▒	◎	◎	◎	◎	◎	◎		
						10	30		◎	▒	▒	◎	◎	◎	◎	◎	◎		
									◎	▒	▒	◎	◎	◎	◎	◎	◎		
						15			◎	▒	▒	◎	◎	◎	◎	◎	◎		
●							50	1	◎	▒	▒	◎	◎	◎	◎	◎	◎	◎	1142
●						10			◎	▒	▒	◎	◎	◎	◎	◎	◎		
●									◎	▒	▒	◎	◎	◎	◎	◎	◎		
●							100		◎	▒	○	◎	◎	◎	◎	◎	◎		
●	●	●	●	●	●	5	200	1	◎	▒	○	◎	◎	◎	◎	◎	◎	◎	1160
●	●	●	●	●	●		300		◎	▒	○	◎	◎	◎	◎	◎	◎		
							30		◎	▒	▒	◎	◎	◎	◎	◎	◎		
●						1	50	1	◎	▒	▒	◎	◎	◎	◎	◎	◎	◎	1172
●							50		◎	▒	▒	◎	◎	◎	◎	◎	◎		
							30		◎	▒	▒	◎	◎	◎	◎	◎	◎		
●						1	50	1	◎	▒	▒	◎	◎	◎	◎	◎	◎	◎	1178
●							50		◎	▒	▒	◎	◎	◎	◎	◎	◎		
							30		◎	▒	●	◎	◎	▒	▒	◎	▒		
●						1	50	1	◎	▒	●	◎	◎	▒	▒	◎	▒	◎	1188
●							50		◎	▒	◎	◎	◎	▒	▒	◎	▒		
●	●	●	●	●	●	10	300		◎	▒	○	◎	△	▒	▒	△	▒		
							30		◎	▒	●	▒	▒	▒	▒	▒	▒		
●						1	50	1	◎	▒	●	▒	▒	▒	▒	▒	▒	◎	1200
●							50		◎	▒	○	▒	▒	▒	▒	▒	▒		
							30		◎	▒	●	▒	▒	▒	▒	▒	▒		
●						1	50	1	◎	▒	●	▒	▒	▒	▒	▒	▒	◎	1210
●							50		◎	▒	○	▒	▒	▒	▒	▒	▒		
							30		◎	▒	●	◎	◎	◎	◎	◎	◎		
●						1	50	1	◎	▒	▒	◎	◎	◎	◎	◎	◎	◎	1220
●							50		◎	▒	▒	◎	◎	◎	◎	◎	◎		
							30		◎	▒	○	△ *1	△ *1	◎	◎	△ *1	◎		
●						1	50	1	◎	▒	○	△ *1	△ *1	◎	◎	△ *1	◎	◎	1230
●							50		◎	▒	○	◎	◎	◎	◎	◎	◎		
●						1	50	1	◎	▒	▒	◎	◎	◎	◎	◎	◎	◎	1246
●							50		◎	▒	▒	◎	◎	◎	◎	◎	◎		
●						1	50	1	◎	▒	▒	◎	◎	▒	▒	◎	▒	◎	1264
●							50		◎	▒	▒	◎	◎	▒	▒	◎	▒		
○						1	50	1	○	▒	▒	○	○	○	○	○	○	○	1272
○							50		○	▒	▒	○	○	○	○	○	○		

*1: The structure of ø16 to ø25 does not permit retrofitting of the foot bracket (LB, LB2) or flange bracket (FA) on the rod side. Assembly before shipment is available as made to order.

Series variation

Compact cylinder SSD Series

[High load]

Variation	Model No. JIS symbol	Bore size (mm)	Standard stroke(mm) 5	10	15	20	25	30	40	50	60
Double acting/ single rod/ high load with switch	SSD-K SSD-KL	ø12/ø16	●	●	●	●	●	●	●	●	
		ø20	●	●	●	●	●	●	●	●	
		ø25/ø32/ø40/ø50		●	●	●	●	●	●	●	●
		ø63/ø80/ø100		●		●		●	●	●	●
Double acting/ rubber-air cushioned	SSD-K-*C	ø20	●	●	●	●	●	●	●	●	●
		ø25/ø32/ø40/ø50		●	●	●	●	●	●	●	●
		ø63/ø80/ø100		●		●		●	●	●	●
Double acting/ high load/fine speed with switch	SSD-KF SSD-KLF	ø12/ø16/ø20	●	●	●	●	●	●	●	●	
		ø25/ø32/ø40/ø50		●	●	●	●	●	●	●	●
		ø63/ø80/ø100		●		●		●	●	●	●
Double acting/ high load/low friction with switch	SSD-KU SSD-KUL	ø20	●	●	●	●	●	●	●	●	
		ø25/ø32/ø40/ø50		●	●	●	●	●	●	●	●
		ø63/ø80/ø100		●		●		●	●	●	●
Double acting/high load/ coolant proof with switch	SSD-KG2/KG3 SSD-KG2L/KG3L	ø16/ø20	●	●	●	●	●	●	●	●	
		ø25/ø32/ø40/ø50		●	●	●	●	●	●	●	●
		ø63/ø80/ø100		●		●		●	●	●	●
Double acting/high load/ anti-spatter adherence with switch	SSD-KG1/KG4 SSD-KG1L/KG4L	ø25/ø32 ø40/ø50		●	●	●	●	●	●	●	●
		ø63/ø80/ø100		●		●		●	●	●	●
Double acting/high load/ environment-resistant scraper with switch	SSD-KG5 SSD-KG5L	ø20	○	○	○	○	○	○	○	○	
		ø25/ø32/ø40/ø50		○	○	○	○	○	○	○	○
		ø63/ø80/ø100		○		○		○	○	○	○

* The length measuring function (cylinder with length measuring sensor, super compact LN-A* Series) is also available. Refer to “Pneumatic Cylinders II” (No.CB-030SA) for details.

[With strong magnetic field proof switch]

Double acting/single rod with strong magnetic field proof switch	SSD-L4	ø40, ø50				●		●	●	●	
		ø63, ø80, ø100				●		●	●	●	
Double acting/single rod/ strong magnetic field proof with switch/coil scraper	SSD-G1L4	ø40, ø50				●		●	●	●	
		ø63, ø80, ø100				●		●	●	●	
Double acting/high load/ strong magnetic field proof with switch	SSD-KL4	ø40, ø50				●		●	●	●	●
		ø63, ø80, ø100				●		●	●	●	●
Double acting/high load with strong magnetic field proof switch with coil scraper	SSD-KG1L4	ø40, ø50				●		●	●	●	●
		ø63, ø80, ø100				●		●	●	●	●

●: Standard, ◎: Option, ○: Made to order, ▒: Not available

Standard stroke (mm)				Min. stroke (mm)	Max. stroke (mm)	Custom stroke (per mm)	Option			Mounting bracket						Switch	Page
							Rod end male thread	Dedicated unit for custom stroke	Copper and PTFE free	Axial foot type	Axial foot type(Compact)	Clevis bracket	Clevis bracket(Compact)	Rod side flange	Head side flange		
70	80	90	100				N	S	P6	LB	LB2	CB	CB2	FA	FB		
				1	100	1	◎	◎	●	◎	◎	◎	◎	◎	◎	◎	1116
					200		◎	◎	◎	◎	◎	◎	◎	◎	◎		
●	●	●	●		300		◎	◎	◎	◎	◎	◎	◎	◎	◎		
●	●	●	●		300		◎	◎	◎	◎	◎	◎	◎	◎	◎		
●	●	●	●	5	200	1	◎	▒	▒	◎	◎	◎	◎	◎	◎	◎	1150
●	●	●	●		300		◎	▒	○	◎	◎	◎	◎	◎	◎		
●	●	●	●	10	300		◎	▒	○	◎	◎	◎	◎	◎	◎		
				1	100	1	◎	▒	▒	◎	◎	◎	◎	◎	◎	◎	1172
●	●	●	●		150		◎	▒	▒	◎	◎	◎	◎	◎	◎		
●	●	●	●		200		◎	▒	▒	◎	◎	◎	◎	◎	◎		
				5	200	1	◎	▒	▒	◎	◎	◎	◎	◎	◎	◎	1184
●	●	●	●		300		◎	▒	▒	◎	◎	◎	◎	◎	◎		
●	●	●	●		300		◎	▒	▒	◎	◎	◎	◎	◎	◎		
				1	100	1	◎	▒	○	△ *1	△ *1	◎	◎	△ *1	◎	◎	1238
●	●	●	●		150		◎	▒	○	△ *1	△ *1	◎	◎	△ *1	◎		
●	●	●	●		200		◎	▒	○	◎	◎	◎	◎	◎	◎		
●	●	●	●	1	300	1	◎	▒	▒	◎	◎	◎	◎	◎	◎	◎	1254
●	●	●	●		300		◎	▒	▒	◎	◎	◎	◎	◎	◎		
				1	200	1	○	▒	▒	○	○	○	○	○	○	○	1280
○	○	○	○		300		○	▒	▒	○	○	○	○	○	○		
○	○	○	○		300		○	▒	▒		○	○	○	○	○		

*1: The structure of ø16 to ø25 does not permit retrofitting of the foot bracket (LB, LB2) or flange bracket (FA) on the rod side. Assembly before shipment is available as made to order.

				20	50	1	◎	▒	○	◎	◎	◎	◎	◎	◎	◎	1288
							◎	▒	○	◎	◎	◎	◎	◎	◎		
				20	50	1	◎	▒	▒	◎	◎	◎	◎	◎	◎	◎	1294
							◎	▒	▒	◎	◎	◎	◎	◎	◎		
●	●	●	●	20	150	1	◎	▒	○	◎	◎	◎	◎	◎	◎	◎	1300
●	●	●	●		200		◎	▒	○	◎	◎	◎	◎	◎	◎		
●	●	●	●	20	150	1	◎	▒	▒	◎	◎	◎	◎	◎	◎	◎	1306
●	●	●	●		200		◎	▒	▒	◎	◎	◎	◎	◎	◎		

SCP*3
CMK2
CMA2
SCM
SCG
SCA2
SCS2
CKV2
CAV2/COVP/N2
SSD2
SSG
SSD
CAT
MDC2
MVC
SMG
MSD/MSDG
FC*
STK
SRL3
SRG3
SRM3
SRT3
MRL2
MRG2
SM-25
ShkAbs
FJ
FK
Spd Contr
Ending

Variation and option combination selection table

SSD (ø100 or less)

◎: Option
○: Available (made-to-order product)
△: Available depending on conditions (Contact CKD.)
x: Not available

Category		Category	Variation																				Port thread			Option					
			Double acting single rod	Single acting push	Single acting pull	Double acting double rod	Back to back	Two-stage	With position locking	Rotation-stop	Heat resistant (120°C)	Low speed	With rubber scraper	With metal scraper	With coolant proof scraper (NBR)	With coolant proof scraper (FKM)	Anti-spatter adherence	With environment-resistant scraper	With cylinder switch	With cylinder switch (for strong magnetic field proof)	With cylinder switch (for heat resistance)	Fine speed	NPT(ø32 to ø100)	G(ø32 to ø100)		Piston rod material stainless steel	Piston rod end male thread	Copper and PTFE free	Clean-room specifications (exhaust port)	Clean-room specifications (vacuum treatment)	Specify piston rod end form
		Code	None	X	Y	D	B	W	Q	M	T	O	G	G1	G2	G3	G4	G5	L	L4	T1L	F	N	G		M	N	P6	P7	P71	N**
Variation	Double acting single rod	Blank																					○	○		◎	◎	◎	◎	◎	○
Variation	Single acting push	X			x	△	○	x	x	△	○	x	△	△	△	△	△	△	◎	○	○	x	○	○		◎	◎	*5	x	x	○
Variation	Single acting pull	Y				x	○	x	x	△	○	x	△	△	△	△	△	△	◎	○	○	x	○	○		◎	◎	*5	x	x	△
Variation	Double acting double rod	D					x	x	○	○	○	○	○	○	○	○	○	○	◎	○	○	○	○	○		◎	◎	*6	○	○	○
Variation	Back to back	B						x	○	○	○	○	○	○	○	○	○	○	◎	○	○	○	○	○		◎	◎	*7	○	○	○
Variation	Two-stage	W							x	○	○	○	△	△	△	△	△	△	◎	○	○	○	○	○		◎	◎	*7	○	△	○
Variation	With position locking	Q								△	x	△	△	△	△	△	△	△	◎	○	x	△	○	○		○	◎	○	△	△	○
Variation	Rotation-stop	M									x	○	x	x	x	x	x	x	◎	○	x	○	○	○		*10	◎	*1	*10	*10	○
Variation	Heat resistance (120°C)	T										x	x	○	x	x	x	x	x	x	*4	x	○	○		◎	◎	x	x	x	○
Variation	Low speed	O											x	x	x	x	x	x	◎	○	x	x	○	○		◎	◎	x	△	△	○
Variation	With rubber scraper	G												x	x	x	x	x	○	○	x	x	○	○		○	○	○	x	x	○
Variation	With metal scraper	G1													x	x	*7	x	◎	○	○	x	○	○		○	○	x	x	x	○
Variation	With coolant proof scraper (NBR)	G2														x	x	x	◎	x	x	x	○	○		*2	◎	○	x	x	○
Variation	With coolant proof scraper (FKM)	G3															x	x	◎	x	x	x	○	○		*2	◎	○	x	x	○
Variation	Anti-spatter adherence	G4																x	○	○	x	x	○	○		○	○	x	x	x	○
Variation	With environment-resistant scraper	G5																	○	○	x	x	○	○		○	○	○	x	x	○
Variation	With cylinder switch	L																		x	x	◎	○	○		◎	◎	◎	◎	◎	○
Variation	With cylinder switch (strong magnetic field proof)	L4																			x	○	○	○		○	◎	○	○	○	○
Variation	With cylinder switch (for heat resistance)	T1L																				x	○	○		○	◎	x	x	x	○
Variation	Fine speed	F																					○	○		○	◎	x	○	○	○
Port thread	NPT(ø32 to ø100)	N																						x		x	○	○	○	○	○
Port thread	G(ø32 to ø100)	G																								x	○	○	○	○	○
Option	Piston rod material SS (with C-ring)	M																									◎	○	*3	*3	○
Option	Piston rod end male thread	N																										◎	◎	◎	x
Option	Copper and PTFE free	P6																											x	x	○
Option	Clean-room specifications (exhaust port)	P7																												x	○
Option	Clean-room specifications (vacuum treatment)	P71																													○
Option	Specify piston rod end form	N**																													
Accessory	Cylinder switch	Separate list	◎	◎	◎	◎	◎	◎	◎	◎	x	◎	○	◎	◎	◎	◎	◎	◎	◎	◎	◎	○	○		◎	◎	◎	◎	◎	○
Accessory	Mounting bracket LB with bolt	LB	◎	◎	◎	◎	△	△	◎	◎	◎	◎	○	◎	*9	*9	◎	◎	◎	◎	◎	◎	○	○		◎	◎	◎	△	△	○
Accessory	Mounting bracket LB2 with bolt	LB2	◎	◎	◎	◎	△	△	◎	◎	◎	◎	○	◎	*9	*9	◎	◎	◎	◎	◎	◎	○	○		◎	◎	◎	△	△	○
Accessory	Mounting bracket CB with bolt/pin	CB	◎	◎	◎	x	x	△	◎	◎	◎	◎	○	◎	◎	◎	◎	◎	◎	◎	◎	◎	○	○		◎	◎	◎	x	x	○
Accessory	Mounting bracket CB2 with bolt/pin	CB2	◎	◎	◎	x	x	△	◎	◎	◎	◎	○	◎	◎	◎	◎	◎	◎	◎	◎	◎	○	○		◎	◎	◎	x	x	○
Accessory	Rod side flange	FA	◎	◎	◎	◎	○	○	◎	◎	◎	◎	○	◎	*9	*9	◎	◎	◎	◎	◎	◎	○	○		◎	◎	◎	△	△	○
Accessory	Head side flange	FB	◎	◎	◎	x	x	x	◎	◎	◎	◎	○	◎	◎	◎	◎	◎	◎	◎	◎	◎	○	○		◎	◎	◎	△	△	○
Accessory	Mounting bolt	Separate list	◎	◎	◎	◎	x	x	◎	◎	◎	◎	○	◎	△	△	◎	◎	◎	◎	◎	◎	○	○		△	◎	◎	△	△	○

Caution
Consult with CKD for dimensions when variations/options are combined.
*1 : P6 is standard only for ø12 to ø25. ø32 to ø63 are not available.
*2 : When "G2" or "G3" is selected, the material for the piston rod and C-ring is stainless steel. M code is not required.
*3 : When "P7" or "P71" female thread is selected, the material for the piston rod and C-ring is stainless steel. M code is not required.
For stainless steel male thread rod nut, combination with M is required.
*4 : "T1L" has heat resistant specifications.
*5 : P6 specifications even without code.
*6 : P6 is standard for ø12 to ø50 and optional for ø63 to ø100.
*7 : P6 is standard for ø12 to ø50 and available as made to order for ø63 to ø80.
*8 : G4 includes metal scraper.
*9 : The structure of ø16 to ø25 does not permit retrofitting of the foot bracket (LB, LB2) or flange bracket (FA) on the rod side. Assembly before shipment is available as made to order.
*10 : ø12 to ø25 are options and ø32 to ø63 are made-to-order products.

[Example of model No.]

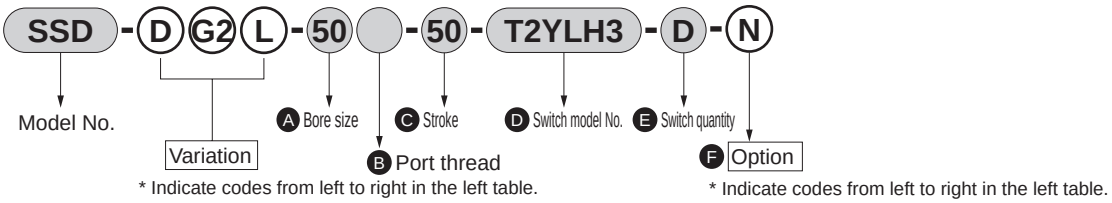

Model No.: Compact cylinder
Variation: Double rod/coolant proof scraper/with switch

A	Bore size	: ø50 mm
B	Port thread	: Rc thread
C	Stroke	: 50 mm
D	Switch model No.	: Coolant proof switch, 3 m lead wire
E	Switch quantity	: 2
F	Option	: Rod end male thread

*1: The back to back includes two cylinders. Specify the model No. as below when ordering variation.
For S1 variations only, insert the variation code before the stroke of S1.
(Example) SSD-B-32-M10-30: Only S1 is rotation-stop.

For S2 variations only, insert the variation code before the stroke of S2.
(Example) SSD-B-32-10-M30: Only S2 is rotation-stop.

When ordering the same variation for S1 and S2, insert the variation code before the bore size.
(Example) SSD-MB-32-10-30: Both S1 and S2 are rotation-stop.

Variation and option combination selection table

High load SSD-K (ø100 or less)

◎: Option
○: Available (made-to-order product)
△: Available depending on conditions (Contact CKD.)
x: Not available

Category		Variation																					Port thread		Cushion			Option					
		Double acting/high load	Double acting double rod	Back to back	Two-stage	Rotation-stop	Heat resistant (120°C)	Low speed	Low friction	With rubber scraper	With metal scraper	With coolant proof scraper (NBR)	With coolant proof scraper (FKM)	Anti-spatter adherence	With cylinder switch	With cylinder switch (strong magnetic field proof)	With cylinder switch (for heat resistance)	Fine speed	NPT(ø32 to ø100)	G(ø32 to ø100)		Rubber-air cushioned			Piston rod material stainless steel	Piston rod end male thread	Copper and PTFE free	Clean-room specifications (exhaust port)	Clean-room specifications (vacuum treatment)	Specify piston rod end form
	Code	K	D	B	W	M	T	0	U	G	G1	G2	G3	G4	L	L4	T1L	F	N	G		C			M	N	P6	P7	P71	N**
Variation	Double acting/high load	K		○	○	○	○	○	◎	○	◎	◎	◎	◎	◎	◎	○	○	○	○		◎			◎	◎	◎	◎	◎	○
	Double acting double rod	D			x	x	○	○	○	x	○	○	○	○	○	○	○	○	○	○		○			○	○	○	○	○	○
	Back to back	B				x	○	○	○	○	○	○	○	○	○	○	○	○	○	○		○			○	○	○	○	○	○
	Two-stage	W					○	○	○	x	△	△	△	△	△	○	○	○	○	○		x			○	○	○	○	△	○
	Rotation-stop	M						x	○	x	x	x	x	x	x	○	○	x	○	○		○			*10	○	*1	*10	*10	○
	Heat resistant (120°C)	T							x	x	x	○	x	x	x	x	x	*4	x	○		x			○	○	x	x	x	○
	Low speed	O								x	x	x	x	x	x	○	○	x	x	○		○			○	○	x	○	○	○
	Low friction	U										x	x	x	x	◎	◎	x	x	○		x			○	◎	x	x	○	○
	With rubber scraper	G										x	x	x	x	○	○	x	x	○		x			○	○	○	x	x	○
	With metal scraper	G1											x	x	*8	◎	○	○	○	○		○			○	○	x	x	x	○
	With coolant proof scraper (NBR)	G2												x	x	◎	x	x	x	○		○			*2	◎	○	x	x	○
	With coolant proof scraper (FKM)	G3													x	◎	x	x	x	○		x			*2	◎	○	x	x	○
	Anti-spatter adherence	G4														x	x	x	x	○		○			○	○	x	x	x	○
	With cylinder switch	L															x	x	◎	○		◎			◎	◎	◎	○	○	○
	With cylinder switch (strong magnetic field proof)	L4																x	○	○		○			○	○	○	○	○	○
	With cylinder switch (for heat resistance)	T1L																	x	○		x			○	○	x	x	x	○
	Fine speed	F																		○		○			○	○	x	○	○	○
Port thread	NPT(ø32 to ø100)	N																			x	○			○	○	○	○	○	○
	G(ø32 to ø100)	G																				○			○	○	○	○	○	○
Cushion	Rubber-air cushioned	C																							○	◎	○	○	○	○
Option	Piston rod material stainless steel	M																								◎	○	*3	*3	○
	Piston rod end male thread	N																									◎	○	○	x
	Copper and PTFE free	P6																										x	x	○
	Clean-room specifications (exhaust port)	P7																											x	○
	Clean-room specifications (vacuum treatment)	P71																												○
	Specify piston rod end form	N**																												
Accessory	Cylinder switch	Separate list	◎	○	○	○	○	x	○	◎	○	◎	◎	◎	◎	◎	○	◎	○	○		◎			◎	◎	◎	○	○	○
	Mounting bracket LB with bolt	LB	◎	○	△	△	○	○	○	◎	○	◎	*9	*9	◎	◎	◎	○	◎	○	○	◎			◎	◎	◎	△	△	○
	Mounting bracket LB2 with bolt	LB2	◎	○	△	△	○	○	○	◎	○	◎	*9	*9	◎	◎	◎	○	◎	○	○	◎			◎	◎	◎	△	△	○
	Mounting bracket CB with bolt/pin	CB	◎	x	x	△	○	○	○	◎	○	◎	◎	◎	◎	◎	○	◎	○	○		◎			◎	◎	◎	x	x	○
	Mounting bracket CB2 with bolt/pin	CB2	◎	x	x	△	○	○	○	◎	○	◎	◎	◎	◎	◎	○	◎	○	○		◎			◎	◎	◎	x	x	○
	Rod side flange	FA	◎	○	○	○	○	○	○	◎	○	◎	*9	*9	◎	◎	◎	○	◎	○	○	◎			◎	◎	◎	△	△	○
	Head side flange	FB	◎	x	x	x	○	○	○	◎	○	◎	◎	◎	◎	◎	○	◎	○	○		◎			◎	◎	◎	△	△	○
	Mounting bolt	Separate list	◎	○	x	x	○	○	○	◎	○	◎	△	◎	◎	◎	○	◎	○	○		◎			△	◎	◎	△	△	○

Caution
Consult with CKD for dimensions when variations/options are combined.
*1 : Only ø12 to 25 are available. ø32 to ø63 are not available.
*2 : When "G2" or "G3" is selected, the material for the piston rod and C-ring is stainless steel. M code is not required.
*3 : When "P7" or "P71" female thread is selected, the material for the piston rod and C-ring is stainless steel. M code is not required.
For stainless steel male thread rod nut, combination with M is required.
*4 : "T1L" has heat resistant specifications.
*5 : Heat resistance is without rubber cushion.
*6 : If the standard stroke is exceeded, the double rod is available as a standard double rod instead of a high load.
*7 : The 2-stage is available as a high load only for the S1 side cylinder.
*8 : G4 includes metal scraper.
*9 : The structure of ø16 to ø25 does not permit retrofitting of the foot bracket (LB, LB2) or flange bracket (FA) on the rod side. Assembly before shipment is available as made to order.
*10 : ø12 to ø25 are options and ø32 to ø63 are made-to-order products.

[Example of model No.]

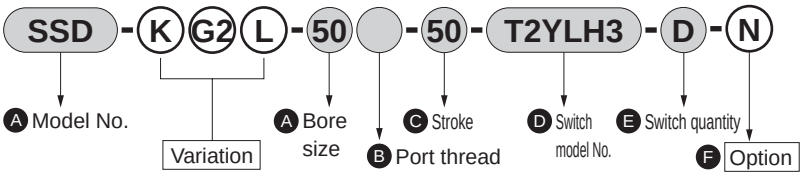

* Indicate codes from left to right in the left table.
* For the fine speed, insert "F" after with/without switch (L).

* Indicate codes from left to right in the left table.

Model No.: Compact cylinder
Variation: High load/coolant proof scraper/with switch

A	Bore size	: ø50 mm
B	Port thread	: Rc thread
C	Stroke	: 50 mm
D	Switch model No.	: Coolant proof switch, 3 m lead wire
E	Switch quantity	: 2
F	Option	: Rod end male thread

*1: The back to back includes two cylinders. Specify the model No. as below when ordering variation.
For S1 variations only, insert the variation code before the stroke of S1.
(Example) SSD-B-32- K100-30: Only S1 is high load.

For S2 variations only, insert the variation code before the stroke of S2.
(Example) SSD-B-32-30- K100: Only S2 is high load.

When ordering the same variation for S1 and S2, insert the variation code before the bore size.
(Example) SSD- KB-32-30-100: Both S1 and S2 are high load.

Variation and option combination selection table

SSD (ø125 or more)

◎: Option
○: Available (made-to-order product)
△: Available depending on conditions (Contact CKD.)
x: Not available

Category		Category	Variation												Port thread			Option						
			Double acting single rod	Double acting double rod	Back to back	Two-stage	Heat resistant (120°C)	Low speed	With rubber scraper	With metal scraper	With coolant proof scraper (NBR)	With coolant proof scraper (FKM)	With cylinder switch	Fine speed	NPT	G		Piston rod material stainless steel	Piston rod/C-ring material stainless steel	Piston rod end male thread	Copper and PTFE free	Clean-room specifications (exhaust port)	Clean-room specifications (vacuum treatment)	Specify piston rod end form
		Code	None	D	B	W	T	O	G	G1	G2	G3	L	F	N	G		M	M1	N	P6	P7	P71	N**
Variation	Double acting single rod	Blank													○	○		○	○	◎	○	○	○	○
Variation	Double acting double rod	D			x	x	○	○	○	○	○	○	◎	○	○	○		○	○	◎	○	○	○	○
Variation	Back to back	B				x	○	○	○	○	○	○	○	○	○	○		○	○	○	○	○	○	○
Variation	Two-stage	W					○	○	△	△	△	△	○	○	○	○		○	○	○	○	○	△	○
Variation	Heat resistant (120°C)	T						x	x	○	x	x	x	x	○	○		○	○	○	x	x	x	○
Variation	Low speed	O							x	x	x	x	○	x	○	○		○	○	○	x	○	○	○
Variation	With rubber scraper	G								x	x	x	○	x	○	○		○	○	○	○	x	x	○
Variation	With metal scraper	G1									x	x	○	x	○	○		○	○	○	x	x	x	○
Variation	With coolant proof scraper (NBR)	G2										x	○	x	○	○		*1	○	○	○	x	x	○
Variation	With coolant proof scraper (FKM)	G3											○	x	○	○		*1	○	○	○	x	x	○
Variation	With cylinder switch	L												○	○	○		○	○	◎	○	○	○	○
Variation	Fine speed	F													○	○		○	○	○	x	○	○	○
Port thread	NPT	N														x		○	○	○	○	○	○	○
Port thread	G	G																○	○	○	○	○	○	○
Option	Piston rod material stainless steel	M																	x	○	○	*2	*2	○
Option	Piston rod/C-ring material stainless steel	M1																		○	○	○	○	○
Option	Piston rod end male thread	N																			○	○	○	x
Option	Copper and PTFE free	P6																				x	x	○
Option	Clean-room specifications (exhaust port)	P7																					x	○
Option	Clean-room specifications (vacuum treatment)	P71																						○
Option	Specify piston rod end form	N**																						
Accessory	Cylinder switch	Listed separately	◎	◎	○	○	x	○	○	○	○	○	◎	○	○	○		○	○	◎	○	○	○	○
Accessory	Mounting bracket LB with bolt	LB	◎	○	△	△	○	○	○	○	△	△	◎	○	○	○		○	○	◎	○	△	△	○
Accessory	Mounting bracket CB with bolt/pin	CB	◎	x	x	△	○	○	○	○	△	△	◎	○	○	○		○	○	◎	○	x	x	○
Accessory	Mounting bolt	Listed separately	◎	○	x	x	○	○	○	○	△	△	◎	○	○	○		△	△	◎	○	△	△	○

Caution
Consult with CKD for dimensions when variations/options are combined.
*1: When “G2” or “G3” is selected, the material for the piston rod is stainless steel. M code is not required.
*2: When “P7” or “P71” female thread is selected, the material for the piston rod is stainless steel. M code is not required.
For stainless steel male thread rod nut, combination with M is required.

[Example of model No.]

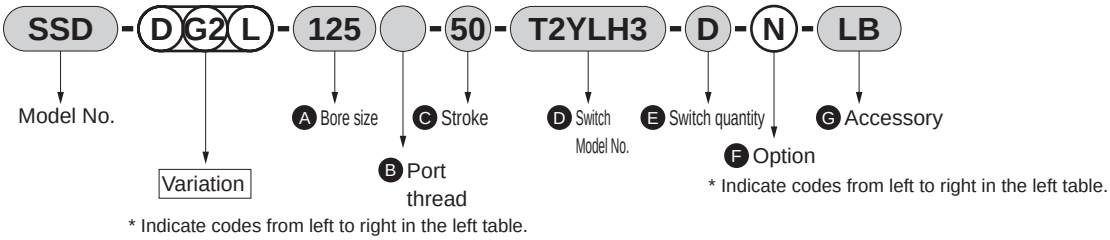

Model No.: Compact cylinder
● Variation: Double rod/coolant proof scraper/with switch

A	Bore size	: ø125 mm
B	Port thread	: Rc thread
C	Stroke	: 50 mm
D	Switch model No.	: Proximity coolant proof switch, 3 m lead wire
E	Switch quantity	: 2
F	Option	: Rod end male thread
G	Accessory	: Axial foot

*1: The back to back includes two cylinders. Specify the model No. as below when ordering variation.
For S1 variations only, insert the variation code before the stroke of S1.
(Example) SSD-B-125-010-30: Only S1 is low speed.

For S2 variations only, insert the variation code before the stroke of S2.
(Example) SSD-B-125-10-030: Only S2 is low speed.

When ordering the same variation for S1 and S2, insert the variation code before the bore size.
(Example) SSD-B0-125-10-30: Both S1 and S2 are low speed.

Switch integrated design

Miniature switch is stored neatly in the body. Super compact cylinder which realizes space saving and compact features. (ø12 to ø160)

Switch can be mounted on 3 surfaces.

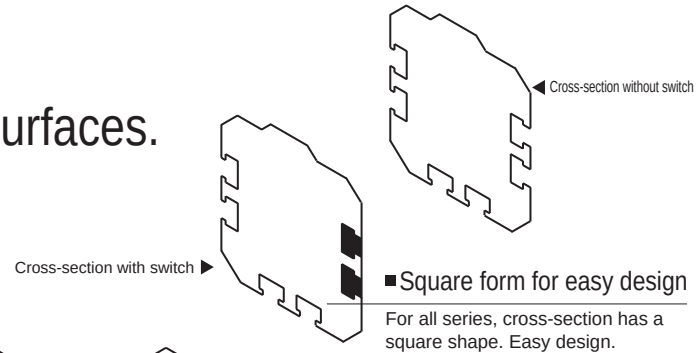

■Square form for easy design

For all series, cross-section has a square shape. Easy design.

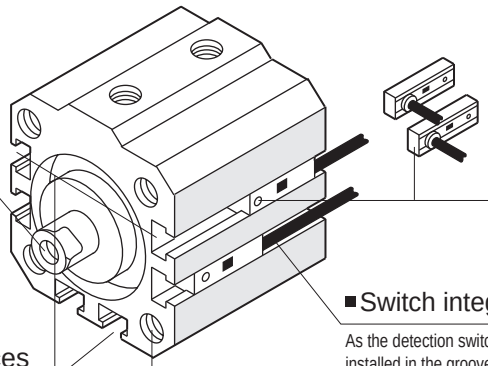

■Can be easily mounted on jigs, etc.

Female thread is available as standard for rod end. Male thread is also available.

■Various switches can be attached

Proximity or reed can be selected as well as vertical or horizontal lead wire outlet directions.

■Switch integrated storage

As the detection switch can be stored and installed in the groove of the body, there is no projection and neat space saving is realized. (excluding T2Y*/T3Y*)

■ Can be mounted on 3 surfaces

Cylinder switch can be mounted from 3 surfaces. (ø100, ø125, ø140, ø160 are 4-surface mountable.)

■Mounting hole

Either through bolt or screw-in can be selected.

*Mounting of cylinder switch on 4 surfaces is supported.
Refer to page 1318 for details.

Applications

1 Robot hand

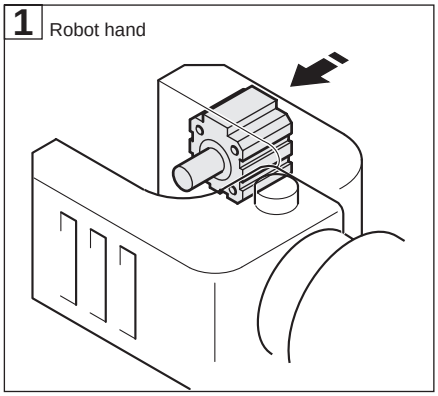

2 Clamp

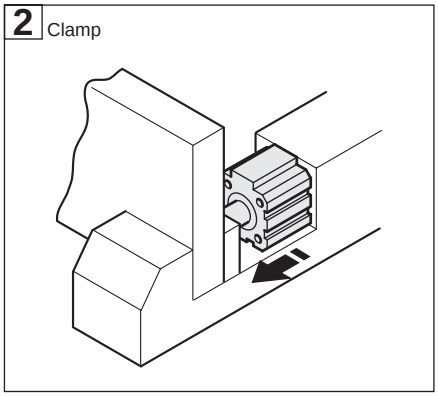

3 Mold casting

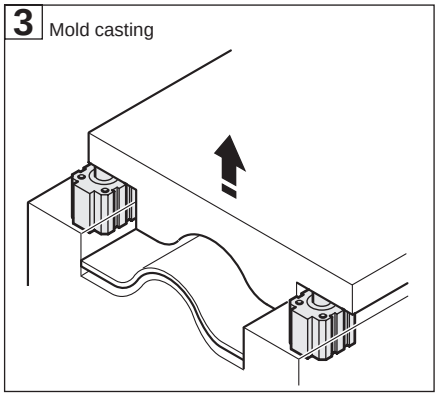

4 Clamp

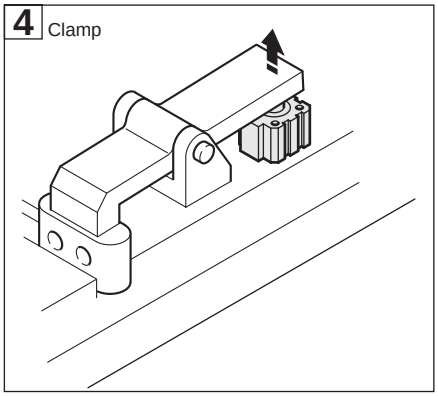

5 Positioning

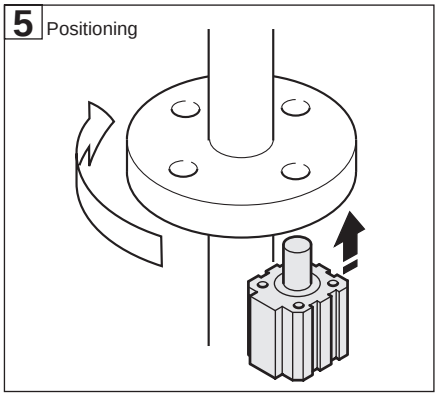

6 Press fitting

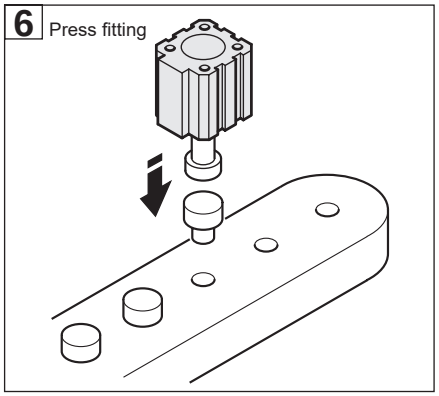

7 Stopper

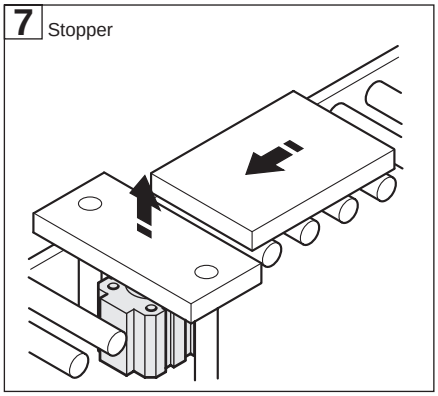

8 Press

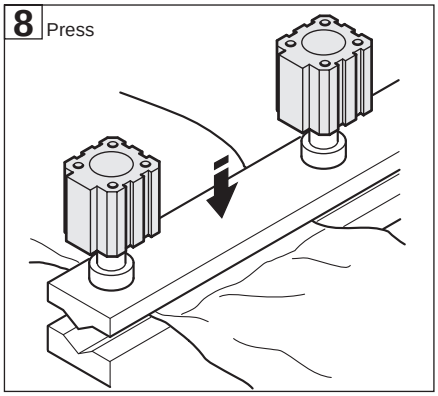

9 Cut

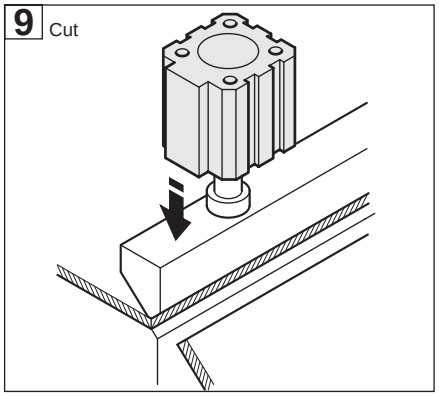

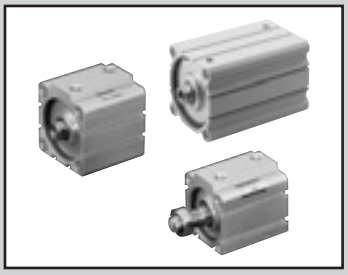

Compact cylinder double acting/single rod

SSD Series

● Bore size: ø12/ø16/ø20/ø25/ø32/ø40/ø50/ø63/ø80/ø100/ø125/ø140/ø160

JIS symbol

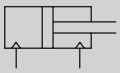

RoHS CAD

Specifications

Item		SSD SSD-L (with switch)												
Bore size mm		ø12	ø16	ø20	ø25	ø32	ø40	ø50	ø63	ø80	ø100	ø125	ø140	ø160
Actuation		Double acting												
Working fluid		Compressed air												
Max. working pressure MPa		1.0 (≈150 psi, 10 bar)												
Min. working pressure MPa		0.1 (≈15 psi, 1 bar)							0.05 (≈7.3 psi, 0.5 bar)					
Proof pressure MPa		1.6 (≈230 psi, 16 bar)												
Ambient temperature °C		-10 (14°F) to 60 (140°F) (no freezing)												
Port size		M5				Rc 1/8		Rc 1/4		Rc 3/8				
Stroke tolerance mm	With rubber cushion	$^{+2.0}_{0}$												
	Without cushion	$^{+1.0}_{0}$										-		
Working piston speed mm/s		50 to 500							50 to 300					
Cushion		With or without cushion can be selected										With rubber cushion (standard)		
Lubrication		Not required (use turbine oil class 1 ISO VG32 if necessary for lubrication)												
Allowable absorbed energy J	With rubber cushion	0.03	0.05	0.10	0.16	0.16	0.44	0.75	0.78	2.51	3.92	6.52	6.52	7.78
	Without cushion	0.004	0.01	0.016	0.021	0.025	0.092	0.1	0.12	0.27	0.56	-		

Clean-room specifications

(Catalog No. CB-033SA)

● Anti-dust generation structure for use in cleanrooms

SSD····· P7*

SSD····· P5*

Specifications for rechargeable battery

(Catalog No. CC-1226A)

● Design compatible with rechargeable battery manufacturing process

SSD····· P4*

Stroke

Bore size (mm)	Standard stroke (mm)	Max. stroke (mm)	Min. stroke (mm)
ø12	5, 10, 15, 20, 25, 30	*1) 30	1
ø16			
ø20	5, 10, 15, 20, 25, 30, 40, 50	*1) 50	
ø25			
ø32			
ø40			
ø50			
ø63	5, 10, 20, 30, 40, 50	*1) 50	
ø80			
ø100			
ø125	10, 20, 30, 40 50, 60, 70, 80 90, 100	300	
ø140			
ø160			

*1) For ø12 to ø100, if the standard stroke is exceeded, the high load is used. Refer to page 1116 for specifications.
*2) For the type with switch, refer to the table on the following page of installed switch numbers and minimum stroke.
*3) Refer to pages 1320 and 1321 for the min. stroke with mounting brackets LB and LB2.

Number of installed switches and min. stroke (mm)

Switch quantity	1	2	3	4	5
Switch model No. / Bore size (mm)	T*	T*	T*	T*	T*
ø12	5	5	25	-	-
ø16	5	5	25	-	-
ø20	5	5	35	50	-
ø25	5	5	35	50	-
ø32	5	5	35	50	-
ø40	5	5	35	50	-
ø50	5	5	35	50	-
ø63	5	5	35	50	-
ø80	5	5	35	50	-
ø100	5	5	35	50	-
ø125	5	5	40	55	70
ø140	5	5	40	55	70
ø160	5	5	40	55	70

Note: Less than 10 mm with the 2-color LED, off-delay, AC magnetic field proof, T1* or T8* switch is not available.

Custom stroke

● SSD Series

Item	Standard products		Optional products	
	Standard stroke body with spacer		Dedicated unit (-S)	
Model No.	Refer to How to order.		Add "-S" option code to the model No.	
Description	A spacer is added to the standard stroke body to adjust the stroke in 1 mm increments.		Dedicated units of the required stroke are available.	
Stroke range	Bore size	Stroke range	Bore size	Stroke range
	12/16	1 to 29	12/16	6 (11) to 29 (*1)
	20 to 50	1 to 49	20 to 50	6 to 49
	63 to 100	1 to 49	63 to 100	6 to 49
	125 to 160	1 to 299 (*2)	125 to 160	1 to 299 (*2)
Example of model No.	Model No.: SSD-32-38 A +2 mm spacer is added to the SSD-32-40 standard cylinder to create 38 mm stroke. B dimension is 63 mm.		Model No.: SSD-32-38-S Dedicated units for 38 mm stroke are available. B dimension is 61mm.	

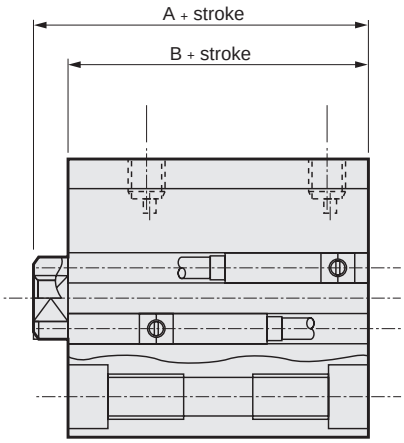

*1) The value in ( ) is for type with switch.
*2) Dedicated body is available as standard for ø125 to ø160.

Switch specifications

● 1-color/2-color LED/for AC magnetic field proof

Item	2-wire proximity				3-wire proximity				2-wire reed							2-wire proximity
	T1H/ T1V	T2H/T2V/ T2JH/T2JV	T2YH/ T2YV	T2WH/ T2WV	T3H/ T3V	T3PH/ T3PV	T3YH/ T3YV	T3WH/ T3WV	T0H/T0V		T5H/T5V		T8H/T8V			T2YD (*4) T2YDT
Applications	For programmable controller, relay, compact solenoid valve	Dedicated for programmable controller			For programmable controller, relay				For programmable controller, relay		For programmable controller, relay (no lamp), serial		For programmable controller, relay			Dedicated for programmable controller
Output method	-				NPN output	PNP output	NPN output	NPN output	-							
Pwr. supp. V.	-				10 to 28 VDC				-							
Load voltage	85 to 265 VAC	10 to 30 VDC		24 VDC ±10%	30 VDC or less				12/24 VDC	100/110 VAC	5/12/24 VDC	100/110 VAC	12/24 VDC	110 VAC	220 VAC	24 VDC ±10%
Load current	5 to 100 mA	5 to 20 mA (*3)			100 mA or less		50 mA or less		5 to 50 mA	7 to 20 mA	50 mA or less	20 mA or less	5 to 50 mA	7 to 20 mA	7 to 10 mA	5 to 20 mA
Indicator	LED (Lit when ON)	LED (Lit when ON)	Red/green LED (Lit when ON)	Red/green LED (Lit when ON)	LED (Lit when ON)	Yellow LED (Lit when ON)	Red/green LED (Lit when ON)	Red/green LED (Lit when ON)	LED (Lit when ON)		No indicator lamp		LED (Lit when ON)			Red/green LED (Lit when ON)
Leakage current	≤ 1 mA at 100 VAC, ≤ 2 mA at 200 VAC	1 mA or less			10 μA or less				0 mA							1 mA or less
Weight g	1 m:33 3 m:87 5 m:142	1 m:18 3 m:49 5 m:80	1 m:33 3 m:87 5 m:142	1 m:18 3 m:49 5 m:80	1 m:18 3 m:49 5 m:80		1 m:33 3 m:87 5 m:142	1 m:18 3 m:49 5 m:80	1 m:18 3 m:49 5 m:80				1 m:33 3 m:87 5 m:142			1 m:61 3 m:166 5 m:272

*1 : Refer to Ending Page 1 for detailed switch specifications and dimensions.
*2 : Switches other than the above models, such as switches with connectors, are also available. Refer to Ending Page 1.
*3 : The max. load current is 20 mA at 25°C. The current is lower than 20 mA if the operating ambient temperature around the switch is higher than 25˚C. (5 to 10 mA at 60°C)
*4 : Switch for AC magnetic field (T2YD/T2YDT) cannot be used in DC magnetic field.

Cylinder weight table (the weight of the switches is when there are 2 cylinder switches.)

● ø12 to ø100 (Unit: g)

Stroke (mm)	5		10		15		20		25		30		40		50	
Bore size (mm)	No switch	With switch	No switch	With switch	No switch	With switch	No switch	With switch	No switch	With switch	No switch	With switch	No switch	With switch	No switch	With switch
ø12	36	86	44	86	53	95	61	103	70	112	72	114	-	-	-	-
ø16	48	104	59	104	69	114	80	125	91	136	102	147	-	-	-	-
ø20	63	138	75	150	88	163	101	176	113	188	126	201	151	226	176	251
ø25	87	178	102	193	118	209	134	225	150	241	165	256	197	288	228	319
ø32	122	236	144	258	166	280	188	302	209	323	231	345	275	389	318	432
ø40	183	326	210	353	236	379	263	406	290	433	316	459	369	512	422	565
ø50	299	493	341	535	383	577	425	619	467	661	510	704	594	788	678	872
ø63	452	731	507	786	-	-	617	896	-	-	727	1006	838	1117	948	1227
ø80	841	1254	928	1341	-	-	1101	1514	-	-	1274	1687	1448	1861	1621	2034
ø100	1319	1886	1433	2000	-	-	1660	2227	-	-	1888	2455	2115	2682	2343	2910

● ø125 to ø160 (Unit: kg)

Stroke (mm) / Bore size (mm)	10		20		30		40		50		60		70		80		90		100	
	No switch	With switch	No switch	With switch	No switch	With switch	No switch	With switch	No switch	With switch	No switch	With switch	No switch	With switch	No switch	With switch	No switch	With switch	No switch	With switch
ø125	4.35	4.45	4.62	4.72	4.88	4.98	5.15	5.25	5.41	5.51	5.68	5.78	5.94	6.04	6.21	6.31	6.47	6.57	6.74	6.84
ø140	6.33	6.44	6.63	6.74	6.94	7.05	7.24	7.35	7.55	7.66	7.85	7.96	8.16	8.27	8.46	8.57	8.77	8.88	9.07	9.18
ø160	8.64	8.76	9.02	9.14	9.4	9.52	9.78	9.9	10.16	10.28	10.54	10.66	10.92	11.04	11.3	11.42	11.68	11.8	12.06	12.18

Theoretical thrust table

(Unit: N)

Bore size (mm)	Operating direction	Working pressure MPa											
		0.05	0.1	0.15	0.2	0.3	0.4	0.5	0.6	0.7	0.8	0.9	1.0
ø12	Push	-	11.3	17.0	22.6	33.9	45.2	56.5	67.9	79.2	90.5	$1.02x10^2$	$1.13x10^2$
	Pull	-	8.48	12.7	17.0	25.4	33.9	42.4	50.9	59.4	67.9	76.3	84.8
ø16	Push	-	20.1	30.2	40.2	60.3	80.4	$1.01x10^2$	$1.21x10^2$	$1.41x10^2$	$1.61x10^2$	$1.81x10^2$	$2.01x10^2$
	Pull	-	15.1	22.6	30.2	45.2	60.3	75.4	90.5	$1.06x10^2$	$1.21x10^2$	$1.36x10^2$	$1.51x10^2$
ø20	Push	-	31.4	47.1	62.8	94.2	$1.26x10^2$	$1.57x10^2$	$1.88x10^2$	$2.20x10^2$	$2.51x10^2$	$2.83x10^2$	$3.14x10^2$
	Pull	-	23.6	35.3	47.1	70.7	94.2	$1.18x10^2$	$1.41x10^2$	$1.65x10^2$	$1.88x10^2$	$2.12x10^2$	$2.36x10^2$
ø25	Push	-	49.1	73.6	98.2	$1.47x10^2$	$1.96x10^2$	$2.45x10^2$	$2.95x10^2$	$3.44x10^2$	$3.93x10^2$	$4.42x10^2$	$4.91x10^2$
	Pull	-	37.8	56.7	75.6	$1.13x10^2$	$1.51x10^2$	$1.89x10^2$	$2.27x10^2$	$2.64x10^2$	$3.02x10^2$	$3.40x10^2$	$3.78x10^2$
ø32	Push	-	80.4	$1.21x10^2$	$1.61x10^2$	$2.41x10^2$	$3.22x10^2$	$4.02x10^2$	$4.83x10^2$	$5.63x10^2$	$6.43x10^2$	$7.24x10^2$	$8.04x10^2$
	Pull	-	60.3	90.5	$1.21x10^2$	$1.81x10^2$	$2.41x10^2$	$3.02x10^2$	$3.62x10^2$	$4.22x10^2$	$4.83x10^2$	$5.43x10^2$	$6.03x10^2$
ø40	Push	-	$1.26x10^2$	$1.88x10^2$	$2.51x10^2$	$3.77x10^2$	$5.03x10^2$	$6.28x10^2$	$7.54x10^2$	$8.80x10^2$	$1.01x10^3$	$1.13x10^3$	$1.26x10^3$
	Pull	-	$1.06x10^2$	$1.58x10^2$	$2.11x10^2$	$3.17x10^2$	$4.22x10^2$	$5.28x10^2$	$6.33x10^2$	$7.39x10^2$	$8.44x10^2$	$9.50x10^2$	$1.06x10^3$
ø50	Push	-	$1.96x10^2$	$2.95x10^2$	$3.93x10^2$	$5.89x10^2$	$7.85x10^2$	$9.82x10^2$	$1.18x10^3$	$1.37x10^3$	$1.57x10^3$	$1.77x10^3$	$1.96x10^3$
	Pull	-	$1.65x10^2$	$2.47x10^2$	$3.30x10^2$	$4.95x10^2$	$6.60x10^2$	$8.25x10^2$	$9.90x10^2$	$1.15x10^3$	$1.32x10^3$	$1.48x10^3$	$1.65x10^3$
ø63	Push	$1.56x10^2$	$3.12x10^2$	$4.68x10^2$	$6.23x10^2$	$9.35x10^2$	$1.25x10^3$	$1.56x10^3$	$1.87x10^3$	$2.18x10^3$	$2.49x10^3$	$2.81x10^3$	$3.12x10^3$
	Pull	$1.40x10^2$	$2.80x10^2$	$4.20x10^2$	$5.61x10^2$	$8.41x10^2$	$1.12x10^3$	$1.40x10^3$	$1.68x10^3$	$1.96x10^3$	$2.24x10^3$	$2.52x10^3$	$2.80x10^3$
ø80	Push	$2.51x10^2$	$5.03x10^2$	$7.54x10^2$	$1.01x10^3$	$1.51x10^3$	$2.01x10^3$	$2.51x10^3$	$3.02x10^3$	$3.52x10^3$	$4.02x10^3$	$4.52x10^3$	$5.03x10^3$
	Pull	$2.27x10^2$	$4.54x10^2$	$6.80x10^2$	$9.07x10^2$	$1.36x10^3$	$1.81x10^3$	$2.27x10^3$	$2.72x10^3$	$3.17x10^3$	$3.63x10^3$	$4.08x10^3$	$4.54x10^3$
ø100	Push	$3.93x10^2$	$7.85x10^2$	$1.18x10^3$	$1.57x10^3$	$2.36x10^3$	$3.14x10^3$	$3.93x10^3$	$4.71x10^3$	$5.50x10^3$	$6.28x10^3$	$7.07x10^3$	$7.85x10^3$
	Pull	$3.57x10^2$	$7.15x10^2$	$1.07x10^3$	$1.43x10^3$	$2.14x10^3$	$2.86x10^3$	$3.57x10^3$	$4.29x10^3$	$5.00x10^3$	$5.72x10^3$	$6.43x10^3$	$7.15x10^3$
ø125	Push	$6.13x10^2$	$1.23x10^3$	$1.84x10^3$	$2.45x10^3$	$3.68x10^3$	$4.91x10^3$	$6.14x10^3$	$7.36x10^3$	$8.59x10^3$	$9.82x10^3$	$1.10x10^4$	$1.23x10^4$
	Pull	$5.65x10^2$	$1.13x10^3$	$1.70x10^3$	$2.26x10^3$	$3.39x10^3$	$4.52x10^3$	$5.65x10^3$	$6.79x10^3$	$7.92x10^3$	$9.05x10^3$	$1.02x10^4$	$1.13x10^4$
ø140	Push	$7.69x10^2$	$1.54x10^3$	$2.31x10^3$	$3.08x10^3$	$4.62x10^3$	$6.16x10^3$	$7.70x10^3$	$9.24x10^3$	$1.08x10^4$	$1.23x10^4$	$1.39x10^4$	$1.54x10^4$
	Pull	$7.21x10^2$	$1.44x10^3$	$2.16x10^3$	$2.89x10^3$	$4.33x10^3$	$5.77x10^3$	$7.22x10^3$	$8.66x10^3$	$1.01x10^4$	$1.15x10^4$	$1.30x10^4$	$1.44x10^4$
ø160	Push	$10.1x10^3$	$2.01x10^3$	$3.02x10^3$	$4.02x10^3$	$6.03x10^3$	$8.04x10^3$	$1.01x10^4$	$1.21x10^4$	$1.41x10^4$	$1.61x10^4$	$1.81x10^4$	$2.01x10^4$
	Pull	$9.42x10^2$	$1.88x10^3$	$2.83x10^3$	$3.77x10^3$	$5.65x10^3$	$7.54x10^3$	$9.42x10^3$	$1.13x10^4$	$1.32x10^4$	$1.51x10^4$	$1.70x10^4$	$1.88x10^4$

SCP*3
CMK2
CMA2
SCM
SCG
SCA2
SCS2
CKV2
CAV2/COVP/N2
SSD2
SSG
SSD
CAT
MDC2
MVC
SMG
MSD/MSDG
FC*
STK
SRL3
SRG3
SRM3
SRT3
MRL2
MRG2
SM-25
ShkAbs
FJ
FK
Spd Contr
Ending

How to order

No switch (without magnet for switch)

SSD - 12 ◯ ◯ - 5 ———— N - LB - I

With switch (built-in magnet for switch)

SSD-L - 12 ◯ ◯ - 5 - T0H - R - N - LB - I

2-color LED/off-delay, with T1* switch (ø12/ø16 only) (built-in magnet for switch)

SSD-L1 - 12 ◯ ◯ - 10 - T2YH - R - N - LB - I

- Ⓐ Model No.
- Ⓑ Bore size
- Ⓒ Port thread
- Ⓓ Cushion
- Ⓔ Stroke
- Ⓕ Switch model No. *1 *2 *3 *10
- Ⓖ Switch quantity
- Ⓗ Option *4
- Ⓘ Mounting bracket *5 *6 *11
- Ⓙ Accessory *7

⚠ Precautions for model No. selection

*1 : Switches other than Ⓕ Switch model No. are also available. (Made to order) Refer to Ending Page 1 for details.
*2 : AC magnetic field proof switch cannot be installed on ø12 and ø16.
3 : T8 switch cannot be installed on ø12 to ø32.
*4 : Piston rod of ø12 to ø25 is stainless steel as standard. C-snap ring is stainless steel instead of steel. The rod end male thread nut is stainless steel.
*5 : The mounting bracket is included at shipment.
*6 : The projection dimension of piston rod WF when LB2 or FA is selected is different from that of the standard. Refer to the dimensions on pages 1109 to 1110. The number of the specified protruding dimension will be added at the end of the model No. printed on the metal plate on the body.
*7 : "I" and "Y" cannot be selected together.
*8 : Refer to Ending Page 85 for custom specifications of rod end form.
*9 : Refer to pages 1086 to 1091 for combinations of variations/options.
*10 : Switches are shipped with the product. Contact CKD if assembling before shipment is necessary.
*11 : Only LB and CB are available for ø125 to ø160.

[Example of model No.]

SSD-L-12-5-T0H-R-N-LB-I

Model: Compact cylinder, standard

Ⓑ Bore size	: ø12 mm
Ⓒ Port thread	: Rc thread
Ⓓ Cushion	: Without cushion
Ⓔ Stroke	: 5 mm
Ⓕ Switch model No.	: Reed switch T0H
·Lead wire length	1 m
Ⓖ Switch quantity	: 1 on rod side
Ⓗ Option	: Rod end male thread
Ⓘ Mounting bracket	: Axial foot
Ⓙ Accessory	: Rod eye

Code	Description
Ⓐ Model No.	
SSD	Double acting/single rod
SSD-L	Double acting/single rod/with switch
SSD-L1	ø12, ø16 2-color LED, off-delay, with T1* switch
Ⓑ Bore size (mm)	
12	ø12
16	ø16
20	ø20
25	ø25
32	ø32
40	ø40
50	ø50
63	ø63
80	ø80
100	ø100
125	ø125
140	ø140
160	ø160
Ⓒ Port thread	
Blank	Rc thread
NN	NPT thread (ø32 and over) (made-to-order product)
GN	G thread (ø32 and over) (made-to-order product)
Ⓓ Cushion	
Blank	Without cushion (with rubber cushion for ø125 and over)
D	With rubber cushion (ø12 to ø100)
Ⓔ Stroke (mm)	
Refer to the stroke table on the following page.	

Ⓕ Switch model No.

Axial lead wire	Radial lead wire	Contact	Voltage AC	Voltage DC	Indicator	Lead wire
TOH*	T0V*	Reed	●	●	1-color LED	2-wire
T5H*	T5V*	Reed	●	●	No indicator lamp	2-wire
T8H*	T8V*	Reed	●	●	1-color LED	2-wire
T1H*	T1V*	Proximity	●		1-color LED	2-wire
T2H*	T2V*	Proximity		●	1-color LED	2-wire
T3H*	T3V*	Proximity		●	1-color LED	3-wire
T3PH*	T3PV*	Proximity		●	1-color LED	3-wire
T2WH*	T2WV*	Proximity		●	2-color LED	2-wire
T2YH*	T2YV*	Proximity		●	2-color LED	2-wire
T3WH*	T3WV*	Proximity		●	2-color LED	3-wire
T3YH*	T3YV*	Proximity		●	2-color LED	3-wire
T2JH*	T2JV*	Proximity		●	1-color LED off-delay	2-wire
T2YD*	-	Proximity		●	2-color LED AC magnetic field	2-wire
T2YDT*	-	Proximity		●	2-color LED AC magnetic field	2-wire
T2HR3	T2VR3	Proximity		●	1-color LED (bend resist lead wire specs)	2-wire

* Lead wire length	
Blank	1 m (standard)
3	3 m (option)
5	5 m (option)
Ⓖ Switch quantity	
R	1 on rod side
H	1 on head side
D	2

Ⓗ Option

	Bore size (mm)	12	16	20	25	32	40	50	63	80	100	125	140	160
Blank	Rod end female thread	●	●	●	●	●	●	●	●	●	●	●	●	●
N	Rod end male thread	●	●	●	●	●	●	●	●	●	●	●	●	●
P6	Cu/PTFE free specs	Supported as standard							●	●	●			
S	Unit for custom stroke	●	●	●	●	●	●	●	●	●	●	Supported as standard		
M	Piston rod material (S.S.)	●	●	●	●	●	●	●	●	●	●			

Ⓘ Mounting bracket	
LB	Axial foot
LB2	Axial foot (compact)
CB	Clevis bracket (pin and snap ring included)
CB2	Clevis bracket (compact) (pin and snap ring included)
FA	Rod side flange
FB	Head side flange
Ⓙ Accessory (available when rod end male thread "N" is selected)	
I	Rod eye
I2	Rod eye (compact)
Y	Rod clevis (pin and snap ring included)
Y2	Rod clevis (compact) (pin and snap ring included)

[Stroke table]

Stroke (mm)		Applicable bore size												
		ø12	ø16	ø20	ø25	ø32	ø40	ø50	ø63	ø80	ø100	ø125	ø140	ø160
Standard stroke	5	●	●	●	●	●	●	●	●	●	●			
	10	●	●	●	●	●	●	●	●	●	●	●	●	●
	15	●	●	●	●	●	●	●						
	20	●	●	●	●	●	●	●	●	●	●	●	●	●
	25	●	●	●	●	●	●	●						
	30	●	●	●	●	●	●	●	●	●	●	●	●	●
	40			●	●	●	●	●	●	●	●	●	●	●
	50			●	●	●	●	●	●	●	●	●	●	●
	60											●	●	●
	70											●	●	●
	80											●	●	●
	90											●	●	●
	100											●	●	●
Min. stroke (mm) *1		1												
Max. stroke (mm)		30	50									300		
Custom stroke *2		In 1 mm increments												

If the standard stroke is exceeded, the high load (K) is used. Refer to page 1116 for specifications, and pages 1122 to 1125 for dimensions.

1: Less than 5 mm for 1-color LED switch and less than 10 mm for the 2-color LED, off-delay, AC magnetic field proof, T1 or T8* switch are not available.
Refer to page 1094 for the number of installed switches and the min. stroke.

*2: Total length when using a custom stroke is different between ø12 to ø100 and ø125 to ø160 as below. Please be careful.
[ø12 to ø100]
The dimensions of the total length with the custom stroke are the handled same as the next longer standard stroke.
[ø125 to ø160]
Total length dimension with custom stroke is handled as the custom stroke dedicated length.

*3: Refer to pages 1320 and 1321 for the min. stroke with mounting brackets LB and LB2.

How to order switch

SW - T0H

Switch model No.
(Item Ⓕ on page 1096)

Clean-room specifications (Catalog No. CB-033SA)

● Anti-dust generation structure for use in cleanrooms

SSD ····· **P7***

SSD ····· **P5***

Specifications for rechargeable battery (catalog No. CC-1226A)

● Design compatible with rechargeable battery manufacturing process

SSD ····· **P4***

How to order mounting bracket

Bore size (mm) / Mounting bracket	ø12	ø16	ø20	ø25	ø32	ø40	ø50
Foot (LB)	SSD-LB-12	SSD-LB-16	SSD-LB-20	SSD-LB-25	SSD-LB-32	SSD-LB-40	SSD-LB-50
Foot (LB2)	SSD-LB2-12	SSD-LB2-16	SSD-LB2-20	SSD-LB2-25	SSD-LB2-32	SSD-LB2-40	SSD-LB2-50
Flange (FA/FB)	SSD-FA-12	SSD-FA-16	SSD-FA-20	SSD-FA-25	SSD-FA-32	SSD-FA-40	SSD-FA-50
Clevis bracket (CB)	SSD-CB-12	SSD-CB-16	SSD-CB-20	SSD-CB-25	SSD-CB-32	SSD-CB-40	SSD-CB-50
Clevis bracket (CB2)	SSD-CB2-12	SSD-CB2-16	SSD-CB2-20	SSD-CB2-25	SSD-CB2-32	SSD-CB2-40	SSD-CB2-50

Bore size (mm) / Mounting bracket	ø63	ø80	ø100	ø125	ø140	ø160	
Foot (LB)	SSD-LB-63	SSD-LB-80	SSD-LB-100	SSD-LB-125	SSD-LB-140	SSD-LB-160	
Foot (LB2)	SSD-LB2-63	SSD-LB2-80	SSD-LB2-100	-	-	-	
Flange (FA/FB)	SSD-FA-63	SSD-FA-80	SSD-FA-100	-	-	-	
Clevis bracket (CB)	SSD-CB-63	SSD-CB-80	SSD-CB-100	SSD-CB-125	SSD-CB-140	SSD-CB-160	
Clevis bracket (CB2)	SSD-CB2-63	SSD-CB2-80	SSD-CB2-100	-	-	-	

*1: The foot mounting bracket is provided as 2 pcs./set.

SCP*3
CMK2
CMA2
SCM
SCG
SCA2
SCS2
CKV2
CAV2/COVP/N2
SSD2
SSG
SSD
CAT
MDC2
MVC
SMG
MSD/MSDG
FC*
STK
SRL3
SRG3
SRM3
SRT3
MRL2
MRG2
SM-25
ShkAbs
FJ
FK
Spd Contr
Ending

Internal structure and parts list (ø12 to 50) (no cushion)

● SSD-L-12 to 25 (double acting/with switch)

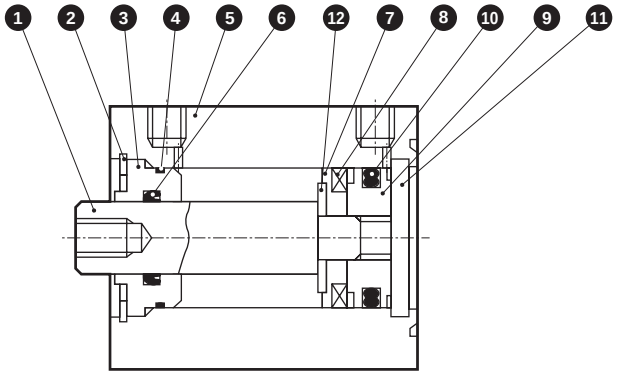

● SSD-L-32 to 50 (double acting/with switch)

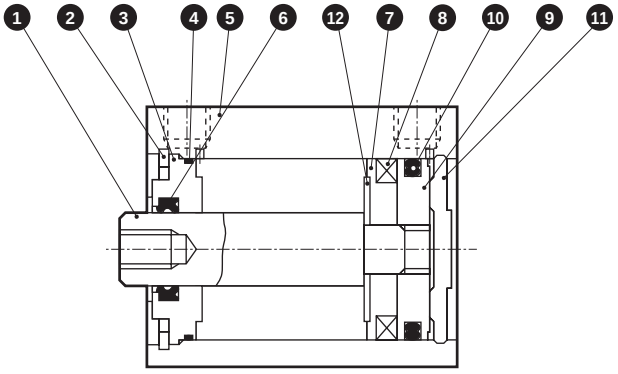

● SSD-12 to 25 (double acting)

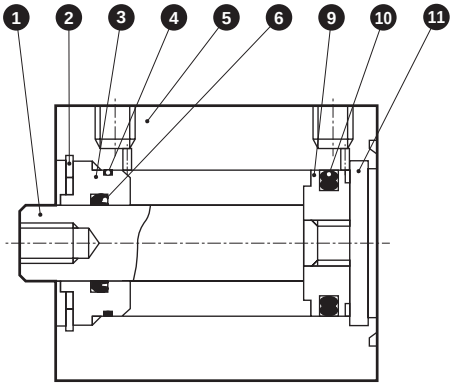

● SSD-32 to 50 (double acting)

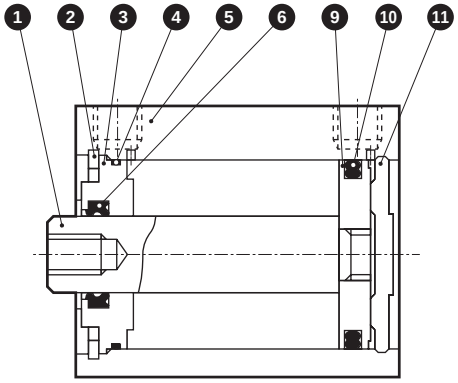

No.	Part name	Material	Remarks
1	Piston rod	ø12 to ø25: Stainless steel, ø32 to ø50: Steel	ø16 to ø50: Industrial chrome plating
2	C-snap ring	Steel	Zinc phosphate
3	Rod metal	Special aluminum	Alumite
4	Rod metal gasket	Nitrile rubber	
5	Body	Aluminum alloy	Hard alumite
6	Rod packing	Nitrile rubber	

No.	Part name	Material	Remarks
7	Spacer	ø12: Aluminum alloy ø16 to ø50: Special resin	Chromate (ø12)
8	Magnet	Plastic	
9	Piston	Aluminum alloy	Chromate
10	Piston packing	Nitrile rubber	
11	Cover	ø12 to ø25: Stainless steel ø32 to ø50: Aluminum alloy	ø32 to ø50: Alumite
12	Spacer washer	Stainless steel	ø20 to ø50

Repair parts list

Bore size (mm)	Kit No.	Repair parts No.
ø12	SSD-12K	4 6 10
ø16	SSD-16K	
ø20	SSD-20K	
ø25	SSD-25K	
ø32	SSD-32K	
ø40	SSD-40K	
ø50	SSD-50K	

Internal structure and parts list (ø63 to 100) (no cushion)

● SSD-L-63 to 100 (double acting/with switch)

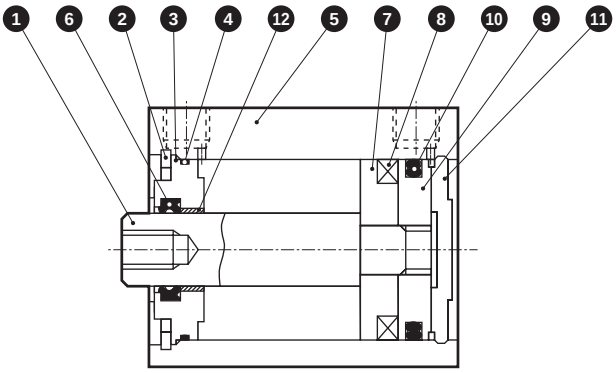

● SSD-63 to 100 (double acting)

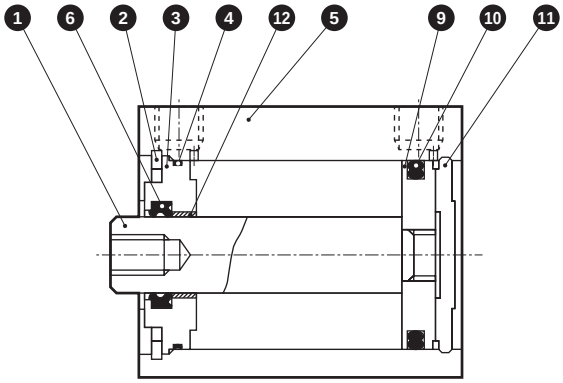

No.	Part name	Material	Remarks	No.	Part name	Material	Remarks
1	Piston rod	Steel	Industrial chrome plating	7	Spacer	Aluminum alloy	Chromate
2	C-snap ring	Steel	Zinc phosphate	8	Magnet	Plastic	
3	Rod metal	Aluminum alloy	Chromate	9	Piston	Aluminum alloy	Chromate
4	Rod metal gasket	Nitrile rubber		10	Piston packing	Nitrile rubber	
5	Body	Aluminum alloy	Hard alumite	11	Cover	Aluminum alloy	Alumite
6	Rod packing	Nitrile rubber		12	Bush	Oiles drymet	*1

*1: Material is steel for copper and PTFE free specifications.

Repair parts list

Bore size (mm)	Kit No.	Repair parts No.
ø63	SSD-63K	4 6 10
ø80	SSD-80K	
ø100	SSD-100K	

SCP*3
CMK2
CMA2
SCM
SCG
SCA2
SCS2
CKV2
CAV2/COVP/N2
SSD2
SSG
SSD
CAT
MDC2
MVC
SMG
MSD/MSDG
FC*
STK
SRL3
SRG3
SRM3
SRT3
MRL2
MRG2
SM-25
ShkAbs
FJ
FK
Spd Contr
Ending

Internal structure and parts list (ø125 to ø160) (with cushion)

● SSD-L-ø125 to ø160 (double acting/single rod/with switch)

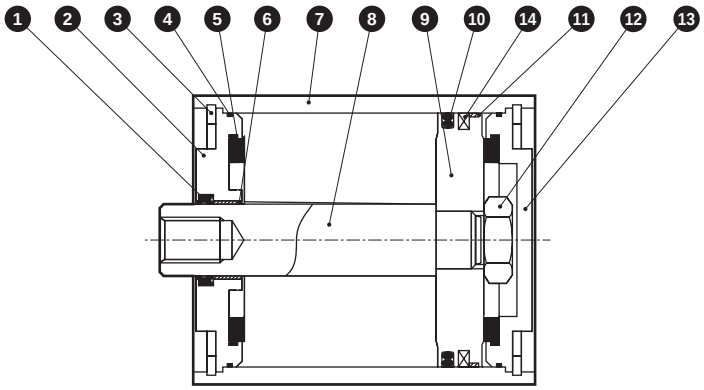

● SSD-L-ø125 to ø160 (double acting/single rod)

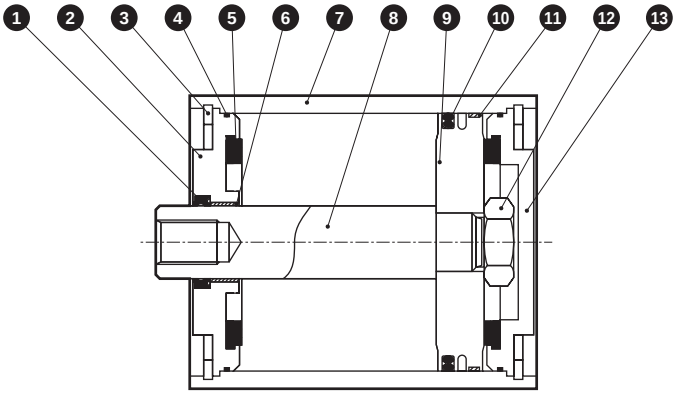

Part No.	Part name	Material	Remarks	Part No.	Part name	Material	Remarks
1	Rod packing	Nitrile rubber		9	Piston	Aluminum die-casting	
2	Rod metal	Aluminum die-casting	Chromate	10	Piston packing	Nitrile rubber	
3	C-snap ring	Steel	Zinc phosphate	11	Wear ring	Polyacetal resin	
4	Metal gasket	Nitrile rubber		12	Hexagon nut	Steel	Zinc chromate
5	Cushion rubber	Urethane rubber		13	Base plate	Aluminum die-casting	Chromate
6	Bush	Oiles drymet		14	Magnet	Rubber	SSD-L only
7	Body	Aluminum alloy	Hard alumite				
8	Piston rod	Steel	Industrial chrome plating				

Consumable parts list

Bore size(mm)	Kit No.	Consumable parts No.
ø125	SSD-125K	1 4 5 10 11
ø140	SSD-140K	
ø160	SSD-160K	

*1: Specify the kit No. when placing an order.

Internal structure and parts list (ø12 to ø32) (with rubber cushion)

● SSD-L-12D (double acting/with switch)

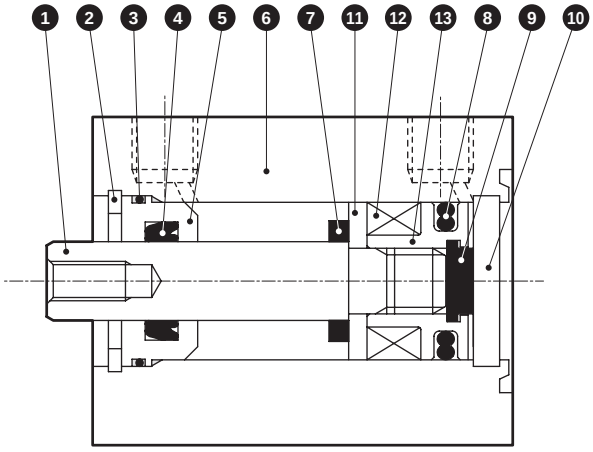

● SSD-L-16D to 32D (double acting/with switch)

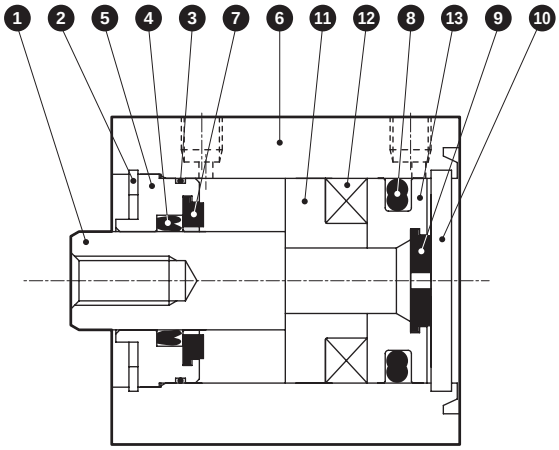

● SSD-12D (double acting)

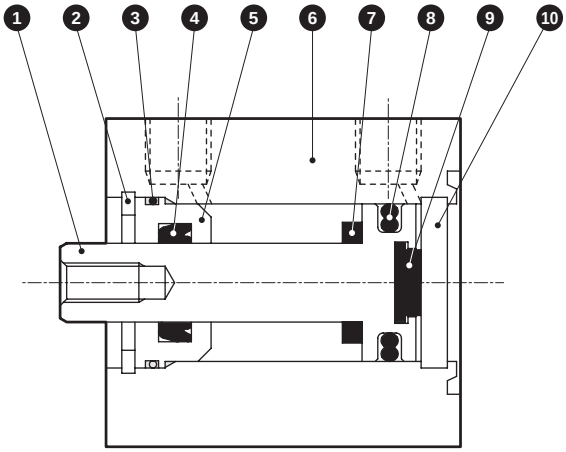

● SSD-16D to 32D (double acting)

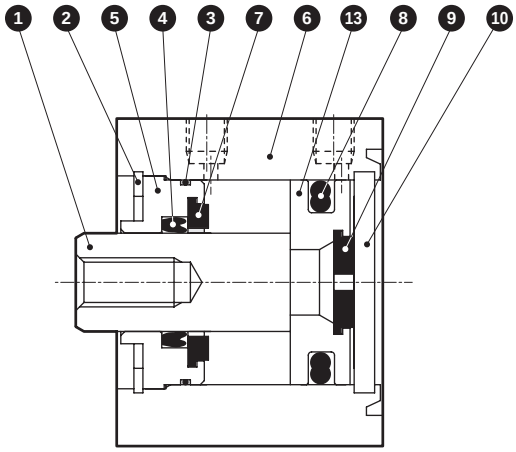

No.	Part name	Material	Remarks
1	Piston rod	ø12 to ø25: Stainless steel ø32: Steel	ø16 to ø32 Industrial chrome plating
2	C-snap ring	Steel	Zinc phosphate
3	Rod metal gasket	Nitrile rubber	
4	Rod packing	Nitrile rubber	
5	Rod metal	Aluminum alloy	Alumite
6	Body	Aluminum alloy	Hard alumite
7	Cushion rubber R	Urethane rubber	

No.	Part name	Material	Remarks
8	Piston packing	Nitrile rubber	
9	Cushion rubber H	Urethane rubber	
10	Cover	ø12 to ø25: Stainless steel ø32: Aluminum alloy	ø32: Alumite
11	Spacer	Aluminum alloy	Chromate
12	Magnet	Plastic	
13	Piston	Aluminum alloy	Chromate

Repair parts list

Bore size (mm)	Kit No.	Repair parts No.
ø12	SSD-12DK	❸ ❹ ❼ ❽ ❾
ø16	SSD-16DK	
ø20	SSD-20DK	
ø25	SSD-25DK	
ø32	SSD-32DK	

SCP*3
CMK2
CMA2
SCM
SCG
SCA2
SCS2
CKV2
CAV2/COVP/N2
SSD2
SSG
SSD
CAT
MDC2
MVC
SMG
MSD/MSDG
FC*
STK
SRL3
SRG3
SRM3
SRT3
MRL2
MRG2
SM-25
ShkAbs
FJ
FK
Spd Contr
Ending

Internal structure and parts list (ø40 to ø100) (with rubber cushion)

● SSD-L-40D to 50D (double acting/with switch)

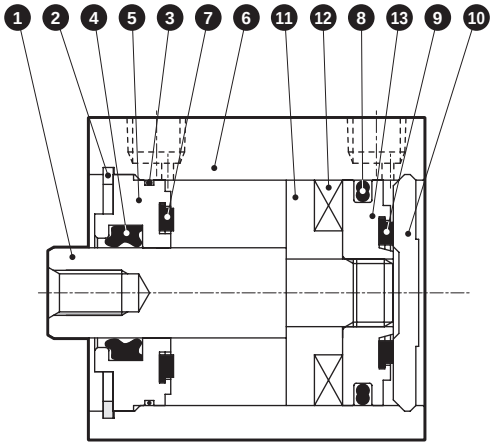

● SSD-L-63D to 100D (double acting/with switch)

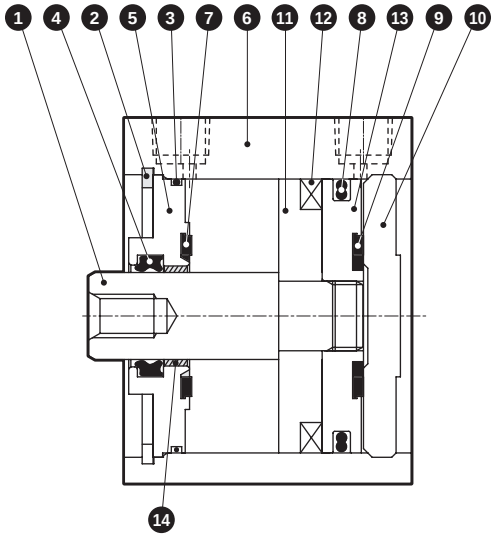

● SSD-40, 50D (double acting)

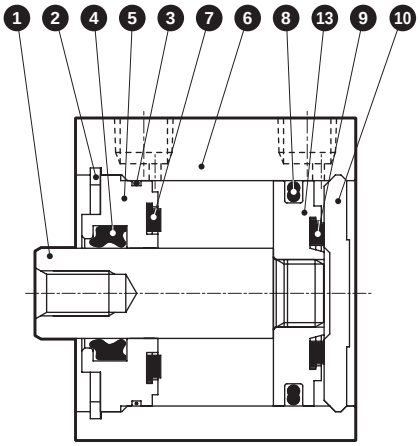

● SSD-63D to 100D (double acting)

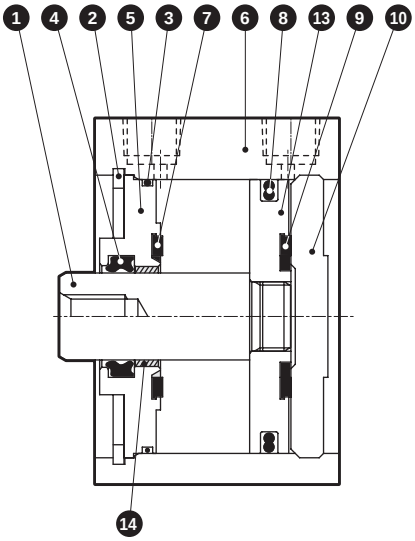

No.	Part name	Material	Remarks
1	Piston rod	Steel	Industrial chrome plating
2	C-snap ring	Steel	Zinc phosphate
3	Rod metal gasket	Nitrile rubber	
4	Rod packing	Nitrile rubber	
5	Rod metal	Aluminum alloy	ø40 to ø50: Alumite ø63 to ø100: Chromate
6	Body	Aluminum alloy	Hard alumite
7	Cushion rubber R	Urethane rubber	

No.	Part name	Material	Remarks
8	Piston packing	Nitrile rubber	
9	Cushion rubber H	Urethane rubber	
10	Cover	Aluminum alloy	Alumite
11	Spacer	Aluminum alloy	Chromate
12	Magnet	Plastic	
13	Piston	Aluminum alloy	Chromate
14	Bush	Oiles drymet	ø63 to ø100

Repair parts list

Bore size (mm)	Kit No.	Repair parts No.
ø40	SSD-40DK	❸ ❹ ❼ ❽ ❾
ø50	SSD-50DK	
ø63	SSD-63DK	
ø80	SSD-80DK	
ø100	SSD-100DK	

Dimensions

● SSD-L-12 to 25 (with switch, TO$^{H}/_{V}$, T5$^{H}/_{V}$, T2$^{H}/_{V}$, T3$^{H}/_{V}$, T2W$^{H}/_{V}$, T3W$^{H}/_{V}$)

ø12/ø16

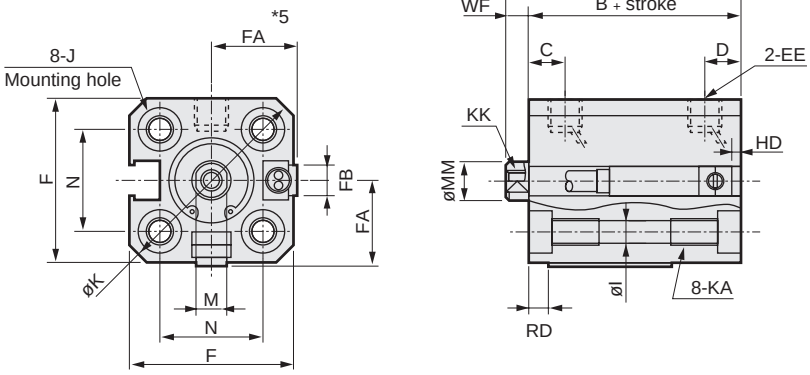

● Rod end male thread

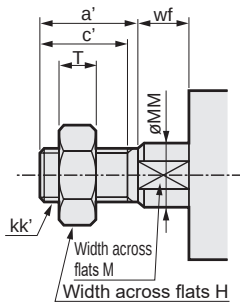

ø20/ø25

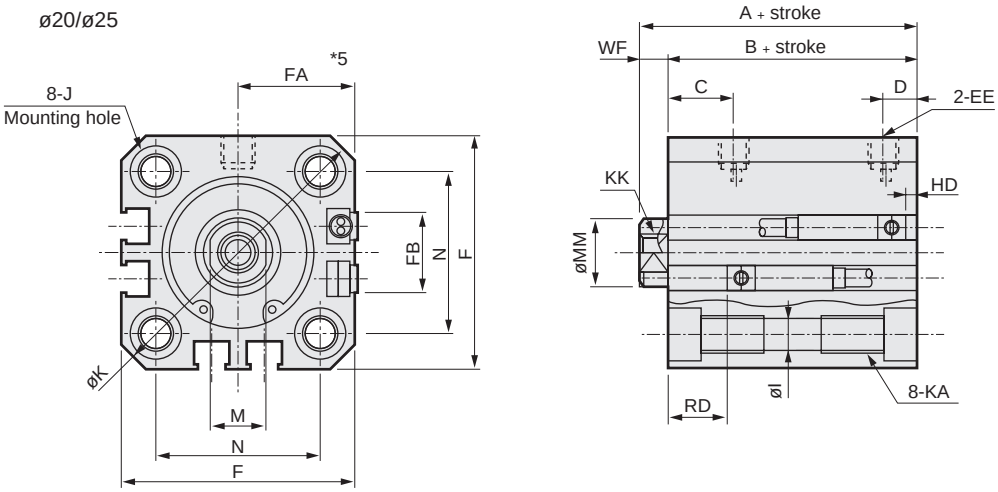

Code / Bore size (mm)	Common dimensions with switch																	
	A *1	B *1	C	D	EE	F	FA *5	FB	I	J	K	KA	KK	M	MM	N	WF
ø12	25.5	22	5.5	5.5	M5	25	13(16.5)	4.5	3.5	6.5 spot face depth 3.5	32	M4 depth 7	M3 depth 6	5	6	15.5	3.5
ø16	25.5	22	5.5	5.5	M5	29	15(18.5)	4.5	3.5	6.5 spot face depth 3.5	38	M4 depth 7	M4 depth 8	6	8	20	3.5
ø20	34	29.5	8	5.5	M5	36	18.5(22)	12.5	5.5	9 spot face depth 5.5	47	M6 depth 11	M5 depth 7	8	10	25.5	4.5
ø25	37.5	32.5	11	6	M5	40	20.5(24)	13.5	5.5	9 spot face depth 5.5	51	M6 depth 11	M6 depth 12	10	12	28	5

Switch dimensions / Bore size (mm)	Reed T0H/T0V, T5H/T5V		Proximity T2H/T2V, T3H/T3V T2WH/T2WV, T3WH/T3WV	
	HD *2	RD *2	HD *2	RD *2
ø12	0	2.5	0	2.5
ø16	0	2	0	2
ø20	3	6.5	3	6.5
ø25	3	9.5	3	9.5

*1 : To calculate A+ stroke or B+ stroke when using custom stroke, apply the next longer standard stroke (instead of the custom stroke) to the stroke value.
(Example) If the custom stroke is 7 mm, apply the standard stroke of 10 mm.
*2 : When the stroke is 5 mm for ø12 or ø16 with switch, (A + stroke) length and (B + stroke) length are as shown in the table.
*3 : HD and RD dimensions for 5 mm stroke differ from these dimensions according to the setting.
4 : Refer to page 1312 for HD, RD and protruding dimensions of the 2-color LED, off-delay, AC magnetic field proof, T1 and T8* switches.
*5 : Dimensions in ( ) of FA are for the L-shaped lead wire.
*6 : Refer to pages 1320 to 1325 for dimensions including the accessories and pages 1108 to 1115 for dimensions of individual accessories.

● When the stroke is 5 mm, dimensions are as below.

Bore size	A + stroke	B + stroke
ø12	35.5	32
ø16	35.5	32

● Rod end male thread

Code / Bore size (mm)	a'	c'	H	kk'	M	MM	T	wf
ø 12	10.5	9	8	M5	5	6	3.2	3.5
ø 16	12	10	10	M6	6	8	3.6	3.5
ø 20	14	12	13	M8	8	10	5	4.5
ø 25	17.5	15	17	M10x1.25	10	12	6	5

SCP*3
CMK2
CMA2
SCM
SCG
SCA2
SCS2
CKV2
CAV2/COVP/N2
SSD2
SSG
SSD
CAT
MDC2
MVC
SMG
MSD/MSDG
FC*
STK
SRL3
SRG3
SRM3
SRT3
MRL2
MRG2
SM-25
ShkAbs
FJ
FK
Spd Contr
Ending

Dimensions

● SSD-12 to 25 (without switch)

ø12/ø16

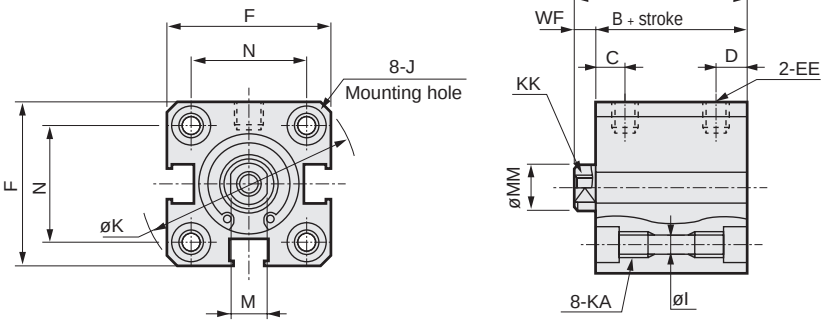

● Rod end male thread

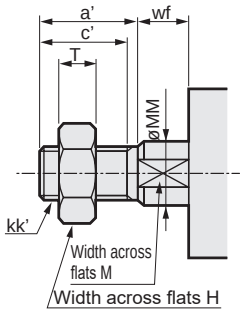

ø20/ø25

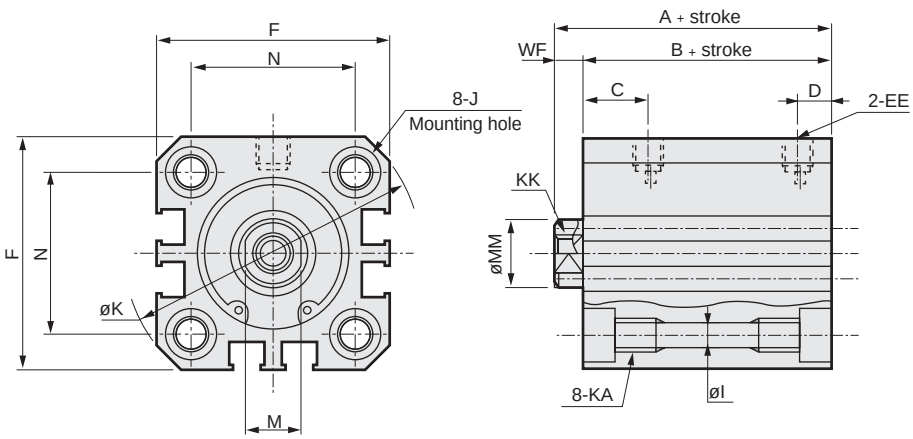

Code / Bore size (mm)	Dimensions without switch and common dimensions														
	A *1	B *1	C	D	EE	F	I	J	K	KA	KK	M	MM	N	WF
ø12	20.5	17	5.5	5.5	M5	25	3.5	6.5 spot face depth 3.5	32	M4 depth 7	M3 depth 6	5	6	15.5	3.5
ø16	20.5	17	5.5	5.5	M5	29	3.5	6.5 spot face depth 3.5	38	M4 depth 7	M4 depth 8	6	8	20	3.5
ø20	24	19.5	8	5.5	M5	36	5.5	9 spot face depth 5.5	47	M6 depth 11	M5 depth 7	8	10	25.5	4.5
ø25	27.5	22.5	11	6	M5	40	5.5	9 spot face depth 5.5	51	M6 depth 11	M6 depth 12	10	12	28	5

● Rod end male thread

Code / Bore size (mm)	a'	c'	H	kk'	M	MM	T	wf
ø 12	10.5	9	8	M5	5	6	3.2	3.5
ø 16	12	10	10	M6	6	8	3.6	3.5
ø 20	14	12	13	M8	8	10	5	4.5
ø 25	17.5	15	17	M10x1.25	10	12	6	5

*1 : To calculate A+ stroke or B+ stroke when using custom stroke, apply the next longer standard stroke (instead of the custom stroke) to the stroke value.
(Example) If the custom stroke is 7 mm, apply the standard stroke of 10 mm.

*2 : Refer to pages 1320 to 1325 for dimensions including the accessories and pages 1108 to 1115 for dimensions of individual accessories.

Dimensions

● SSD-L-32 to 100 (with switch, TO$^{H}/_{V}$, T5$^{H}/_{V}$, T2$^{H}/_{V}$, T3$^{H}/_{V}$, T2W$^{H}/_{V}$, T3W$^{H}/_{V}$)

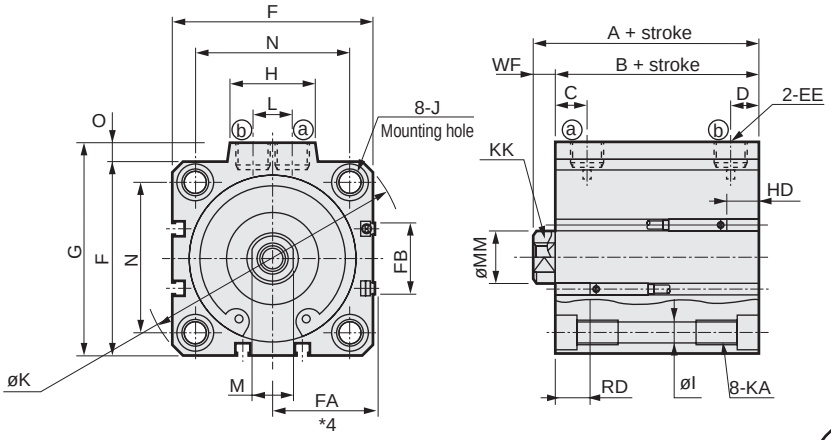

● Rod end male thread

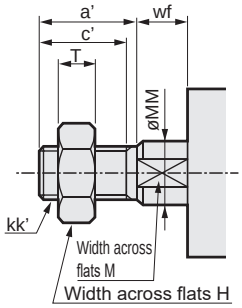

[Bore size ø100]

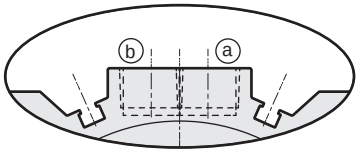

* Only for ø100, the port surface has switch grooves.

● SSD-32 to 100 (without switch)

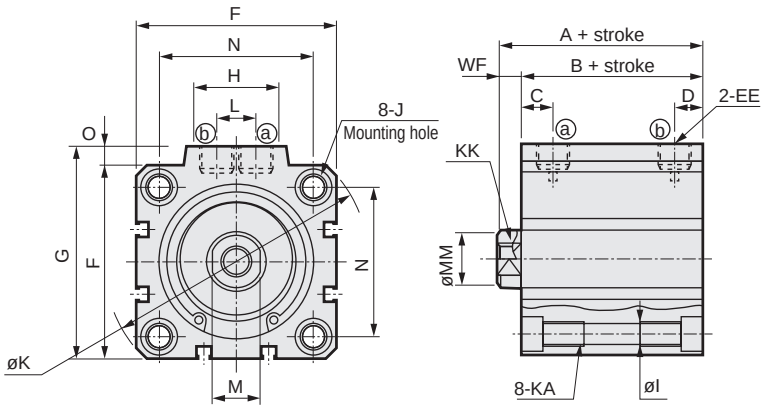

Code / Bore size (mm)	No switch A *1	No switch B *1	Common dimensions with switch A *1	B *1	C	D	EE	F	FA *4	FB	G	H	I	J	K	KA	KK	L	M	MM	N	O	WF
ø32	30	23	40	33	8	8	Rc 1/8	45	23(26.5)	20.5	49.5	24	5.5	9 spot face Depth 5.5	60	M6 depth 11	M8 depth 13	10	14	16	34	4.5	7
ø40	36.5	29.5	46.5	39.5	12	8.5	Rc 1/8	52	26.5(30)	27.5	57	24	5.5	9 spot face Depth 5.5	69	M6 depth 11	M8 depth 13	10	14	16	40	5	7
ø50	38.5	30.5	48.5	40.5	10.5	10.5	Rc 1/4	64	32.5(36)	28.5	71	33	6.9	11 spot face Depth 6.5	86	M8 depth 13	M10 depth 15	15	17	20	50	7	8
ø63	44	36	54	46	13	11	Rc 1/4	77	39(42.5)	28.5	84	33	8.7	14 spot face Depth 9	103	M10 depth 25	M10 depth 15	15	17	20	60	7	8
ø80	53.5	43.5	63.5	53.5	16	13	Rc 3/8	98	49.5(53)	28.5	104	38	10.5	17.5 spot face Depth 11	132	M12 depth 28	M16 depth 21	15	22	25	77	6	10
ø100	65	53	75	63	23	15	Rc 3/8	117	59(62.5)	28.5	123.5	38	10.5	17.5 spot face Depth 11	156	M12 depth 28	M20 depth 27	15	27	30	94	6.5	12

Switch dimensions / Bore size (mm)	Reed T0H/T0V, T5H/T5V HD *2	Reed T0H/T0V, T5H/T5V RD *2	Proximity T2H/T2V, T3H/T3V T2WH/T2WV, T3WH/T3WV HD *2	Proximity T2H/T2V, T3H/T3V T2WH/T2WV, T3WH/T3WV RD *2
ø32	3.5	9	3.5	9
ø40	7	12	7	12
ø50	7.5	12.5	7.5	12.5
ø63	12.5	13	12.5	13
ø80	17.5	15.5	17.5	15.5
ø100	23	19.5	23	19.5

*1 : To calculate A+ stroke or B+ stroke when using custom stroke, apply the next longer standard stroke (instead of the custom stroke) to the stroke value. (Example) If the custom stroke is 7 mm, apply the standard stroke of 10 mm.
*2 : HD and RD dimensions for 5 mm stroke differ from these dimensions according to the setting.
3 : Refer to page 1313 for HD, RD and protruding dimensions of the 2-color LED, off-delay, AC magnetic field proof, T1 and T8* switches.
*4 : Dimensions in ( ) of FA are for the L-shaped lead wire.
*5 : Refer to pages 1320 to 1325 for dimensions including the accessories and pages 1108 to 1115 for dimensions of individual accessories.

● Rod end male thread

Code / Bore size (mm)	a'	c'	H	kk'	M	MM	T	wf
ø 32	23.5	20.5	22	M14x1.5	14	16	8	5
ø 40	23.5	20.5	22	M14x1.5	14	16	8	5
ø 50	28.5	26	27	M18x1.5	17	20	11	5
ø 63	28.5	26	27	M18x1.5	17	20	11	5
ø 80	35.5	32.5	32	M22x1.5	22	25	13	8
ø100	35.5	32.5	41	M26x1.5	27	30	16	8

SCP*3
CMK2
CMA2
SCM
SCG
SCA2
SCS2
CKV2
CAV2/COVP/N2
SSD2
SSG
SSD
CAT
MDC2
MVC
SMG
MSD/MSDG
FC*
STK
SRL3
SRG3
SRM3
SRT3
MRL2
MRG2
SM-25
ShkAbs
FJ
FK
Spd Contr
Ending

Dimensions CAD

● SSD-L-125 to 160 (double acting/with switch)

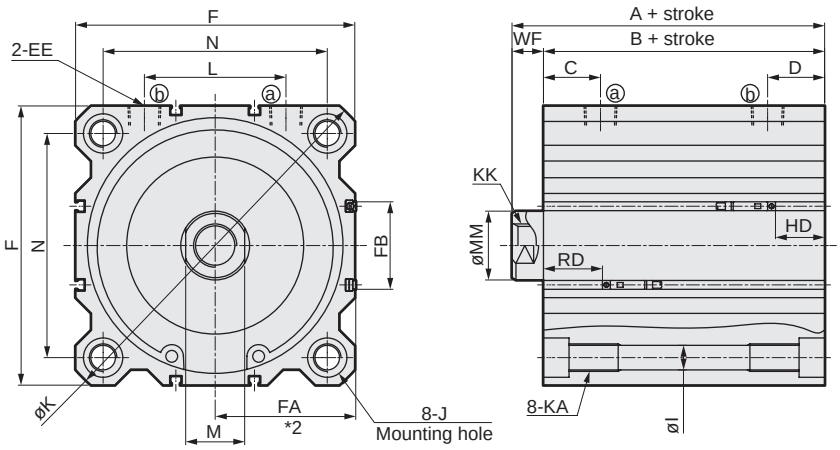

● Rod end male thread

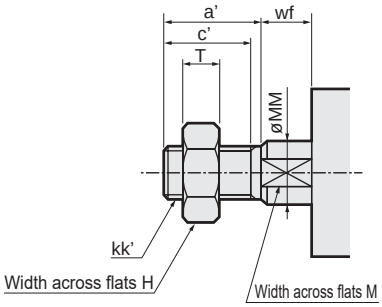

● SSD-125 to 160 (double acting)

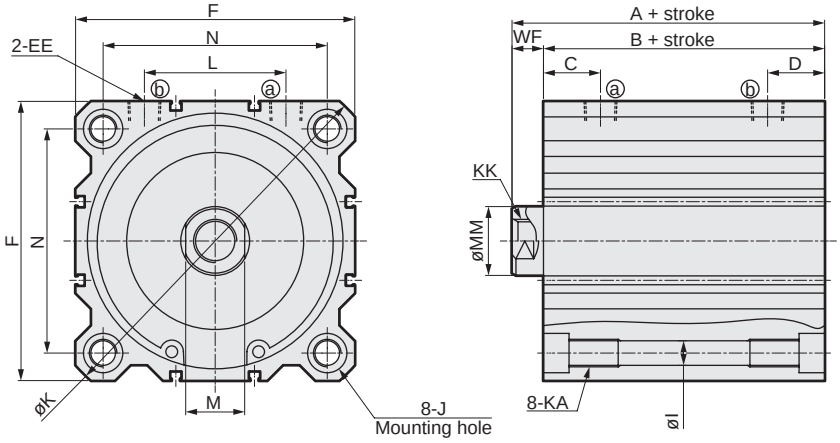

Code / Bore size (mm)	Common dimensions with switch												
	A	B	C	D	EE	F	FA	FB	I	J	K	KA	KK
ø125	88	72	23.5	23.5	Rc3/8	142	71.5(75)	44.5	12.5	20 spot face depth 13	190	M14 depth 25	M22 depth 30
ø140	98	82	27	27	Rc3/8	158	79.5(83)	44.5	12.5	20 spot face depth 13	210	M14 depth 25	M22 depth 30
ø160	108	91	30	30	Rc3/8	178	89.5(93)	48.5	14.7	23 spot face depth 15.2	238	M16 depth 28	M24 depth 33

Switch dimensions						Reed T0H/T0V, T5H/T5V		Proximity T2H/T2V, T3H/T3V T2WH/T2WV, T3WH/T3WV	
Bore size (mm)	L	M	MM	N	WF	HD	RD	HD	RD
ø125	72	30	35	114	16	24.5	29.5	24.5	29.5
ø140	80	30	35	128	16	31	33	31	33
ø160	90	36	40	144	17	34	39	34	39

● *1 : Refer to page 1313 for HD and RD dimensions of 2-color LED switches.
● *2 : Dimensions in ( ) of FA are for the L-shaped lead wire.
● *3 : Refer to pages 1320 to 1325 for dimensions including the accessories and pages 1108 to 1115 for dimensions of individual accessories.

Dimensions of rod end male thread

Code / Bore size (mm)	a'	c'	H	kk'	M	MM	T	wf
ø125	45	42	46	M30x1.5	30	35	18	13
ø140	45	42	46	M30x1.5	30	35	18	13
ø160	50	47	55	M36x1.5	36	40	21	14

MEMO

SCP*3
CMK2
CMA2
SCM
SCG
SCA2
SCS2
CKV2
CAV2/ COVP/N2
SSD2
SSG
SSD
CAT
MDC2
MVC
SMG
MSD/ MSDG
FC*
STK
SRL3
SRG3
SRM3
SRT3
MRL2
MRG2
SM-25
ShkAbs
FJ
FK
Spd Contr
Ending

Dimensions (Mounting bracket: LB)

● Mounting bracket Axial foot (LB)

·ø12 to ø32 Material: Steel
Zinc chromate treatment

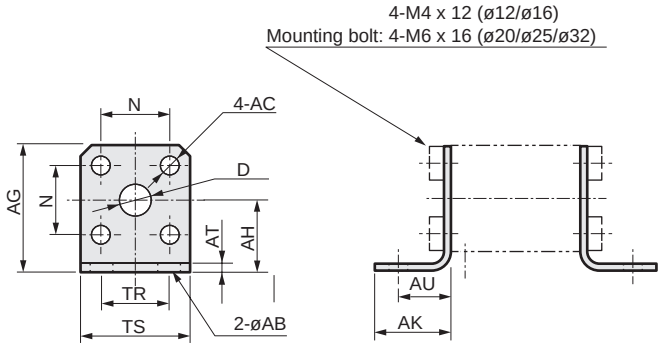

* 8 hexagon socket head cap screws are included for installation. 2 pieces are included in a set.

Model No.	Applicable bore size	AB	AC	AG	AH	AK	AT	AU	D	N	TR	TS	Wt (g)
SSD-LB-12	ø12	6	4.5	29.5	17	18	2.3	12	8	15.5	16	25	40
SSD-LB-16	ø16	6	4.5	33.5	19	18	2.3	12	10	20	16	29	50
SSD-LB-20	ø20	7	6.5	42	24	24	3.2	16	12	25.5	24	36	140
SSD-LB-25	ø25	7	6.5	46	26	24	3.2	16	14	28	28	40	150
SSD-LB-32	ø32	7	6.5	53.5	31	24	3.2	16	18	34	34	45	180

Note) Axial foot (LB) cannot be mounted on SSD-W or SSD-B.

·ø40 to ø100 Material: Steel
Zinc chromate treatment

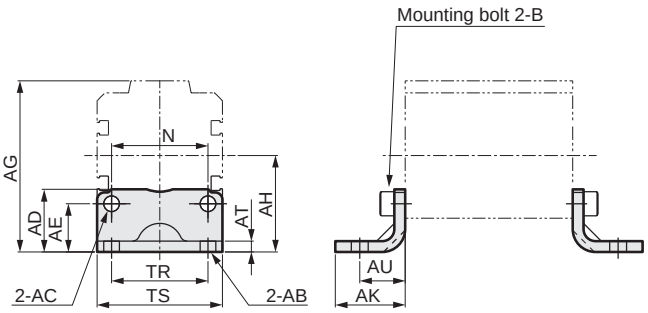

* 4 hexagon socket head cap screws are included for installation. 2 pieces are included in a set.

Model No.	Bore size	AB	AC	AD	AE	AG	AH	AK	AT	AU	B	N	TR	TS	Wt (g)
SSD-LB- 40	ø40	7	6.5	26	20	71	40	29	4.5	19	M6x16	40	40	52	170
SSD-LB- 50	ø50	9	9	23	15	79	40	34	4.5	22	M8x20	50	46	64	270
SSD-LB- 63	ø63	11	11	33	21	96.5	51	40	4.5	25	M10x25	60	60	77	420
SSD-LB- 80	ø80	13	13	42	23	116.5	61.5	50	6	35	M12x40	77	77	98	890
SSD-LB-100	ø100	13	13	48	22	134	69	50	6	35	M12x40	94	94	117	1050

· ø125 to ø160 Material: Steel
Zinc chromate treatment

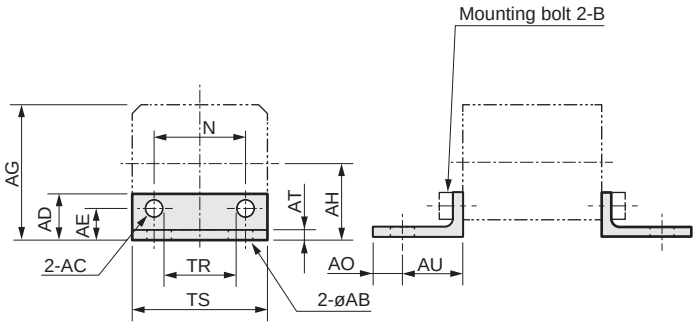

* 4 hexagon socket head cap screws are included for installation. 2 pieces are included in a set.

Model No.	Bore size	AB	AC	AD	AE	AG	AH	AO	AT	AU	B	N	TR	TS	Wt (g)
SSD-LB-125	ø125	19	14.5	43	28	156	85	20	7	45	M14x40	114	100	142	1750
SSD-LB-140	ø140	19	14.5	51	36	179	100	20	8	50	M14x40	128	112	158	2400
SSD-LB-160	ø160	19	16.5	52	34	195	106	20	10	53	M16x50	144	118	178	3500

Dimensions (Mounting bracket: LB2)

● Axial foot (LB2)

· ø12 to ø25 Material: Steel
Zinc chromate treatment

· ø32 to ø100 Material: Steel
Zinc chromate treatment

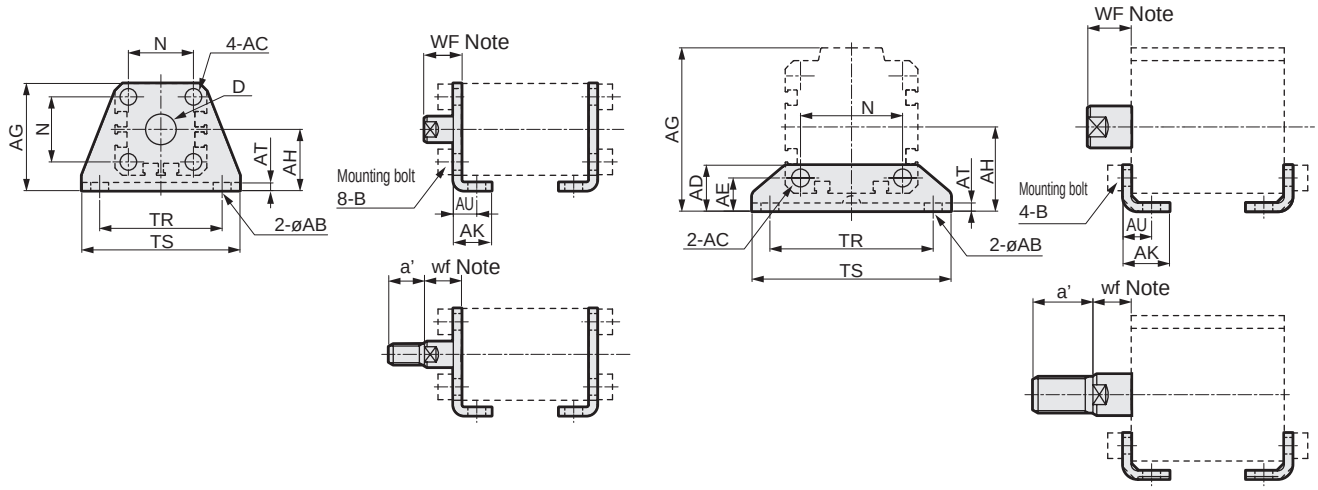

*1: Hex socket mounting bolts are included.

Model No.	Bore size	AB	AC	AD	AE	AG	AH	AK	AT	AU	B	D	N	TR	TS	WF	wf	a'	Wt (g)
SSD-LB2-12	ø12	5	4.5	-	-	29.5	17	12.5	2	8	M4x10	8	15.5	34	44	13.5	13.5	10.5	51
SSD-LB2-16	ø16	5	4.5	-	-	33.5	19	13	2	8	M4x10	10	20	38	48	13.5(18.5)	13.5(18.5)	12	61
SSD-LB2-20	ø20	7	6.5	-	-	42	24	15	3.2	9.2	M6x16	12	25.5	48	62	14.5(19.5)	14.5(19.5)	14	161
SSD-LB2-25	ø25	7	6.5	-	-	46	26	16.5	3.2	10.7	M6x16	14	28	52	66	15(20)	15(20)	17.5	176
SSD-LB2-32	ø32	7	7	18.5	13	57	30	17	3.2	11.2	M6x16	-	34	57	71	17(22)	15(20)	23.5	107
SSD-LB2-40	ø40	7	7	18	13	64	33	18.2	3.2	11.2	M6x16	-	40	64	78	17(22)	15(20)	23.5	121
SSD-LB2-50	ø50	9	9	22	14	78	39	22.7	3.2	14.7	M8x20	-	50	79	95	18(23)	15(20)	28.5	201
SSD-LB2-63	ø63	11	11	26	16	91.5	46	25.2	3.2	16.2	M10x25	-	60	95	113	18(23)	15(20)	28.5	314
SSD-LB2-80	ø80	13	13	31.5	20.5	114	59	30.5	4.5	19.5	M12x40	-	77	118	140	20(25)	18(23)	35.5	678
SSD-LB2-100	ø100	13	13	35	24	136	71	35.5	6	23	M12x40	-	94	137	162	22(27)	18(23)	35.5	1198

*1 : The WF/wf dimension of the cylinder for LB2 is set 10 mm longer than that of standard products. Contact CKD for the cylinder model No. when ordering individual cylinders and LB2 brackets.
*2 : Dimensions in ( ) of WF/wf are dimensions for SSD-G2/G3.

Dimensions (Mounting bracket: FA, FB)

● Rod side flange (FA)

· ø12 to ø25

Material: Steel
Zinc chromate treatment

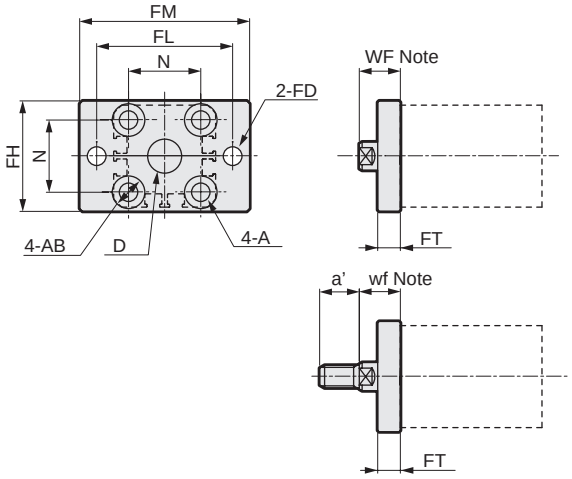

· ø32 to ø100

Material: Steel
Zinc chromate treatment

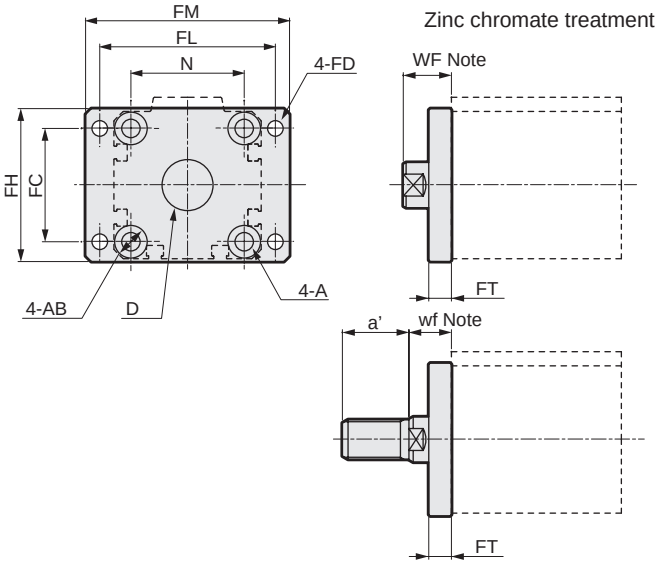

*1: Mounting bolts are included.

Model No.	Bore size	FC	FD	FH	FL	FM	FT	A	AB	D	N	WF	wf	a'	Wt (g)
SSD-FA-12	ø12	-	4.5	25	45	55	5.5	4.5	8.5 spot face depth 2.7	8	15.5	13.5	13.5	10.5	54
SSD-FA-16	ø16	-	4.5	30	45	55	5.5	4.5	8.5 spot face depth 2.7	10	20	13.5(18.5)	13.5(18.5)	12	64
SSD-FA-20	ø20	-	6.6	39	48	60	8	6.5	11.5 spot face depth 3.8	12	25.5	14.5(19.5)	14.5(19.5)	14	129
SSD-FA-25	ø25	-	6.6	42	52	64	8	6.5	11.5 spot face depth 3.8	14	28	15(20)	15(20)	17.5	148
SSD-FA-32	ø32	34	5.5	48	56	65	8	6.5	11.5 spot face depth 3.8	22	34	17(22)	15(20)	23.5	167
SSD-FA-40	ø40	40	5.5	54	62	72	8	6.5	11.5 spot face depth 3.8	28	40	17(22)	15(20)	23.5	215
SSD-FA-50	ø50	50	6.6	67	76	89	9	9	15 spot face depth 5	35	50	18(23)	15(20)	28.5	387
SSD-FA-63	ø63	60	9	80	92	108	9	11	18 spot face depth 6	35	60	18(23)	15(20)	28.5	573
SSD-FA-80	ø80	77	11	99	116	134	11	13	19 spot face depth 7.5	43	77	20(25)	18(23)	35.5	1132
SSD-FA-100	ø100	94	11	117	136	154	11	13	19 spot face depth 7.5	59	94	22(27)	18(23)	35.5	1522

*1: The WF/wf dimension of the cylinder for FA is set 10 mm longer than that of standard products. Contact CKD for the cylinder model No. when ordering individual cylinders and FA brackets.
*2: Dimensions in ( ) of WF/wf are dimensions for SSD-G2/G3.

● Head side flange (FB)

· ø12 to ø25

Material: Steel
Zinc chromate treatment

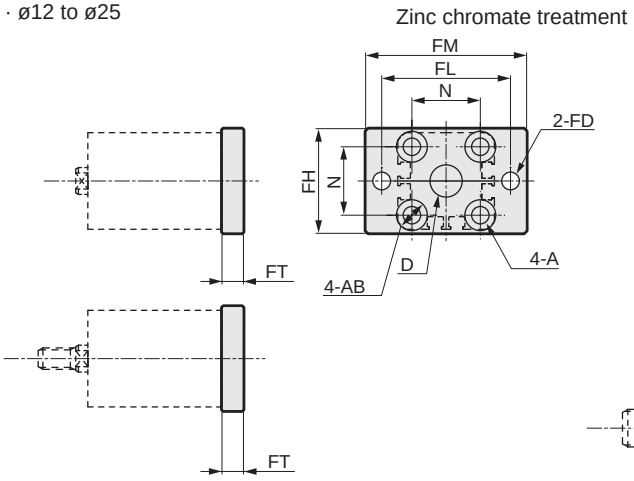

· ø32 to ø100

Material: Steel, zinc chromate treatment

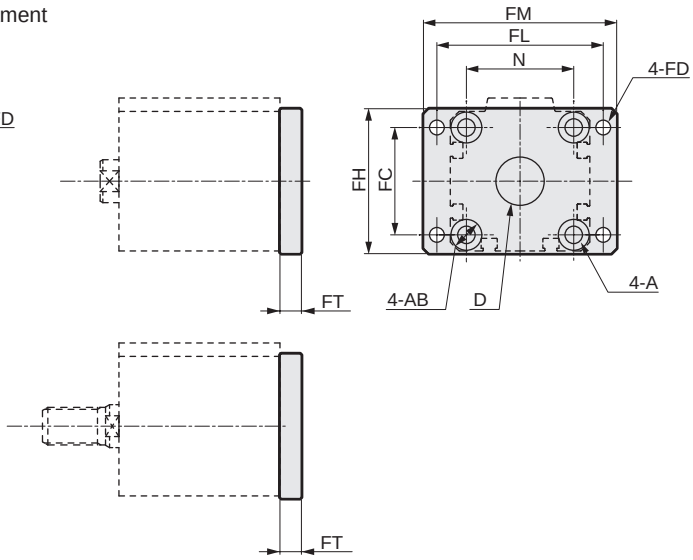

*1: Mounting bolts are included.

Model No.	Bore size	FC	FD	FH	FL	FM	FT	A	AB	D	N	Wt (g)
SSD-FB-12	ø12	-	4.5	25	45	55	5.5	4.5	8.5 spot face depth 2.7	8	15.5	54
SSD-FB-16	ø16	-	4.5	30	45	55	5.5	4.5	8.5 spot face depth 2.7	10	20	64
SSD-FB-20	ø20	-	6.6	39	48	60	8	6.5	11.5 spot face depth 3.8	12	25.5	129
SSD-FB-25	ø25	-	6.6	42	52	64	8	6.5	11.5 spot face depth 3.8	14	28	148
SSD-FB-32	ø32	34	5.5	48	56	65	8	6.5	11.5 spot face depth 3.8	22	34	167
SSD-FB-40	ø40	40	5.5	54	62	72	8	6.5	11.5 spot face depth 3.8	28	40	215
SSD-FB-50	ø50	50	6.6	67	76	89	9	9	15 spot face depth 5	35	50	387
SSD-FB-63	ø63	60	9	80	92	108	9	11	18 spot face depth 6	35	60	573
SSD-FB-80	ø80	77	11	99	116	134	11	13	19 spot face depth 7.5	43	77	1132
SSD-FB-100	ø100	94	11	117	136	154	11	13	19 spot face depth 7.5	59	94	1522

Dimensions (Mounting bracket: CB)

● Mounting bracket Clevis bracket (CB)

* Pin (including C-ring) and snap ring are included.
* When used for oscillation, a high load cylinder is recommended.

Note) Clevis bracket (CB) cannot be mounted on SSD-B, SSD-D or SSD-W.

Material: Cast iron
Painted

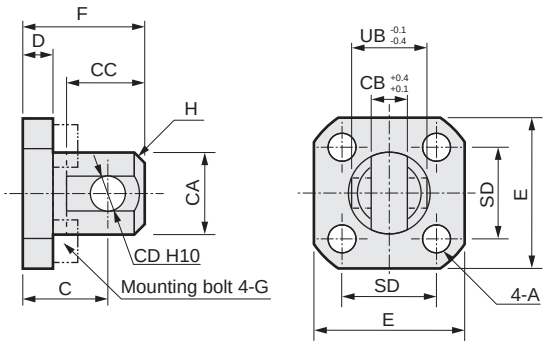

* 4 hexagon socket head cap screws are included for installation.

Model No.	Bore size	A	C	CA	CB	CC	CD	D	E	F	G	H	SD	UB	Wt (g)
SSD-CB-12	ø12	4.5	14	13.5	6.5	13	5	5	25	20	M4x12	C1.5	15.5	12	35
SSD-CB-16	ø16	4.5	15	15	6.5	14	5	5	29	21	M4x12	C2	20	12	45
SSD-CB-20	ø20	6.5	23	24	8	22	10	8	36	33	M6x20	C4	25.5	19	140
SSD-CB-25	ø25	6.5	27	27.5	10	28	12	8	40	39	M6x20	C5	28	21	180

· ø32 to ø100

Material: Cast iron
Painted

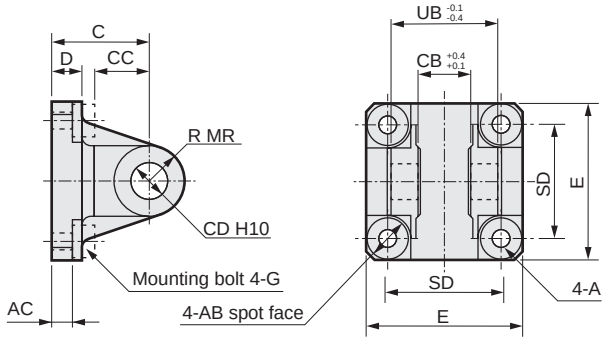

* 4 hexagon socket head cap screws are included for installation.

Model No.	Bore size	A	AB	AC	C	CB	CC	CD	D	E	G	MR	SD	UB	Wt (g)
SSD-CB- 32	ø32	6.5	13	9.5	30	10	16	12	10	45	M6x20	R12	34	21	230
SSD-CB- 40	ø40	6.5	14	6.5	32	18	18	12	10	52	M6x20	R12	40	36	290
SSD-CB- 50	ø50	9	16	6.5	32	18	18	12	10	64	M8x20	R12	50	36	390
SSD-CB- 63	ø63	11	20	7.5	37	20	24	14	10	77	M10x25	R16	60	40	630
SSD-CB- 80	ø80	14	20	10.5	52	28	30	20	14	98	M12x40	R20	77	56	1530
SSD-CB-100	ø100	14	20	10.5	52	28	30	20	16	118	M12x40	R20	94	56	1900

● Clevis bracket (CB)

Material: Cast iron
Painted

· ø125 to ø160

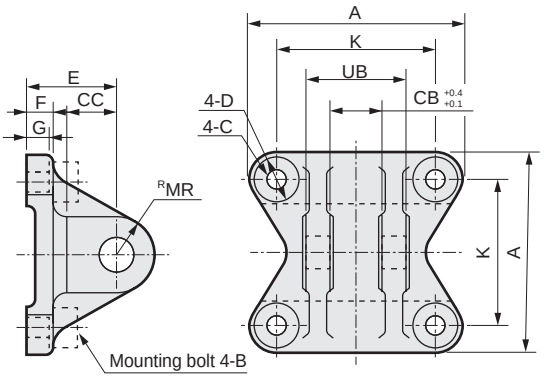

* A pin and a snap ring are included.
* 4 hexagon socket head cap screws are included for installation.

Model No.	Bore size	A	B	C	CB	CC	CD
SSD-CB-125	ø125	140	M14x50	16	32	35	25
SSD-CB-140	ø140	154	M14x50	16	36	40	28
SSD-CB-160	ø160	174	M16x60	18	40	40	32

Model No.	Bore size	D	E	F	G	K	MR	UB	Weight (g)
SSD-CB-125	ø125	23	63	20	18	114	25	64	3000
SSD-CB-140	ø140	23	75	22	20	128	28	72	4200
SSD-CB-160	ø160	26	75	24	22	144	32	80	6000

● Clevis bracket (CB) included pin dimensions table

· ø12 to ø100

Material: Steel
Zinc chromate treatment

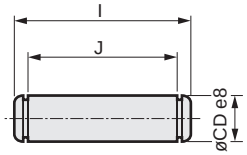

Model No.	Applicable bore size	I	J	CD	Applicable snap ring	Weight (g)
SSD-P-12	ø12	18	13	5	E type 4	2.8
SSD-P-16	ø16	18	13	5	E type 4	2.8
SSD-P-20	ø20	25	20	10	E type 9	17
SSD-P-25	ø25	27	22	12	E type 9	25
SSD-P-32	ø32	27	22	12	E type 9	25
SSD-P-40	ø40	43.5	36.2	12	C type for shaft 12	39
SSD-P-50	ø50	43.5	36.2	12	C type for shaft 12	39
SSD-P-63	ø63	47.5	40.2	14	C type for shaft 14	58
SSD-P-80	ø80	64	56.2	20	C type for shaft 20	156
SSD-P-100	ø100	64	56.2	20	C type for shaft 20	156

· ø125 to ø160

Material: Steel
Zinc chromate treatment

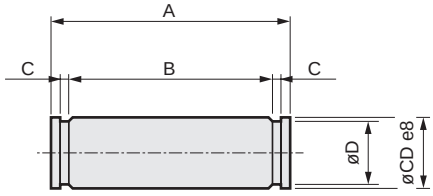

Model No.	Bore size	A	B	C	CD	D	Shaft snap ring	Weight (g)
SSD-P-125	ø125	75	66.3	1.35	25	23.9	C type for shaft 25	250
SSD-P-140	ø140	84	74.7	1.65	28	26.6	C type for shaft 28	400
SSD-P-160	ø160	92	82.7	1.65	32	30.3	C type for shaft 32	500

SCP*3
CMK2
CMA2
SCM
SCG
SCA2
SCS2
CKV2
CAV2/ COVP/N2
SSD2
SSG
SSD
CAT
MDC2
MVC
SMG
MSD/ MSDG
FC*
STK
SRL3
SRG3
SRM3
SRT3
MRL2
MRG2
SM-25
ShkAbs
FJ
FK
Spd Contr
Ending

Dimensions (Mounting bracket: CB2)

● Clevis bracket (CB2)

· ø12 to ø25

Material: Cast iron
Painted

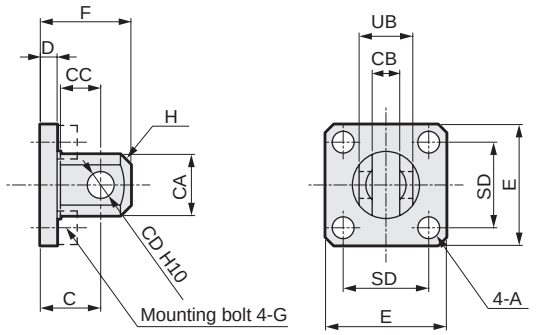

· ø32 to ø100

Material: Cast iron
Painted

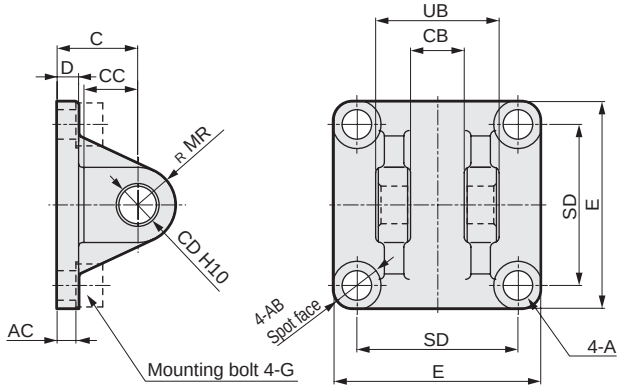

*1: Hex socket mounting bolts, pins (including C-rings), and snap rings are included.

Model No.	Bore size	A	AB	AC	C	CA	CB	CC	CD	D	E	F	G	H	MR	SD	UB	Wt (g)
SSD-CB2-12	ø12	4.5	-	-	14	12	$5.2^{+0.2}_{0}$	7	$5^{+0.048}_{0}$	4	25	20	M4x12	C1.5	-	15.5	$10^{-0.1}_{-0.3}$	28
SSD-CB2-16	ø16	4.5	-	-	15	15	$6.6^{+0.3}_{0}$	8	$5^{+0.048}_{0}$	5	29	21	M4x12	C2	-	20	$12^{-0.1}_{-0.4}$	43
SSD-CB2-20	ø20	6.5	-	-	18	20	$8.2^{+0.2}_{0}$	12	$8^{+0.058}_{0}$	5	36	27	M6x16	C4	-	25.5	$16^{-0.1}_{-0.3}$	84
SSD-CB2-25	ø25	6.5	-	-	20	24	$10.2^{+0.2}_{0}$	14	$10^{+0.058}_{0}$	5	40	30	M6x16	C5	-	28	$20^{-0.1}_{-0.3}$	110
SSD-CB2-32	ø32	6.6	13	4.5	20	-	$18.2^{+0.2}_{0}$	14	$10^{+0.058}_{0}$	5	45	30	M6x16	-	10	34	$36^{-0.1}_{-0.3}$	159
SSD-CB2-40	ø40	6.6	14	5	22	-	$18.2^{+0.2}_{0}$	14	$10^{+0.058}_{0}$	6	52	32	M6x16	-	10	40	$36^{-0.1}_{-0.3}$	207
SSD-CB2-50	ø50	9	16	6	28	-	$22.2^{+0.2}_{0}$	20	$14^{+0.070}_{0}$	7	64	42	M8x20	-	14	50	$44^{-0.1}_{-0.3}$	420
SSD-CB2-63	ø63	11	18	7	30	-	$22.2^{+0.2}_{0}$	20	$14^{+0.070}_{0}$	8	77	44	M10x25	-	14	60	$44^{-0.1}_{-0.3}$	605
SSD-CB2-80	ø80	13.5	23	9	38	-	$28.2^{+0.2}_{0}$	27	$18^{+0.070}_{0}$	10	98	56	M12x40	-	18	77	$56^{-0.1}_{-0.3}$	1222
SSD-CB2-100	ø100	13.5	20	12	45	-	$32.2^{+0.2}_{0}$	31	$22^{+0.084}_{0}$	13	117	67	M12x40	-	22	94	$64^{-0.1}_{-0.3}$	2031

● Clevis bracket (CB2) included pin dimensions table (P2)

Material: Steel
Zinc chromate treatment

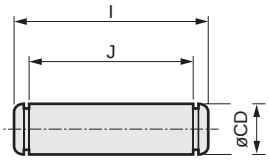

Model No.	Applicable bore size	I	J	CD	Applicable snap ring	Weight (g)
SSD-P2-12	ø12	15.2	10.2	$5^{-0.01}_{-0.028}$	E type 4	2.4
SSD-P2-16	ø16	18	13	$5^{-0.01}_{-0.028}$	E type 4	2.8
SSD-P2-20	ø20	21	16.2	$8^{-0.025}_{-0.047}$	C type for shaft 8	8.2
SSD-P2-25	ø25	25.6	20.2	$10^{-0.025}_{-0.047}$	C type for shaft 10	16
SSD-P2-32	ø32/ø40	41.6	36.2	$10^{-0.025}_{-0.047}$	C type for shaft 10	25
SSD-P2-50	ø50/ø63	50.6	44.2	$14^{-0.032}_{-0.059}$	C type for shaft 14	60
SSD-P2-80	ø80	64	56.2	$18^{-0.032}_{-0.059}$	C type for shaft 18	124
SSD-P2-100	ø100	72	64.2	$22^{-0.040}_{-0.083}$	C type for shaft 22	213

Dimensions (Accessory: I, I2)

● Rod eye (I)

· ø12, ø16, ø40, ø50, ø63, ø80, ø100

Material: ø12 to ø25 Steel
ø32 to ø160 Cast iron
ø12 to ø32
Zinc chromate treatment
ø40 to ø100 Coating

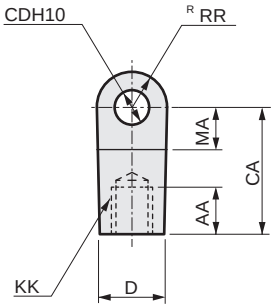

· ø20, ø25, ø32, ø125, ø140, ø160

Material: ø12 to ø25 Steel
ø32 to ø160 Cast iron
ø12 to ø32
Zinc chromate treatment
ø40 to ø100 Coating

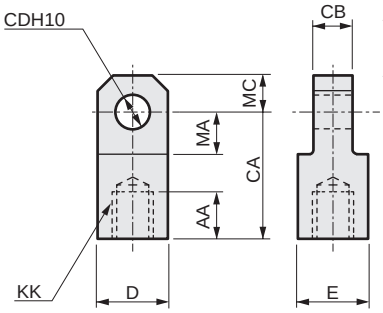

Model No.	Applicable bore size (mm)	AA	CA	CB	CD	D	E	KK	MA	MC	RR	Weight (g)
P2-I-16	12	8	25	$6.4^{0}_{-0.1}$	$5^{+0.048}_{0}$	12	12	M5	14	-	10	21
SSD-I-16	16	8	25	$6.5^{-0.1}_{-0.2}$	$5^{+0.048}_{0}$	12	12	M6	14	-	10	21
SSD-I-20	20	13.5	30	$8^{-0.1}_{-0.2}$	$10^{+0.058}_{0}$	19	19	M8	13	10	-	65
M1-I-30	25	14	36	$10^{-0.1}_{-0.2}$	$12^{+0.070}_{0}$	25	19	M10x1.25	16	12	-	106
SSD-I-32	32	15	36	$10^{-0.1}_{-0.2}$	$12^{+0.070}_{0}$	25	19	M14x1.5	16	12	-	106
SSD-I-40	40	20	50	$18^{-0.1}_{-0.4}$	$12^{+0.070}_{0}$	27	27	M14x1.5	21	-	16	260
SSD-I-50	50	21	50	$18^{-0.1}_{-0.4}$	$12^{+0.070}_{0}$	27	27	M18x1.5	21	-	16	240
SSD-I-63	63	21	50	$20^{-0.1}_{-0.4}$	$14^{+0.070}_{0}$	27	27	M18x1.5	21	-	16	250
SSD-I-80	80	30	70	$28^{-0.1}_{-0.4}$	$20^{+0.084}_{0}$	46	41	M22x1.5	30	-	25	880
SSD-I-100	100	30	70	$28^{-0.1}_{-0.4}$	$20^{+0.084}_{0}$	46	41	M26x1.5	30	-	25	840
SSD-I-125	125/140	50	85	$32^{-0.1}_{-0.4}$	$25^{+0.084}_{0}$	55	55	M30x1.5	32	27.5	-	1250
SSD-I-160	160	60	105	$40^{-0.1}_{-0.4}$	$32^{+0.100}_{0}$	70	70	M36x1.5	40	35	-	2550

● Rod eye (I2)

· ø12 to ø25

Material: Steel
Zinc chromate treatment

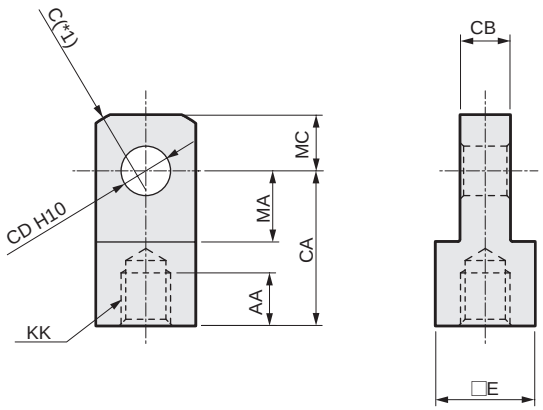

· ø32 to ø100

Material: Cast iron
ø32 Zinc chromate treatment
ø40 to ø100 Coating

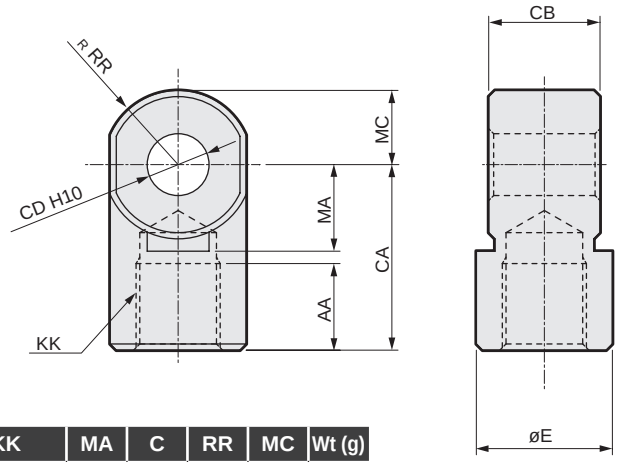

*1: ø20/25 are SR RR

Model No.	Bore size	AA	CA	CB	CD	E	KK	MA	C	RR	MC	Wt (g)
SSD-I2-12	ø12	6	16	$5^{-0.2}_{-0.4}$	$5^{+0.048}_{0}$	□10	M5x0.8	7	2	-	5.5	9
SSD-I2-16	ø16	8	25	$6.5^{-0.2}_{-0.4}$	$5^{+0.048}_{0}$	□12	M6x1	14	2	-	7	21
SSD-I2-20	ø20	8.5	25	$8^{-0.2}_{-0.4}$	$8^{+0.058}_{0}$	□16	M8x1.25	11.5	-	13.4	9	38
SSD-I2-25	ø25	10.5	30	$10^{-0.2}_{-0.4}$	$10^{+0.058}_{0}$	□20	M10x1.25	14	-	17.1	11	71
SSD-I2-32	ø32/ø40	14	30	$18^{-0.3}_{-0.5}$	$10^{+0.058}_{0}$	ø22	M14x1.5	14	-	12	12	74
SSD-I2-50	ø50/ø63	18	40	$22^{-0.3}_{-0.5}$	$14^{+0.070}_{0}$	ø28	M18x1.5	20	-	16	16	155
SSD-I2-80	ø80	21	50	$28^{-0.3}_{-0.5}$	$18^{+0.070}_{0}$	ø38	M22x1.5	27	-	21	21	380
SSD-I2-100	ø100	21	55	$32^{-0.3}_{-0.5}$	$22^{+0.084}_{0}$	ø44	M26x1.5	31	-	24	24	550

SCP*3
CMK2
CMA2
SCM
SCG
SCA2
SCS2
CKV2
CAV2/COVP/N2
SSD2
SSG
SSD
CAT
MDC2
MVC
SMG
MSD/MSDG
FC*
STK
SRL3
SRG3
SRM3
SRT3
MRL2
MRG2
SM-25
ShkAbs
FJ
FK
Spd Contr
Ending

Dimensions (Accessory: Y, Y2)

CAD

● Rod clevis (Y)

· ø12, ø16, ø40, ø50, ø63, ø80, ø100, ø125, ø140, ø160

· ø20, ø25 Material: ø12 to ø32 Steel
ø40 to ø100 Cast iron
ø12 to ø25
Zinc chromate treatment
ø32 to ø100 Coating

* A pin and a snap ring are included.
* AB is thread depth

· ø32

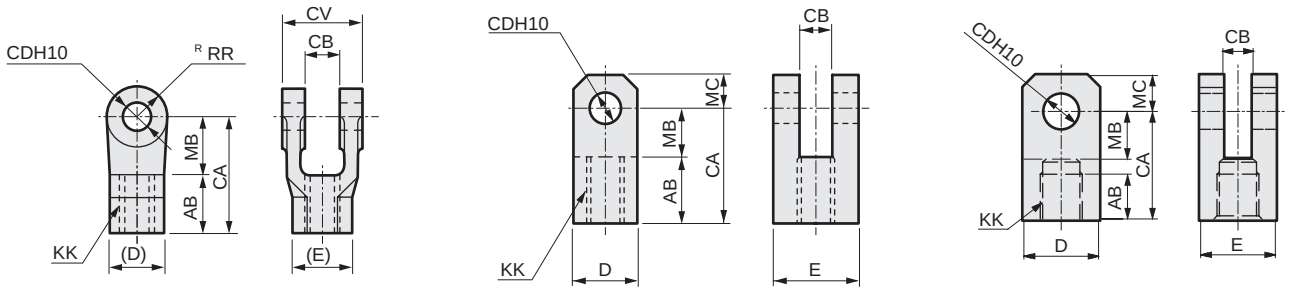

Model No.	Applicable bore size (mm)	AB	CA	CB	CD	CV	D	E	KK	MB	MC	RR	Weight (g)
P2-Y-16	12	11	21	$6.5^{+0.2}_{+0.1}$	$5^{+0.048}_{0}$	12	12	12	M5	10	-	10	20
SSD-Y-16	16	11	21	$6.5^{+0.2}_{+0.1}$	$5^{+0.048}_{0}$	12	12	12	M6	10	-	10	20
SSD-Y-20	20	17	30	$8^{+0.3}_{+0.1}$	$10^{+0.058}_{0}$	19	19	19	M8	13	10	-	100
M1-Y-30	25	20	36	$10^{+0.3}_{+0.1}$	$12^{+0.070}_{0}$	25	25	25	M10x1.25	16	12	-	197
SSD-Y-32	32	15	36	$10^{+0.3}_{+0.1}$	$12^{+0.070}_{0}$	25	25	25	M14x1.5	16	12	-	197
SSD-Y-40	40	24	50	$18^{+0.4}_{+0.1}$	$12^{+0.070}_{0}$	36	(27)	(31.2)	M14x1.5	26	-	16	250
SSD-Y-50	50	24	50	$18^{+0.4}_{+0.1}$	$12^{+0.070}_{0}$	36	(27)	(31.2)	M18x1.5	26	-	16	240
SSD-Y-63	63	24	50	$20^{+0.4}_{+0.1}$	$14^{+0.070}_{0}$	40	(27)	(31.2)	M18x1.5	26	-	16	260
SSD-Y-80	80	35	70	$28^{+0.4}_{+0.1}$	$20^{+0.084}_{0}$	56	(41)	(47.3)	M22x1.5	35	-	25	900
SSD-Y-100	100	35	70	$28^{+0.4}_{+0.1}$	$20^{+0.084}_{0}$	56	(41)	(47.3)	M26x1.5	35	-	25	850
SSD-Y-125	125/140	50	85	$32^{+0.4}_{+0.1}$	$25^{+0.084}_{0}$	64	(46)	(53.1)	M30x1.5	35	-	27.5	1300
SSD-Y-160	160	60	105	$40^{+0.4}_{+0.1}$	$32^{+0.100}_{0}$	80	(55)	(63.5)	M36x1.5	45	-	35	2550

● Rod clevis (Y2)

· ø12 to ø25

· ø32 to ø100 Material: ø12 to ø32 Steel
ø40 to ø100 Cast iron
ø12 to ø25
Zinc chromate treatment
ø32 to ø100 Coating

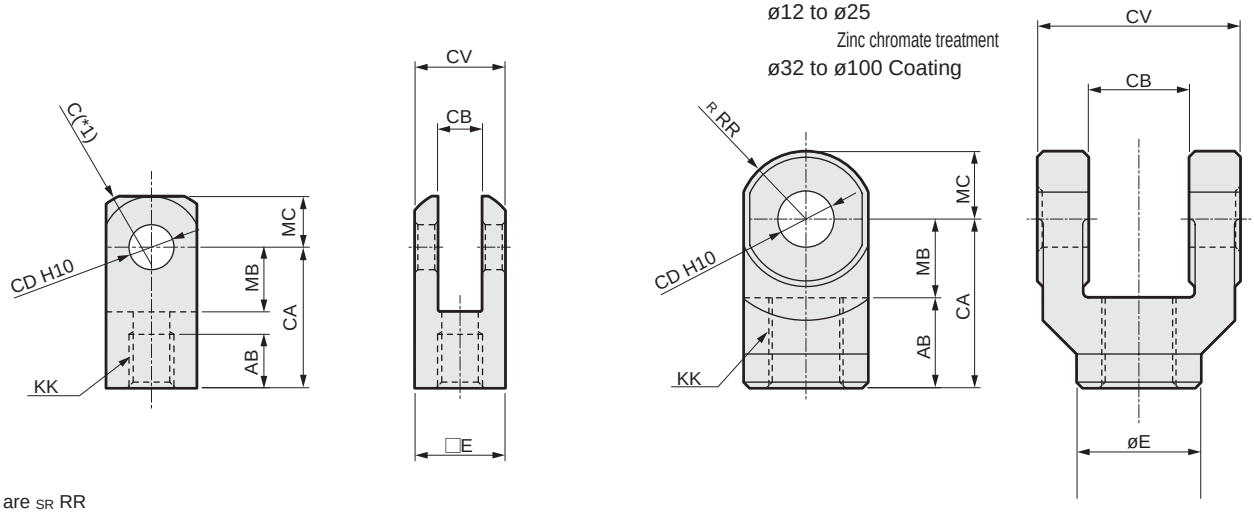

*1: ø20/25 are SR RR
*2: A pin and a snap ring are included.

Model No.	Bore size	AB	CA	CB	CD	CV	E	KK	MB	C	RR	MC	Wt (g)
SSD-Y2-12	ø12	6	16	$5^{+0.4}_{+0.2}$	$5^{+0.048}_{0}$	10	□10	M5x0.8	7	2	-	5.5	12
SSD-Y2-16	ø16	11	21	$6.5^{+0.4}_{+0.2}$	$5^{+0.048}_{0}$	12	□12	M6x1	10	2	-	7	20
SSD-Y2-20	ø20	13.5	25	$8^{+0.4}_{+0.2}$	$8^{+0.058}_{0}$	16	□16	M8x1.25	11.5	-	13.4	9	45
SSD-Y2-25	ø25	16	30	$10^{+0.4}_{+0.2}$	$10^{+0.058}_{0}$	20	□20	M10x1.25	14	-	17.1	11	84
SSD-Y2-32	ø32/ø40	16	30	$18^{+0.5}_{+0.3}$	$10^{+0.058}_{0}$	36	ø22	M14x1.5	14	-	12	12	120
SSD-Y2-50	ø50/ø63	20	40	$22^{+0.5}_{+0.3}$	$14^{+0.070}_{0}$	44	ø28	M18x1.5	20	-	16	16	257
SSD-Y2-80	ø80	23	50	$28^{+0.5}_{+0.3}$	$18^{+0.070}_{0}$	56	ø38	M22x1.5	27	-	21	21	589
SSD-Y2-100	ø100	24	55	$32^{+0.5}_{+0.3}$	$22^{+0.084}_{0}$	64	ø44	M26x1.5	31	-	24	24	933

Dimensions (Accessory: P, P2)

● Rod clevis (Y) pin (P)

· ø12, ø16, ø40 to ø160

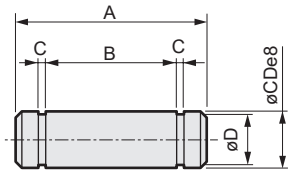

· ø20 to ø32

Material: Steel
Zinc chromate treatment

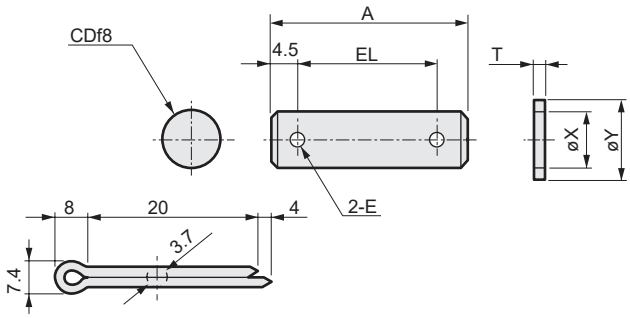

Model No.	Applicable bore size (mm)	A	B	C	D	CD	E	EL	T	X	Y	Applicable snap ring pin	Wt (g)
P2-P-16	12/16	18	13	0.7	4	$5^{-0.010}_{-0.028}$	-	-	-	-	-	E type snap ring 4	3.0
M1-P-20	20	37	-	-	-	$10^{-0.013}_{-0.035}$	4	28	1.6	10.5	18	Split pin	29
M1-P-30	25/32	46	-	-	-	$12^{-0.018}_{-0.043}$	4	37	2.5	12.5	22	Split pin	50
S1-P-40	40/50	43.5	36.2	1.15	11.5	$12^{-0.032}_{-0.059}$	-	-	-	-	-	C type for shaft 12	40
S1-P-63	63	47.5	40.2	1.15	13.4	$14^{-0.032}_{-0.059}$	-	-	-	-	-	C type for shaft 14	60
S1-P-80	80/100	64	56.2	1.35	19	$20^{-0.040}_{-0.073}$	-	-	-	-	-	C type for shaft 20	160
SCS2-125-P	125/140	75	66.3	1.35	23.9	$25^{-0.040}_{-0.073}$	-	-	-	-	-	C type for shaft 25	250
SCS2-160-P	160	92	82.7	1.65	30.3	$32^{-0.050}_{-0.089}$	-	-	-	-	-	C type for shaft 32	500

● The pins for the rod clevis (Y2) are common with the pins (P2) for the clevis brackets (CB2). Refer to page 1112 for dimensions.

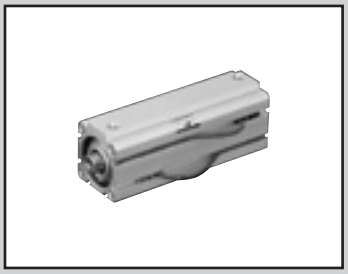

Compact cylinder double acting/single rod/high load

SSD-K Series

● Bore size: ø12/ø16/ø20/ø25/ø32/ø40/ø50/ø63/ø80/ø100

JIS symbol

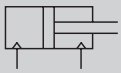

RoHS CAD

Specifications

Item	SSD-K SSD-KL (with switch)									
Bore size mm	ø12	ø16	ø20	ø25	ø32	ø40	ø50	ø63	ø80	ø100
Actuation	Double acting									
Working fluid	Compressed air									
Max. working pressure MPa	1.0 (≈150 psi, 10 bar)									
Min. working pressure MPa	0.1 (≈15 psi, 1 bar)							0.05 (≈7.3 psi, 0.5 bar)		
Proof pressure MPa	1.6 (≈230 psi, 16 bar)									
Ambient temperature °C	-10 (14°F) to 60 (140°F) (no freezing)									
Port size	M5				Rc 1/8		Rc 1/4		Rc 3/8	
Stroke tolerance mm	+2.0 0									
Working piston speed mm/s	50 to 500							50 to 300		
Cushion	Rubber cushion									
Lubrication	Not required (use turbine oil ISO VG32 if necessary for lubrication)									
Allowable absorbed energy J	0.04	0.09	0.16	0.16	0.40	0.63	0.98	1.56	2.51	3.92

Stroke

Bore size (mm)	Standard stroke (mm)	Max. stroke (mm)	Min. stroke (mm)
ø12	5, 10, 15, 20, 25, 30, 40, 50	*2) 100	1
ø16			
ø20		*2) 200	
ø25	10, 15, 20, 25, 30, 40 50, 60, 70, 80, 90, 100	*2) 300	
ø32			
ø40			
ø50			
ø63	10, 20, 30, 40, 50 60, 70, 80, 90, 100		
ø80			
ø100			

*1) The custom stroke is available in 1 mm increments. However, the total length is the same as that of the next longer standard stroke.
*2) Stroke over standard to maximum is available in increments of 10.
(Example) ø16: 60, 70, 80, 90, 100
*3) From 101 to 200 for ø20, 151 to 300 for ø25 to ø50, or 201 to 300 for ø63 to ø100, internal structure and total length are different in some products.
*4) For the type with switch, refer to the table on the following page of installed switch numbers and minimum stroke.
*5) Refer to pages 1320 and 1321 for the min. stroke with mounting brackets LB and LB2.

Clean-room specifications (Catalog No. CB-033SA)

● Anti-dust generation structure for use in cleanrooms

SSD-K..... P7*

SSD-K..... P5*

Oil-prohibited specifications (Ending Page 132)

● Grease splash prevented

SSD-K..... P12

Specifications for rechargeable battery (catalog No. CC-1226A)

● Design compatible with rechargeable battery manufacturing process

SSD-K..... P4*

Custom stroke

● SSD-K Series

Item	Standard products		Optional products	
	Standard stroke body with spacer		Dedicated unit (-S)	
Model No.	Refer to How to order.		Add "-S" option code to the model No.	
Description	A spacer is added to the standard stroke body to adjust the stroke in 1 mm increments.		Dedicated units of the required stroke are available.	
Stroke range	Bore size	Stroke range	Bore size	Stroke range
	12 to 20	1 to 49	12/16	6 (11) to 100 (*1)
			20	6 to 200
	25 to 100	1 to 99	25 to 100	11 to 300
Example of model No.	Model No.: SSD-K-32-81 A +9 mm spacer is added to the SSD-K-32-90 standard cylinder to create 90 mm stroke. B dimension is 123mm.		Model No.: SSD-K-32-81-S Dedicated units for 81 mm stroke are available. B dimension is 114mm.	

*1) The value in ( ) is for type with switch.

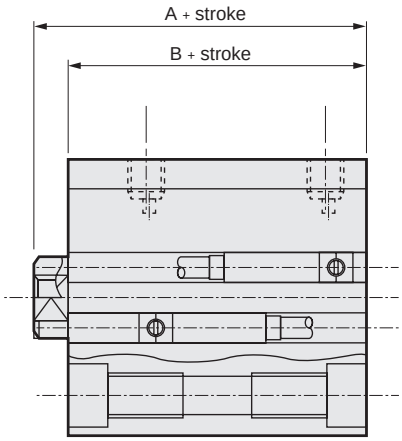

Number of installed switches and min. stroke (mm)

Switch quantity	1	2	3	4	5
Switch model No. / Bore size (mm)	T*	T*	T*	T*	T*
ø12	5	5	25	-	-
ø16	5	5	25	-	-
ø20	5	5	35	50	65
ø25	5	5	35	50	65
ø32	5	5	35	50	65
ø40	5	5	35	50	65
ø50	5	5	35	50	65
ø63	5	5	35	50	65
ø80	5	5	35	50	65
ø100	5	5	35	50	65

Note: Less than 10 mm with the 2-color LED, off-delay, AC magnetic field proof, T1* or T8* switch is not available.

Switch specifications

● 1-color/2-color LED/for AC magnetic field proof

Item	2-wire proximity				3-wire proximity				2-wire reed							2-wire proximity
	T1H/ T1V	T2H/T2V/ T2JH/T2JV	T2YH/ T2YV	T2WH/ T2WV	T3H/ T3V	T3PH/ T3PV	T3YH/ T3YV	T3WH/ T3WV	T0H/T0V	T5H/T5V		T8H/T8V				T2YD (*4) T2YDT
Applications	For programmable controller, relay, compact solenoid valve	Dedicated for programmable controller			For programmable controller, relay				For programmable controller, relay	For programmable controller, relay (no lamp), serial		For programmable controller, relay				Dedicated for programmable controller
Output method	-				NPN output	PNP output	NPN output	NPN output	-							
Pwr. supp. V.	-				10 to 28 VDC				-							
Load voltage	85 to 265 VAC	10 to 30 VDC		24 VDC ±10%	30 VDC or less				12/24 VDC	100/110 VAC	5/12/24 VDC	100/110 VAC	12/24 VDC	110 VAC	220 VAC	24 VDC ±10%
Load current	5 to 100 mA	5 to 20 mA (*3)			100 mA or less		50 mA or less		5 to 50 mA	7 to 20 mA	50 mA or less	20 mA or less	5 to 50 mA	7 to 20 mA	7 to 10 mA	5 to 20 mA
Indicator	LED (Lit when ON)	LED (Lit when ON)	Red/green LED (Lit when ON)	Red/green LED (Lit when ON)	LED (Lit when ON)	Yellow LED (Lit when ON)	Red/green LED (Lit when ON)	Red/green LED (Lit when ON)	LED (Lit when ON)	No indicator lamp		LED (Lit when ON)				Red/green LED (Lit when ON)
Leakage current	≤ 1 mA at 100 VAC, ≤ 2 mA at 200 VAC	1 mA or less			10 μA or less				0 mA							1 mA or less
Weight g	1 m:33 3 m:87 5 m:142	1 m:18 3 m:49 5 m:80	1 m:33 3 m:87 5 m:142	1 m:18 3 m:49 5 m:80	1 m:18 3 m:49 5 m:80		1 m:33 3 m:87 5 m:142	1 m:18 3 m:49 5 m:80	1 m:18 3 m:49 5 m:80			1 m:33 3 m:87 5 m:142				1 m:61 3 m:166 5 m:272

*1 : Refer to Ending Page 1 for detailed switch specifications and dimensions.
*2 : Switches other than the above models, such as switches with connectors, are also available. Refer to Ending Page 1.
*3 : The max. load current is 20 mA at 25°C. The current is lower than 20 mA if the operating ambient temperature around the switch is higher than 25˚C. (5 to 10 mA at 60°C)
*4 : Switch for AC magnetic field (T2YD/T2YDT) cannot be used in DC magnetic field.

Theoretical thrust table

(Unit: N)

Bore size (mm)	Operating direction	Working pressure MPa											
		0.05	0.1	0.15	0.2	0.3	0.4	0.5	0.6	0.7	0.8	0.9	1.0
ø12	Push	-	11.3	17.0	22.6	33.9	45.2	56.5	67.9	79.2	90.5	$1.02x10^2$	$1.13x10^2$
	Pull	-	8.48	12.7	17.0	25.4	33.9	42.4	50.9	59.4	67.9	76.3	84.8
ø16	Push	-	20.1	30.2	40.2	60.3	80.4	$1.01x10^2$	$1.21x10^2$	$1.41x10^2$	$1.61x10^2$	$1.81x10^2$	$2.01x10^2$
	Pull	-	15.1	22.6	30.2	45.2	60.3	75.4	90.5	$1.06x10^2$	$1.21x10^2$	$1.36x10^2$	$1.51x10^2$
ø20	Push	-	31.4	47.1	62.8	94.2	$1.26x10^2$	$1.57x10^2$	$1.88x10^2$	$2.20x10^2$	$2.51x10^2$	$2.83x10^2$	$3.14x10^2$
	Pull	-	23.6	35.3	47.1	70.7	94.2	$1.18x10^2$	$1.41x10^2$	$1.65x10^2$	$1.88x10^2$	$2.12x10^2$	$2.36x10^2$
ø25	Push	-	49.1	73.6	98.2	$1.47x10^2$	$1.96x10^2$	$2.45x10^2$	$2.95x10^2$	$3.44x10^2$	$3.93x10^2$	$4.42x10^2$	$4.91x10^2$
	Pull	-	37.8	56.7	75.6	$1.13x10^2$	$1.51x10^2$	$1.89x10^2$	$2.27x10^2$	$2.64x10^2$	$3.02x10^2$	$3.40x10^2$	$3.78x10^2$
ø32	Push	-	80.4	$1.21x10^2$	$1.61x10^2$	$2.41x10^2$	$3.22x10^2$	$4.02x10^2$	$4.83x10^2$	$5.63x10^2$	$6.43x10^2$	$7.24x10^2$	$8.04x10^2$
	Pull	-	60.3	90.5	$1.21x10^2$	$1.81x10^2$	$2.41x10^2$	$3.02x10^2$	$3.62x10^2$	$4.22x10^2$	$4.83x10^2$	$5.43x10^2$	$6.03x10^2$
ø40	Push	-	$1.26x10^2$	$1.88x10^2$	$2.51x10^2$	$3.77x10^2$	$5.03x10^2$	$6.28x10^2$	$7.54x10^2$	$8.80x10^2$	$1.01x10^3$	$1.13x10^3$	$1.26x10^3$
	Pull	-	$1.06x10^2$	$1.58x10^2$	$2.11x10^2$	$3.17x10^2$	$4.22x10^2$	$5.28x10^2$	$6.33x10^2$	$7.39x10^2$	$8.44x10^2$	$9.50x10^2$	$1.06x10^3$
ø50	Push	-	$1.96x10^2$	$2.95x10^2$	$3.93x10^2$	$5.89x10^2$	$7.85x10^2$	$9.82x10^2$	$1.18x10^3$	$1.37x10^3$	$1.57x10^3$	$1.77x10^3$	$1.96x10^3$
	Pull	-	$1.65x10^2$	$2.47x10^2$	$3.30x10^2$	$4.95x10^2$	$6.60x10^2$	$8.25x10^2$	$9.90x10^2$	$1.15x10^3$	$1.32x10^3$	$1.48x10^3$	$1.65x10^3$
ø63	Push	$1.56x10^2$	$3.12x10^2$	$4.68x10^2$	$6.23x10^2$	$9.35x10^2$	$1.25x10^3$	$1.56x10^3$	$1.87x10^3$	$2.18x10^3$	$2.49x10^3$	$2.81x10^3$	$3.12x10^3$
	Pull	$1.40x10^2$	$2.80x10^2$	$4.20x10^2$	$5.61x10^2$	$8.41x10^2$	$1.12x10^3$	$1.40x10^3$	$1.68x10^3$	$1.96x10^3$	$2.24x10^3$	$2.52x10^3$	$2.80x10^3$
ø80	Push	$2.51x10^2$	$5.03x10^2$	$7.54x10^2$	$1.01x10^3$	$1.51x10^3$	$2.01x10^3$	$2.51x10^3$	$3.02x10^3$	$3.52x10^3$	$4.02x10^3$	$4.52x10^3$	$5.03x10^3$
	Pull	$2.27x10^2$	$4.54x10^2$	$6.80x10^2$	$9.07x10^2$	$1.36x10^3$	$1.81x10^3$	$2.27x10^3$	$2.72x10^3$	$3.17x10^3$	$3.63x10^3$	$4.08x10^3$	$4.54x10^3$
ø100	Push	$3.93x10^2$	$7.85x10^2$	$1.18x10^3$	$1.57x10^3$	$2.36x10^3$	$3.14x10^3$	$3.93x10^3$	$4.71x10^3$	$5.50x10^3$	$6.28x10^3$	$7.07x10^3$	$7.85x10^3$
	Pull	$3.57x10^2$	$7.15x10^2$	$1.07x10^3$	$1.43x10^3$	$2.14x10^3$	$2.86x10^3$	$3.57x10^3$	$4.29x10^3$	$5.00x10^3$	$5.72x10^3$	$6.43x10^3$	$7.15x10^3$

How to order

No switch (without magnet for switch)

SSD-K - 12 ( ) - 5 ———— N - LB - I

With switch (built-in magnet for switch)

SSD-KL - 12 ( ) - 5 - T0H - R - N - LB - I

Ⓐ Bore size

Ⓑ Port thread

Ⓒ Stroke

Ⓓ Switch model No. *1 *2 *9

Ⓔ Switch quantity

Ⓕ Option *3

Ⓖ Mounting bracket *4 *5

Ⓗ Accessory *6

Code	Description
Ⓐ Bore size (mm)	
12	ø12
16	ø16
20	ø20
25	ø25
32	ø32
40	ø40
50	ø50
63	ø63
80	ø80
100	ø100

Ⓑ Port thread	
Blank	Rc thread
NN	NPT thread (ø32 and over) (made-to-order product)
GN	G thread (ø32 and over) (made-to-order product)

Ⓒ Stroke (mm)

Refer to the stroke table on the following page.

Ⓓ Switch model No.

Axial lead wire	Radial lead wire	Contact	Voltage AC	Voltage DC	Indicator	Lead wire
T0H*	**T0V***	Reed	●	●	1-color LED	2-wire
T5H*	**T5V***	Reed	●	●	No indicator lamp	2-wire
T8H*	**T8V***	Reed	●	●	1-color LED	2-wire
T1H*	**T1V***	Proximity	●		1-color LED	2-wire
T2H*	**T2V***	Proximity		●	1-color LED	2-wire
T3H*	**T3V***	Proximity		●	1-color LED	3-wire
T3PH*	**T3PV***	Proximity		●	1-color LED	3-wire
T2WH*	**T2WV***	Proximity		●	2-color LED	2-wire
T2YH*	**T2YV***	Proximity		●	2-color LED	2-wire
T3WH*	**T3WV***	Proximity		●	2-color LED	3-wire
T3YH*	**T3YV***	Proximity		●	2-color LED	3-wire
T2JH*	**T2JV***	Proximity		●	1-color LED off-delay	2-wire
T2YD*	**-**	Proximity		●	2-color LED AC magnetic field	2-wire
T2YDT*	**-**	Proximity		●	2-color LED AC magnetic field	2-wire
T2HR3	**T2VR3**	Proximity		●	1-color LED (bend resist lead wire specs)	2-wire

*** Lead wire length**	
Blank	1 m (standard)
3	3 m (option)
5	5 m (option)

Ⓔ Switch quantity	
R	1 on rod side
H	1 on head side
D	2

Ⓕ Option	
Bore size (ø)	
Blank	Rod end female thread
N	Rod end male thread
S	Dedicated unit for custom stroke
M	Piston rod material (stainless steel)
P6	Copper and PTFE free (for ø12, ø16, copper and PTFE free is provided as standard)

Ⓖ Mounting bracket	
LB	Axial foot
LB2	Axial foot (compact)
CB	Clevis bracket (pin and snap ring included)
CB2	Clevis bracket (compact) (pin and snap ring included)
FA	Rod side flange
FB	Head side flange

Ⓗ Accessory (available when rod end male thread "N" is selected)	
I	Rod eye
I2	Rod eye (compact)
Y	Rod clevis (pin and snap ring included)
Y2	Rod clevis (compact) (pin and snap ring included)

Precautions for model No. selection

*1 : Switches other than Ⓓ Switch model No. are also available. (Made to order) Refer to Ending Page 1 for details.
2 : AC magnetic field proof switch and T8 switch cannot be installed on ø12 and ø16.
*3 : Piston rod of ø12 to ø25 is stainless steel as standard. C-snap ring is stainless steel instead of steel. The rod end male thread nut is stainless steel.
*4 : The mounting bracket is included at shipment.
*5 : The projection dimension of piston rod WF when LB2 or FA is selected is different from that of the standard. Refer to the dimensions on pages 1109 and 1110. The number of the specified protruding dimension will be added at the end of the model No. printed on the metal plate on the body.
*6 : "I" and "Y" cannot be selected together.
*7 : Refer to Ending Page 85 for custom specifications of rod end form.
*8 : Refer to pages 1088 and 1089 for combinations of variations/options.
*9 : Switches are shipped with the product. Contact CKD if assembling before shipment is necessary.

[Example of model No.]

SSD-KL-12-5-T0H-R-N

Model: Compact cylinder High load

Ⓐ Bore size : ø12 mm
Ⓑ Port thread : Rc thread
Ⓒ Stroke : 5 mm
Ⓓ Switch model No. : Reed T0H switch
· Lead wire 1 m
Ⓔ Switch quantity : 1 on rod side
Ⓕ Option : Rod end male thread

[Stroke table]

Stroke (mm)		Applicable bore size									
		ø12	ø16	ø20	ø25	ø32	ø40	ø50	ø63	ø80	ø100
Standard stroke	5	●	●	●							
	10	●	●	●	●	●	●	●	●	●	●
	15	●	●	●	●	●	●	●			
	20	●	●	●	●	●	●	●	●	●	●
	25	●	●	●	●	●	●	●			
	30	●	●	●	●	●	●	●	●	●	●
	40	●	●	●	●	●	●	●	●	●	●
	50	●	●	●	●	●	●	●	●	●	●
	60				●	●	●	●	●	●	●
	70				●	●	●	●	●	●	●
	80				●	●	●	●	●	●	●
	90				●	●	●	●	●	●	●
	100				●	●	●	●	●	●	●
Min. stroke (mm) *1		1									
Max. stroke (mm)		100		200	300						
Custom stroke *2		In 1 mm increments									

1 : Less than 5 mm with 1-color LED switch and less than 10 mm with the 2-color LED, off-delay, AC magnetic field proof, T1 or T8* switch are not available. Refer to page 1117 for the number of installed switches and the min. stroke.
*2 : The total length is the same as that of the next longer standard stroke.
*3 : Refer to pages 1320 and 1321 for the min. stroke with mounting brackets LB and LB2.

How to order switch

SW - T0H

Switch model No.
(Item Ⓓ on page 1118)

Cylinder weight table (the weight of the switches is when there are 2 cylinder switches.)

(Unit: g)

Stroke (mm)	5		10		15		20		25		30		40		50		60		70		80		90		100	
Bore size (mm)	No switch	Switch	No switch	Switch	No switch	Switch	No switch	Switch	No switch	Switch	No switch	Switch	No switch	Switch	No switch	Switch	No switch	Switch	No switch	Switch	No switch	Switch	No switch	Switch	No switch	Switch
ø12	44	86	53	95	61	103	70	112	78	121	87	129	104	146	121	163	138	180	155	197	172	214	189	231	206	248
ø16	59	104	69	114	80	125	91	136	102	147	113	158	135	169	157	191	179	213	201	235	223	257	245	279	267	301
ø20	75	150	88	163	101	176	113	188	126	201	138	213	163	238	188	263	213	288	238	313	263	338	288	363	313	388
ø25	—	—	118	209	134	225	150	241	165	256	182	273	214	305	246	337	278	369	310	401	342	433	374	465	406	497
ø32	—	—	188	302	209	323	231	345	253	367	275	389	318	432	361	475	404	518	447	561	490	604	533	647	576	690
ø40	—	—	263	406	290	433	316	459	342	485	369	512	422	565	475	618	528	671	581	724	634	777	687	830	740	883
ø50	—	—	425	619	467	661	510	704	553	747	594	788	678	872	762	956	846	1040	930	1124	1014	1208	1098	1292	1182	1376
ø63	—	—	617	896	—	—	727	1006	—	—	838	1117	948	1227	1058	1337	1168	1447	1278	1557	1388	1667	1498	1777	1608	1887
ø80	—	—	1101	1514	—	—	1274	1687	—	—	1448	1861	1621	2034	1794	2207	1967	2380	2140	2553	2313	2726	2486	2899	2659	3072
ø100	—	—	1660	2227	—	—	1888	2455	—	—	2115	2682	2343	2910	2571	3138	2799	3366	3027	3594	3255	3822	3483	4050	3711	4278

Stroke (mm)	110		120		130		140		150		160		170		180		190		200	
Bore size (mm)	No switch	Switch	No switch	Switch	No switch	Switch	No switch	Switch	No switch	Switch	No switch	Switch	No switch	Switch	No switch	Switch	No switch	Switch	No switch	Switch
ø20	338	413	363	438	388	463	413	488	438	513	463	538	488	563	513	588	538	613	563	638
ø25	438	529	470	561	502	593	534	625	566	657	598	689	630	721	662	753	694	785	726	817
ø32	619	733	662	776	705	819	748	862	791	905	833	947	876	990	919	1033	962	1076	1005	1119
ø40	793	936	846	989	899	1042	952	1095	1005	1148	1058	1201	1111	1254	1164	1307	1217	1360	1270	1413
ø50	1266	1460	1350	1544	1434	1628	1518	1712	1602	1796	1700	1894	1785	1979	1870	2064	1955	2149	2040	2234
ø63	1718	1997	1828	2107	1938	2217	2048	2327	2158	2437	2268	2547	2378	2657	2488	2767	2598	2877	2708	2987
ø80	2832	3245	3005	3418	3178	3591	3351	3764	3524	3937	3697	4110	3870	4283	4043	4456	4216	4629	4389	4802
ø100	3939	4506	4167	4734	4395	4962	4623	5190	4851	5418	5079	5646	5307	5874	5535	6102	5763	6830	5991	6558

Stroke (mm)	210		220		230		240		250		260		270		280		290		300	
Bore size (mm)	No switch	Switch	No switch	Switch	No switch	Switch	No switch	Switch	No switch	Switch	No switch	Switch	No switch	Switch	No switch	Switch	No switch	Switch	No switch	Switch
ø25	769	849	801	881	833	913	865	945	897	977	929	1009	961	1041	993	1073	1025	1105	1057	1137
ø32	1048	1162	1091	1205	1134	1248	1177	1291	1220	1334	1263	1377	1306	1420	1349	1463	1392	1506	1435	1549
ø40	1323	1466	1376	1519	1429	1572	1482	1625	1535	1678	1588	1731	1641	1784	1694	1837	1747	1890	1800	1943
ø50	2125	2319	2210	2404	2295	2489	2380	2574	2465	2659	2550	2744	2635	2829	2720	2914	2805	2999	2890	3084
ø63	2817	3096	2927	3206	3037	3316	3147	3426	3257	3536	3367	3646	3477	3756	3587	3866	3697	3976	3807	4086
ø80	4561	4974	4734	5147	4907	5320	5080	5493	5253	5666	5426	5839	5599	6012	5772	6185	5945	6358	6118	6531
ø100	6220	6787	6448	7015	6676	7243	6904	7471	7132	7699	7360	7927	7588	8155	7816	8383	8044	8611	8272	8839

How to order mounting bracket

Bore size (mm) / Mounting bracket	ø12	ø16	ø20	ø25	ø32	ø40	ø50	ø63	ø80	ø100
Foot (LB)	SSD-LB-12	SSD-LB-16	SSD-LB-20	SSD-LB-25	SSD-LB-32	SSD-LB-40	SSD-LB-50	SSD-LB-63	SSD-LB-80	SSD-LB-100
Foot (LB2)	SSD-LB2-12	SSD-LB2-16	SSD-LB2-20	SSD-LB2-25	SSD-LB2-32	SSD-LB2-40	SSD-LB2-50	SSD-LB2-63	SSD-LB2-80	SSD-LB2-100
Flange (FA/FB)	SSD-FA-12	SSD-FA-16	SSD-FA-20	SSD-FA-25	SSD-FA-32	SSD-FA-40	SSD-FA-50	SSD-FA-63	SSD-FA-80	SSD-FA-100
Clevis bracket (CB)	SSD-CB-12	SSD-CB-16	SSD-CB-20	SSD-CB-25	SSD-CB-32	SSD-CB-40	SSD-CB-50	SSD-CB-63	SSD-CB-80	SSD-CB-100
Clevis bracket (CB2)	SSD-CB2-12	SSD-CB2-16	SSD-CB2-20	SSD-CB2-25	SSD-CB2-32	SSD-CB2-40	SSD-CB2-50	SSD-CB2-63	SSD-CB2-80	SSD-CB2-100

*1: The foot mounting bracket is provided as 2 pcs./set.

SCP*3
CMK2
CMA2
SCM
SCG
SCA2
SCS2
CKV2
CAV2/ COVP/N2
SSD2
SSG
SSD
CAT
MDC2
MVC
SMG
MSD/ MSDG
FC*
STK
SRL3
SRG3
SRM3
SRT3
MRL2
MRG2
SM-25
ShkAbs
FJ
FK
Spd Contr
Ending

Internal structure and parts list

● SSD-KL-12 to 25 (double acting/single rod high load/with switch)

ø20: Over 100 to 200 mm stroke
ø25: Over 150 to 300 mm stroke

● SSD-KL-32 (double acting/single rod high load/with switch)

ø32: Over 150 to 300 mm stroke

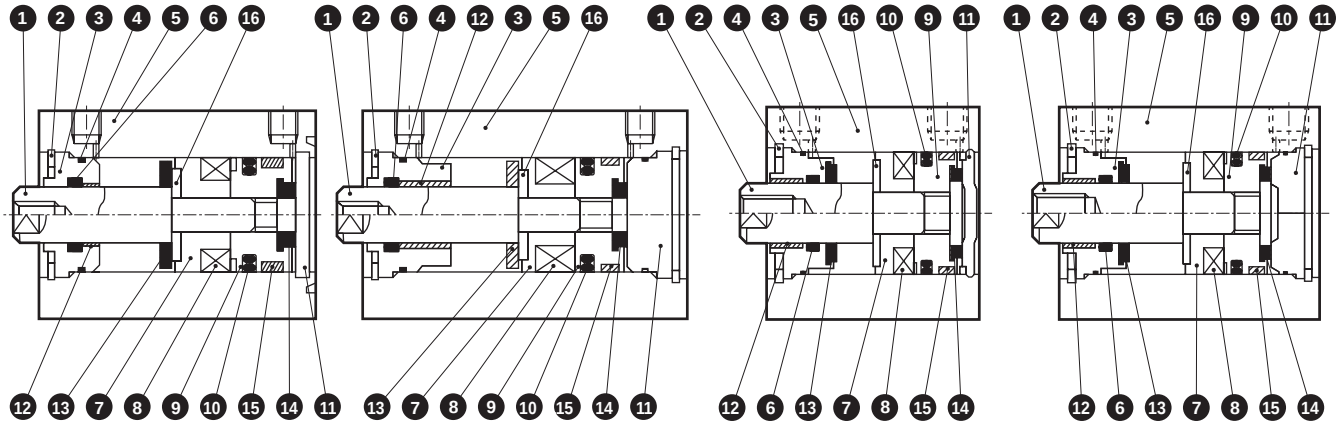

● SSD-K-12 to 25 (double acting/single rod high load)

ø20: Over 100 to 200 mm stroke
ø25: Over 150 to 300 mm stroke

● SSD-K-32 (double acting/single rod high load)

ø32: Over 150 to 300 mm stroke

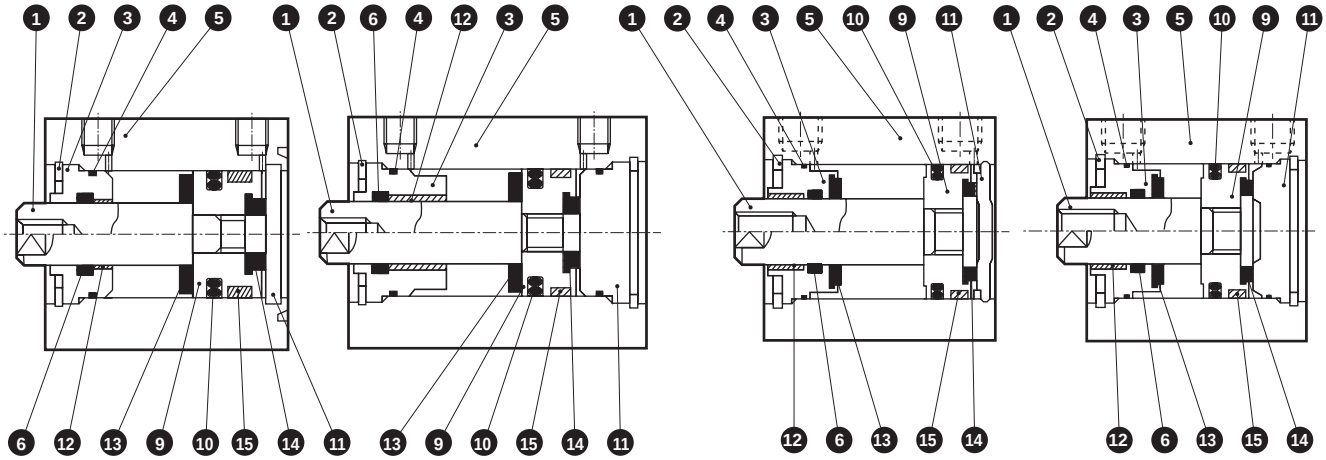

No.	Part name	Material	Remarks	No.	Part name	Material	Remarks
1	Piston rod	ø12 to ø25: Stainless steel ø32: Steel	ø16 to ø32 Industrial chrome plating	9	Piston	Aluminum alloy	Chromate
2	C-snap ring	Steel	Zinc phosphate	10	Piston packing	Nitrile rubber	
3	Rod metal	Special aluminum	Alumite (*3)	11	Cover	ø12 to ø25: Stainless steel ø32: Aluminum alloy	ø32: Alumite (*1)
4	Rod metal gasket	Nitrile rubber					
5	Body	Aluminum alloy	Hard alumite	12	Bush	Oiles drymet	ø20 to ø32 (*2)
6	Rod packing	Nitrile rubber		13	Cushion rubber R	Urethane rubber	
7	Spacer	ø12: Aluminum alloy ø16 to ø32: Special resin	ø12: Chromate	14	Cushion rubber H	Urethane rubber	
				15	Wear ring	Polyacetal resin	
8	Magnet	Plastic		16	Spacer washer	Stainless steel	ø20 to ø32

(*1) For cover for long stroke type (100 mm stroke and over for ø20, 150 mm stroke and over for ø25 and ø32), Material: Aluminum alloy, Remarks: Alumite treatment.
(*2) Material is steel for copper and PTFE free specifications.
(*3) Chromate-treated for ø32 only.

Repair parts list

Bore size (mm)	Kit No.	Repair parts No.
ø12	SSD-K-12K	4 6 10 13 14 15
ø16	SSD-K-16K	
ø20	SSD-K-20K	
ø25	SSD-K-25K	
ø32	SSD-K-32K	

Internal structure and parts list

● SSD-KL-40, 50 (double acting/single rod high load/with switch)
ø40, ø50: Over 150 to 300 mm stroke

● SSD-KL-63 to 100 (double acting/single rod high load/with switch)
ø63 to ø100: Over 200 to 300 mm stroke

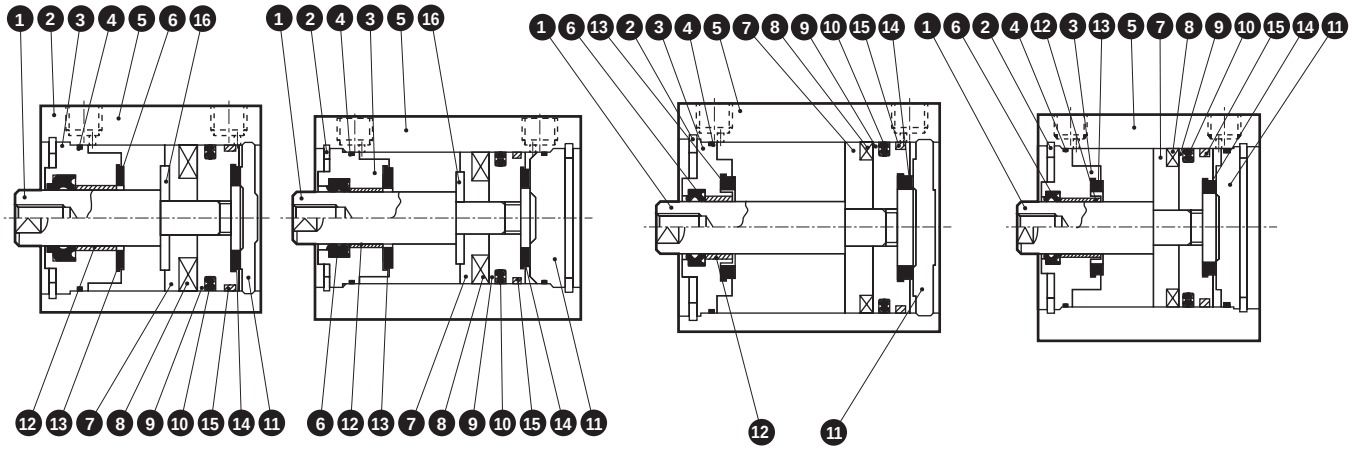

● SSD-K-40, 50 (double acting/single rod high load)
ø40, ø50: Over 150 to 300 mm stroke

● SSD-K-63 to 100 (double acting/single rod high load)
ø63 to ø100: Over 200 to 300 mm stroke

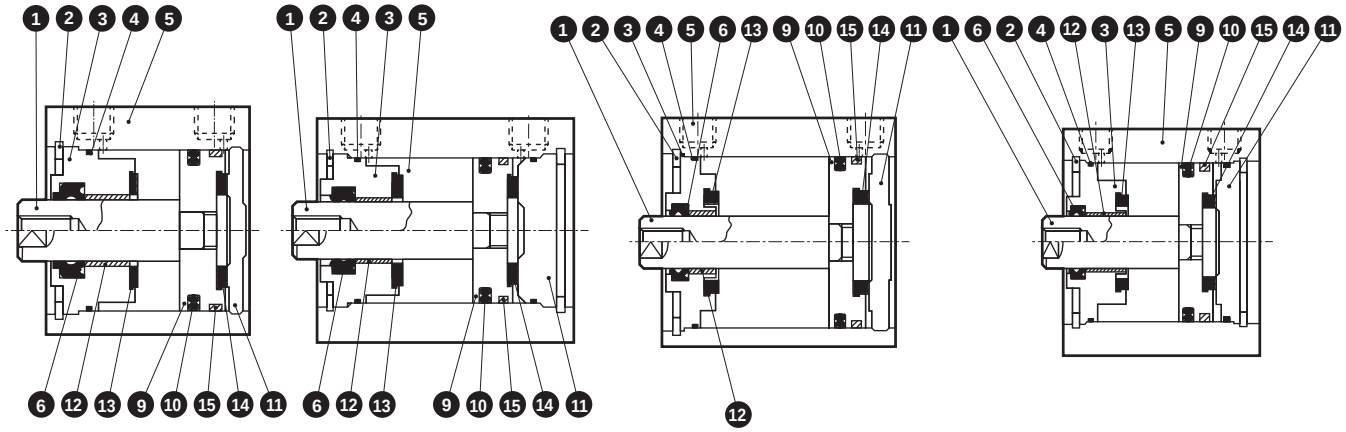

No.	Part name	Material	Remarks	No.	Part name	Material	Remarks
1	Piston rod	Steel	Industrial chrome plating	9	Piston	Aluminum alloy	Chromate
2	C-snap ring	Steel	Zinc phosphate	10	Piston packing	Nitrile rubber	
3	Rod metal	Aluminum alloy	Alumite (*2)	11	Cover	Aluminum alloy	Alumite
4	Rod metal gasket	Nitrile rubber		12	Bush	Oiles drymet	*1
5	Body	Aluminum alloy	Hard alumite	13	Cushion rubber R	Urethane rubber	
6	Rod packing	Nitrile rubber		14	Cushion rubber H	Urethane rubber	
7	Spacer	ø40, ø50: Special resin ø63 to ø100: Aluminum alloy	ø63 to ø100: Chromate	15	Wear ring	Polyacetal resin	
				16	Spacer washer	Stainless steel	ø40 to ø50
8	Magnet	Plastic					

(*1) Material is steel for copper and PTFE free specifications.
(*2) Chromate-treated for ø40 and ø50 only.

Repair parts list

Bore size (mm)	Kit No.	Repair parts No.
ø40	SSD-K-40K	4 6 10 13 14 15
ø50	SSD-K-50K	
ø63	SSD-K-63K	
ø80	SSD-K-80K	
ø100	SSD-K-100K	

Dimensions CAD

● SSD-KL-12 to 25 (with switch)

ø12/ø16

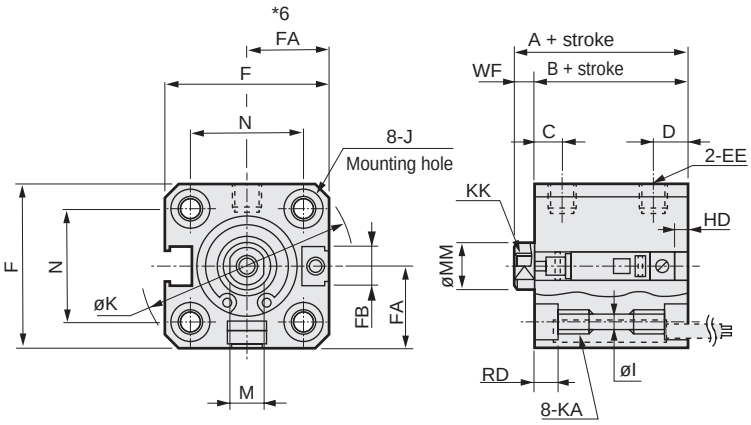

● Rod end male thread

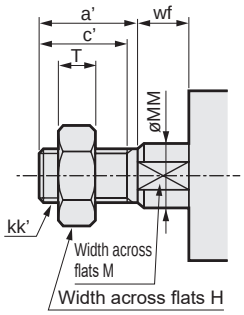

ø20/ø25

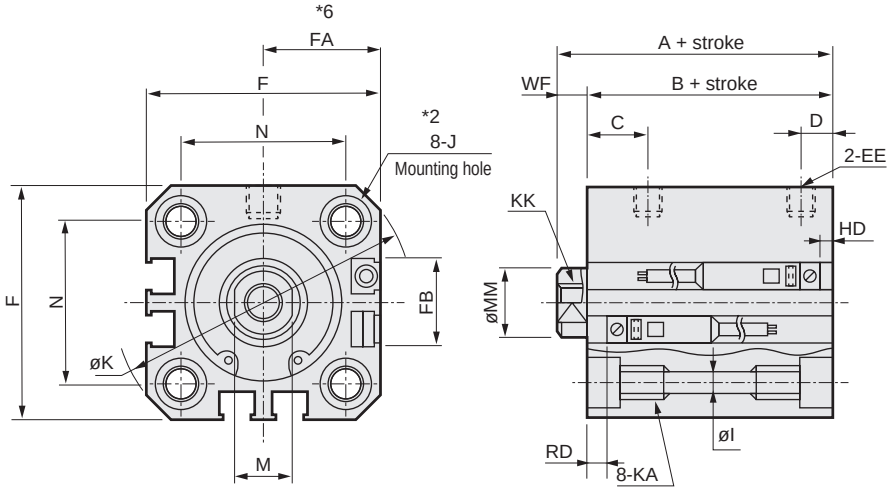

Code / Bore size (mm)	Common dimensions with switch																
	A *1	B *1	C	D *2	EE	F	FA *6	FB	I	J	K	KA	KK	M	MM	N	WF
ø12	30.5	27	5.5	5.5	M5	25	13(16.5)	4.5	3.5	6.5 spot face depth 3.5	32	M4 depth 7	M3 depth 6	5	6	15.5	3.5
ø16	30.5	27	5.5	5.5	M5	29	15(18.5)	4.5	3.5	6.5 spot face depth 3.5	38	M4 depth 7	M4 depth 8	6	8	20	3.5
ø20	39	34.5	8	5.5(8)	M5	36	18.5(22)	12.5	5.5	9 spot face depth 5.5	47	M6 depth 11	M5 depth 7	8	10	25.5	4.5
ø25	42.5	37.5	11	6(11)	M5	40	20.5(24)	13.5	5.5	9 spot face depth 5.5	51	M6 depth 11	M6 depth 12	10	12	28	5

Switch dimensions / Bore size (mm)	Reed T0H/T0V, T5H/T5V		Proximity T2H/T2V, T3H/T3V T2WH/T2WV, T3WH/T3WV	
	HD *2	RD *2	HD *2	RD *2
ø12	2.5	4.5	2.5	4.5
ø16	3	4	3	4
ø20	6(125)	8.5(13.5)	6(12.5)	8.5(13.5)
ø25	5.5(14)	12(17)	5.5(14)	12(17)

Table 1

Bore size	With switch	
	A *2	B *2
ø20	50.5	46
ø25	56	51

Table 2

Bore size	A + stroke	B + stroke
ø12	40.5	37
ø16	40.5	37

● *1 : To calculate A + stroke or B + stroke when using custom stroke, apply the next longer standard stroke (instead of the custom stroke) to the stroke value. (Example) If the custom stroke is 7 mm, apply the standard stroke of 10 mm.

● *2 : When longer than 100 mm stroke for ø20 or longer than 150 mm stroke for ø25, A and B dimensions are indicated in Table 1 and there is no spot face J. HD, RD and D dimensions are indicated in ( ).

● *3 : HD and RD dimensions for 5 mm stroke differ from these dimensions according to the setting.

● *4 : When the stroke is 5 mm for ø12 and ø16 with switch, (A + stroke) length and (B + stroke) length are as shown in Table 2.

● *5 : Refer to page 1314 for HD, RD and protruding dimensions of the 2-color LED, off-delay, AC magnetic field proof, T1* and T8* switches.

● *6 : Dimensions in ( ) of FA are for the L-shaped lead wire.

● *7 : Refer to pages 1320 to 1325 for dimensions including the accessories and pages 1108 to 1115 for dimensions of individual accessories.

● Dimensions of rod end male thread part

Code / Bore size (mm)	a'	c'	H	kk'	M	MM	T	wf
ø 12	10.5	9	8	M5	5	6	3.2	3.5
ø 16	12	10	10	M6	6	8	3.6	3.5
ø 20	14	12	13	M8	8	10	5	4.5
ø 25	17.5	15	17	M10x1.25	10	12	6	5

Dimensions

● SSD-K-12 to 25 (without switch)

● Rod end male thread

ø12/ø16

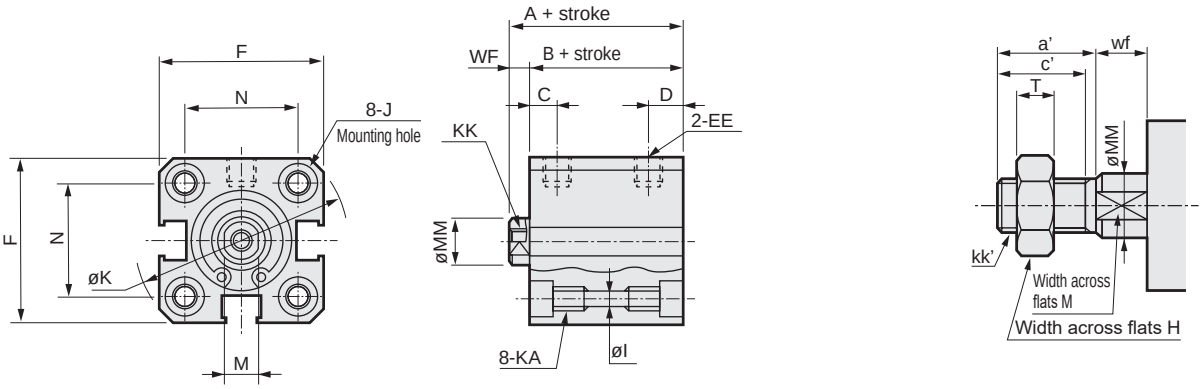

ø20/ø25

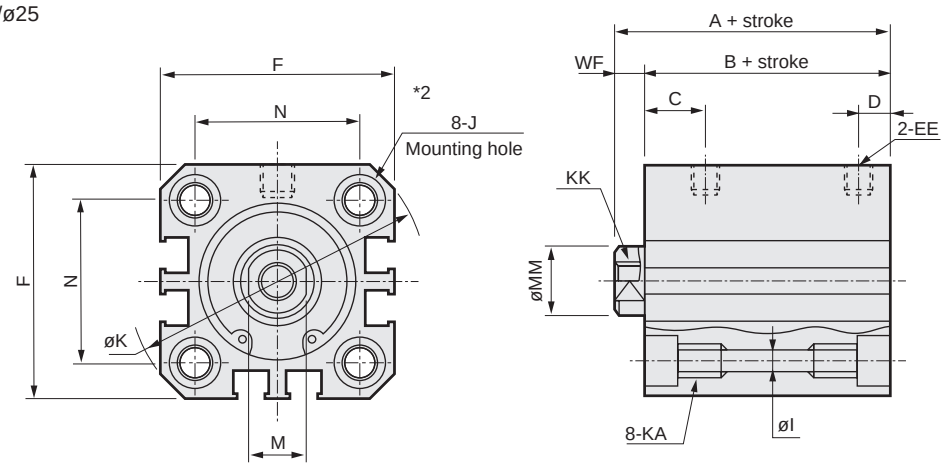

Code / Bore size (mm)	Dimensions without switch and common dimensions														
	A *1	B *1	C	D	EE	F	I	J	K	KA	KK	M	MM	N	WF
ø12	25.5	22	5.5	5.5	M5	25	3.5	6.5 spot face depth 3.5	32	M4 depth 7	M3 depth 6	5	6	15.5	3.5
ø16	25.5	22	5.5	5.5	M5	29	3.5	6.5 spot face depth 3.5	38	M4 depth 7	M4 depth 8	6	8	20	3.5
ø20	29	24.5	8	5.5	M5	36	5.5	9 spot face depth 5.5	47	M6 depth 11	M5 depth 7	8	10	25.5	4.5
ø25	32.5	27.5	11	6	M5	40	5.5	9 spot face depth 5.5	51	M6 depth 11	M6 depth 12	10	12	28	5

● *1 : To calculate A + stroke or B + stroke when using custom stroke, apply the next longer standard stroke (instead of the custom stroke) to the stroke value.
(Example) If the custom stroke is 7 mm, apply the standard stroke of 10 mm.

● *2 : When longer than 100 mm stroke for ø20 or longer than 150 mm stroke for ø25, A and B dimensions are indicated in Table 1 and there is no spot face J.

● *3 : Refer to pages 1320 to 1325 for dimensions including the accessories and pages 1108 to 1115 for dimensions of individual accessories.

Table 1

Bore size	A *2	B *2
ø20	40.5	36
ø25	46	41

● Dimensions of rod end male thread part

Code / Bore size (mm)	a'	c'	H	kk'	M	MM	T	wf
ø 12	10.5	9	8	M5	5	6	3.2	3.5
ø 16	12	10	10	M6	6	8	3.6	3.5
ø 20	14	12	13	M8	8	10	5	4.5
ø 25	17.5	15	17	M10x1.25	10	12	6	5

SCP*3
CMK2
CMA2
SCM
SCG
SCA2
SCS2
CKV2
CAV2/COVP/N2
SSD2
SSG
SSD
CAT
MDC2
MVC
SMG
MSD/MSDG
FC*
STK
SRL3
SRG3
SRM3
SRT3
MRL2
MRG2
SM-25
ShkAbs
FJ
FK
Spd Contr
Ending

Dimensions

● SSD-KL-32 to 100 (with switch)

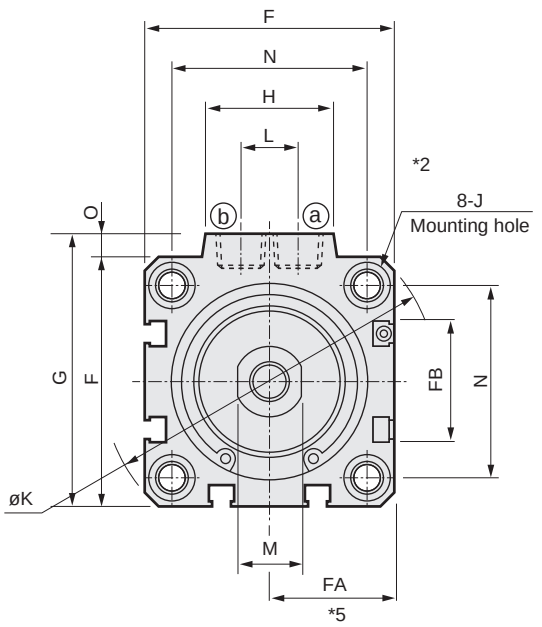

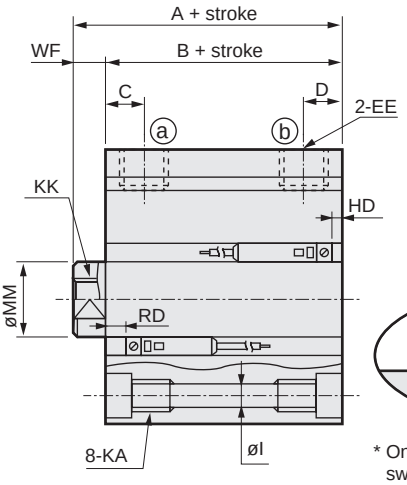

● Rod end male thread

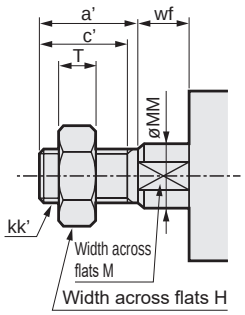

[Bore size ø100]

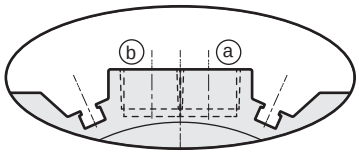

* Only for ø100, the port surface has switch grooves.

Code / Bore size (mm)	Common dimensions with switch																				
	A *1	B *1	C	D *2	EE	F	FA *5	FB	G	H	I	J	K	KA	KK	L	M	MM	N	O	WF
ø32	50	43	8	8(8)	Rc 1/8	45	23(26.5)	20.5	49.5	24	5.5	9 spot face depth 5.5	60	M6 depth 11	M8 depth 13	10	14	16	34	4.5	7
ø40	56.5	49.5	12	8.5(12)	Rc 1/8	52	26.5(30)	27.5	57	24	5.5	9 spot face depth 5.5	69	M6 depth 11	M8 depth 13	10	14	16	40	5	7
ø50	58.5	50.5	10.5	10.5(10.5)	Rc 1/4	64	32.5(36)	28.5	71	33	6.9	11 spot face depth 6.5	86	M8 depth 13	M10 depth 15	15	17	20	50	7	8
ø63	64	56	13	11(13)	Rc 1/4	77	39(42.5)	28.5	84	33	8.7	14 spot face depth 9	103	M10 depth 25	M10 depth 15	15	17	20	60	7	8
ø80	73.5	63.5	16	13(16)	Rc 3/8	98	49.5(53)	28.5	104	38	10.5	17.5 spot face depth 11	132	M12 depth 28	M16 depth 21	15	22	25	77	6	10
ø100	85	73	23	15(23)	Rc 3/8	117	59(62.5)	28.5	123.5	38	10.5	17.5 spot face depth 11	156	M12 depth 28	M20 depth 27	15	27	30	94	6.5	12

Switch dimensions / Bore size (mm)	Reed T0H/T0V, T5H/T5V		Proximity T2H/T2V, T3H/T3V T2WH/T2WV, T3WH/T3WV	
	HD *2	RD *2	HD *2	RD *2
ø32	8.5(16)	14(14)	8.5(16)	14(14)
ø40	9.5(19)	19.5(19.5)	9.5(19)	19.5(19.5)
ø50	10(19)	20(25)	10(19)	20(25)
ø63	17.5(23)	18(23)	17.5(23)	18(23)
ø80	22(28)	20.5(25.5)	22.5(28)	20.5(25.5)
ø100	28(33.5)	24.5(29.5)	28(33.5)	24.5((29.5)

● *1 : To calculate A + stroke or B + stroke when using custom stroke, apply the next longer standard stroke (instead of the custom stroke) to the stroke value. (Example) If the custom stroke is 7 mm, apply the standard stroke of 10 mm.

● *2 : When longer than 150 mm stroke for ø32 to ø50 or longer than 200 mm stroke for ø63 to ø100, A and B dimensions are indicated in Table 2 and there is no spot face J. HD, RD and D dimensions are indicated in ( ).

● *3 : HD and RD dimensions for 5 mm stroke differ from these dimensions according to the setting.

● *4 : Refer to page 1315 for HD, RD and protruding dimensions of the 2-color LED, off-delay, AC magnetic field proof, T1* and T8* switches.

● *5 : Dimensions in ( ) of FA are for the L-shaped lead wire.

● *6 : Refer to pages 1320 to 1325 for dimensions including the accessories and pages 1108 to 1115 for dimensions of individual accessories.

Table 2

Bore size	With switch	
	A *2	B *2
ø32	57.5	50.5
ø40	66	59
ø50	72	64
ø63	74	66
ø80	83.5	73.5
ø100	95	83

● Dimensions of rod end male thread part

Code / Bore size (mm)	a'	c'	H	kk'	M	MM	T	wf
ø 32	23.5	20.5	22	M14x1.5	14	16	8	5
ø 40	23.5	20.5	22	M14x1.5	14	16	8	5
ø 50	28.5	26	27	M18x1.5	17	20	11	5
ø 63	28.5	26	27	M18x1.5	17	20	11	5
ø 80	35.5	32.5	32	M22x1.5	22	25	13	8
ø100	35.5	32.5	41	M26x1.5	27	30	16	8

Dimensions

● SSD-K-32 to 100 (without switch)

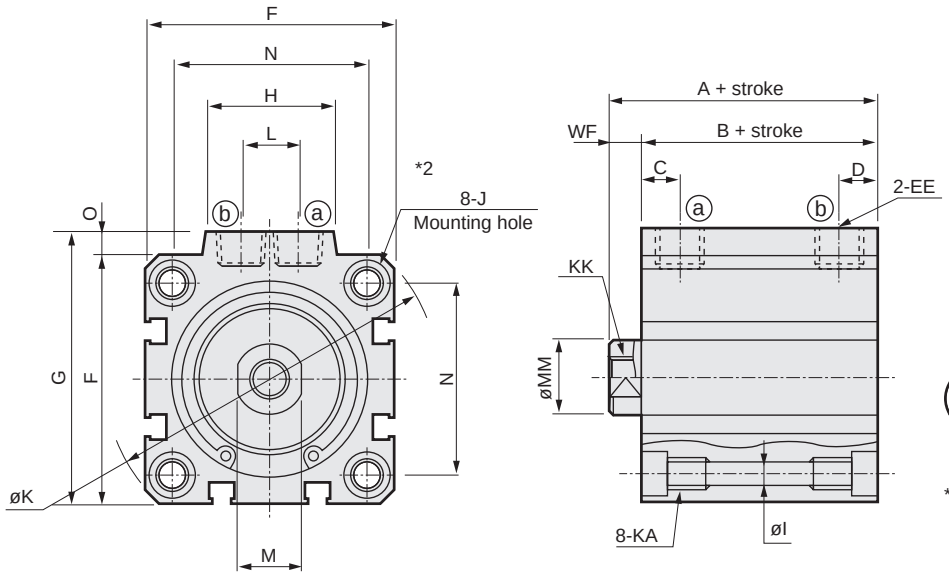

● Rod end male thread

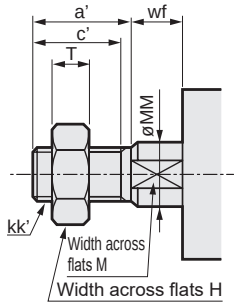

[Bore size ø100]

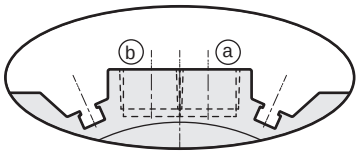

* Only for ø100, the port surface has switch grooves.

Code / Bore size (mm)	Dimensions without switch and common dimensions																		
	A *1	B *1	C	D *2	EE	F	G	H	I	J	K	KA	KK	L	M	MM	N	O	WF
ø32	40	33	8	8(8)	Rc 1/8	45	49.5	24	5.5	9 spot face depth 5.5	60	M6 depth 11	M8 depth 13	10	14	16	34	4.5	7
ø40	46.5	39.5	12	8.5(12)	Rc 1/8	52	57	24	5.5	9 spot face depth 5.5	69	M6 depth 11	M8 depth 13	10	14	16	40	5	7
ø50	48.5	40.5	10.5	10.5(10.5)	Rc 1/4	64	71	33	6.9	11 spot face depth 6.5	86	M8 depth 13	M10 depth 15	15	17	20	50	7	8
ø63	54	46	13	11(13)	Rc 1/4	77	84	33	8.7	14 spot face depth 9	103	M10 depth 25	M10 depth 15	15	17	20	60	7	8
ø80	63.5	53.5	16	13(16)	Rc 3/8	98	104	38	10.5	17.5 spot face depth 11	132	M12 depth 28	M16 depth 21	15	22	25	77	6	10
ø100	75	63	23	15(23)	Rc 3/8	117	123.5	38	10.5	17.5 spot face depth 11	156	M12 depth 28	M20 depth 27	15	27	30	94	6.5	12

Table 2

Bore size	A *2	B *2
ø32	47.5	40.5
ø40	56	49
ø50	62	54
ø63	64	56
ø80	73.5	63.5
ø100	85	73

● *1 : To calculate A + stroke or B + stroke when using custom stroke, apply the next longer standard stroke (instead of the custom stroke) to the stroke value. (Example) If the custom stroke is 7 mm, apply the standard stroke of 10 mm.

● *2 : When longer than 150 mm stroke for ø32 to ø50 or longer than 200 mm stroke for ø63 to ø100, A and B dimensions are indicated in Table 2 and there is no spot face J. D dimensions are indicated in ( ).

● *3 : Refer to pages 1320 to 1325 for dimensions including the accessories and pages 1108 to 1115 for dimensions of individual accessories.

● Dimensions of rod end male thread part

Code / Bore size (mm)	a'	c'	H	kk'	M	MM	T	wf
ø 32	23.5	20.5	22	M14x1.5	14	16	8	5
ø 40	23.5	20.5	22	M14x1.5	14	16	8	5
ø 50	28.5	26	27	M18x1.5	17	20	11	5
ø 63	28.5	26	27	M18x1.5	17	20	11	5
ø 80	35.5	32.5	32	M22x1.5	22	25	13	8
ø100	35.5	32.5	41	M26x1.5	27	30	16	8

Note: Refer to pages 1320 to 1325 for dimensions including the accessories and pages 1108 to 1115 for dimensions of individual accessories.

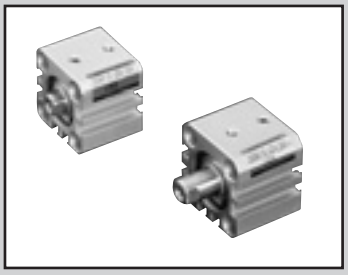

Compact cylinder
Single acting/push

SSD-X Series

Single acting/pull

SSD-Y Series

● Bore size: ø12/ø16/ø20/ø25/ø32/ø40/ø50

JIS symbol SSD-X

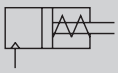

SSD-Y

Specifications

Item	SSD-X SSD-XL (with switch) / SSD-Y SSD-YL (with switch)						
Bore size mm	ø12	ø16	ø20	ø25	ø32	ø40	ø50
Actuation	SSD-X, XL: single acting/push, SSD-Y, YL: single acting/pull						
Working fluid	Compressed air						
Max. working pressure MPa	1.0 (≈150 psi, 10 bar)						
Min. working pressure MPa	0.2 (≈29 psi, 2 bar)		0.17 (≈25 psi, 1.7 bar)		0.12 (≈17 psi, 1.2 bar)		
Proof pressure MPa	1.6 (≈230 psi, 16 bar)						
Ambient temperature °C	-10 (14°F) to 60 (140°F) (no freezing)						
Port size	M5				Rc 1/8		Rc 1/4
Stroke tolerance mm	+1.0 0						
Working piston speed mm/s	50 to 500						
Cushion	None						
Lubrication	Not required (use turbine oil ISO VG32 if necessary for lubrication)						
Allowable absorbed energy J	0.004	0.01	0.016	0.021	0.025	0.092	0.1

Note: Do not leave the single acting cylinder pressurized for a long time. If it is left pressurized for long periods, the piston rod may not return due to spring load when the pressure is released. Use the double acting if the cylinder needs to be left pressurized for long periods.

Stroke

Bore size (mm)	Standard stroke (mm)	Max. stroke (mm)	Min. stroke (mm)
ø12	5, 10	10	5
ø16			
ø20			
ø25			
ø32			
ø40	10, 20	20	10
ø50			

*1 : When using the type with switch, refer to the table below.
*2 : Refer to pages 1320 and 1321 for the min. stroke with mounting brackets LB and LB2.

Number of installed switches and min. stroke (mm)

Switch quantity	1	2
Switch model No. / Bore size (mm)	T*	T*
ø12	5	5
ø16	5	5
ø20	5	5
ø25	5	5
ø32	5	5
ø40	10	10
ø50	10	10

Note: Less than 10 mm with the 2-color LED, off-delay, AC magnetic field proof, T1* or T8* switch is not available.

Switch specifications

● 1-color/2-color LED/for AC magnetic field proof

Item	2-wire proximity				3-wire proximity				2-wire reed							2-wire proximity
	T1H/ T1V	T2H/T2V/ T2JH/T2JV	T2YH/ T2YV	T2WH/ T2WV	T3H/ T3V	T3PH/ T3PV	T3YH/ T3YV	T3WH/ T3WV	T0H/T0V		T5H/T5V		T8H/T8V			T2YD (*4) T2YDT
Applications	For programmable controller, relay, compact solenoid valve	Dedicated for programmable controller			For programmable controller, relay				For programmable controller, relay		For programmable controller, relay (no lamp), serial		For programmable controller, relay			Dedicated for programmable controller
Output method	-				NPN output	PNP output	NPN output	NPN output	-							
Pwr. supp. V.	-				10 to 28 VDC				-							
Load voltage	85 to 265 VAC	10 to 30 VDC		24 VDC ±10%	30 VDC or less				12/24 VDC	100/110 VAC	5/12/24 VDC	100/110 VAC	12/24 VDC	110 VAC	220 VAC	24 VDC ±10%
Load current	5 to 100 mA	5 to 20 mA (*3)			100 mA or less		50 mA or less		5 to 50 mA	7 to 20 mA	50 mA or less	20 mA or less	5 to 50 mA	7 to 20 mA	7 to 10 mA	5 to 20 mA
Indicator	LED (Lit when ON)	LED (Lit when ON)	Red/green LED (Lit when ON)	Red/green LED (Lit when ON)	LED (Lit when ON)	Yellow LED (Lit when ON)	Red/green LED (Lit when ON)	Red/green LED (Lit when ON)	LED (Lit when ON)		No indicator lamp		LED (Lit when ON)			Red/green LED (Lit when ON)
Leakage current	≤ 1 mA at 100 VAC, ≤ 2 mA at 200 VAC	1 mA or less			10 μA or less				0 mA							1 mA or less
Weight g	1 m:33 3 m:87 5 m:142	1 m:18 3 m:49 5 m:80	1 m:33 3 m:87 5 m:142	1 m:18 3 m:49 5 m:80	1 m:18 3 m:49 5 m:80		1 m:33 3 m:87 5 m:142	1 m:18 3 m:49 5 m:80	1 m:18 3 m:49 5 m:80				1 m:33 3 m:87 5 m:142			1 m:61 3 m:166 5 m:272

*1 : Refer to Ending Page 1 for detailed switch specifications and dimensions.
*2 : Switches other than the above models, such as switches with connectors, are also available. Refer to Ending Page 1.
*3 : The max. load current is 20 mA at 25°C. The current is lower than 20 mA if the operating ambient temperature around the switch is higher than 25˚C. (5 to 10 mA at 60°C)
*4 : Switch for AC magnetic field (T2YD/T2YDT) cannot be used in DC magnetic field.

Cylinder weight table (the weight of the switches is when there are 2 cylinder switches.)

(Unit: g)

Stroke (mm)	5		10		20	
Bore size (mm)	No switch	With switch	No switch	With switch	No switch	With switch
ø12	40	80	49	89	-	-
ø16	52	92	64	104	-	-
ø20	74	114	89	129	-	-
ø25	107	147	127	167	-	-
ø32	155	195	183	223	-	-
ø40	-	-	285	325	358	398
ø50	-	-	459	499	572	612

SSD-X/SSD-Y spring load

(Unit: N)

Bore size (mm)	Stroke (mm)	SSD-X		SSD-Y	
		When stroke = 0	At full stroke	When stroke = 0	At full stroke
ø12	5	8.7	13.7	2.9	11
	10	2.9	13.7	2.9	11.3
ø16	5	10.2	15.1	3.5	13.2
	10	5.4	15.1	3.5	13.2
ø20	5	16.8	24	11.8	30.4
	10	9.7	24	12.7	30.3
ø25	5	17.1	23.5	10.8	26.5
	10	10.8	23.5	10.8	26.5
ø32	5	24.1	28.5	17	27
	10	19.6	28.5	17.9	27.4
ø40	10	28.9	38.2	19.3	33
	20	19.6	38.2	19.9	40.2
ø50	10	33.3	47.9	24.5	84.3
	20	18.8	47.9	23.1	82.3

Theoretical thrust table

(Unit: N)

Bore size (mm)	Operating direction	Working pressure MPa									
		0.15	0.2	0.3	0.4	0.5	0.6	0.7	0.8	0.9	1.0
ø12	Push	-	22.6	33.9	45.2	56.5	67.9	79.2	90.5	1.02×10^2	1.13×10^2
	Pull	-	17.0	25.4	33.9	42.4	50.9	59.4	67.9	76.3	84.8
ø16	Push	-	40.2	60.3	80.4	1.01×10^2	1.21×10^2	1.41×10^2	1.61×10^2	1.81×10^2	2.01×10^2
	Pull	-	30.2	45.2	60.3	75.4	90.5	1.06×10^2	1.21×10^2	1.36×10^2	1.51×10^2
ø20	Push	-	62.8	94.2	1.26×10^2	1.57×10^2	1.88×10^2	2.20×10^2	2.51×10^2	2.83×10^2	3.14×10^2
	Pull	-	47.1	70.7	94.2	1.18×10^2	1.41×10^2	1.65×10^2	1.88×10^2	2.12×10^2	2.36×10^2
ø25	Push	-	98.2	1.47×10^2	1.96×10^2	2.45×10^2	2.95×10^2	3.44×10^2	3.93×10^2	4.42×10^2	4.91×10^2
	Pull	-	75.6	1.13×10^2	1.51×10^2	1.89×10^2	2.27×10^2	2.64×10^2	3.02×10^2	3.40×10^2	3.78×10^2
ø32	Push	1.21×10^2	1.61×10^2	2.41×10^2	3.22×10^2	4.02×10^2	4.83×10^2	5.63×10^2	6.43×10^2	7.24×10^2	8.04×10^2
	Pull	90.5	1.21×10^2	1.81×10^2	2.41×10^2	3.02×10^2	3.62×10^2	4.22×10^2	4.83×10^2	5.43×10^2	6.03×10^2
ø40	Push	1.88×10^2	2.51×10^2	3.77×10^2	5.03×10^2	6.28×10^2	7.54×10^2	8.80×10^2	1.01×10^3	1.13×10^3	1.26×10^3
	Pull	1.58×10^2	2.11×10^2	3.17×10^2	4.22×10^2	5.28×10^2	6.33×10^2	7.39×10^2	8.44×10^2	9.50×10^2	1.06×10^3
ø50	Push	2.95×10^2	3.93×10^2	5.89×10^2	7.85×10^2	9.82×10^2	1.18×10^3	1.37×10^3	1.57×10^3	1.77×10^3	1.96×10^3
	Pull	2.47×10^2	3.30×10^2	4.95×10^2	6.60×10^2	8.25×10^2	9.90×10^2	1.15×10^3	1.32×10^3	1.48×10^3	1.65×10^3

How to order

No switch (without magnet for switch)

SSD-X — 12 ○ - 5 — N - LB - I

With switch (built-in magnet for switch)

SSD-XL - 12 ○ - 5 - T0H - R - N - LB - I

2-color LED/off-delay/with T1* switch (ø12/ø16 only)
(built-in magnet for switch)

SSD-XL1 - 12 ○ - 10 - T2YH - R - N - LB - I

- Ⓐ Model No.
- Ⓑ Bore size
- Ⓒ Port thread
- Ⓓ Stroke
- Ⓔ Switch model No. *1 *2 *11
- Ⓕ Switch quantity
- Ⓖ Option *3 *4
- Ⓗ Mounting bracket *5 *6
- Ⓘ Accessory *7

Code	Description
Ⓐ Model No.	
SSD-X	Single acting/push
SSD-XL	Single acting/push/with switch
SSD-XL1	ø12, ø16 2-color LED, with preventive maintenance switch
SSD-Y	Single acting/pull
SSD-YL	Single acting/pull/with switch
SSD-YL1	ø12, ø16 2-color LED, off-delay, with T1* switch
Ⓑ Bore size (mm)	
12	ø12
16	ø16
20	ø20
25	ø25
32	ø32
40	ø40
50	ø50
Ⓒ Port thread	
Blank	Rc thread
NN	NPT thread (ø32 and over) (made-to-order product)
GN	G thread (ø32 and over) (made-to-order product)

Ⓓ Stroke (mm)

	Bore size (mm)	ø12	ø16	ø20	ø25	ø32	ø40	ø50
5	5	●	●	●	●	●		
10	10	●	●	●	●	●	●	●
20	20						●	●

Ⓔ Switch model No.

Axial lead wire	Radial lead wire	Contact	Voltage AC	Voltage DC	Indicator	Lead wire
TOH*	T0V*	Reed	●	●	1-color LED	2-wire
T5H*	T5V*	Reed	●	●	No indicator lamp	2-wire
T8H*	T8V*	Reed	●	●	1-color LED	2-wire
T1H*	T1V*	Proximity	●		1-color LED	2-wire
T2H*	T2V*	Proximity		●	1-color LED	2-wire
T3H*	T3V*	Proximity		●	1-color LED	3-wire
T3PH*	T3PV*	Proximity		●	1-color LED	3-wire
T2WH*	T2WV*	Proximity		●	2-color LED	2-wire
T2YH*	T2YV*	Proximity		●	2-color LED	2-wire
T3WH*	T3WV*	Proximity		●	2-color LED	3-wire
T3YH*	T3YV*	Proximity		●	2-color LED	3-wire
T2JH*	T2JV*	Proximity		●	1-color LED off-delay	2-wire
T2YD*	-	Proximity		●	2-color LED AC magnetic field	2-wire
T2YDT*	-	Proximity		●	2-color LED AC magnetic field	2-wire
T2HR3	T2VR3	Proximity		●	1-color LED (bend resist lead wire specs)	2-wire

*** Lead wire length**	
Blank	1 m (standard)
3	3 m (option)
5	5 m (option)
Ⓕ Switch quantity	
R	1 on rod side
H	1 on head side
D	2
Ⓖ Option	
Blank	Rod end female thread
N	Rod end male thread
M	Piston rod material (stainless steel)
Ⓗ Mounting bracket	
LB	Axial foot
LB2	Axial foot (compact)
CB	Clevis bracket (pin and snap ring included)
CB2	Clevis bracket (compact) (pin and snap ring included)
FA	Rod side flange
FB	Head side flange
Ⓘ Accessory (available when rod end male thread "N" is selected)	
I	Rod eye
I2	Rod eye (compact)
Y	Rod clevis (pin and snap ring included)
Y2	Rod clevis (compact) (pin and snap ring included)

⚠ Precautions for model No. selection

*1 : Switches other than Ⓔ Switch model No. are also available. (Made to order) Refer to Ending Page 1 for details.
2 : An AC magnetic field proof switch cannot be installed on ø12 and ø16. In addition, T8 switch cannot be installed on ø12 to ø32.
*3 : Piston rod of ø12 to ø25 is stainless steel as standard. C-snap ring is stainless steel instead of steel. The rod end male thread nut is stainless steel.
*4 : Copper and PTFE free as standard.
*5 : The mounting bracket is included at shipment.
*6 : The projection dimension of piston rod WF when LB2 or FA is selected is different from that of the standard. Refer to the dimensions on pages 1109 and 1110. The number of the specified protruding dimension will be added at the end of the model No. printed on the metal plate on the body.
*7 : "I" and "Y" cannot be selected together.
*8 : Refer to Ending Page 85 for custom specifications of rod end form.
*9 : Refer to pages 1086 and 1087 for combinations of variations/options.
10 : Less than 10 mm with the 2-color LED, off-delay, AC magnetic field proof, T1 or T8* switch is not available.
*11 : Switches are shipped with the product. Contact CKD if assembling before shipment is necessary.

[Example of model No.]

SSD-XL-12-5-T0H-R-N

Model: Compact cylinder

- Ⓐ Model No. : Single acting push
- Ⓑ Bore size : ø12 mm
- Ⓒ Port thread : Rc thread
- Ⓓ Stroke : 5 mm
- Ⓔ Switch model No. : Reed switch T0H
  · Lead wire length 1 m
- Ⓕ Switch quantity : 1 on rod side
- Ⓖ Option : Rod end male thread

How to order switch

SW - T0H

Switch model No.
(Item Ⓔ on page 1128)

How to order mounting bracket

Bore size (mm) / Mounting bracket	ø12	ø16	ø20	ø25	ø32	ø40	ø50
Foot (LB)	SSD-LB-12	SSD-LB-16	SSD-LB-20	SSD-LB-25	SSD-LB-32	SSD-LB-40	SSD-LB-50
Foot (LB2)	SSD-LB2-12	SSD-LB2-16	SSD-LB2-20	SSD-LB2-25	SSD-LB2-32	SSD-LB2-40	SSD-LB2-50
Flange (FA/FB)	SSD-FA-12	SSD-FA-16	SSD-FA-20	SSD-FA-25	SSD-FA-32	SSD-FA-40	SSD-FA-50
Clevis bracket (CB)	SSD-CB-12	SSD-CB-16	SSD-CB-20	SSD-CB-25	SSD-CB-32	SSD-CB-40	SSD-CB-50
Clevis bracket (CB2)	SSD-CB2-12	SSD-CB2-16	SSD-CB2-20	SSD-CB2-25	SSD-CB2-32	SSD-CB2-40	SSD-CB2-50

*1: The foot mounting bracket is provided as 2 pcs./set.

SCP*3
CMK2
CMA2
SCM
SCG
SCA2
SCS2
CKV2
CAV2/COVP/N2
SSD2
SSG
SSD
CAT
MDC2
MVC
SMG
MSD/MSDG
FC*
STK
SRL3
SRG3
SRM3
SRT3
MRL2
MRG2
SM-25
ShkAbs
FJ
FK
Spd Contr
Ending

Internal structure and parts list

● SSD-XL (single acting/push/with switch)

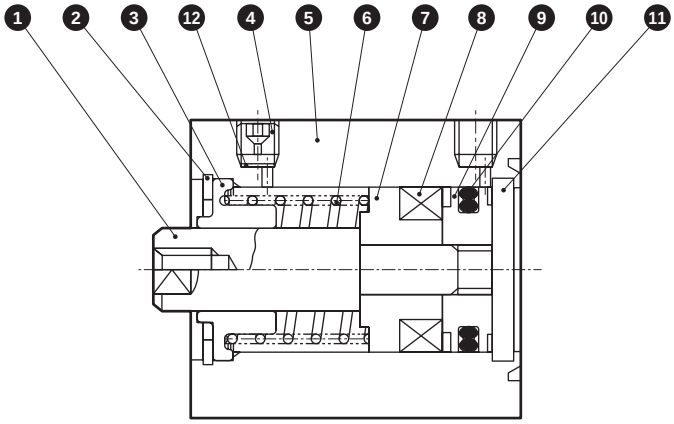

● SSD-X (single acting/push)

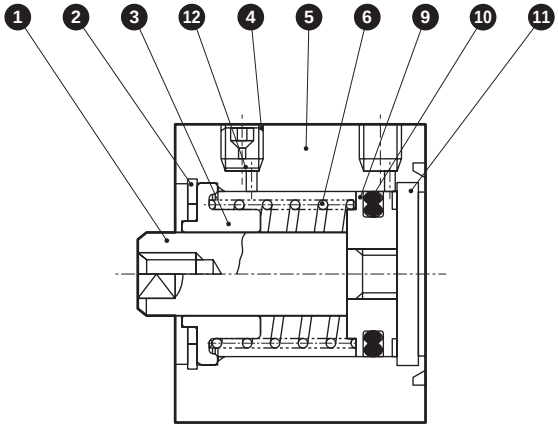

No.	Part name	Material	Remarks	No.	Part name	Material	Remarks
1	Piston rod	ø12 to ø25: Stainless steel ø32 to ø50: Steel	ø16 to ø50: Industrial chrome plating	7	Spacer	Aluminum alloy	Chromate
				8	Magnet	Plastic	
2	C-snap ring	Steel	Zinc phosphate	9	Piston	Aluminum alloy	Chromate
3	Rod metal	Special aluminum	Alumite	10	Piston packing	Nitrile rubber	
4	Plug	Stainless steel		11	Cover	ø12 to ø25: Stainless steel ø32 to ø50: Aluminum alloy	ø32 to ø50: Alumite
5	Body	Aluminum alloy	Hard alumite				
6	Spring	Piano wire	Electrodeposition	12	Stainless steel wire mesh	Stainless steel	

Repair parts list

Bore size (mm)	Kit No.	Repair parts No.
ø12	SSD-X-12K	⑩
ø16	SSD-X-16K	
ø20	SSD-X-20K	
ø25	SSD-X-25K	
ø32	SSD-X-32K	
ø40	SSD-X-40K	
ø50	SSD-X-50K	

Internal structure and parts list

● SSD-YL (single acting/pull/with switch)

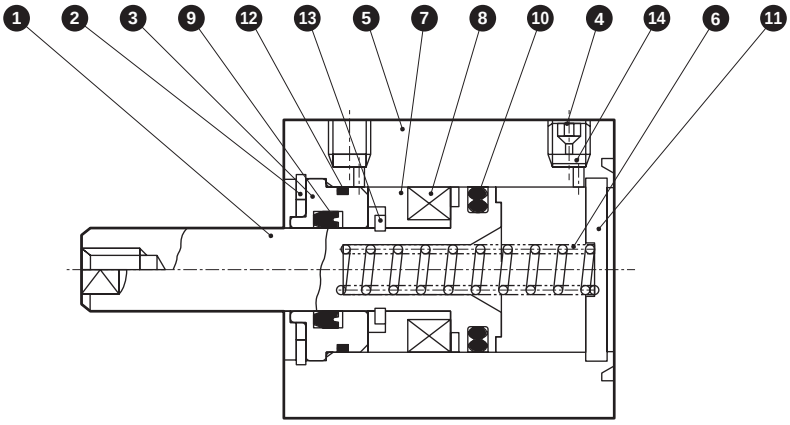

● SSD-Y (single acting/pull)

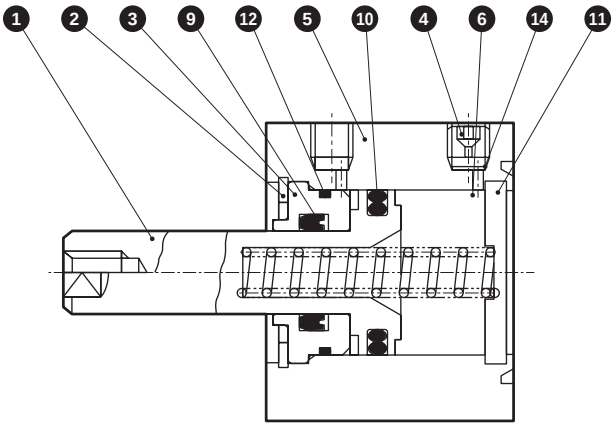

No.	Part name	Material	Remarks	No.	Part name	Material	Remarks
1	Piston	Stainless steel		8	Magnet	Plastic	
				9	Rod packing	Nitrile rubber	
2	C-snap ring	Steel	Zinc phosphate	10	Piston packing	Nitrile rubber	
3	Rod metal	Special aluminum alloy	Alumite	11	Cover	ø12 to ø25: Stainless steel ø32 to ø50: Aluminum alloy	ø32 to ø50: Alumite
4	Plug	Stainless steel					
5	Body	Aluminum alloy	Hard alumite	12	Metal gasket	Nitrile rubber	
6	Spring	Piano wire	Electrodeposition	13	Round S type snap ring	Steel	Zinc phosphate
7	Spacer	Aluminum alloy	Chromate	14	Stainless steel wire mesh	Stainless steel	

Repair parts list

Bore size (mm)	Kit No.	Repair parts No.
ø12	SSD-Y-12K	9 10 12
ø16	SSD-Y-16K	
ø20	SSD-Y-20K	
ø25	SSD-Y-25K	
ø32	SSD-Y-32K	
ø40	SSD-Y-40K	
ø50	SSD-Y-50K	

SCP*3
CMK2
CMA2
SCM
SCG
SCA2
SCS2
CKV2
CAV2/COVP/N2
SSD2
SSG
SSD
CAT
MDC2
MVC
SMG
MSD/MSDG
FC*
STK
SRL3
SRG3
SRM3
SRT3
MRL2
MRG2
SM-25
ShkAbs
FJ
FK
Spd Contr
Ending

Dimensions CAD

● SSD-XL-12 to 25 (with switch)

ø12/ø16

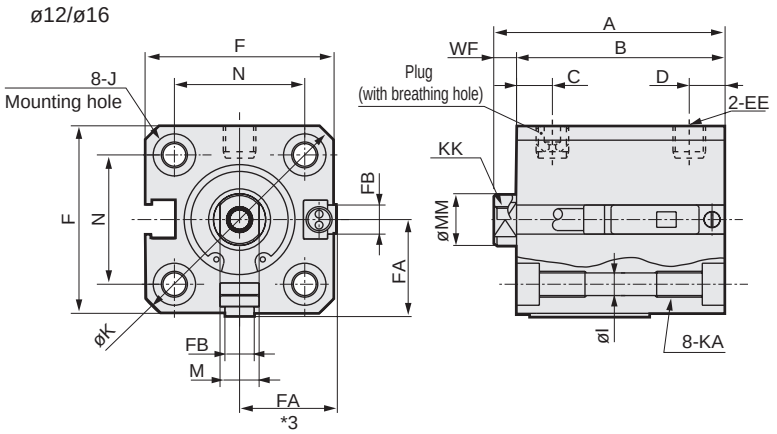

● Rod end male thread

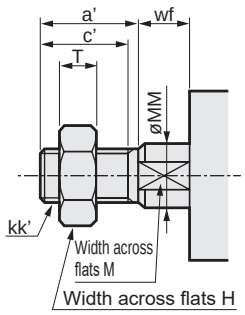

ø20/ø25

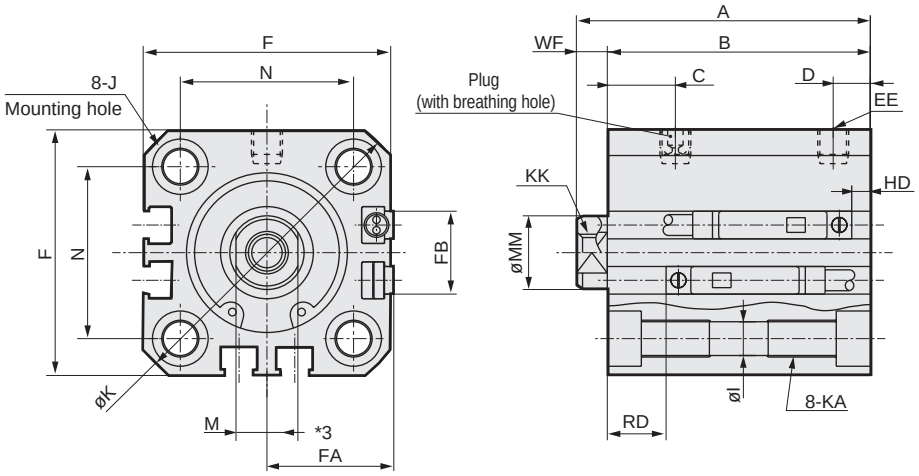

Code / Bore size (mm)		Common dimensions with switch																
		A	B	C	D	EE	F	FA *3	FB	I	J	K	KA	KK	M	MM	N	WF
ø12	Stroke mm 5	35.5	32	5.5	5.5	M5	25	13(16.5)	4.5	3.5	6.5 spot face depth 3.5	32	M4 depth 7	M3 depth 6	5	6	15.5	3.5
	Stroke mm 10																	
ø16	Stroke mm 5	35.5	32	5.5	5.5	M5	29	15(18.5)	4.5	3.5	6.5 spot face depth 3.5	38	M4 depth 7	M4 depth 8	6	8	20	3.5
	Stroke mm 10																	
ø20	Stroke mm 5	39	34.5	8	5.5	M5	36	18.5(22)	12.5	5.5	9 spot face depth 5.5	47	M6 depth 11	M5 depth 7	8	10	25.5	4.5
	Stroke mm 10	44	39.5															
ø25	Stroke mm 5	42.5	37.5	11	6	M5	40	20.5(24)	13.5	5.5	9 spot face depth 5.5	51	M6 depth 11	M6 depth 12	10	12	28	5
	Stroke mm 10	47.5	42.5															

Dimensions of rod end male thread

Code / Bore size (mm)	a'	c'	H	kk'	M	MM	T	wf
ø 12	10.5	9	8	M5	5	6	3.2	3.5
ø 16	12	10	10	M6	6	8	3.6	3.5
ø 20	14	12	13	M8	8	10	5	4.5
ø 25	17.5	15	17	M10x1.25	10	12	6	5

Switch dimensions / Bore size (mm)	Reed T0H/T0V, T5H/T5V		Proximity T2H/T2V, T3H/T3V T2WH/T2WV, T3WH/T3WV	
	HD *1	RD *1	HD *1	RD *1
ø12	0	2.5	0	2.5
ø16	0	2	0	2
ø20	3	6.5	3	6.5
ø25	3	9.5	3	9.5

*1 : HD and RD dimensions for 5 mm stroke differ from these dimensions according to the setting.
2 : Refer to page 1312 for HD, RD and protruding dimensions of the 2-color LED, off-delay, AC magnetic field proof, T1 and T8* switches.
*3 : Dimensions in ( ) of FA are for the L-shaped lead wire.
*4 : For dimensions of individual accessories, refer to pages 1108 to 1115.

Dimensions

● SSD-X-12 to 25 (without switch)

ø12/ø16

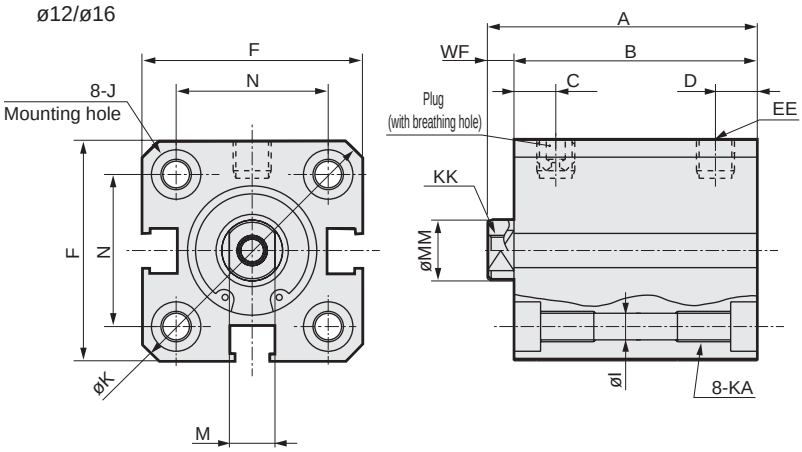

● Rod end male thread

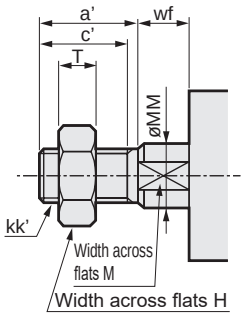

ø20/ø25

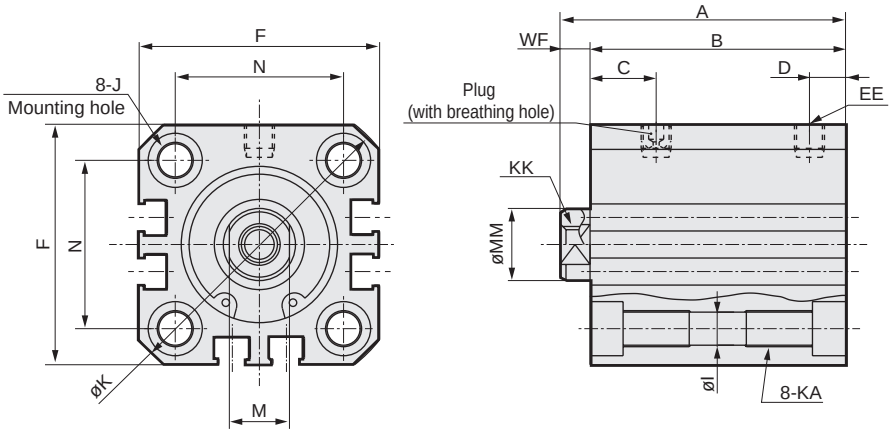

Code / Bore size (mm)			Dimensions without switch and common dimensions														
			A	B	C	D	EE	F	I	J	K	KA	KK	M	MM	N	WF
ø12	Stroke mm	5	25.5	22	5.5	5.5	M5	25	3.5	6.5 spot face depth 3.5	32	M4 depth 7	M3 depth 6	5	6	15.5	3.5
		10	30.5	27													
ø16	Stroke mm	5	25.5	22	5.5	5.5	M5	29	3.5	6.5 spot face depth 3.5	38	M4 depth 7	M4 depth 8	6	8	20	3.5
		10	30.5	27													
ø20	Stroke mm	5	29	24.5	8	5.5	M5	36	5.5	9 spot face depth 5.5	47	M6 depth 11	M5 depth 7	8	10	25.5	4.5
		10	34	29.5													
ø25	Stroke mm	5	32.5	27.5	11	6	M5	40	5.5	9 spot face depth 5.5	51	M6 depth 11	M6 depth 12	10	12	28	5
		10	37.5	32.5													

Dimensions of rod end male thread

Code / Bore size (mm)	a'	c'	H	kk'	M	MM	T	wf
ø 12	10.5	9	8	M5	5	6	3.2	3.5
ø 16	12	10	10	M6	6	8	3.6	3.5
ø 20	14	12	13	M8	8	10	5	4.5
ø 25	17.5	15	17	M10x1.25	10	12	6	5

*1: For dimensions of individual accessories, refer to pages 1108 to 1115.

Dimensions

● SSD-XL-32 to 50 (with switch)

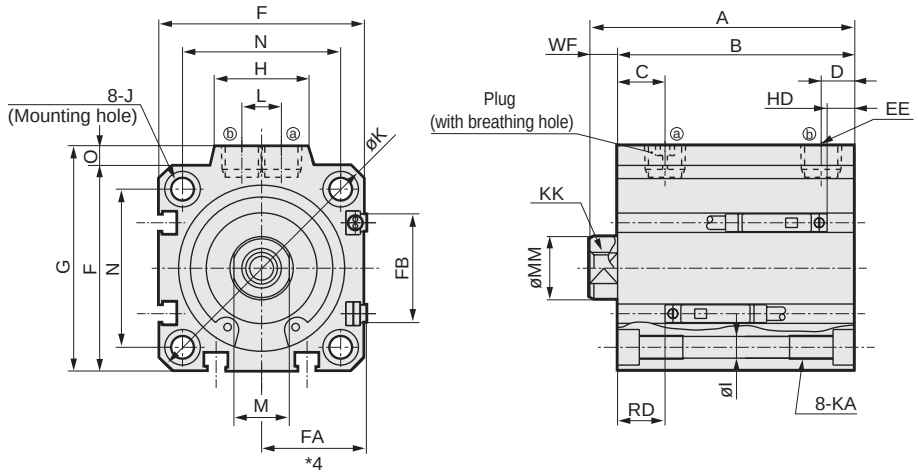

● Rod end male thread

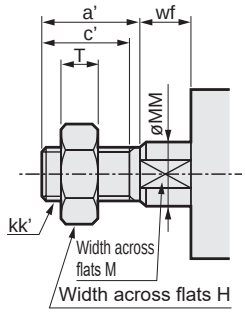

● SSD-X-32 to 50 (without switch)

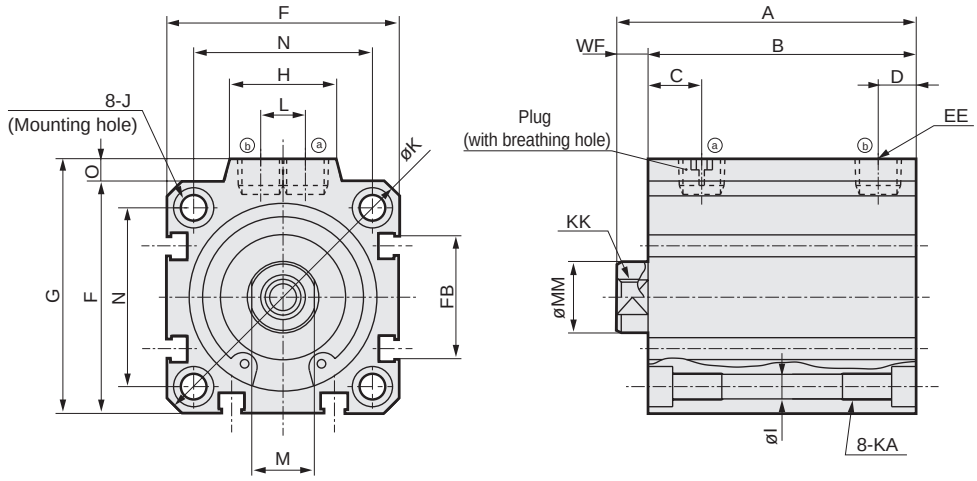

Code / Bore size (mm)			No switch A	No switch B	Common dimensions with switch A	B	C	D	EE	F	FA *4	FB	G	H	I	J	K	KA	KK	L	M	MM	N	O	WF
ø32	Stroke mm	5	35	28	45	38	8	8	Rc1/8	45	23 (26.5)	20.5	49.5	24	5.5	9 spot face depth 5.5	60	M6 Depth 11	M8 Depth 13	10	14	16	34	4.5	7
		10	40	33	50	43																			
ø40	Stroke mm	10	46.5	39.5	56.5	49.5	12	8.5	Rc1/8	52	26.5 (30)	27.5	57	24	5.5	9 spot face depth 5.5	69	M6 Depth 11	M8 Depth 13	10	14	16	40	5	7
		20	56.5	49.5	66.5	59.5																			
ø50	Stroke mm	10	48.5	40.5	58.5	50.5	10.5	10.5	Rc1/4	64	32.5 (36)	28.5	71	33	6.9	11 spot face depth 6.5	86	M8 Depth 13	M10 Depth 15	15	17	20	50	7	8
		20	58.5	50.5	68.5	60.5																			

Dimensions of rod end male thread

Code / Bore size (mm)	a'	c'	H	kk'	M	MM	T	wf
ø 32	23.5	20.5	22	M14x1.5	14	16	8	5
ø 40	23.5	20.5	22	M14x1.5	14	16	8	5
ø 50	28.5	26	27	M18x1.5	17	20	11	5

Switch dimensions	Reed T0H/T0V, T5H/T5V		Proximity T2H/T2V, T3H/T3V T2WH/T2WV, T3WH/T3WV	
Bore size (mm)	HD *1	RD *1	HD *1	RD *1
ø32	3.5	9	3.5	9
ø40	7	12	7	12
ø50	7.5	12.5	7.5	12.5

- *1 : HD and RD dimensions for 5 mm stroke differ from these dimensions according to the setting.
- *2 : Refer to page 1313 for HD and RD dimensions of the 2-color LED, off-delay, AC magnetic field proof, T1* and T8* switches.
- *3 : Refer to page 1313 for the protruding dimensions of the 2-color LED, off-delay, AC magnetic field proof, T1* and T8* switches.
- *4 : Dimensions in ( ) of FA are for the L-shaped lead wire.
- *5 : For dimensions of individual accessories, refer to pages 1108 to 1115.

Note: Refer to pages 1320 to 1325 for dimensions including the accessories and pages 1108 to 1115 for dimensions of individual accessories.

Dimensions

● SSD-YL-12 to 25 (with switch)

ø12/ø16

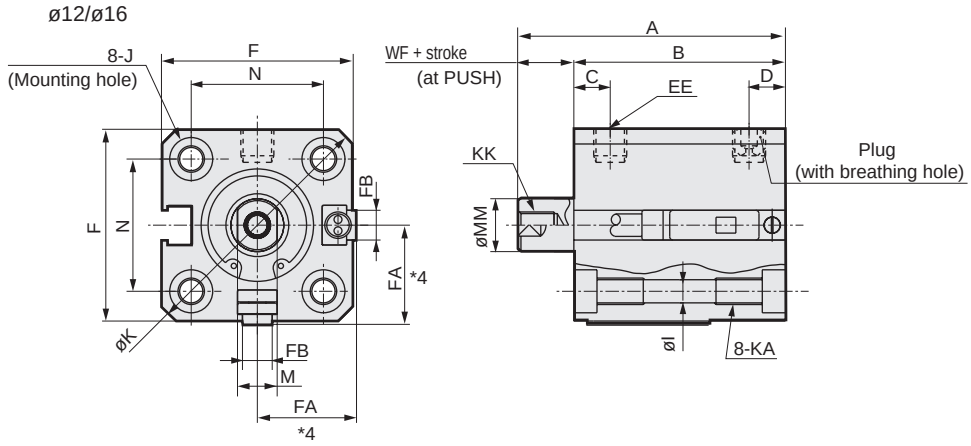

● Rod end male thread

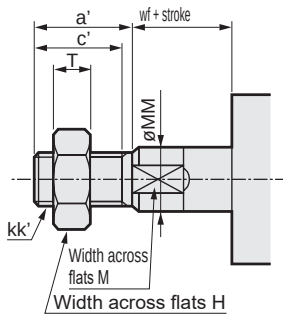

ø20/ø25

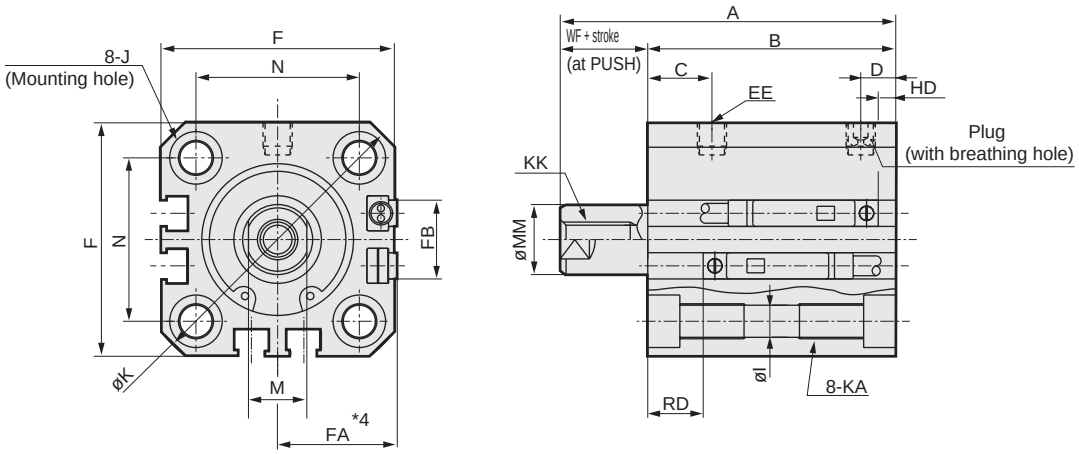

Code / Bore size (mm)			Common dimensions with switch																
			A	B	C	D	EE	F	FA *4	FB	I	J	K	KA	KK	M	MM	N	WF
ø12	Stroke mm	5	40.5	32	5.5	5.5	M5	25	13	4.5	3.5	6.5 spot face depth 3.5	32	M4 depth 7	M3 depth 6	5	6	15.5	3.5
		10	45.5						(16.5)										
ø16	Stroke mm	5	40.5	32	5.5	5.5	M5	29	15	4.5	3.5	6.5 spot face depth 3.5	38	M4 depth 7	M4 depth 8	6	8	20	3.5
		10	45.5						(18.5)										
ø20	Stroke mm	5	44	34.5	8	5.5	M5	36	18.5	12.5	5.5	9 spot face depth 5.5	47	M6 depth 11	M5 depth 7	8	10	25.5	4.5
		10	54	39.5					(22)										
ø25	Stroke mm	5	47.5	37.5	11	6	M5	40	20.5	13.5	5.5	9 spot face depth 5.5	51	M6 depth 11	M6 depth 12	10	12	28	5
		10	57.5	42.5					(24)										

Dimensions of rod end male thread

Code / Bore size (mm)	a'	c'	H	kk'	M	MM	T	wf
ø 12	10.5	9	8	M5	5	6	3.2	3.5
ø 16	12	10	10	M6	6	8	3.6	3.5
ø 20	14	12	13	M8	8	10	5	4.5
ø 25	17.5	15	17	M10x1.25	10	12	6	5

Switch dimensions	Reed T0H/T0V, T5H/T5V		Proximity T2H/T2V, T3H/T3V T2WH/T2WV, T3WH/T3WV	
Bore size (mm)	HD *1	RD *1	HD *1	RD *1
ø12	0	2.5	0	2.5
ø16	0	2	0	2
ø20	3	6.5	3	6.5
ø25	3	9.5	3	9.5

- *1 : HD and RD dimensions for 5 mm stroke differ from these dimensions according to the setting.
- *2 : Refer to page 1312 for HD and RD dimensions of the 2-color LED, off-delay, AC magnetic field proof, T1* and T8* switches.
- *3 : Refer to page 1312 for the protruding dimensions of the 2-color LED, off-delay, AC magnetic field proof, T1* and T8* switches.
- *4 : Dimensions in ( ) of FA are for the L-shaped lead wire.
- *5 : For dimensions of individual accessories, refer to pages 1108 to 1115.

SCP*3
CMK2
CMA2
SCM
SCG
SCA2
SCS2
CKV2
CAV2/COVP/N2
SSD2
SSG
SSD
CAT
MDC2
MVC
SMG
MSD/MSDG
FC*
STK
SRL3
SRG3
SRM3
SRT3
MRL2
MRG2
SM-25
ShkAbs
FJ
FK
Spd Contr
Ending

Dimensions

● SSD-Y-12 to 25 (without switch)

● Rod end male thread

ø12/ø16

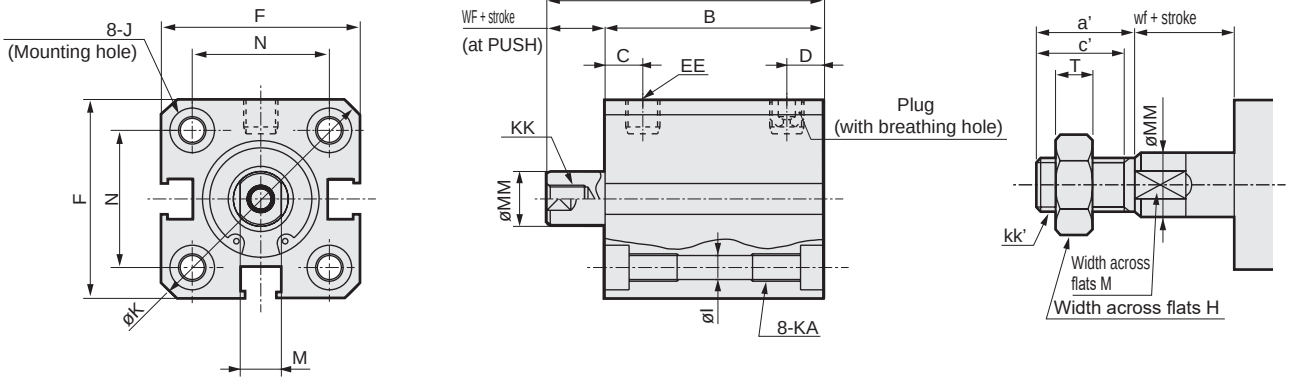

ø20/ø25

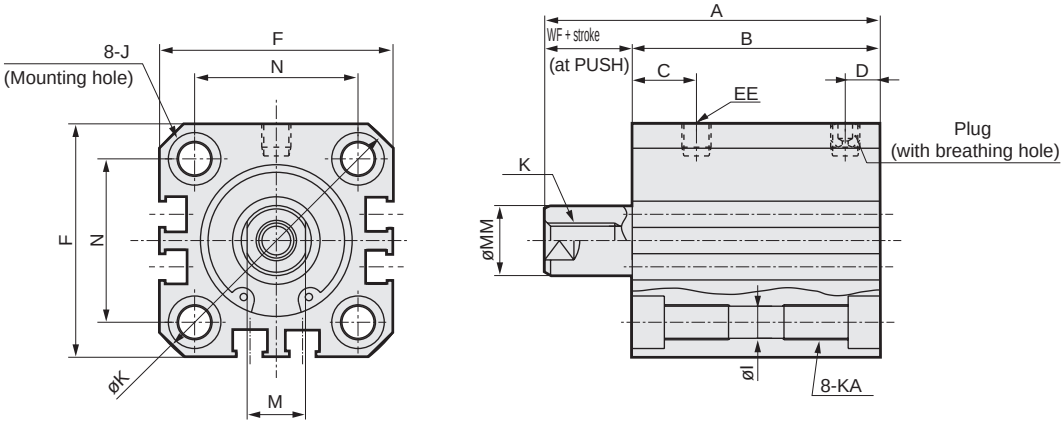

Code / Bore size (mm)			No switch A	B	C	D	EE	F	I	J	K	KA	KK	M	MM	N	WF
ø12	Stroke mm	5	30.5	22	5.5	5.5	M5	25	3.5	6.5 spot face depth 3.5	32	M4 depth 7	M3 depth 6	5	6	15.5	3.5
		10	40.5	27													
ø16	Stroke mm	5	30.5	22	5.5	5.5	M5	29	3.5	6.5 spot face depth 3.5	38	M4 depth 7	M4 depth 8	6	8	20	3.5
		10	40.5	27													
ø20	Stroke mm	5	34	24.5	8	5.5	M5	36	5.5	9 spot face depth 5.5	47	M6 depth 11	M5 depth 7	8	10	25.5	4.5
		10	44	29.5													
ø25	Stroke mm	5	37.5	27.5	11	6	M5	40	5.5	9 spot face depth 5.5	51	M6 depth 11	M6 depth 12	10	12	28	5
		10	47.5	32.5													

Dimensions of rod end male thread

Code / Bore size (mm)	a'	c'	H	kk'	M	MM	T	wf
ø 12	10.5	9	8	M5	5	6	3.2	3.5
ø 16	12	10	10	M6	6	8	3.6	3.5
ø 20	14	12	13	M8	8	10	5	4.5
ø 25	17.5	15	17	M10x1.25	10	12	6	5

*1: For dimensions of individual accessories, refer to pages 1108 to 1115.

Dimensions

● SSD-YL-32 to 50 (with switch)

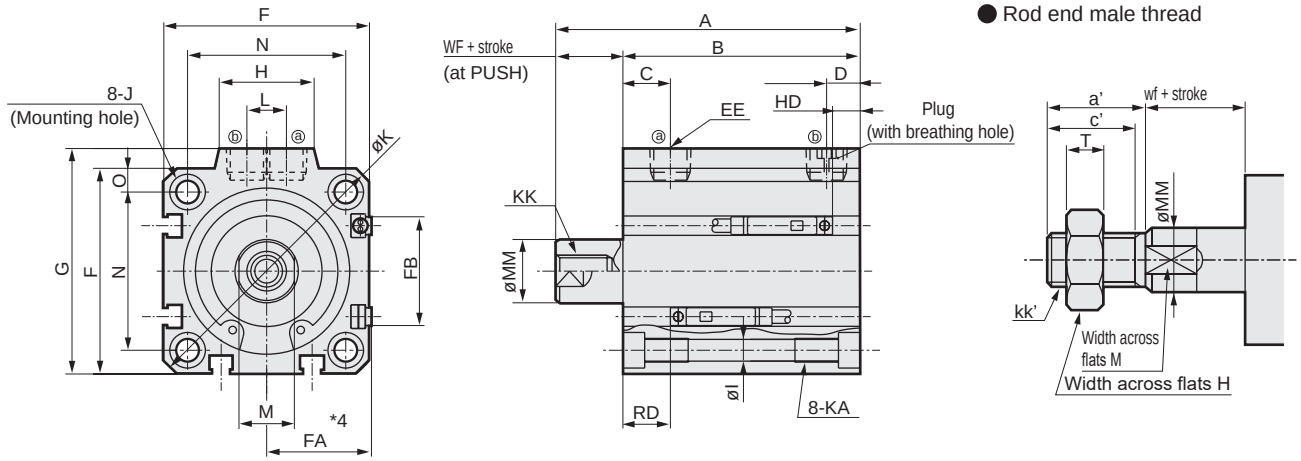

● SSD-Y-32 to 50 (without switch)

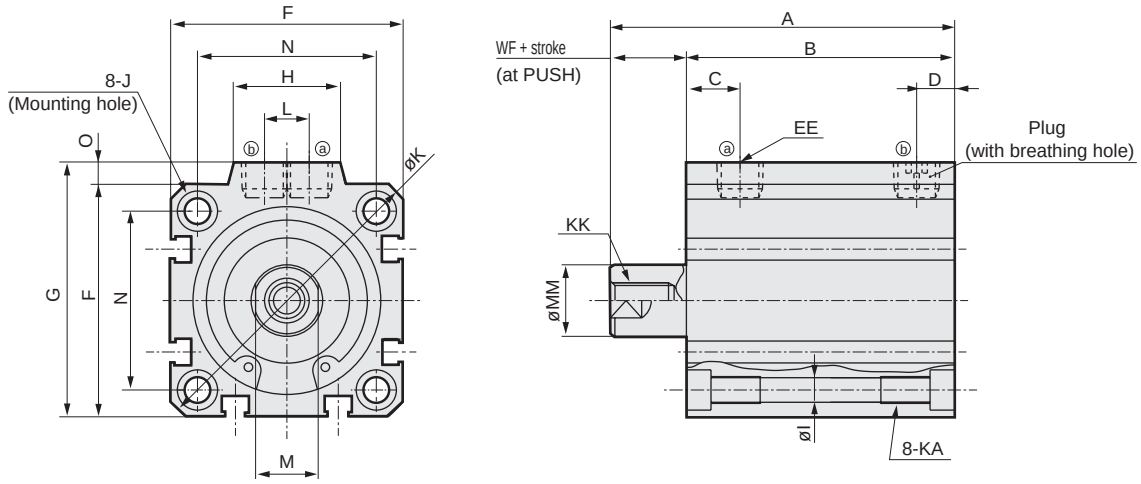

Code / Bore size (mm)			No switch A	No switch B	Common dimensions with switch A	B	C	D	EE	F	FA *4	FB	G	H	I	J	K	KA	KK	L	M	MM	N	O	WF
ø32	Stroke mm	5	40	28	50	38	8	8	Rc 1/8	45	23 (26.5)	20.5	49.5	24	5.5	9 spot face depth 5.5	60	M6 Depth 11	M8 Depth 13	10	14	16	34	4.5	7
		10	50	33	60	43																			
ø40	Stroke mm	10	56.5	39.5	66.5	49.5	12	8.5	Rc 1/8	52	26.5 (30)	27.5	57	24	5.5	9 spot face depth 5.5	69	M6 Depth 11	M8 Depth 13	10	14	16	40	5	7
		20	76.5	49.5	86.5	59.5																			
ø50	Stroke mm	10	58.5	40.5	68.5	50.5	10.5	10.5	Rc 1/4	64	32.5 (36)	28.5	71	33	6.9	11 spot face depth 6.5	86	M8 Depth 13	M10 Depth 15	15	17	20	50	7	8
		20	78.5	50.5	88.5	60.5																			

Dimensions of rod end male thread

Code / Bore size (mm)	a'	c'	H	kk'	M	MM	T	wf
ø 32	23.5	20.5	22	M14x1.5	14	16	8	5
ø 40	23.5	20.5	22	M14x1.5	14	16	8	5
ø 50	28.5	26	27	M18x1.5	17	20	11	5

Switch dimensions	Reed T0H/T0V, T5H/T5V		Proximity T2H/T2V, T3H/T3V T2WH/T2WV, T3WH/T3WV	
Bore size (mm)	HD *1	RD *1	HD *1	RD *1
ø32	3.5	9	3.5	9
ø40	7	12	7	12
ø50	7.5	12.5	7.5	12.5

- *1 : HD and RD dimensions for 5 mm stroke differ from these dimensions according to the setting.
- *2 : Refer to page 1313 for HD and RD dimensions of the 2-color LED, off-delay, AC magnetic field proof, T1* and T8* switches.
- *3 : Refer to page 1313 for the protruding dimensions of the 2-color LED, off-delay, AC magnetic field proof, T1* and T8* switches.
- *4 : Dimensions in ( ) of FA are for the L-shaped lead wire.
- *5 : For dimensions of individual accessories, refer to pages 1108 to 1115.

Note: Refer to pages 1320 to 1325 for dimensions including the accessories and pages 1108 to 1115 for dimensions of individual accessories.

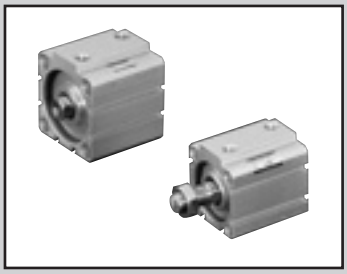

Compact cylinder double acting/heat resistant

SSD-T Series

● Bore size: ø12/ø16/ø20/ø25/ø32/ø40/ø50/ø63/ø83/ø100

JIS symbol

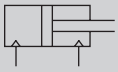

RoHS CAD

Specifications

Item	SSD-T									
Bore size mm	ø12	ø16	ø20	ø25	ø32	ø40	ø50	ø63	ø80	ø100
Actuation	Double acting									
Working fluid	Compressed air									
Max. working pressure MPa	1.0 (≈150 psi, 10 bar)									
Min. working pressure MPa	0.1 (≈15 psi, 1 bar)							0.05 (≈7.3 psi, 0.5 bar)		
Proof pressure MPa	1.6 (≈230 psi, 16 bar)									
Ambient temperature °C	5 (41°F) to 120 (248°F)									
Port size	M5				Rc 1/8		Rc 1/4		Rc 3/8	
Stroke tolerance mm	+1.0 0									
Working piston speed mm/s	50 to 500							50 to 300		
Cushion	None									
Lubrication *1	Not available									
Allowable absorbed energy J	0.004	0.01	0.016	0.021	0.025	0.092	0.1	0.12	0.27	0.56

*1: Periodically apply additional heat-resistant grease.

Stroke

Bore size (mm)	Standard stroke (mm)	Max. stroke (mm)	Min. stroke (mm)
ø12	5, 10, 15, 20, 25, 30	30	1
ø16			
ø20			
ø25	5, 10, 15, 20, 25, 30, 40, 50	50	
ø32			
ø40			
ø50			
ø63	5, 10, 20, 30, 40, 50	50	
ø80			
ø100			

*1) The custom stroke is available in 1 mm increments. However, the total length is the same as that of the next longer standard stroke.
*2) Refer to pages 1320 and 1321 for the min. stroke with mounting brackets LB and LB2.

(Unit: g)

Cylinder weight table

Stroke (mm) / Bore size (mm)	5	10	15	20	25	30	40	50
ø12	36	44	53	61	70	72	—	—
ø16	48	59	69	80	91	102	—	—
ø20	63	75	88	101	113	126	—	—
ø25	87	102	118	134	150	165	197	228
ø32	122	144	166	188	209	231	275	318
ø40	183	210	236	263	290	316	369	422
ø50	299	341	383	425	467	510	594	678
ø63	452	507	—	617	—	727	838	948
ø80	841	928	—	1101	—	1274	1448	1621
ø100	1319	1433	—	1660	—	1888	2115	2343

Theoretical thrust table

(Unit: N)

Bore size (mm)	Operating direction	Working pressure MPa											
		0.05	0.1	0.15	0.2	0.3	0.4	0.5	0.6	0.7	0.8	0.9	1.0
ø12	Push	-	11.3	17.0	22.6	33.9	45.2	56.5	67.9	79.2	90.5	$1.02x10^2$	$1.13x10^2$
	Pull	-	8.48	12.7	17.0	25.4	33.9	42.4	50.9	59.4	67.9	76.3	84.8
ø16	Push	-	20.1	30.2	40.2	60.3	80.4	$1.01x10^2$	$1.21x10^2$	$1.41x10^2$	$1.61x10^2$	$1.81x10^2$	$2.01x10^2$
	Pull	-	15.1	22.6	30.2	45.2	60.3	75.4	90.5	$1.06x10^2$	$1.21x10^2$	$1.36x10^2$	$1.51x10^2$
ø20	Push	-	31.4	47.1	62.8	94.2	$1.26x10^2$	$1.57x10^2$	$1.88x10^2$	$2.20x10^2$	$2.51x10^2$	$2.83x10^2$	$3.14x10^2$
	Pull	-	23.6	35.3	47.1	70.7	94.2	$1.18x10^2$	$1.41x10^2$	$1.65x10^2$	$1.88x10^2$	$2.12x10^2$	$2.36x10^2$
ø25	Push	-	49.1	73.6	98.2	$1.47x10^2$	$1.96x10^2$	$2.45x10^2$	$2.95x10^2$	$3.44x10^2$	$3.93x10^2$	$4.42x10^2$	$4.91x10^2$
	Pull	-	37.8	56.7	75.6	$1.13x10^2$	$1.51x10^2$	$1.89x10^2$	$2.27x10^2$	$2.64x10^2$	$3.02x10^2$	$3.40x10^2$	$3.78x10^2$
ø32	Push	-	80.4	$1.21x10^2$	$1.61x10^2$	$2.41x10^2$	$3.22x10^2$	$4.02x10^2$	$4.83x10^2$	$5.63x10^2$	$6.43x10^2$	$7.24x10^2$	$8.04x10^2$
	Pull	-	60.3	90.5	$1.21x10^2$	$1.81x10^2$	$2.41x10^2$	$3.02x10^2$	$3.62x10^2$	$4.22x10^2$	$4.83x10^2$	$5.43x10^2$	$6.03x10^2$
ø40	Push	-	$1.26x10^2$	$1.88x10^2$	$2.51x10^2$	$3.77x10^2$	$5.03x10^2$	$6.28x10^2$	$7.54x10^2$	$8.80x10^2$	$1.01x10^3$	$1.13x10^3$	$1.26x10^3$
	Pull	-	$1.06x10^2$	$1.58x10^2$	$2.11x10^2$	$3.17x10^2$	$4.22x10^2$	$5.28x10^2$	$6.33x10^2$	$7.39x10^2$	$8.44x10^2$	$9.50x10^2$	$1.06x10^3$
ø50	Push	-	$1.96x10^2$	$2.95x10^2$	$3.93x10^2$	$5.89x10^2$	$7.85x10^2$	$9.82x10^2$	$1.18x10^3$	$1.37x10^3$	$1.57x10^3$	$1.77x10^3$	$1.96x10^3$
	Pull	-	$1.65x10^2$	$2.47x10^2$	$3.30x10^2$	$4.95x10^2$	$6.60x10^2$	$8.25x10^2$	$9.90x10^2$	$1.15x10^3$	$1.32x10^3$	$1.48x10^3$	$1.65x10^3$
ø63	Push	$1.56x10^2$	$3.12x10^2$	$4.68x10^2$	$6.23x10^2$	$9.35x10^2$	$1.25x10^3$	$1.56x10^3$	$1.87x10^3$	$2.18x10^3$	$2.49x10^3$	$2.81x10^3$	$3.12x10^3$
	Pull	$1.40x10^2$	$2.80x10^2$	$4.20x10^2$	$5.61x10^2$	$8.41x10^2$	$1.12x10^3$	$1.40x10^3$	$1.68x10^3$	$1.96x10^3$	$2.24x10^3$	$2.52x10^3$	$2.80x10^3$
ø80	Push	$2.51x10^2$	$5.03x10^2$	$7.54x10^2$	$1.01x10^3$	$1.51x10^3$	$2.01x10^3$	$2.51x10^3$	$3.02x10^3$	$3.52x10^3$	$4.02x10^3$	$4.52x10^3$	$5.03x10^3$
	Pull	$2.27x10^2$	$4.54x10^2$	$6.80x10^2$	$9.07x10^2$	$1.36x10^3$	$1.81x10^3$	$2.27x10^3$	$2.72x10^3$	$3.17x10^3$	$3.63x10^3$	$4.08x10^3$	$4.54x10^3$
ø100	Push	$3.93x10^2$	$7.85x10^2$	$1.18x10^3$	$1.57x10^3$	$2.36x10^3$	$3.14x10^3$	$3.93x10^3$	$4.71x10^3$	$5.50x10^3$	$6.28x10^3$	$7.07x10^3$	$7.85x10^3$
	Pull	$3.57x10^2$	$7.15x10^2$	$1.07x10^3$	$1.43x10^3$	$2.14x10^3$	$2.86x10^3$	$3.57x10^3$	$4.29x10^3$	$5.00x10^3$	$5.72x10^3$	$6.43x10^3$	$7.15x10^3$

SCP*3
CMK2
CMA2
SCM
SCG
SCA2
SCS2
CKV2
CAV2/COVP/N2
SSD2
SSG
SSD
CAT
MDC2
MVC
SMG
MSD/MSDG
FC*
STK
SRL3
SRG3
SRM3
SRT3
MRL2
MRG2
SM-25
ShkAbs
FJ
FK
Spd Contr
Ending

How to order

SSD-T - 12 ( ) - 5 - N - LB - I

- Ⓐ Bore size
- Ⓑ Port thread
- Ⓒ Stroke
- Ⓓ Option *1
- Ⓔ Mounting bracket *2 *3
- Ⓕ Accessory *4

Code	Description
Ⓐ Bore size (mm)	
12	ø12
16	ø16
20	ø20
25	ø25
32	ø32
40	ø40
50	ø50
63	ø63
80	ø80
100	ø100
Ⓑ Port thread	
Blank	Rc thread
NN	NPT thread (ø32 and over) (made-to-order product)
GN	G thread (ø32 and over) (made-to-order product)
Ⓒ Stroke (mm)	
Refer to the stroke table below.	
Ⓓ Option	
Blank	Rod end female thread
N	Rod end male thread
M	Piston rod material (stainless steel)
Ⓔ Mounting bracket	
LB	Axial foot
LB2	Axial foot (compact)
CB	Clevis bracket (pin and snap ring included)
CB2	Clevis bracket (compact) (pin and snap ring included)
FA	Rod side flange
FB	Head side flange
Ⓕ Accessory (available when rod end male thread "N" is selected)	
I	Rod eye
I2	Rod eye (compact)
Y	Rod clevis (pin and snap ring included)
Y2	Rod clevis (compact) (pin and snap ring included)

⚠ Precautions for model No. selection

*1 : Piston rod of ø12 to ø25 is stainless steel as standard. C-snap ring is stainless steel instead of steel. The rod end male thread nut is stainless steel.
*2 : The mounting bracket is included at shipment.
*3 : The projection dimension of piston rod WF when LB2 or FA is selected is different from that of the standard. Refer to the dimensions on pages 1109 and 1110. The number of the specified protruding dimension will be added at the end of the model No. printed on the metal plate on the body.
*4 : "I" and "Y" cannot be selected together.
*5 : Refer to Ending Page 85 for custom specifications of rod end form.
*6 : Refer to pages 1086 and 1087 for combinations of variations/options.

[Example of model No.]

SSD-T-12-5-N

Model: Compact cylinder, heat resistance

- Ⓐ Bore size : ø12 mm
- Ⓑ Port thread : Rc thread
- Ⓒ Stroke : 5 mm
- Ⓓ Option : Rod end male thread

(Stroke table)

Stroke (mm)		Applicable bore size									
		ø12	ø16	ø20	ø25	ø32	ø40	ø50	ø63	ø80	ø100
Standard stroke	5	●	●	●	●	●	●	●	●	●	●
	10	●	●	●	●	●	●	●	●	●	●
	15	●	●	●	●	●	●	●			
	20	●	●	●	●	●	●	●	●	●	●
	25	●	●	●	●	●	●	●			
	30	●	●	●	●	●	●	●	●	●	●
	40				●	●	●	●	●	●	●
	50				●	●	●	●	●	●	●
Min. stroke (mm)		1									
Max. stroke (mm)		30			50						
Custom stroke *1		In 1 mm increments									

*1 : The total length is the same as that of the next longer standard stroke.
*2 : Refer to pages 1320 and 1321 for the min. stroke with mounting brackets LB and LB2.

How to order mounting bracket

Bore size (mm) / Mounting bracket	ø12	ø16	ø20	ø25	ø32	ø40	ø50	ø63	ø80	ø100
Foot (LB)	SSD-LB-12	SSD-LB-16	SSD-LB-20	SSD-LB-25	SSD-LB-32	SSD-LB-40	SSD-LB-50	SSD-LB-63	SSD-LB-80	SSD-LB-100
Foot (LB2)	SSD-LB2-12	SSD-LB2-16	SSD-LB2-20	SSD-LB2-25	SSD-LB2-32	SSD-LB2-40	SSD-LB2-50	SSD-LB2-63	SSD-LB2-80	SSD-LB2-100
Flange (FA/FB)	SSD-FA-12	SSD-FA-16	SSD-FA-20	SSD-FA-25	SSD-FA-32	SSD-FA-40	SSD-FA-50	SSD-FA-63	SSD-FA-80	SSD-FA-100
Clevis bracket (CB)	SSD-CB-12	SSD-CB-16	SSD-CB-20	SSD-CB-25	SSD-CB-32	SSD-CB-40	SSD-CB-50	SSD-CB-63	SSD-CB-80	SSD-CB-100
Clevis bracket (CB2)	SSD-CB2-12	SSD-CB2-16	SSD-CB2-20	SSD-CB2-25	SSD-CB2-32	SSD-CB2-40	SSD-CB2-50	SSD-CB2-63	SSD-CB2-80	SSD-CB2-100

*1: The foot mounting bracket is provided as 2 pcs./set.

Internal structure and parts list

● SSD-T-12 to 25

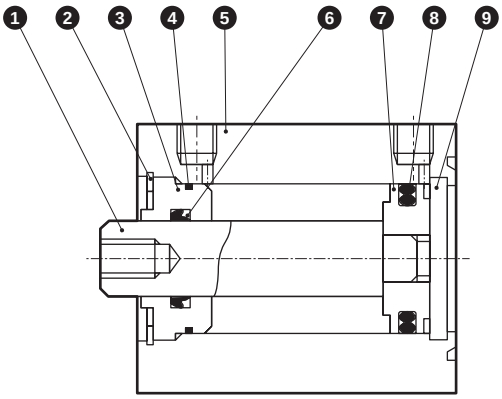

● SSD-T-32 to 50

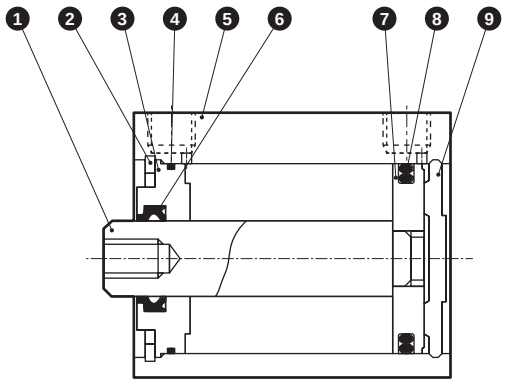

● SSD-T-63 to 100

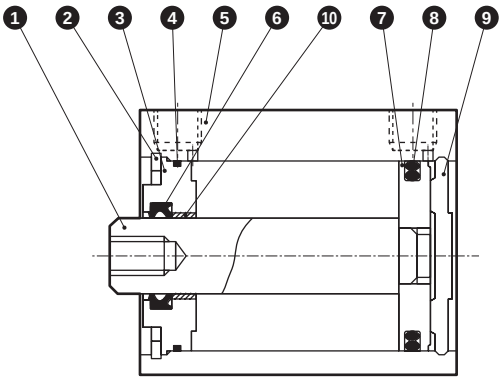

No.	Part name	Material	Remarks
1	Piston rod	ø12 to ø25: Stainless steel ø32 to ø100: Steel	ø16 to ø100: Industrial chrome plating
2	C-snap ring	Steel	Zinc phosphate
3	Rod metal	ø12 to ø50: Special aluminum ø63 to ø100: Aluminum alloy	Alumite
4	Rod metal gasket	Fluoro rubber	
5	Body	Aluminum alloy	Hard alumite
6	Rod packing	Fluoro rubber	

No.	Part name	Material	Remarks
7	Piston	ø12 to ø25: Aluminum alloy ø32 to ø100: Stainless steel	ø12 to 25: Chromate
8	Piston packing	Fluoro rubber	
9	Cover	ø12 to ø25: Stainless steel ø32 to ø100: Aluminum alloy	ø32 to ø100: Alumite
10	Bush	Oiles drymet	ø63 to ø100

Fluorine grease is used.

Repair parts list

Bore size (mm)	Kit No.	Repair parts No.
ø12	SSD-T-12K	❹ ❻ ❽
ø16	SSD-T-16K	
ø20	SSD-T-20K	
ø25	SSD-T-25K	
ø32	SSD-T-32K	
ø40	SSD-T-40K	
ø50	SSD-T-50K	
ø63	SSD-T-63K	
ø80	SSD-T-80K	
ø100	SSD-T-100K	

Dimensions

Same as double acting/single rod. Refer to pages 1103 to 1105.

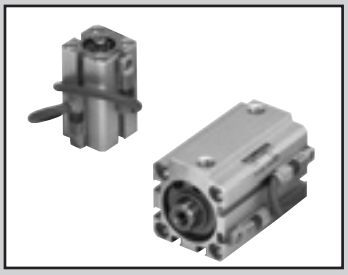

Compact cylinder double acting/with heat resistant cylinder switch

SSD-T1L Series

● Bore size: ø16/ø20/ø25/ø32/ø40/ø50/ø63

JIS symbol

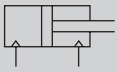

RoHS CAD

Specifications

1 MPa = 10 bar

Item	SSD-T1L						
Bore size mm	ø16	ø20	ø25	ø32	ø40	ø50	ø63
Actuation	Double acting						
Working fluid	Compressed air						
Max. working pressure MPa	1.0 (≈150 psi, 10 bar)						
Min. working pressure MPa	0.1 (≈15 psi, 1 bar)						0.05 (≈7.3 psi)
Proof pressure MPa	1.6 (≈230 psi, 16 bar)						
Ambient temperature °C	5 (41°F) to 150 (302°F) (*1)						
Port size	M5			Rc1/8		Rc1/4	
Stroke tolerance mm	+1.0 0						
Working piston speed mm/s	50 to 500						50 to 300
Cushion	None						
Lubrication (*2)	-						

*1: At an ambient temperature of 150°C, external leakage will occur gradually after approximately 500,000 uses.
*2: Periodically apply additional heat-resistant grease.

Stroke

Bore size (mm)	Standard stroke (mm)	Max. stroke (mm)	Min. stroke (mm)		
			With 1 switch	With 2 switches	With 3 switches
ø16	10/15/20/25/30	30	10	20	-
ø20	15/20/25/30		15	25	-
ø25	15/20/25/30/40/50	50		20	40
ø32	10/15/20/25/30/40/50		10		
ø40					
ø50					
ø63	10/20/30/40/50				

Note: The custom stroke is available in 1 mm increments. However, the total length is the same as that of the next longer standard stroke.

Cylinder switch specifications

Item	2-wire reed	
	ET0H, ET0V	
Applications	For relay, programmable controller	
Load voltage	12/24 VDC	110 VAC
Load current	5 to 50 mA	7 to 20 mA
Internal voltage drop	3.0 V or less	
Leakage current	0 mA	
Indicator	LED lit when ON (Note)	
Lead wire	Heat-resist fluorine-insulated sheathed wire 1 m (0.5 SQ (100/0.08) annealed copper wire x 2C)	
Insulation resistance	100 MΩ and over with 500 VDC megger	
Withstand voltage	No failure after 1 minute of 1,000 VAC application.	
Shock resistance	294 m/s²	
Ambient temperature	-10 to 150°C	
Degree of protection	IEC standards IP67, JIS C0920 (water tight type)	
Weight g	44	

Note: Indicator uses LED.
Visibility will gradually decrease with continuous use under high temperatures. As the LED lamp circuit is separated from the switch output circuit, the switch output works normally even if the LED lamp turns OFF.

Cylinder weight table (the weight of the switches is when there are 2 cylinder switches.)

(Unit: g)

Stroke (mm) / Bore size (mm)	10	15	20	25	30	40	50
ø16	124	134	145	156	167	-	-
ø20	170	183	196	208	221	-	-
ø25	213	229	245	261	276	308	339
ø32	278	300	322	343	365	409	452
ø40	373	399	426	453	479	532	585
ø50	555	597	639	681	724	808	892
ø63	806	-	916	-	1026	1137	1247

Theoretical thrust table

(Unit: N)

Bore size (mm)	Operating direction	Working pressure MPa											
		0.05	0.1	0.15	0.2	0.3	0.4	0.5	0.6	0.7	0.8	0.9	1.0
ø16	Push	-	20.1	30.2	40.2	60.3	80.4	$1.01x10^2$	$1.21x10^2$	$1.41x10^2$	$1.61x10^2$	$1.81x10^2$	$2.01x10^2$
	Pull	-	15.1	22.6	30.2	45.2	60.3	75.4	90.5	$1.06x10^2$	$1.21x10^2$	$1.36x10^2$	$1.51x10^2$
ø20	Push	-	31.4	47.1	62.8	94.2	$1.26x10^2$	$1.57x10^2$	$1.88x10^2$	$2.20x10^2$	$2.51x10^2$	$2.83x10^2$	$3.14x10^2$
	Pull	-	23.6	35.3	47.1	70.7	94.2	$1.18x10^2$	$1.41x10^2$	$1.65x10^2$	$1.88x10^2$	$2.12x10^2$	$2.36x10^2$
ø25	Push	-	49.1	73.6	98.2	$1.47x10^2$	$1.96x10^2$	$2.45x10^2$	$2.95x10^2$	$3.44x10^2$	$3.93x10^2$	$4.42x10^2$	$4.91x10^2$
	Pull	-	37.8	56.7	75.6	$1.13x10^2$	$1.51x10^2$	$1.89x10^2$	$2.27x10^2$	$2.64x10^2$	$3.02x10^2$	$3.40x10^2$	$3.78x10^2$
ø32	Push	-	80.4	$1.21x10^2$	$1.61x10^2$	$2.41x10^2$	$3.22x10^2$	$4.02x10^2$	$4.83x10^2$	$5.63x10^2$	$6.43x10^2$	$7.24x10^2$	$8.04x10^2$
	Pull	-	60.3	90.5	$1.21x10^2$	$1.81x10^2$	$2.41x10^2$	$3.02x10^2$	$3.62x10^2$	$4.22x10^2$	$4.83x10^2$	$5.43x10^2$	$6.03x10^2$
ø40	Push	-	$1.26x10^2$	$1.88x10^2$	$2.51x10^2$	$3.77x10^2$	$5.03x10^2$	$6.28x10^2$	$7.54x10^2$	$8.80x10^2$	$1.01x10^3$	$1.13x10^3$	$1.26x10^3$
	Pull	-	$1.06x10^2$	$1.58x10^2$	$2.11x10^2$	$3.17x10^2$	$4.22x10^2$	$5.28x10^2$	$6.33x10^2$	$7.39x10^2$	$8.44x10^2$	$9.50x10^2$	$1.06x10^3$
ø50	Push	-	$1.96x10^2$	$2.95x10^2$	$3.93x10^2$	$5.89x10^2$	$7.85x10^2$	$9.82x10^2$	$1.18x10^3$	$1.37x10^3$	$1.57x10^3$	$1.77x10^3$	$1.96x10^3$
	Pull	-	$1.65x10^2$	$2.47x10^2$	$3.30x10^2$	$4.95x10^2$	$6.60x10^2$	$8.25x10^2$	$9.90x10^2$	$1.15x10^3$	$1.32x10^3$	$1.48x10^3$	$1.65x10^3$
ø63	Push	$1.56x10^2$	$3.12x10^2$	$4.68x10^2$	$6.23x10^2$	$9.35x10^2$	$1.25x10^3$	$1.56x10^3$	$1.87x10^3$	$2.18x10^3$	$2.49x10^3$	$2.81x10^3$	$3.12x10^3$
	Pull	$1.40x10^2$	$2.80x10^2$	$4.20x10^2$	$5.61x10^2$	$8.41x10^2$	$1.12x10^3$	$1.40x10^3$	$1.68x10^3$	$1.96x10^3$	$2.24x10^3$	$2.52x10^3$	$2.80x10^3$

SCP*3
CMK2
CMA2
SCM
SCG
SCA2
SCS2
CKV2
CAV2/COVP/N2
SSD2
SSG
SSD
CAT
MDC2
MVC
SMG
MSD/MSDG
FC*
STK
SRL3
SRG3
SRM3
SRT3
MRL2
MRG2
SM-25
ShkAbs
FJ
FK
Spd Contr
Ending

How to order

SSD-T1L - 16 ( ) - 10 - ET0H - D - N - LB - I

- SSD-T1L: Double acting/heat resistant with compact heat resistant switch
- Ⓐ Bore size
- Ⓑ Port thread
- Ⓒ Stroke
- Ⓓ Switch model No. *7
- Ⓔ Switch quantity
- Ⓕ Option *1
- Ⓖ Mounting bracket *2 *3
- Ⓗ Accessory *4

Code	Description
Ⓐ Bore size (mm)	
16	ø16
20	ø20
25	ø25
32	ø32
40	ø40
50	ø50
63	ø63
Ⓑ Port thread	
Blank	Rc thread
NN	NPT thread (ø32 and over) (made-to-order product)
GN	G thread (ø32 and over) (made-to-order product)
Ⓒ Stroke (mm)	
Refer to the stroke table on the following page.	

Ⓓ Switch model No.				
ET0H	Reed	DC/AC	2-wire	Axial lead wire
ET0V				L-shaped lead wire

Ⓔ Switch quantity	
R	1 on rod side
H	1 on head side
D	2
Ⓕ Option	
Blank	Rod end female thread
N	Rod end male thread
M	Piston rod material (stainless steel)
Ⓖ Mounting bracket	
LB	Axial foot
LB2	Axial foot (compact)
CB	Clevis bracket (pin and snap ring included)
CB2	Clevis bracket (compact) (pin and snap ring included)
FA	Rod side flange
FB	Head side flange
Ⓗ Accessory (available when rod end male thread "N" is selected)	
I	Rod eye
I2	Rod eye (compact)
Y	Rod clevis (pin and snap ring included)
Y2	Rod clevis (compact) (pin and snap ring included)

⚠ Precautions for model No. selection

*1 : Piston rod of ø12 to ø25 is stainless steel as standard. C-snap ring is stainless steel instead of steel. The rod end male thread nut is stainless steel.
*2 : The mounting bracket is included at shipment.
*3 : The projection dimension of piston rod WF when LB2 or FA is selected is different from that of the standard. Refer to the dimensions on pages 1109 and 1110. The number of the specified protruding dimension will be added at the end of the model No. printed on the metal plate on the body.
*4 : "I" and "Y" cannot be selected together.
*5 : Refer to Ending Page 85 for custom specifications of rod end form.
*6 : Refer to pages 1086 and 1087 for combinations of variations/options.
*7 : Switches are shipped with the product. Contact CKD if assembling before shipment is necessary.

[Example of model No.]

SSD-T1L-16-10-ET0H-D-N

Model: Compact cylinder
With heat resistant cylinder switch

Ⓐ Bore size : ø16
Ⓑ Port thread : Rc thread
Ⓒ Stroke :10 mm
Ⓓ Switch model No. : Reed switch ETOH, lead wire length 1 m
Ⓔ Switch quantity : 2
Ⓕ Option : Rod end male thread

[Stroke table]

Stroke (mm)		Applicable bore size						
		ø16	ø20	ø25	ø32	ø40	ø50	ø63
Standard stroke	10	●			●	●	●	●
	15	●	●	●	●	●	●	
	20	●	●	●	●	●	●	●
	25	●	●	●	●	●	●	
	30	●	●	●	●	●	●	●
	40			●	●	●	●	●
	50			●	●	●	●	●
Min. stroke (mm) *1		10(20)	15(25)	15(20)	10(20)			
Max. stroke (mm)		30		50				
Custom stroke (mm) *2		In 1 mm increments						

*1 : The value in ( ) is for types with two switches.
Refer to page 1142 for the number of installed switches and the min. stroke.
*2 : The total length is the same as that of the next longer standard stroke.

How to order switch

SW - ET0H

Switch model No.
(Item Ⓓ on page 1144)

How to order mounting bracket

Bore size (mm) / Mounting bracket	ø16	ø20	ø25	ø32	ø40	ø50	ø63
Foot (LB)	SSD-LB-16	SSD-LB-20	SSD-LB-25	SSD-LB-32	SSD-LB-40	SSD-LB-50	SSD-LB-63
Foot (LB2)	SSD-LB2-16	SSD-LB2-20	SSD-LB2-25	SSD-LB2-32	SSD-LB2-40	SSD-LB2-50	SSD-LB2-63
Flange (FA/FB)	SSD-FA-16	SSD-FA-20	SSD-FA-25	SSD-FA-32	SSD-FA-40	SSD-FA-50	SSD-FA-63
Clevis bracket (CB)	SSD-CB-16	SSD-CB-20	SSD-CB-25	SSD-CB-32	SSD-CB-40	SSD-CB-50	SSD-CB-63
Clevis bracket (CB2)	SSD-CB2-16	SSD-CB2-20	SSD-CB2-25	SSD-CB2-32	SSD-CB2-40	SSD-CB2-50	SSD-CB2-63

*1: The foot mounting bracket is provided as 2 pcs./set.

Internal structure and parts list (ø16 to ø32)

● SSD-T1L-16

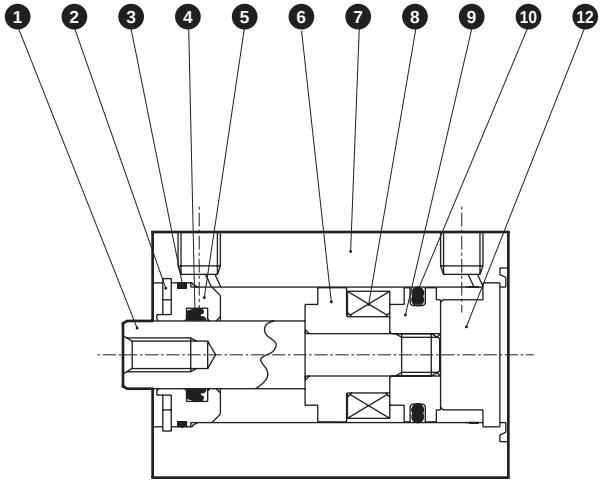

● SSD-T1L-20/25

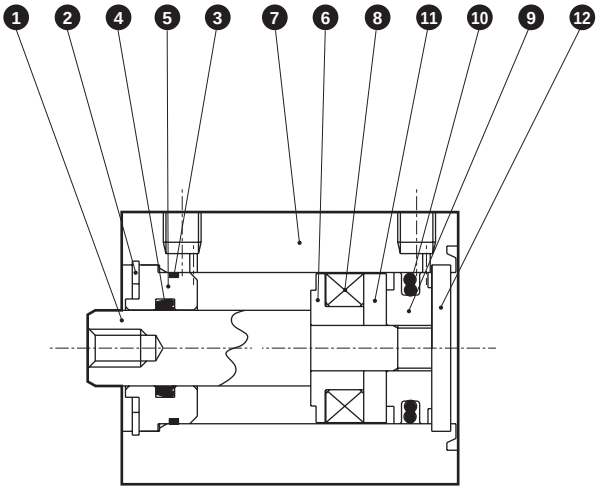

● SSD-T1L-32

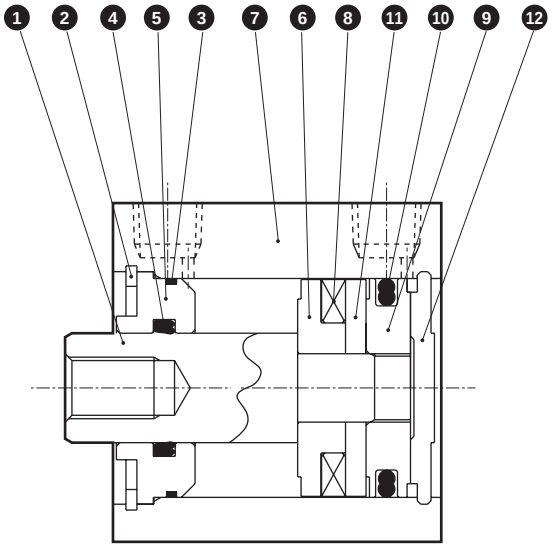

No.	Part name	Material	Remarks	No.	Part name	Material	Remarks
1	Piston rod	ø16 to ø25: Stainless steel ø32: Steel	Industrial chrome plating	8	Magnet	Special alloy	
2	C-snap ring	Steel	Zinc phosphate	9	Piston	ø16 to ø25: Aluminum alloy ø32: Stainless steel	ø16 to ø25: Chromate
3	Rod metal gasket	Fluoro rubber		10	Piston packing	Fluoro rubber	
4	Rod packing	Fluoro rubber		11	Spacer	Aluminum alloy	Chromate
5	Rod metal	Special aluminum	Alumite	12	Cover	ø16 to ø25: Stainless steel ø32: Aluminum alloy	ø32: Alumite
6	Spacer (for magnet)	Aluminum alloy	Chromate				
7	Cylinder body	Aluminum alloy	Hard alumite				

Fluorine grease is used.

Repair parts list (ø16 to ø32)

Bore size (mm)	Kit No.	Repair parts No.
ø16	SSD-T-16K	❸ ❹ ❿
ø20	SSD-T-20K	
ø25	SSD-T-25K	
ø32	SSD-T-32K	

Internal structure and parts list (ø40 to ø63)

● SSD-T1L-40/50

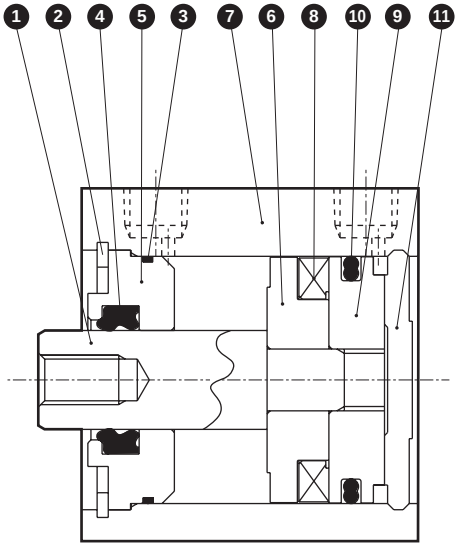

● SSD-T1L-63

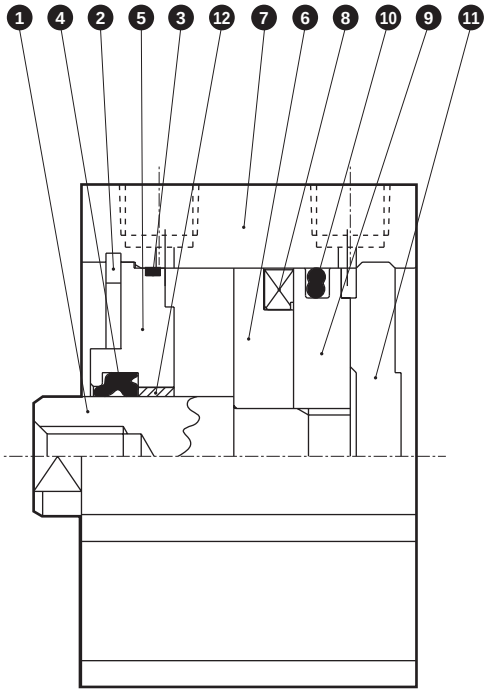

No.	Part name	Material	Remarks	No.	Part name	Material	Remarks
1	Piston rod	Steel	Industrial chrome plating	7	Cylinder body	Aluminum alloy	Hard alumite
2	C-snap ring	Steel	Zinc phosphate	8	Magnet	Plastic	
3	Rod metal gasket	Fluoro rubber		9	Piston	Stainless steel	
4	Rod packing	Fluoro rubber		10	Piston packing	Fluoro rubber	
5	Rod metal	ø40, ø50: Special aluminum ø63: Aluminum alloy	Chromate	11	Cover	Aluminum alloy	Alumite
				12	Bush	Oiles drymet	
6	Spacer (for magnet)	Aluminum alloy	Chromate				

Fluorine grease is used.

Repair parts list (ø40 to ø63)

Bore size (mm)	Kit No.	Repair parts No.
ø40	SSD-T-40K	❸ ❹ ❿
ø50	SSD-T-50K	
ø63	SSD-T-63K	

Dimensions (ø16 to ø25)

● SSD-T1L-16

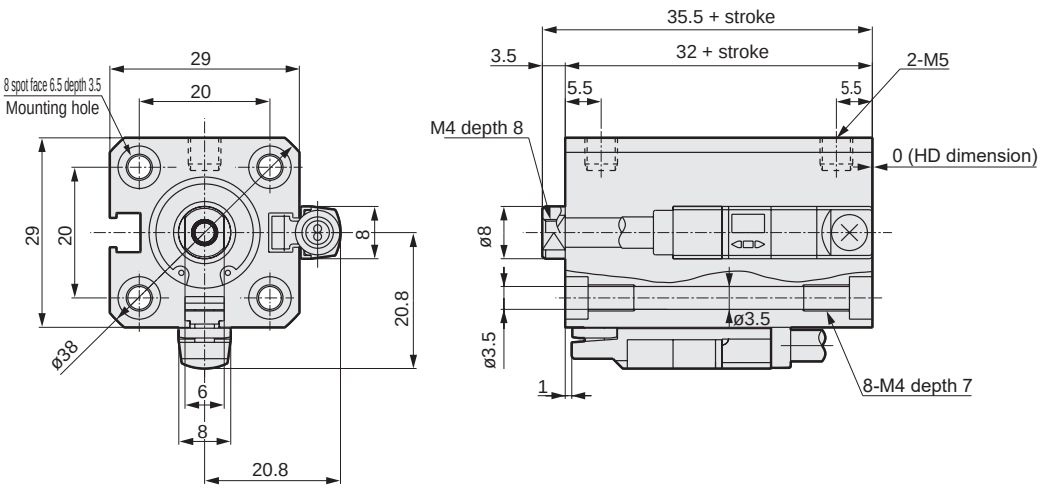

● Rod end male thread

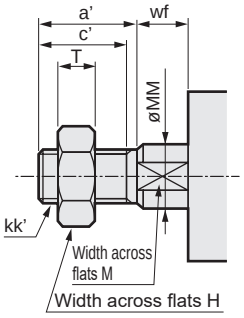

● SSD-T1L-20/25

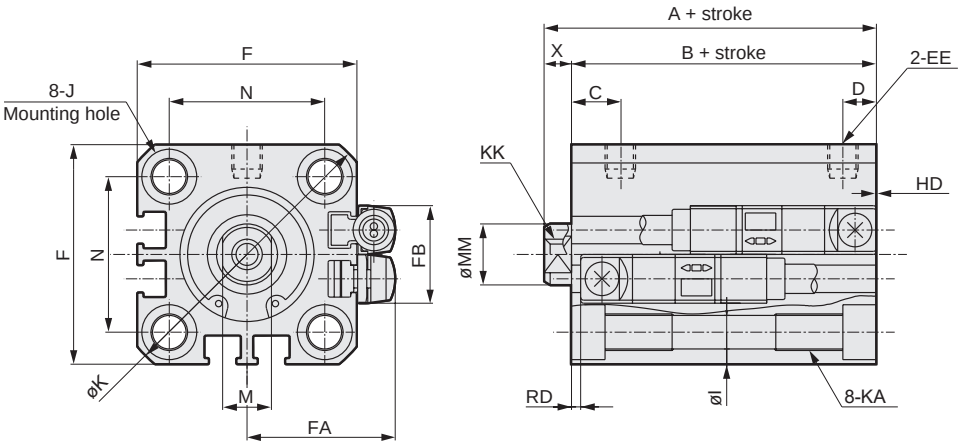

Code / Bore size	Basic dimensions A (*1)	B (*1)	C	D	EE	F	FA	FB	G	H	I	J	K	KA	KK
ø20	34	29.5	8	5.5	M5	36	24.3	16	-	-	5.5	Spot face 9 depth 5.5	47	M6 depth 11	M5 depth 7
ø25	37.5	32.5	11	6	M5	40	26.3	17	-	-	5.5	Spot face 9 depth 5.5	51	M6 depth 11	M6 depth 12

Code / Bore size	Basic dimensions L	M	MM	N	O	X	Dimensions with switch reed ET0H/ET0V HD	RD
ø20	-	8	10	25.5	-	4.5	0	0
ø25	-	10	12	28	-	5	0.5	1.0

*1 : To calculate A+ stroke or B+ stroke when using custom stroke, apply the next alonger standard stroke (instead of the custom stroke) to the stroke value.
(Example) If the custom stroke is 7 mm, apply the standard stroke of 10 mm.

*2 : Due to heat resistance magnet production circumstances, the total length of ø16 type will be longer than that of ø20 type. Please be careful.

*3 : For dimensions of individual accessories, refer to pages 1108 to 1115.

Dimensions of rod end male thread

Code / Bore size (mm)	a'	c'	H	kk'	M	MM	T	wf
ø16	12	10	10	M6	6	8	3.6	3.5
ø20	14	12	13	M8	8	10	5	4.5
ø25	17.5	15	17	M10X1.25	10	12	6	5

Dimensions (ø32 to ø63)

● Rod end male thread

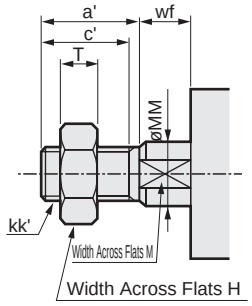

● SSD-T1L-32 to 63

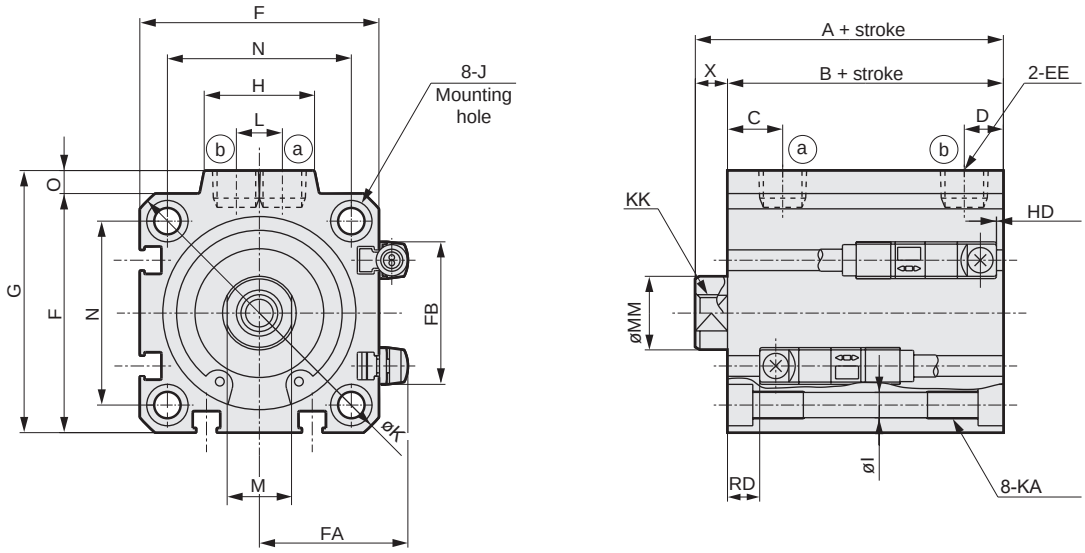

Code / Bore size	Basic dimensions A (*1)	B (*1)	C	D	EE	F	FA	FB	G	H	I	J	K	KA	KK
ø32	40	33	8	8	Rc1/8	45	28.8	24	49.5	24	5.5	Spot face 9 depth 5.5	60	M6 depth 11	M8 depth 13
ø40	46.5	39.5	12	8.5	Rc1/8	52	32.3	31	57	24	5.5	Spot face 9 depth 5.5	69	M6 depth 11	M8 depth 13
ø50	48.5	40.5	10.5	10.5	Rc1/4	64	38.3	32	71	33	6.9	Spot face 11 depth 6.5	86	M8 depth 13	M10 depth 15
ø63	54	46	13	11	Rc1/4	77	44.8	32	84	33	8.7	Spot face 14 depth 9	103	M10 depth 25	M10 depth 15

Code / Bore size	Basic dimensions L	M	MM	N	O	X	Dimensions with switch reed ET0H/ET0V HD	RD
ø32	10	14	16	34	4.5	7	0.5	2.0
ø40	10	14	16	40	5	7	1.5	7.0
ø50	15	17	20	50	7	8	1.5	6.0
ø63	15	17	20	60	7	8	5.5	5.5

*1:To calculate A+ stroke or B+ stroke when using custom stroke, apply the next longer standard stroke (instead of the custom stroke) to the stroke value. (Example) If the custom stroke is 7 mm, apply the standard stroke of 10 mm.

Dimensions of rod end male thread

Code / Bore size (mm)	a'	c'	H	kk'	M	MM	T	wf
ø32	23.5	20.5	22	M14X1.5	14	16	8	5
ø40	23.5	20.5	22	M14X1.5	14	16	8	5
ø50	28.5	26	27	M18X1.5	17	20	11	5
ø63	28.5	26	27	M18X1.5	17	20	11	5

For dimensions of individual accessories, refer to pages 1108 to 1115.

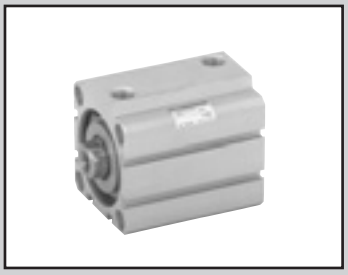

Compact cylinder high load/rubber-air cushioned

SSD-K-*C Series

● Bore size: ø20/ø25/ø32/ø40/ø50/ø63/ø80/ø100

JIS symbol

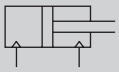

RoHS CAD

Specifications

Item	SSD-K-*C, SSD-KL-*C (with switch)							
Bore size mm	ø20	ø25	ø32	ø40	ø50	ø63	ø80	ø100
Actuation	Double acting							
Working fluid	Compressed air							
Max. working pressure MPa	1.0 (≈150 psi, 10 bar)							
Min. working pressure MPa	0.25 (≈36 psi, 2.5 bar)		0.2 (≈29 psi, 2 bar)					
Proof pressure MPa	1.6 (≈230 psi, 16 bar)							
Ambient temperature °C	-10 (14°F) to 60 (140°F) (no freezing)							
Port size	Rc 1/8				Rc 1/4		Rc 3/8	
Stroke tolerance mm	+2.0 0							
Working piston speed mm/s	50 to 500					50 to 300		
Cushion	Rubber-air cushion							
Lubrication	Not required (use turbine oil ISO VG32 if necessary for lubrication)							
Allowable absorbed energy J	0.16	0.16	0.40	0.63	0.98	1.56	2.51	3.92

Stroke

Bore size (mm)	Standard stroke (mm)	Max. stroke (mm)	Min. stroke (mm)
ø20	5, 10, 15, 20, 25, 30, 40, 50	200	5 mm(ø20 to ø50) 10 mm(ø63 to ø100)
ø25	10, 15, 20, 25, 30, 40, 50, 60, 70, 80, 90, 100	300	
ø32			
ø40			
ø50			
ø63	10, 20, 30, 40, 50, 60, 70, 80, 90, 100		
ø80			
ø100			

*1 : The custom stroke is available in 1 mm increments. However, the total length is the same as that of the next longer standard stroke.
*2 : When using the type with switch, refer to the table below.
*3 : Refer to pages 1320 and 1321 for the min. stroke with mounting brackets LB and LB2.

Number of installed switches and min. stroke (mm)

Switch quantity	1	2	3	4	5
Switch model No. / Bore size (mm)	T*	T*	T*	T*	T*
ø20	5	5	35	50	65
ø25	5	5	35	50	65
ø32	5	5	35	50	65
ø40	5	5	35	50	65
ø50	5	5	35	50	65
ø63	10	10	35	50	65
ø80	10	10	35	50	65
ø100	10	10	35	50	65

1: Less than 10 mm is not available for 2-color LED, off-delay, strong magnetic field proof, or with T1 or T8* switch.

Rubber-air cushion mechanism

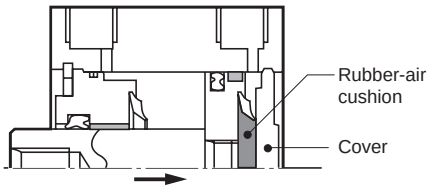

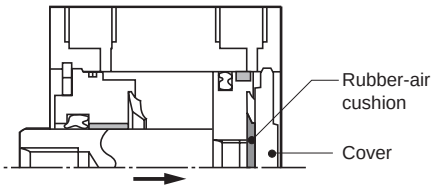

Cylinder with rubber cushion
Cylinder with rubber-air cushion

Data of the reduction of collision noise level (an example case)

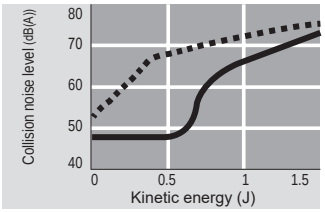

Data of the reduction of collision acceleration level (an example case)

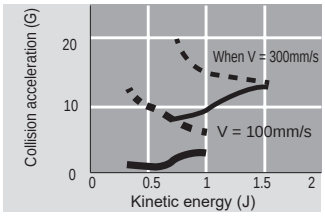

When pulled

An airtight space is created in the ■ area when the piston operates and the rubber-air cushion and cover make contact. Air in the airtight area is further compressed, absorbing energy as the piston operates. At the end of the stroke, energy generated by compression distortion of the rubber cushion is also added.

Switch specifications

● 1-color/2-color LED/for AC magnetic field proof

Item	2-wire proximity				3-wire proximity				2-wire reed							2-wire proximity
	T1H/ T1V	T2H/T2V/ T2JH/T2JV	T2YH/ T2YV	T2WH/ T2WV	T3H/ T3V	T3PH/ T3PV	T3YH/ T3YV	T3WH/ T3WV	T0H/T0V		T5H/T5V		T8H/T8V			T2YD (*4) T2YDT
Applications	Programming controller relay, compact solenoid valve	Dedicated for programmable controller			For programmable controller, relay				For programmable controller, relay		For programmable controller, relay (no lamp), serial		For programmable controller, relay			Dedicated for programmable controller
Output method	-				NPN output	PNP output	NPN output	NPN output	-							
Pwr. supp. V.	-				10 to 28 VDC				-							
Load voltage	85 to 265 VAC	10 to 30 VDC		24 VDC ±10%	30 VDC or less				12/24 VDC	100/110 VAC	5/12/24 VDC	100/110 VAC	12/24 VDC	110 VAC	220 VAC	24 VDC ±10%
Load current	5 to 100 mA	5 to 20 mA (*3)			100 mA or less		50 mA or less		5 to 50 mA	7 to 20 mA	50 mA or less	20 mA or less	5 to 50 mA	7 to 20 mA	7 to 10 mA	5 to 20 mA
Indicator	LED (Lit when ON)	LED (Lit when ON)	Red/green LED (Lit when ON)	Red/green LED (Lit when ON)	LED (Lit when ON)	Yellow LED (Lit when ON)	Red/green LED (Lit when ON)	Red/green LED (Lit when ON)	LED (Lit when ON)		No indicator lamp		LED (Lit when ON)			Red/green LED (Lit when ON)
Leakage current	≤ 1 mA at 100 VAC, ≤ 2 mA at 200 VAC	1 mA or less			10 μA or less				0 mA							1 mA or less
Weight g	1 m:33 3 m:87 5 m:142	1 m:18 3 m:49 5 m:80	1 m:33 3 m:87 5 m:142	1 m:18 3 m:49 5 m:80	1 m:18 3 m:49 5 m:80		1 m:33 3 m:87 5 m:142	1 m:18 3 m:49 5 m:80	1 m:18 3 m:49 5 m:80				1 m:33 3 m:87 5 m:142			1 m:61 3 m:166 5 m:272

*1 : Refer to Ending Page 1 for detailed switch specifications and dimensions.
*2 : Switches other than the above models, such as switches with connectors, are also available. Refer to Ending Page 1.
*3 : The max. load current is 20 mA at 25°C. The current is lower than 20 mA if the operating ambient temperature around the switch is higher than 25˚C. (5 to 10 mA at 60°C)
*4 : Switch for AC magnetic field (T2YD/T2YDT) cannot be used in DC magnetic field.

Theoretical thrust table

(Unit: N)

Bore size (mm)	Operating direction	Working pressure MPa 0.2	0.3	0.4	0.5	0.6	0.7	0.8	0.9	1.0
ø20	Push	-	94.2	$1.26x10^2$	$1.57x10^2$	$1.88x10^2$	$2.20x10^2$	$2.51x10^2$	$2.83x10^2$	$3.14x10^2$
	Pull	-	70.7	94.2	$1.18x10^2$	$1.41x10^2$	$1.65x10^2$	$1.88x10^2$	$2.12x10^2$	$2.36x10^2$
ø25	Push	-	$1.47x10^2$	$1.96x10^2$	$2.45x10^2$	$2.95x10^2$	$3.44x10^2$	$3.93x10^2$	$4.42x10^2$	$4.91x10^2$
	Pull	-	$1.13x10^2$	$1.51x10^2$	$1.89x10^2$	$2.27x10^2$	$2.64x10^2$	$3.02x10^2$	$3.40x10^2$	$3.78x10^2$
ø32	Push	$1.61x10^2$	$2.41x10^2$	$3.22x10^2$	$4.02x10^2$	$4.83x10^2$	$5.63x10^2$	$6.43x10^2$	$7.24x10^2$	$8.04x10^2$
	Pull	$1.21x10^2$	$1.81x10^2$	$2.41x10^2$	$3.02x10^2$	$3.62x10^2$	$4.22x10^2$	$4.83x10^2$	$5.43x10^2$	$6.03x10^2$
ø40	Push	$2.51x10^2$	$3.77x10^2$	$5.03x10^2$	$6.28x10^2$	$7.54x10^2$	$8.80x10^2$	$1.01x10^3$	$1.13x10^3$	$1.26x10^3$
	Pull	$2.11x10^2$	$3.17x10^2$	$4.22x10^2$	$5.28x10^2$	$6.33x10^2$	$7.39x10^2$	$8.44x10^2$	$9.50x10^2$	$1.06x10^3$
ø50	Push	$3.93x10^2$	$5.89x10^2$	$7.85x10^2$	$9.82x10^2$	$1.18x10^3$	$1.37x10^3$	$1.57x10^3$	$1.77x10^3$	$1.96x10^3$
	Pull	$3.30x10^2$	$4.95x10^2$	$6.60x10^2$	$8.25x10^2$	$9.90x10^2$	$1.15x10^3$	$1.32x10^3$	$1.48x10^3$	$1.65x10^3$
ø63	Push	$6.23x10^2$	$9.35x10^2$	$1.25x10^3$	$1.56x10^3$	$1.87x10^3$	$2.18x10^3$	$2.49x10^3$	$2.81x10^3$	$3.12x10^3$
	Pull	$5.61x10^2$	$8.41x10^2$	$1.12x10^3$	$1.40x10^3$	$1.68x10^3$	$1.96x10^3$	$2.24x10^3$	$2.52x10^3$	$2.80x10^3$
ø80	Push	$1.01x10^3$	$1.51x10^3$	$2.01x10^3$	$2.51x10^3$	$3.02x10^3$	$3.52x10^3$	$4.02x10^3$	$4.52x10^3$	$5.03x10^3$
	Pull	$9.07x10^2$	$1.36x10^3$	$1.81x10^3$	$2.27x10^3$	$2.72x10^3$	$3.17x10^3$	$3.63x10^3$	$4.08x10^3$	$4.54x10^3$
ø100	Push	$1.57x10^3$	$2.36x10^3$	$3.14x10^3$	$3.93x10^3$	$4.71x10^3$	$5.50x10^3$	$6.28x10^3$	$7.07x10^3$	$7.85x10^3$
	Pull	$1.43x10^3$	$2.14x10^3$	$2.86x10^3$	$3.57x10^3$	$4.29x10^3$	$5.00x10^3$	$5.72x10^3$	$6.43x10^3$	$7.15x10^3$

How to order

No switch (without magnet for switch)

SSD-K — 40 ( ) C - 10 ———— N - LB - I

With switch (built-in magnet for switch)

SSD-KL - 40 ( ) C - 10 - T0H - R - N - LB - I

Ⓐ Bore size

Rubber-air cushioned

Ⓑ Port thread

Ⓒ Stroke

Ⓓ Switch model No. *1 *8

Ⓔ Switch quantity

Ⓕ Option *2

Ⓖ Mounting bracket *3 *4

Ⓗ Accessory *5

Code	Description
Ⓐ Bore size (mm)	
20	ø20
25	ø25
32	ø32
40	ø40
50	ø50
63	ø63
80	ø80
100	ø100
Ⓑ Port thread	
Blank	Rc thread
N	NPT thread (ø32 and over) (made-to-order product)
G	G thread (ø32 and over) (made-to-order product)
Ⓒ Stroke (mm)	
Refer to the stroke table on the following page.	

Ⓓ Switch model No.

Axial lead wire	Radial lead wire	Contact	Voltage AC	Voltage DC	Indicator	Lead Line
TOH*	T0V*	Reed	●	●	1-color LED	2-wire
T5H*	T5V*	Reed	●	●	No indicator lamp	2-wire
T8H*	T8V*	Reed	●	●	1-color LED	2-wire
T1H*	T1V*	Proximity	●		1-color LED	2-wire
T2H*	T2V*	Proximity		●	1-color LED	2-wire
T3H*	T3V*	Proximity		●	1-color LED	3-wire
T3PH*	T3PV*	Proximity		●	1-color LED	3-wire
T2WH*	T2WV*	Proximity		●	2-color LED	2-wire
T2YH*	T2YV*	Proximity		●	2-color LED	2-wire
T3WH*	T3WV*	Proximity		●	2-color LED	3-wire
T3YH*	T3YV*	Proximity		●	2-color LED	3-wire
T2JH*	T2JV*	Proximity		●	1-color LED off-delay	2-wire
T2YD*	-	Proximity		●	2-color LED AC magnetic field	2-wire
T2YDT*	-	Proximity		●	2-color LED AC magnetic field	2-wire
T2HR3	T2VR3	Proximity		●	1-color LED (bend resist lead wire specs)	2-wire

* Lead wire length	
Blank	1 m (standard)
3	3 m (option)
5	5 m (option)

Ⓔ Switch quantity	
R	1 on rod side
H	1 on head side
D	2

Ⓕ Option	
Blank	Rod end female thread
N	Rod end male thread
M	Piston rod material (stainless steel)

Ⓖ Mounting bracket	
LB	Axial foot
LB2	Axial foot (compact)
CB	Clevis bracket (pin and snap ring included)
CB2	Clevis bracket (compact) (pin and snap ring included)
FA	Rod side flange
FB	Head side flange

Ⓗ Accessory (available when rod end male thread "N" is selected)	
I	Rod eye
I2	Rod eye (compact)
Y	Rod clevis (pin and snap ring included)
Y2	Rod clevis (compact) (pin and snap ring included)

⚠ Precautions for model No. selection

*1 : Switches other than Ⓓ Switch model No. are also available. (Made to order) Refer to Ending Page 1 for details.

*2 : Piston rod of ø20 and ø25 is stainless steel as standard. C-snap ring is stainless steel instead of steel. The rod end male thread nut is stainless steel.

*3 : The mounting bracket is included at shipment.

*4 : The projection dimension of piston rod WF when LB2 or FA is selected is different from that of the standard. Refer to the dimensions on pages 1109 and 1110. The number of the specified protruding dimension will be added at the end of the model No. printed on the metal plate on the body.

*5 : "I" and "Y" cannot be selected together.

*6 : Refer to Ending Page 85 for custom specifications of rod end form.

*7 : Refer to pages 1088 and 1089 for combinations of variations/options.

*8 : Switches are shipped with the product. Contact CKD if assembling before shipment is necessary.

[Example of model No.]

SSD-KL-32C-10-T0H-R-N

Model: Compact cylinder, rubber-air cushioned

Ⓐ Bore size : ø32 mm
Ⓑ Port thread : Rc thread
Ⓒ Stroke : 10 mm
Ⓓ Switch model No. : Reed switch T0H, lead wire length 1 m
Ⓔ Switch quantity : 1 on rod side
Ⓕ Option : Rod end male thread

How to order mounting bracket

Bore size (mm) / Mounting bracket	ø20	ø25	ø32	ø40	ø50	ø63	ø80	ø100
Foot (LB)	SSD-LB-20	SSD-LB-25	SSD-LB-32	SSD-LB-40	SSD-LB-50	SSD-LB-63	SSD-LB-80	SSD-LB-100
Foot (LB2)	SSD-LB2-20	SSD-LB2-25	SSD-LB2-32	SSD-LB2-40	SSD-LB2-50	SSD-LB2-63	SSD-LB2-80	SSD-LB2-100
Flange (FA/FB)	SSD-FA-20	SSD-FA-25	SSD-FA-32	SSD-FA-40	SSD-FA-50	SSD-FA-63	SSD-FA-80	SSD-FA-100
Clevis bracket (CB)	SSD-CB-20	SSD-CB-25	SSD-CB-32	SSD-CB-40	SSD-CB-50	SSD-CB-63	SSD-CB-80	SSD-CB-100
Clevis bracket (CB2)	SSD-CB2-20	SSD-CB2-25	SSD-CB2-32	SSD-CB2-40	SSD-CB2-50	SSD-CB2-63	SSD-CB2-80	SSD-CB2-100

*1: The foot mounting bracket is provided as 2 pcs./set.

[Stroke table]

Stroke (mm)		Applicable bore size							
		ø20	ø25	ø32	ø40	ø50	ø63	ø80	ø100
Standard stroke	5	●							
	10	●	●	●	●	●	●	●	●
	15	●	●	●	●	●			
	20	●	●	●	●	●	●	●	●
	25	●	●	●	●	●			
	30	●	●	●	●	●	●	●	●
	40	●	●	●	●	●	●	●	●
	50	●	●	●	●	●	●	●	●
	60			●	●	●	●	●	●
	70			●	●	●	●	●	●
	80			●	●	●	●	●	●
	90			●	●	●	●	●	●
	100			●	●	●	●	●	●
Min. stroke (mm) *1		5					10		
Max. stroke (mm)		200	300						
Custom stroke *2		In 1 mm increments							

1 : Less than 10 mm with the 2-color LED, off-delay, AC magnetic field proof, T1 or T8* switch is not available.
Refer to page 1150 for the number of installed switches and the min. stroke.
*2 : The total length is the same as that of the next longer standard stroke.
*3 : Refer to pages 1320 and 1321 for the min. stroke with mounting brackets LB and LB2.

How to order switch

SW - T0H

(Item Ⓓ on page 1152)

Cylinder weight table (the weight of the switches is when there are 2 cylinder switches.)

(Unit: g)

Stroke (mm)	5		10		15		20		25		30		40		50		60		70		80		90		100	
Bore size (mm)	No switch	Switch	No switch	Switch	No switch	Switch	No switch	Switch	No switch	Switch	No switch	Switch	No switch	Switch	No switch	Switch	No switch	Switch	No switch	Switch	No switch	Switch	No switch	Switch	No switch	Switch
ø20	75	150	88	163	101	176	113	188	126	201	138	213	163	238	188	263	213	288	238	313	263	338	288	363	313	388
ø25	—	—	118	209	134	225	150	241	165	256	182	273	214	305	246	337	278	369	310	401	342	433	374	465	406	497
ø32	—	—	188	302	209	323	231	345	253	367	275	389	318	432	361	475	404	518	447	561	490	604	533	647	576	690
ø40	—	—	263	406	290	433	316	459	342	485	369	512	422	565	475	618	528	671	581	724	634	777	687	830	740	883
ø50	—	—	425	619	467	661	510	704	553	747	594	788	678	872	762	956	846	1040	930	1124	1014	1208	1098	1292	1182	1376
ø63	—	—	617	896	—	—	727	1006	—	—	838	1117	948	1227	1058	1337	1168	1447	1278	1557	1388	1667	1498	1777	1608	1887
ø80	—	—	1101	1514	—	—	1274	1687	—	—	1448	1861	1621	2034	1794	2207	1967	2380	2140	2553	2313	2726	2486	2899	2659	3072
ø100	—	—	1660	2227	—	—	1888	2455	—	—	2115	2682	2343	2910	2571	3138	2799	3366	3027	3594	3255	3822	3483	4050	3711	4278

Stroke (mm)	110		120		130		140		150		160		170		180		190		200	
Bore size (mm)	No switch	Switch	No switch	Switch	No switch	Switch	No switch	Switch	No switch	Switch	No switch	Switch	No switch	Switch	No switch	Switch	No switch	Switch	No switch	Switch
ø20	338	413	363	438	388	463	413	488	438	513	463	538	488	563	513	588	538	613	563	638
ø25	438	529	470	561	502	593	534	625	566	657	598	689	630	721	662	753	694	785	726	817
ø32	619	733	662	776	705	819	748	862	791	905	833	947	876	990	919	1033	962	1076	1005	1119
ø40	793	936	846	989	899	1042	952	1095	1005	1148	1058	1201	1111	1254	1164	1307	1217	1360	1270	1413
ø50	1266	1460	1350	1544	1434	1628	1518	1712	1602	1796	1700	1894	1785	1979	1870	2064	1955	2149	2040	2234
ø63	1718	1997	1828	2107	1938	2217	2048	2327	2158	2437	2268	2547	2378	2657	2488	2767	2598	2877	2708	2987
ø80	2832	3245	3005	3418	3178	3591	3351	3764	3524	3937	3697	4110	3870	4283	4043	4456	4216	4629	4389	4802
ø100	3939	4506	4167	4734	4395	4962	4623	5190	4851	5418	5079	5646	5307	5874	5535	6102	5763	6830	5991	6558

Stroke (mm)	210		220		230		240		250		260		270		280		290		300	
Bore size (mm)	No switch	Switch	No switch	Switch	No switch	Switch	No switch	Switch	No switch	Switch	No switch	Switch	No switch	Switch	No switch	Switch	No switch	Switch	No switch	Switch
ø25	769	849	801	881	833	913	865	945	897	977	929	1009	961	1041	993	1073	1025	1105	1057	1137
ø32	1048	1162	1091	1205	1134	1248	1177	1291	1220	1334	1263	1377	1306	1420	1349	1463	1392	1506	1435	1549
ø40	1323	1466	1376	1519	1429	1572	1482	1625	1535	1678	1588	1731	1641	1784	1694	1837	1747	1890	1800	1943
ø50	2125	2319	2210	2404	2295	2489	2380	2574	2465	2659	2550	2744	2635	2829	2720	2914	2805	2999	2890	3084
ø63	2817	3096	2927	3206	3037	3316	3147	3426	3257	3536	3367	3646	3477	3756	3587	3866	3697	3976	3807	4086
ø80	4561	4974	4734	5147	4907	5320	5080	5493	5253	5666	5426	5839	5599	6012	5772	6185	5945	6358	6118	6531
ø100	6220	6787	6448	7015	6676	7243	6904	7471	7132	7699	7360	7927	7588	8155	7816	8383	8044	8611	8272	8839

SCP*3
CMK2
CMA2
SCM
SCG
SCA2
SCS2
CKV2
CAV2/COVP/N2
SSD2
SSG
SSD
CAT
MDC2
MVC
SMG
MSD/MSDG
FC*
STK
SRL3
SRG3
SRM3
SRT3
MRL2
MRG2
SM-25
ShkAbs
FJ
FK
Spd Contr
Ending

Internal structure and parts list

● SSD-KL-20C, 25C
(double acting/single rod high load/rubber-air cushioned/with switch)

· ø20: Over 100 to 200 mm stroke
· ø25: Over 150 to 300 mm stroke

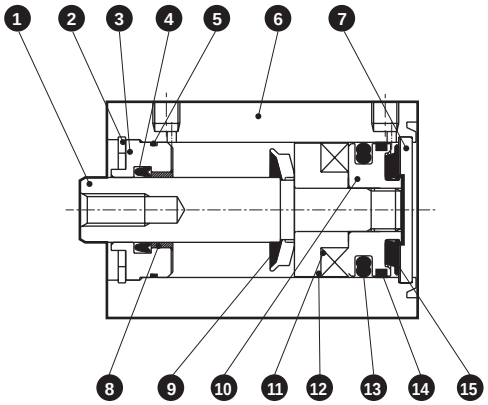

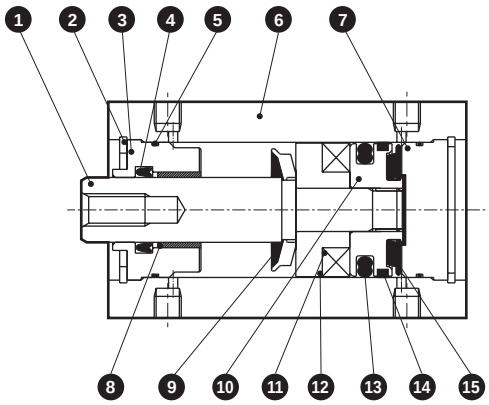

● SSD-K-20C, 25C
(double acting/single rod high load/rubber-air cushioned)

· ø20: Over 100 to 200 mm stroke
· ø25: Over 150 to 300 mm stroke

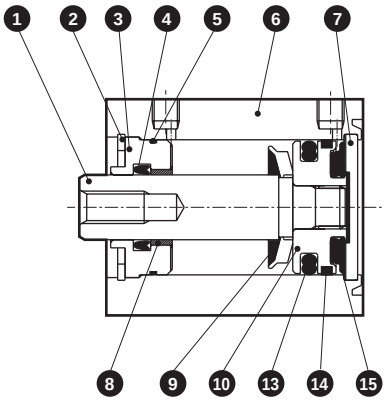

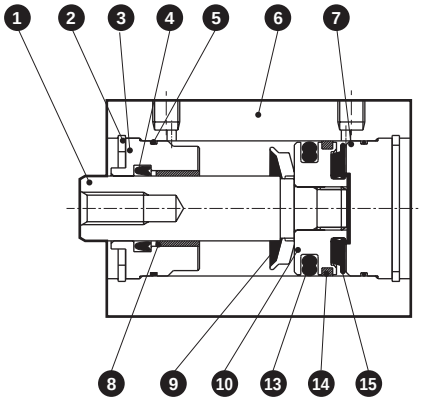

No.	Part name	Material	Remarks	No.	Part name	Material	Remarks
1	Piston rod	Steel	Industrial chrome plating	9	Rubber air cushion R	Special rubber	
2	C-snap ring	Steel	Zinc phosphate	10	Piston	Aluminum alloy	Alumite
3	Rod metal	Aluminum alloy	Alumite	11	Magnet	Plastic	
4	Rod packing	Nitrile rubber		12	Spacer	Aluminum alloy	Alumite
5	Rod metal gasket	Nitrile rubber		13	Piston packing	Nitrile rubber	
6	Body	Aluminum alloy	Hard alumite	14	Wear ring	Polyacetal resin	
7	Cover	Aluminum alloy		15	Rubber air cushion H	Special rubber	
8	Bush	Oiles drymet					

Repair parts list

Bore size (mm)	Kit No.	Repair parts No.
ø20	SSD-K-20CK	4 5 9
ø25	SSD-K-25CK	13 14 15

Dimensions

Same as SSD-K Series (double acting/high load).
Refer to pages 1122 to 1125.

Internal structure and parts list

● SSD-KL-32C to 100C
(double acting/single rod high load/rubber-air cushioned/ with switch)

· ø32 to ø50: Over 150 to 300 mm stroke
· ø63 to ø100: Over 200 to 300 mm stroke

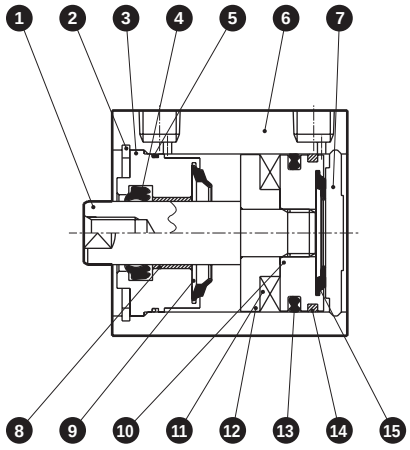

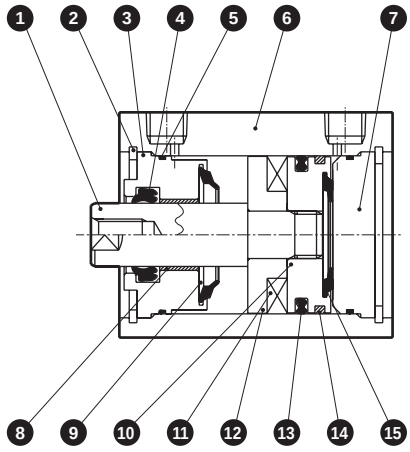

● SSD-K-32C to 100C
(double acting/single rod high high load/rubber-air cushioned)

· ø32 to ø50: Over 150 to 300 mm stroke
· ø63 to ø100: Over 200 to 300 mm stroke

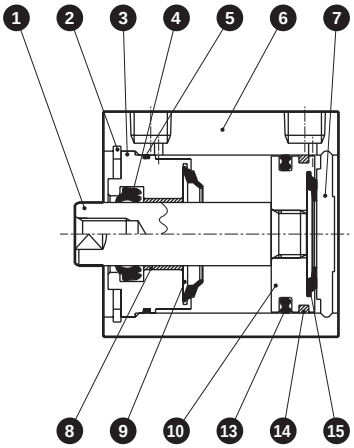

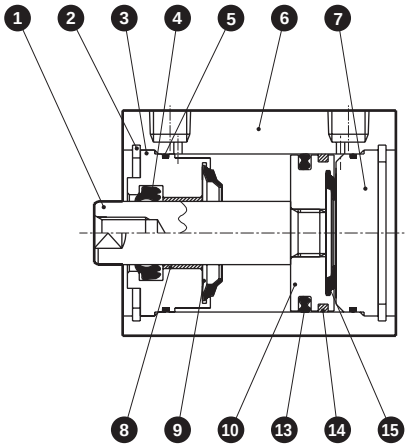

No.	Part name	Material	Remarks	No.	Part name	Material	Remarks
1	Piston rod	Steel	Industrial chrome plating	9	Rubber air cushion R	Special rubber	
2	C-snap ring	Steel	Zinc phosphate	10	Piston	Aluminum alloy	Alumite
3	Rod metal	Aluminum alloy	Alumite	11	Magnet	Plastic	
4	Rod packing	Nitrile rubber		12	Spacer	Aluminum alloy	Alumite
5	Rod metal gasket	Nitrile rubber		13	Piston packing	Nitrile rubber	
6	Body	Aluminum alloy	Hard alumite	14	Wear ring	Polyacetal resin	
7	Cover	Aluminum alloy	Alumite	15	Rubber air cushion H	Special rubber	
8	Bush	Oiles drymet					

Repair parts list

Bore size (mm)	Kit No.	Repair parts No.
ø32	SSD-K-32CK	4 5 9 13 14 15
ø40	SSD-K-40CK	
ø50	SSD-K-50CK	
ø63	SSD-K-63CK	
ø80	SSD-K-80CK	
ø100	SSD-K-100CK	

Technical data

[Comparison of collision noise level]

Standard rubber cushion:
Rubber-air cushion:

Values are comparison samples obtained under the conditions below.
As the values vary with base rigidity, etc., they are not guaranteed.

(Test conditions)
Cylinder : SSD
Mounting direction of cylinder : Vertical with rod upward
Cylinder supply pressure : 0.5 MPa
Measurement position of sound level meter : 1 m from sample

ø 20

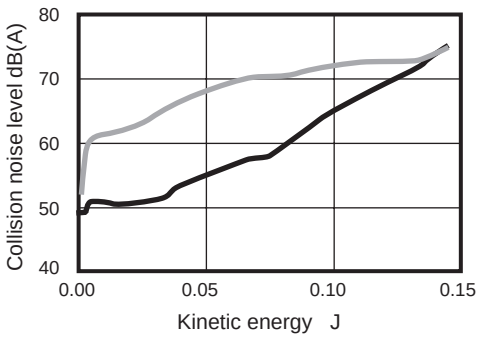

ø 25

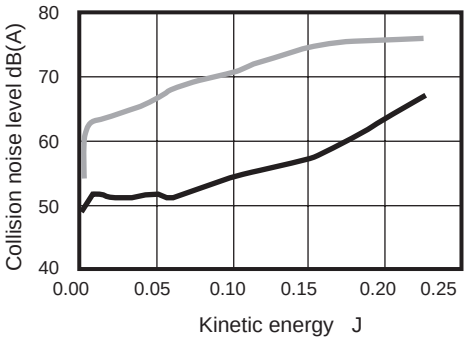

ø 32

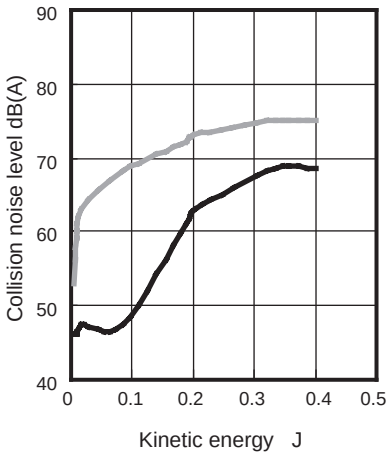

ø 40

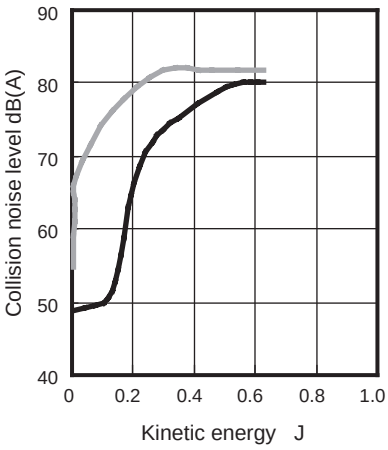

ø 50

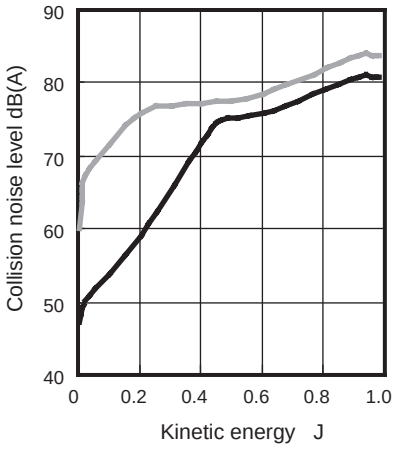

ø 63

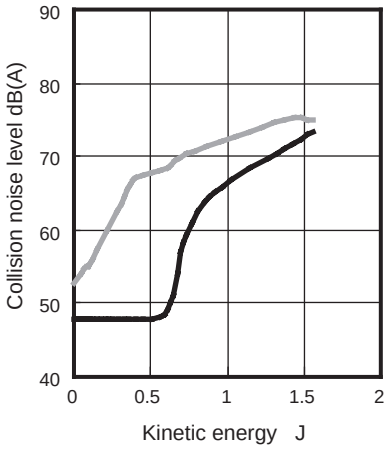

ø 80

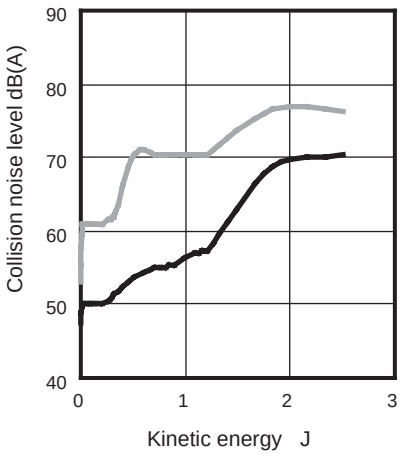

ø 100

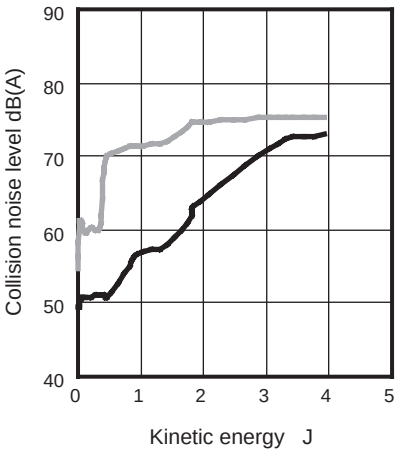

Technical data

[Comparison of collision acceleration]

Standard rubber cushion:
Rubber-air cushion:

ø 20

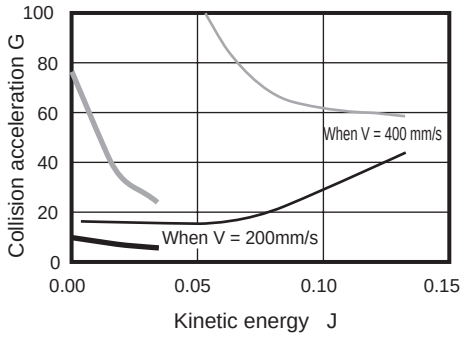

ø 25

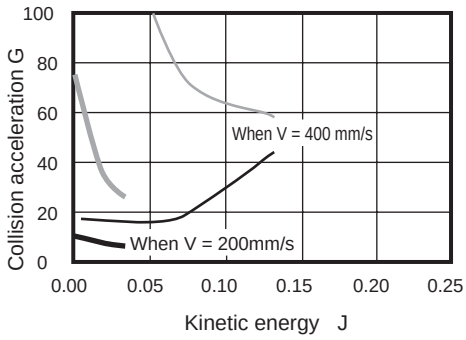

ø 32

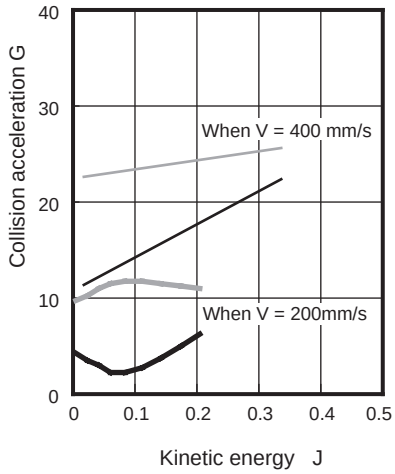

ø 40

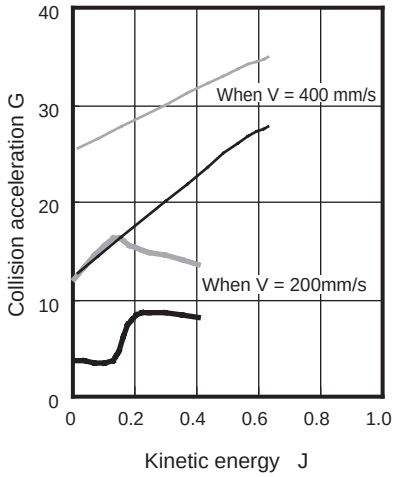

ø 50

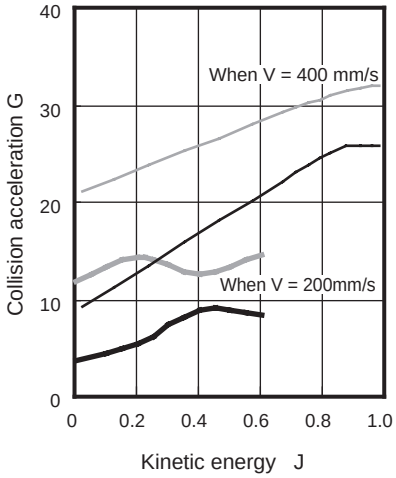

ø 63

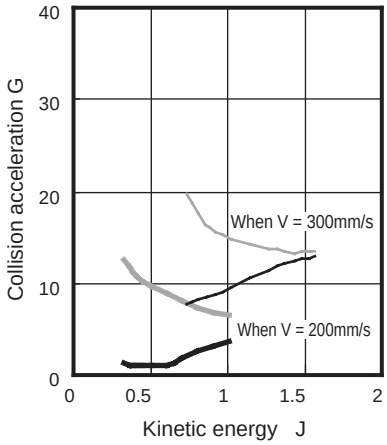

ø 80

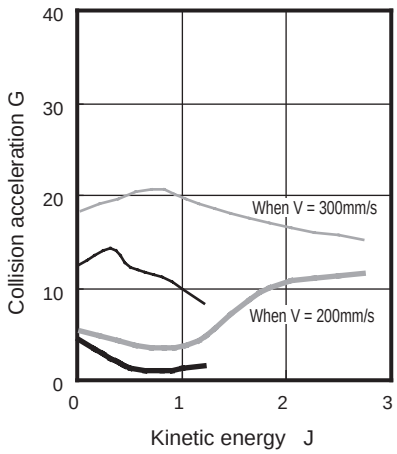

ø 100

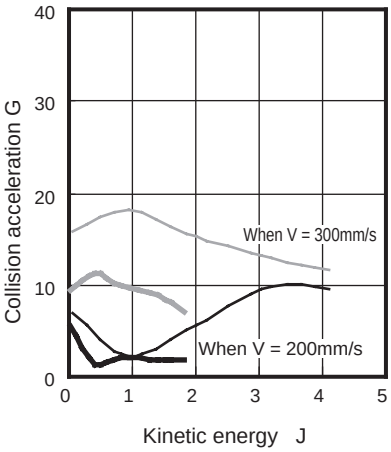

SCP*3
CMK2
CMA2
SCM
SCG
SCA2
SCS2
CKV2
CAV2/ COVP/N2
SSD2
SSG
SSD
CAT
MDC2
MVC
SMG
MSD/ MSDG
FC*
STK
SRL3
SRG3
SRM3
SRT3
MRL2
MRG2
SM-25
ShkAbs
FJ
FK
Spd Contr
Ending

[Allowable energy value]

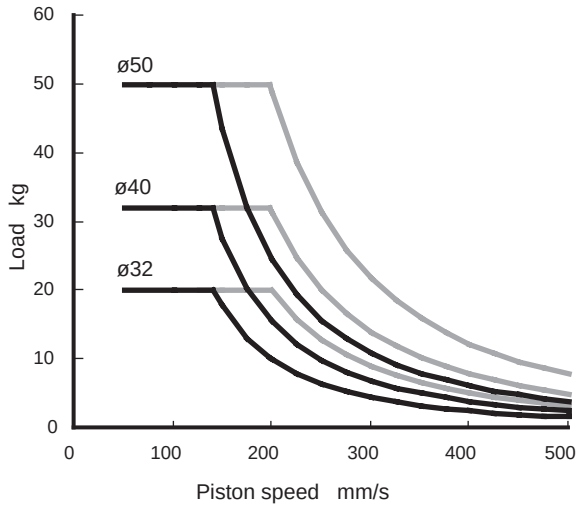

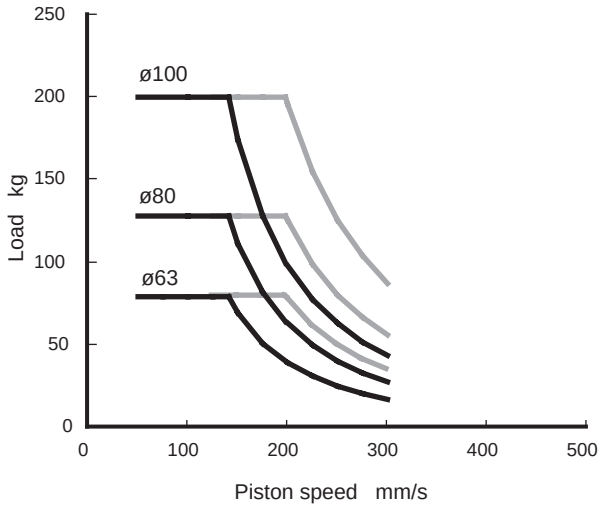

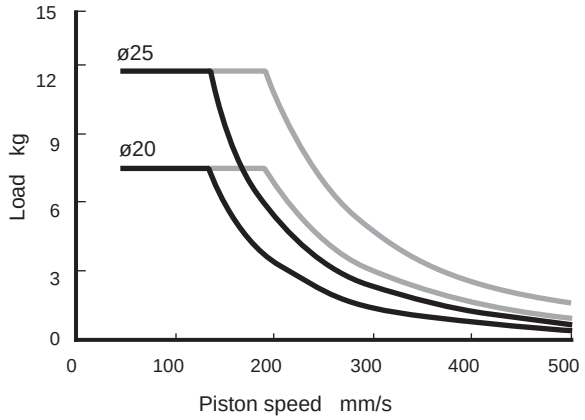

Usable in the range below and to the left of the curve.
Although it can also be used in the range marked with ——— in the figure, we recommend use within the range marked with a solid line to maximize the noise reduction effect.

MEMO

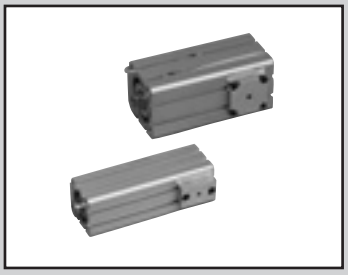

Compact cylinder double acting/with position locking

SSD-Q Series

● Bore size: ø16/ø20/ø25/ø32/ø40/ø50/ø63/ø80/ø100

JIS symbol

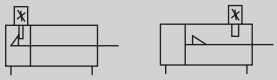

RoHS CAD

Specifications

Item	SSD-Q SSD-QL (with switch)								
Bore size mm	ø16	ø20	ø25	ø32	ø40	ø50	ø63	ø80	ø100
Actuation	Double acting/position locking								
Working fluid	Compressed air								
Max. working pressure MPa	1.0 (≈150 psi, 10 bar)								
Min. working pressure MPa	0.15 (≈22 psi, 1.5 bar)								
Proof pressure MPa	1.6 (≈230 psi, 16 bar)								
Ambient temperature °C	-10 (14°F) to 60 (140°F) (no freezing)								
Port size	M5			Rc1/8		Rc1/4		Rc3/8	
Stroke tolerance mm	$^{+2.5}_{0}$								
Working piston speed mm/s	50 to 500						50 to 300		
Cushion	Rubber cushion								
Lubrication	Not required (use turbine oil class 1 ISO VG32 if necessary for lubrication)								
Position locking mechanism	Head side or rod side								
Holding force N	Max. thrust x 0.7								
Allowable absorbed energy J	0.09	0.157	0.157	0.402	0.628	0.98	1.56	2.51	3.92

Stroke

Bore size (mm)	Standard stroke (mm)	Max. stroke (mm)	Min. stroke (mm)
ø16	5, 10, 15, 20	100 (*1)	5
ø20	25, 30, 40, 50	200 (*1)	
ø25	10, 15, 20, 25, 30 45, 50, 60, 70, 80 90, 100	300 (*1)	
ø32			
ø40			
ø50			
ø63	10, 20, 30, 40, 50 60, 70, 80, 90, 100		
ø80			
ø100			

*1) Dimensions of custom stroke (example: 64 mm stroke) are obtained by directly entering the value of custom stroke (64). Available in 1mm increments.
*2) When using the type with switch, refer to the table at right.

Number of installed switches and min. stroke (mm)

Switch quantity	1	2	3	4	5
Switch model No. / Bore size (mm)	T*	T*	T*	T*	T*
ø16	5	5	25	-	-
ø20	5	5	35	50	65
ø25	5	5	35	50	65
ø32	5	5	35	50	65
ø40	5	5	35	50	65
ø50	5	5	35	50	65
ø63	5	5	35	50	65
ø80	5	5	35	50	65
ø100	5	5	35	50	65

1: Less than 10 mm with the 2-color LED, off-delay, AC magnetic field proof, T1 or T8* switch is not available.

Operational explanation

● When locked

When the piston ① of the cylinder moves toward the stroke end, the stopper piston ③ is pushed up along the slope of the sleeve ②.

When the cylinder piston comes to the stroke end and the sleeve groove Ⓐ reaches the stopper piston position, the stopper piston is pushed down by the spring ④ and fits into the groove, completing the lock action.

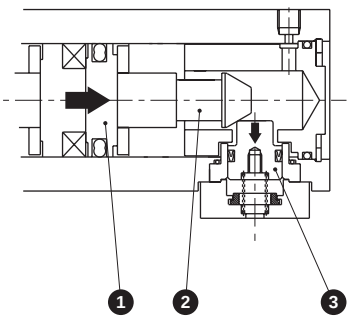

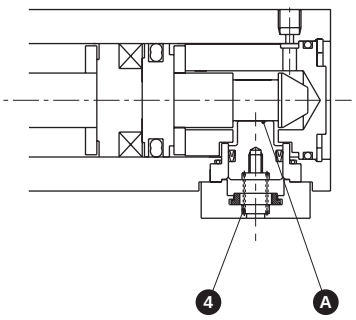

● Unlocking

When pressure is supplied to the port, the stopper piston pushes up the spring and slips out of the sleeve groove, releasing the lock.

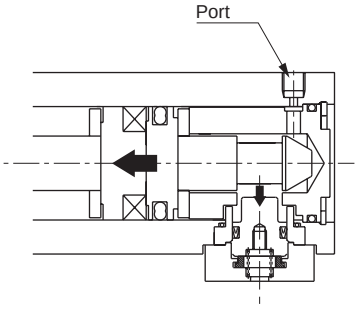

⚠ Be sure to read the Safety precautions for the Position locking on pages 1334 to 1338 before use.

Switch specifications

● 1-color/2-color LED/for AC magnetic field proof

Item	2-wire proximity				3-wire proximity				2-wire reed							2-wire proximity
	T1H/ T1V	T2H/T2V/ T2JH/T2JV	T2YH/ T2YV	T2WH/ T2WV	T3H/ T3V	T3PH/ T3PV	T3YH/ T3YV	T3WH/ T3WV	T0H/T0V		T5H/T5V		T8H/T8V			T2YD (*4) T2YDT
Applications	For programmable controller, relay, compact solenoid valve	Dedicated for programmable controller			For programmable controller, relay				For programmable controller, relay		For programmable controller, relay (no lamp), serial		For programmable controller, relay			Dedicated for programmable controller
Output method	-				NPN output	PNP output	NPN output	NPN output	-							
Pwr. supp. V.	-				10 to 28 VDC				-							
Load voltage	85 to 265 VAC	10 to 30 VDC		24 VDC ±10%	30 VDC or less				12/24 VDC	100/110 VAC	5/12/24 VDC	100/110 VAC	12/24 VDC	110 VAC	220 VAC	24 VDC ±10%
Load current	5 to 100 mA	5 to 20 mA (*3)			100 mA or less		50 mA or less		5 to 50 mA	7 to 20 mA	50 mA or less	20 mA or less	5 to 50 mA	7 to 20 mA	7 to 10 mA	5 to 20 mA
Indicator	LED (Lit when ON)	LED (Lit when ON)	Red/green LED (Lit when ON)	Red/green LED (Lit when ON)	LED (Lit when ON)	Yellow LED (Lit when ON)	Red/green LED (Lit when ON)	Red/green LED (Lit when ON)	LED (Lit when ON)		No indicator lamp		LED (Lit when ON)			Red/green LED (Lit when ON)
Leakage current	≤ 1 mA at 100 VAC, ≤ 2 mA at 200 VAC	1 mA or less			10 μA or less				0 mA							1 mA or less
Weight g	1 m:33 3 m:87 5 m:142	1 m:18 3 m:49 5 m:80	1 m:33 3 m:87 5 m:142	1 m:18 3 m:49 5 m:80	1 m:18 3 m:49 5 m:80		1 m:33 3 m:87 5 m:142	1 m:18 3 m:49 5 m:80	1 m:18 3 m:49 5 m:80				1 m:33 3 m:87 5 m:142			1 m:61 3 m:166 5 m:272

*1 : Refer to Ending Page 1 for detailed switch specifications and dimensions.
*2: Switches other than the above models, such as switches with connectors, are also available. Refer to Ending Page 1.
*3 : The max. load current is 20 mA at 25°C. The current is lower than 20 mA if the operating ambient temperature around the switch is higher than 25˚C. (5 to 10 mA at 60°C)
*4 : Switch for AC magnetic field (T2YD/T2YDT) cannot be used in DC magnetic field.

Cylinder weight table

(the weight of the switches is when there are 2 cylinder switches.) (Unit: g)

Bore size (mm)	Product weight for 0 mm stroke		St = Additional weight per 10 mm
	No switch	With switch	
ø16	119	164	21
ø20	164	239	25
ø25	227	318	32
ø32	377	491	43
ø40	599	742	53
ø50	1197	1391	84
ø63	1703	1982	110
ø80	3651	4064	173
ø100	5291	5858	228

(Example) Product weight

SSD-QL-40-50-T0H-D-H

- ● Product weight for 0 mm stroke ..... 742 g
- ● Additional weight for stroke 50 mm..... 53 x 5 = 265 g
- ● Product weight.....742 + 265 = 1007 g

Theoretical thrust table

(Unit: N)

Bore size (mm)	Operating direction	Working pressure MPa									
		0.15	0.2	0.3	0.4	0.5	0.6	0.7	0.8	0.9	1.0
ø16	Push	30.2	40.2	60.3	80.4	$1.01x10^2$	$1.21x10^2$	$1.41x10^2$	$1.61x10^2$	$1.81x10^2$	$2.01x10^2$
	Pull	22.6	30.2	45.2	60.3	75.4	90.5	$1.06x10^2$	$1.21x10^2$	$1.36x10^2$	$1.51x10^2$
ø20	Push	47.1	62.8	94.2	$1.26x10^2$	$1.57x10^2$	$1.88x10^2$	$2.20x10^2$	$2.51x10^2$	$2.83x10^2$	$3.14x10^2$
	Pull	35.3	47.1	70.7	94.2	$1.18x10^2$	$1.41x10^2$	$1.65x10^2$	$1.88x10^2$	$2.12x10^2$	$2.36x10^2$
ø25	Push	73.6	98.2	$1.47x10^2$	$1.96x10^2$	$2.45x10^2$	$2.95x10^2$	$3.44x10^2$	$3.93x10^2$	$4.42x10^2$	$4.91x10^2$
	Pull	56.7	75.6	$1.13x10^2$	$1.51x10^2$	$1.89x10^2$	$2.27x10^2$	$2.64x10^2$	$3.02x10^2$	$3.40x10^2$	$3.78x10^2$
ø32	Push	$1.21x10^2$	$1.61x10^2$	$2.41x10^2$	$3.22x10^2$	$4.02x10^2$	$4.83x10^2$	$5.63x10^2$	$6.43x10^2$	$7.24x10^2$	$8.04x10^2$
	Pull	90.5	$1.21x10^2$	$1.81x10^2$	$2.41x10^2$	$3.02x10^2$	$3.62x10^2$	$4.22x10^2$	$4.83x10^2$	$5.43x10^2$	$6.03x10^2$
ø40	Push	$1.88x10^2$	$2.51x10^2$	$3.77x10^2$	$5.03x10^2$	$6.28x10^2$	$7.54x10^2$	$8.80x10^2$	$1.01x10^3$	$1.13x10^3$	$1.26x10^3$
	Pull	$1.58x10^2$	$2.11x10^2$	$3.17x10^2$	$4.22x10^2$	$5.28x10^2$	$6.33x10^2$	$7.39x10^2$	$8.44x10^2$	$9.50x10^2$	$1.06x10^3$
ø50	Push	$2.95x10^2$	$3.93x10^2$	$5.89x10^2$	$7.85x10^2$	$9.82x10^2$	$1.18x10^3$	$1.37x10^3$	$1.57x10^3$	$1.77x10^3$	$1.96x10^3$
	Pull	$2.47x10^2$	$3.30x10^2$	$4.95x10^2$	$6.60x10^2$	$8.25x10^2$	$9.90x10^2$	$1.15x10^3$	$1.32x10^3$	$1.48x10^3$	$1.65x10^3$
ø63	Push	$4.68x10^2$	$6.23x10^2$	$9.35x10^2$	$1.25x10^3$	$1.56x10^3$	$1.87x10^3$	$2.18x10^3$	$2.49x10^3$	$2.81x10^3$	$3.12x10^3$
	Pull	$4.20x10^2$	$5.61x10^2$	$8.41x10^2$	$1.12x10^3$	$1.40x10^3$	$1.68x10^3$	$1.96x10^3$	$2.24x10^3$	$2.52x10^3$	$2.80x10^3$
ø80	Push	$7.54x10^2$	$1.01x10^3$	$1.51x10^3$	$2.01x10^3$	$2.51x10^3$	$3.02x10^3$	$3.52x10^3$	$4.02x10^3$	$4.52x10^3$	$5.03x10^3$
	Pull	$6.80x10^2$	$9.07x10^2$	$1.36x10^3$	$1.81x10^3$	$2.27x10^3$	$2.72x10^3$	$3.17x10^3$	$3.63x10^3$	$4.08x10^3$	$4.54x10^3$
ø100	Push	$1.18x10^3$	$1.57x10^3$	$2.36x10^3$	$3.14x10^3$	$3.93x10^3$	$4.71x10^3$	$5.50x10^3$	$6.28x10^3$	$7.07x10^3$	$7.85x10^3$
	Pull	$1.07x10^3$	$1.43x10^3$	$2.14x10^3$	$2.86x10^3$	$3.57x10^3$	$4.29x10^3$	$5.00x10^3$	$5.72x10^3$	$6.43x10^3$	$7.15x10^3$

How to order

● No switch (without magnet for switch)

SSD-Q - 16 ( ) - 5 - R ——— N - LB - I

● With switch (built-in magnet for switch)

SSD-QL - 16 ( ) - 5 - R - T0H - R - N - LB - I

Ⓐ Bore size

Ⓑ Port thread

Ⓒ Stroke

Ⓓ Position locking mechanism

Ⓔ Switch model No. *1 *7

Ⓕ Switch quantity

Ⓖ Option

Ⓗ Mounting bracket *2 *3

Ⓘ Accessory *4

Code	Description
Ⓐ Bore size (mm)	
16	ø16
20	ø20
25	ø25
32	ø32
40	ø40
50	ø50
63	ø63
80	ø80
100	ø100

Ⓑ Port thread	
Blank	Rc thread
NN	NPT thread (ø32 and over) (made-to-order product)
GN	G thread (ø32 and over) (made-to-order product)

Ⓒ Stroke (mm)

Refer to the stroke table on the following page.

Ⓓ Position locking mechanism	
R	With rod side position locking
H	With head side position locking

Ⓔ Switch model No.

Axial lead wire	Radial lead wire	Contact	Voltage AC	Voltage DC	Indicator	Lead wire
TOH*	T0V*	Reed	●	●	1-color LED	2-wire
T5H*	T5V*	Reed	●	●	No indicator lamp	2-wire
T8H*	T8V*	Reed	●	●	1-color LED	2-wire
T1H*	T1V*	Proximity	●		1-color LED	2-wire
T2H*	T2V*	Proximity		●	1-color LED	2-wire
T3H*	T3V*	Proximity		●	1-color LED	3-wire
T3PH*	T3PV*	Proximity		●	1-color LED	3-wire
T2WH*	T2WV*	Proximity		●	2-color LED	2-wire
T2YH*	T2YV*	Proximity		●	2-color LED	2-wire
T3WH*	T3WV*	Proximity		●	2-color LED	3-wire
T3YH*	T3YV*	Proximity		●	2-color LED	3-wire
T2JH*	T2JV*	Proximity		●	1-color LED off-delay	2-wire
T2YD*	-	Proximity		●	2-color LED AC magnetic field	2-wire
T2YDT*	-	Proximity		●	2-color LED AC magnetic field	2-wire
T2HR3	T2VR3	Proximity		●	1-color LED (bend resist lead wire specs)	2-wire

*** Lead wire length**	
Blank	1 m (standard)
3	3 m (option)
5	5 m (option)

Ⓕ Switch quantity	
R	1 on rod side
H	1 on head side
D	2

Ⓖ Option	
Blank	Rod end female thread
N	Rod end male thread

Ⓗ Mounting bracket	
LB	Axial foot
LB2	Axial foot (compact)
CB	Clevis bracket (pin and snap ring included)
CB2	Clevis bracket (compact) (pin and snap ring included)
FA	Rod side flange
FB	Head side flange

Ⓘ Accessory (available when rod end male thread "N" is selected)	
I	Rod eye
I2	Rod eye (compact)
Y	Rod clevis (pin and snap ring included)
Y2	Rod clevis (compact) (pin and snap ring included)

⚠ Precautions for model No. selection

1 : AC magnetic field proof switch and T8 switch cannot be installed on ø16.
*2 : The mounting bracket is included at shipment.
*3 : The projection dimension of piston rod WF when LB2 or FA is selected is different from that of the standard. Refer to the dimensions on pages 1109 and 1110. The number of the specified protruding dimension will be added at the end of the model No. printed on the metal plate on the body.
*4 : "I" and "Y" cannot be selected together.
*5 : Refer to Ending Page 85 for custom specifications of rod end form.
*6 : Refer to pages 1086 and 1087 for combinations of variations/options.
*7 : Switches are shipped with the product. Contact CKD if assembling before shipment is necessary.

[Example of model No.]

SSD-QL-16-5-R-T0H-R-N

Model: Compact cylinder, position locking

Ⓐ Bore size	: ø16 mm
Ⓑ Port thread	: Rc thread
Ⓒ Stroke	: 5 mm
Ⓓ Position locking mechanism	: With rod side position locking
Ⓔ Switch model No.	: Reed switch T0H, lead wire 1 m
Ⓕ Switch quantity	: 1 on rod side
Ⓖ Option	: Rod end male thread

How to order switch

SW - T0H

Switch model No. (Item Ⓔ above)

[Stroke table]

Stroke (mm)		Applicable bore size								
		ø16	ø20	ø25	ø32	ø40	ø50	ø63	ø80	ø100
Standard stroke	5	●	●							
	10	●	●	●	●	●	●	●	●	●
	15	●	●	●	●	●	●			
	20	●	●	●	●	●	●	●	●	●
	25	●	●	●	●	●	●			
	30	●	●	●	●	●	●	●	●	●
	40	●	●	●	●	●	●	●	●	●
	50	●	●	●	●	●	●	●	●	●
	60			●	●	●	●	●	●	●
	70			●	●	●	●	●	●	●
	80			●	●	●	●	●	●	●
	90			●	●	●	●	●	●	●
	100			●	●	●	●	●	●	●
Min. stroke (mm) *1		5								
Max. stroke (mm)		100	200	300						
Custom stroke *2		In 1 mm increments								

1 : Less than 5 mm with 1-color LED switch and less than 10 mm with the 2-color LED, off-delay, AC magnetic field proof, T1 or T8* switch are not available.
Refer to page 1160 for the number of installed switches and the min. stroke.
*2 : Total length is obtained by directly entering the value of custom stroke.

How to order mounting bracket

Bore size (mm) / Mounting bracket	ø16	ø20	ø25	ø32	ø40	ø50	ø63	ø80	ø100
Foot (LB)	SSD-LB-16	SSD-LB-20	SSD-LB-25	SSD-LB-32	SSD-LB-40	SSD-LB-50	SSD-LB-63	SSD-LB-80	SSD-LB-100
Foot (LB2)	SSD-LB2-16	SSD-LB2-20	SSD-LB2-25	SSD-LB2-32	SSD-LB2-40	SSD-LB2-50	SSD-LB2-63	SSD-LB2-80	SSD-LB2-100
Flange (FA/FB)	SSD-FA-16	SSD-FA-20	SSD-FA-25	SSD-FA-32	SSD-FA-40	SSD-FA-50	SSD-FA-63	SSD-FA-80	SSD-FA-100
Clevis bracket (CB)	SSD-CB-16	SSD-CB-20	SSD-CB-25	SSD-CB-32	SSD-CB-40	SSD-CB-50	SSD-CB-63	SSD-CB-80	SSD-CB-100
Clevis bracket (CB2)	SSD-CB2-16	SSD-CB2-20	SSD-CB2-25	SSD-CB2-32	SSD-CB2-40	SSD-CB2-50	SSD-CB2-63	SSD-CB2-80	SSD-CB2-100

*1: The foot mounting bracket is provided as 2 pcs./set.

Specifications for rechargeable battery (catalog No. CC-1226A)

● Design compatible with rechargeable battery manufacturing process

SSD-Q····· **P4***

Internal structure and parts list (ø16 to ø25)

● SSD-QL-16 to 25-R
(double acting/single rod/with switch/rod side position locking)

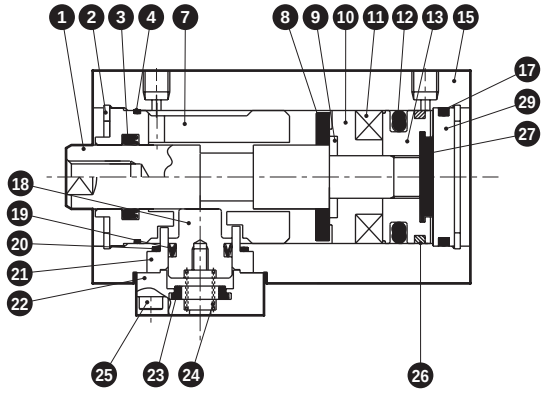

● SSD-QL-16 to 25-H
(double acting/single rod/with switch/head side position locking)

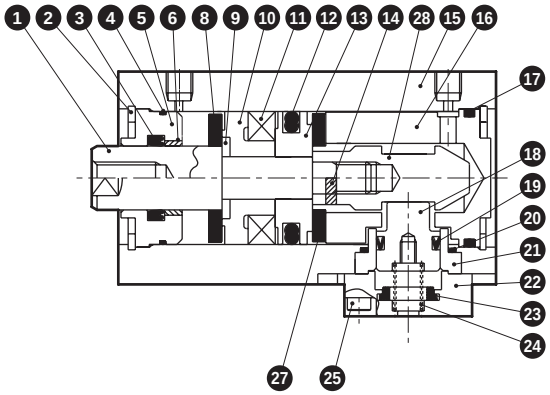

● SSD-Q-16 to 25-R
(double acting/single rod/rod side position locking)

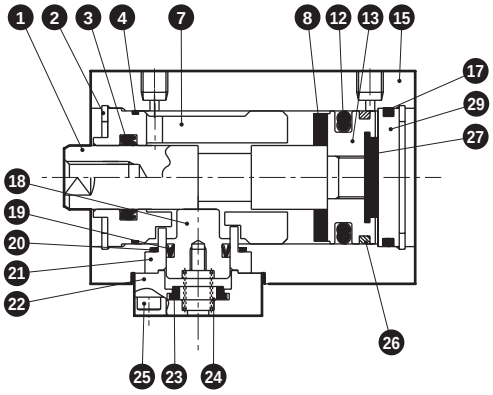

● SSD-Q-16 to 25-H
(double acting/single rod/head side position locking)

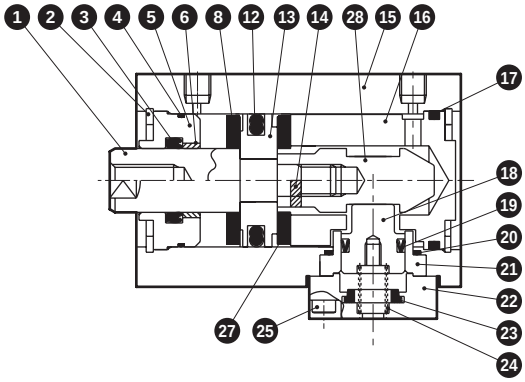

Parts list

No.	Part name	Material	Remarks	No.	Part name	Material	Remarks
1	Piston rod	Stainless steel	Industrial chrome plating	15	Body	Aluminum alloy	Hard alumite
2	C-snap ring	Steel	Zinc phosphate	16	Head cover	Aluminum alloy	Chromate
3	Rod packing	Nitrile rubber		17	O-ring	Nitrile rubber	
4	Rod metal gasket	Nitrile rubber		18	Stopper piston	Steel	Nitriding
5	Rod metal	Special aluminum	Alumite	19	Stopper packing	Nitrile rubber	
6	Bush	Oiles drymet	Only for ø20 and ø25 H sides	20	O-ring	Nitrile rubber	
7	Rod cover	Aluminum alloy	Alumite	21	Stopper housing	Aluminum alloy	Alumite
8	Cushion rubber R	Urethane rubber		22	Stopper cover	Aluminum alloy	Alumite
9	Spacer washer	Stainless steel		23	Cushion rubber	Urethane rubber	
10	Spacer	Special resin		24	Coil spring	Piano wire	Electrodeposition
11	Magnet	Plastic		25	Hexagon socket head cap screw	Steel	Black galvanizing
12	Piston packing	Nitrile rubber		26	Wear ring	Polyacetal resin	
13	Piston	Aluminum alloy	Chromate	27	Cushion rubber H	Urethane rubber	
				28	Sleeve	Steel	Nitriding
14	Spring pin	Steel	Black finish ø20, ø25	29	Cover	Aluminum alloy	Chromate

Repair parts list

Bore size (mm)	Kit No.		Repair parts No.
	With rod side position locking	With head side position locking	
ø16	SSD-Q-R-16K	SSD-Q-H-16K	3 4 8 12 17 19 20 23 26 27
ø20	SSD-Q-R-20K	SSD-Q-H-20K	
ø25	SSD-Q-R-25K	SSD-Q-H-25K	

*1: 26 is not available with head side position locking.

Internal structure and parts list (ø32 to ø40)

● SSD-QL-32 to 40-R
(double acting/single rod/with switch/rod side position locking)

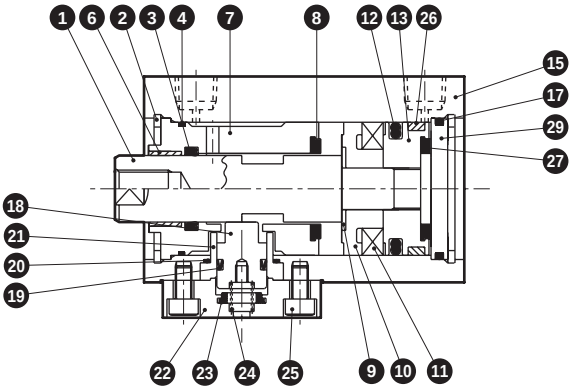

● SSD-QL-32 to 40-H
(double acting/single rod/with switch/head side position locking)

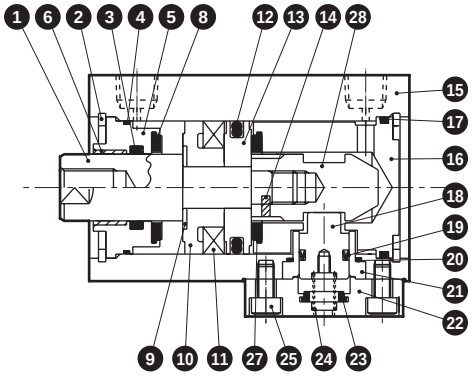

● SSD-Q-32 to 40-R
(double acting/single rod/rod side position locking)

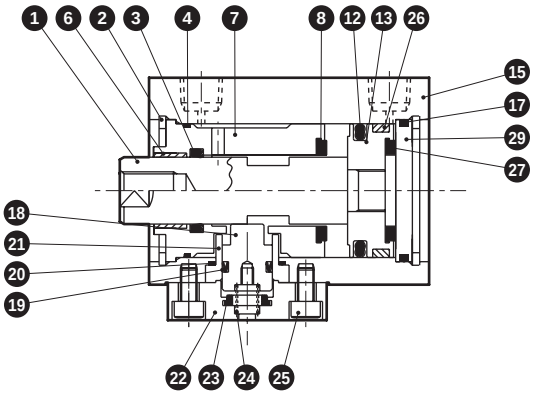

● SSD-Q-32 to 40-H
(double acting/single rod/head side position locking)

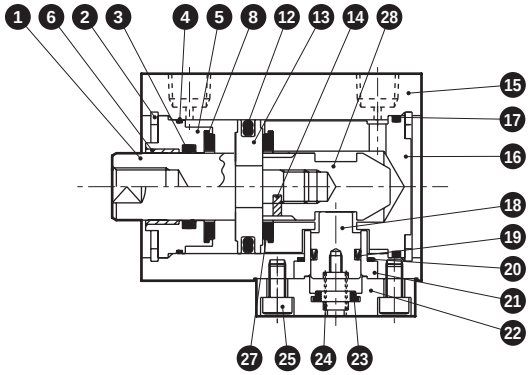

Parts list

No.	Part name	Material	Remarks	No.	Part name	Material	Remarks
1	Piston rod	Steel	Industrial chrome plating	16	Head cover	Aluminum alloy	Chromate
2	C-snap ring	Steel	Zinc phosphate	17	O-ring	Nitrile rubber	
3	Rod packing	Nitrile rubber		18	Stopper piston	Steel	Nitriding
4	Rod metal gasket	Nitrile rubber		19	Stopper packing	Nitrile rubber	
5	Rod metal	Special aluminum	Alumite	20	O-ring	Nitrile rubber	
6	Bush	Oiles drymet		21	Stopper housing	Aluminum alloy	Alumite
7	Rod cover	Aluminum alloy	Alumite	22	Stopper cover	Aluminum alloy	Alumite
8	Cushion rubber R	Urethane rubber		23	Cushion rubber	Urethane rubber	
9	Spacer washer	Stainless steel		24	Coil spring	Piano wire	Electrodeposition
10	Spacer	Special resin		25	Hexagon socket head cap screw	Steel	Black galvanizing
11	Magnet	Plastic		26	Wear ring	Polyacetal resin	
12	Piston packing	Nitrile rubber		27	Cushion rubber H	Urethane rubber	
13	Piston	Aluminum alloy	Chromate	28	Sleeve	Steel	Nitriding
14	Spring pin	Steel	Black finish	29	Cover	Aluminum alloy	Chromate
15	Body	Aluminum alloy	Hard alumite				

Repair parts list

Bore size (mm)	Kit No.		Repair parts No.
	With rod side position locking	With head side position locking	
ø32	SSD-Q-R-32K	SSD-Q-H-32K	3 4 8 12 17
ø40	SSD-Q-R-40K	SSD-Q-H-40K	19 20 23 26 27

*1: 26 is not available with head side position locking.

Internal structure and parts list (ø50 to ø100)

● SSD-QL-50 to 100-R
(double acting/single rod/with switch/rod side position locking)

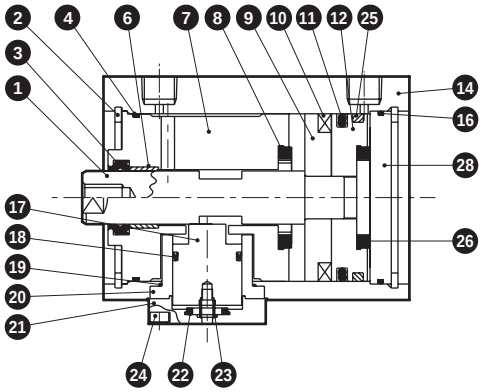

● SSD-QL-50 to 100-H
(double acting/single rod/with switch/head side position locking)

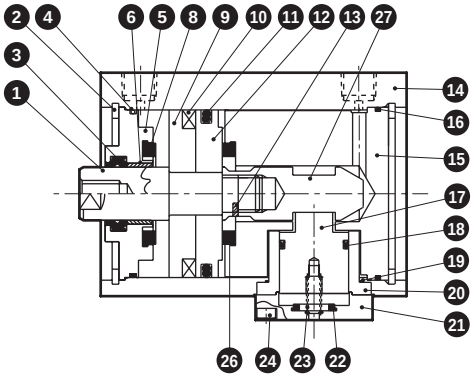

● SSD-Q-50 to 100-R
(double acting/single rod/rod side position locking)

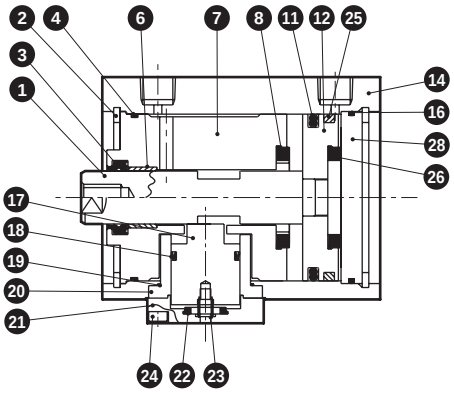

● SSD-Q-50 to 100-H
(double acting/single rod/head side position locking)

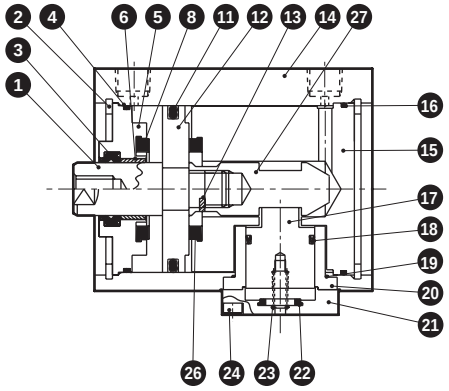

Parts list

No.	Part name	Material	Remarks	No.	Part name	Material	Remarks
1	Piston rod	Steel	Industrial chrome plating	15	Head cover	Aluminum alloy	Chromate
2	C-snap ring	Steel	Zinc phosphate	16	O-ring	Nitrile rubber	
3	Rod packing	Nitrile rubber		17	Stopper piston	Steel	Nitriding
4	Rod metal gasket	Nitrile rubber		18	Stopper packing	Nitrile rubber	
5	Rod metal	Special aluminum	Chromate	19	O-ring	Nitrile rubber	
6	Bush	Oiles drymet		20	Stopper housing	Aluminum alloy	Alumite
7	Rod cover	Aluminum alloy	Chromate	21	Stopper cover	Aluminum alloy	Alumite
8	Cushion rubber R	Urethane rubber		22	Cushion rubber	Urethane rubber	
9	Spacer	ø50: Special resin ø63 to ø100: Aluminum alloy	ø63 to 100: Chromate	23	Coil spring	Piano wire	Electrodeposition
				24	Hexagon socket head cap screw	Steel	Black galvanizing
10	Magnet	Plastic		25	Wear ring	Polyacetal resin	
11	Piston packing	Nitrile rubber		26	Cushion rubber H	Urethane rubber	
12	Piston	Aluminum alloy	Chromate	27	Sleeve	Steel	Nitriding
13	Spring pin	Steel	Black finish	28	Cover	Aluminum alloy	Chromate
14	Body	Aluminum alloy	Hard alumite				

Repair parts list

Bore size (mm)	Kit No.		Repair parts No.
	With rod side position locking	With head side position locking	
ø50	SSD-Q-R-50K	SSD-Q-H-50K	3 4 8 11 16 18 19 22 25 26
ø63	SSD-Q-R-63K	SSD-Q-H-63K	
ø80	SSD-Q-R-80K	SSD-Q-H-80K	
ø100	SSD-Q-R-100K	SSD-Q-H-100K	

*1: 25 is not available with head side position locking.

Dimensions (ø16) CAD

● Rod end male thread

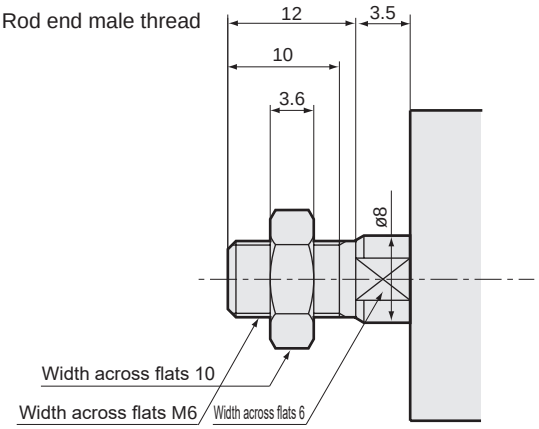

● SSD-Q(L)-16-R
(with switch, TO$^{H}/_{V}$, T5$^{H}/_{V}$, T2$^{H}/_{V}$, T3$^{H}/_{V}$, with rod side position locking)

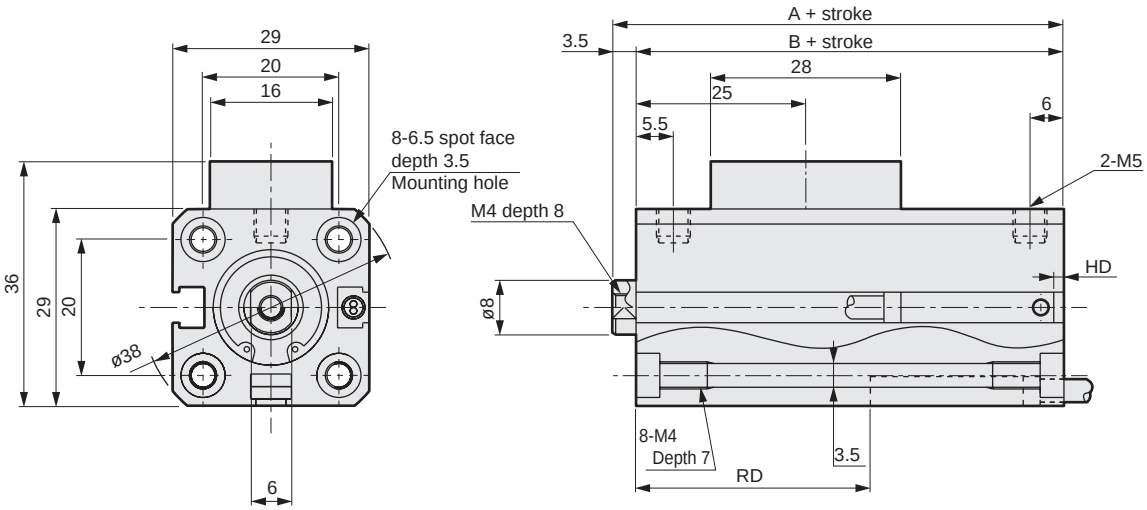

● SSD-Q(L)-16-H
(with switch, TO$^{H}/_{V}$, T5$^{H}/_{V}$, T2$^{H}/_{V}$, T3$^{H}/_{V}$, with head side position locking)

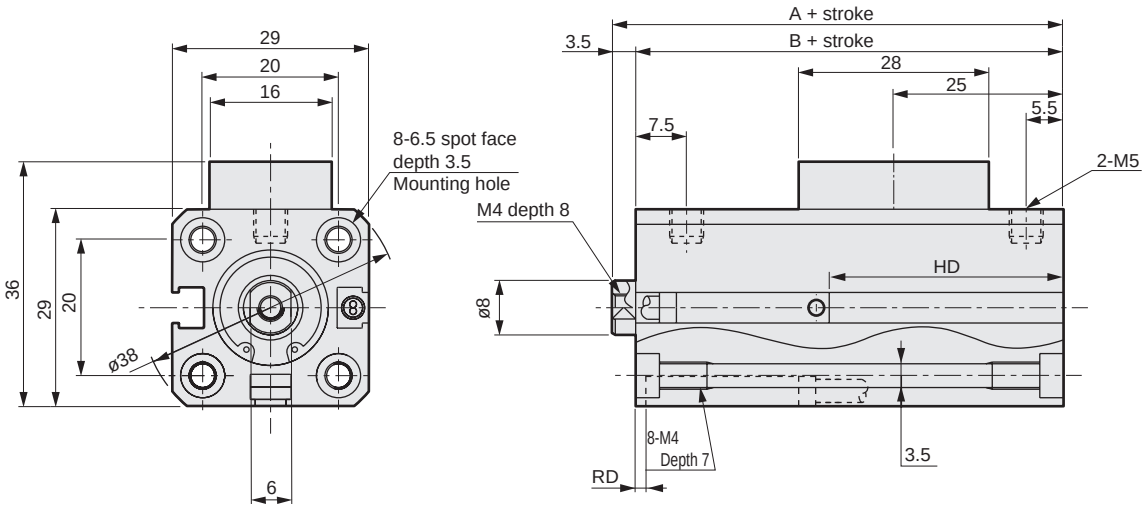

Code	No switch		Common dimensions with switch		With rod side position locking mechanism				With head side position locking mechanism			
					T2/T3/T2W/T3W		T0/T5		T2/T3/T2W/T3W		T0/T5	
Bore size (mm)	A *1	B *1	A *1	B *1	RD *2	HD *2	RD *2	HD *2	RD *2	HD *2	RD *2	HD *2
ø16	56.5	53	61.5	58	33	6.5	33	6.5	5	34.5	5	34.5

*1 : To calculate A+ stroke or B+ stroke when using a custom stroke, apply the custom stroke value as the stroke. (Example) For the custom stroke of 7 mm, calculate by directly including 7 mm.
*2 : HD and RD dimensions for 5 mm stroke differ from these dimensions according to the setting.
*3 : For dimensions of individual accessories, refer to pages 1108 to 1115.

SCP*3
CMK2
CMA2
SCM
SCG
SCA2
SCS2
CKV2
CAV2/COVP/N2
SSD2
SSG
SSD
CAT
MDC2
MVC
SMG
MSD/MSDG
FC*
STK
SRL3
SRG3
SRM3
SRT3
MRL2
MRG2
SM-25
ShkAbs
FJ
FK
Spd Contr
Ending

Dimensions (ø20, ø25) CAD

● Rod end male thread

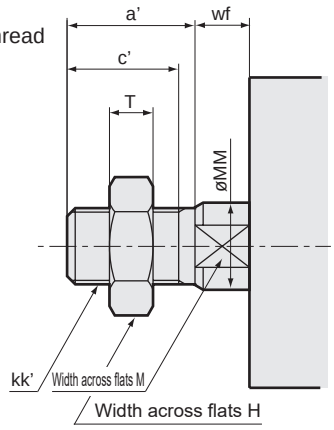

● SSD-Q(L)-20 to 25-R
(with switch, TO$^{H}/_{V}$, T5$^{H}/_{V}$, T2$^{H}/_{V}$, T3$^{H}/_{V}$, with rod side position locking)

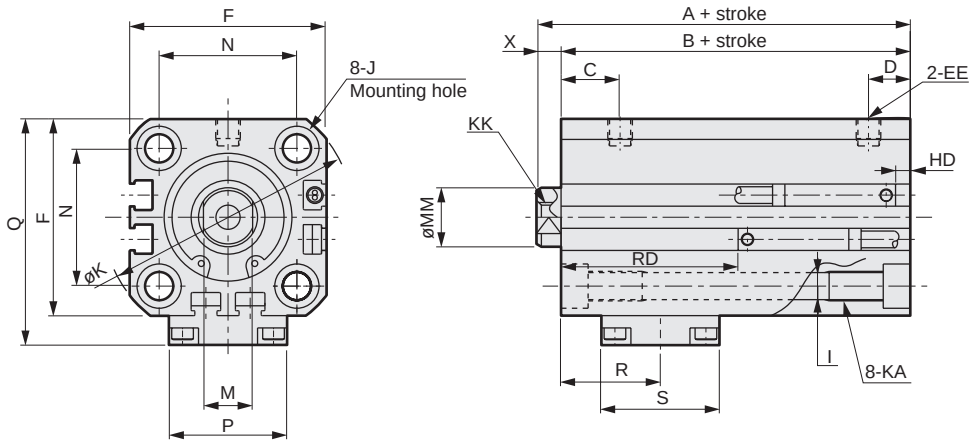

● SSD-Q(L)-20 to 25-H
(with switch, TO$^{H}/_{V}$, T5$^{H}/_{V}$, T2$^{H}/_{V}$, T3$^{H}/_{V}$, with head side position locking)

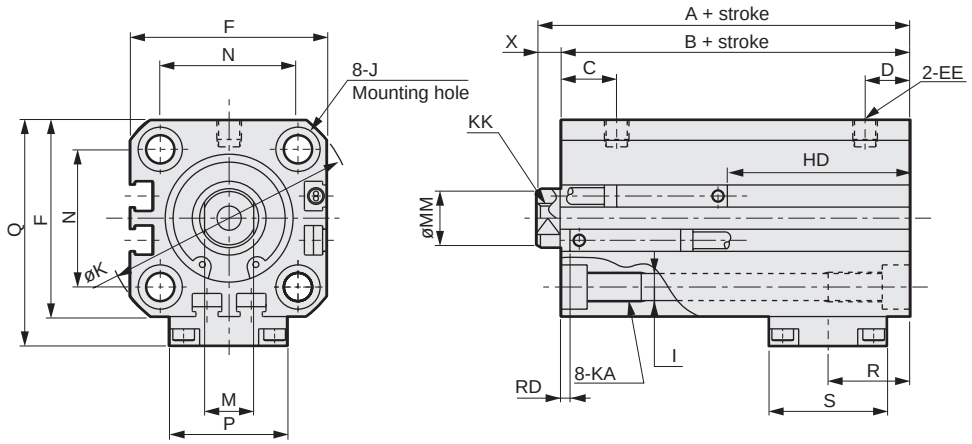

Code / Bore size (mm)	No switch A *1	No switch B *1	Common dimensions with switch A *1	B *1	C	D	EE	F	I	J *3	K
ø20	58	53.5	68	63.5	9.5	8.5	M5	36	5.5	9 spot face depth 5.5	47
ø25	63.5	58.5	73.5	68.5	12	10.5	M5	40	5.5	9 spot face depth 5.5	51

Code / Bore size (mm)	Common dimensions with switch KA *3	KK	M	MM	N	P	Q	S	X
ø20	M6 depth 11	M5 depth 7	8	10	25.5	21	43	23.2	4.5
ø25	M6 depth 11	M6 depth 12	10	12	28	24	46	24	5

Dimension code with switch / Bore size (mm)	With rod side position locking mechanism R	T2/T3 RD *2	T2/T3 HD *2	T0/T5 RD *2	T0/T5 HD *2	With head side position locking mechanism R	T2/T3/T2W/T3W RD *2	T2/T3/T2W/T3W HD *2	T0/T5 RD *2	T0/T5 HD *2
ø20	18.6	34.5	10	34.5	10	18	9.5	35	9.5	35
ø25	20.5	37.5	9.5	37.5	9.5	18.8	12.5	34.5	12.5	34.5

● Dimensions of rod end male thread part

Code / Bore size (mm)	a'	c'	H	kk'	M	MM	T	wf
ø20	14	12	13	M8	8	10	5	4.5
ø25	17.5	15	17	M10x1.25	10	12	6	5

*1 : To calculate A+ stroke or B+ stroke when using a custom stroke, apply the custom stroke value as the stroke.
(Example) For the custom stroke of 7 mm, calculate by directly including 7 mm.
*2 : HD and RD dimensions for 5 mm stroke differ from these dimensions according to the setting.
*3 : When longer than 150 mm stroke for ø25, there is no spot face J.
KA dimension for this case is 17.
*4 : For dimensions of individual accessories, refer to pages 1108 to 1115.

Dimensions (ø32 to ø100)

● SSD-Q(L)-32 to 100R
(with switch, TO$^{H}/_{V}$, T5$^{H}/_{V}$, T2$^{H}/_{V}$, T3$^{H}/_{V}$, with rod side position locking)

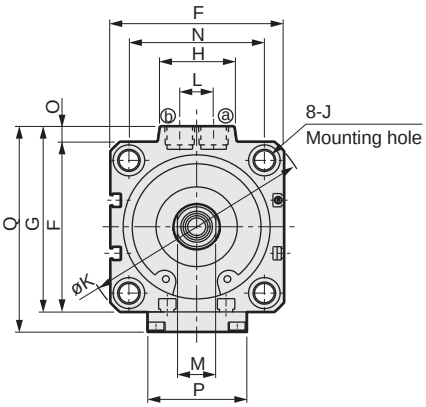

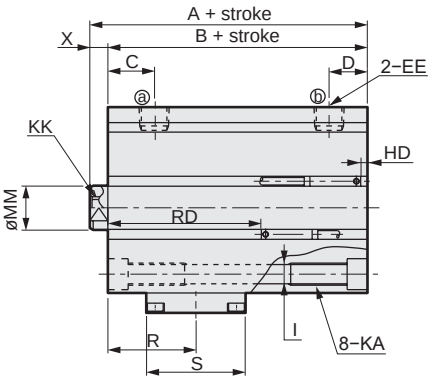

● Rod end male thread

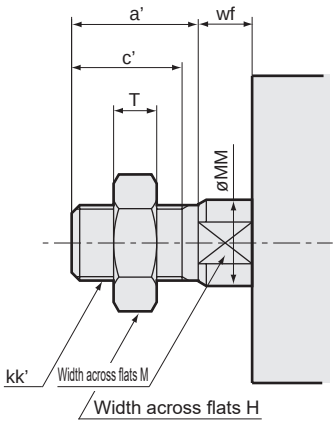

● SSD-Q(L)-32 to 100-H
(with switch, TO$^{H}/_{V}$, T5$^{H}/_{V}$, T2$^{H}/_{V}$, T3$^{H}/_{V}$, with head side position locking)

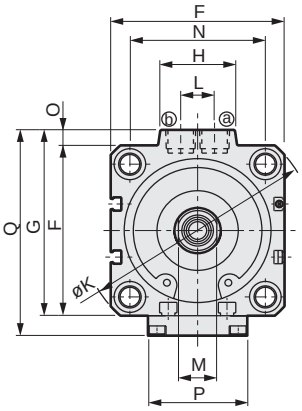

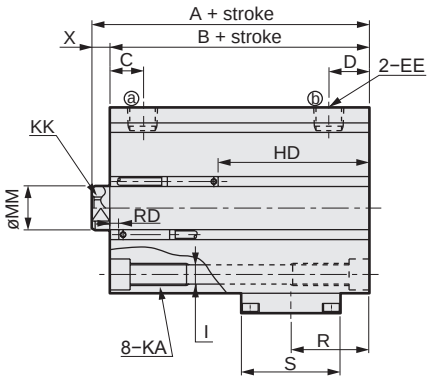

[Bore size ø100]

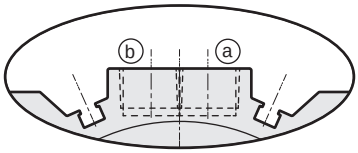

* Only for ø100, the port surface has switch grooves.

Code / Bore size (mm)	No switch A *1	No switch B *1	Common dimensions with switch A *1	B *1	C	D	EE	F	G	H	I	J *2	K
ø32	69	62	79	72	11	10	Rc1/8	45	49.5	24	5.5	9 spot face depth 5.5	60
ø40	83	76	93	86	14	11	Rc1/8	52	57	24	5.5	9 spot face depth 5.5	69
ø50	102.5	94.5	112.5	104.5	14.5	12.5	Rc1/4	64	71	33	6.9	11 spot face depth 6.5	86
ø63	108	100	118	110	18.5	17	Rc1/4	77	84	33	8.7	14 spot face depth 9	103
ø80	139	129	149	139	18	17	Rc3/8	98	104	38	10.5	17.5 spot face depth 11	132
ø100	141	129	151	139	23	21	Rc3/8	117	123.5	38	10.5	17.5 spot face depth 11	156

Code / Bore size (mm)	Common dimensions with switch KA *2	KK	L	M	MM	N	O	P	Q	S	X
ø32	M6 depth 11	M8 depth 13	10	14	16	34	4.5	24	58	38	7
ø40	M6 depth 11	M8 depth 13	10	14	16	40	5	24	65.5	38	7
ø50	M8 depth 13	M10 depth 15	15	17	20	50	7	44	79.5	43	8
ø63	M10 depth 25	M10 depth 15	15	17	20	60	7	47	92.5	47	8
ø80	M12 depth 28	M16 depth 21	15	22	25	77	6	47	112.5	47	10
ø100	M12 depth 28	M20 depth 27	15	27	30	94	6.5	55	133.5	55	12

Dimension code with switch / Bore size (mm)	With rod side position locking mechanism R	T2/T3/T2W/T3W RD *2	T2/T3/T2W/T3W HD *2	T0/T5 RD *2	T0/T5 HD *2	With head side position locking mechanism R	T2/T3/T2W/T3W RD *2	T2/T3/T2W/T3W HD *2	T0/T5 RD *2	T0/T5 HD *2
ø32	23.2	40.5	13	40.5	13	20.9	15.5	38	15.5	38
ø40	36.2	53	14	53	14	23.9	21	46	21	46
ø50	39.1	70.5	15	70.5	15	33.4	20.5	65	20.5	65
ø63	39	69	22.5	69	22.5	34.8	19	73	19	73
ø80	60	96	24	96	24	52	21.5	99	21.5	99
ø100	57	91	29.5	91	29.5	50	25.5	95	25.5	95

Table 1

Bore size	J	KA
ø32	-	17
ø40	-	17
ø50	-	20
ø63	-	34
ø80	-	35
ø100	-	35

● Dimensions of rod end male thread part

Code	a'	c'	H	kk'	M	MM	T	wf
ø32	23.5	20.5	22	M14x1.5	14	16	8	5
ø40	23.5	20.5	22	M14x1.5	14	16	8	5
ø50	28.5	26	27	M18x1.5	17	20	11	5
ø63	28.5	26	27	M18x1.5	17	20	11	5
ø80	35.5	32.5	32	M22x1.5	22	25	13	8
ø100	35.5	32.5	41	M26x1.5	27	30	16	8

*1 : To calculate A+ stroke or B+ stroke when using a custom stroke, apply the custom stroke value as the stroke.
(Example) For the custom stroke of 7 mm, calculate by directly including 7 mm.
*2 : When longer than 150 mm stroke for ø32 to ø63 or longer than 130 mm stroke for ø80 and ø100, there is no spot face J.
KA dimensions for this case are indicated in Table 1.
3 : Refer to page 1313 for HD, RD and protruding dimensions of the 2-color LED, off-delay, AC magnetic field proof, T1 and T8* switches.

* For dimensions of individual accessories, refer to pages 1108 to 1115.

SCP*3
CMK2
CMA2
SCM
SCG
SCA2
SCS2
CKV2
CAV2/COVP/N2
SSD2
SSG
SSD
CAT
MDC2
MVC
SMG
MSD/MSDG
FC*
STK
SRL3
SRG3
SRM3
SRT3
MRL2
MRG2
SM-25
ShkAbs
FJ
FK
Spd Contr
Ending

SCP*3
CMK2
CMA2
SCM
SCG
SCA2
SCS2
CKV2
CAV2/ COVP/N2
SSD2
SSG
SSD
CAT
MDC2
MVC
SMG
MSD/ MSDG
FC*
STK
SRL3
SRG3
SRM3
SRT3
MRL2
MRG2
SM-25
ShkAbs
FJ
FK
Spd Contr
Ending

Dimensions (with the 2-color LED, off-delay, AC magnetic field proof, T1* or T8* switch)

● SSD-QL-16-R (with switch, T2/3Y, T2J, T8, T2YD, T2YDT, T1, with rod side position locking)

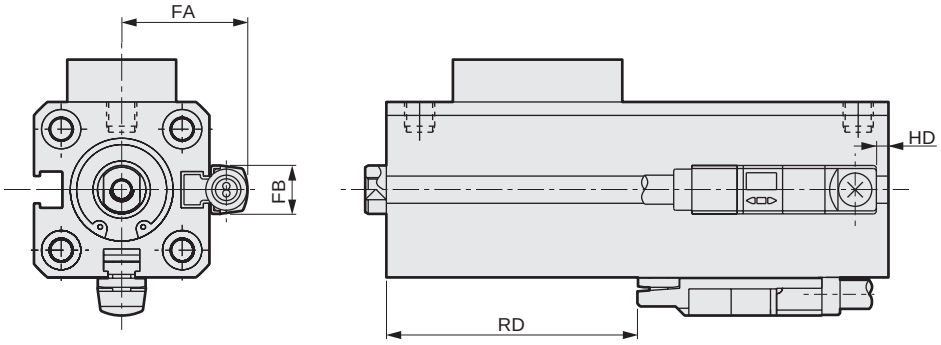

● SSD-QL-20 to 25-R (with switch, T2/3Y, T2J, T8, T2YD, T2YDT, T1, with rod side position locking)

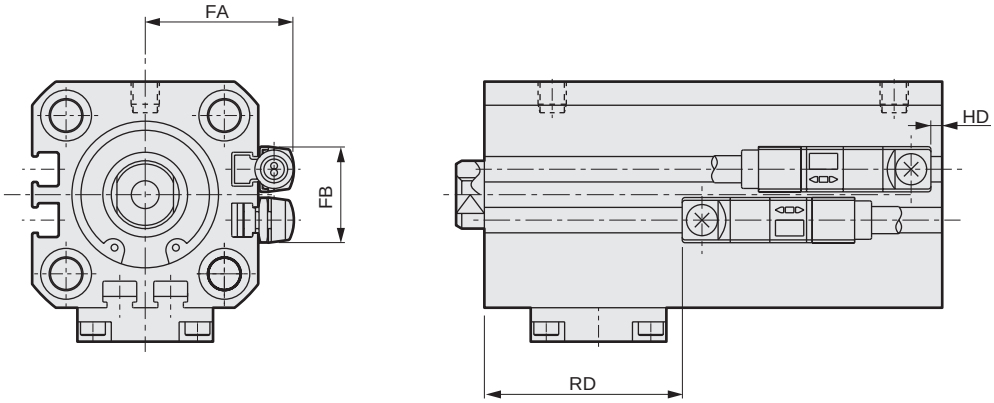

● SSD-QL-32 to 100-R (with switch, T2/3Y, T2J, T8, T2YD, T2YDT, T1, with rod side position locking)

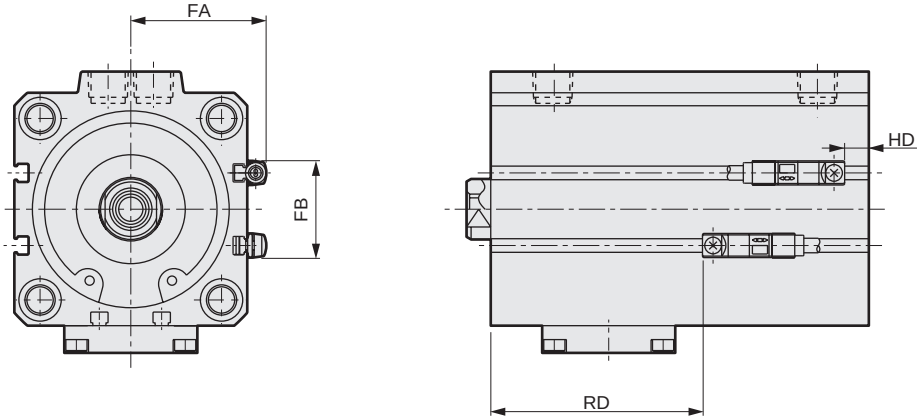

Code	T2/3Y, T2J				T2YD, T2YDT, T1				T8			
Bore size (mm)	FA	FB	RD	HD	FA	FB	RD	HD	FA	FB	RD	HD
ø16	20.8	8	31.5	5	25.8	8	31.5	5	-	-	-	-
ø20	24.3	16	33	8.5	29.3	16	33	8.5	24.3	16	28.5	4
ø25	26.3	17	36.5	8	31.3	17	36.5	8	26.3	17	31.5	3.5
ø32	28.8	24	39	11.5	33.8	24	39	11.5	28.8	24	34.5	7
ø40	32.3	31	51.5	12.5	37.3	31	51.5	12.5	32.3	31	47	8
ø50	38.3	32	69.5	13.5	43.3	32	69.5	13.5	38.3	32	64.5	9
ø63	44.8	32	67.5	21	49.8	32	67.5	21	44.8	32	63	16.5
ø80	55.3	32	94.5	22.5	60.3	32	94.5	22.5	55.3	32	90	18
ø100	64.8	32	89.5	28	69.8	32	89.5	28	64.8	32	85	23.5

Dimensions (with the 2-color LED, off-delay, AC magnetic field proof, T1* or T8* switch)

● SSD-QL-16-H (with switch, T2/3Y, T2J, T8, T2YD, T2YDT, T1, with head side position locking)

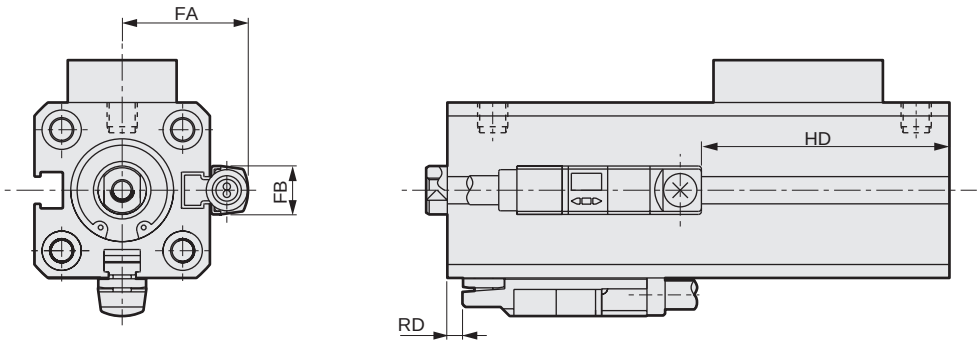

● SSD-QL-20 to 25-H (with switch, T2/3Y, T2J, T8, T2YD, T2YDT, T1, with head side position locking)

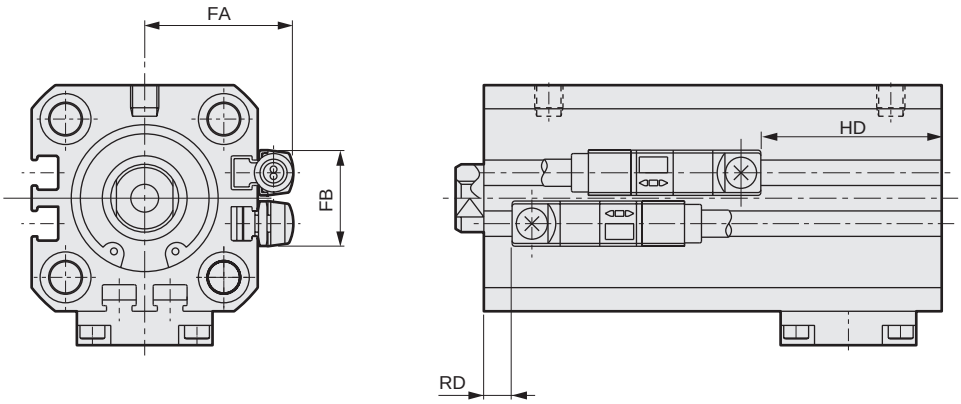

● SSD-QL-32 to 100-H (with switch, T2/3Y, T2J, T8, T2YD, T2YDT, T1, with head side position locking)

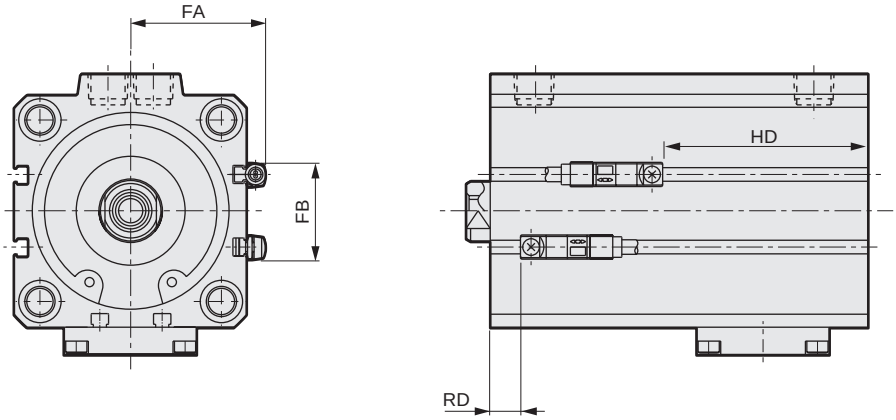

Code	T2/3Y, T2J				T2YD, T2YDT, T1				T8			
Bore size (mm)	FA	FB	RD	HD	FA	FB	RD	HD	FA	FB	RD	HD
ø16	20.8	8	3.5	33	25.8	8	3.5	33	20.8	8	-	-
ø20	24.3	16	8	33.5	29.3	16	8	33.5	24.3	16	3.5	29
ø25	26.3	17	11.5	33	31.3	17	11.5	33	26.3	17	6.5	28.5
ø32	28.8	24	14	36.5	33.8	24	14	36.5	28.8	24	9.5	32
ø40	32.3	31	20	44	37.3	31	20	44	32.3	31	15	40
ø50	38.3	32	19.5	63.5	43.3	32	19.5	63.5	38.3	32	14.5	59
ø63	44.8	32	17.5	71.5	49.8	32	17.5	71.5	44.8	32	13	67
ø80	55.3	32	20	97.5	60.3	32	20	97.5	55.3	32	15.5	93
ø100	64.8	32	24	93.5	69.8	32	24	93.5	64.8	32	19.5	89

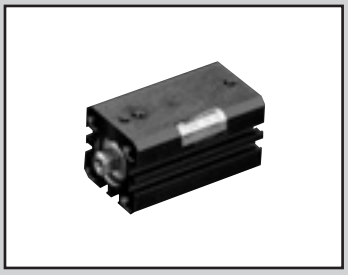

Compact cylinder double acting/fine speed

SSD-F/SSD-KF Series

● Bore size: ø12/ø16/ø20/ø25/ø32/ø40/ø50/ø63/ø80/ø100

JIS symbol

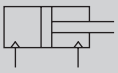

RoHS CAD

Specifications

1 MPa = 10 bar

Item	SSD-F, SSD-LF (with switch)										SSD-KF, SSD-KLF (with switch)									
Bore size mm	ø12	ø16	ø20	ø25	ø32	ø40	ø50	ø63	ø80	ø100	ø12	ø16	ø20	ø25	ø32	ø40	ø50	ø63	ø80	ø100
Actuation	Double acting																			
Working fluid	Compressed air																			
Max. working pressure MPa	1.0 (≈150 psi, 10 bar)																			
Min. working pressure MPa	0.1 (≈15 psi, 1 bar)							0.05 (≈7.3 psi)			0.1 (≈15 psi, 1 bar)							0.05 (≈7.3 psi)		
Proof pressure MPa	1.6 (≈230 psi, 16 bar)																			
Ambient temperature °C	5 (41°F) to 60 (140°F)																			
Port size	M5				Rc1/8		Rc1/4		Rc3/8		M5				Rc1/8		Rc1/4		Rc3/8	
Stroke tolerance mm	+1.0 0										+2.0 0									
Working piston speed mm/s	1 to 200																			
Cushion	None										Rubber cushion									
Lubrication	Not available																			
Allowable absorbed energy J	0.004	0.01	0.016	0.021	0.025	0.092	0.1	0.12	0.27	0.56	0.04	0.09	0.16	0.16	0.40	0.63	0.98	1.56	2.51	3.92

Stroke

Model No.	Bore size (mm)	Standard stroke (mm)	Max. stroke (mm)	Min. stroke (mm)
SSD-F SSD-LF	ø12,ø16,ø20	5, 10, 15, 20, 25, 30	30	1
	ø25,ø32,ø40,ø50	5, 10, 15, 20, 25, 30, 40, 50	50	
	ø63,ø80,ø100	5, 10, 20, 30, 40, 50		
SSD-KF SSD-KLF	ø12, ø16, ø20	5, 10, 15, 20, 25, 30, 40, 50	100	
	ø25,ø32,ø40,ø50	10, 15, 20, 25, 30, 40, 50, 60, 70, 80, 90, 100	150	
	ø63,ø80,ø100	10, 20, 30, 40, 50, 60, 70, 80, 90, 100	200	

*1 : The custom stroke is available in 1 mm increments. However, the total length is the same as that of the next longer standard stroke.
*2 : When using the type with a switch, refer to the table below.
*3 : Refer to pages 1320 and 1321 for the min. stroke with mounting brackets LB and LB2.

Number of installed switches and min. stroke (mm)

● SSD-LF

Switch quantity	SSD-LF					SSD-KLF				
	1	2	3	4	5	1	2	3	4	5
Switch model No. / Bore size (mm)	T*	T*	T*	T*	T*	T*	T*	T*	T*	T*
ø12	5	5	25	-	-	5	5	25	-	-
ø16	5	5	25	-	-	5	5	25	-	-
ø20	5	5	-	-	-	5	5	35	50	65
ø25	5	5	35	50	-	5	5	35	50	65
ø32	5	5	35	50	-	5	5	35	50	65
ø40	5	5	35	50	-	5	5	35	50	65
ø50	5	5	35	50	-	5	5	35	50	65
ø63	5	5	35	50	-	5	5	35	50	65
ø80	5	5	35	50	-	5	5	35	50	65
ø100	5	5	35	50	-	5	5	35	50	65

Note: Less than 10 mm with the 2-color LED, off-delay, AC magnetic field proof, T1* or T8* switch is not available.

Switch specifications

● 1-color/2-color LED/for AC magnetic field proof

Item	2-wire proximity				3-wire proximity				2-wire reed							2-wire proximity
	T1H/ T1V	T2H/T2V/ T2JH/T2JV	T2YH/ T2YV	T2WH/ T2WV	T3H/ T3V	T3PH/ T3PV	T3YH/ T3YV	T3WH/ T3WV	T0H/T0V		T5H/T5V		T8H/T8V			T2YD (*4) T2YDT
Applications	For programmable controller, relay, compact solenoid valve	Dedicated for programmable controller			For programmable controller, relay				For programmable controller, relay		For programmable controller, relay (no lamp), serial		For programmable controller, relay			Dedicated for programmable controller
Output method	-				NPN output	PNP output	NPN output	NPN output	-							
Pwr. supp. V.	-				10 to 28 VDC				-							
Load voltage	85 to 265 VAC	10 to 30 VDC		24 VDC ±10%	30 VDC or less				12/24 VDC	100/110 VAC	5/12/24 VDC	100/110 VAC	12/24 VDC	110 VAC	220 VAC	24 VDC ±10%
Load current	5 to 100 mA	5 to 20 mA (*3)			100 mA or less		50 mA or less		5 to 50 mA	7 to 20 mA	50 mA or less	20 mA or less	5 to 50 mA	7 to 20 mA	7 to 10 mA	5 to 20 mA
Indicator	LED (Lit when ON)	LED (Lit when ON)	Red/green LED (Lit when ON)	Red/green LED (Lit when ON)	LED (Lit when ON)	Yellow LED (Lit when ON)	Red/green LED (Lit when ON)	Red/green LED (Lit when ON)	LED (Lit when ON)		No indicator lamp		LED (Lit when ON)			Red/green LED (Lit when ON)
Leakage current	≤ 1 mA at 100 VAC, ≤ 2 mA at 200 VAC	1 mA or less			10 μA or less				0 mA							1 mA or less
Weight g	1 m:33 3 m:87 5 m:142	1 m:18 3 m:49 5 m:80	1 m:33 3 m:87 5 m:142	1 m:18 3 m:49 5 m:80	1 m:18 3 m:49 5 m:80		1 m:33 3 m:87 5 m:142	1 m:18 3 m:49 5 m:80	1 m:18 3 m:49 5 m:80				1 m:33 3 m:87 5 m:142			1 m:61 3 m:166 5 m:272

*1 : Refer to Ending Page 1 for detailed switch specifications and dimensions.
*2 : Switches other than the above models, such as switches with connectors, are also available. Refer to Ending Page 1.
*3 : The max. load current is 20 mA at 25°C. The current is lower than 20 mA if the operating ambient temperature around the switch is higher than 25°C. (5 to 10 mA at 60°C)
*4 : Switch for AC magnetic field (T2YD/T2YDT) cannot be used in DC magnetic field.

Cylinder weight

Same as SSD Series (double acting/single rod) on page 1095 and SSD-K Series (double acting/high load) on page 1119.

Theoretical thrust table

(Unit: N)

Bore size (mm)	Operating direction	Working pressure MPa 0.05	0.1	0.15	0.2	0.3	0.4	0.5	0.6	0.7	0.8	0.9	1.0
ø12	Push	-	11.3	17.0	22.6	33.9	45.2	56.5	67.9	79.2	90.5	$1.02x10^2$	$1.13x10^2$
	Pull	-	8.48	12.7	17.0	25.4	33.9	42.4	50.9	59.4	67.9	76.3	84.8
ø16	Push	-	20.1	30.2	40.2	60.3	80.4	$1.01x10^2$	$1.21x10^2$	$1.41x10^2$	$1.61x10^2$	$1.81x10^2$	$2.01x10^2$
	Pull	-	15.1	22.6	30.2	45.2	60.3	75.4	90.5	$1.06x10^2$	$1.21x10^2$	$1.36x10^2$	$1.51x10^2$
ø20	Push	-	31.4	47.1	62.8	94.2	$1.26x10^2$	$1.57x10^2$	$1.88x10^2$	$2.20x10^2$	$2.51x10^2$	$2.83x10^2$	$3.14x10^2$
	Pull	-	23.6	35.3	47.1	70.7	94.2	$1.18x10^2$	$1.41x10^2$	$1.65x10^2$	$1.88x10^2$	$2.12x10^2$	$2.36x10^2$
ø25	Push	-	49.1	73.6	98.2	$1.47x10^2$	$1.96x10^2$	$2.45x10^2$	$2.95x10^2$	$3.44x10^2$	$3.93x10^2$	$4.42x10^2$	$4.91x10^2$
	Pull	-	37.8	56.7	75.6	$1.13x10^2$	$1.51x10^2$	$1.89x10^2$	$2.27x10^2$	$2.64x10^2$	$3.02x10^2$	$3.40x10^2$	$3.78x10^2$
ø32	Push	-	80.4	$1.21x10^2$	$1.61x10^2$	$2.41x10^2$	$3.22x10^2$	$4.02x10^2$	$4.83x10^2$	$5.63x10^2$	$6.43x10^2$	$7.24x10^2$	$8.04x10^2$
	Pull	-	60.3	90.5	$1.21x10^2$	$1.81x10^2$	$2.41x10^2$	$3.02x10^2$	$3.62x10^2$	$4.22x10^2$	$4.83x10^2$	$5.43x10^2$	$6.03x10^2$
ø40	Push	-	$1.26x10^2$	$1.88x10^2$	$2.51x10^2$	$3.77x10^2$	$5.03x10^2$	$6.28x10^2$	$7.54x10^2$	$8.80x10^2$	$1.01x10^3$	$1.13x10^3$	$1.26x10^3$
	Pull	-	$1.06x10^2$	$1.58x10^2$	$2.11x10^2$	$3.17x10^2$	$4.22x10^2$	$5.28x10^2$	$6.33x10^2$	$7.39x10^2$	$8.44x10^2$	$9.50x10^2$	$1.06x10^3$
ø50	Push	-	$1.96x10^2$	$2.95x10^2$	$3.93x10^2$	$5.89x10^2$	$7.85x10^2$	$9.82x10^2$	$1.18x10^3$	$1.37x10^3$	$1.57x10^3$	$1.77x10^3$	$1.96x10^3$
	Pull	-	$1.65x10^2$	$2.47x10^2$	$3.30x10^2$	$4.95x10^2$	$6.60x10^2$	$8.25x10^2$	$9.90x10^2$	$1.15x10^3$	$1.32x10^3$	$1.48x10^3$	$1.65x10^3$
ø63	Push	$1.56x10^2$	$3.12x10^2$	$4.68x10^2$	$6.23x10^2$	$9.35x10^2$	$1.25x10^3$	$1.56x10^3$	$1.87x10^3$	$2.18x10^3$	$2.49x10^3$	$2.81x10^3$	$3.12x10^3$
	Pull	$1.40x10^2$	$2.80x10^2$	$4.20x10^2$	$5.61x10^2$	$8.41x10^2$	$1.12x10^3$	$1.40x10^3$	$1.68x10^3$	$1.96x10^3$	$2.24x10^3$	$2.52x10^3$	$2.80x10^3$
ø80	Push	$2.51x10^2$	$5.03x10^2$	$7.54x10^2$	$1.01x10^3$	$1.51x10^3$	$2.01x10^3$	$2.51x10^3$	$3.02x10^3$	$3.52x10^3$	$4.02x10^3$	$4.52x10^3$	$5.03x10^3$
	Pull	$2.27x10^2$	$4.54x10^2$	$6.80x10^2$	$9.07x10^2$	$1.36x10^3$	$1.81x10^3$	$2.27x10^3$	$2.72x10^3$	$3.17x10^3$	$3.63x10^3$	$4.08x10^3$	$4.54x10^3$
ø100	Push	$3.93x10^2$	$7.85x10^2$	$1.18x10^3$	$1.57x10^3$	$2.36x10^3$	$3.14x10^3$	$3.93x10^3$	$4.71x10^3$	$5.50x10^3$	$6.28x10^3$	$7.07x10^3$	$7.85x10^3$
	Pull	$3.57x10^2$	$7.15x10^2$	$1.07x10^3$	$1.43x10^3$	$2.14x10^3$	$2.86x10^3$	$3.57x10^3$	$4.29x10^3$	$5.00x10^3$	$5.72x10^3$	$6.43x10^3$	$7.15x10^3$

How to order

● No switch (without magnet for switch)

SSD-F - 12 ( ) - 5 ——— N - LB - I

● With switch (built-in magnet for switch)

SSD-LF - 12 ( ) - 5 - T0H - R - N - LB - I

● 2-color LED/off-delay, with T1* switch (double acting/single rod ø12/ø16 only) (built-in magnet for switch)

SSD-L1F - 12 ( ) - 10 - T2YH - R - N - LB - I

Ⓐ Model No.
Ⓑ Bore size
Ⓒ Port thread
Ⓓ Stroke
Ⓔ Switch model No. *1 *2 *3 *10
Ⓕ Switch quantity
Ⓖ Option *4
Ⓗ Mounting bracket *5 *6
Ⓘ Accessory *7

Precautions for model No. selection

*1 : Switches other than Ⓔ Switch model No. are also available. (Made to order) Refer to Ending Page 1 for details.
*2 : An AC magnetic field proof switch cannot be installed on ø12 and ø16.
3 : T8 switch cannot be mounted in products with bore sizes as below.
·SSD-L1F: ø12 to ø32
·SSD-KLF: ø12, ø16
*4 : Piston rod of ø12 to ø25 is stainless steel as standard. C-snap ring is stainless steel instead of steel. The rod end male thread nut is stainless steel.
*5 : The mounting bracket is included at shipment.
*6 : The projection dimension of piston rod WF when LB2 or FA is selected is different from that of the standard. Refer to the dimensions on pages 1109 and 1110. The number of the specified protruding dimension will be added at the end of the model No. printed on the metal plate on the body.
*7 : "I" and "Y" cannot be selected together.
*8 : Refer to Ending Page 85 for custom specifications of rod end form.
*9 : Refer to pages 1086 and 1089 for combinations of variations/options.
*10 : Switches are shipped with the product. Contact CKD if assembling before shipment is necessary.

[Example of model No.]

SSD-LF-12-5-T0H-R-N

Model: Compact cylinder, fine speed

Ⓐ Model No.	: Double acting/single rod
Ⓑ Bore size	: ø12 mm
Ⓒ Port thread	: Rc thread
Ⓓ Stroke	: 5 mm
Ⓔ Switch model No.	: Reed switch T0H, lead wire 1 m
Ⓕ Switch quantity	: 1 on rod side
Ⓖ Option	: Rod end male thread

How to order switch

SW - T0H

Switch model No. (Item Ⓔ above)

Code	Description
Ⓐ Model No.	
SSD-F	Double acting/single rod
SSD-LF	Double acting/single rod/with switch
SSD-L1F	ø12, ø16 2-color LED, off-delay, with T1* switch
SSD-KF	Double acting/high load
SSD-KLF	Double acting/high load/with switch
Ⓑ Bore size (mm)	
12	ø12
16	ø16
20	ø20
25	ø25
32	ø32
40	ø40
50	ø50
63	ø63
80	ø80
100	ø100
Ⓒ Port thread	
Blank	Rc thread
NN	NPT thread (ø32 and over) (made-to-order product)
GN	G thread (ø32 and over) (made-to-order product)
Ⓓ Stroke (mm)	
Refer to the stroke table on the following page.	

Ⓔ Switch model No.

Axial lead wire	Radial lead wire	Contact	Voltage AC	Voltage DC	Indicator	Lead wire
TOH*	T0V*	Reed	●	●	1-color LED	2-wire
T5H*	T5V*	Reed	●	●	No indicator lamp	2-wire
T8H*	T8V*	Reed	●	●	1-color LED	2-wire
T1H*	T1V*	Proximity	●		1-color LED	2-wire
T2H*	T2V*	Proximity		●	1-color LED	2-wire
T3H*	T3V*	Proximity		●	1-color LED	3-wire
T3PH*	T3PV*	Proximity		●	1-color LED	3-wire
T2WH*	T2WV*	Proximity		●	2-color LED	2-wire
T2YH*	T2YV*	Proximity		●	2-color LED	2-wire
T3WH*	T3WV*	Proximity		●	2-color LED	3-wire
T3YH*	T3YV*	Proximity		●	2-color LED	3-wire
T2JH*	T2JV*	Proximity		●	1-color LED off-delay	2-wire
T2YD*	-	Proximity		●	2-color LED AC magnetic field	2-wire
T2YDT*	-	Proximity		●	2-color LED AC magnetic field	2-wire
T2HR3	T2VR3	Proximity		●	1-color LED (bend resist lead wire specs)	2-wire

* Lead wire length	
Blank	1 m (standard)
3	3 m (option)
5	5 m (option)
Ⓕ Switch quantity	
R	1 on rod side
H	1 on head side
D	2
Ⓖ Option	
Blank	Rod end female thread
N	Rod end male thread
M	Piston rod material (stainless steel)
Ⓗ Mounting bracket	
LB	Axial foot
LB2	Axial foot (compact)
CB	Clevis bracket (pin and snap ring included)
CB2	Clevis bracket (compact) (pin and snap ring included)
FA	Rod side flange
FB	Head side flange
Ⓘ Accessory (available when rod end male thread "N" is selected)	
I	Rod eye
I2	Rod eye (compact)
Y	Rod clevis (pin and snap ring included)
Y2	Rod clevis (compact) (pin and snap ring included)

[Stroke table]

● SSD-F

Stroke (mm)		Applicable bore size									
		ø12	ø16	ø20	ø25	ø32	ø40	ø50	ø63	ø80	ø100
Standard stroke	5	●	●	●	●	●	●	●	●	●	●
	10	●	●	●	●	●	●	●	●	●	●
	15	●	●	●	●	●	●	●			
	20	●	●	●	●	●	●	●	●	●	●
	25	●	●	●	●	●	●	●			
	30	●	●	●	●	●	●	●	●	●	●
	40				●	●	●	●	●	●	●
	50				●	●	●	●	●	●	●
Min. stroke (mm) *1		1									
Max. stroke (mm)		30			50						
Custom stroke *2		In 1 mm increments									

1 : Less than 5 mm with 1-color LED switch and less than 10 mm with the 2-color LED, off-delay, AC strong magnetic field proof, T1 or T8* switch are not available.
Refer to page 1172 for the number of installed switches and the min. stroke.
*2 : The total length is the same as that of the next longer standard stroke.
*3 : Refer to pages 1320 and 1321 for the min. stroke with mounting brackets LB and LB2.

● SSD-KF

Stroke (mm)		Applicable bore size									
		ø12	ø16	ø20	ø25	ø32	ø40	ø50	ø63	ø80	ø100
Standard stroke	5	●	●	●	●	●	●	●			
	10	●	●	●	●	●	●	●	●	●	●
	15	●	●	●	●	●	●	●			
	20	●	●	●	●	●	●	●	●	●	●
	25	●	●	●	●	●	●	●			
	30	●	●	●	●	●	●	●	●	●	●
	40	●	●	●	●	●	●	●	●	●	●
	50	●	●	●	●	●	●	●	●	●	●
	60				●	●	●	●	●	●	●
	70				●	●	●	●	●	●	●
	80				●	●	●	●	●	●	●
	90				●	●	●	●	●	●	●
	100				●	●	●	●	●	●	●
Min. stroke (mm) *1		1									
Max. stroke (mm)		100			150				200		
Custom stroke *2		In 1 mm increments									

*1 : Less than 5 mm for 1-color LED and stroke less than 10 mm for the 2-color LED with AC magnetic field proof switch are not available.
Refer to page 1172 for the number of installed switches and the min. stroke.
*2 : The total length is the same as that of the next longer standard stroke.
*3 : Refer to pages 1320 and 1321 for the min. stroke with mounting brackets LB and LB2.

Clean-room specifications (Catalog No. CB-033SA)

● Anti-dust generation structure for use in cleanrooms

SSD-F P7*
SSD-KF..... P7*

How to order mounting bracket

Bore size (mm) / Mounting bracket	ø20	ø25	ø32	ø40	ø50	ø63	ø80	ø100
Foot (LB)	SSD-LB-20	SSD-LB-25	SSD-LB-32	SSD-LB-40	SSD-LB-50	SSD-LB-63	SSD-LB-80	SSD-LB-100
Foot (LB2)	SSD-LB2-20	SSD-LB2-25	SSD-LB2-32	SSD-LB2-40	SSD-LB2-50	SSD-LB2-63	SSD-LB2-80	SSD-LB2-100
Flange (FA/FB)	SSD-FA-20	SSD-FA-25	SSD-FA-32	SSD-FA-40	SSD-FA-50	SSD-FA-63	SSD-FA-80	SSD-FA-100
Clevis bracket (CB)	SSD-CB-20	SSD-CB-25	SSD-CB-32	SSD-CB-40	SSD-CB-50	SSD-CB-63	SSD-CB-80	SSD-CB-100
Clevis bracket (CB2)	SSD-CB2-20	SSD-CB2-25	SSD-CB2-32	SSD-CB2-40	SSD-CB2-50	SSD-CB2-63	SSD-CB2-80	SSD-CB2-100

*1: The foot mounting bracket is provided as 2 pcs./set.

Dimensions

Same as SSD Series (double acting/single rod) and SSD-K Series (double acting/high load).
Refer to pages 1103 to 1105 and 1122 to 1125.

SCP*3
CMK2
CMA2
SCM
SCG
SCA2
SCS2
CKV2
CAV2/COVP/N2
SSD2
SSG
SSD
CAT
MDC2
MVC
SMG
MSD/MSDG
FC*
STK
SRL3
SRG3
SRM3
SRT3
MRL2
MRG2
SM-25
ShkAbs
FJ
FK
Spd Contr
Ending

Cylinder weight table (the weight of the switches is when there are 2 cylinder switches.)

● SSD-F

(Unit: g)

Stroke (mm)	5		10		15		20		25		30		40		50	
Bore size (mm)	No switch	With switch	No switch	With switch	No switch	With switch	No switch	With switch	No switch	With switch	No switch	With switch	No switch	With switch	No switch	With switch
ø12	36	86	44	86	53	95	61	103	70	112	72	114	—	—	—	—
ø16	48	104	59	104	69	114	80	125	91	136	102	147	—	—	—	—
ø20	63	118	75	150	88	163	101	176	113	188	126	201	—	—	—	—
ø25	87	178	102	193	118	209	134	225	150	241	165	256	197	288	228	319
ø32	122	236	144	258	166	280	188	302	209	323	231	345	275	389	318	432
ø40	183	326	210	353	236	379	263	406	290	433	316	459	369	512	422	565
ø50	299	493	341	535	383	577	425	619	467	661	510	704	594	788	678	872
ø63	452	731	507	786	—	—	617	896	—	—	727	1006	838	1117	948	1227
ø80	841	1254	928	1341	—	—	1101	1514	—	—	1274	1687	1448	1861	1621	2034
ø100	1319	1886	1433	2000	—	—	1660	2227	—	—	1888	2455	2115	2682	2343	2910

● SSD-KF

(Unit: g)

Stroke (mm)	5		10		15		20		25		30		40		50		60		70		80		90		100	
Bore size (mm)	No switch	Switch	No switch	Switch	No switch	Switch	No switch	Switch	No switch	Switch	No switch	Switch	No switch	Switch	No switch	Switch	No switch	Switch	No switch	Switch	No switch	Switch	No switch	Switch	No switch	Switch
ø12	44	86	53	95	61	103	70	112	78	121	87	129	104	146	121	163	138	180	155	197	172	214	189	231	206	248
ø16	59	104	69	114	80	125	91	136	102	147	113	158	135	169	157	191	179	213	201	235	223	257	245	279	267	301
ø20	75	150	88	163	101	176	113	188	126	201	138	213	163	238	188	263	213	288	238	313	263	338	288	363	313	388
ø25	—	—	118	209	134	225	150	241	165	256	182	273	214	305	246	337	278	369	310	401	342	433	374	465	406	497
ø32	—	—	188	302	209	323	231	345	253	367	275	389	318	432	361	475	404	518	447	561	490	604	533	647	576	690
ø40	—	—	263	406	290	433	316	459	342	485	369	512	422	565	475	618	528	671	581	724	634	777	687	830	740	883
ø50	—	—	425	619	467	661	510	704	553	747	594	788	678	872	762	956	846	1040	930	1124	1014	1208	1098	1292	1182	1376
ø63	—	—	617	896	—	—	727	1006	—	—	838	1117	948	1227	1058	1337	1168	1447	1278	1557	1388	1667	1498	1777	1608	1887
ø80	—	—	1101	1514	—	—	1274	1687	—	—	1448	1861	1621	2034	1794	2207	1967	2380	2140	2553	2313	2726	2486	2899	2659	3072
ø100	—	—	1660	2227	—	—	1888	2455	—	—	2115	2682	2343	2910	2571	3138	2799	3366	3027	3594	3255	3822	3483	4050	3711	4278

Stroke (mm)	110		120		130		140		150		160		170		180		190		200	
Bore size (mm)	No switch	Switch	No switch	Switch	No switch	Switch	No switch	Switch	No switch	Switch	No switch	Switch	No switch	Switch	No switch	Switch	No switch	Switch	No switch	Switch
ø25	438	529	470	561	502	593	534	625	566	657	—	—	—	—	—	—	—	—	—	—
ø32	619	733	662	776	705	819	748	862	791	905	—	—	—	—	—	—	—	—	—	—
ø40	793	936	846	989	899	1042	952	1095	1005	1148	—	—	—	—	—	—	—	—	—	—
ø50	1266	1460	1350	1544	1434	1628	1518	1712	1602	1796	—	—	—	—	—	—	—	—	—	—
ø63	1718	1997	1828	2107	1938	2217	2048	2327	2158	2437	2268	2547	2378	2657	2488	2767	2598	2877	2708	2987
ø80	2832	3245	3005	3418	3178	3591	3351	3764	3524	3937	3697	4110	3870	4283	4043	4456	4216	4629	4389	4802
ø100	3939	4506	4167	4734	4395	4962	4623	5190	4851	5418	5079	5646	5307	5874	5535	6102	5763	6830	5991	6558

Measurement data

Measuring method

SSD-F-16-30

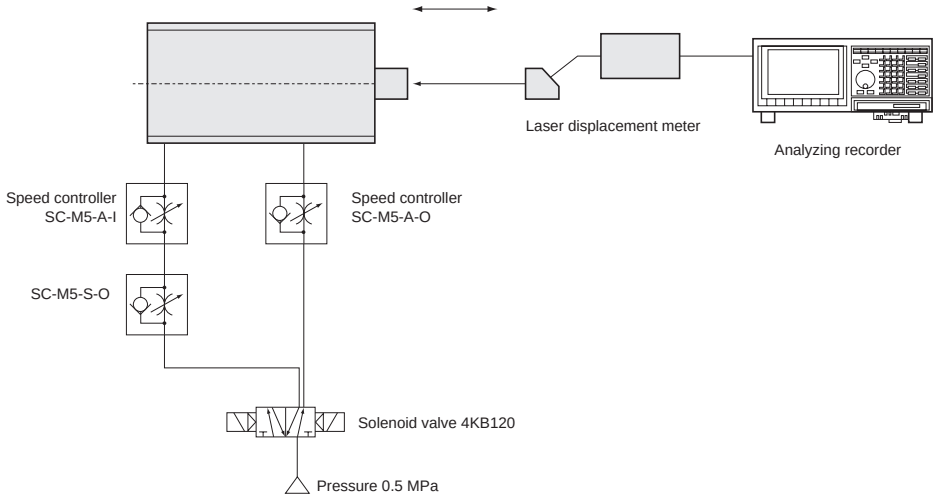

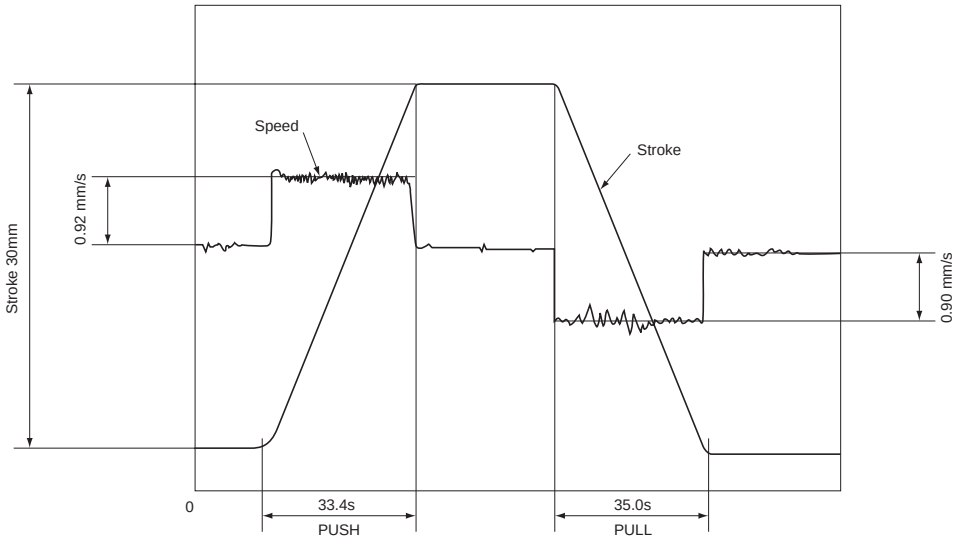

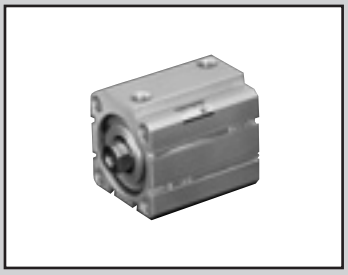

Compact cylinder double acting/low speed

SSD-O Series

● Bore size: ø12/ø16/ø20/ø25/ø32/ø40/ø50/ø63/ø83/ø100

JIS symbol

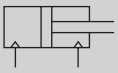

RoHS CAD

Specifications

Item	SSD-O SSD-OL (with switch)									
Bore size mm	ø12	ø16	ø20	ø25	ø32	ø40	ø50	ø63	ø80	ø100
Actuation	Double acting									
Working fluid	Compressed air									
Max. working pressure MPa	1.0 (≈150 psi, 10 bar)									
Min. working pressure MPa	0.1 (≈15 psi, 1 bar)							0.05 (≈7.3 psi, 0.5 bar)		
Proof pressure MPa	1.6 (≈230 psi, 16 bar)									
Ambient temperature °C	-10 (14°F) to 60 (140°F) (no freezing)									
Port size	M5				Rc1/8		Rc1/4		Rc3/8	
Stroke tolerance mm	+1.0 0									
Working piston speed mm/s	10 to 200									
Cushion	None									
Lubrication	Not available									
Allowable absorbed energy J	0.004	0.01	0.016	0.021	0.025	0.092	0.1	0.12	0.27	0.56

Stroke

Bore size (mm)	Standard stroke (mm)	Max. stroke (mm)	Min. stroke (mm)
ø12	5, 10, 15, 20, 25, 30	30	1
ø16			
ø20			
ø25	5, 10, 15, 20, 25, 30, 40, 50	50	
ø32			
ø40			
ø50			
ø63	5, 10, 20, 30, 40, 50	50	
ø80			
ø100			

*1 : The custom stroke is available in 1 mm increments. However, the total length is the same as that of the next longer standard stroke.
*2 : When using the type with a switch, refer to the table below.
*3 : Refer to pages 1320 and 1321 for the min. stroke with mounting brackets LB and LB2.

Number of installed switches and min. stroke (mm)

Switch quantity	1	2	3	4	5
Switch model No. / Bore size (mm)	T*	T*	T*	T*	T*
ø12	5	5	25	-	-
ø16	5	5	25	-	-
ø20	5	5	-	-	-
ø25	5	5	35	50	-
ø32	5	5	35	50	-
ø40	5	5	35	50	-
ø50	5	5	35	50	-
ø63	5	5	35	50	-
ø80	5	5	35	50	-
ø100	5	5	35	50	-

Note: Less than 10 mm with the 2-color LED, off-delay, AC magnetic field proof, T1* or T8* switch is not available.

Switch specifications

● 1-color/2-color LED/for AC magnetic field proof

Item	2-wire proximity				3-wire proximity				2-wire reed							2-wire proximity
	T1H/ T1V	T2H/T2V/ T2JH/T2JV	T2YH/ T2YV	T2WH/ T2WV	T3H/ T3V	T3PH/ T3PV	T3YH/ T3YV	T3WH/ T3WV	T0H/T0V		T5H/T5V		T8H/T8V			T2YD (*4) T2YDT
Applications	For programmable controller, relay, compact solenoid valve	Dedicated for programmable controller			For programmable controller, relay				For programmable controller, relay		For programmable controller, relay (no lamp), serial		For programmable controller, relay			Dedicated for programmable controller
Output method	-				NPN output	PNP output	NPN output	NPN output	-							
Pwr. supp. V.	-				10 to 28 VDC				-							
Load voltage	85 to 265 VAC	10 to 30 VDC		24 VDC ±10%	30 VDC or less				12/24 VDC	100/110 VAC	5/12/24 VDC	100/110 VAC	12/24 VDC	110 VAC	220 VAC	24 VDC ±10%
Load current	5 to 100 mA	5 to 20 mA (*3)			100 mA or less		50 mA or less		5 to 50 mA	7 to 20 mA	50 mA or less	20 mA or less	5 to 50 mA	7 to 20 mA	7 to 10 mA	5 to 20 mA
Indicator	LED (Lit when ON)	LED (Lit when ON)	Red/green LED (Lit when ON)	Red/green LED (Lit when ON)	LED (Lit when ON)	Yellow LED (Lit when ON)	Red/green LED (Lit when ON)	Red/green LED (Lit when ON)	LED (Lit when ON)		No indicator lamp		LED (Lit when ON)			Red/green LED (Lit when ON)
Leakage current	≤ 1 mA at 100 VAC, ≤ 2 mA at 200 VAC	1 mA or less			10 μA or less				0 mA							1 mA or less
Weight g	1 m:33 3 m:87 5 m:142	1 m:18 3 m:49 5 m:80	1 m:33 3 m:87 5 m:142	1 m:18 3 m:49 5 m:80	1 m:18 3 m:49 5 m:80		1 m:33 3 m:87 5 m:142	1 m:18 3 m:49 5 m:80	1 m:18 3 m:49 5 m:80				1 m:33 3 m:87 5 m:142			1 m:61 3 m:166 5 m:272

*1 : Refer to Ending Page 1 for detailed switch specifications and dimensions.
*2 : Switches other than the above models, such as switches with connectors, are also available. Refer to Ending Page 1.
*3 : The max. load current is 20 mA at 25°C. The current is lower than 20 mA if the operating ambient temperature around the switch is higher than 25˚C. (5 to 10 mA at 60°C)
*4 : Switch for AC magnetic field (T2YD/T2YDT) cannot be used in DC magnetic field.

Cylinder weight table (the weight of the switches is when there are 2 cylinder switches.)

(Unit: g)

Stroke (mm)	5		10		15		20		25		30		40		50	
Bore size (mm)	No switch	Switch	No switch	Switch	No switch	Switch	No switch	Switch	No switch	Switch	No switch	Switch	No switch	Switch	No switch	Switch
ø12	36	86	44	86	53	95	61	103	70	112	72	114	-	-	-	-
ø16	48	104	59	104	69	114	80	125	91	136	102	147	-	-	-	-
ø20	63	118	75	150	88	163	101	176	113	188	126	201	-	-	-	-
ø25	87	178	102	193	118	209	134	225	150	241	165	256	197	288	228	319
ø32	122	236	144	258	166	280	188	302	209	323	231	345	275	389	318	432
ø40	183	326	210	353	236	379	263	406	290	433	316	459	369	512	422	565
ø50	299	493	341	535	383	577	425	619	467	661	510	704	594	788	678	872
ø63	452	731	507	786	-	-	617	896	-	-	727	1006	838	1117	948	1227
ø80	841	1254	928	1341	-	-	1101	1514	-	-	1274	1687	1448	1861	1621	2034
ø100	1319	1886	1433	2000	-	-	1660	2227	-	-	1888	2455	2115	2682	2343	2910

Theoretical thrust table

(Unit: N)

Bore size (mm)	Operating direction	Working pressure MPa											
		0.05	0.1	0.15	0.2	0.3	0.4	0.5	0.6	0.7	0.8	0.9	1.0
ø12	Push	-	11.3	17.0	22.6	33.9	45.2	56.5	67.9	79.2	90.5	$1.02x10^2$	$1.13x10^2$
	Pull	-	8.48	12.7	17.0	25.4	33.9	42.4	50.9	59.4	67.9	76.3	84.8
ø16	Push	-	20.1	30.2	40.2	60.3	80.4	$1.01x10^2$	$1.21x10^2$	$1.41x10^2$	$1.61x10^2$	$1.81x10^2$	$2.01x10^2$
	Pull	-	15.1	22.6	30.2	45.2	60.3	75.4	90.5	$1.06x10^2$	$1.21x10^2$	$1.36x10^2$	$1.51x10^2$
ø20	Push	-	31.4	47.1	62.8	94.2	$1.26x10^2$	$1.57x10^2$	$1.88x10^2$	$2.20x10^2$	$2.51x10^2$	$2.83x10^2$	$3.14x10^2$
	Pull	-	23.6	35.3	47.1	70.7	94.2	$1.18x10^2$	$1.41x10^2$	$1.65x10^2$	$1.88x10^2$	$2.12x10^2$	$2.36x10^2$
ø25	Push	-	49.1	73.6	98.2	$1.47x10^2$	$1.96x10^2$	$2.45x10^2$	$2.95x10^2$	$3.44x10^2$	$3.93x10^2$	$4.42x10^2$	$4.91x10^2$
	Pull	-	37.8	56.7	75.6	$1.13x10^2$	$1.51x10^2$	$1.89x10^2$	$2.27x10^2$	$2.64x10^2$	$3.02x10^2$	$3.40x10^2$	$3.78x10^2$
ø32	Push	-	80.4	$1.21x10^2$	$1.61x10^2$	$2.41x10^2$	$3.22x10^2$	$4.02x10^2$	$4.83x10^2$	$5.63x10^2$	$6.43x10^2$	$7.24x10^2$	$8.04x10^2$
	Pull	-	60.3	90.5	$1.21x10^2$	$1.81x10^2$	$2.41x10^2$	$3.02x10^2$	$3.62x10^2$	$4.22x10^2$	$4.83x10^2$	$5.43x10^2$	$6.03x10^2$
ø40	Push	-	$1.26x10^2$	$1.88x10^2$	$2.51x10^2$	$3.77x10^2$	$5.03x10^2$	$6.28x10^2$	$7.54x10^2$	$8.80x10^2$	$1.01x10^3$	$1.13x10^3$	$1.26x10^3$
	Pull	-	$1.06x10^2$	$1.58x10^2$	$2.11x10^2$	$3.17x10^2$	$4.22x10^2$	$5.28x10^2$	$6.33x10^2$	$7.39x10^2$	$8.44x10^2$	$9.50x10^2$	$1.06x10^3$
ø50	Push	-	$1.96x10^2$	$2.95x10^2$	$3.93x10^2$	$5.89x10^2$	$7.85x10^2$	$9.82x10^2$	$1.18x10^3$	$1.37x10^3$	$1.57x10^3$	$1.77x10^3$	$1.96x10^3$
	Pull	-	$1.65x10^2$	$2.47x10^2$	$3.30x10^2$	$4.95x10^2$	$6.60x10^2$	$8.25x10^2$	$9.90x10^2$	$1.15x10^3$	$1.32x10^3$	$1.48x10^3$	$1.65x10^3$
ø63	Push	$1.56x10^2$	$3.12x10^2$	$4.68x10^2$	$6.23x10^2$	$9.35x10^2$	$1.25x10^3$	$1.56x10^3$	$1.87x10^3$	$2.18x10^3$	$2.49x10^3$	$2.81x10^3$	$3.12x10^3$
	Pull	$1.40x10^2$	$2.80x10^2$	$4.20x10^2$	$5.61x10^2$	$8.41x10^2$	$1.12x10^3$	$1.40x10^3$	$1.68x10^3$	$1.96x10^3$	$2.24x10^3$	$2.52x10^3$	$2.80x10^3$
ø80	Push	$2.51x10^2$	$5.03x10^2$	$7.54x10^2$	$1.01x10^3$	$1.51x10^3$	$2.01x10^3$	$2.51x10^3$	$3.02x10^3$	$3.52x10^3$	$4.02x10^3$	$4.52x10^3$	$5.03x10^3$
	Pull	$2.27x10^2$	$4.54x10^2$	$6.80x10^2$	$9.07x10^2$	$1.36x10^3$	$1.81x10^3$	$2.27x10^3$	$2.72x10^3$	$3.17x10^3$	$3.63x10^3$	$4.08x10^3$	$4.54x10^3$
ø100	Push	$3.93x10^2$	$7.85x10^2$	$1.18x10^3$	$1.57x10^3$	$2.36x10^3$	$3.14x10^3$	$3.93x10^3$	$4.71x10^3$	$5.50x10^3$	$6.28x10^3$	$7.07x10^3$	$7.85x10^3$
	Pull	$3.57x10^2$	$7.15x10^2$	$1.07x10^3$	$1.43x10^3$	$2.14x10^3$	$2.86x10^3$	$3.57x10^3$	$4.29x10^3$	$5.00x10^3$	$5.72x10^3$	$6.43x10^3$	$7.15x10^3$

Dimensions

Same as SSD Series (double acting/single rod). Refer to pages 1103 to 1105.

How to order

No switch (without magnet for switch)

SSD-O — 12 ◯ - 5 ——— N - LB - I

With switch (built-in magnet for switch)

SSD-OL — 12 ◯ - 5 - T0H - R - N - LB - I

2-color LED/off-delay, with T1* switch (ø12/ø16 only)

SSD-OL1 - 12 ◯ - 10 - T2YH - R - N - LB - I

Ⓐ Model No.

Ⓑ Bore size

Ⓒ Port thread

Ⓓ Stroke

Ⓔ Switch model No.
*1
*2
*9

Ⓕ Switch quantity

Ⓖ Option
*3

Ⓗ Mounting bracket
*4
*5

Ⓘ Accessory
*6

Precautions for model No. selection

*1 : Switches other than Ⓔ Switch model No. are also available. (Made to order) Refer to Ending Page 1 for details.
2 : An AC magnetic field proof switch cannot be installed on ø12 and ø16. In addition, T8 switch cannot be installed on ø12 to ø32.
*3 : Piston rod of ø12 to ø25 is stainless steel as standard. C-snap ring is stainless steel instead of steel. The rod end male thread nut is stainless steel.
*4 : The mounting bracket is included at shipment.
*5 : The projection dimension of piston rod WF when LB2 or FA is selected is different from that of the standard. Refer to the dimensions on pages 1109 and 1110. The number of the specified protruding dimension will be added at the end of the model No. printed on the metal plate on the body.
*6 : "I" and "Y" cannot be selected together.
*7 : Refer to Ending Page 85 for custom specifications of rod end form.
*8 : Refer to pages 1086 and 1087 for combinations of variations/options.
*9 : Switches are shipped with the product. Contact CKD if assembling before shipment is necessary.

[Example of model No.]

SSD-OL-12-5-T0H-R-N

Model: Compact cylinder
Double acting/low speed

Ⓑ Bore size : ø12 mm
Ⓒ Port thread : Rc thread
Ⓓ Stroke : 5 mm
Ⓔ Switch model No. : Reed T0H switch
Ⓕ Switch quantity : 1 on rod side
Ⓖ Option : Rod end male thread

How to order switch

SW - T0H

Switch model No.
(Item Ⓔ above)

Code	Description
Ⓐ Model No.	
SSD-O	Double acting/low speed
SSD-OL	Double acting/low speed/with switch
SSD-OL1	ø12, ø16 2-color LED, off-delay, with T1* switch

Ⓑ Bore size (mm)	
12	ø12
16	ø16
20	ø20
25	ø25
32	ø32
40	ø40
50	ø50
63	ø63
80	ø80
100	ø100

Ⓒ Port thread	
Blank	Rc thread
NN	NPT thread (ø32 and over) (made-to-order product)
GN	G thread (ø32 and over) (made-to-order product)

Ⓓ Stroke (mm)

Refer to the stroke table on the following page.

Ⓔ Switch model No.

Axial lead wire	Radial lead wire	Contact	Voltage AC	Voltage DC	Indicator	Lead wire
T0H*	T0V*	Reed	●	●	1-color LED	2-wire
T5H*	T5V*	Reed	●	●	No indicator lamp	2-wire
T8H*	T8V*	Reed	●	●	1-color LED	2-wire
T1H*	T1V*	Proximity	●		1-color LED	2-wire
T2H*	T2V*	Proximity		●	1-color LED	2-wire
T3H*	T3V*	Proximity		●	1-color LED	3-wire
T3PH*	T3PV*	Proximity		●	1-color LED	3-wire
T2WH*	T2WV*	Proximity		●	2-color LED	2-wire
T2YH*	T2YV*	Proximity		●	2-color LED	2-wire
T3WH*	T3WV*	Proximity		●	2-color LED	3-wire
T3YH*	T3YV*	Proximity		●	2-color LED	3-wire
T2JH*	T2JV*	Proximity		●	1-color LED off-delay	2-wire
T2YD*	-	Proximity		●	2-color LED AC magnetic field	2-wire
T2YDT*	-	Proximity		●	2-color LED AC magnetic field	2-wire
T2HR3	T2VR3	Proximity		●	1-color LED (bend resist lead wire specs)	2-wire

*** Lead wire length**	
Blank	1 m (standard)
3	3 m (option)
5	5 m (option)

Ⓕ Switch quantity	
R	1 on rod side
H	1 on head side
D	2

Ⓖ Option	
Blank	Rod end female thread
N	Rod end male thread
M	Piston rod material (stainless steel)

Ⓗ Mounting bracket	
LB	Axial foot
LB2	Axial foot (compact)
CB	Clevis bracket (pin and snap ring included)
CB2	Clevis bracket (compact) (pin and snap ring included)
FA	Rod side flange
FB	Head side flange

Ⓘ Accessory (available when rod end male thread "N" is selected)	
I	Rod eye
I2	Rod eye (compact)
Y	Rod clevis (pin and snap ring included)
Y2	Rod clevis (compact) (pin and snap ring included)

[Stroke table]

Stroke (mm)		Applicable bore size									
		ø12	ø16	ø20	ø25	ø32	ø40	ø50	ø63	ø80	ø100
Standard stroke	5	●	●	●	●	●	●	●	●	●	●
	10	●	●	●	●	●	●	●	●	●	●
	15	●	●	●	●	●	●	●			
	20	●	●	●	●	●	●	●	●	●	●
	25	●	●	●	●	●	●	●			
	30	●	●	●	●	●	●	●	●	●	●
	40				●	●	●	●	●	●	●
	50				●	●	●	●	●	●	●
Min. stroke (mm) *1		1									
Max. stroke (mm)		30			50						
Custom stroke *2		In 1 mm increments									

1 : Less than 5 mm with 1-color LED switch and less than 10 mm with the 2-color LED, off-delay, AC magnetic field proof, T1 or T8* switch are not available.
Refer to page 1178 for the number of installed switches and the min. stroke.
*2 : The total length is the same as that of the next longer standard stroke.
*3 : Refer to pages 1320 and 1321 for the min. stroke with mounting brackets LB and LB2.

How to order mounting bracket

Bore size (mm) / Mounting bracket	ø12	ø16	ø20	ø25	ø32	ø40	ø50	ø63	ø80	ø100
Foot (LB)	SSD-LB-12	SSD-LB-16	SSD-LB-20	SSD-LB-25	SSD-LB-32	SSD-LB-40	SSD-LB-50	SSD-LB-63	SSD-LB-80	SSD-LB-100
Foot (LB2)	SSD-LB2-12	SSD-LB2-16	SSD-LB2-20	SSD-LB2-25	SSD-LB2-32	SSD-LB2-40	SSD-LB2-50	SSD-LB2-63	SSD-LB2-80	SSD-LB2-100
Flange (FA/FB)	SSD-FA-12	SSD-FA-16	SSD-FA-20	SSD-FA-25	SSD-FA-32	SSD-FA-40	SSD-FA-50	SSD-FA-63	SSD-FA-80	SSD-FA-100
Clevis bracket (CB)	SSD-CB-12	SSD-CB-16	SSD-CB-20	SSD-CB-25	SSD-CB-32	SSD-CB-40	SSD-CB-50	SSD-CB-63	SSD-CB-80	SSD-CB-100
Clevis bracket (CB2)	SSD-CB2-12	SSD-CB2-16	SSD-CB2-20	SSD-CB2-25	SSD-CB2-32	SSD-CB2-40	SSD-CB2-50	SSD-CB2-63	SSD-CB2-80	SSD-CB2-100

*1: The foot mounting bracket is provided as 2 pcs./set.

SCP*3
CMK2
CMA2
SCM
SCG
SCA2
SCS2
CKV2
CAV2/COVP/N2
SSD2
SSG
SSD
CAT
MDC2
MVC
SMG
MSD/MSDG
FC*
STK
SRL3
SRG3
SRM3
SRT3
MRL2
MRG2
SM-25
ShkAbs
FJ
FK
Spd Contr
Ending

Internal structure and parts list

● SSD-OL-12 to 25 (double acting/low speed/with switch)

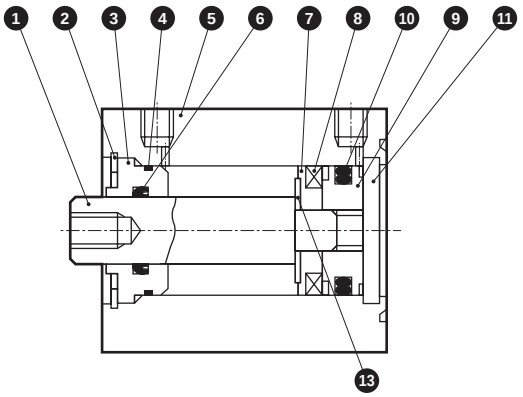

● SSD-O-12 to 25 (double acting/low speed)

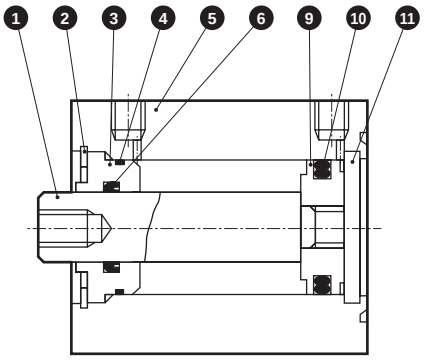

● SSD-OL-32 to 50 (double acting/low speed/with switch)

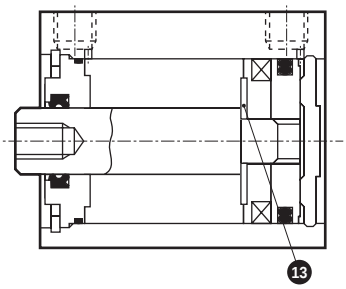

● SSD-O-32 to 50 (double acting/low speed)

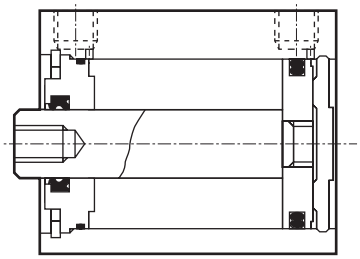

● SSD-OL-63 to 100 (double acting/low speed/with switch)

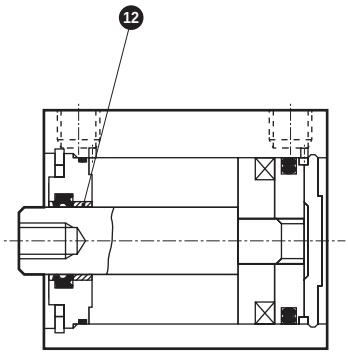

● SSD-O-63 to 100 (double acting/low speed)

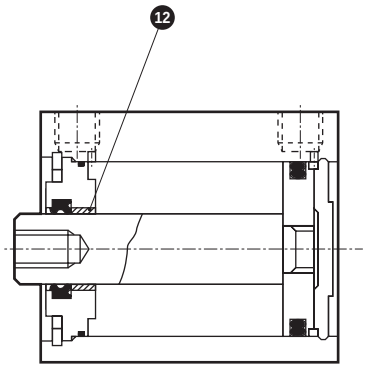

No.	Part name	Material	Remarks
1	Piston rod	ø12 to ø25: Stainless steel ø32 to ø100: Steel	ø16 to ø100: Industrial chrome plating
2	C-snap ring	Steel	Zinc phosphate
3	Rod metal	ø12 to ø50: Special aluminum ø63 to ø100: Aluminum alloy	Alumite
4	Rod metal gasket	Nitrile rubber	
5	Body	Aluminum alloy	Hard alumite
6	Rod packing	Nitrile rubber	

No.	Part name	Material	Remarks
7	Spacer	ø12, ø63 to ø100: Aluminum alloy ø16 to ø50: Special resin	ø12, ø63 to ø100: Chromate
8	Magnet	Plastic	
9	Piston	Aluminum alloy	Chromate
10	Piston packing	Nitrile rubber	
11	Cover	ø12 to ø25: Stainless steel ø32 to ø100: Aluminum alloy	ø32 to ø100: Alumite
12	Bush	Oiles drymet	ø63 to ø100
13	Spacer washer	Stainless steel	ø20 to ø50

Fluorine grease is used.

Repair parts list

Bore size (mm)	Kit No.	Repair parts No.
ø12	SSD-O-12K	❹ ❻ ❿
ø16	SSD-O-16K	
ø20	SSD-O-20K	
ø25	SSD-O-25K	
ø32	SSD-O-32K	

Bore size (mm)	Kit No.	Repair parts No.
ø40	SSD-O-40K	❹ ❻ ❿
ø50	SSD-O-50K	
ø63	SSD-O-63K	
ø80	SSD-O-80K	
ø100	SSD-O-100K	

MEMO

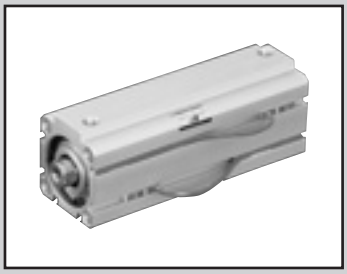

Compact cylinder/double acting/high load/low friction

SSD-KU Series

● Bore size: ø20/ø25/ø32/ø40/ø50/ø63/ø80/ø100

JIS symbol 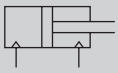

RoHS CAD

Specifications

Item		SSD-KU SSD-KUL (with switch)							
Bore size		ø20	ø25	ø32	ø40	ø50	ø63	ø80	ø100
Actuation		Double acting							
Working fluid		Compressed air							
Max. working pressure	MPa	0.7 (≈100 psi, 7 bar)							
Min. working pressure	MPa	0.03 (≈4.4 psi, 0.3 bar)							
Proof pressure	MPa	1.0 (≈150 psi, 10 bar)							
Ambient temperature	°C	5 (41°F) to 60 (140°F)							
Port size		M5		Rc1/8		Rc1/4		Rc3/8	
Stroke tolerance	mm	+2.0 0							
Working piston speed	m/s	10 to 500					10 to 300		
Cushion		Rubber cushion							
Lubrication		Not available							
Allowable absorbed energy	J	0.16	0.16	0.40	0.62	0.98	1.56	2.51	3.92
Internal leakage	L/min	5						8	

Stroke

Bore size (mm)	Standard stroke (mm)	Max. stroke (mm)	Min. stroke (mm)
ø20	5, 10, 15, 20, 25, 30, 40, 50	200 *1)	5
ø25	10, 15, 20, 25, 30, 40 50, 60, 70, 80, 90, 100	300 *1)	
ø32			
ø40			
ø50			
ø63	10, 20, 30, 40, 50 60, 70, 80, 90, 100		
ø80			
ø100			

*1) The custom stroke is available in 1 mm increments. However, the total length is the same as that of the next longer standard stroke.
*2) Stroke over standard to maximum is available in increments of 10.
(Example) ø20: 60, 70, 80, 90, 100
*3) Dimensions of custom stroke (example: 64 mm stroke) are the same as the next stroke up (example: 70 mm stroke).
*4) From 101 to 200 for ø20, 151 to 300 for ø25 to ø50, or 201 to 300 for ø63 to ø100, internal structure and total length are different in some products.
*5) When using the type with a switch, refer to the table below.
*6) Refer to pages 1320 and 1321 for the min. stroke with mounting brackets LB and LB2.

Number of installed switches and min. stroke (mm)

Switch quantity	1	2	3	4	5
Switch model No. / Bore size (mm)	T*	T*	T*	T*	T*
ø20	5	5	35	50	65
ø25	5	5	35	50	65
ø32	5	5	35	50	65
ø40	5	5	35	50	65
ø50	5	5	35	50	65
ø63	5	5	35	50	65
ø80	5	5	35	50	65
ø100	5	5	35	50	65

Note: Less than 10 mm with the 2-color LED, off-delay, AC magnetic field proof, T1* or T8* switch is not available.

Switch specifications

● 1-color/2-color LED/for AC magnetic field

Item	2-wire proximity				3-wire proximity				2-wire reed							2-wire proximity
	T1H/ T1V	T2H/T2V/ T2JH/T2JV	T2YH/ T2YV	T2WH/ T2WV	T3H/ T3V	T3PH/ T3PV	T3YH/ T3YV	T3WH/ T3WV	T0H/T0V		T5H/T5V		T8H/T8V			T2YD (*4) T2YDT
Applications	Programmable controller, For relay, compact solenoid valve	Dedicated for programmable controller			Programmable For controller, relay				Programmable For controller, relay		Programmable controller, relay/IC circuit (no indicator lamp), for serial connection		For programmable controller, relay			Programmable Controller dedicated
Output method	-				NPN output	PNP output	NPN output	NPN output	-							
Pwr. supp. V.	-				10 to 28 VDC				-							
Load voltage	85 to 265 VAC	10 to 30 VDC		24 VDC ±10%	30 VDC or less				12/24 VDC	100/110 VAC	5/12/24 VDC	100/110 VAC	12/24 VDC	110 VAC	220 VAC	24 VDC ±10%
Load current	5 to 100 mA	5 to 20 mA (*3)			100 mA or less		50 mA or less		5 to 50 mA	7 to 20 mA	50 mA or less	20 mA or less	5 to 50 mA	7 to 20 mA	7 to 10 mA	5 to 20 mA
Indicator	LED (Lit when ON)	LED (Lit when ON)	Red/ greenLED (Lit when ON)	Red/ greenLED (Lit when ON)	LED (Lit when ON)	Yellow LED (Lit when ON)	Red/ greenLED (Lit when ON)	Red/ greenLED (Lit when ON)	LED (Lit when ON)		No indicator lamp		LED (Lit when ON)			Red/ greenLED (Lit when ON)
Leakage current	1 mA or less with 100 VAC, 2 mA or less with 200 VAC	1 mA or less			10 μA or less				0mA							1 mA or less
Weight g	1 m: 33 3 m: 87 5 m: 142	1 m: 18 3 m: 49 5 m: 80	1 m: 33 3 m: 87 5 m: 142	1 m: 18 3 m: 49 5 m: 80	1 m: 18 3 m: 49 5 m: 80		1 m: 33 3 m: 87 5 m: 142	1 m: 18 3 m: 49 5 m: 80	1 m: 18 3 m: 49 5 m: 80				1 m: 33 3 m: 87 5 m: 142			1 m: 61 3 m: 166 5 m: 272

***1: Refer to Ending Page 1 for detailed switch specifications and dimensions.**
***2: Switches other than the above models, such as switches with connectors, are also available. Refer to Ending Page 1.**
*3: The max. load current is 20mA at 25°C. The current is lower than 20 mA if the operating ambient temperature around the switch is higher than 25˚C. (5 to 10 mA at 60°C)
*4: Switch for AC magnetic field (T2YD/T2YDT) cannot be used in DC magnetic field.

Theoretical thrust table

(Unit: N)

Bore size (mm)	Operating direction	Working pressure MPa 0.03	0.1	0.15	0.2	0.3	0.4	0.5	0.6	0.7
ø20	Push	9.42	31.4	47.1	62.8	94.2	1.26×10^2	1.57×10^2	1.88×10^2	2.20×10^2
	Pull	7.07	23.6	35.3	47.1	70.7	94.2	1.18×10^2	1.41×10^2	1.65×10^2
ø25	Push	14.7	49.1	73.6	98.2	1.47×10^2	1.96×10^2	2.45×10^2	2.95×10^2	3.44×10^2
	Pull	11.3	37.8	56.7	75.6	1.13×10^2	1.51×10^2	1.89×10^2	2.27×10^2	2.64×10^2
ø32	Push	24.1	80.4	1.21×10^2	1.61×10^2	2.41×10^2	3.22×10^2	4.02×10^2	4.83×10^2	5.63×10^2
	Pull	18.1	60.3	90.5	1.21×10^2	1.81×10^2	2.41×10^2	3.02×10^2	3.62×10^2	4.22×10^2
ø40	Push	37.7	1.26×10^2	1.88×10^2	2.51×10^2	3.77×10^2	5.03×10^2	6.28×10^2	7.54×10^2	8.80×10^2
	Pull	31.7	1.06×10^2	1.58×10^2	2.11×10^2	3.17×10^2	4.22×10^2	5.28×10^2	6.33×10^2	7.39×10^2
ø50	Push	58.9	1.96×10^2	2.95×10^2	3.93×10^2	5.89×10^2	7.85×10^2	9.82×10^2	1.18×10^3	1.37×10^3
	Pull	49.5	1.65×10^2	2.47×10^2	3.30×10^2	4.95×10^2	6.60×10^2	8.25×10^2	9.90×10^2	1.15×10^3
ø63	Push	93.5	3.12×10^2	4.68×10^2	6.23×10^2	9.35×10^2	1.25×10^3	1.56×10^3	1.87×10^3	2.18×10^3
	Pull	84.0	2.80×10^2	4.20×10^2	5.61×10^2	8.41×10^2	1.12×10^3	1.40×10^3	1.68×10^3	1.96×10^3
ø80	Push	1.51×10^2	5.03×10^2	7.54×10^2	1.01×10^3	1.51×10^3	2.01×10^3	2.51×10^3	3.02×10^3	3.52×10^3
	Pull	1.36×10^2	4.54×10^2	6.80×10^2	9.07×10^2	1.36×10^3	1.81×10^3	2.27×10^3	2.72×10^3	3.17×10^3
ø100	Push	2.36×10^2	7.85×10^2	1.18×10^3	1.57×10^3	2.36×10^3	3.14×10^3	3.93×10^3	4.71×10^3	5.50×10^3
	Pull	2.14×10^2	7.15×10^2	1.07×10^3	1.43×10^3	2.14×10^3	2.86×10^3	3.57×10^3	4.29×10^3	5.00×10^3

Dimensions

Same as SSD-K Series (double acting/high load).Pages 1122 to 1125.

Technical data

For technical data regarding sliding resistance values,Page 306.Page 306SSD-KU Series shows a similar trend to the data of "SCM-U Series".

How to order

No switch (without magnet for switch)

SSD-KU - 20 ( ) - 5 ——— N - LB - I

With switch (built-in magnet for switch)

SSD-KUL - 20 ( ) - 5 - T0H - R - N - LB - I

Ⓐ Bore size

Ⓑ Port thread

Ⓒ Stroke

Ⓓ Switch model No. *7

Ⓔ Switch quantity

Ⓕ Option *2

Ⓖ Mounting bracket *3 *4

Ⓗ Accessory *5

Precautions for model No. selection

*1 : Switches other than Ⓓ Switch model No. are also available. (Made to order)
Refer to Ending Page 1 for details.

*2 : Piston rod of ø20 and ø25 is stainless steel as standard. C-snap ring is stainless steel instead of steel. The rod end male thread nut is stainless steel.

*3 : The mounting bracket is included at shipment.

*4 : The projection dimension of piston rod WF when LB2 or FA is selected is different from that of the standard. Refer to the dimensions on pages 1109 and 1110. The number of the specified protruding dimension will be added at the end of the model No. printed on the metal plate on the body.

*5 : "I" and "Y" cannot be selected together.

*6 : Refer to Ending Page 85 for custom specifications of rod end form.

*7 : Switches are shipped with the product. Contact CKD if assembling before shipment is necessary.

[Example of model No.]

SSD-KUL-20-5-T0H-R-N

Model: Compact cylinder
High load/low friction

Ⓐ Bore size : ø20
Ⓑ Port thread : Rc thread
Ⓒ Stroke : 5 mm
Ⓓ Switch model No. : Reed switch T0H, lead wire 1 m
Ⓔ Switch quantity : 1 on rod side
Ⓕ Option : Rod end male thread

Code	Description
Ⓐ Bore size (mm)	
20	ø20
25	ø25
32	ø32
40	ø40
50	ø50
63	ø63
80	ø80
100	ø100
Ⓑ Port thread	
Blank	Rc thread
NN	NPT thread (ø32 and over) (made-to-order product)
GN	G thread (ø32 and over) (made-to-order product)
Ⓒ Stroke (mm)	
Refer to the stroke table on the following page.	

Ⓓ Switch model No.

Axial lead wire	Radial lead wire	Contact	Voltage AC	Voltage DC	Indicator	Lead wire
TOH*	**T0V***	Reed	●	●	1-color LED	2-wire
T5H*	**T5V***	Reed	●	●	No indicator lamp	2-wire
T8H*	**T8V***	Reed	●	●	1-color LED	2-wire
T1H*	**T1V***	Proximity	●		1-color LED	2-wire
T2H*	**T2V***	Proximity		●	1-color LED	2-wire
T3H*	**T3V***	Proximity		●	1-color LED	3-wire
T3PH*	**T3PV***	Proximity		●	1-color LED	3-wire
T2WH*	**T2WV***	Proximity		●	2-color LED	2-wire
T2YH*	**T2YV***	Proximity		●	2-color LED	2-wire
T3WH*	**T3WV***	Proximity		●	2-color LED	3-wire
T3YH*	**T3YV***	Proximity		●	2-color LED	3-wire
T2JH*	**T2JV***	Proximity		●	1-color LED off-delay	2-wire
T2YD*	**-**	Proximity		●	2-color LED AC magnetic field	2-wire
T2YDT*	**-**	Proximity		●	2-color LED AC magnetic field	2-wire
T2HR3	**T2VR3**	Proximity		●	1-color LED (bend resist lead wire specs)	2-wire

*** Lead wire length**	
Blank	1 m (standard)
3	3 m (option)
5	5 m (option)
Ⓔ Switch quantity	
R	1 on rod side
H	1 on head side
D	2
Ⓕ Option	
Blank	Rod end female thread
N	Rod end male thread
M	Piston rod material (stainless steel)
Ⓖ Mounting bracket	
LB	Axial foot
LB2	Axial foot (compact)
CB	Clevis bracket (pin and snap ring included)
CB2	Clevis bracket (compact) (pin and snap ring included)
FA	Rod side flange
FB	Head side flange
Ⓗ Accessory (available when rod end male thread "N" is selected)	
I	Rod eye
I2	Rod eye (compact)
Y	Rod clevis (pin and snap ring included)
Y2	Rod clevis (compact) (pin and snap ring included)

How to order switch

SW - T0H*

Switch model No. (Item Ⓓ above)

[Stroke table]

Stroke (mm)		Applicable bore size							
		ø20	ø25	ø32	ø40	ø50	ø63	ø80	ø100
Standard stroke	5	●							
	10	●	●	●	●	●	●	●	●
	15	●	●	●	●	●			
	20	●	●	●	●	●	●	●	●
	25	●	●	●	●	●			
	30	●	●	●	●	●	●	●	●
	40	●	●	●	●	●	●	●	●
	50	●	●	●	●	●	●	●	●
	60		●	●	●	●	●	●	●
	70		●	●	●	●	●	●	●
	80		●	●	●	●	●	●	●
	90		●	●	●	●	●	●	●
	100		●	●	●	●	●	●	●
Min. stroke (mm) *1		5							
Max. stroke (mm)		200	300						
Custom stroke *2		In 1 mm increments							

1 : Less than 10 mm with the 2-color LED, off-delay, AC magnetic field proof, T1 or T8* switch is not available.
Refer to page 1184 for the number of installed switches and the min. stroke.
*2 : The total length is the same as that of the next longer standard stroke.
*3 : Refer to pages 1320 and 1321 for the min. stroke with mounting brackets LB and LB2.

How to order mounting bracket

Bore size (mm) / Mounting bracket	ø20	ø25	ø32	ø40	ø50	ø63	ø80	ø100
Foot (LB)	SSD-LB-20	SSD-LB-25	SSD-LB-32	SSD-LB-40	SSD-LB-50	SSD-LB-63	SSD-LB-80	SSD-LB-100
Foot (LB2)	SSD-LB2-20	SSD-LB2-25	SSD-LB2-32	SSD-LB2-40	SSD-LB2-50	SSD-LB2-63	SSD-LB2-80	SSD-LB2-100
Flange (FA/FB)	SSD-FA-20	SSD-FA-25	SSD-FA-32	SSD-FA-40	SSD-FA-50	SSD-FA-63	SSD-FA-80	SSD-FA-100
Clevis bracket (CB)	SSD-CB-20	SSD-CB-25	SSD-CB-32	SSD-CB-40	SSD-CB-50	SSD-CB-63	SSD-CB-80	SSD-CB-100
Clevis bracket (CB2)	SSD-CB2-20	SSD-CB2-25	SSD-CB2-32	SSD-CB2-40	SSD-CB2-50	SSD-CB2-63	SSD-CB2-80	SSD-CB2-100

*1: The foot mounting bracket is provided as 2 pcs./set.

Cylinder weight table (the weight of the switches is when there are 2 cylinder switches.)

(Unit: g)

Stroke (mm)	5		10		15		20		25		30		40		50		60		70		80		90		100	
Bore size (mm)	No switch	Switch	No switch	Switch	No switch	Switch	No switch	Switch	No switch	Switch	No switch	Switch	No switch	Switch	No switch	Switch	No switch	Switch	No switch	Switch	No switch	Switch	No switch	Switch	No switch	Switch
ø20	75	150	88	163	101	176	113	188	126	201	138	213	163	238	188	263	213	288	238	313	263	338	288	363	313	388
ø25	—	—	118	209	134	225	150	241	165	256	182	273	214	305	246	337	278	369	310	401	342	433	374	465	406	497
ø32	—	—	188	302	209	323	231	345	253	367	275	389	318	432	361	475	404	518	447	561	490	604	533	647	576	690
ø40	—	—	263	406	290	433	316	459	342	485	369	512	422	565	475	618	528	671	581	724	634	777	687	830	740	883
ø50	—	—	425	619	467	661	510	704	553	747	594	788	678	872	762	956	846	1040	930	1124	1014	1208	1098	1292	1182	1376
ø63	—	—	617	896	—	—	727	1006	—	—	838	1117	948	1227	1058	1337	1168	1447	1278	1557	1388	1667	1498	1777	1608	1887
ø80	—	—	1101	1514	—	—	1274	1687	—	—	1448	1861	1621	2034	1794	2207	1967	2380	2140	2553	2313	2726	2486	2899	2659	3072
ø100	—	—	1660	2227	—	—	1888	2455	—	—	2115	2682	2343	2910	2571	3138	2799	3366	3027	3594	3255	3822	3483	4050	3711	4278

Stroke (mm)	110		120		130		140		150		160		170		180		190		200	
Bore size (mm)	No switch	Switch	No switch	Switch	No switch	Switch	No switch	Switch	No switch	Switch	No switch	Switch	No switch	Switch	No switch	Switch	No switch	Switch	No switch	Switch
ø20	338	413	363	438	388	463	413	488	438	513	463	538	488	563	513	588	538	613	563	638
ø25	438	529	470	561	502	593	534	625	566	657	598	689	630	721	662	753	694	785	726	817
ø32	619	733	662	776	705	819	748	862	791	905	833	947	876	990	919	1033	962	1076	1005	1119
ø40	793	936	846	989	899	1042	952	1095	1005	1148	1058	1201	1111	1254	1164	1307	1217	1360	1270	1413
ø50	1266	1460	1350	1544	1434	1628	1518	1712	1602	1796	1700	1894	1785	1979	1870	2064	1955	2149	2040	2234
ø63	1718	1997	1828	2107	1938	2217	2048	2327	2158	2437	2268	2547	2378	2657	2488	2767	2598	2877	2708	2987
ø80	2832	3245	3005	3418	3178	3591	3351	3764	3524	3937	3697	4110	3870	4283	4043	4456	4216	4629	4389	4802
ø100	3939	4506	4167	4734	4395	4962	4623	5190	4851	5418	5079	5646	5307	5874	5535	6102	5763	6830	5991	6558

Stroke (mm)	210		220		230		240		250		260		270		280		290		300	
Bore size (mm)	No switch	Switch	No switch	Switch	No switch	Switch	No switch	Switch	No switch	Switch	No switch	Switch	No switch	Switch	No switch	Switch	No switch	Switch	No switch	Switch
ø25	769	849	801	881	833	913	865	945	897	977	929	1009	961	1041	993	1073	1025	1105	1057	1137
ø32	1048	1162	1091	1205	1134	1248	1177	1291	1220	1334	1263	1377	1306	1420	1349	1463	1392	1506	1435	1549
ø40	1323	1466	1376	1519	1429	1572	1482	1625	1535	1678	1588	1731	1641	1784	1694	1837	1747	1890	1800	1943
ø50	2125	2319	2210	2404	2295	2489	2380	2574	2465	2659	2550	2744	2635	2829	2720	2914	2805	2999	2890	3084
ø63	2817	3096	2927	3206	3037	3316	3147	3426	3257	3536	3367	3646	3477	3756	3587	3866	3697	3976	3807	4086
ø80	4561	4974	4734	5147	4907	5320	5080	5493	5253	5666	5426	5839	5599	6012	5772	6185	5945	6358	6118	6531
ø100	6220	6787	6448	7015	6676	7243	6904	7471	7132	7699	7360	7927	7588	8155	7816	8383	8044	8611	8272	8839

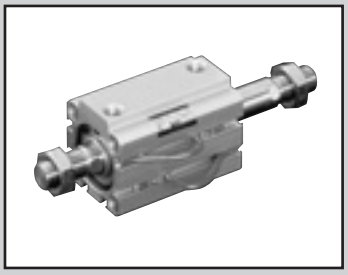

Compact cylinder double acting/double rod

SSD-D Series

● Bore size: ø12/ø16/ø20/ø25/ø32/ø40/ø50/ø63/ø80/ø100/ø120/ø140/ø160

JIS symbol

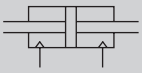

RoHS CAD

Specifications

Item	SSD-D SSD-DL (with switch)												
Bore size mm	ø12	ø16	ø20	ø25	ø32	ø40	ø50	ø63	ø80	ø100	ø125	ø140	ø160
Actuation	Double acting												
Working fluid	Compressed air												
Max. working pressure MPa	1.0 (≈150 psi, 10 bar)												
Min. working pressure MPa	0.15 (≈22 psi, 1.5 bar)							0.1 (≈15 psi, 1 bar)			0.05 (≈7.3 psi, 0.5 bar)		
Proof pressure MPa	1.6 (≈230 psi, 16 bar)												
Ambient temperature °C	-10 (14°F) to 60 (140°F) (no freezing)												
Port size	M5				Rc1/8		Rc1/4		Rc3/8				
Stroke tolerance mm	+1.0 0										+2.0 0		
Working piston speed mm/s	50 to 500							50 to 300					
Cushion	None										Rubber cushion		
Lubrication	Not required (use turbine oil ISO VG32 if necessary for lubrication)												
Allowable absorbed energy J	0.004	0.01	0.016	0.021	0.025	0.092	0.1	0.12	0.27	0.56	6.52	6.52	7.78

Stroke

Bore size (mm)	Standard stroke (mm)	Max. stroke (mm)	Min. stroke (mm)
ø12	5, 10, 15, 20, 25, 30	30	1
ø16			
ø20			
ø25	5, 10, 15, 20 25, 30, 40, 50	50	
ø32			
ø40			
ø50			
ø63	5, 10, 20, 30, 40, 50	50	
ø80			
ø100			
ø125	10, 20, 30, 40, 50 60, 70, 80, 90, 100	300	10
ø140			
ø160			

*1: Total length when using a custom stroke is different between ø12 to ø100 and ø125 to ø160. Please be careful.
[ø12 to ø100]
The dimensions of the total length with the custom stroke are the handled same as the next longer standard stroke.
[ø125 to ø160]
Total length dimension with custom stroke is handled as the custom stroke dedicated length.
*2: When using the type with switch, refer to the table below.
*3: Refer to pages 1320 and 1321 for the min. stroke with mounting brackets LB and LB2.

Number of installed switches and min. stroke (mm)

Switch quantity	1	2	3	4	5
Switch model No. / Bore size (mm)	T*	T*	T*	T*	T*
ø12	5	5	25	-	-
ø16	5	5	25	-	-
ø20	5	5	-	-	-
ø25	5	5	35	50	-
ø32	5	5	35	50	-
ø40	5	5	35	50	-
ø50	5	5	35	50	-
ø63	5	5	35	55	-
ø80	5	5	35	55	-
ø100	5	5	35	55	-
ø125	10	10	40	55	70
ø140	10	10	40	55	70
ø160	10	10	40	55	70

Note: Less than 10 mm with the 2-color LED, off-delay, AC magnetic field proof, T1* or T8* switch is not available.

Switch specifications

● 1-color/2-color LED/for AC magnetic field proof

Item	2-wire proximity				3-wire proximity				2-wire reed							2-wire proximity
	T1H/ T1V	T2H/T2V/ T2JH/T2JV	T2YH/ T2YV	T2WH/ T2WV	T3H/ T3V	T3PH/ T3PV	T3YH/ T3YV	T3WH/ T3WV	T0H/T0V		T5H/T5V		T8H/T8V			T2YD (*4) T2YDT
Applications	For programmable controller, relay, compact solenoid valve	Dedicated for programmable controller			For programmable controller, relay				For programmable controller, relay		For programmable controller, relay (no lamp), serial		For programmable controller, relay			Dedicated for programmable controller
Output method	-				NPN output	PNP output	NPN output	NPN output	-							
Pwr. supp. V.	-				10 to 28 VDC				-							
Load voltage	85 to 265 VAC	10 to 30 VDC		24 VDC ±10%	30 VDC or less				12/24 VDC	100/110 VAC	5/12/24 VDC	100/110 VAC	12/24 VDC	110 VAC	220 VAC	24 VDC ±10%
Load current	5 to 100 mA	5 to 20 mA (*3)			100 mA or less		50 mA or less		5 to 50 mA	7 to 20 mA	50 mA or less	20 mA or less	5 to 50 mA	7 to 20 mA	7 to 10 mA	5 to 20 mA
Indicator	LED (Lit when ON)	LED (Lit when ON)	Red/green LED (Lit when ON)	Red/green LED (Lit when ON)	LED (Lit when ON)	Yellow LED (Lit when ON)	Red/green LED (Lit when ON)	Red/green LED (Lit when ON)	LED (Lit when ON)		No indicator lamp		LED (Lit when ON)			Red/green LED (Lit when ON)
Leakage current	≤ 1 mA at 100 VAC, ≤ 2 mA at 200 VAC	1 mA or less			10 μA or less				0 mA							1 mA or less
Weight g	1 m:33 3 m:87 5 m:142	1 m:18 3 m:49 5 m:80	1 m:33 3 m:87 5 m:142	1 m:18 3 m:49 5 m:80	1 m:18 3 m:49 5 m:80		1 m:33 3 m:87 5 m:142	1 m:18 3 m:49 5 m:80	1 m:18 3 m:49 5 m:80				1 m:33 3 m:87 5 m:142			1 m:61 3 m:166 5 m:272

*1 : Refer to Ending Page 1 for detailed switch specifications and dimensions.
*2 : Switches other than the above models, such as switches with connectors, are also available. Refer to Ending Page 1.
*3 : The max. load current is 20 mA at 25°C. The current is lower than 20 mA if the operating ambient temperature around the switch is higher than 25˚C. (5 to 10 mA at 60°C)
*4 : Switch for AC magnetic field (T2YD/T2YDT) cannot be used in DC magnetic field.

Cylinder weight table (the weight of the switches is when there are 2 cylinder switches.)

● ø12 to ø100

(Unit: g)

Stroke (mm) / Bore size (mm)	5		10		15		20		25		30		40		50	
	No switch	Switch	No switch	Switch	No switch	Switch	No switch	Switch	No switch	Switch	No switch	Switch	No switch	Switch	No switch	Switch
ø12	52	105	60	105	69	115	77	124	86	134	95	147	-	-	-	-
ø16	74	133	85	133	95	144	106	156	117	168	128	177	-	-	-	-
ø20	131	187	143	222	161	238	179	254	196	269	214	285	-	-	-	-
ø25	147	238	162	253	178	269	194	285	210	301	226	316	257	348	288	379
ø32	184	299	230	344	275	390	322	436	366	481	413	527	507	617	601	707
ø40	283	426	310	453	336	479	363	506	390	533	416	569	469	612	522	665
ø50	458	652	508	702	558	751	608	803	658	851	708	901	808	1001	911	1105
ø63	827	953	902	1266	-	-	1052	1416	-	-	1202	1566	1353	1717	1503	1867
ø80	1491	1421	1608	1538	-	-	1841	2294	-	-	2074	2527	2308	2771	2541	3004
ø100	2314	2941	2483	3105	-	-	2820	3402	-	-	3158	3770	3495	4097	3833	4425

Cylinder weight table (the weight of the switches is when there are 2 cylinder switches.)

● ø125 to ø160

(Unit: kg)

Stroke (mm) / Bore size (mm)	10		20		30		40		50		60		70		80		90		100	
	No switch	With switch	No switch	With switch	No switch	With switch	No switch	With switch	No switch	With switch	No switch	With switch	No switch	With switch	No switch	With switch	No switch	With switch	No switch	With switch
ø125	4.64	4.74	4.98	5.08	5.32	5.42	5.66	5.76	6	6.1	6.64	6.44	6.68	6.78	7.02	7.12	7.36	7.46	7.7	7.8
ø140	6.62	6.73	7	7.11	7.93	7.5	7.77	7.88	8.15	8.26	8.54	8.65	8.92	9.03	9.3	9.41	9.68	9.79	10.07	10.18
ø160	9.1	9.22	9.58	9.7	10.06	10.18	10.54	10.66	11.02	11.14	11.5	11.62	11.97	12.09	12.45	12.57	12.93	13.05	13.41	13.53

Theoretical thrust table

(Unit: N)

Bore size (mm)	Operating direction	Working pressure MPa											
		0.05	0.1	0.15	0.2	0.3	0.4	0.5	0.6	0.7	0.8	0.9	1.0
ø12	Pull	-	-	12.7	17.0	25.4	33.9	42.4	50.9	59.4	67.9	76.3	84.8
ø16	Pull	-	-	22.6	30.2	45.2	60.3	75.4	90.5	$1.06x10^2$	$1.21x10^2$	$1.36x10^2$	$1.51x10^2$
ø20	Pull	-	-	35.3	47.1	70.7	94.2	$1.18x10^2$	$1.41x10^2$	$1.65x10^2$	$1.88x10^2$	$2.12x10^2$	$2.36x10^2$
ø25	Pull	-	-	56.7	75.6	$1.13x10^2$	$1.51x10^2$	$1.89x10^2$	$2.27x10^2$	$2.64x10^2$	$3.02x10^2$	$3.40x10^2$	$3.78x10^2$
ø32	Pull	-	-	90.5	$1.21x10^2$	$1.81x10^2$	$2.41x10^2$	$3.02x10^2$	$3.62x10^2$	$4.22x10^2$	$4.83x10^2$	$5.43x10^2$	$6.03x10^2$
ø40	Pull	-	-	$1.58x10^2$	$2.11x10^2$	$3.17x10^2$	$4.22x10^2$	$5.28x10^2$	$6.33x10^2$	$7.39x10^2$	$8.44x10^2$	$9.50x10^2$	$1.06x10^3$
ø50	Pull	-	-	$2.47x10^2$	$3.30x10^2$	$4.95x10^2$	$6.60x10^2$	$8.25x10^2$	$9.90x10^2$	$1.15x10^3$	$1.32x10^3$	$1.48x10^3$	$1.65x10^3$
ø63	Pull	-	$2.80x10^2$	$4.20x10^2$	$5.61x10^2$	$8.41x10^2$	$1.12x10^3$	$1.40x10^3$	$1.68x10^3$	$1.96x10^3$	$2.24x10^3$	$2.52x10^3$	$2.80x10^3$
ø80	Pull	-	$4.54x10^2$	$6.80x10^2$	$9.07x10^2$	$1.36x10^3$	$1.81x10^3$	$2.27x10^3$	$2.72x10^3$	$3.17x10^3$	$3.63x10^3$	$4.08x10^3$	$4.54x10^3$
ø100	Pull	-	$7.15x10^2$	$1.07x10^3$	$1.43x10^3$	$2.14x10^3$	$2.86x10^3$	$3.57x10^3$	$4.29x10^3$	$5.00x10^3$	$5.72x10^3$	$6.43x10^3$	$7.15x10^3$
ø125	Pull	$5.65x10^2$	$1.13x10^3$	$1.70x10^3$	$2.26x10^3$	$3.39x10^3$	$4.52x10^3$	$5.65x10^3$	$6.79x10^3$	$7.92x10^3$	$9.05x10^3$	$1.02x10^4$	$1.13x10^4$
ø140	Pull	$7.21x10^2$	$1.44x10^3$	$2.16x10^3$	$2.89x10^3$	$4.33x10^3$	$5.77x10^3$	$7.22x10^3$	$8.66x10^3$	$1.01x10^4$	$1.15x10^4$	$1.30x10^4$	$1.44x10^4$
ø160	Pull	$9.42x10^2$	$1.88x10^3$	$2.83x10^3$	$3.77x10^3$	$5.65x10^3$	$7.54x10^3$	$9.42x10^3$	$1.13x10^4$	$1.32x10^4$	$1.51x10^4$	$1.70x10^4$	$1.88x10^4$

How to order

No switch (without magnet for switch)

SSD-D - 12 ◯ - 5 ——— N - LB - I

With switch (built-in magnet for switch)

SSD-DL - 12 ◯ - 5 - T0H - R - N - LB - I

Ⓐ Bore size

Ⓑ Port thread

Ⓒ Stroke

Ⓓ Switch model No.
*1
*2
*9

Ⓔ Switch quantity

Ⓕ Option
*3

Ⓖ Mounting bracket
*4
*5
*10

Ⓗ Accessory
*6

Precautions for model No. selection

*1 : Switches other than Ⓓ Switch model No. are also available. (Made to order) Refer to Ending Page 1 for details.
2 : AC magnetic field proof switch and T8 switch cannot be installed on ø12 and ø16.
*3 : Piston rod of ø12 to ø25 is stainless steel as standard. C-snap ring is stainless steel instead of steel. The rod end male thread nut is stainless steel.
*4 : The mounting bracket is included at shipment.
*5 : The projection dimension of piston rod WF when LB2 or FA is selected is different from that of the standard. Refer to the dimensions on pages 1109 and 1110. The number of the specified protruding dimension will be added at the end of the model No. printed on the metal plate on the body.
*6 : Two units are included when "I" or "Y" is selected. One unit each is included when "IY" is selected.
*7 : Refer to Ending Page 85 for custom specifications of rod end form.
*8 : Refer to pages 1086 and 1091 for combinations of variations/options.
*9 : Switches are shipped with the product. Contact CKD if assembling before shipment is necessary.
*10 : Only LB and CB are available for ø125 to ø160.

[Example of model No.]

SSD-DL-12-5-T0H-R-N

Model: Compact cylinder double acting/double rod

Ⓐ Bore size : ø12 mm
Ⓑ Port thread : Rc thread
Ⓒ Stroke : 5 mm
Ⓓ Switch model No. : Reed T0H switch
· Lead wire length 1 m
Ⓔ Switch quantity : 1 on rod side
Ⓕ Option : Rod end male thread

How to order switch

SW - T0H

Switch model No.
(Item Ⓓ above)

Code	Description
Ⓐ Bore size (mm)	
12	ø12
16	ø16
20	ø20
25	ø25
32	ø32
40	ø40
50	ø50
63	ø63
80	ø80
100	ø100
125	ø125
140	ø140
160	ø160

Ⓑ Port thread

Blank	Rc thread
NN	NPT thread (ø32 and over) (made-to-order product)
GN	G thread (ø32 and over) (made-to-order product)

Ⓒ Stroke (mm)

Refer to the stroke table on the following page.

Ⓓ Switch model No.

Axial lead wire	Radial lead wire	Contact	Voltage AC	Voltage DC	Indicator	Lead wire
TOH*	T0V*	Reed	●	●	1-color LED	2-wire
T5H*	T5V*	Reed	●	●	No indicator lamp	2-wire
T8H*	T8V*	Reed	●	●	1-color LED	2-wire
T1H*	T1V*	Proximity	●		1-color LED	2-wire
T2H*	T2V*	Proximity		●	1-color LED	2-wire
T3H*	T3V*	Proximity		●	1-color LED	3-wire
T3PH*	T3PV*	Proximity		●	1-color LED	3-wire
T2WH*	T2WV*	Proximity		●	2-color LED	2-wire
T2YH*	T2YV*	Proximity		●	2-color LED	2-wire
T3WH*	T3WV*	Proximity		●	2-color LED	3-wire
T3YH*	T3YV*	Proximity		●	2-color LED	3-wire
T2JH*	T2JV*	Proximity		●	1-color LED off-delay	2-wire
T2YD*	-	Proximity		●	2-color LED AC magnetic field	2-wire
T2YDT*	-	Proximity		●	2-color LED AC magnetic field	2-wire
T2HR3	T2VR3	Proximity		●	1-color LED (bend resist lead wire specs)	2-wire

*** Lead wire length**

Blank	1 m (standard)
3	3 m (option)
5	5 m (option)

Ⓔ Switch quantity

R	1 on rod side
H	1 on head side
D	2

Ⓕ Option

Bore size (ø)		12	16	20	25	32	40	50	63	80	100	125	140	160
Blank	Rod end female thread	●	●	●	●	●	●	●	●	●	●	●	●	●
N	Rod end male thread	●	●	●	●	●	●	●	●	●	●	●	●	●
P6	Cu/PTFE free specs	Supported as standard							●	●	●			
M	Piston rod material (S.S.)	●	●	●	●	●	●	●	●	●	●			

Ⓖ Mounting bracket

LB	Axial foot
LB2	Axial foot (compact)
FA	Rod side flange

Ⓗ Accessory (available when rod end male thread "N" is selected)

I	Rod eye
I2	Rod eye (compact)
Y	Rod clevis (pin and snap ring included)
Y2	Rod clevis (compact) (pin and snap ring included)

[Stroke table]

Stroke (mm)		Applicable bore size												
		ø12	ø16	ø20	ø25	ø32	ø40	ø50	ø63	ø80	ø100	ø125	ø140	ø160
Standard stroke	5	●	●	●	●	●	●	●	●	●	●			
	10	●	●	●	●	●	●	●	●	●	●	●	●	●
	15	●	●	●	●	●	●	●						
	20	●	●	●	●	●	●	●	●	●	●	●	●	●
	25	●	●	●	●	●	●	●						
	30	●	●	●	●	●	●	●	●	●	●	●	●	●
	40				●	●	●	●	●	●	●	●	●	●
	50				●	●	●	●	●	●	●	●	●	●
	60											●	●	●
	70											●	●	●
	80											●	●	●
	90											●	●	●
	100											●	●	●
Min. stroke (mm) *1		1										10		
Max. stroke (mm)		30			50							300		
Custom stroke *2		In 1 mm increments												

1 : Less than 5 mm with 1-color LED switch and less than 10 mm with the 2-color LED, off-delay, AC magnetic field proof, T1 or T8* switch are not available.
Refer to page 1188 for the number of installed switches and the min. stroke.

*2 : Total length when using a custom stroke is different between ø12 to ø100 and ø125 to ø160 as below.
Please be careful.
[ø12 to ø100]
The dimensions of the total length with the custom stroke are the handled same as the next longer standard stroke.
[ø125 to ø160]
Total length dimension with custom stroke is handled as the custom stroke dedicated length.

*3 : Refer to pages 1320 and 1321 for the min. stroke with mounting brackets LB and LB2.

How to order mounting bracket

Bore size (mm) / Mounting bracket	ø12	ø16	ø20	ø25	ø32	ø40	ø50
Foot (LB)	SSD-LB-12	SSD-LB-16	SSD-LB-20	SSD-LB-25	SSD-LB-32	SSD-LB-40	SSD-LB-50
Foot (LB2)	SSD-LB2-12	SSD-LB2-16	SSD-LB2-20	SSD-LB2-25	SSD-LB2-32	SSD-LB2-40	SSD-LB2-50
Flange (FB)	SSD-FA-12	SSD-FA-16	SSD-FA-20	SSD-FA-25	SSD-FA-32	SSD-FA-40	SSD-FA-50
Bore size (mm) / Mounting bracket	**ø63**	**ø80**	**ø100**	**ø125**	**ø140**	**ø160**	
Foot (LB)	SSD-LB-63	SSD-LB-80	SSD-LB-100	SSD-LB-125	SSD-LB-140	SSD-LB-160	
Foot (LB2)	SSD-LB2-63	SSD-LB2-80	SSD-LB2-100	-	-	-	
Flange (FB)	SSD-FA-63	SSD-FA-80	SSD-FA-100	-	-	-	

*1: The foot mounting bracket is provided as 2 pcs./set.

SCP*3
CMK2
CMA2
SCM
SCG
SCA2
SCS2
CKV2
CAV2/COVP/N2
SSD2
SSG
SSD
CAT
MDC2
MVC
SMG
MSD/MSDG
FC*
STK
SRL3
SRG3
SRM3
SRT3
MRL2
MRG2
SM-25
ShkAbs
FJ
FK
Spd Contr
Ending

Internal structure and parts list

● SSD-DL-12 to 50 (double acting/double rod/with switch)

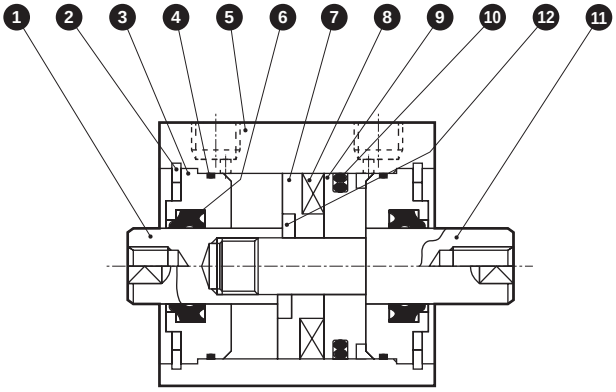

● SSD-D-12 to 50 (double acting/double rod)

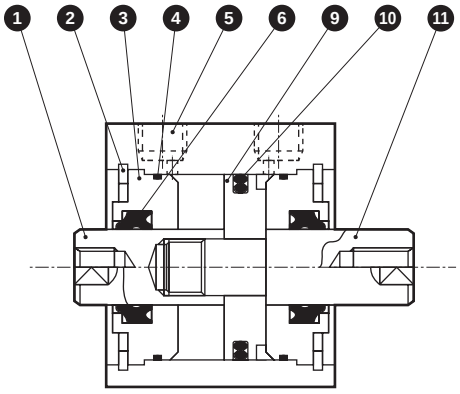

No.	Part name	Material	Remarks
1	Piston rod Ⓐ	ø12 to ø25: Stainless steel ø32 to ø50: Steel	ø16 to ø50: Industrial chrome plating
2	C-snap ring	Steel	Zinc phosphate
3	Rod metal	Special aluminum	Alumite
4	Rod metal gasket	Nitrile rubber	
5	Body	Aluminum alloy	Hard alumite
6	Rod packing	Nitrile rubber	
7	Spacer	ø12, ø20, ø32, ø40: Aluminum alloy ø16, ø25, ø50: Special resin	ø12, 20, 32, 40: Chromate

No.	Part name	Material	Remarks
8	Magnet	Plastic	
9	Piston	Aluminum alloy	Chromate
10	Piston packing	Nitrile rubber	
11	Piston rod Ⓑ	ø12 to ø25: Stainless steel ø32 to ø50: Steel	ø16 to ø50: Industrial chrome plating
12	Spacer washer	Stainless steel	ø25, 50

Repair parts list

Bore size (mm)	Kit No.	Repair parts No.
ø12	SSD-D-12K	❹ ❻ ❿
ø16	SSD-D-16K	
ø20	SSD-D-20K	
ø25	SSD-D-25K	
ø32	SSD-D-32K	
ø40	SSD-D-40K	
ø50	SSD-D-50K	

Internal structure and parts list

● SSD-DL-63 to 100 (double acting/double rod/with switch)

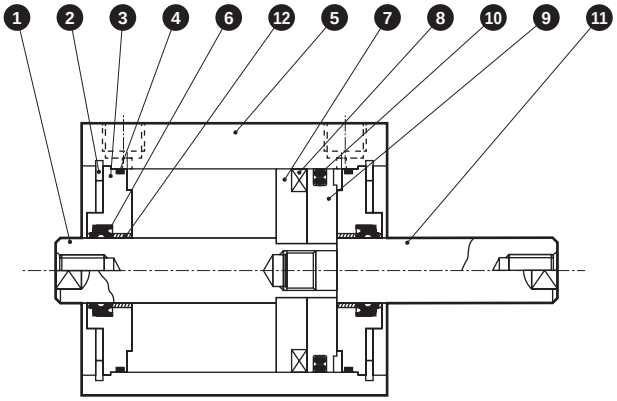

● SSD-D-63 to 100 (double acting/double rod)

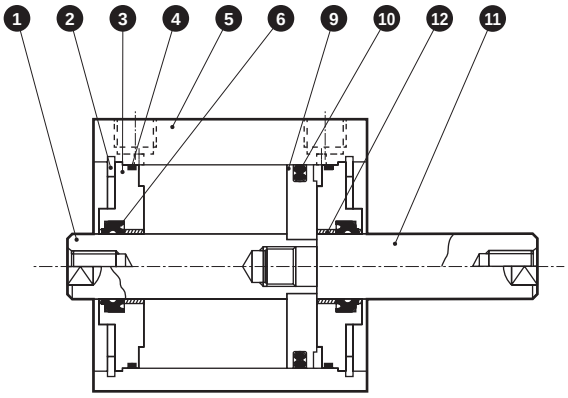

No.	Part name	Material	Remarks	No.	Part name	Material	Remarks
1	Piston rod Ⓐ	Steel	Industrial chrome plating	7	Spacer	Aluminum alloy	Chromate
2	C-snap ring	Steel	Zinc phosphate	8	Magnet	Plastic	
3	Rod metal	Aluminum alloy	Alumite	9	Piston	Aluminum alloy	Chromate
4	Rod metal gasket	Nitrile rubber		10	Piston packing	Nitrile rubber	
5	Body	Aluminum alloy	Hard alumite	11	Piston rod Ⓑ	Steel	Industrial chrome plating
6	Rod packing	Nitrile rubber		12	Bush	Oiles drymet	*1

*1: Material is steel for copper and PTFE free specifications.

Repair parts list

Bore size (mm)	Kit No.	Repair parts No.
ø63	SSD-D-63K	4 6 10
ø80	SSD-D-80K	
ø100	SSD-D-100K	

Internal structure and parts list

● SSD-DL-125 to 160 (double acting/double rod/with switch)

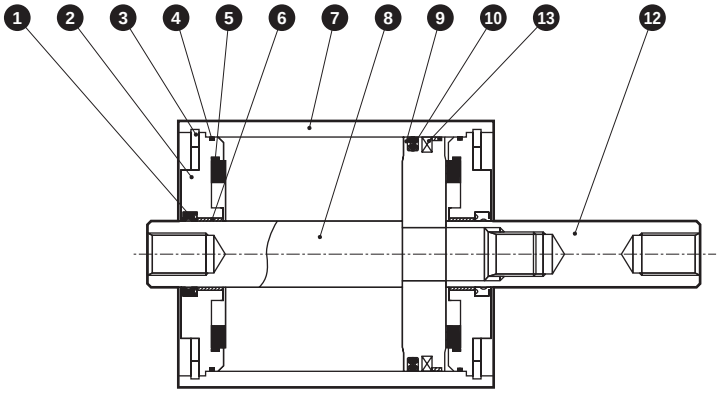

● SSD-D-125 to 160 (double acting/double rod)

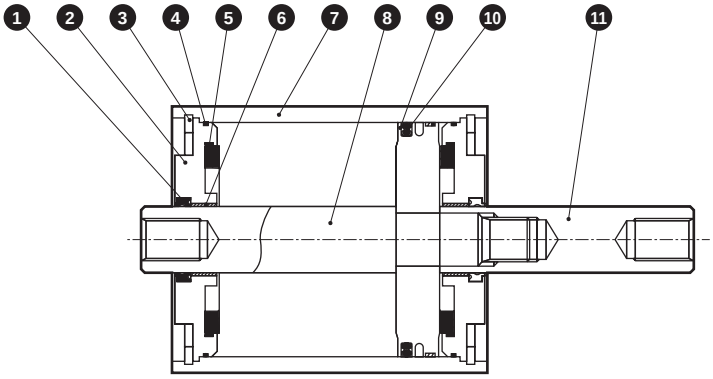

No.	Part name	Material	Remarks	No.	Part name	Material	Remarks
1	Rod packing	Nitrile rubber		8	Piston rod Ⓐ	Steel	Industrial chrome plating
2	Rod metal	Aluminum die-casting	Chromate	9	Piston	Aluminum die-casting	
3	C-snap ring	Steel	Zinc phosphate	10	Piston packing	Nitrile rubber	
4	Metal gasket	Nitrile rubber		11	Piston rod Ⓑ	Steel	Industrial chrome plating
5	Cushion rubber	Urethane rubber		12	Magnet	Rubber	SSD-DL only
6	Bush	Oiles drymet					
7	Body	Aluminum alloy	Hard alumite				

Repair parts kit

Bore size (mm)	Kit No.	Repair parts No.
ø125	SSD-D-125K	❶ ❹ ❺ ❿
ø140	SSD-D-140K	
ø160	SSD-D-160K	

*1: Specify the kit No. when placing an order.

MEMO

SCP*3
CMK2
CMA2
SCM
SCG
SCA2
SCS2
CKV2
CAV2/COVP/N2
SSD2
SSG
SSD
CAT
MDC2
MVC
SMG
MSD/MSDG
FC*
STK
SRL3
SRG3
SRM3
SRT3
MRL2
MRG2
SM-25
ShkAbs
FJ
FK
Spd Contr
Ending

Dimensions

● SSD-DL-12 to 25 (with switch)

ø12/ø16

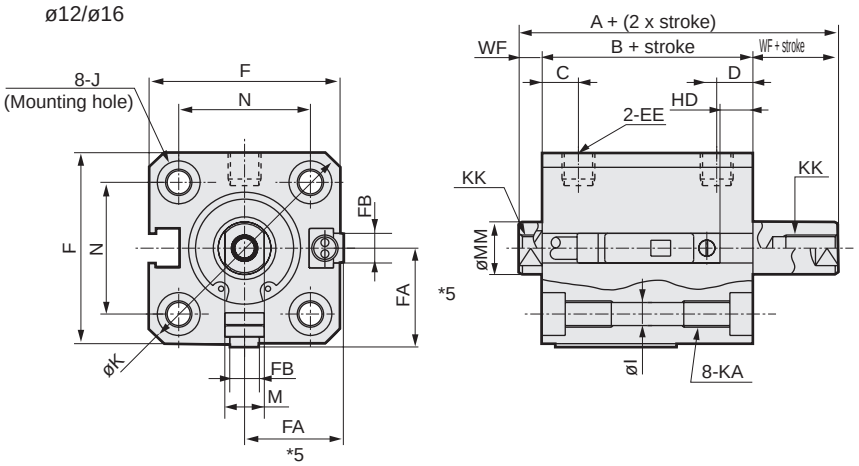

● Rod end male thread

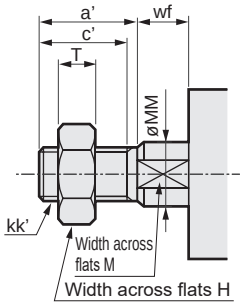

ø20/ø25

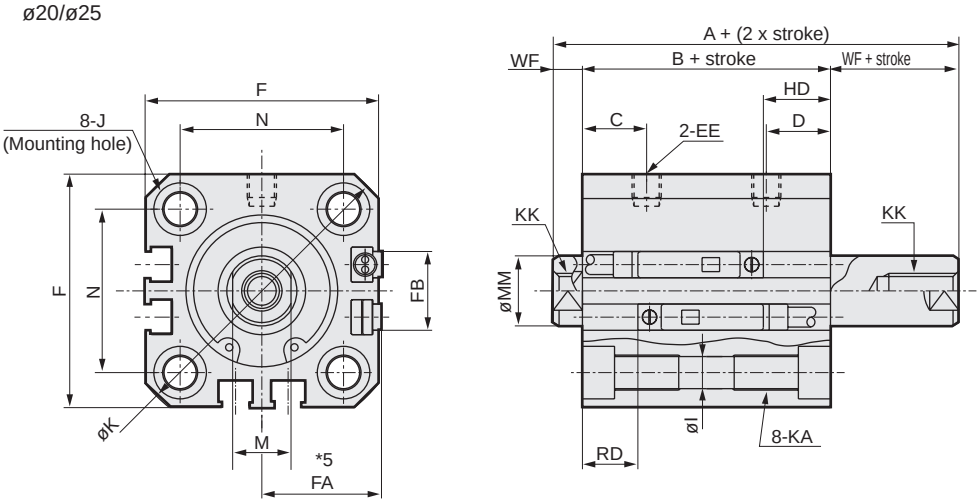

Note: The positions for the left and right widths across flats are unspecified.

Code / Bore size (mm)	Common dimensions with switch																
	A *1	B *1	C	D	EE	F	FA *5	FB	I	J	K	KA	KK	M	MM	N	WF
ø12	34	27	5.5	5.5	M5	25	13(16.5)	4.5	3.5	6.5 spot face depth 3.5	32	M4 depth 7	M3 depth 6	5	6	15.5	3.5
ø16	34	27	5.5	5.5	M5	29	15(18.5)	4.5	3.5	6.5 spot face depth 3.5	38	M4 depth 7	M4 depth 8	6	8	20	3.5
ø20	45	36	8	8	M5	36	18.5(22)	12.5	5.5	9 spot face depth 5.5	47	M6 depth 11	M5 depth 7	8	10	25.5	4.5
ø25	51	41	11	11	M5	40	20.5(24)	13.5	5.5	9 spot face depth 5.5	51	M6 depth 11	M6 depth 12	10	12	28	5

Switch dimensions / Bore size (mm)	Reed T0H/T0V, T5H/T5V		Proximity T2H/T2V, T3H/T3V T2WH/T2WV, T3WH/T3WV	
	HD *2	RD *2	HD *2	RD *2
ø12	5	2.5	5	2.5
ø16	5	2	5	2
ø20	9.5	6.5	9.5	6.5
ø25	11.5	9.5	11.5	9.5

- *1 : To calculate A+ (2 x stroke), B+ stroke or WF+ stroke when using a custom stroke, apply the next longer standard stroke (instead of the custom stroke) to the stroke value. Left and right projection dimensions of rod differ.
  (Example) If the custom stroke is 7 mm, apply the standard stroke of 10 mm.
- *2 : HD and RD dimensions for 5 mm stroke differ from these dimensions according to the setting.
- *3 : Refer to page 1312 for HD and RD dimensions of the 2-color LED, off-delay, AC magnetic field proof, T1* and T8* switches.
- *4 : Refer to page 1312 for the protruding dimensions of the 2-color LED, off-delay, AC magnetic field proof, T1* and T8* switches.
- *5 : Dimensions in ( ) of FA are for the L-shaped lead wire.
- *6 : For dimensions of individual accessories, refer to pages 1108 to 1115.

Dimensions of rod end male thread

Code / Bore size (mm)	a'	c'	H	kk'	M	MM	T	wf
ø 12	10.5	9	8	M5	5	6	3.2	3.5
ø 16	12	10	10	M6	6	8	3.6	3.5
ø 20	14	12	13	M8	8	10	5	4.5
ø 25	17.5	15	17	M10x1.25	10	12	6	5

Dimensions

● SSD-D-12 to 25 (without switch)

ø12/ø16

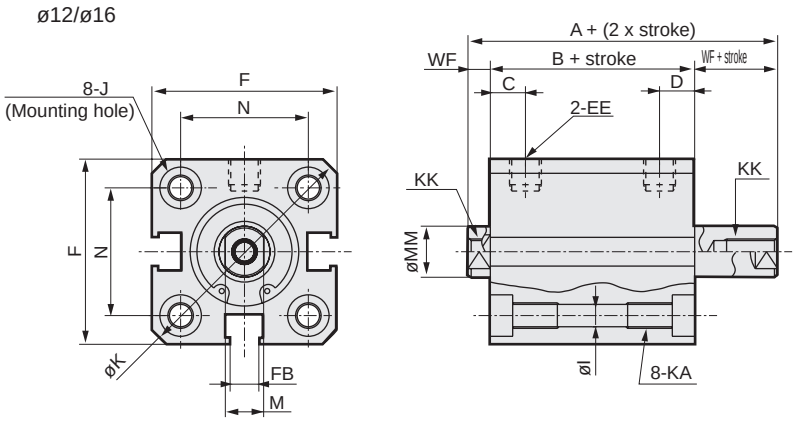

● Rod end male thread

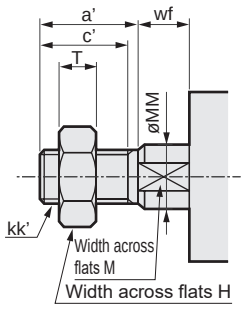

ø20/ø25

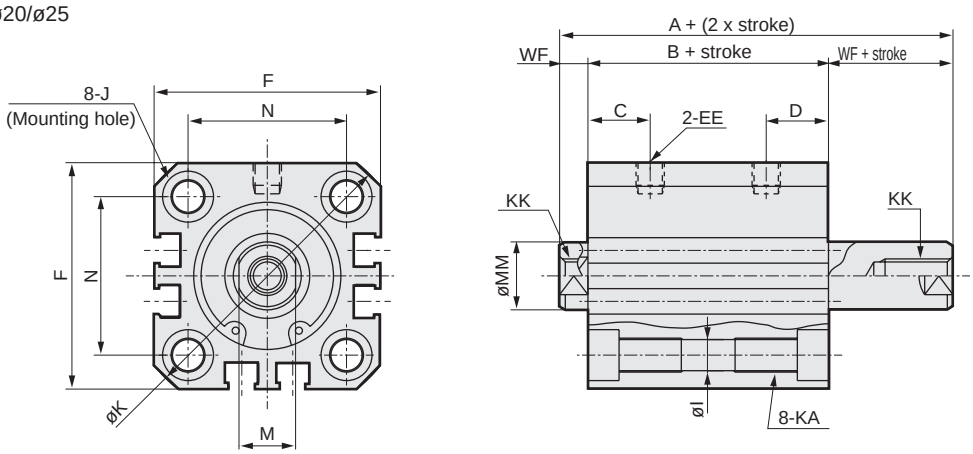

Note: The positions for the left and right widths across flats are unspecified.

Code / Bore size (mm)	Dimensions without switch and common dimensions															
	A *1	B *1	C	D	EE	F	FB	I	J	K	KA	KK	M	MM	N	WF
ø12	29	22	5.5	5.5	M5	25	4.5	3.5	6.5 spot face depth 3.5	32	M4 depth 7	M3 depth 6	5	6	15.5	3.5
ø16	29	22	5.5	5.5	M5	29	4.5	3.5	6.5 spot face depth 3.5	38	M4 depth 7	M4 depth 8	6	8	20	3.5
ø20	35	26	8	8	M5	36	12.5	5.5	9 spot face depth 5.5	47	M6 depth 11	M5 depth 7	8	10	25.5	4.5
ø25	41	31	11	11	M5	40	13.5	5.5	9 spot face depth 5.5	51	M6 depth 11	M6 depth 12	10	12	28	5

Dimensions of rod end male thread

Code / Bore size (mm)	a'	c'	H	kk'	M	MM	T	wf
ø 12	10.5	9	8	M5	5	6	3.2	3.5
ø 16	12	10	10	M6	6	8	3.6	3.5
ø 20	14	12	13	M8	8	10	5	4.5
ø 25	17.5	15	17	M10x1.25	10	12	6	5

● *1 : To calculate A+ (2 x stroke), B+ stroke or WF+ stroke when using a custom stroke, apply the next longer standard stroke (instead of the custom stroke) to the stroke value. Left and right projection dimensions of rod differ.
(Example) If the custom stroke is 7 mm, apply the standard stroke of 10 mm.

● *2 : For dimensions of individual accessories, refer to pages 1108 to 1115.

Dimensions

● SSD-DL-32 to 100 (with switch)

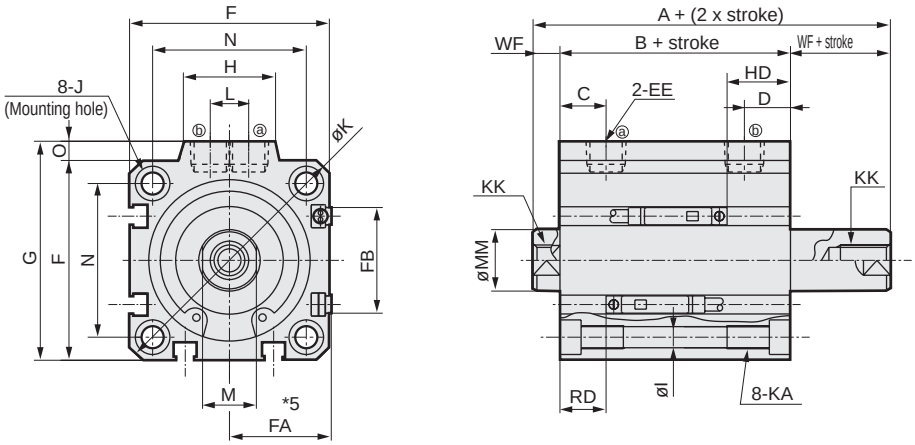

● Rod end male thread

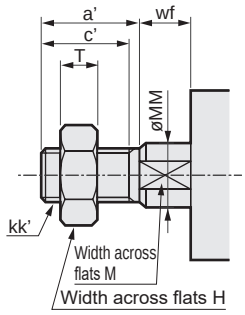

[Bore size ø100]

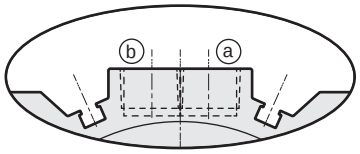

* Only for ø100, the port surface has switch grooves.

● SSD-D-32 to 100 (without switch)

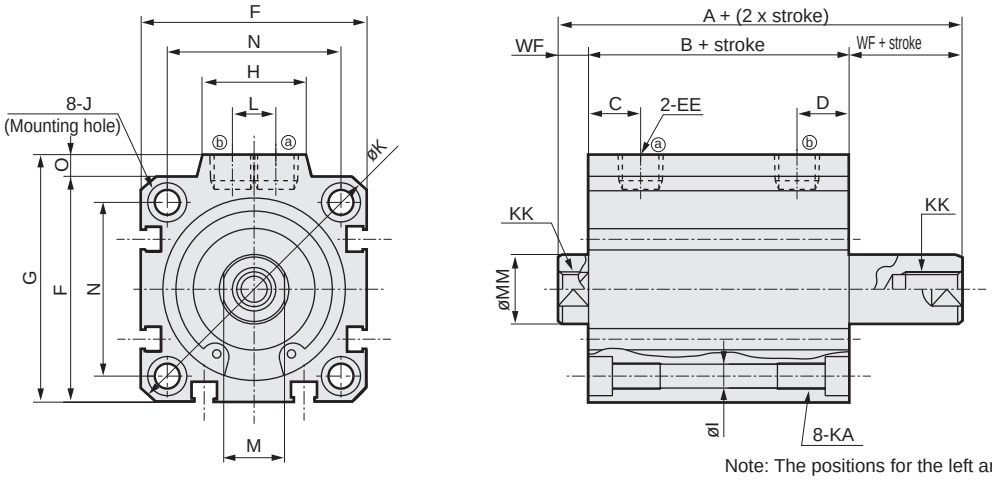

Note: The positions for the left and right widths across flats are unspecified.

Code / Bore size (mm)	No switch A *1	No switch B *1	Common dimensions with switch A *1	B *1	C	D	EE	F	FA *5	FB	G	H	I	J	K	KA	KK	L	M	MM	N	O	WF
ø32	44.5	30.5	54.5	40.5	8	8	Rc1/8	45	23(26.5)	20.5	49.5	24	5.5	9 spot face Depth 5.5	60	M6 depth 11	M8 depth 13	10	14	16	34	4.5	7
ø40	53	39	63	49	12	12	Rc1/8	52	26.5(30)	27.5	57	24	5.5	9 spot face Depth 5.5	69	M6 depth 11	M8 depth 13	10	14	16	40	5	7
ø50	55	39	65	49	10.5	10.5	Rc1/4	64	32.5(36)	28.5	71	33	6.9	11 spot face Depth 6.5	86	M8 depth 13	M10 depth 15	15	17	20	50	7	8
ø63	57	41	67	51	13	13	Rc1/4	77	39(42.5)	28.5	84	33	8.7	14 spot face Depth 9	103	M10 depth 25	M10 depth 15	15	17	20	60	7	8
ø80	68.5	48.5	78.5	58.5	16	16	Rc3/8	98	49.5(53)	28.5	104	38	10.5	17.5 spot face Depth 11	132	M12 depth 28	M16 depth 21	15	22	25	77	6	10
ø100	82	58	92	68	23	23	Rc3/8	117	59(62.5)	28.5	123.5	38	10.5	17.5 spot face Depth 11	156	M12 depth 28	M20 depth 27	15	27	30	94	6.5	12

Switch dimensions / Bore size (mm)	Reed T0H/T0V, T5H/T5V HD *2	Reed T0H/T0V, T5H/T5V RD *2	Proximity T2H/T2V, T3H/T3V T2WH/T2WV, T3WH/T3WV HD *2	Proximity T2H/T2V, T3H/T3V T2WH/T2WV, T3WH/T3WV RD *2
ø32	11	9	11	9
ø40	16.5	12	16.5	12
ø50	16.5	12.5	16.5	12.5
ø63	18	13	18	13
ø80	23	15.5	23	15.5
ø100	28.5	19.5	28.5	19.5

- *1 : To calculate A + (2 x stroke), B + stroke or WF + stroke when using a custom stroke, apply the next longer standard stroke (instead of the custom stroke) to the stroke value. Left and right projection dimensions of rod differ. (Example) If the custom stroke is 7 mm, apply the standard stroke of 10 mm.
- *2 : HD and RD dimensions for 5 mm stroke differ from these dimensions according to the setting.
- *3 : Refer to page 1313 for HD and RD dimensions of the 2-color LED, off-delay, AC magnetic field proof, T1* and T8* switches.
- *4 : Refer to page 1313 for the protruding dimensions of the 2-color LED, off-delay, AC magnetic field proof, T1* and T8* switches.
- *5 : Dimensions in ( ) of FA are for the L-shaped lead wire.
- *6 : For dimensions of individual accessories, refer to pages 1108 to 1115.

Dimensions of rod end male thread

Code / Bore size (mm)	a'	c'	H	kk'	M	MM	T	wf
ø 32	23.5	20.5	22	M14x1.5	14	16	8	5
ø 40	23.5	20.5	22	M14x1.5	14	16	8	5
ø 50	28.5	26	27	M18x1.5	17	20	11	5
ø 63	28.5	26	27	M18x1.5	17	20	11	5
ø 80	35.5	32.5	32	M22x1.5	22	25	13	8
ø100	35.5	32.5	41	M26x1.5	27	30	16	8

Dimensions

● SSD-DL-125 to 160 (double acting/double rod/with switch)

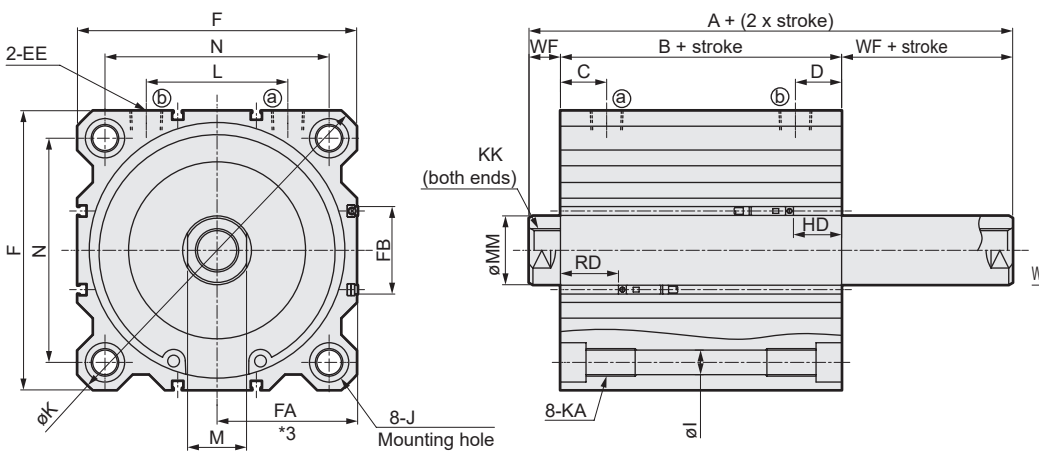

● Rod end male thread

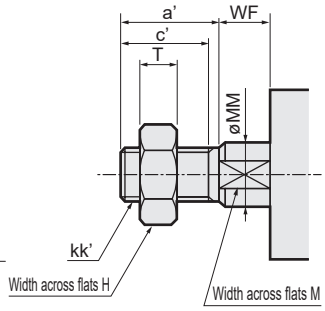

● SSD-D-125 to 160 (double acting/double rod)

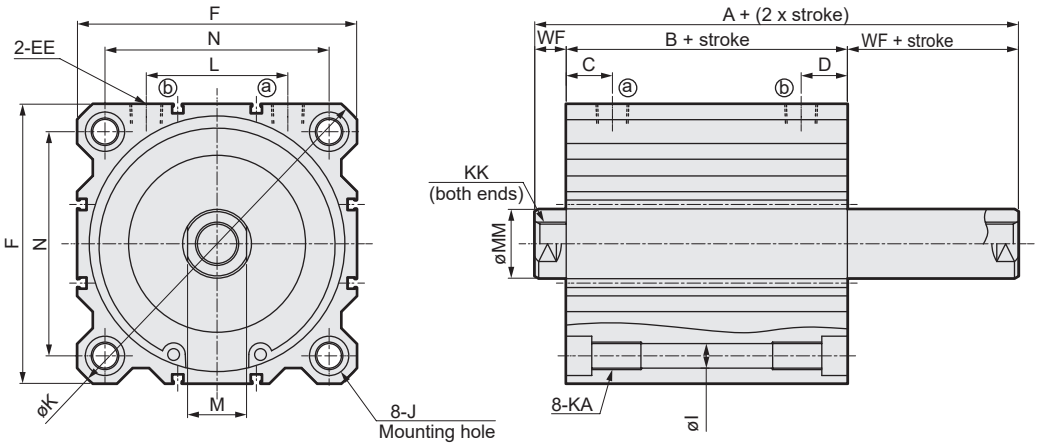

Code	Common dimensions with switch												
Bore size (mm)	A	B	C	D	EE	F	FA (*3)	FB	I	J	K	KA	KK (*2)
ø125	104	72	23.5	23.5	Rc3/8	142	71.5(75)	44.5	12.5	20 spot face depth 13	190	M14 Depth 25	M22x2.5 Depth 30 (22)
ø140	114	82	27	27	Rc3/8	158	79.5(83)	44.5	12.5	20 spot face depth 13	210	M14 Depth 25	M22x2.5 Depth 30 (22)
ø160	125	91	30	30	Rc3/8	178	89.5(93)	48.5	14.7	23 spot face depth 15.2	238	M16 Depth 28	M24x3 Depth 33 (24)

Code						Reed T0H/T0V, T5H/T5V		Proximity T2H/T2V, T3H/T3V T2WH/T2WV, T3WH/T3WV	
Bore size (mm)	L	M	MM	N	WF	HD	RD	HD	RD
ø125	72	30	35	114	16	24.5	29.5	24.5	29.5
ø140	80	30	35	128	16	31	33	31	33
ø160	90	36	40	144	17	34	39	34	39

*1 : Refer to page 1313 for HD and RD dimensions of the 2-color LED, off-delay, AC magnetic field proof switches.
*2 : Values in ( ) for KK dimensions indicate effective thread length on one side with 10 mm stroke.
*3 : Dimensions in ( ) of FA are for the L-shaped lead wire.
*4: The positions for the left and right widths across flats are unspecified.

Dimensions of rod end male thread

Code / Bore size (mm)	a'	c'	H	kk'	M	MM	T	wf
ø125	45	42	46	M30x1.5	30	35	18	13
ø140	45	42	46	M30x1.5	30	35	18	13
ø160	50	47	55	M36x1.5	36	40	21	14

* For dimensions of individual accessories, refer to pages 1108 to 1115.

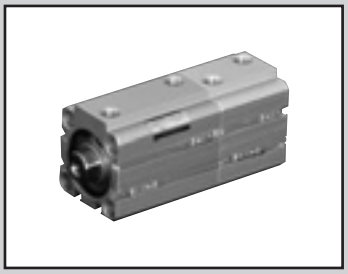

Compact cylinder double acting/back to back

SSD-B Series

● Bore size: ø12/ø16/ø20/ø25/ø32/ø40/ø50/ø63/ø80/ø100

JIS symbol

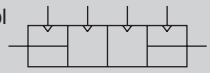

RoHS CAD

Specifications

Item	SSD-B SSD-BL (with switch)									
Bore size mm	ø12	ø16	ø20	ø25	ø32	ø40	ø50	ø63	ø80	ø100
Actuation	Double acting/back to back									
Working fluid	Compressed air									
Max. working pressure MPa	1.0 (≈150 psi, 10 bar)									
Min. working pressure MPa	0.1 (≈15 psi, 1 bar)							0.05 (≈7.3 psi, 0.5 bar)		
Proof pressure MPa	1.6 (≈230 psi, 16 bar)									
Ambient temperature °C	-10 (14°F) to 60 (140°F) (no freezing)									
Port size	M5				Rc1/8		Rc1/4		Rc3/8	
Stroke tolerance mm	$S_1 = {}^{+1.0}_{0}$						$S_2 = {}^{+1.0}_{0}$			
Working piston speed mm/s	50 to 500							50 to 300		
Cushion	None									
Lubrication	Not required (use turbine oil ISO VG32 if necessary for lubrication)									
Allowable absorbed energy J	0.004	0.01	0.016	0.021	0.025	0.092	0.1	0.12	0.27	0.56

Stroke

Bore size (mm)	Standard stroke (mm)	Max. stroke (mm)	Min. stroke (mm)
ø12	5, 10, 15, 20, 25, 30	30	1
ø16			
ø20			
ø25	5, 10, 15, 20, 25, 30, 40, 50	50	
ø32			
ø40			
ø50			
ø63	5, 10, 20, 30, 40, 50	50	
ø80			
ø100			

*1: The custom stroke is available in 1 mm increments. However, the total length is the same as that of the next longer standard stroke.
*2: When using the type with switch, refer to the table below.

Number of installed switches and min. stroke (mm)

Switch quantity	1	2	3	4	5
Switch model No. / Bore size (mm)	T*	T*	T*	T*	T*
ø12	5	5	25	-	-
ø16	5	5	25	-	-
ø20	5	5	-	-	-
ø25	5	5	35	50	-
ø32	5	5	35	50	-
ø40	5	5	35	50	-
ø50	5	5	35	50	-
ø63	5	5	35	50	-
ø80	5	5	35	50	-
ø100	5	5	35	50	-

Note: Less than 10 mm with the 2-color LED, off-delay, AC magnetic field proof, T1* or T8* switch is not available.

Switch specifications

● 1-color/2-color LED/for AC magnetic field proof

Item	2-wire proximity				3-wire proximity				2-wire reed							2-wire proximity
	T1H/ T1V	T2H/T2V/ T2JH/T2JV	T2YH/ T2YV	T2WH/ T2WV	T3H/ T3V	T3PH/ T3PV	T3YH/ T3YV	T3WH/ T3WV	T0H/T0V		T5H/T5V		T8H/T8V			T2YD (*4) T2YDT
Applications	For programmable controller, relay, compact solenoid valve	Dedicated for programmable controller			For programmable controller, relay				For programmable controller, relay		For programmable controller, relay (no lamp), serial		For programmable controller, relay			Dedicated for programmable controller
Output method	-				NPN output	PNP output	NPN output	NPN output	-							
Pwr. supp. V.	-				10 to 28 VDC				-							
Load voltage	85 to 265 VAC	10 to 30 VDC		24 VDC ±10%	30 VDC or less				12/24 VDC	100/110 VAC	5/12/24 VDC	100/110 VAC	12/24 VDC	110 VAC	220 VAC	24 VDC ±10%
Load current	5 to 100 mA	5 to 20 mA (*3)			100 mA or less		50 mA or less		5 to 50 mA	7 to 20 mA	50 mA or less	20 mA or less	5 to 50 mA	7 to 20 mA	7 to 10 mA	5 to 20 mA
Indicator	LED (Lit when ON)	LED (Lit when ON)	Red/green LED (Lit when ON)	Red/green LED (Lit when ON)	LED (Lit when ON)	Yellow LED (Lit when ON)	Red/green LED (Lit when ON)	Red/green LED (Lit when ON)	LED (Lit when ON)		No indicator lamp		LED (Lit when ON)			Red/green LED (Lit when ON)
Leakage current	≤ 1 mA at 100 VAC, ≤ 2 mA at 200 VAC	1 mA or less			10 μA or less				0 mA							1 mA or less
Weight g	1 m:33 3 m:87 5 m:142	1 m:18 3 m:49 5 m:80	1 m:33 3 m:87 5 m:142	1 m:18 3 m:49 5 m:80	1 m:18 3 m:49 5 m:80		1 m:33 3 m:87 5 m:142	1 m:18 3 m:49 5 m:80	1 m:18 3 m:49 5 m:80				1 m:33 3 m:87 5 m:142			1 m:61 3 m:166 5 m:272

*1 : Refer to Ending Page 1 for detailed switch specifications and dimensions.
*2 : Switches other than the above models, such as switches with connectors, are also available. Refer to Ending Page 1.
*3 : The max. load current is 20 mA at 25°C. The current is lower than 20 mA if the operating ambient temperature around the switch is higher than 25°C. (5 to 10 mA at 60°C)
*4 : Switch for AC magnetic field (T2YD/T2YDT) cannot be used in DC magnetic field.

Cylinder weight table (the weight of the switches is when there are 2 cylinder switches.)

(Unit: g)

Stroke (mm)	5		10		15		20		25		30		40		50	
Bore size (mm)	No switch	Switch	No switch	Switch	No switch	Switch	No switch	Switch	No switch	Switch	No switch	Switch	No switch	Switch	No switch	Switch
ø12	84	188	102	188	122	208	140	226	160	246	178	264	-	-	-	-
ø16	108	224	132	224	154	246	178	270	202	294	226	318	-	-	-	-
ø20	160	278	188	346	218	376	248	406	276	434	306	464	-	-	-	-
ø25	212	402	246	436	282	472	318	508	354	544	388	578	460	650	530	720
ø32	282	518	330	566	378	614	426	662	472	708	520	756	616	852	710	946
ø40	404	698	462	756	518	812	578	870	634	928	690	984	804	1098	918	1212
ø50	682	1086	774	1178	866	1270	958	1362	1050	1454	1144	1548	1328	1732	1512	1916
ø63	1044	1626	1166	1748	-	-	1410	1992	-	-	1654	2236	1900	2482	2144	2726
ø80	1920	2778	2110	2968	-	-	2488	3348	-	-	2868	3730	3252	4114	3634	4500
ø100	2908	4074	3152	4320	-	-	3640	4810	-	-	4132	5302	4622	5796	5118	6292

Theoretical thrust table

(Unit: N)

Bore size (mm)	Operating direction	Working pressure MPa											
		0.05	0.1	0.15	0.2	0.3	0.4	0.5	0.6	0.7	0.8	0.9	1.0
ø12	Push	-	11.3	17.0	22.6	33.9	45.2	56.5	67.9	79.2	90.5	$1.02x10^2$	$1.13x10^2$
	Pull	-	8.48	12.7	17.0	25.4	33.9	42.4	50.9	59.4	67.9	76.3	84.8
ø16	Push	-	20.1	30.2	40.2	60.3	80.4	$1.01x10^2$	$1.21x10^2$	$1.41x10^2$	$1.61x10^2$	$1.81x10^2$	$2.01x10^2$
	Pull	-	15.1	22.6	30.2	45.2	60.3	75.4	90.5	$1.06x10^2$	$1.21x10^2$	$1.36x10^2$	$1.51x10^2$
ø20	Push	-	31.4	47.1	62.8	94.2	$1.26x10^2$	$1.57x10^2$	$1.88x10^2$	$2.20x10^2$	$2.51x10^2$	$2.83x10^2$	$3.14x10^2$
	Pull	-	23.6	35.3	47.1	70.7	94.2	$1.18x10^2$	$1.41x10^2$	$1.65x10^2$	$1.88x10^2$	$2.12x10^2$	$2.36x10^2$
ø25	Push	-	49.1	73.6	98.2	$1.47x10^2$	$1.96x10^2$	$2.45x10^2$	$2.95x10^2$	$3.44x10^2$	$3.93x10^2$	$4.42x10^2$	$4.91x10^2$
	Pull	-	37.8	56.7	75.6	$1.13x10^2$	$1.51x10^2$	$1.89x10^2$	$2.27x10^2$	$2.64x10^2$	$3.02x10^2$	$3.40x10^2$	$3.78x10^2$
ø32	Push	-	80.4	$1.21x10^2$	$1.61x10^2$	$2.41x10^2$	$3.22x10^2$	$4.02x10^2$	$4.83x10^2$	$5.63x10^2$	$6.43x10^2$	$7.24x10^2$	$8.04x10^2$
	Pull	-	60.3	90.5	$1.21x10^2$	$1.81x10^2$	$2.41x10^2$	$3.02x10^2$	$3.62x10^2$	$4.22x10^2$	$4.83x10^2$	$5.43x10^2$	$6.03x10^2$
ø40	Push	-	$1.26x10^2$	$1.88x10^2$	$2.51x10^2$	$3.77x10^2$	$5.03x10^2$	$6.28x10^2$	$7.54x10^2$	$8.80x10^2$	$1.01x10^3$	$1.13x10^3$	$1.26x10^3$
	Pull	-	$1.06x10^2$	$1.58x10^2$	$2.11x10^2$	$3.17x10^2$	$4.22x10^2$	$5.28x10^2$	$6.33x10^2$	$7.39x10^2$	$8.44x10^2$	$9.50x10^2$	$1.06x10^3$
ø50	Push	-	$1.96x10^2$	$2.95x10^2$	$3.93x10^2$	$5.89x10^2$	$7.85x10^2$	$9.82x10^2$	$1.18x10^3$	$1.37x10^3$	$1.57x10^3$	$1.77x10^3$	$1.96x10^3$
	Pull	-	$1.65x10^2$	$2.47x10^2$	$3.30x10^2$	$4.95x10^2$	$6.60x10^2$	$8.25x10^2$	$9.90x10^2$	$1.15x10^3$	$1.32x10^3$	$1.48x10^3$	$1.65x10^3$
ø63	Push	$1.56x10^2$	$3.12x10^2$	$4.68x10^2$	$6.23x10^2$	$9.35x10^2$	$1.25x10^3$	$1.56x10^3$	$1.87x10^3$	$2.18x10^3$	$2.49x10^3$	$2.81x10^3$	$3.12x10^3$
	Pull	$1.40x10^2$	$2.80x10^2$	$4.20x10^2$	$5.61x10^2$	$8.41x10^2$	$1.12x10^3$	$1.40x10^3$	$1.68x10^3$	$1.96x10^3$	$2.24x10^3$	$2.52x10^3$	$2.80x10^3$
ø80	Push	$2.51x10^2$	$5.03x10^2$	$7.54x10^2$	$1.01x10^3$	$1.51x10^3$	$2.01x10^3$	$2.51x10^3$	$3.02x10^3$	$3.52x10^3$	$4.02x10^3$	$4.52x10^3$	$5.03x10^3$
	Pull	$2.27x10^2$	$4.54x10^2$	$6.80x10^2$	$9.07x10^2$	$1.36x10^3$	$1.81x10^3$	$2.27x10^3$	$2.72x10^3$	$3.17x10^3$	$3.63x10^3$	$4.08x10^3$	$4.54x10^3$
ø100	Push	$3.93x10^2$	$7.85x10^2$	$1.18x10^3$	$1.57x10^3$	$2.36x10^3$	$3.14x10^3$	$3.93x10^3$	$4.71x10^3$	$5.50x10^3$	$6.28x10^3$	$7.07x10^3$	$7.85x10^3$
	Pull	$3.57x10^2$	$7.15x10^2$	$1.07x10^3$	$1.43x10^3$	$2.14x10^3$	$2.86x10^3$	$3.57x10^3$	$4.29x10^3$	$5.00x10^3$	$5.72x10^3$	$6.43x10^3$	$7.15x10^3$

How to order

No switch (without magnet for switch)

SSD-B — 12 - ○ 5 — N - 10 — N - I

With switch (built-in magnet for switch)

SSD-BL - 12 - ○ 5 - T0H - R - N - 10 - T0H - R - N - I

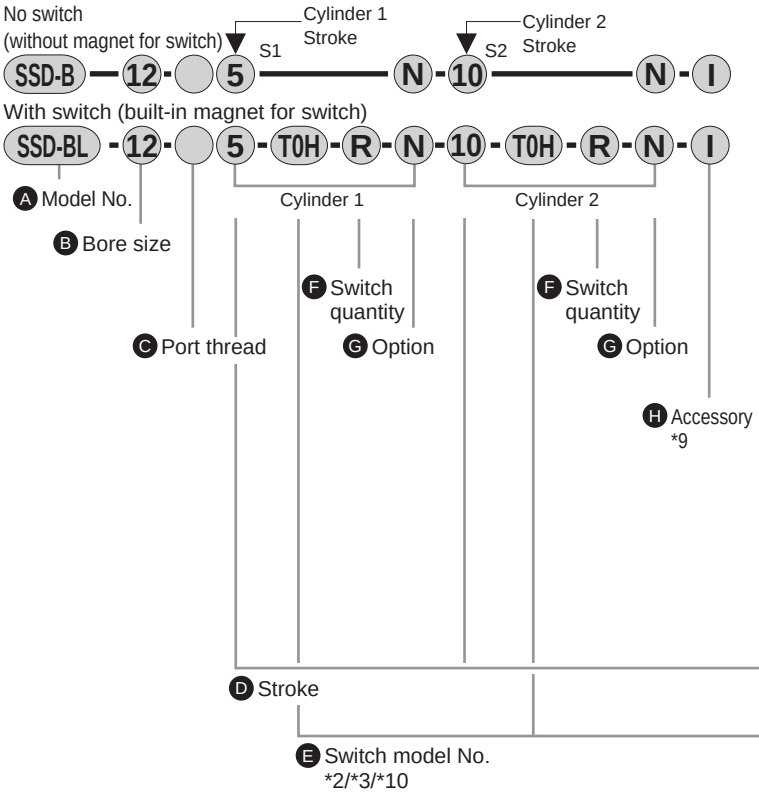

Code	Description
Ⓐ Model No.	
SSD-B	Double acting/back to back
SSD-BL	Double acting/back to back/with switch
SSD-BL1	ø12, ø16 2-color LED, off-delay, with T1* switch
Ⓑ Bore size (mm)	
12	ø12
16	ø16
20	ø20
25	ø25
32	ø32
40	ø40
50	ø50
63	ø63
80	ø80
100	ø100
Ⓒ Port thread	
Blank	Rc thread
NN	NPT thread (ø32 and over) (made-to-order product)
GN	G thread (ø32 and over) (made-to-order product)
Ⓓ Stroke (mm)	
Refer to the stroke table on the following page.	

Ⓔ Switch model No.

Axial lead wire	Radial lead wire	Contact	Voltage AC	Voltage DC	Indicator	Lead wire
TOH*	T0V*	Reed	●	●	1-color LED	2-wire
T5H*	T5V*	Reed	●	●	No indicator lamp	2-wire
T8H*	T8V*	Reed	●	●	1-color LED	2-wire
T1H*	T1V*	Proximity	●		1-color LED	2-wire
T2H*	T2V*	Proximity		●	1-color LED	2-wire
T3H*	T3V*	Proximity		●	1-color LED	3-wire
T3PH*	T3PV*	Proximity		●	1-color LED	3-wire
T2WH*	T2WV*	Proximity		●	2-color LED	2-wire
T2YH*	T2YV*	Proximity		●	2-color LED	2-wire
T3WH*	T3WV*	Proximity		●	2-color LED	3-wire
T3YH*	T3YV*	Proximity		●	2-color LED	3-wire
T2JH*	T2JV*	Proximity		●	1-color LED off-delay	2-wire
T2YD*	-	Proximity		●	2-color LED AC magnetic field	2-wire
T2YDT*	-	Proximity		●	2-color LED AC magnetic field	2-wire
T2HR3	T2VR3	Proximity		●	1-color LED (bend resist lead wire specs)	2-wire

* Lead wire length	
Blank	1 m (standard)
3	3 m (option)
5	5 m (option)
Ⓕ Switch quantity	
R	1 on rod side
H	1 on head side
D	2
Ⓖ Option	
Blank	Rod end female thread
N	Rod end male thread
M *8	Piston rod material (stainless steel)
Ⓗ Accessory (available when rod end male thread "N" is selected)	
I	Rod eye
I2	Rod eye (compact)
Y	Rod clevis (pin and snap ring included)
Y2	Rod clevis (compact) (pin and snap ring included)

⚠ Precautions for model No. selection

*1 : When two cylinders are connected, the connection is from Cylinder 2 side. (Refer to dimensions)
Determine cylinders 1 and 2 with the mounting method in mind.
*2 : Switches other than switch model No. are also available. (Made to order) Refer to Ending Page 1 for details.
3 : An AC magnetic field proof switch cannot be installed on ø12 and ø16. In addition, T8 switch cannot be installed on ø12 to ø32.
*4 : Copper and PTFE free as standard for SSD-B-12 to 50.
*5 : The mounting bracket is included at shipment.
*6 : Refer to Ending Page 85 for custom specifications of rod end form.
*7 : Refer to pages 1086 and 1089 for combinations of variations/options.
*8 : Option code "N" will be inscribed on both S1 and S2 sides, but for all other option codes, they will only be written on S2.
*9 : Two units are included when an accessory is selected. One unit each is included when "IY" is selected.
*10 : Switches are shipped with the product. Contact CKD if assembling before shipment is necessary.
*11 : When S1 stroke is at or below that in the table below, the length of the usable mounting bolts will differ from the standard and so contact CKD.

Bore size	No switch	With switch
	S1 stroke	
ø20	10 or less	-
ø25	5 or less	-
ø32	5 or less	-
ø50	5 or less	-
ø63	15 or less	5 or less
ø80	20 or less	10 or less
ø100	10 or less	-

[Example of model No.]

SSD-BL-12-5-T0H-R-N-10-T0H-R-N

Model: Compact cylinder, back to back

Ⓑ Bore size : ø12 mm
Ⓒ Port thread : Rc thread
Ⓓ Stroke S1 : 5 mm
Ⓔ Switch model No. : Reed switch T0H, lead wire 1 m
Ⓕ Switch quantity : 1 on rod side
Ⓒ Option : Rod end male thread
Ⓓ Stroke S2 : 10 mm
Ⓔ Switch model No. : Reed switch T0H, lead wire 1 m
Ⓕ Switch quantity : 1 on rod side
Ⓖ Option : Rod end male thread

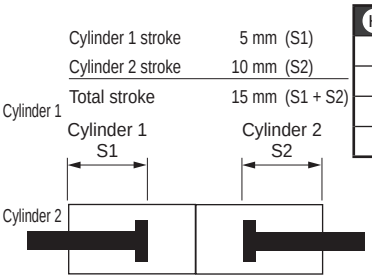

How to order switch

SW - **T0H**

Switch model No.
(Item Ⓔ on page 1202)

[Stroke table]

Stroke (mm)		Applicable bore size									
		ø12	ø16	ø20	ø25	ø32	ø40	ø50	ø63	ø80	ø100
Standard stroke	5	●	●	●	●	●	●	●	●	●	●
	10	●	●	●	●	●	●	●	●	●	●
	15	●	●	●	●	●	●	●			
	20	●	●	●	●	●	●	●	●	●	●
	25	●	●	●	●	●	●	●			
	30	●	●	●	●	●	●	●	●	●	●
	40				●	●	●	●	●	●	●
	50				●	●	●	●	●	●	●
Min. stroke (mm) *1		1									
Max. stroke (mm)		30			50						
Custom stroke *2		In 1 mm increments									

1 : Less than 5 mm with 1-color LED switch and less than 10 mm with the 2-color LED, off-delay, AC magnetic field proof, T1 or T8* switch are not available.
Refer to page 1200 for the number of installed switches and the min. stroke.
*2 : The total length is the same as that of the next longer standard stroke.

Internal structure and parts list

● SSD-BL-12 to 25 (double acting/back to back/with switch)

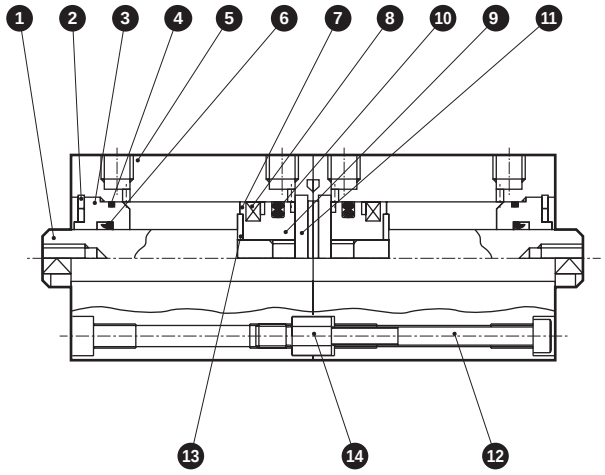

● SSD-BL-32 to 50 (double acting/back to back/with switch)

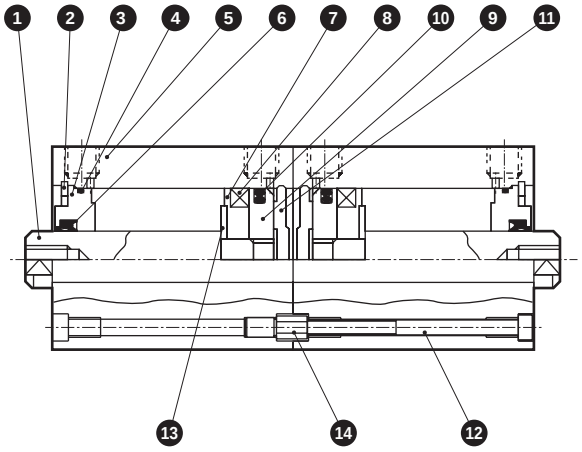

● SSD-B-12 to 25 (double acting/back to back)

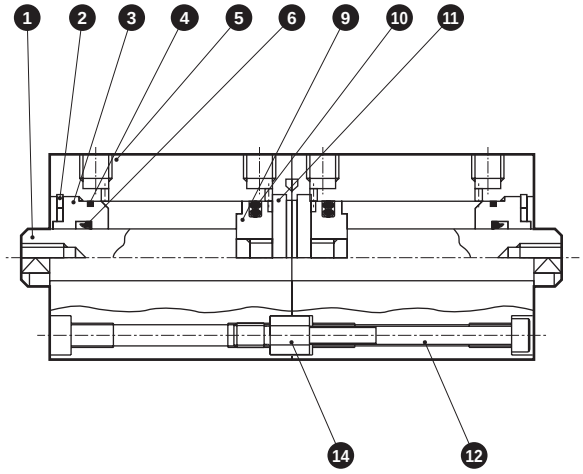

● SSD-B-32 to 50 (double acting/back to back)

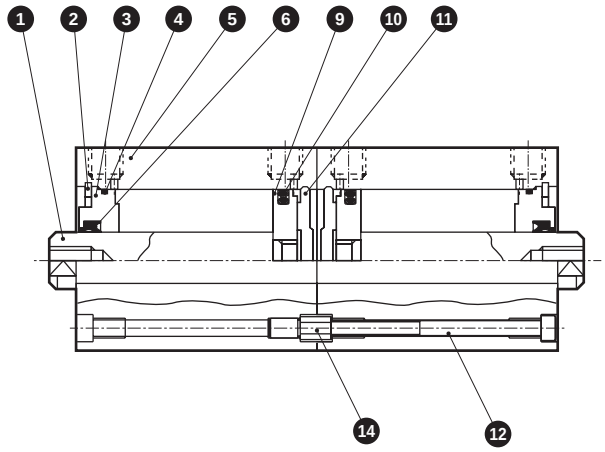

No.	Part name	Material	Remarks
1	Piston rod	ø12 to ø25: Stainless steel ø32 to ø50: Steel	Industrial chrome plating
2	C-snap ring	Steel	Zinc phosphate
3	Rod metal	Special aluminum	Alumite
4	Rod metal gasket	Nitrile rubber	
5	Body	Aluminum alloy	Hard alumite
6	Rod packing	Nitrile rubber	
7	Spacer	ø12: Aluminum alloy ø16 to ø50: Special resin	ø12: Chromate
8	Magnet	Plastic	
9	Piston	Aluminum alloy	Chromate
10	Piston packing	Nitrile rubber	
11	Cover	ø12 to ø25: Stainless steel ø32 to ø50: Aluminum alloy	ø32 to ø50: Alumite
12	Hex socket screw	Alloy steel	Black finish
13	Spacer washer	Stainless steel	ø12 to ø50
14	Connector	Steel	Zinc chromate

Repair parts list

Bore size (mm)	Kit No.	Repair parts No.
ø12	SSD-B-12K	4 6 10
ø16	SSD-B-16K	
ø20	SSD-B-20K	
ø25	SSD-B-25K	
ø32	SSD-B-32K	
ø40	SSD-B-40K	
ø50	SSD-B-50K	

SSD-B application examples

When the same strokes are combined, 3 positions are possible.

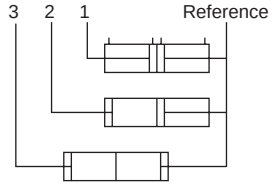

When different strokes are combined, 4 positions are possible.

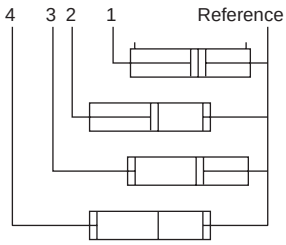

Internal structure and parts list

● SSD-BL-63 to 100 (double acting/back to back/with switch)

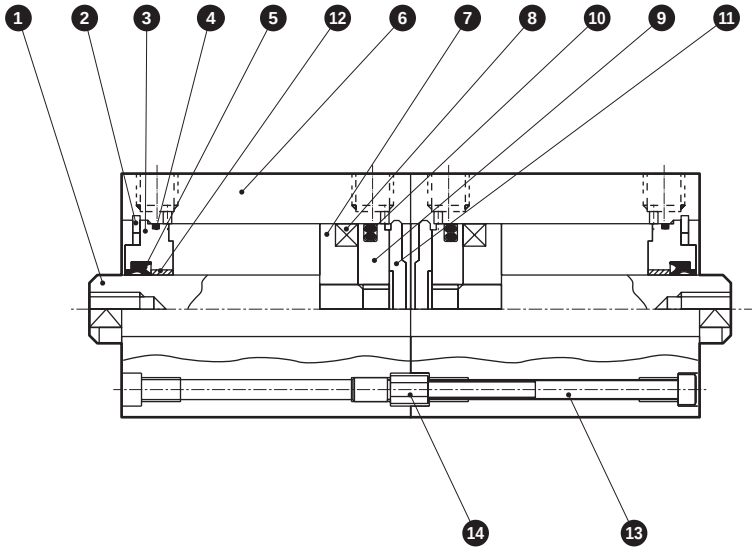

● SSD-B-63 to 100 (double acting/back to back)

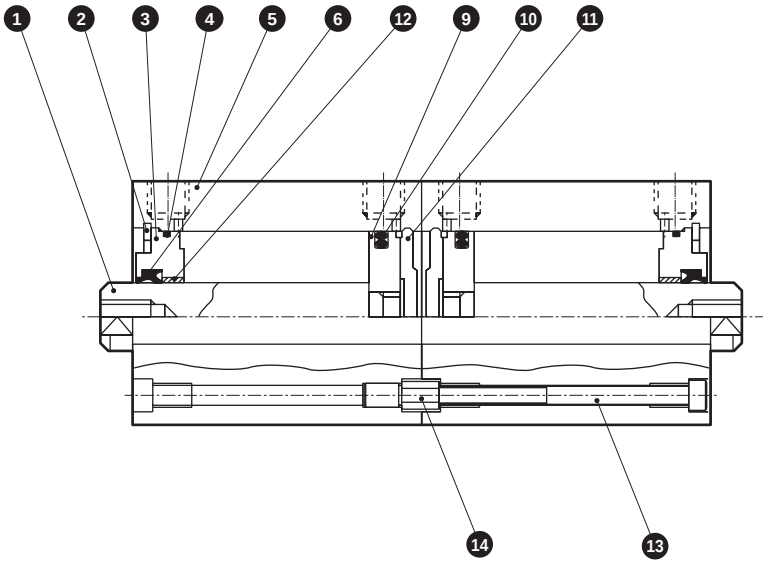

No.	Part name	Material	Remarks
1	Piston rod	ø12 to ø25: Stainless steel ø32 to ø50: Steel	Industrial chrome plating
2	C-snap ring	Steel	Zinc phosphate
3	Rod metal	Aluminum alloy	Alumite
4	Rod metal gasket	Nitrile rubber	
5	Body	Aluminum alloy	Hard alumite
6	Rod packing	Nitrile rubber	
7	Spacer	Aluminum alloy	Chromate

No.	Part name	Material	Remarks
8	Magnet	Plastic	
9	Piston	Aluminum alloy	Chromate
10	Piston packing	Nitrile rubber	
11	Cover	Aluminum alloy	Alumite
12	Bush	Oiles drymet	
13	Hex socket screw	Alloy steel	Black finish
14	Connector	Steel	Zinc chromate

Repair parts list

Bore size (mm)	Kit No.	Repair parts No.
ø63	SSD-B-63K	❹ ❻ ❿
ø80	SSD-B-80K	
ø100	SSD-B-100K	

Dimensions

● SSD-BL-12/16 (with switch)

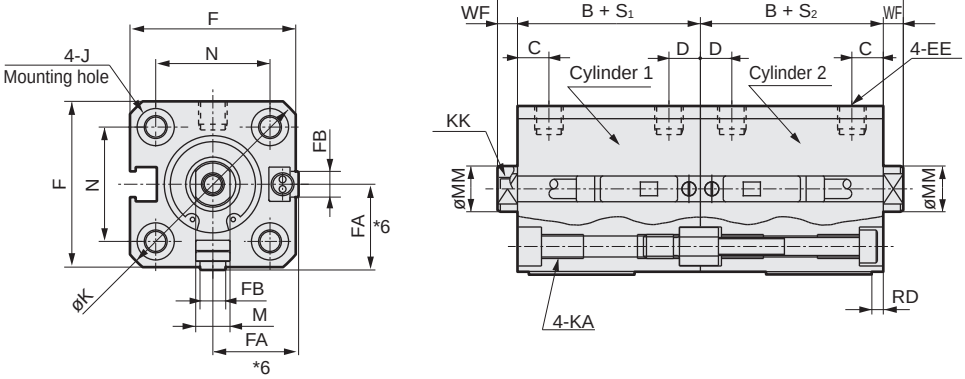

● Rod end male thread

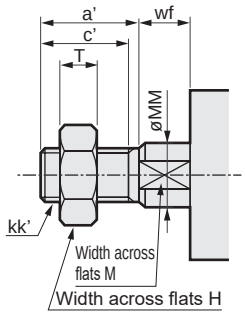

● SSD-BL-12/16 (without switch)

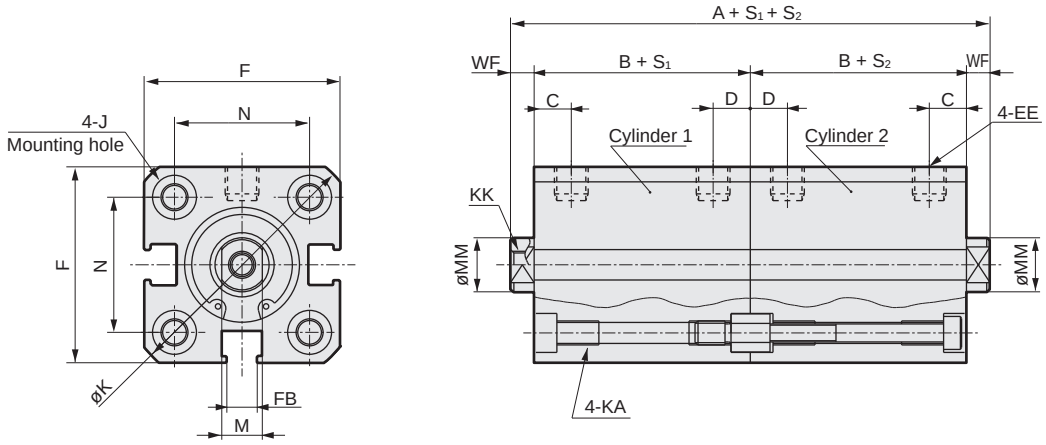

Code	No switch		Common dimensions with switch															
Bore size (mm)	A *1	B *1	A *1	B *1	C	D	EE	F	FA *6	FB	J	K	KA	KK	M	MM	N	WF
ø12	41	17	51	22	5.5	5.5	M5	25	13(16.5)	4.5	6.5 spot face depth 3.5	32	M4 depth 7	M3 depth 6	5	6	15.5	3.5
ø16	41	17	51	22	5.5	5.5	M5	29	15(18.5)	4.5	6.5 spot face depth 3.5	38	M4 depth 7	M4 depth 8	6	8	20	3.5

Switch dimensions	Reed T0H/T0V, T5H/T5V		Proximity T2H/T2V, T3H/T3V T2WH/T2WV, T3WH/T3WV	
Bore size (mm)	HD *2	RD *2	HD *2	RD *2
ø12	0	2.5	0	2.5
ø16	0	2	0	2

● *1 : To calculate A + S_1 + S_2 or B + S_1 + S_2 when using custom stroke, apply the next longer standard strokes (instead of the custom stroke) to the stroke value.
(Example) If the custom stroke is 7 mm, apply the standard stroke of 10 mm.

● *2 : HD and RD dimensions for 5 mm stroke differ from these dimensions according to the setting.

● *3 : When the stroke S_1 or S_2 is 5 mm for ø12 or ø16 with switch in the dimensions table above, (B+S_1), (B+S_2), and (A+S_1+S_2) are as shown in the table below.

Code / Bore size	Conditions	B + S_1	B + S_2	A + S_1 + S_2
ø12 ø16	S_1 = 5	32	22 + S_2	61 + S_2
	S_2 = 5	22 + S_1	32	61 + S_1
	When S_1 = S_2 = 5	32	32	71

The dimensions of S_1/S_2 with the custom stroke are the same as those of the next longer standard stroke.

● *4 : Refer to page 1312 for HD and RD dimensions for the 2-color LED, off-delay, AC magnetic field proof, T1* and T8* switches.

● *5 : Refer to page 1312 for the protruding dimensions of the 2-color LED, off-delay, AC magnetic field proof, T1* and T8* switches.

● *6 : Dimensions in ( ) of FA are for the L-shaped lead wire.

● *7 : For dimensions of individual accessories, refer to pages 1108 to 1115.

Dimensions of rod end male thread

Code / Bore size (mm)	a'	c'	H	kk'	M	MM	T	wf
ø 12	10.5	9	8	M5	5	6	3.2	3.5
ø 16	12	10	10	M6	6	8	3.6	3.5

Dimensions

● SSD-BL-20/25 (with switch)

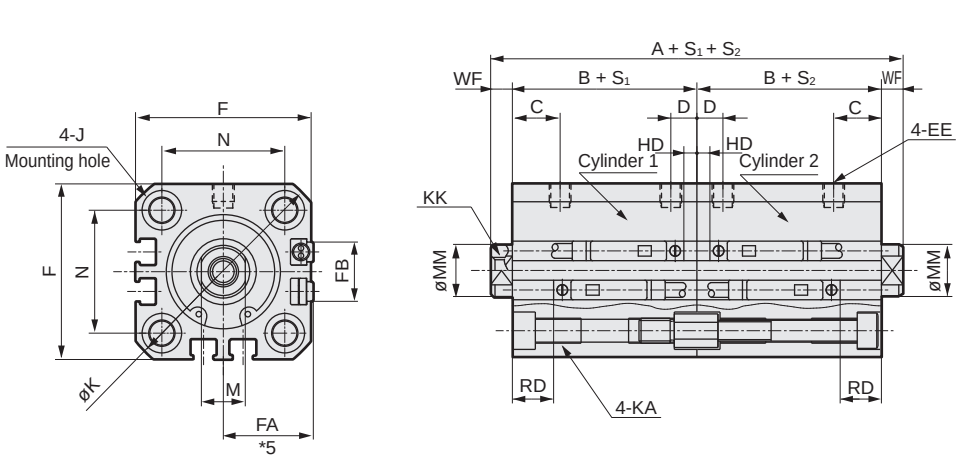

● Rod end male thread

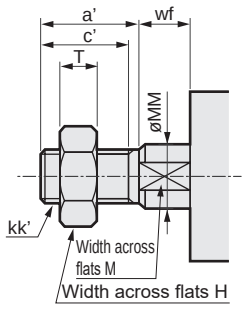

● SSD-B-20/25 (without switch)

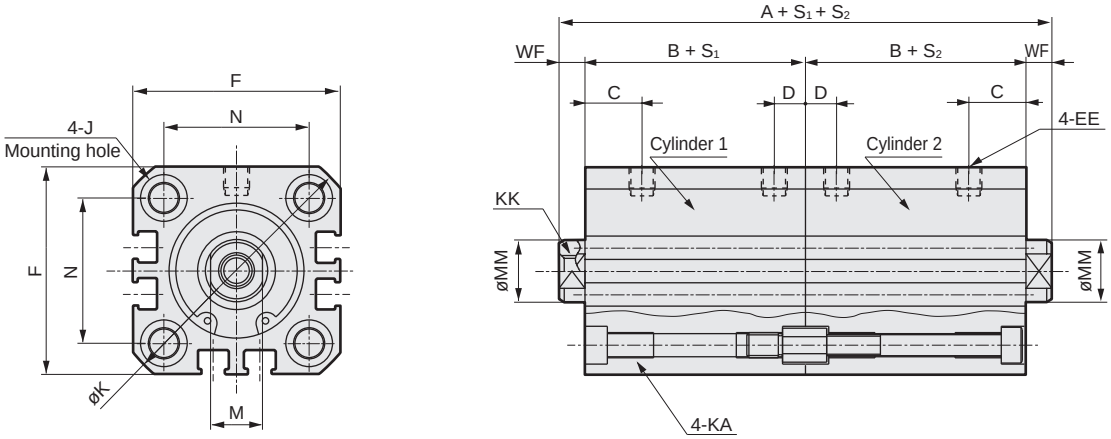

Code / Bore size (mm)	No switch A *1	No switch B *1	Common dimensions with switch A *1	B *1	C	D	EE	F	FA *5	FB	J	K	KA	KK	M	MM	N	WF
ø20	48	19.5	68	29.5	8	5.5	M5	36	18.5(22)	12.5	9 spot face depth 5.5	47	M6 depth 11	M5 depth 7	8	10	25.5	4.5
ø25	55	22.5	75	32.5	11	6	M5	40	20.5(24)	13.5	9 spot face depth 5.5	51	M6 depth 11	M6 depth 12	10	12	28	5

Switch dimensions / Bore size (mm)	Reed T0H/T0V, T5H/T5V HD *2	Reed T0H/T0V, T5H/T5V RD *2	Proximity T2H/T2V, T3H/T3V T2WH/T2WV, T3WH/T3WV HD *2	Proximity T2H/T2V, T3H/T3V T2WH/T2WV, T3WH/T3WV RD *2
ø20	3	6.5	3	6.5
ø25	3	9.5	3	9.5

- *1 : To calculate A + S_1 + S_2 or B + S_1 + S_2 when using custom stroke, apply the next longer standard stroke (instead of the custom stroke) to the stroke value.
  (Example) If the custom stroke is 7 mm, apply the standard stroke of 10 mm.
- *2 : HD and RD dimensions for 5 mm stroke differ from these dimensions according to the setting.
- *3 : Refer to page 1312 for HD and RD dimensions for the 2-color LED, off-delay, AC magnetic field proof, T1* and T8* switches.
- *4 : Refer to page 1312 for the protruding dimensions of the 2-color LED, off-delay, AC magnetic field proof, T1* and T8* switches.
- *5 : Dimensions in ( ) of FA are for the L-shaped lead wire.
- *6 : For dimensions of individual accessories, refer to pages 1108 to 1115.

Dimensions of rod end male thread

Code / Bore size (mm)	a'	c'	H	kk'	M	MM	T	wf
ø 20	14	12	13	M8	8	10	5	4.5
ø 25	17.5	15	17	M10x1.25	10	12	6	5

SCP*3
CMK2
CMA2
SCM
SCG
SCA2
SCS2
CKV2
CAV2/COVP/N2
SSD2
SSG
SSD
CAT
MDC2
MVC
SMG
MSD/MSDG
FC*
STK
SRL3
SRG3
SRM3
SRT3
MRL2
MRG2
SM-25
ShkAbs
FJ
FK
Spd Contr
Ending

Dimensions

● SSD-BL-32 to 100 (with switch)

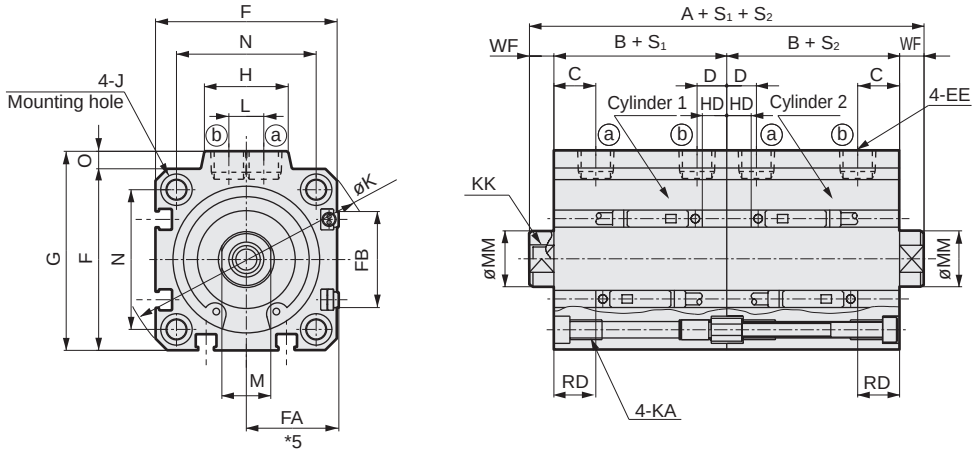

● Rod end male thread

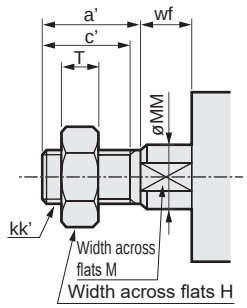

● SSD-B-32 to 100 (without switch)

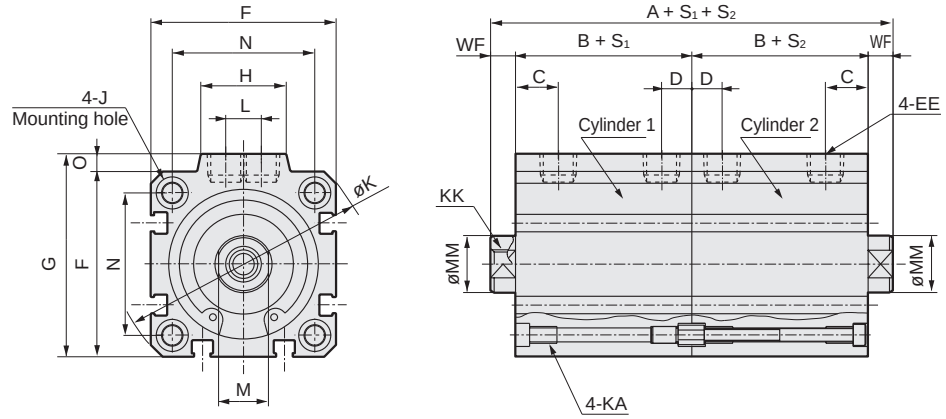

[Bore size ø100]

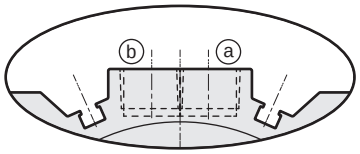

* Only for ø100, the port surface has switch grooves.

Code / Bore size (mm)	No switch A *1	No switch B *1	Common dimensions with switch A *1	B *1	C	D	EE	F	FA *5	FB	G	H	J	K	KA	KK	L	M	MM	N	O	WF
ø32	60	23	80	33	8	8	Rc1/8	45	23(26.5)	20.5	49.5	24	9 spot face depth 5.5	60	M6 depth 11	M8 depth 13	10	14	16	34	4.5	7
ø40	73	29.5	93	39.5	12	8.5	Rc1/8	52	26.5(30)	27.5	57	24	9 spot face depth 5.5	69	M6 depth 11	M8 depth 13	10	14	16	40	5	7
ø50	77	30.5	97	40.5	10.5	10.5	Rc1/4	64	32.5(36)	28.5	71	33	11 spot face depth 6.5	86	M8 depth 13	M10 depth 15	15	17	20	50	7	8
ø63	88	36	108	46	13	11	Rc1/4	77	39(42.5)	28.5	84	33	14 spot face depth 9	103	M10 depth 25	M10 depth 15	15	17	20	60	7	8
ø80	107	43.5	127	53.5	16	13	Rc3/8	98	49.5(53)	28.5	104	38	17.5 spot face depth 11	132	M12 depth 28	M16 depth 21	15	22	25	77	6	10
ø100	130	53	150	63	23	15	Rc3/8	117	59(62.5)	28.5	123.5	38	17.5 spot face depth 11	156	M12 depth 28	M20 depth 27	15	27	30	94	6.5	12

Switch dimensions / Bore size (mm)	Reed T0H/T0V, T5H/T5V HD *2	Reed T0H/T0V, T5H/T5V RD *2	Proximity T2H/T2V, T3H/T3V T2WH/T2WV, T3WH/T3WV HD *2	Proximity RD *2
ø32	3.5	9	3.5	9
ø40	7	12	7	12
ø50	7.5	12.5	7.5	12.5
ø63	12.5	13	12.5	13
ø80	17.5	15.5	17.5	15.5
ø100	23	19.5	23	19.5

- *1 : To calculate A + S_1 + S_2 or B + S_1 + S_2 when using custom stroke, apply the next longer standard stroke (instead of the custom stroke) to the stroke value. (Example) If the custom stroke is 7 mm, apply the standard stroke of 10 mm.
- *2 : HD and RD dimensions for 5 mm stroke differ from these dimensions according to the setting.
- *3 : Refer to page 1313 for HD and RD dimensions of the 2-color LED, off-delay, AC magnetic field proof, T1* and T8* switches.
- *4 : Refer to page 1313 for the protruding dimensions of the 2-color LED, off-delay, AC magnetic field proof, T1* and T8* switches.
- *5 : Dimensions in ( ) of FA are for the L-shaped lead wire.

Dimensions of rod end male thread

Code / Bore size (mm)	a'	c'	H	kk'	M	MM	T	wf
ø 32	23.5	20.5	22	M14x1.5	14	16	8	5
ø 40	23.5	20.5	22	M14x1.5	14	16	8	5
ø 50	28.5	26	27	M18x1.5	17	20	11	5
ø 63	28.5	26	27	M18x1.5	17	20	11	5
ø 80	35.5	32.5	32	M22x1.5	22	25	13	8
ø100	35.5	32.5	41	M26x1.5	27	30	16	8

* For dimensions of individual accessories, refer to pages 1108 to 1115.

MEMO

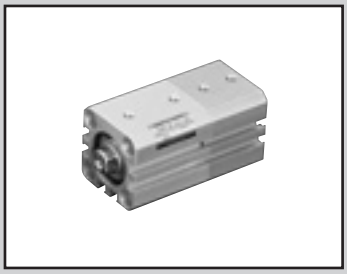

Compact cylinder double acting/2-stage

SSD-W Series

● Bore size: ø12/ø16/ø20/ø25/ø32/ø40/ø50/ø63/ø80/ø100

RoHS CAD

Specifications

Item	SSD-W SSD-WL (with switch)									
Bore size mm	ø12	ø16	ø20	ø25	ø32	ø40	ø50	ø63	ø80	ø100
Actuation	Double acting/2-stage									
Working fluid	Compressed air									
Max. working pressure MPa	1.0 (≈150 psi, 10 bar) (Note)									
Min. working pressure MPa	0.15 (≈22 psi, 1.5 bar)							0.1 (≈15 psi, 1 bar)		
Proof pressure MPa	1.6 (≈230 psi, 16 bar)									
Ambient temperature °C	-10 (14°F) to 60 (140°F) (no freezing)									
Port size	M5				Rc1/8		Rc1/4		Rc3/8	
Stroke tolerance mm	$S_1 = {}^{+1.0}_{0}$						$S_2 = {}^{0}_{-1.5}$			
Working piston speed mm/s	50 to 500							50 to 300		
Cushion	None									
Lubrication	Not required (use turbine oil ISO VG32 if necessary for lubrication)									
Allowable absorbed energy J	0.004	0.01	0.016	0.021	0.025	0.092	0.1	0.12	0.27	0.56

Note: The max. working pressure is 0.5 MPa when S1 and S2 are the same.

Stroke

Bore size (mm)	Standard stroke (mm)	Max. stroke (mm)	Min. stroke (mm)
ø12	5, 10, 15, 20, 25, 30	30	1
ø16			
ø20			
ø25	5, 10, 15, 20, 25, 30, 40, 50	50	
ø32			
ø40			
ø50			
ø63	5, 10, 20, 30, 40, 50	50	
ø80			
ø100			

*1) The custom stroke is available in 1 mm increments. However, the total length is the same as that of the next longer standard stroke.
*2) When using the type with a switch, refer to the table below.

Number of installed switches and min. stroke (mm)

Switch quantity	1	2	3	4	5
Switch model No. / Bore size (mm)	T*	T*	T*	T*	T*
ø12	5	5	25	-	-
ø16	5	5	25	-	-
ø20	5	5	-	-	-
ø25	5	5	35	50	-
ø32	5	5	35	50	-
ø40	5	5	35	50	-
ø50	5	5	35	50	-
ø63	5	5	35	55	-
ø80	5	5	35	55	-
ø100	5	5	35	55	-

Note: Less than 10 mm with the 2-color LED, off-delay, AC magnetic field proof, T1* or T8* switch is not available.

Switch specifications

● 1-color/2-color LED/for AC magnetic field proof

Item	2-wire proximity				3-wire proximity				2-wire reed							2-wire proximity
	T1H/ T1V	T2H/T2V/ T2JH/T2JV	T2YH/ T2YV	T2WH/ T2WV	T3H/ T3V	T3PH/ T3PV	T3YH/ T3YV	T3WH/ T3WV	T0H/T0V		T5H/T5V		T8H/T8V			T2YD (*4) T2YDT
Applications	For programmable controller, relay, compact solenoid valve	Dedicated for programmable controller			For programmable controller, relay				For programmable controller, relay		For programmable controller, relay (no lamp), serial		For programmable controller, relay			Dedicated for programmable controller
Output method	-				NPN output	PNP output	NPN output	NPN output	-							
Pwr. supp. V.	-				10 to 28 VDC				-							
Load voltage	85 to 265 VAC	10 to 30 VDC		24 VDC ±10%	30 VDC or less				12/24 VDC	100/110 VAC	5/12/24 VDC	100/110 VAC	12/24 VDC	110 VAC	220 VAC	24 VDC ±10%
Load current	5 to 100 mA	5 to 20 mA (*3)			100 mA or less		50 mA or less		5 to 50 mA	7 to 20 mA	50 mA or less	20 mA or less	5 to 50 mA	7 to 20 mA	7 to 10 mA	5 to 20 mA
Indicator	LED (Lit when ON)	LED (Lit when ON)	Red/green LED (Lit when ON)	Red/green LED (Lit when ON)	LED (Lit when ON)	Yellow LED (Lit when ON)	Red/green LED (Lit when ON)	Red/green LED (Lit when ON)	LED (Lit when ON)		No indicator lamp		LED (Lit when ON)			Red/green LED (Lit when ON)
Leakage current	≤ 1 mA at 100 VAC, ≤ 2 mA at 200 VAC	1 mA or less			10 μA or less				0 mA							1 mA or less
Weight g	1 m:33 3 m:87 5 m:142	1 m:18 3 m:49 5 m:80	1 m:33 3 m:87 5 m:142	1 m:18 3 m:49 5 m:80	1 m:18 3 m:49 5 m:80		1 m:33 3 m:87 5 m:142	1 m:18 3 m:49 5 m:80	1 m:18 3 m:49 5 m:80				1 m:33 3 m:87 5 m:142			1 m:61 3 m:166 5 m:272

*1 : Refer to Ending Page 1 for detailed switch specifications and dimensions.
*2 : Switches other than the above models, such as switches with connectors, are also available. Refer to Ending Page 1.
*3 : The max. load current is 20 mA at 25°C. The current is lower than 20 mA if the operating ambient temperature around the switch is higher than 25˚C. (5 to 10 mA at 60°C)
*4 : Switch for AC magnetic field (T2YD/T2YDT) cannot be used in DC magnetic field.

Cylinder weight table (the weight of the switches is when there are 2 cylinder switches.)

(Unit: g)

Stroke (mm)	5		10		15		20		25		30		40		50	
Bore size (mm)	No switch	Switch	No switch	Switch	No switch	Switch	No switch	Switch	No switch	Switch	No switch	Switch	No switch	Switch	No switch	Switch
ø12	88	191	104	191	122	210	138	227	156	246	163	267	—	—	—	—
ø16	122	237	144	237	164	258	186	281	208	304	230	324	—	—	—	—
ø20	194	305	218	372	249	401	280	430	309	457	340	486	—	—	—	—
ø25	234	416	264	446	296	478	328	510	360	542	391	572	454	636	516	698
ø32	306	535	374	602	441	670	510	738	575	804	644	872	782	1006	919	1139
ø40	466	752	520	806	572	858	626	912	680	966	732	1028	838	1124	944	1230
ø50	757	1145	849	1237	941	1328	1033	1422	1125	1512	1218	1605	1402	1789	1589	1977
ø63	1279	1684	1409	2052	—	—	1669	2312	—	—	1929	2572	2191	2834	2451	3094
ø80	2332	2675	2536	2879	—	—	2942	3808	—	—	3348	4214	3756	4632	4162	5038
ø100	3633	4827	3916	5105	—	—	4480	5629	—	—	5046	6225	5610	6779	6176	7335

SCP*3
CMK2
CMA2
SCM
SCG
SCA2
SCS2
CKV2
CAV2/COVP/N2
SSD2
SSG
SSD
CAT
MDC2
MVC
SMG
MSD/MSDG
FC*
STK
SRL3
SRG3
SRM3
SRT3
MRL2
MRG2
SM-25
ShkAbs
FJ
FK
Spd Contr
Ending

How to order

No switch (without magnet for switch)

SSD-W — 12 ○ - 30 — N - 5 — M - I

With switch (built-in magnet for switch)

SSD-WL - 12 ○ - 30 - T0H - R - N - 5 - T0H - R - M - I

Total stroke S1 — 1st stage stroke S2

Cylinder 1 — Cylinder 2

- A Model No.
- B Bore size
- C Port thread
- D Stroke
- E Switch model No. *2 *3 *8
- F Switch quantity
- G Option 1
- F Switch quantity
- H Option 2
- I Accessory

Code	Description
A Model No.	
SSD-W	Double acting/2-stage
SSD-WL	Double acting/2-stage/with switch
SSD-WL1	ø12, ø16 2-color LED, off-delay, with T1* switch
B Bore size (mm)	
12	ø12
16	ø16
20	ø20
25	ø25
32	ø32
40	ø40
50	ø50
63	ø63
80	ø80
100	ø100
C Port thread	
Blank	Rc thread
NN	NPT thread (ø32 and over) (made-to-order product)
GN	G thread (ø32 and over) (made-to-order product)
D Stroke (mm)	
Refer to the stroke table on the following page.	

E Switch model No.

Axial lead wire	Radial lead wire	Contact	Voltage AC	Voltage DC	Indicator	Lead wire
T0H*	T0V*	Reed	●	●	1-color LED	2-wire
T5H*	T5V*	Reed	●	●	No indicator lamp	2-wire
T8H*	T8V*	Reed	●	●	1-color LED	2-wire
T1H*	T1V*	Proximity	●		1-color LED	2-wire
T2H*	T2V*	Proximity		●	1-color LED	2-wire
T3H*	T3V*	Proximity		●	1-color LED	3-wire
T3PH*	T3PV*	Proximity		●	1-color LED	3-wire
T2WH*	T2WV*	Proximity		●	2-color LED	2-wire
T2YH*	T2YV*	Proximity		●	2-color LED	2-wire
T3WH*	T3WV*	Proximity		●	2-color LED	3-wire
T3YH*	T3YV*	Proximity		●	2-color LED	3-wire
T2JH*	T2JV*	Proximity		●	1-color LED off-delay	2-wire
T2YD*	-	Proximity		●	2-color LED AC magnetic field	2-wire
T2YDT*	-	Proximity		●	2-color LED AC magnetic field	2-wire
T2HR3	T2VR3	Proximity		●	1-color LED (bend resist lead wire specs)	2-wire

* Lead wire length	
Blank	1 m (standard)
3	3 m (option)
5	5 m (option)

F Switch quantity	
R	1 on rod side
H	1 on head side
D	2

G Option 1	
Blank	Rod end female thread
N	Rod end male thread

H Option 2 *4	
M	Piston rod material (stainless steel)

I Accessory (available when rod end male thread "N" is selected)	
I	Rod eye
I2	Rod eye (compact)
Y	Rod clevis (pin and snap ring included)
Y2	Rod clevis (compact) (pin and snap ring included)

Precautions for model No. selection

*1 : As two cylinders are fastened at four positions from cylinder 2 (head side), they cannot be mounted at the head side. For mounting at the head side, made to order is available. Contact CKD separately.

*2 : Switches other than E Switch model No. are also available. (Made to order)
Refer to Ending Page 1 for details.

3 : An AC magnetic field proof switch cannot be installed on ø12 and ø16. In addition, T8 switch cannot be installed on ø12 to ø32.

*4 : Piston rod of ø12 to ø25 is stainless steel as standard. C-snap ring is stainless steel instead of steel. The rod end male thread nut is stainless steel.

*5 : Copper and PTFE free as standard for SSD-W12 to 50.

*6 : Refer to Ending Page 85 for custom specifications of rod end form.

*7 : Refer to pages 1086 and 1087 for combinations of variations/options.

*8 : Switches are shipped with the product. Contact CKD if assembling before shipment is necessary.

[Example of model No.]

SSD-WL-12-30-T0H-R-N-5-T0H-R-I

Model: Compact cylinder, 2-stage

B Bore size	: ø12 mm	
C Port thread	: Rc thread	
D Total stroke S1	: 30 mm	Cylinder 1
E Switch model No.	: Reed switch T0H, lead wire 1 m	Cylinder 1
F Switch quantity	: 1 included (on rod side)	Cylinder 1
G Option 1	: Rod end male thread	
D 1st stage stroke S2	: 5 mm	Cylinder 2
2nd stage stroke	: 25 mm	Cylinder 2
E Switch model No.	: Reed switch T0H, lead wire 1 m	Cylinder 2
F Switch quantity	: 1 on rod side	Cylinder 2
I Accessory	: Rod eye	

1st stage stroke	5 mm	(S2)
+ 2nd stage stroke	25 mm	
Total stroke	30 mm	(S1)

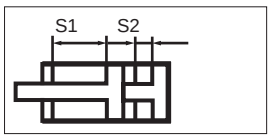

How to order switch

SW - **T0H**

Switch model No.
(Item Ⓔ on page 1212)

[Stroke table]

Stroke (mm)		Applicable bore size									
		ø12	ø16	ø20	ø25	ø32	ø40	ø50	ø63	ø80	ø100
Standard stroke	5	●	●	●	●	●	●	●	●	●	●
	10	●	●	●	●	●	●	●	●	●	●
	15	●	●	●	●	●	●	●			
	20	●	●	●	●	●	●	●	●	●	●
	25	●	●	●	●	●	●	●			
	30	●	●	●	●	●	●	●	●	●	●
	40				●	●	●	●	●	●	●
	50				●	●	●	●	●	●	●
Min. stroke (mm) *1		1									
Max. stroke (mm)		30			50						
Custom stroke *2		In 1 mm increments									

1 : Less than 5 mm with 1-color LED switch and less than 10 mm with the 2-color LED, off-delay, AC magnetic field proof, T1 or T8* switch are not available.
Refer to page 1210 for the number of installed switches and the min. stroke.
*2 : The total length is the same as that of the next longer standard stroke.

Internal structure and parts list

● SSD-WL-12 to 25 (double acting/2-stage/with switch)

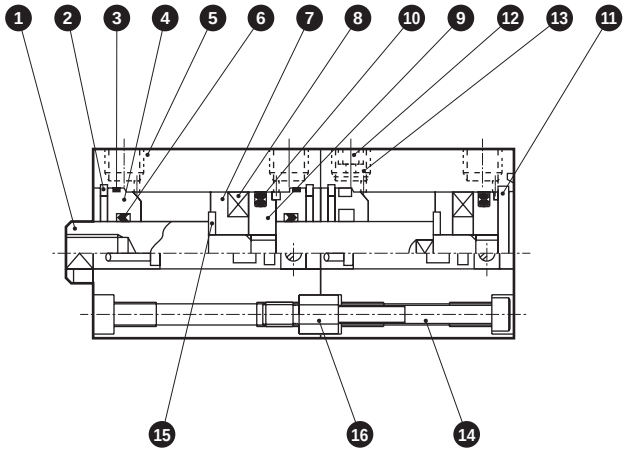

● SSD-WL-32 to 50 (double acting/2-stage/with switch)

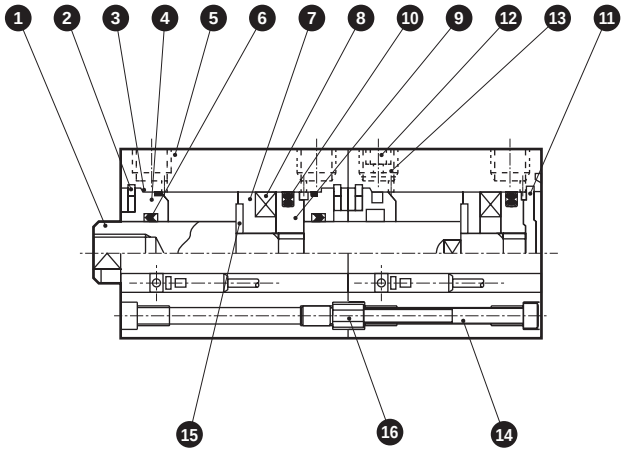

● SSD-W-12 to 25 (double acting/2-stage)

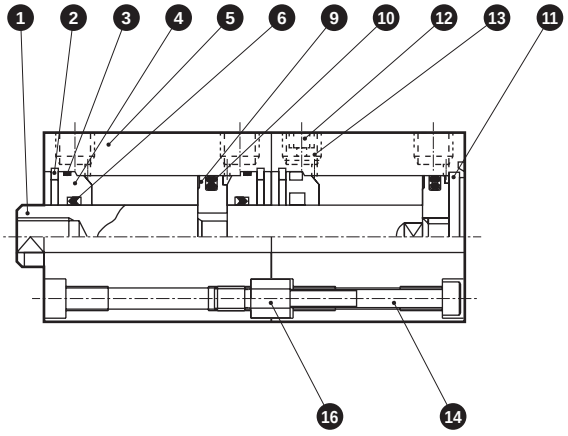

● SSD-W-32 to 50 (double acting/2-stage)

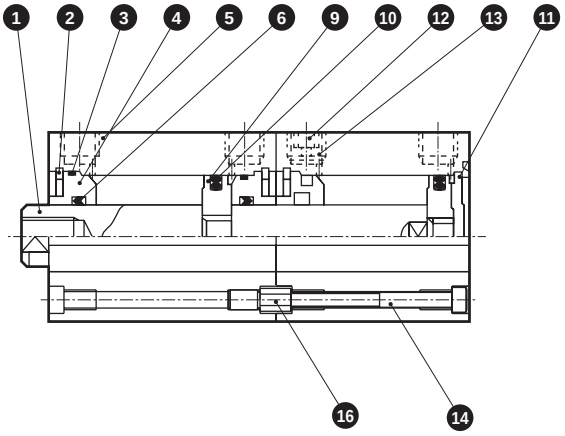

No.	Part name	Material	Remarks
1	Piston rod	ø12 to ø25: Stainless steel, ø32 to ø50: Steel	ø16 to ø50: Industrial chrome plating
2	C-snap ring	Steel	Zinc phosphate
3	Rod metal	Special aluminum	Alumite
4	Rod metal gasket	Nitrile rubber	
5	Body	Aluminum alloy	Hard alumite
6	Rod packing	Nitrile rubber	
7	Spacer	ø12: Aluminum alloy ø16 to ø50: Special resin	ø12: Chromate
8	Magnet	Plastic	

No.	Part name	Material	Remarks
9	Piston	Aluminum alloy	Chromate
10	Piston packing	Nitrile rubber	
11	Cover	ø12 to ø25: Stainless steel ø32 to ø50: Aluminum alloy	ø32 to ø50: Alumite
12	Plug	Stainless steel	
13	Stainless steel wire mesh	Stainless steel	
14	Hex socket screw	Steel	Black finish
15	Spacer washer	Stainless steel	ø12 to ø50
16	Connector	Steel	

Repair parts list

Bore size (mm)	Kit No.	Repair parts No.
ø12	SSD-W-12K	4 6 10
ø16	SSD-W-16K	
ø20	SSD-W-20K	
ø25	SSD-W-25K	
ø32	SSD-W-32K	
ø40	SSD-W-40K	
ø50	SSD-W-50K	

SSD-W application examples

Pressure setting: P2 > P1

● 1st stage push
Keeping port 4 pressurized, pressurize port 1.

● 2nd stage push
Keeping port 1 pressurized, pressurize port 3.

It may not be P2 = P1 depending on the load direction. When using a single acting cylinder with free fall load, ports 2 and 4 in the upper figure and ports 2 and 3 in the lower figure are breathing holes.
Port 2, which basically needs no piping as a rule, is plugged with a filter.

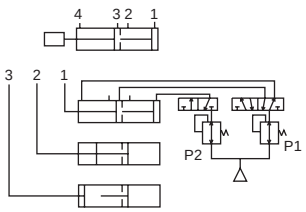

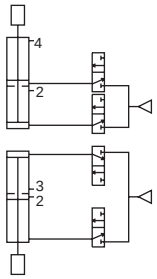

Internal structure and parts list

● SSD-WL-63 to 100 (double acting/2-stage/with switch)

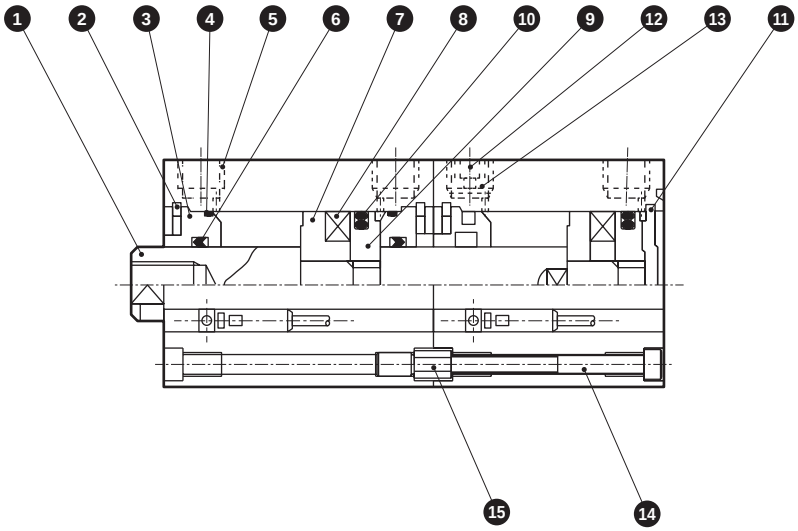

● SSD-W-63 to 100 (double acting/2-stage)

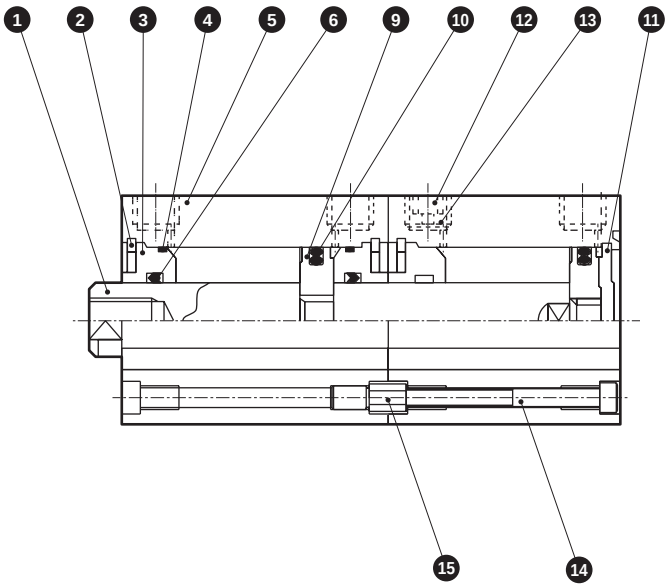

No.	Part name	Material	Remarks	No.	Part name	Material	Remarks
1	Piston rod	Steel	Industrial chrome plating	8	Magnet	Plastic	
2	C-snap ring	Steel	Zinc phosphate	9	Piston	Aluminum alloy	Chromate
3	Rod metal	Aluminum alloy	Alumite	10	Piston packing	Nitrile rubber	
4	Rod metal Gasket	Nitrile rubber		11	Cover	Aluminum alloy	Alumite
				12	Plug	Stainless steel	
5	Body	Aluminum alloy	Hard alumite	13	Stainless steel wire mesh	Stainless steel	
6	Rod packing	Nitrile rubber		14	Hex socket screw	Steel	Black finish
7	Spacer	Aluminum alloy	Chromate	15	Connector	Steel	

Repair parts list

Bore size (mm)	Kit No.	Repair parts No.
ø63	SSD-W-63K	4 6 10
ø80	SSD-W-80K	
ø100	SSD-W-100K	

SCP*3
CMK2
CMA2
SCM
SCG
SCA2
SCS2
CKV2
CAV2/COVP/N2
SSD2
SSG
SSD
CAT
MDC2
MVC
SMG
MSD/MSDG
FC*
STK
SRL3
SRG3
SRM3
SRT3
MRL2
MRG2
SM-25
ShkAbs
FJ
FK
Spd Contr
Ending

Dimensions

● SSD-WL-12/16 (with switch)

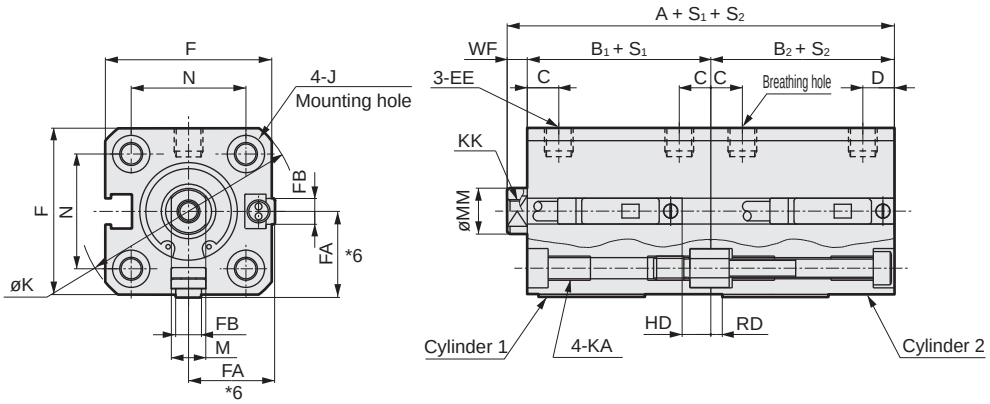

● Rod end male thread

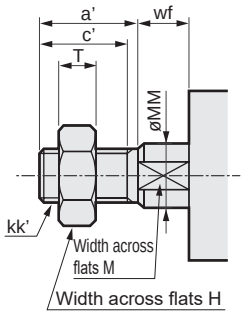

● SSD-W-12/16 (without switch)

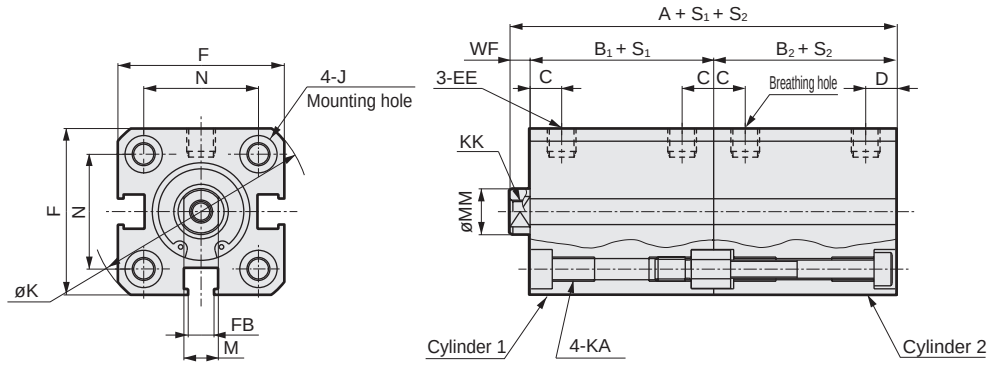

Code	No switch			Common dimensions with switch																
Bore size (mm)	A *1	B_1 *1	B_2 *1	A *1	B_1 *1	B_2 *1	C	D	EE	F	FA *6	FB	J	K	KA	KK	M	MM	N	WF
ø12	42.5	22	17	52.5	27	22	5.5	5.5	M5	25	13(16.5)	4.5	6.5 spot face depth 3.5	32	M4 depth 7	M3 depth 6	5	6	15.5	3.5
ø16	42.5	22	17	52.5	27	22	5.5	5.5	M5	29	15(18.5)	4.5	6.5 spot face depth 3.5	38	M4 depth 7	M4 depth 8	6	8	20	3.5

Switch dimensions	Reed T0H/T0V, T5H/T5V			Proximity T2H/T2V, T3H/T3V T2WH/T2WV, T3WH/T3WV		
Bore size (mm)	HD_1 *2	HD_2 *2	RD *2	HD_1 *2	HD_2 *2	RD *2
ø12	5	0	2.5	5	0	2.5
ø16	5	0	2	5	0	2

● *1 : To calculate A + S_1 + S_2 or B_1 + S_1, B_2 + S_2 when using custom stroke, apply the next longer standard stroke (instead of the custom stroke) to the stroke value.
(Example) If the custom stroke is 7 mm, apply the standard stroke of 10 mm.

● *2 : HD and RD dimensions for 5 mm stroke differ from these dimensions according to the setting.

● *3 : When the stroke S_2 is 5 mm for ø12 or ø16 with switch, (B_2+S_2) and (A+S_1+S_2) are as shown in the table below.

Bore size	A + S_1 + S_2	B_1 + S_1	B_2 + S_2
ø12	62.5 + S_1	27 + S_1	32
ø16	62.5 + S_1	27 + S_1	32

S_1/S_2 with the custom stroke are the same as those of the next longer standard stroke.

● *4 : Refer to page 1316 for HD and RD dimensions for the 2-color LED, off-delay, AC magnetic field proof, T1* and T8* switches.

● *5 : Refer to page 1316 for the protruding dimensions of the 2-color LED, off-delay, AC magnetic field proof, T1* and T8* switches.

● *6 : Dimensions in ( ) of FA are for the L-shaped lead wire.

● *7 : For dimensions of individual accessories, refer to pages 1108 to 1115.

Dimensions of rod end male thread

Code / Bore size (mm)	a'	c'	H	kk'	M	MM	T	wf
ø 12	10.5	9	8	M5	5	6	3.2	3.5
ø 16	12	10	10	M6	6	8	3.6	3.5

dimensions

● SSD-WL-20/25 (with switch)

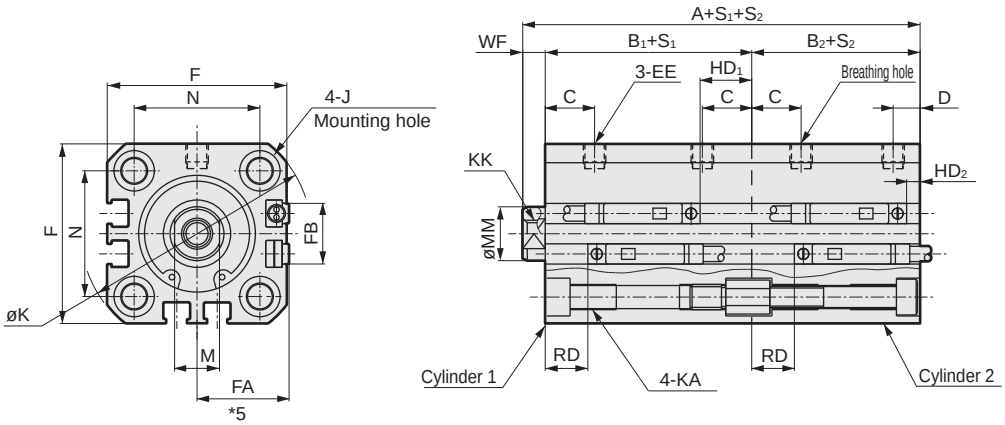

● Rod end male thread

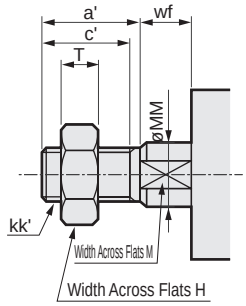

● SSD-W-20/25 (without switch)

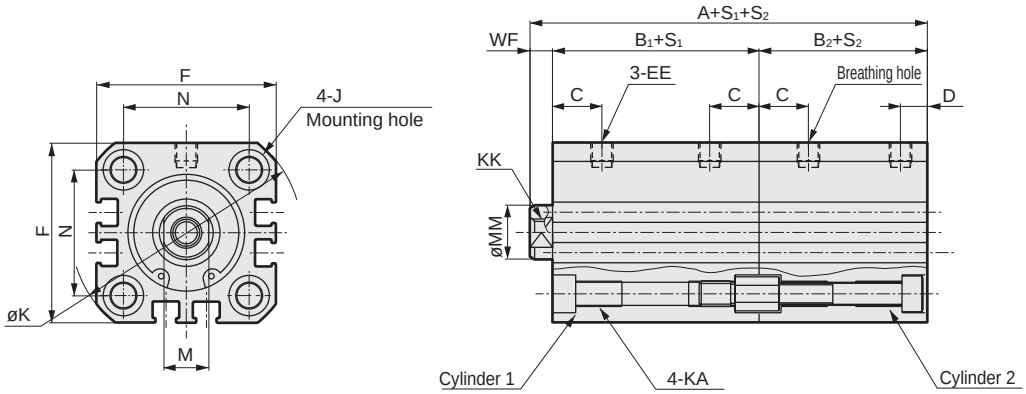

Code	No switch			Common dimensions with switch																
Bore size (mm)	A *1	B_1 *1	B_2 *1	A *1	B_1 *1	B_2 *1	C	D	EE	F	FA*5	FB	J	K	KA	KK	M	MM	N	WF
ø20	50	26	19.5	70	36	29.5	8	5.5	M5	36	18.5 (22)	12.5	9 spot face depth 5.5	47	M6 depth 11	M5 depth 7	8	10	25.5	4.5
ø25	58.5	31	22.5	78.5	41	32.5	11	6	M5	40	20.5 (24)	13.5	9 spot face depth 5.5	51	M6 depth 11	M6 depth 12	10	12	28	5

Switch dimensions	Reed T0H/T0V, T5H/T5V			Proximity T2H/T2V, T3H/T3V T2WH/T2WV,T3WH/T3WV		
Bore size (mm)	HD_1*2	HD_2*2	RD*2	HD_1*2	HD_2*2	RD*2
ø20	9.5	3	6.5	9.5	3	6.5
ø25	11.5	3	9.5	11.5	3	9.5

● *1: To calculate A + S_1 + S_2 or B_1 + S_1, B_2 + S_2 when using custom stroke, apply the next longer standard stroke (instead of the custom stroke) to the stroke value.
(Example) If the custom stroke is 7 mm, apply the standard stroke of 10 mm.

● *2: HD and RD dimensions for 5 mm stroke differ from these dimensions according to the setting.

● *3: Refer to page 1316 for HD and RD dimensions for the 2-color LED, off-delay, AC magnetic field proof, T1* and T8* switches.

● *4: Refer to page 1316 for the protruding dimensions of the 2-color LED, off-delay, AC magnetic field proof, T1* and T8* switches.

● *5: Dimensions in ( ) of FA are for the L-shaped lead wire.

● *6: For dimensions of individual accessories, refer to pages 1108 to 1115.

Dimensions of rod end male thread

Code / Bore size (mm)	a'	c'	H	kk'	M	MM	T	wf
ø 20	14	12	13	M8	8	10	5	4.5
ø25	17.5	15	17	M 10 x 1.25	10	12	6	5

SCP*3
CMK2
CMA2
SCM
SCG
SCA2
SCS2
CKV2
CAV2/COVP/N2
SSD2
SSG
SSD
CAT
MDC2
MVC
SMG
MSD/MSDG
FC*
STK
SRL3
SRG3
SRM3
SRT3
MRL2
MRG2
SM-25
ShkAbs
FJ
FK
Spd Contr
Ending

Dimensions

● SSD-WL-32 to 100 (with switch)

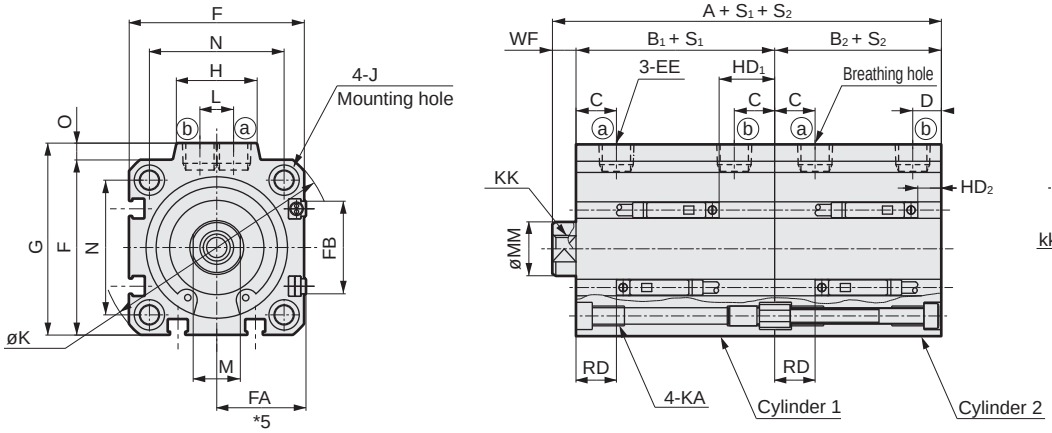

● Rod end male thread

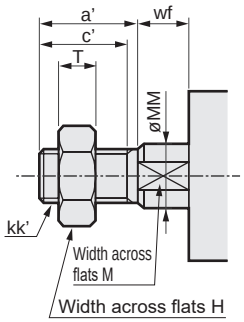

● SSD-W-32 to 100 (without switch)

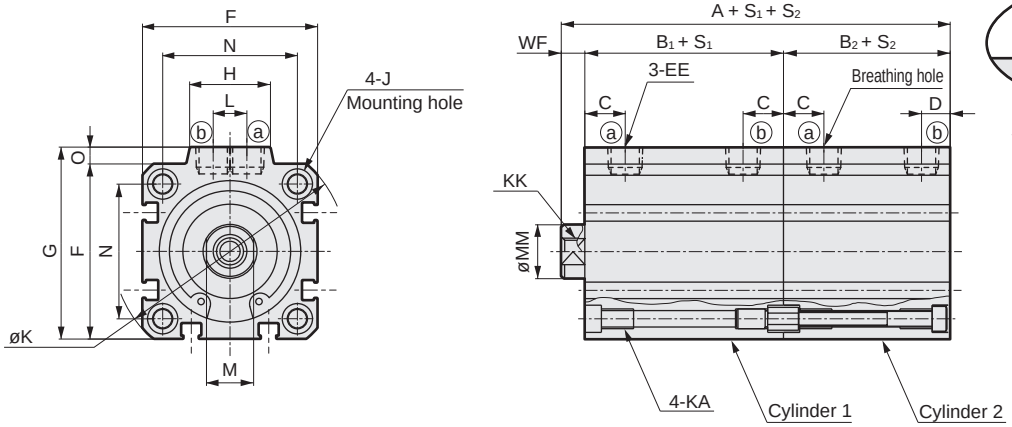

[Bore size ø100]

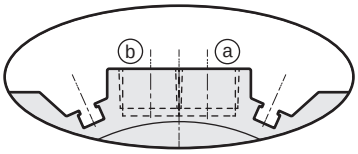

* Only for ø100, the port surface has switch grooves.

Code / Bore size (mm)	No switch A *1	No switch B1 *1	No switch B2 *1	Common dimensions with switch A *1	B1 *1	B2 *1	C	D	EE	F	FA *5	FB	G	H	J	K	KA	KK	L	M	MM	N	O	WF
ø32	60.5	30.5	23	80.5	40.5	33	8	8	Rc1/8	45	23(26.5)	20.5	49.5	24	9 spot face depth 5.5	60	M6 depth 11	M8 depth 13	10	14	16	34	4.5	7
ø40	75.5	39	29.5	95.5	49	39.5	12	8.5	Rc1/8	52	26.5(30)	27.5	57	24	9 spot face depth 5.5	69	M6 depth 11	M8 depth 13	10	14	16	40	5	7
ø50	77.5	39	30.5	97.5	49	40.5	10.5	10.5	Rc1/4	64	32.5(36)	28.5	71	33	11 spot face depth 6.5	86	M8 depth 13	M10 depth 15	15	17	20	50	7	8
ø63	85	41	36	105	51	46	13	11	Rc1/4	77	39(42.5)	28.5	84	33	14 spot face depth 9	103	M10 depth 25	M10 depth 15	15	17	20	60	7	8
ø80	102	48.5	43.5	122	58.5	53.5	16	13	Rc3/8	98	49.5(53)	28.5	104	38	17.5 spot face depth 11	132	M12 depth 28	M16 depth 21	15	22	25	77	6	10
ø100	123	58	53	143	68	63	23	15	Rc3/8	117	59(62.5)	28.5	123.5	38	17.5 spot face depth 11	156	M12 depth 28	M20 depth 27	15	27	30	94	6.5	12

Switch dimensions / Bore size (mm)	Reed T0H/T0V, T5H/T5V HD1 *2	HD2 *2	RD *2	Proximity T2H/T2V, T3H/T3V T2WH/T2WV, T3WH/T3WV HD1 *2	HD2 *2	RD *2
ø32	11	3.5	9	11	3.5	9
ø40	16.5	7	12	16.5	7	12
ø50	16.5	7.5	12.5	16.5	7.5	12.5
ø63	18	12.5	13	18	12.5	13
ø80	23	17.5	15.5	23	17.5	15.5
ø100	28.5	23	19.5	28.5	23	19.5

- *1 : To calculate A + S_1 + S_2 or B_1 + S_1 + B_2 + S_2 when using custom stroke, apply the next longer standard stroke (instead of the custom stroke) to the stroke value. (Example) If the custom stroke is 7 mm, apply the standard stroke of 10 mm.
- *2 : HD and RD dimensions for 5 mm stroke differ from these dimensions according to the setting.
- *3 : Refer to page 1317 for HD and RD dimensions of the 2-color LED, off-delay, AC magnetic field proof, T1* and T8* switches.
- *4 : Refer to page 1317 for the protruding dimensions of the 2-color LED, off-delay, AC magnetic field proof, T1* and T8* switches.
- *5 : Dimensions in ( ) of FA are for the L-shaped lead wire.

Dimensions of rod end male thread

Code / Bore size (mm)	a'	c'	H	kk'	M	MM	T	wf
ø 32	23.5	20.5	22	M14x1.5	14	16	8	5
ø 40	23.5	20.5	22	M14x1.5	14	16	8	5
ø 50	28.5	26	27	M18x1.5	17	20	11	5
ø 63	28.5	26	27	M18x1.5	17	20	11	5
ø 80	35.5	32.5	32	M22x1.5	22	25	13	8
ø100	35.5	32.5	41	M26x1.5	27	30	16	8

* For dimensions of individual accessories, refer to pages 1108 to 1115.

MEMO

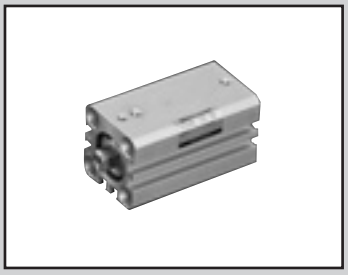

Compact cylinder double acting/rotation-stop

SSD-M Series

● Bore size: ø12/ø16/ø20/ø25/ø32/ø40/ø50/ø63

JIS symbol

RoHS CAD

Specifications

1 MPa ≈ 145.0 psi, 1 MPa = 10 bar

Item	SSD-M SSD-ML (with switch)							
Bore size mm	ø12	ø16	ø20	ø25	ø32	ø40	ø50	ø63
Actuation	Double acting							
Working fluid	Compressed air							
Max. working pressure MPa	1.0 (≈150 psi, 10 bar)							
Min. working pressure MPa	0.1 (≈15 psi, 1 bar)							0.05
Proof pressure MPa	1.6 (≈230 psi, 16 bar)							
Ambient temperature °C	-10 (14°F) to 60 (140°F) (no freezing)							
Port size	M5				Rc1/8		Rc1/4	
Stroke tolerance mm	+1.0 0							
Working piston speed mm/s	50 to 500							50 to 300
Cushion	None							
Lubrication	Not required (use turbine oil ISO VG32 if necessary for lubrication)							
Non-rotating accuracy	±2°	±1.5°			±1°			
Allowable absorbed energy J	0.004	0.01	0.016	0.021	0.025	0.092	0.1	0.12

Stroke

Bore size (mm)	Standard stroke (mm)	Max. stroke (mm)	Min. stroke (mm)
ø12	5, 10, 15, 20, 25, 30	30	1
ø16			
ø20			
ø25	5, 10, 15, 20, 25, 30, 40, 50	50	
ø32			
ø40			
ø50			
ø63	5, 10, 20, 30, 40, 50	50	

*1) The custom stroke is available in 1 mm increments. However, the total length is the same as that of the next longer standard stroke.
2) When using the type with a switch, refer to the table below. Less than 10 mm with the 2-color LED, off-delay, AC magnetic field proof, T1 or T8* switch is not available.

Number of installed switches and min. stroke (mm)

Switch quantity	1	2	3	4	5
Switch model No. / Bore size (mm)	T*	T*	T*	T*	T*
ø12	5	5	25	-	-
ø16	5	5	25	-	-
ø20	5	5	-	-	-
ø25	5	5	35	50	-
ø32	5	5	35	50	-
ø40	5	5	35	50	-
ø50	5	5	35	50	-
ø63	5	5	35	50	-

Note: Less than 10 mm with the 2-color LED, off-delay, AC magnetic field proof, T1* or T8* switch is not available.

Switch specifications

● 1-color/2-color LED/for AC magnetic field proof

Item	2-wire proximity				3-wire proximity				2-wire reed							2-wire proximity
	T1H/ T1V	T2H/T2V/ T2JH/T2JV	T2YH/ T2YV	T2WH/ T2WV	T3H/ T3V	T3PH/ T3PV	T3YH/ T3YV	T3WH/ T3WV	T0H/T0V		T5H/T5V		T8H/T8V			T2YD (*4) T2YDT
Applications	For programmable controller, relay, compact solenoid valve	Dedicated for programmable controller			For programmable controller, relay				For programmable controller, relay		For programmable controller, relay (no lamp), serial		For programmable controller, relay			Dedicated for programmable controller
Output method	-				NPN output	PNP output	NPN output	NPN output	-							
Pwr. supp. V.	-				10 to 28 VDC				-							
Load voltage	85 to 265 VAC	10 to 30 VDC		24 VDC ±10%	30 VDC or less				12/24 VDC	100/110 VAC	5/12/24 VDC	100/110 VAC	12/24 VDC	110 VAC	220 VAC	24 VDC ±10%
Load current	5 to 100 mA	5 to 20 mA (*3)			100 mA or less		50 mA or less		5 to 50 mA	7 to 20 mA	50 mA or less	20 mA or less	5 to 50 mA	7 to 20 mA	7 to 10 mA	5 to 20 mA
Indicator	LED (Lit when ON)	LED (Lit when ON)	Red/green LED (Lit when ON)	Red/green LED (Lit when ON)	LED (Lit when ON)	Yellow LED (Lit when ON)	Red/green LED (Lit when ON)	Red/green LED (Lit when ON)	LED (Lit when ON)		No indicator lamp		LED (Lit when ON)			Red/green LED (Lit when ON)
Leakage current	≤ 1 mA at 100 VAC, ≤ 2 mA at 200 VAC	1 mA or less			10 μA or less				0 mA							1 mA or less
Weight g	1 m:33 3 m:87 5 m:142	1 m:18 3 m:49 5 m:80	1 m:33 3 m:87 5 m:142	1 m:18 3 m:49 5 m:80	1 m:18 3 m:49 5 m:80		1 m:33 3 m:87 5 m:142	1 m:18 3 m:49 5 m:80	1 m:18 3 m:49 5 m:80				1 m:33 3 m:87 5 m:142			1 m:61 3 m:166 5 m:272

*1 : Refer to Ending Page 1 for detailed switch specifications and dimensions.
*2 : Switches other than the above models, such as switches with connectors, are also available. Refer to Ending Page 1.
*3 : The max. load current is 20 mA at 25°C. The current is lower than 20 mA if the operating ambient temperature around the switch is higher than 25°C. (5 to 10 mA at 60°C)
*4 : Switch for AC magnetic field (T2YD/T2YDT) cannot be used in DC magnetic field.

Cylinder weight table (the weight of the switches is when there are 2 cylinder switches.)

(Unit: g)

Stroke (mm)	5		10		15		20		25		30		40		50	
Bore size (mm)	No switch	Switch	No switch	Switch	No switch	Switch	No switch	Switch	No switch	Switch	No switch	Switch	No switch	Switch	No switch	Switch
ø12	44	94	52	94	61	103	69	111	78	120	80	122	-	-	-	-
ø16	58	114	69	114	79	124	90	135	101	146	112	157	-	-	-	-
ø20	76	131	88	163	101	176	114	189	126	201	139	214	-	-	-	-
ø25	102	193	117	208	133	224	149	240	165	256	180	271	212	303	243	334
ø32	166	280	188	302	210	324	232	346	253	367	275	389	319	433	362	476
ø40	210	353	237	380	263	406	290	433	317	460	343	486	396	539	449	592
ø50	341	535	383	577	425	619	467	661	509	703	552	746	636	830	720	914
ø63	507	786	562	841	-	-	672	951	-	-	782	1061	893	1172	1003	1282

Theoretical thrust table

(Unit: N)

Bore size (mm)	Operating direction	Working pressure MPa										
		0.1	0.15	0.2	0.3	0.4	0.5	0.6	0.7	0.8	0.9	1.0
ø12	Push	11.3	17.0	22.6	33.9	45.2	56.5	67.9	79.2	90.5	$1.02x10^2$	$1.13x10^2$
	Pull	8.48	12.7	17.0	25.4	33.9	42.4	50.9	59.4	67.9	76.3	84.8
ø16	Push	20.1	30.2	40.2	60.3	80.4	$1.01x10^2$	$1.21x10^2$	$1.41x10^2$	$1.61x10^2$	$1.81x10^2$	$2.01x10^2$
	Pull	15.1	22.6	30.2	45.2	60.3	75.4	90.5	$1.06x10^2$	$1.21x10^2$	$1.36x10^2$	$1.51x10^2$
ø20	Push	31.4	47.1	62.8	94.2	$1.26x10^2$	$1.57x10^2$	$1.88x10^2$	$2.20x10^2$	$2.51x10^2$	$2.83x10^2$	$3.14x10^2$
	Pull	23.6	35.3	47.1	70.7	94.2	$1.18x10^2$	$1.41x10^2$	$1.65x10^2$	$1.88x10^2$	$2.12x10^2$	$2.36x10^2$
ø25	Push	49.1	73.6	98.2	$1.47x10^2$	$1.96x10^2$	$2.45x10^2$	$2.95x10^2$	$3.44x10^2$	$3.93x10^2$	$4.42x10^2$	$4.91x10^2$
	Pull	37.8	56.7	75.6	$1.13x10^2$	$1.51x10^2$	$1.89x10^2$	$2.27x10^2$	$2.64x10^2$	$3.02x10^2$	$3.40x10^2$	$3.78x10^2$
ø32	Push	80.4	$1.21x10^2$	$1.61x10^2$	$2.41x10^2$	$3.22x10^2$	$4.02x10^2$	$4.83x10^2$	$5.63x10^2$	$6.43x10^2$	$7.24x10^2$	$8.04x10^2$
	Pull	60.3	90.5	$1.21x10^2$	$1.81x10^2$	$2.41x10^2$	$3.02x10^2$	$3.62x10^2$	$4.22x10^2$	$4.83x10^2$	$5.43x10^2$	$6.03x10^2$
ø40	Push	$1.26x10^2$	$1.88x10^2$	$2.51x10^2$	$3.77x10^2$	$5.03x10^2$	$6.28x10^2$	$7.54x10^2$	$8.80x10^2$	$1.01x10^3$	$1.13x10^3$	$1.26x10^3$
	Pull	$1.06x10^2$	$1.58x10^2$	$2.11x10^2$	$3.17x10^2$	$4.22x10^2$	$5.28x10^2$	$6.33x10^2$	$7.39x10^2$	$8.44x10^2$	$9.50x10^2$	$1.06x10^3$
ø50	Push	$1.96x10^2$	$2.95x10^2$	$3.93x10^2$	$5.89x10^2$	$7.85x10^2$	$9.82x10^2$	$1.18x10^3$	$1.37x10^3$	$1.57x10^3$	$1.77x10^3$	$1.96x10^3$
	Pull	$1.65x10^2$	$2.47x10^2$	$3.30x10^2$	$4.95x10^2$	$6.60x10^2$	$8.25x10^2$	$9.90x10^2$	$1.15x10^3$	$1.32x10^3$	$1.48x10^3$	$1.65x10^3$
ø63	Push	$3.12x10^2$	$4.68x10^2$	$6.23x10^2$	$9.35x10^2$	$1.25x10^3$	$1.56x10^3$	$1.87x10^3$	$2.18x10^3$	$2.49x10^3$	$2.81x10^3$	$3.12x10^3$
	Pull	$2.80x10^2$	$4.20x10^2$	$5.61x10^2$	$8.41x10^2$	$1.12x10^3$	$1.40x10^3$	$1.68x10^3$	$1.96x10^3$	$2.24x10^3$	$2.52x10^3$	$2.80x10^3$

How to order

No switch (without magnet for switch)

SSD-M — 12 ○ - 5 ———— N - LB - I

With switch (built-in magnet for switch)

SSD-ML - 12 ○ - 5 - T0H - R - N - LB - I

2-color LED/off-delay, with T1* switch (ø12/ø16 only)

SSD-ML1 - 12 ○ - 10 - T2YH - R - N - LB - I

Ⓐ Model No.
Ⓑ Bore size
Ⓒ Port thread
Ⓓ Stroke
Ⓔ Switch model No. *1 *2 *10
Ⓕ Switch quantity
Ⓖ Option *3
Ⓗ Mounting bracket *5 *6
Ⓘ Accessory *7

Code	Description
Ⓐ Model No.	
SSD-M	Double acting/rotation-stop
SSD-ML	Double acting/rotation-stop/with switch
SSD-ML1	ø12, ø16 2-color LED, off-delay, with T1* switch
Ⓑ Bore size (mm)	
12	ø12
16	ø16
20	ø20
25	ø25
32	ø32
40	ø40
50	ø50
63	ø63
Ⓒ Port thread	
Blank	Rc thread
NN	NPT thread (ø32 and over) (made-to-order product)
GN	G thread (ø32 and over) (made-to-order product)
Ⓓ Stroke (mm)	
Refer to the stroke table on the following page.	

Ⓔ Switch model No.

Axial lead wire	Radial lead wire	Contact	Voltage AC	Voltage DC	Indicator	Lead wire
TOH*	**T0V***	Reed	●	●	1-color LED	2-wire
T5H*	**T5V***	Reed	●	●	No indicator lamp	2-wire
T8H*	**T8V***	Reed	●	●	1-color LED	2-wire
T1H*	**T1V***	Proximity	●		1-color LED	2-wire
T2H*	**T2V***	Proximity		●	1-color LED	2-wire
T3H*	**T3V***	Proximity		●	1-color LED	3-wire
T3PH*	**T3PV***	Proximity		●	1-color LED	3-wire
T2WH*	**T2WV***	Proximity		●	2-color LED	2-wire
T2YH*	**T2YV***	Proximity		●	2-color LED	2-wire
T3WH*	**T3WY***	Proximity		●	2-color LED	3-wire
T3YH*	**T3YV***	Proximity		●	2-color LED	3-wire
T2JH*	**T2JV***	Proximity		●	1-color LED off-delay	2-wire
T2YD*	**-**	Proximity		●	2-color LED AC magnetic field	2-wire
T2YDT*	**-**	Proximity		●	2-color LED AC magnetic field	2-wire
T2HR3	**T2VR3**	Proximity		●	1-color LED (bend resist lead wire specs)	2-wire

*** Lead wire length**	
Blank	1 m (standard)
3	3 m (option)
5	5 m (option)
Ⓕ Switch quantity	
R	1 on rod side
H	1 on head side
D	2
Ⓖ Option	
Blank	Rod end female thread
N	Rod end male thread
M	Piston rod material (stainless steel) (made to order (ø32 to ø63))
Ⓗ Mounting bracket	
LB	Axial foot
LB2	Axial foot (compact)
CB	Clevis bracket (pin and snap ring included)
CB2	Clevis bracket (compact) (pin and snap ring included)
FA	Rod side flange
FB	Head side flange
Ⓘ Accessory (available when rod end male thread "N" is selected)	
I	Rod eye
I2	Rod eye (compact)
Y	Rod clevis (pin and snap ring included)
Y2	Rod clevis (compact) (pin and snap ring included)

⚠ Precautions for model No. selection

*1 : Switches other than Ⓔ Switch model No. are also available. (Made to order) Refer to Ending Page 1 for details.
2 : An AC magnetic field proof switch cannot be installed on ø12 and ø16. In addition, T8 switch cannot be installed on ø12 to ø32.
*3 : Piston rod of ø12 to ø25 is stainless steel as standard. C-snap ring is stainless steel instead of steel. The rod end male thread nut is stainless steel.
*4 : Copper and PTFE free as standard for SSD-M-12 to 25.
*5 : The mounting bracket is included at shipment.
*6 : The projection dimension of piston rod WF when LB2 or FA is selected is different from that of the standard. Refer to the dimensions on pages 1109 and 1110. The number of the specified protruding dimension will be added at the end of the model No. printed on the metal plate on the body.
*7 : "I" and "Y" cannot be selected together.
*8 : Refer to Ending Page 85 for custom specifications of rod end form.
*9 : Refer to pages 1086 and 1087 for combinations of variations/options.
*10 : Switches are shipped with the product. Contact CKD if assembling before shipment is necessary.

[Example of model No.]

SSD-ML-12-5-T0H-R-N

Model: Compact cylinder rotation-stop

Ⓑ Bore size : ø12 mm
Ⓒ Port thread : Rc thread
Ⓓ Stroke : 5 mm
Ⓔ Switch model No. : Reed T0H switch
Ⓕ Switch quantity : 1 on rod side
Ⓖ Option : Rod end male thread

How to order switch

SW - **T0H**

Switch model No.
(Item Ⓔ on page 1222)

(Stroke table)

Stroke (mm)		Applicable bore size							
		ø12	ø16	ø20	ø25	ø32	ø40	ø50	ø63
Standard stroke	5	●	●	●	●	●	●	●	●
	10	●	●	●	●	●	●	●	●
	15	●	●	●	●	●	●	●	
	20	●	●	●	●	●	●	●	●
	25	●	●	●	●	●	●	●	
	30	●	●	●	●	●	●	●	●
	40				●	●	●	●	●
	50				●	●	●	●	●
Min. stroke (mm) *1		1							
Max. stroke (mm)		30			50				
Custom stroke *2		In 1 mm increments							

1 : Less than 5 mm for 1-color LED switch and less than 10 mm for the 2-color LED, off-delay, AC magnetic field proof, T1 or T8* switch are not available.
Refer to page 1220 for the number of installed switches and the min. stroke.
*2 : The total length is the same as that of the next longer standard stroke.

How to order mounting bracket

Bore size (mm) / Mounting bracket	ø12	ø16	ø20	ø25	ø32	ø40	ø50	ø63
Foot (LB)	SSD-LB-12	SSD-LB-16	SSD-LB-20	SSD-LB-25	SSD-LB-32	SSD-LB-40	SSD-LB-50	SSD-LB-63
Foot (LB2)	SSD-LB2-12	SSD-LB2-16	SSD-LB2-20	SSD-LB2-25	SSD-LB2-32	SSD-LB2-40	SSD-LB2-50	SSD-LB2-63
Flange (FA/FB)	SSD-FA-12	SSD-FA-16	SSD-FA-20	SSD-FA-25	SSD-FA-32	SSD-FA-40	SSD-FA-50	SSD-FA-63
Clevis bracket (CB)	SSD-CB-12	SSD-CB-16	SSD-CB-20	SSD-CB-25	SSD-CB-32	SSD-CB-40	SSD-CB-50	SSD-CB-63
Clevis bracket (CB2)	SSD-CB2-12	SSD-CB2-16	SSD-CB2-20	SSD-CB2-25	SSD-CB2-32	SSD-CB2-40	SSD-CB2-50	SSD-CB2-63

*1: The foot mounting bracket is provided as 2 pcs./set.

SCP*3
CMK2
CMA2
SCM
SCG
SCA2
SCS2
CKV2
CAV2/COVP/N2
SSD2
SSG
SSD
CAT
MDC2
MVC
SMG
MSD/MSDG
FC*
STK
SRL3
SRG3
SRM3
SRT3
MRL2
MRG2
SM-25
ShkAbs
FJ
FK
Spd Contr
Ending

Internal structure and parts list

● SSD-ML-12 to 25 (double acting/rotation-stop/with switch)

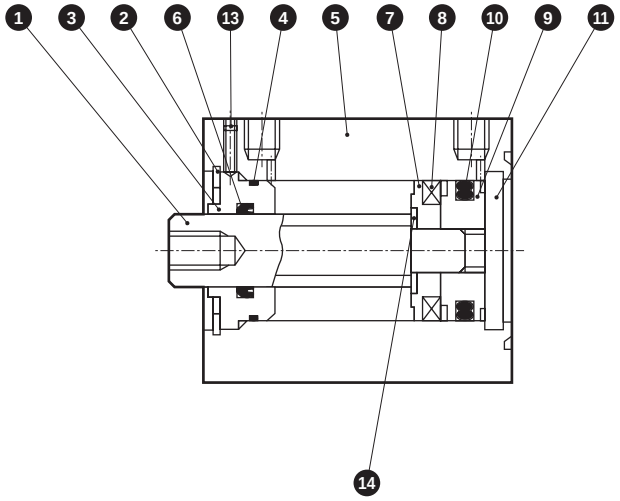

● SSD-M-12 to 25 (double acting/rotation-stop)

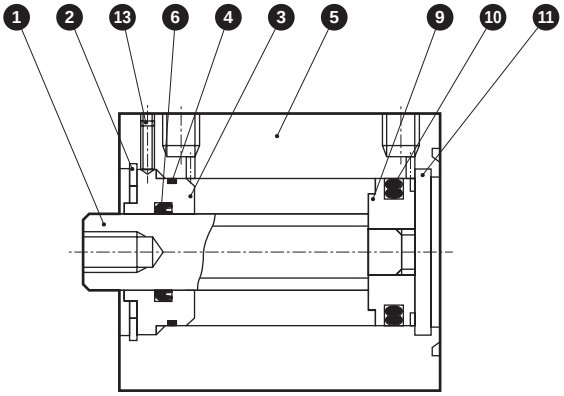

No.	Part name	Material	Remarks
1	Piston rod	Stainless steel	
2	C-snap ring	Steel	Zinc phosphate
3	Rod metal	Special aluminum	Alumite
4	Rod metal gasket	Nitrile rubber	
5	Body	Aluminum alloy	Hard alumite
6	Rod packing	Nitrile rubber	
7	Spacer	ø12: Aluminum alloy ø16 to ø25: Special resin	ø12: Chromate

No.	Part name	Material	Remarks
8	Magnet	Plastic	
9	Piston	Aluminum alloy	Chromate
10	Piston packing	Nitrile rubber	
11	Cover	Stainless steel	
13	Hexagon socket set screw	Steel	
14	Spacer washer	Stainless steel	ø20 to ø25

Repair parts list

Bore size (mm)	Kit No.	Repair parts No.
ø12	SSD-M-12K	4 6 10
ø16	SSD-M-16K	
ø20	SSD-M-20K	
ø25	SSD-M-25K	

Internal structure and parts list

● SSD-ML-32 to 63 (double acting/rotation-stop/with switch)

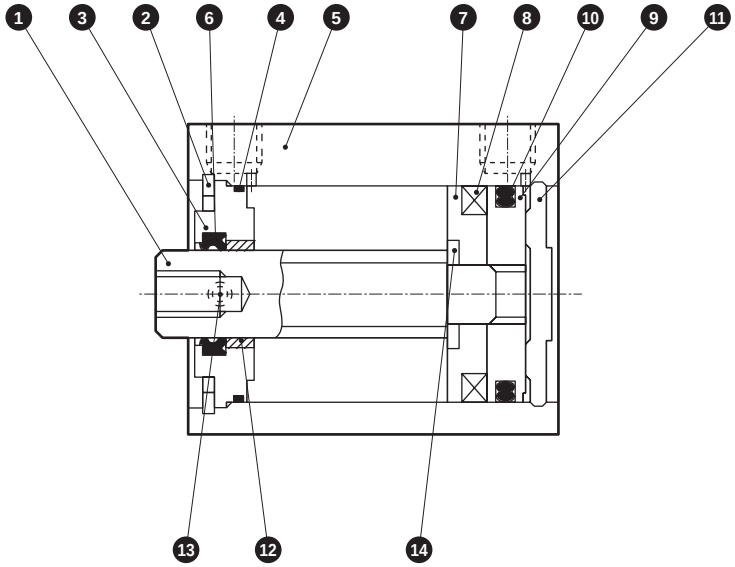

● SSD-M-32 to 63 (double acting/rotation-stop)

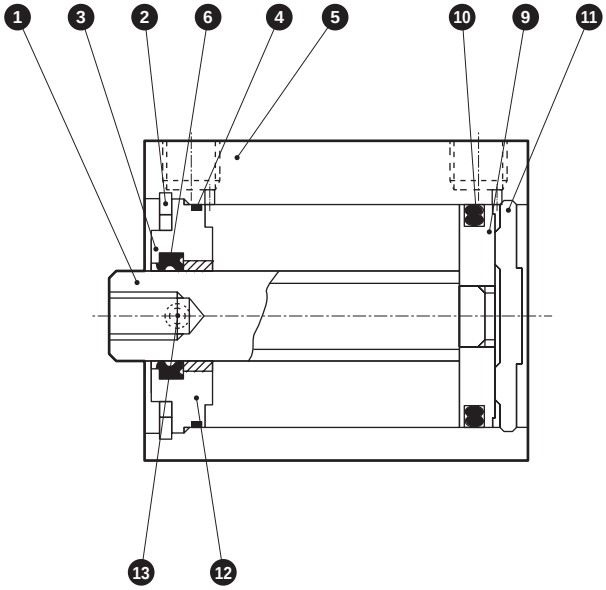

No.	Part name	Material	Remarks
1	Piston rod	Steel	Industrial chrome plating
2	C-snap ring	Steel	Zinc phosphate
3	Rod metal	ø32 to ø50: Special aluminum ø63: Aluminum alloy	Alumite
4	Rod metal gasket	Nitrile rubber	
5	Body	Aluminum alloy	Hard alumite
6	Rod packing	Nitrile rubber	
7	Spacer	ø32 to ø50: Special resin ø63: Aluminum alloy	ø63: Chromate

No.	Part name	Material	Remarks
8	Magnet	Plastic	
9	Piston	Aluminum alloy	Chromate
10	Piston packing	Nitrile rubber	
11	Cover	Aluminum alloy	Alumite
12	Bush	Oil impregnated bearing alloy	
13	Hexagon socket set screw	Steel	
14	Spacer washer	Stainless steel	ø32 to ø50

Repair parts list

Bore size (mm)	Kit No.	Repair parts No.
ø32	SSD-M-32K	❹ ❻ ❿
ø40	SSD-M-40K	
ø50	SSD-M-50K	
ø63	SSD-M-63K	

SCP*3
CMK2
CMA2
SCM
SCG
SCA2
SCS2
CKV2
CAV2/COVP/N2
SSD2
SSG
SSD
CAT
MDC2
MVC
SMG
MSD/MSDG
FC*
STK
SRL3
SRG3
SRM3
SRT3
MRL2
MRG2
SM-25
ShkAbs
FJ
FK
Spd Contr
Ending

Dimensions

● SSD-ML-12 to 25 (with switch)

ø12/ø16

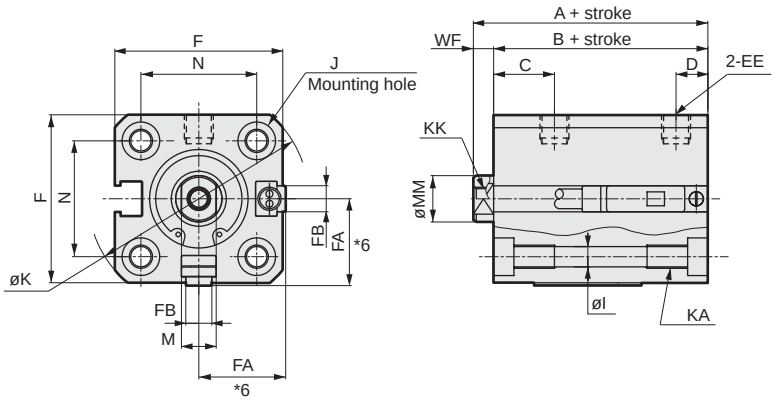

● Rod end male thread

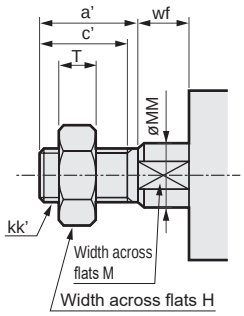

ø20/ø25

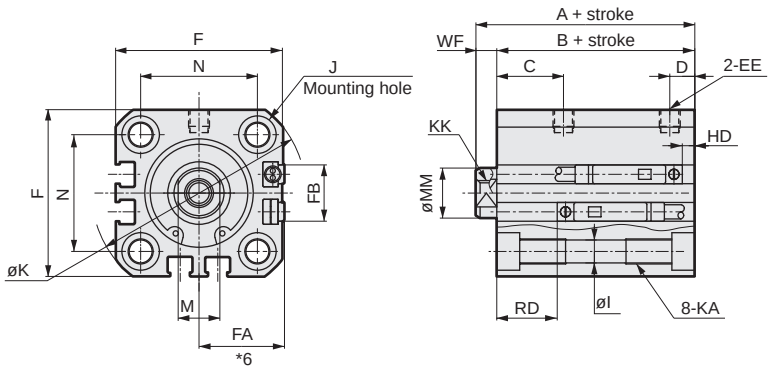

Code / Bore size (mm)	Common dimensions with switch																
	A *1	B *1	C	D	EE	F	FA *6	FB	I	J	K	KA	KK	M	MM	N	WF
ø12	30.5	27	10.5	5.5	M5	25	13(16.5)	4.5	3.5	6.5 spot face depth 3.5	32	M4 depth 7	M3 depth 6	5	6	15.5	3.5
ø16	30.5	27	10.5	5.5	M5	29	15(18.5)	4.5	3.5	6.5 spot face depth 3.5	38	M4 depth 7	M4 depth 8	6	8	20	3.5
ø20	39	34.5	13	5.5	M5	36	18.5(22)	12.5	5.5	9 spot face depth 5.5	47	M6 depth 11	M5 depth 7	8	10	25.5	4.5
ø25	42.5	37.5	16	6	M5	40	20.5(24)	13.5	5.5	9 spot face depth 5.5	51	M6 depth 11	M6 depth 12	10	12	28	5

Switch dimensions / Bore size (mm)	Reed T0H/T0V, T5H/T5V		Proximity T2H/T2V, T3H/T3V T2WH/T2WV, T3WH/T3WV	
	HD *2	RD *2	HD *2	RD *2
ø12	0	7.5	0	7.5
ø16	0	7	0	7
ø20	3	11.5	3	11.5
ø25	3	14.5	3	14.5

Table 1

Bore size	A + stroke	B + stroke
ø12	40.5	37
ø16	40.5	37

● *1 : To calculate A+ stroke or B+ stroke when using custom stroke, apply the next longer standard stroke (instead of the custom stroke) to the stroke value.
(Example) If the custom stroke is 7 mm, apply the standard stroke of 10 mm.

● *2 : HD and RD dimensions for 5 mm stroke differ from these dimensions according to the setting.

● *3 : When the stroke is 5 mm for ø12 and ø16 with switch, (A+ stroke) length and (B+ stroke) length are as shown in Table 1.

● *4 : Refer to page 1312 for HD and RD dimensions of the 2-color LED, off-delay, AC magnetic field proof, T1* and T8* switches.

● *5 : Refer to page 1312 for the protruding dimensions of the 2-color LED, off-delay, AC magnetic field proof, T1* and T8* switches.

● *6 : Dimensions in ( ) of FA are for the L-shaped lead wire.

● *7 : For dimensions of individual accessories, refer to pages 1108 to 1115.

Dimensions of rod end male thread

Code / Bore size (mm)	a'	c'	H	kk'	M	MM	T	wf
ø 12	10.5	9	8	M5	5	6	3.2	3.5
ø 16	12	10	10	M6	6	8	3.6	3.5
ø 20	14	12	13	M8	8	10	5	4.5
ø 25	17.5	15	17	M10x1.25	10	12	6	5

Dimensions

● SSD-M-12 to 25 (without switch)

ø12/ø16

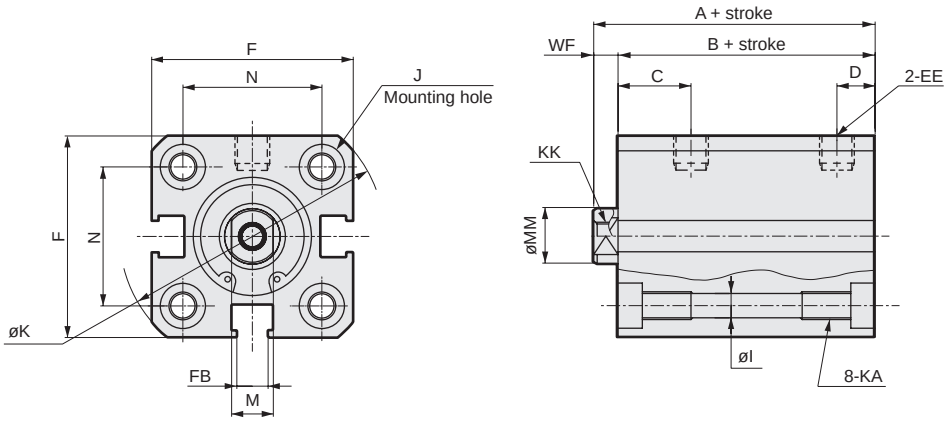

● Rod end male thread

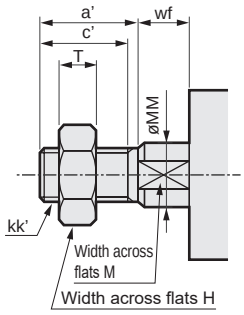

ø20/ø25

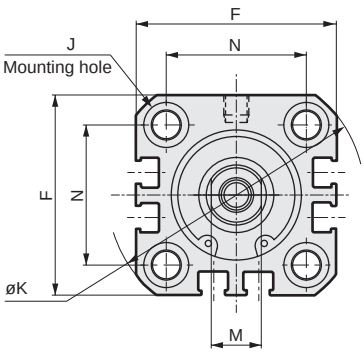

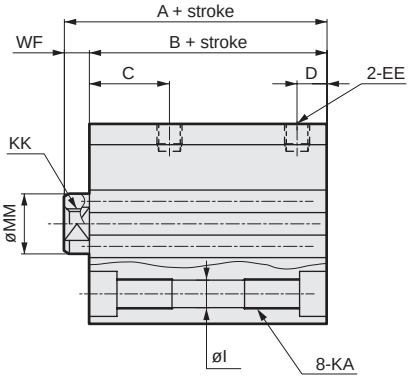

Code / Bore size (mm)	No switch														
	A *1	B *1	C	D	EE	F	I	J	K	KA	KK	M	MM	N	WF
ø12	25.5	22	10.5	5.5	M5	25	3.5	6.5 spot face depth 3.5	32	M4 depth 7	M3 depth 6	5	6	15.5	3.5
ø16	25.5	22	10.5	5.5	M5	29	3.5	6.5 spot face depth 3.5	38	M4 depth 7	M4 depth 8	6	8	20	3.5
ø20	29	24.5	13	5.5	M5	36	5.5	9 spot face depth 5.5	47	M6 depth 11	M5 depth 7	8	10	25.5	4.5
ø25	32.5	27.5	16	6	M5	40	5.5	9 spot face depth 5.5	51	M6 depth 11	M6 depth 12	10	12	28	5

*1: To calculate A+ stroke or B+ stroke when using custom stroke, apply the next longer standard stroke (instead of the custom stroke) to the stroke value.
(Example) If the custom stroke is 7 mm, apply the standard stroke of 10 mm.
*2: Refer to pages 1320 to 1325 for dimensions including the accessories and pages 1108 to 1115 for dimensions of individual accessories.

Dimensions of rod end male thread

Code / Bore size (mm)	a'	c'	H	kk'	M	MM	T	wf
ø 12	10.5	9	8	M5	5	6	3.2	3.5
ø 16	12	10	10	M6	6	8	3.6	3.5
ø 20	14	12	13	M8	8	10	5	4.5
ø 25	17.5	15	17	M10x1.25	10	12	6	5

SCP*3
CMK2
CMA2
SCM
SCG
SCA2
SCS2
CKV2
CAV2/ COVP/N2
SSD2
SSG
SSD
CAT
MDC2
MVC
SMG
MSD/ MSDG
FC*
STK
SRL3
SRG3
SRM3
SRT3
MRL2
MRG2
SM-25
ShkAbs
FJ
FK
Spd Contr
Ending

Dimensions

● SSD-ML-32 to 63 (with switch)

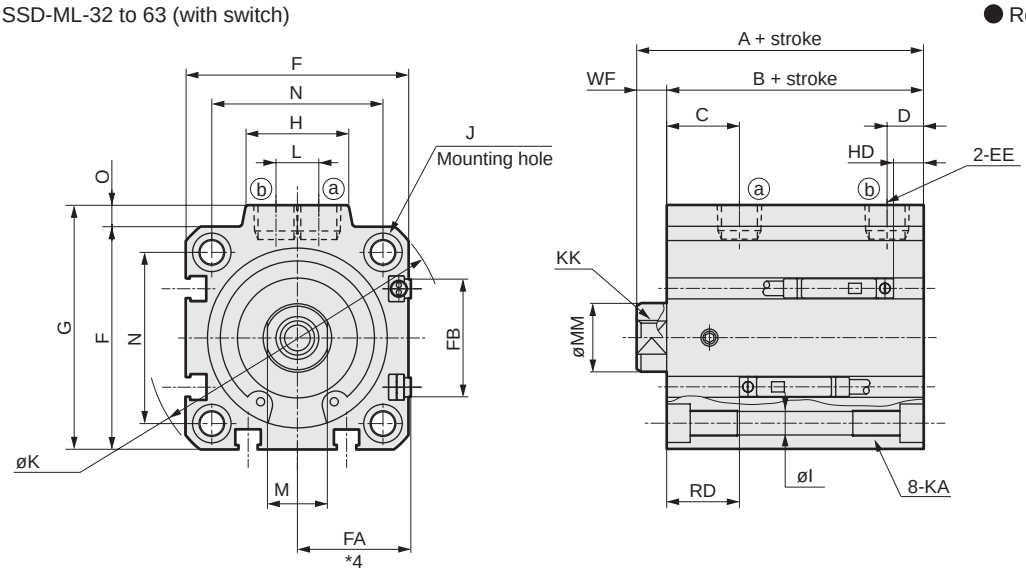

● Rod end male thread

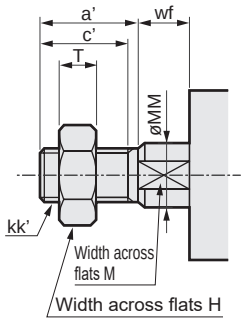

● SSD-M-32 to 63 (without switch)

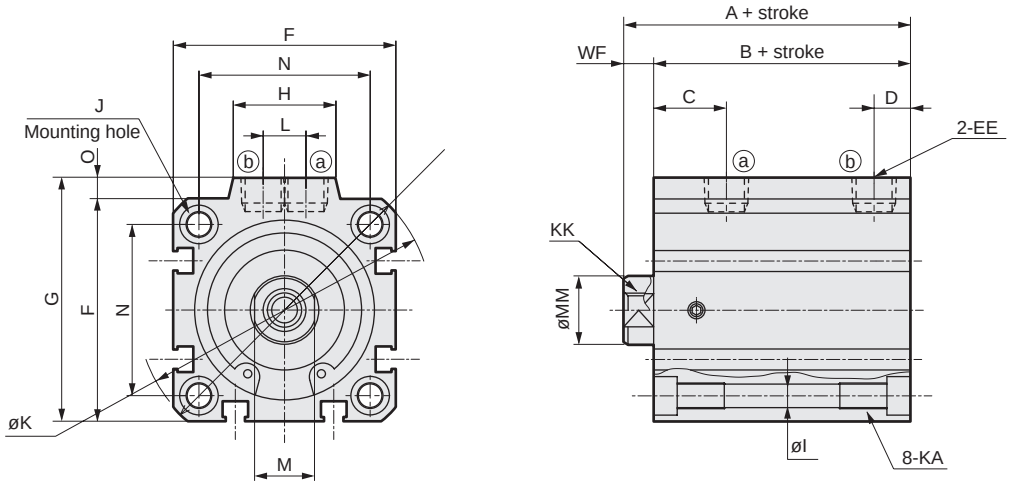

Code / Bore size (mm)	No switch A *1	No switch B *1	A	B	C	D	EE	F	FA *4	FB	G	H	I	J	K	KA	KK	L	M	MM	N	O	WF
ø32	40	33	50	43	18	8	Rc1/8	45	23(26.5)	20.5	49.5	24	5.5	9 spot face Depth 5.5	60	M6 depth 11	M8 depth 13	10	14	16	34	4.5	7
ø40	41.5	34.5	51.5	44.5	17	8.5	Rc1/8	52	26.5(30)	27.5	57	24	5.5	9 spot face Depth 5.5	69	M6 depth 11	M8 depth 13	10	14	16	40	5	7
ø50	43.5	35.5	53.5	45.5	15.5	10.5	RC1/4	64	32.5(36)	28.5	71	33	6.9	11 spot face Depth 6.5	86	M8 depth 13	M10 depth 15	15	18	20	50	7	8
ø63	49	41	59	51	18	11	Rc1/4	77	39(42.5)	28.5	84	33	8.7	14 spot face Depth 9	103	M10 depth 25	M10 depth 15	15	18	20	60	7	8

Switch dimensions	Reed T0H/T0V, T5H/T5V		Proximity T2H/T2V, T3H/T3V T2WH/T2WV, T3WH/T3WV	
Bore size (mm)	HD *2	RD *2	HD *2	RD *2
ø32	3.5	19	3.5	19
ø40	7	17	7	17
ø50	7.5	17.5	7.5	17.5
ø63	12.5	17.5	12.5	17.5

- *1 : To calculate A+ stroke or B+ stroke when using custom stroke, apply the next longer standard stroke (instead of the custom stroke) to the stroke value.
  (Example) If the custom stroke is 7 mm, apply the standard stroke of 10 mm.
- *2 : Refer to page 1313 for HD and RD dimensions of the 2-color LED, off-delay, AC magnetic field proof, T1* and T8* switches.
- *3 : Refer to page 1313 for the protruding dimensions of the 2-color LED, off-delay, AC magnetic field proof, T1* and T8* switches.
- *4 : Dimensions in ( ) of FA are for the L-shaped lead wire.

Dimensions of rod end male thread

Code / Bore size (mm)	a'	c'	H	kk'	M	MM	T	wf
ø 32	23.5	20.5	22	M14x1.5	14	16	8	5
ø 40	23.5	20.5	22	M14x1.5	14	16	8	5
ø 50	28.5	26	27	M18x1.5	18	20	11	5
ø 63	28.5	26	27	M18x1.5	18	20	11	5

* For dimensions of individual accessories, refer to pages 1108 to 1115.

MEMO

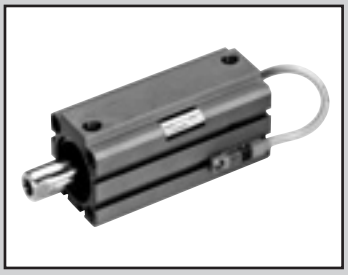

Compact cylinder double acting/coolant proof

SSD-G2/G3 Series

● Bore size: ø16/ø20/ø25/ø32/ø40/ø50/ø63/ø80/ø100

JIS symbol

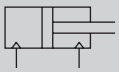

RoHS CAD

Specifications

Item	SSD-G2/G3 SSD-G2L/G3L (With switch)								
Bore size mm	ø16	ø20	ø25	ø32	ø40	ø50	ø63	ø80	ø100
Actuation	Double acting								
Working fluid	Compressed air								
Max. working pressure MPa	1.0								
Min. working pressure MPa	0.15						0.1		
Proof pressure MPa	1.6								
Ambient temperature °C	−10 to 60(However, no freezing)								
Port size	M5			Rc1/8		Rc1/4		Rc3/8	
Stroke tolerance mm	$^{+1.0}_{0}$								
Working piston speed mm/s	50 to 500						50 to 300		
Cushion	No								
Lubrication	Not required(Use turbine oil class 1 ISO VG32 if necessary for lubrication.)								
Allowable absorbed energy J	0.01	0.016	0.021	0.025	0.092	0.1	0.12	0.27	0.56

Stroke

Bore size (mm)	Standard stroke (mm)	Max. stroke (mm)	Min. stroke (mm)	
			No switch	With switch
ø16,ø20	5, 10, 15, 20, 25, 30	30	1	10
ø25,ø32 ø40,ø50	5,10,15,20,25 30,40,50	50		
ø63,ø80,ø100	5,10,20,30,40,50	50		

*1: The custom stroke is available in 1 mm increments. (Less than 10 mm with switch is not available.) However, the total length is the same as that of the next longer standard stroke.

***2: Refer to pages 1320 and 1321 for the min. stroke with mounting brackets LB and LB2.**

Number of installed switches and min. stroke (mm)

Switch quantity	1	2	3	4	5
Switch model No. / Bore size(mm)	T*	T*	T*	T*	T*
ø16	10	10	25	-	-
ø20	10	10	-	-	-
ø25	10	10	35	50	-
ø32	10	10	35	50	-
ø40	10	10	35	50	-
ø50	10	10	35	50	-
ø63	10	10	35	50	-
ø80	10	10	35	50	-
ø100	10	10	35	50	-

Switch specifications

● Proximity switch

Type/model No.	Proximity/2-wire	Proximity/3-wire
Item	T2YLH/T2YLV	T3YLH/T3YLV
Applications	Dedicated for programmable controller	Programmable controller, relay
Power supply voltage	-	10 to 28 VDC
Load voltage/current	10 to 30 VDC, 5 to 20 mA (*1)	30 VDC or less, 50 mA or less
Indicator	Red/green LED (Lit when ON)	
Leakage current	1 mA or less	10 μA or less
Shock resistance	980 m/S^2	
Weight g	1 m:33 3 m:87 5 m:142	

*1: The above max. load current is 20 mA at 25°C. The current is lower than 20 mA if the operating ambient temperature around the switch is higher than 25˚C. (5 to 10 mA at 60˚C)

Cylinder weight table (the weight of the switches is when there are 2 cylinder switches.)

(Unit: g)

Stroke	5		10		15		20		25		30		40		50	
Bore size (mm)	No switch	Switch	No switch	Switch	No switch	Switch	No switch	Switch	No switch	Switch	No switch	Switch	No switch	Switch	No switch	Switch
ø16	62	118	73	118	83	158	94	139	105	150	116	161				
ø20	108	163	120	195	133	208	146	221	158	233	171	246				
ø25	151	242	166	257	182	273	198	289	214	305	229	320	261	352	292	383
ø32	230	344	252	366	274	388	296	410	317	431	339	453	383	497	426	540
ø40	301	444	328	471	354	497	381	524	408	551	434	577	487	630	540	683
ø50	471	665	513	707	555	749	597	791	639	833	682	876	766	960	850	1044
ø63	678	957	733	1012			843	1122			953	1232	1064	1343	1174	1453
ø80	1445	1858	1532	1945			1705	2118			1878	2288	2052	2465	2225	2638
ø100	2098	2665	2212	2779			2439	3006			2667	3234	2894	3461	3122	3689

Theoretical thrust table

(Unit: N)

Bore size (mm)	Operating direction	Working pressure MPa										
		0.1	0.15	0.2	0.3	0.4	0.5	0.6	0.7	0.8	0.9	1.0
ø16	Push	-	30.2	40.2	60.3	80.4	1.01×10^2	1.21×10^2	1.41×10^2	1.61×10^2	1.81×10^2	2.01×10^2
	Pull	-	22.6	30.2	45.2	60.3	75.4	90.5	1.06×10^2	1.21×10^2	1.36×10^2	1.51×10^2
ø20	Push	-	47.1	62.8	94.2	1.26×10^2	1.57×10^2	1.88×10^2	2.20×10^2	2.51×10^2	2.83×10^2	3.14×10^2
	Pull	-	35.3	47.1	70.7	94.2	1.18×10^2	1.41×10^2	1.65×10^2	1.88×10^2	2.12×10^2	2.36×10^2
ø25	Push	-	73.6	98.2	1.47×10^2	1.96×10^2	2.45×10^2	2.95×10^2	3.44×10^2	3.93×10^2	4.42×10^2	4.91×10^2
	Pull	-	56.7	75.6	1.13×10^2	1.51×10^2	1.89×10^2	2.27×10^2	2.64×10^2	3.02×10^2	3.40×10^2	3.78×10^2
ø32	Push	-	1.21×10^2	1.61×10^2	2.41×10^2	3.22×10^2	4.02×10^2	4.83×10^2	5.63×10^2	6.43×10^2	7.24×10^2	8.04×10^2
	Pull	-	90.5	1.21×10^2	1.81×10^2	2.41×10^2	3.02×10^2	3.62×10^2	4.22×10^2	4.83×10^2	5.43×10^2	6.03×10^2
ø40	Push	-	1.88×10^2	2.51×10^2	3.77×10^2	5.03×10^2	6.28×10^2	7.54×10^2	8.80×10^2	1.01×10^3	1.13×10^3	1.26×10^3
	Pull	-	1.58×10^2	2.11×10^2	3.17×10^2	4.22×10^2	5.28×10^2	6.33×10^2	7.39×10^2	8.44×10^2	9.50×10^2	1.06×10^3
ø50	Push	-	2.95×10^2	3.93×10^2	5.89×10^2	7.85×10^2	9.82×10^2	1.18×10^3	1.37×10^3	1.57×10^3	1.77×10^3	1.96×10^3
	Pull	-	2.47×10^2	3.30×10^2	4.95×10^2	6.60×10^2	8.25×10^2	9.90×10^2	1.15×10^3	1.32×10^3	1.48×10^3	1.65×10^3
ø63	Push	3.12×10^2	4.68×10^2	6.23×10^2	9.35×10^2	1.25×10^3	1.56×10^3	1.87×10^3	2.18×10^3	2.49×10^3	2.81×10^3	3.12×10^3
	Pull	2.80×10^2	4.20×10^2	5.61×10^2	8.41×10^2	1.12×10^3	1.40×10^3	1.68×10^3	1.96×10^3	2.24×10^3	2.52×10^3	2.80×10^3
ø80	Push	5.03×10^2	7.54×10^2	1.01×10^3	1.51×10^3	2.01×10^3	2.51×10^3	3.02×10^3	3.52×10^3	4.02×10^3	4.52×10^3	5.03×10^3
	Pull	4.54×10^2	6.80×10^2	9.07×10^2	1.36×10^3	1.81×10^3	2.27×10^3	2.72×10^3	3.17×10^3	3.63×10^3	4.08×10^3	4.54×10^3
ø100	Push	7.85×10^2	1.18×10^3	1.57×10^3	2.36×10^3	3.14×10^3	3.93×10^3	4.71×10^3	5.50×10^3	6.28×10^3	7.07×10^3	7.85×10^3
	Pull	7.15×10^2	1.07×10^3	1.43×10^3	2.14×10^3	2.86×10^3	3.57×10^3	4.29×10^3	5.00×10^3	5.72×10^3	6.43×10^3	7.15×10^3

SCP*3
CMK2
CMA2
SCM
SCG
SCA2
SCS2
CKV2
CAV2/COVP/N2
SSD2
SSG
SSD
CAT
MDC2
MVC
SMG
MSD/MSDG
FC*
STK
SRL3
SRG3
SRM3
SRT3
MRL2
MRG2
SM-25
ShkAbs
FJ
FK
Spd Contr
Ending

How to order

No switch (without magnet for switch)

SSD - G2 - 16 ◯ - 30 ——— N - LB - I

With switch (built-in magnet for switch)

SSD - G2L - 16 ◯ - 30 - T2YLH - R - N - LB - I

Ⓐ Degree of protection level
Ⓑ Bore size
Ⓒ Port thread
Ⓓ Stroke
Ⓔ Switch model No. *7
Ⓕ Switch quantity
Ⓖ Option
Ⓗ Mounting bracket *1 *2 *3
Ⓘ Accessory *4

Code	Description
Ⓐ Degree of protection level	
G2	Coolant proof scraper + packing NBR
G3	Coolant proof scraper + packing FKM
G2L	Coolant proof scraper + packing NBR, with switch
G3L	Coolant proof scraper + packing FKM, with switch
Ⓑ Bore size (mm)	
16	ø16
20	ø20
25	ø25
32	ø32
40	ø40
50	ø50
63	ø63
80	ø80
100	ø100
Ⓒ Port thread	
Blank	Rc thread
NN	NPT thread (ø32 and over) (made-to-order product)
GN	G thread (ø32 and over) (made-to-order product)
Ⓓ Stroke (mm)	
Refer to the stroke table on the following page.	

Ⓔ Switch model No.

Axial lead wire	L-shaped lead	Contact	Voltage		Lead wire
T2YLH*	**T2YLV***	Proximity	DC	2-color	2-wire
T3YLH*	**T3YLV***			LED	3-wire

*** Lead wire length**	
Blank	1 m (standard)
3	3 m (option)
5	5 m (option)
Ⓕ Switch quantity	
R	1 on rod side
H	1 on head side
D	2
Ⓖ Option	
Blank	Rod end female thread
N	Rod end male thread
Ⓗ Mounting bracket	
LB	Axial foot (ø16 to ø25 made-to-order product)
LB2	Axial foot (compact) (ø16 to ø25 made-to-order product)
CB	Clevis bracket (pin and snap ring included)
CB2	Clevis bracket (compact) (pin and snap ring included)
FA	Rod side flange (ø16 to ø25 made-to-order product)
FB	Head side flange
Ⓘ Accessory (available when rod end male thread "N" is selected)	
I	Rod eye
I2	Rod eye (compact)
Y	Rod clevis (pin and snap ring included)
Y2	Rod clevis (compact) (pin and snap ring included)

⚠ Precautions for model No. selection

*1 : The mounting bracket is included at shipment.
*2 : The structure of ø16 to ø25 does not permit retrofitting of the foot bracket (LB, LB2) or flange bracket (FA) on the rod side. Assembly before shipment is available as made to order.
*3 : The projection dimension of piston rod WF when LB2 or FA is selected is different from that of the standard. Refer to the dimensions on pages 1109 and 1110. The number of the specified protruding dimension will be added at the end of the model No. printed on the metal plate on the body.
*4 : "I" and "Y" cannot be selected together.
*5 : Refer to Ending Page 85 for custom specifications of rod end form.
*6 : Refer to pages 1086 to 1087 for combinations of variations/options.
*7 : Switches are shipped with the product. Contact CKD if assembling before shipment is necessary.

[Example of model No.]

SSD-G2L-32-30-T2YH-R-N

Model: Compact cylinder

Ⓐ Degree of protection level : Coolant proof scraper + NBR packing, with switch
Ⓑ Bore size : ø32mm
Ⓒ Port thread : Rc thread
Ⓓ Stroke : 30mm
Ⓔ Switch model No. : Proximity switch T2YLH, lead wire 1 m
Ⓕ Switch quantity : 1 on rod side
Ⓖ Option : Rod end male thread
Ⓗ Mounting bracket : Axial foot

How to order switch

SW - T2YLH

Switch model No.
(Item Ⓔ on page 1232)

[Stroke table]

Stroke (mm)		Applicable bore size								
		ø16	ø20	ø25	ø32	ø40	ø50	ø63	ø80	ø100
Standard stroke	5	●	●	●	●	●	●	●	●	●
	10	●	●	●	●	●	●	●	●	●
	15	●	●	●	●	●	●			
	20	●	●	●	●	●	●	●	●	●
	25	●	●	●	●	●	●			
	30	●	●	●	●	●	●	●	●	●
	40			●	●	●	●	●	●	●
	50			●	●	●	●	●	●	●
Min. stroke (mm) *1		1								
Max. stroke (mm)		30		50						
Custom stroke *2		In 1 mm increments								

*1 : Less than 10 mm stroke is not available.
Refer to page 1230 for the number of installed switches and the min. stroke.
*2 : The total length is the same as that of the next longer standard stroke.
*3 : Refer to pages 1320 and 1321 for the min. stroke with mounting brackets LB and LB2.

How to order mounting bracket

Bore size (mm) / Mounting bracket	ø16	ø20	ø25	ø32	ø40	ø50	ø63	ø80	ø100
Foot (LB)	SSD-LB-16	SSD-LB-20	SSD-LB-25	SSD-LB-32	SSD-LB-40	SSD-LB-50	SSD-LB-63	SSD-LB-80	SSD-LB-100
Foot (LB2)	SSD-LB2-16	SSD-LB2-20	SSD-LB2-25	SSD-LB2-32	SSD-LB2-40	SSD-LB2-50	SSD-LB2-63	SSD-LB2-80	SSD-LB2-100
Flange (FA/FB)	SSD-FA-16	SSD-FA-20	SSD-FA-25	SSD-FA-32	SSD-FA-40	SSD-FA-50	SSD-FA-63	SSD-FA-80	SSD-FA-100
Clevis bracket (CB)	SSD-CB-16	SSD-CB-20	SSD-CB-25	SSD-CB-32	SSD-CB-40	SSD-CB-50	SSD-CB-63	SSD-CB-80	SSD-CB-100
Clevis bracket (CB2)	SSD-CB2-16	SSD-CB2-20	SSD-CB2-25	SSD-CB2-32	SSD-CB2-40	SSD-CB2-50	SSD-CB2-63	SSD-CB2-80	SSD-CB2-100

*1: The foot mounting bracket is provided as 2 pcs./set.
*2: The structure of ø16 to ø25 does not permit retrofitting of the foot bracket (LB, LB2) or flange bracket (FA) on the rod side. Contact CKD for details.

SCP*3
CMK2
CMA2
SCM
SCG
SCA2
SCS2
CKV2
CAV2/COVP/N2
SSD2
SSG
SSD
CAT
MDC2
MVC
SMG
MSD/MSDG
FC*
STK
SRL3
SRG3
SRM3
SRT3
MRL2
MRG2
SM-25
ShkAbs
FJ
FK
Spd Contr
Ending

Internal structure and parts list

- Degree of protection: Packing NBR SSD-G2/G2L
- Degree of protection: Packing FKM SSD-G3/G3L

● SSD-G $\frac{2}{3}$L-16
(with switch)

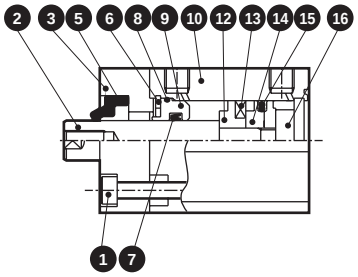

● SSD-G $\frac{2}{3}$L-20, 25
(with switch)

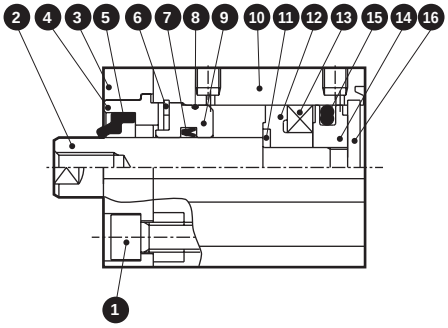

● SSD-G $\frac{2}{3}$L-32 to 50
(with switch)

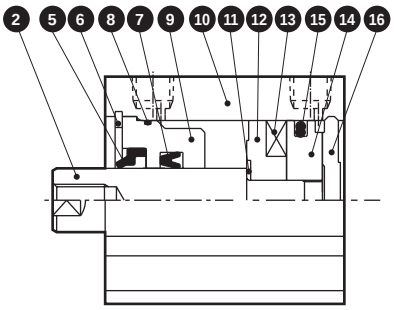

● SSD-G $\frac{2}{3}$L-63 to 100
(with switch)

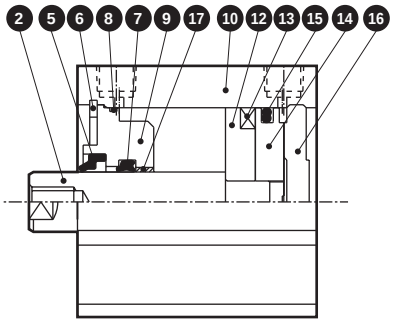

● SSD-G $\frac{2}{3}$-16
(without switch)

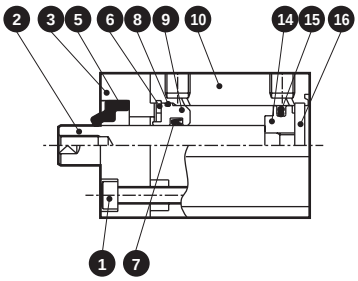

● SSD-G $\frac{2}{3}$-20, 25
(without switch)

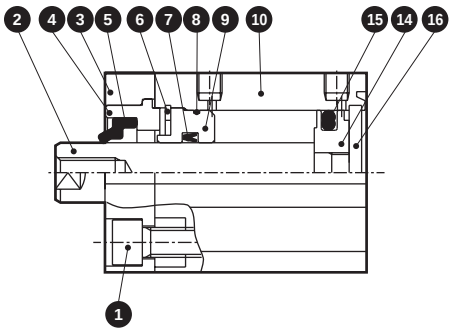

● SSD-G $\frac{2}{3}$-32 to 50
(without switch)

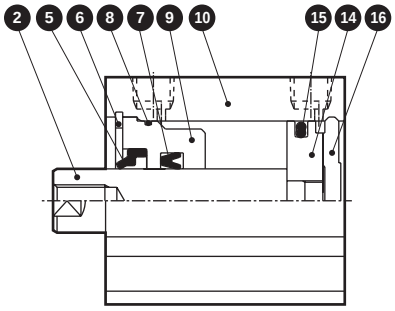

● SSD-G $\frac{2}{3}$-63 to 100
(without switch)

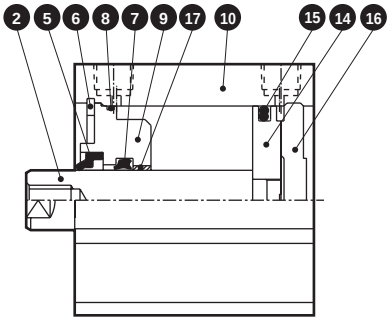

Main parts list

No.	Part name		Material	Remarks
1	Hexagon socket head cap screw		Stainless steel	ø16 to ø25
2	Piston rod		Stainless steel	Industrial chrome plating
3	Adaptor (A)		Aluminum alloy	Alumite: ø16 to ø25 only
4	Adaptor (B)		Aluminum alloy	Alumite: ø20/ø25 only
5	Scraper	G2	Nitrile rubber	
		G3	Fluoro rubber	
6	C-snap ring (for hole)		Stainless steel	
7	Rod packing	G2	Nitrile rubber	
		G3	Fluoro rubber	
8	Rod metal gasket	G2	Nitrile rubber	
		G3	Fluoro rubber	

No.	Part name		Material	Remarks
9	Rod metal		Special aluminum	Alumite
10	Body		Aluminum alloy	Hard alumite
11	Spacer washer		Stainless steel	ø16 to ø50 only
12	Spacer		ø16 to ø50: Special resin ø63 to ø100: Aluminum alloy	
13	Magnet		Plastic	
14	Piston		Aluminum alloy	Chromate
15	Piston packing	G2	Nitrile rubber	
		G3	Fluoro rubber	
16	Cover		ø16 to ø25: Stainless steel	
			ø32 to ø100: Aluminum alloy	Alumite
17	Bush		Oiles drymet	ø63 to ø100 only

Repair parts list

Part name / Bore size (mm)	Kit No.	Repair parts No.
ø16	SSD-G2- 16K	❺ ❼ ❽ ⓯
	SSD-G3- 16K	
ø20	SSD-G2- 20K	
	SSD-G3- 20K	
ø25	SSD-G2- 25K	
	SSD-G3- 25K	
ø32	SSD-G2- 32K	
	SSD-G3- 32K	
ø40	SSD-G2- 40K	
	SSD-G3- 40K	
ø50	SSD-G2- 50K	
	SSD-G3- 50K	
ø63	SSD-G2- 63K	
	SSD-G3- 63K	
ø80	SSD-G2- 80K	
	SSD-G3- 80K	
ø100	SSD-G2-100K	
	SSD-G3-100K	

Note: Specify the kit No. when placing an order.

Dimensions

CAD

- Degree of protection: Packing NBR
  SSD-G2/G2L
- Degree of protection: Packing FKM
  SSD-G3/G3L

ø16

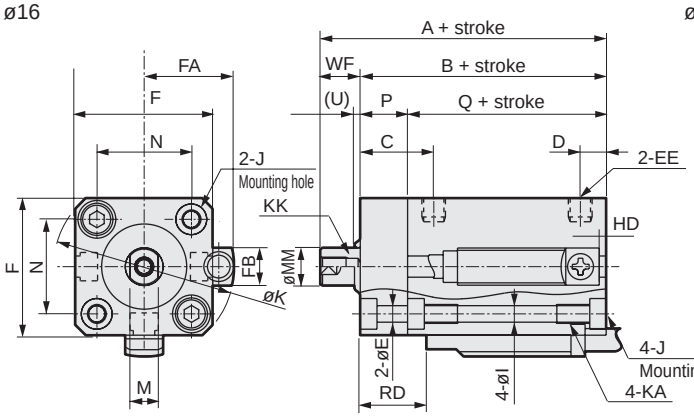

ø20/ø25

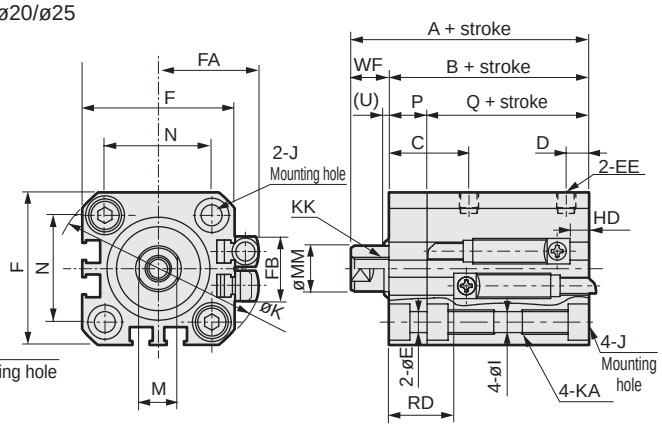

ø32 to ø100

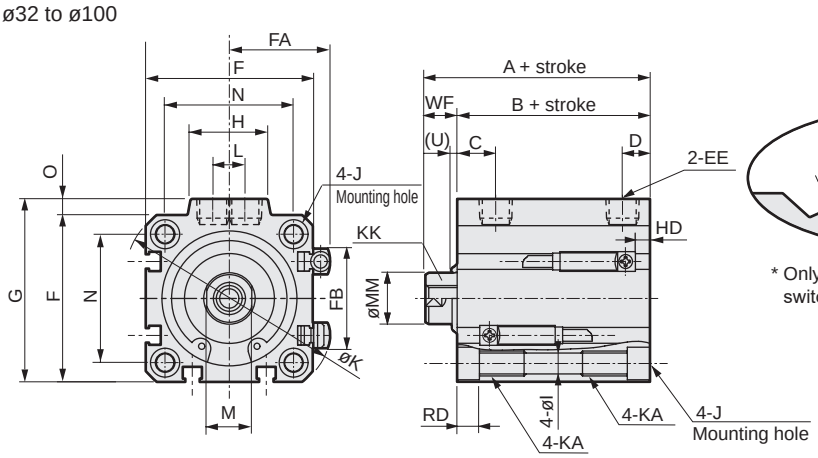

[Bore size ø100]

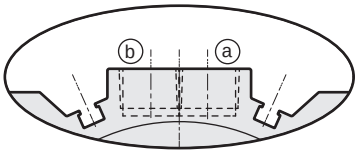

* Only for ø100, the port surface has switch grooves.

● Rod end male thread

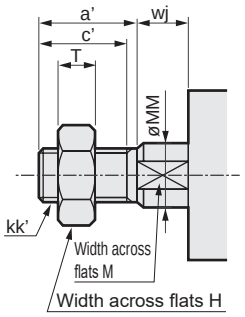

*1: To calculate A+ stroke or B+ stroke when using custom stroke, apply the next longer standard stroke (instead of the custom stroke) to the stroke value. (Example) If the custom stroke is 7 mm, apply the standard stroke of 10 mm.

Code / Bore size (mm)	Dimensions (no switch) A *1	B *1	Q *1	Common dimensions with switch A *1	B *1	Q *1	C	D	E	EE	F	FA	FB	G	H	I	J	K	KA	KK
ø16	35.5	27	17	45.5	37	27	15.5	5.5	3.4	M5	29	20.8	8	-	-	3.5	ø6.5 spot face depth 3.5	38	M4 depth 7	M4 depth 8
ø20	39	29.5	19.5	49	39.5	29.5	18	5.5	5.5	M5	36	24.3	16	-	-	5.5	ø9 spot face depth 5.5	47	M6 depth 11	M5 depth 7
ø25	42.5	32.5	22.5	52.5	42.5	32.5	21	6	5.5	M5	40	26.3	17	-	-	5.5	ø9 spot face depth 5.5	51	M6 depth 11	M6 depth 12
ø32	45	33	-	55	43	-	8	8	5.5	Rc1/8	45	28.8	24	49.5	24	5.5	ø9 spot face depth 5.5	60	M6 depth 11	M8 depth 13
ø40	51.5	39.5	-	61.5	49.5	-	12	8.5	5.5	Rc1/8	52	32.3	31	57	24	5.5	ø9 spot face depth 5.5	69	M6 depth 11	M8 depth 13
ø50	53.5	40.5	-	63.5	50.5	-	10.5	10.5	5.5	Rc1/4	64	38.3	32	71	33	6.9	ø11 spot face depth 6.5	86	M8 depth 13	M10 depth 15
ø63	59	46	-	69	56	-	13	11	5.5	Rc1/4	77	44.8	32	84	33	8.7	ø14 spot face depth 9	103	M10 depth 25	M10 depth 15
ø80	68.5	53.5	-	78.5	63.5	-	16	13	5.5	Rc3/8	98	55.3	32	104	38	10.5	ø17.5 spot face depth 11	132	M12 depth 28	M16 depth 21
ø100	80	63	-	90	73	-	23	15	5.5	Rc3/8	117	64.8	32	123.5	38	10.5	ø17.5 spot face depth 11	156	M12 depth 28	M20 depth 27

Code / Bore size (mm)	Common dimensions with switch L	M	MM	N	O	P	U	WF	Proximity T2YLH, T2YLV, T3YLH, T3YLV HD	RD	Dimensions of rod end male thread part a'	c'	H	kk'	M	MM	T	wj
ø16	-	6	8	20	-	10	3	8.5	4.5	12.5	12	10	10	M6	6	8	3.6	8.5
ø20	-	8	10	25.5	-	10	3	9.5	1.5	18.0	14	12	13	M8	8	10	5	9.5
ø25	-	10	12	28	-	10	3	10	2.0	20.0	17.5	15	17	M10x1.25	10	12	6	10
ø32	10	14	16	34	4.5	-	0	12	4.5	20.5	23.5	20.5	22	M14x1.5	14	16	8	10
ø40	10	14	16	40	5	-	2	12	8.0	23.5	23.5	20.5	22	M14x1.5	14	16	8	10
ø50	15	17	20	50	7	-	2	13	9.0	23.5	28.5	26	27	M18x1.5	17	20	11	10
ø63	15	17	20	60	7	-	2	13	13.0	24.0	28.5	26	27	M18x1.5	17	20	11	10
ø80	15	22	25	77	6	-	2	15	19.0	26.5	35.5	32.5	32	M22x1.5	22	25	13	13
ø100	15	27	30	94	6.5	-	2	17	24.5	30.5	35.5	32.5	41	M26x1.5	27	30	16	13

* For dimensions of individual accessories, refer to pages 1108 to 1115.

MEMO

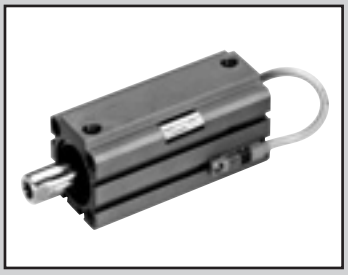

Compact cylinder double acting/high load/coolant proof

SSD-KG2/KG3 Series

● Bore size: ø16/ø20/ø25/ø32/ø40/ø50/ø63/ø80/ø100

JIS symbol

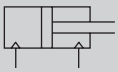

RoHS CAD

Specifications

Item	SSD-KG2/KG3 SSD-KG2L/KG3L (with switch)								
Bore size mm	ø16	ø20	ø25	ø32	ø40	ø50	ø63	ø80	ø100
Actuation	Double acting								
Working fluid	Compressed air								
Max. working pressure MPa	1.0 (≈150 psi, 10 bar)								
Min. working pressure MPa	0.15 (≈22 psi, 1.5 bar)						0.1 (≈15 psi, 1 bar)		
Proof pressure MPa	1.6 (≈230 psi, 16 bar)								
Ambient temperature °C	-10 (14°F) to 60 (140°F) (no freezing)								
Port size	M5x0.8			Rc1/8		Rc1/4		Rc3/8	
Stroke tolerance mm	$^{+2.0}_{0}$								
Working piston speed mm/s	50 to 500						50 to 300		
Cushion	Rubber cushion								
Lubrication	Not required (use turbine oil class 1 ISO VG32 if necessary for lubrication)								
Allowable absorbed energy J	0.09	0.16	0.16	0.4	0.63	0.98	1.56	2.51	3.92

Stroke

Bore size (mm)	Standard stroke (mm)	Max. stroke (mm)	Min. stroke (mm)	
			No switch	With switch
ø16,ø20	5, 10, 15, 20, 25, 30, 40, 50	100 *2	1	10
ø25,ø32,ø40,ø50	10, 15, 20, 25, 30, 40, 50, 60, 70, 80, 90, 100	150 *2		
ø63,ø80,ø100	10, 20, 30, 40, 50, 60, 70, 80, 90, 100	200 *2		

*1 : The custom stroke is available in 1 mm increments. (Less than 10 mm with switch is not available.) However, the total length is the same as that of the next longer standard stroke.

*2 : Stroke over standard to maximum is available in increments of 10. (Example) ø16: 60, 70, 80, 90, 100
Dimensions of custom stroke (example: 64 mm stroke) are the same as the next longer stroke (example: 70 mm stroke).

Number of installed switches and min. stroke (mm)

Switch quantity	1	2	3	4	5
Switch model No. / Bore size (mm)	T*	T*	T*	T*	T*
ø16	10	10	25	-	-
ø20	10	10	35	50	65
ø25	10	10	35	50	65
ø32	10	10	35	50	65
ø40	10	10	35	50	65
ø50	10	10	35	50	65
ø63	10	10	35	50	65
ø80	10	10	35	50	65
ø100	10	10	35	50	65

Switch specifications

● Proximity switch

Type/model No.	Proximity/2-wire	Proximity/3-wire
Item	T2YLH/T2YLV	T3YLH/T3YLV
Applications	Dedicated for programmable controller	Programmable controller, relay
Power supply voltage	-	10 to 28 VDC
Load voltage/current	10 to 30 VDC, 5 to 20 mA *1	30 VDC or less, 50 mA or less
Indicator	Red/green LED (Lit when ON)	
Leakage current	1 mA or less	10 μA or less
Shock resistance	980 m/S^2	
Weight g	1 m:33 3 m:87 5 m:142	

*1: The above max. load current is 20 mA at 25°C. The current is lower than 20 mA if the operating ambient temperature around the switch is higher than 25˚C. (5 to 10 mA at 60˚C)

Cylinder weight

(Unit: g)

Stroke	5		10		15		20		25		30		40		50		60		70		80		90		100	
Bore size (mm)	No switch	Switch	No switch	Switch	No switch	Switch	No switch	Switch	No switch	Switch	No switch	Switch	No switch	Switch	No switch	Switch	No switch	Switch	No switch	Switch	No switch	Switch	No switch	Switch	No switch	Switch
ø16	69	114	79	124	90	135	101	146	112	157	123	168	145	179	167	201	189	223	211	245	233	267	255	289	277	311
ø20	88	163	101	176	114	189	126	201	139	214	151	226	176	251	201	276	226	301	251	326	276	351	301	376	326	401
ø25			134	225	150	241	166	257	181	272	198	289	230	321	262	353	294	385	326	417	358	449	390	481	422	513
ø32			232	346	253	367	275	389	297	411	319	433	362	476	405	519	448	562	491	605	534	648	577	691	620	734
ø40			316	459	343	486	369	512	395	538	422	565	475	618	528	671	581	724	634	777	687	830	740	883	793	936
ø50			509	703	551	745	594	788	637	831	678	872	762	956	846	1040	930	1124	1014	1208	1098	1292	1182	1376	1266	1460
ø63			727	1006			837	1116			948	1227	1058	1337	1168	1447	1278	1557	1388	1667	1498	1777	1608	1887	1718	1997
ø80			1274	1687			1447	1860			1621	2034	1794	2207	1967	2380	2140	2553	2313	2726	2486	2899	2659	3072	2832	3245
ø100			1887	2454			2115	2682			2342	2909	2570	3137	2798	3365	3026	3593	3254	3821	3482	4049	3710	4277	3938	4505

Stroke	110		120		130		140		150		160		170		180		190		200	
Bore size (mm)	No switch	Switch	No switch	Switch	No switch	Switch	No switch	Switch	No switch	Switch	No switch	Switch	No switch	Switch	No switch	Switch	No switch	Switch	No switch	Switch
ø20	351	426	376	451	401	476	426	501	451	526										
ø25	454	545	486	577	518	609	550	641	582	673										
ø32	663	777	706	820	749	863	792	906	835	949										
ø40	846	989	899	1042	952	1095	1005	1148	1058	1201										
ø50	1350	1544	1434	1628	1518	1712	1602	1796	1686	1880										
ø63	1828	2107	1938	2217	2048	2327	2158	2437	2268	2547	2378	2657	2488	2767	2598	2877	2708	2987	2818	3097
ø80	3005	3418	3178	3591	3351	3764	3524	3937	3697	4110	3870	4283	4043	4456	4216	4629	4389	4802	4562	4975
ø100	4166	4733	4394	4961	4622	5189	4850	5417	5078	5645	5306	5873	5534	6101	5762	6329	5990	6557	6218	6785

Theoretical thrust table

(Unit: N)

Bore size (mm)	Operating direction	Working pressure MPa										
		0.1	0.15	0.2	0.3	0.4	0.5	0.6	0.7	0.8	0.9	1.0
ø16	Push	-	30.2	40.2	60.3	80.4	1.01×10^2	1.21×10^2	1.41×10^2	1.61×10^2	1.81×10^2	2.01×10^2
	Pull	-	22.6	30.2	45.2	60.3	75.4	90.5	1.06×10^2	1.21×10^2	1.36×10^2	1.51×10^2
ø20	Push	-	47.1	62.8	94.2	1.26×10^2	1.57×10^2	1.88×10^2	2.20×10^2	2.51×10^2	2.83×10^2	3.14×10^2
	Pull	-	35.3	47.1	70.7	94.2	1.18×10^2	1.41×10^2	1.65×10^2	1.88×10^2	2.12×10^2	2.36×10^2
ø25	Push	-	73.6	98.2	1.47×10^2	1.96×10^2	2.45×10^2	2.95×10^2	3.44×10^2	3.93×10^2	4.42×10^2	4.91×10^2
	Pull	-	56.7	75.6	1.13×10^2	1.51×10^2	1.89×10^2	2.27×10^2	2.64×10^2	3.02×10^2	3.40×10^2	3.78×10^2
ø32	Push	-	1.21×10^2	1.61×10^2	2.41×10^2	3.22×10^2	4.02×10^2	4.83×10^2	5.63×10^2	6.43×10^2	7.24×10^2	8.04×10^2
	Pull	-	90.5	1.21×10^2	1.81×10^2	2.41×10^2	3.02×10^2	3.62×10^2	4.22×10^2	4.83×10^2	5.43×10^2	6.03×10^2
ø40	Push	-	1.88×10^2	2.51×10^2	3.77×10^2	5.03×10^2	6.28×10^2	7.54×10^2	8.80×10^2	1.01×10^3	1.13×10^3	1.26×10^3
	Pull	-	1.58×10^2	2.11×10^2	3.17×10^2	4.22×10^2	5.28×10^2	6.33×10^2	7.39×10^2	8.44×10^2	9.50×10^2	1.06×10^3
ø50	Push	-	2.95×10^2	3.93×10^2	5.89×10^2	7.85×10^2	9.82×10^2	1.18×10^3	1.37×10^3	1.57×10^3	1.77×10^3	1.96×10^3
	Pull	-	2.47×10^2	3.30×10^2	4.95×10^2	6.60×10^2	8.25×10^2	9.90×10^2	1.15×10^3	1.32×10^3	1.48×10^3	1.65×10^3
ø63	Push	3.12×10^2	4.68×10^2	6.23×10^2	9.35×10^2	1.25×10^3	1.56×10^3	1.87×10^3	2.18×10^3	2.49×10^3	2.81×10^3	3.12×10^3
	Pull	2.80×10^2	4.20×10^2	5.61×10^2	8.41×10^2	1.12×10^3	1.40×10^3	1.68×10^3	1.96×10^3	2.24×10^3	2.52×10^3	2.80×10^3
ø80	Push	5.03×10^2	7.54×10^2	1.01×10^3	1.51×10^3	2.01×10^3	2.51×10^3	3.02×10^3	3.52×10^3	4.02×10^3	4.52×10^3	5.03×10^3
	Pull	4.54×10^2	6.80×10^2	9.07×10^2	1.36×10^3	1.81×10^3	2.27×10^3	2.72×10^3	3.17×10^3	3.63×10^3	4.08×10^3	4.54×10^3
ø100	Push	7.85×10^2	1.18×10^3	1.57×10^3	2.36×10^3	3.14×10^3	3.93×10^3	4.71×10^3	5.50×10^3	6.28×10^3	7.07×10^3	7.85×10^3
	Pull	7.15×10^2	1.07×10^3	1.43×10^3	2.14×10^3	2.86×10^3	3.57×10^3	4.29×10^3	5.00×10^3	5.72×10^3	6.43×10^3	7.15×10^3

How to order

No switch (without magnet for switch)

SSD - KG2 - 16 - 30 ——— N - LB - I

With switch (built-in magnet for switch)

SSD - KG2L - 16 - 30 - T2YLH - R - N - LB - I

Ⓐ Degree of protection level

Ⓑ Bore size

Ⓒ Stroke

Ⓓ Switch model No. *7

Ⓔ Switch quantity

Ⓕ Option

Ⓖ Mounting bracket *1 *2 *3

Ⓗ Accessory *4

Code	Description
Ⓐ Degree of protection level	
KG2	High load + coolant proof scraper + packing NBR
KG3	High load + coolant proof scraper + packing FKM
KG2L	High load + coolant proof scraper + packing NBR, with switch
KG3L	High load + coolant proof scraper + packing FKM, with switch
Ⓑ Bore size (mm)	
16	ø16
20	ø20
25	ø25
32	ø32
40	ø40
50	ø50
63	ø63
80	ø80
100	ø100
Ⓒ Stroke (mm)	
Refer to the stroke table on the following page.	

Ⓓ Switch model No.

Axial lead wire	L-shaped lead	Contact	Voltage		Lead wire
T2YLH*	**T2YLV***	Proximity	DC	2-color	2-wire
T3YLH*	**T3YLV***			LED	3-wire

*** Lead wire length**	
Blank	1 m (standard)
3	3 m (option)
5	5 m (option)

Ⓔ Switch quantity	
R	1 on rod side
H	1 on head side
D	2
Ⓕ Option	
Blank	Rod end female thread
N	Rod end male thread
Ⓖ Mounting bracket	
LB	Axial foot (ø16 to ø25 made-to-order product)
LB2	Axial foot (compact) (ø16 to ø25 made-to-order product)
CB	Clevis bracket (pin and snap ring included)
CB2	Clevis bracket (compact) (pin and snap ring included)
FA	Rod side flange (ø16 to ø25 made-to-order product)
FB	Head side flange
Ⓗ Accessory (available when rod end male thread "N" is selected)	
I	Rod eye
I2	Rod eye (compact)
Y	Rod clevis (pin and snap ring included)
Y2	Rod clevis (compact) (pin and snap ring included)

⚠ Precautions for model No. selection

*1 : The mounting bracket is included at shipment.
*2 : The structure of ø16 to ø25 does not permit retrofitting of the foot bracket (LB, LB2) or flange bracket (FA) on the rod side. Assembly before shipment is available as made to order.
*3 : The projection dimension of piston rod WF when LB2 or FA is selected is different from that of the standard. Refer to the dimensions on pages 1109 and 1110. The number of the specified protruding dimension will be added at the end of the model No. printed on the metal plate on the body.
*4 : "I" and "Y" cannot be selected together.
*5 : Refer to Ending Page 85 for custom specifications of rod end form.
*6 : Refer to pages 1088 and 1089 for combinations of variations/options.
*7 : Switches are shipped with the product. Contact CKD if assembling before shipment is necessary.

[Example of model No.]

SSD-KG2L-32-30-T2YLH-R-N

Model: Compact cylinder, high load

Ⓐ Degree of protection level : Coolant proof scraper + NBR packing, with switch
Ⓑ Bore size : ø32 mm
Ⓒ Stroke : 30 mm
Ⓓ Switch model No. : Proximity switch T2YLH, lead wire 1 m
Ⓔ Switch quantity : 1 on rod side
Ⓕ Option : Rod end male thread
Ⓖ Mounting bracket : Axial foot

How to order switch

SW - T2YLH

Switch model No.
(Item Ⓓ on page 1240)

[Stroke table]

Stroke (mm)		Applicable bore size								
		ø16	ø20	ø25	ø32	ø40	ø50	ø63	ø80	ø100
Standard stroke	5	●	●							
	10	●	●	●	●	●	●	●	●	●
	15	●	●	●	●	●	●			
	20	●	●	●	●	●	●	●	●	●
	25	●	●	●	●	●	●			
	30	●	●	●	●	●	●	●	●	●
	40	●	●	●	●	●	●	●	●	●
	50	●	●	●	●	●	●	●	●	●
	60			●	●	●	●	●	●	●
	70			●	●	●	●	●	●	●
	80			●	●	●	●	●	●	●
	90			●	●	●	●	●	●	●
	100			●	●	●	●	●	●	●
Min. stroke (mm) *1		1								
Max. stroke (mm)		100		150				200		
Custom stroke *2		In 1 mm increments								

*1 : Less than 10 mm stroke is not available.
Refer to page 1238 for the number of installed switches and the min. stroke.
*2 : The total length is the same as that of the next longer standard stroke.

How to order mounting bracket

Bore size (mm) / Mounting bracket	ø16	ø20	ø25	ø32	ø40	ø50	ø63	ø80	ø100
Foot (LB)	SSD-LB-16	SSD-LB-20	SSD-LB-25	SSD-LB-32	SSD-LB-40	SSD-LB-50	SSD-LB-63	SSD-LB-80	SSD-LB-100
Foot (LB2)	SSD-LB2-16	SSD-LB2-20	SSD-LB2-25	SSD-LB2-32	SSD-LB2-40	SSD-LB2-50	SSD-LB2-63	SSD-LB2-80	SSD-LB2-100
Flange (FA/FB)	SSD-FA-16	SSD-FA-20	SSD-FA-25	SSD-FA-32	SSD-FA-40	SSD-FA-50	SSD-FA-63	SSD-FA-80	SSD-FA-100
Clevis bracket (CB)	SSD-CB-16	SSD-CB-20	SSD-CB-25	SSD-CB-32	SSD-CB-40	SSD-CB-50	SSD-CB-63	SSD-CB-80	SSD-CB-100
Clevis bracket (CB2)	SSD-CB2-16	SSD-CB2-20	SSD-CB2-25	SSD-CB2-32	SSD-CB2-40	SSD-CB2-50	SSD-CB2-63	SSD-CB2-80	SSD-CB2-100

*1: The foot mounting bracket is provided as 2 pcs./set.
*2: The structure of ø16 to ø25 does not permit retrofitting of the foot bracket (LB, LB2) or flange bracket (FA) on the rod side. Contact CKD for details.

SCP*3
CMK2
CMA2
SCM
SCG
SCA2
SCS2
CKV2
CAV2/COVP/N2
SSD2
SSG
SSD
CAT
MDC2
MVC
SMG
MSD/MSDG
FC*
STK
SRL3
SRG3
SRM3
SRT3
MRL2
MRG2
SM-25
ShkAbs
FJ
FK
Spd Contr
Ending

Internal structure and parts list

- Degree of protection: Packing NBR SSD-KG2/KG2L
- Degree of protection: Packing FKM SSD-KG3/KG3L

● SSD-KG$^{2}_{3}$L-16
(with switch)

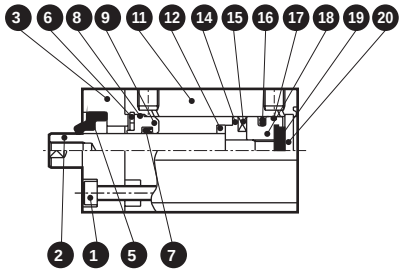

● SSD-KG$^{2}_{3}$L-20, 25
(with switch)

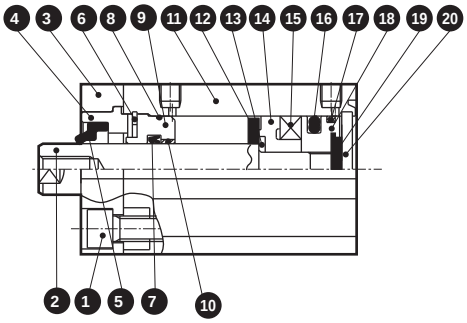

● SSD-KG$^{2}_{3}$L-32 to 50
(with switch)

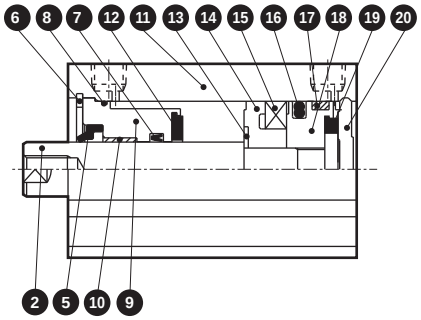

● SSD-KG$^{2}_{3}$L-63 to 100
(with switch)

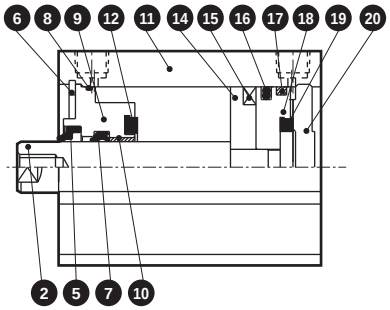

● SSD-KG$^{2}_{3}$-16
(without switch)

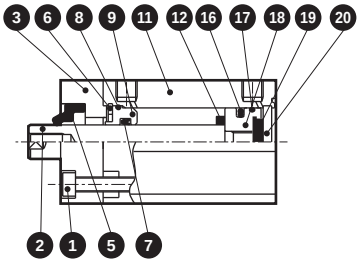

● SSD-KG$^{2}_{3}$-20, 25
(without switch)

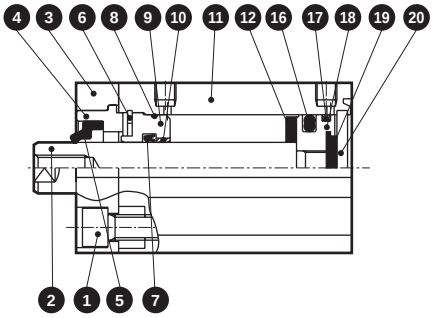

● SSD-KG$^{2}_{3}$-32 to 50
(without switch)

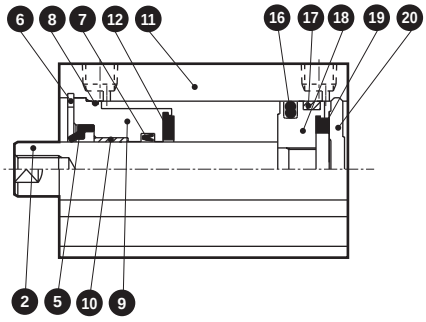

● SSD-KG$^{2}_{3}$-63 to 100
(without switch)

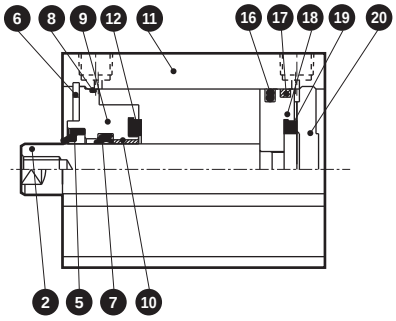

Main parts list

No.	Part name		Material	Remarks
1	Hexagon socket head cap screw		Stainless steel	ø16 to ø25 only
2	Piston rod		Stainless steel	Industrial chrome plating
3	Adaptor (A)		Aluminum alloy	Alumite: ø16 to ø25 only
4	Adaptor (B)		Aluminum alloy	Alumite: ø20/ø25 only
5	Scraper	G2	Nitrile rubber	
		G3	Fluoro rubber	
6	C-snap ring (for hole)		Stainless steel	
7	Rod packing	G2	Nitrile rubber	
		G3	Fluoro rubber	
8	Rod metal gasket	G2	Nitrile rubber	
		G3	Fluoro rubber	
9	Rod metal		Special aluminum	Alumite
10	Bush		Oiles drymet	ø20 to ø100 only

No.	Part name		Material	Remarks
11	Body		Aluminum alloy	Hard alumite
12	Cushion rubber R		Urethane rubber	
13	Spacer washer		Stainless steel	ø16 to ø25 only
14	Spacer		ø16 to ø50: Special resin ø63 to ø100: Aluminum alloy	
15	Magnet		Plastic	
16	Piston packing	G2	Nitrile rubber	
		G3	Fluoro rubber	
17	Wear ring		Polyacetal resin	
18	Piston		Aluminum alloy	Chromate
19	Cushion rubber H		Urethane rubber	
20	Cover		ø16 to ø25: Stainless steel	
			ø32 to ø100: Aluminum alloy	Alumite

Repair parts list

Part name / Bore size (mm)	Kit No.	Repair parts No.
ø16	SSD-KG2-16K	❺ ❼ ❽ ⓬ ⓰ ⓱ ⓳
	SSD-KG3-16K	
ø20	SSD-KG2-20K	
	SSD-KG3-20K	
ø25	SSD-KG2-25K	
	SSD-KG3-25K	
ø32	SSD-KG2-32K	
	SSD-KG3-32K	
ø40	SSD-KG2-40K	
	SSD-KG3-40K	
ø50	SSD-KG2-50K	
	SSD-KG3-50K	
ø63	SSD-KG2-63K	
	SSD-KG3-63K	
ø80	SSD-KG2-80K	
	SSD-KG3-80K	
ø100	SSD-KG2-100K	
	SSD-KG3-100K	

Note: Specify the kit No. when placing an order.

Dimensions

SSD-KG2/KG3

ø16

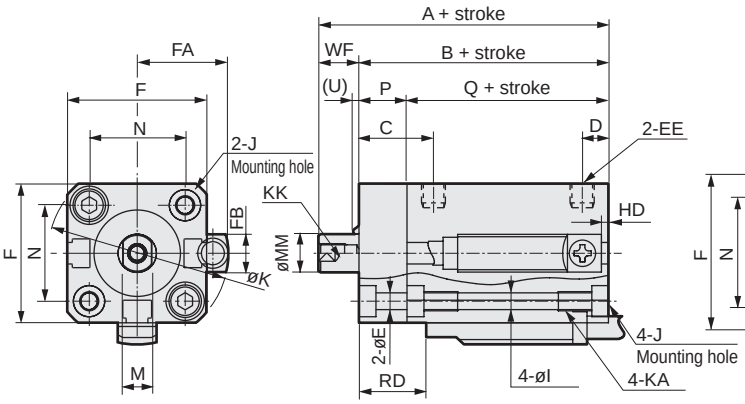

ø20/ø25

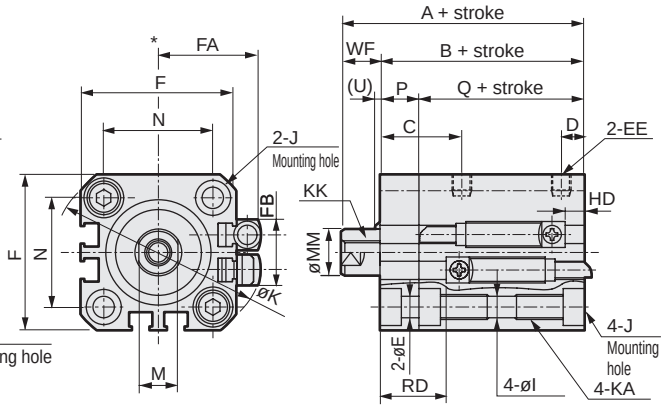

ø32 to ø100

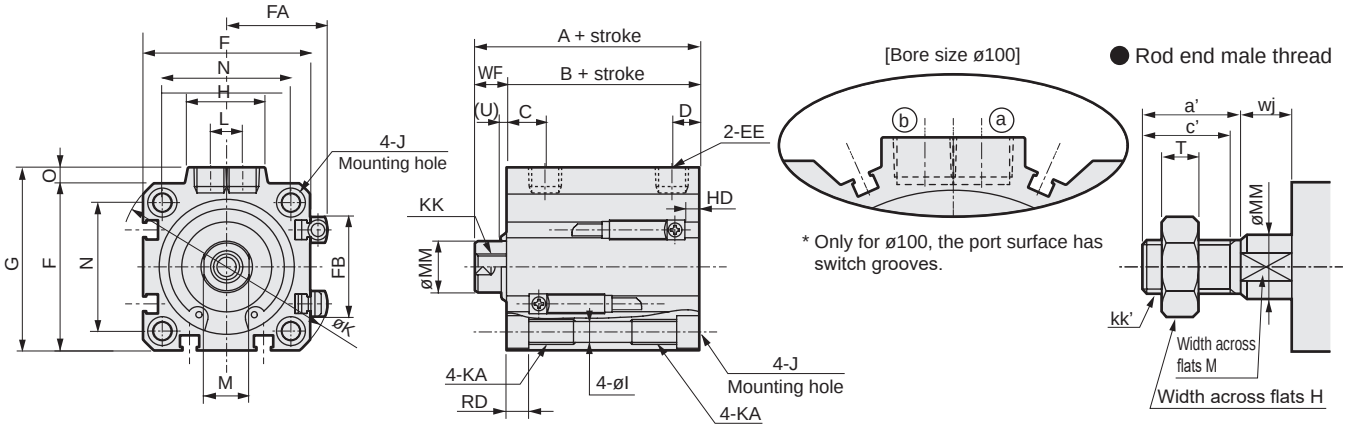

*1: To calculate A+ stroke or B+ stroke when using custom stroke, apply the next longer standard stroke (instead of the custom stroke) to the stroke value. (Example) If the custom stroke is 7 mm, apply the standard stroke of 10 mm.

Code / Bore size (mm)	Dimensions (no switch) A *1	B *1	Q *1	Common dimensions with switch A *1	B *1	Q *1	C	D	E	EE	F	FA	FB	G	H	I	J	K	KA	KK
ø16	40.5	32	22	45.5	37	27	15.5	5.5	3.4	M5	29	20.8	8	-	-	3.5	ø6.5 spot face depth 3.5	38	M4 depth 7	M4 depth 8
ø20	44	34.5	24.5	54	44.5	34.5	18	5.5	5.5	M5	36	24.3	16	-	-	5.5	ø9 spot face depth 5.5	47	M6 depth 11	M5 depth 7
ø25	47.5	37.5	27.5	57.5	47.5	37.5	21	6	5.5	M5	40	26.3	17	-	-	5.5	ø9 spot face depth 5.5	51	M6 depth 11	M6 depth 12
ø32	55	43	-	65	53	-	8	8	5.5	Rc1/8	45	28.8	24	49.5	24	5.5	ø9 spot face depth 5.5	60	M6 depth 11	M8 depth 13
ø40	61.5	49.5	-	71.5	59.5	-	12	8.5	5.5	Rc1/8	52	32.3	31	57	24	5.5	ø9 spot face depth 5.5	69	M6 depth 11	M8 depth 13
ø50	63.5	50.5	-	73.5	60.5	-	10.5	10.5	5.5	Rc1/4	64	38.3	32	71	33	6.9	ø11 spot face depth 6.5	86	M8 depth 13	M10 depth 15
ø63	69	56	-	79	66	-	13	11	5.5	Rc1/4	77	44.8	32	84	33	8.7	ø14 spot face depth 9	103	M10 depth 25	M10 depth 15
ø80	78.5	63.5	-	88.5	73.5	-	16	13	5.5	Rc3/8	98	55.3	32	104	38	10.5	ø17.5 spot face depth 11	132	M12 depth 28	M16 depth 21
ø100	90	73	-	100	83	-	23	15	5.5	Rc3/8	117	64.8	32	123.5	38	10.5	ø17.5 spot face depth 11	156	M12 depth 28	M20 depth 27

Code / Bore size (mm)	Common dimensions with switch L	M	MM	N	O	P	U	WF	Proximity T2YLH, T2YLV, T3YLH, T3YLV HD	RD	Dimensions of rod end male thread part a'	c'	H	kk'	M	MM	T	wj
ø16	-	6	8	20	-	10	3	8.5	2.5	14.5	12	10	10	M6	6	8	3.6	8.5
ø20	-	8	10	25.5	-	10	3	9.5	4.5	20.0	14	12	13	M8	8	10	5	9.5
ø25	-	10	12	28	-	10	3	10	4.5	22.5	17.5	15	17	M10x1.25	10	12	6	10
ø32	10	14	16	34	4.5	-	0	12	9.5	25.5	23.5	20.5	22	M14x1.5	14	16	8	10
ø40	10	14	16	40	5	-	2	12	10.5	31.0	23.5	20.5	22	M14x1.5	14	16	8	10
ø50	15	17	20	50	7	-	2	13	11.5	31.0	28.5	26	27	M18x1.5	17	20	11	10
ø63	15	17	20	60	7	-	2	13	18.0	29.0	28.5	26	27	M18x1.5	17	20	11	10
ø80	15	22	25	77	6	-	2	15	24.0	31.5	35.5	32.5	32	M22x1.5	22	25	13	13
ø100	15	27	30	94	6.5	-	2	17	29.5	35.5	35.5	32.5	41	M26x1.5	27	30	16	13

* For dimensions of individual accessories, refer to pages 1108 to 1115.

MEMO

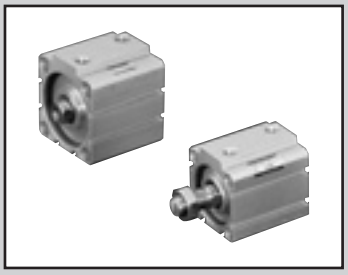

Compact cylinder
Double acting/single rod/coil scraper

SSD-G1 Series

Compact cylinder
Double acting/single rod/anti-spatter adherence

SSD-G4 Series

● Bore size: ø25/ø32/ø40/ø50/ø63/ø80/ø100

JIS symbol

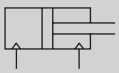

RoHS CAD

Specifications

Item	SSD-G1/G4 SSD-G1L/G4L (with switch)						
Bore size mm	ø25	ø32	ø40	ø50	ø63	ø80	ø100
Actuation	Double acting						
Working fluid	Compressed air						
Max. working pressure MPa	1.0 (≈150 psi, 10 bar)						
Min. working pressure MPa	0.15 (≈22 psi, 1.5 bar)				0.1 (≈15 psi, 1 bar)		
Proof pressure MPa	1.6 (≈230 psi, 16 bar)						
Ambient temperature °C	-10 (14°F) to 60 (140°F) (no freezing)						
Port size	M5	Rc1/8		Rc1/4		Rc3/8	
Stroke tolerance mm	+1.0 0						
Working piston speed mm/s	50 to 500				50 to 300		
Cushion	None						
Lubrication	Not required (use turbine oil class 1 ISO VG32 if necessary for lubrication)						
Allowable absorbed energy J	0.021	0.025	0.092	0.1	0.12	0.27	0.56

Stroke

Bore size (mm)	Standard stroke (mm)	Max. stroke (mm)	Min. stroke (mm)/strong magnetic field proof switch
ø25	5, 10, 15, 20, 25, 30, 40, 50	*2) 50	1 (10) The value in ( ) is for types with one or two switches.
ø32			
ø40			
ø50			
ø63	5, 10, 20, 30, 40, 50	*2) 50	
ø80			
ø100			

*1) The custom stroke is available in 1 mm increments.
*2) If the standard stroke is exceeded, the high load is used. Refer to page 1116 for specifications.
*3) Refer to pages 1320 and 1321 for the min. stroke with mounting brackets LB and LB2.

Switch specifications

Item	2-wire proximity
	T2YD
Applications	Dedicated for programmable controller
Lamp	Red/green LED (Lit when ON)
Load voltage	24 VDC ±10%
Load current	5 to 20 mA
Internal voltage drop	6V or less
Leakage current	1.0 mA or less
Output delay time *1 (ON delay, OFF delay)	60 ms or less
Lead wire length	1 m (oil resistant vinyl cabtyre cable ø 6, 0.5 mm^2 x 2-conductor) *2, *3
Insulation resistance	100 MΩ or more at 500 VDC megger
Withstand voltage	No failure after 1 minute of 1,000 VAC application.
Shock resistance	980 m/s^2
Ambient temperature	-10 to +60°C
Degree of protection	JIS C0920 (water-tight), IEC standards IP67, oil resistance
Weight g	1 m:61 3 m:166 5 m:272

*1 : Indicates the time from magnetic sensor detection of the piston magnet until switch output.
*2 : 3 m and 5 m lead wires are available as options.
*3 : Flame-resistant lead wires are available as options.
*4 : Switch for AC magnetic field (T2YD) cannot be used in DC magnetic field.

Cylinder weight table (the weight of the switches is when there are 2 cylinder switches.)

(Unit: g)

Stroke (mm)	5		10		15		20		25		30		40		50	
Bore size (mm)	No switch	Switch	No switch	Switch	No switch	Switch	No switch	Switch	No switch	Switch	No switch	Switch	No switch	Switch	No switch	Switch
ø25	131	222	146	237	162	253	178	269	194	285	209	300	241	332	272	363
ø32	184	298	206	320	228	342	250	364	271	385	293	407	337	451	380	494
ø40	265	408	292	435	318	461	345	488	372	515	398	541	451	594	504	647
ø50	418	612	460	654	502	696	544	738	586	780	629	823	713	907	797	991
ø63	603	882	658	937	-	-	768	1047	-	-	878	1157	989	1268	1099	1378
ø80	1093	1506	1180	1593	-	-	1353	1766	-	-	1526	1939	1700	2113	1873	2286
ø100	1654	2221	1768	2335	-	-	1995	2562	-	-	2223	2790	2450	3017	2678	3245

Theoretical thrust table

(Unit: N)

Bore size (mm)	Operating direction	Working pressure MPa										
		0.1	0.15	0.2	0.3	0.4	0.5	0.6	0.7	0.8	0.9	1.0
ø25	Push	-	73.6	98.2	$1.47x10^2$	$1.96x10^2$	$2.45x10^2$	$2.95x10^2$	$3.44x10^2$	$3.93x10^2$	$4.42x10^2$	$4.91x10^2$
	Pull	-	56.7	75.6	$1.13x10^2$	$1.51x10^2$	$1.89x10^2$	$2.27x10^2$	$2.64x10^2$	$3.02x10^2$	$3.40x10^2$	$3.78x10^2$
ø32	Push	-	$1.21x10^2$	$1.61x10^2$	$2.41x10^2$	$3.22x10^2$	$4.02x10^2$	$4.83x10^2$	$5.63x10^2$	$6.43x10^2$	$7.24x10^2$	$8.04x10^2$
	Pull	-	90.5	$1.21x10^2$	$1.81x10^2$	$2.41x10^2$	$3.02x10^2$	$3.62x10^2$	$4.22x10^2$	$4.83x10^2$	$5.43x10^2$	$6.03x10^2$
ø40	Push	-	$1.88x10^2$	$2.51x10^2$	$3.77x10^2$	$5.03x10^2$	$6.28x10^2$	$7.54x10^2$	$8.80x10^2$	$1.01x10^3$	$1.13x10^3$	$1.26x10^3$
	Pull	-	$1.58x10^2$	$2.11x10^2$	$3.17x10^2$	$4.22x10^2$	$5.28x10^2$	$6.33x10^2$	$7.39x10^2$	$8.44x10^2$	$9.50x10^2$	$1.06x10^3$
ø50	Push	-	$2.95x10^2$	$3.93x10^2$	$5.89x10^2$	$7.85x10^2$	$9.82x10^2$	$1.18x10^3$	$1.37x10^3$	$1.57x10^3$	$1.77x10^3$	$1.96x10^3$
	Pull	-	$2.47x10^2$	$3.30x10^2$	$4.95x10^2$	$6.60x10^2$	$8.25x10^2$	$9.90x10^2$	$1.15x10^3$	$1.32x10^3$	$1.48x10^3$	$1.65x10^3$
ø63	Push	$3.12x10^2$	$4.68x10^2$	$6.23x10^2$	$9.35x10^2$	$1.25x10^3$	$1.56x10^3$	$1.87x10^3$	$2.18x10^3$	$2.49x10^3$	$2.81x10^3$	$3.12x10^3$
	Pull	$2.80x10^2$	$4.20x10^2$	$5.61x10^2$	$8.41x10^2$	$1.12x10^3$	$1.40x10^3$	$1.68x10^3$	$1.96x10^3$	$2.24x10^3$	$2.52x10^3$	$2.80x10^3$
ø80	Push	$5.03x10^2$	$7.54x10^2$	$1.01x10^3$	$1.51x10^3$	$2.01x10^3$	$2.51x10^3$	$3.02x10^3$	$3.52x10^3$	$4.02x10^3$	$4.52x10^3$	$5.03x10^3$
	Pull	$4.54x10^2$	$6.80x10^2$	$9.07x10^2$	$1.36x10^3$	$1.81x10^3$	$2.27x10^3$	$2.72x10^3$	$3.17x10^3$	$3.63x10^3$	$4.08x10^3$	$4.54x10^3$
ø100	Push	$7.85x10^2$	$1.18x10^3$	$1.57x10^3$	$2.36x10^3$	$3.14x10^3$	$3.93x10^3$	$4.71x10^3$	$5.50x10^3$	$6.28x10^3$	$7.07x10^3$	$7.85x10^3$
	Pull	$7.15x10^2$	$1.07x10^3$	$1.43x10^3$	$2.14x10^3$	$2.86x10^3$	$3.57x10^3$	$4.29x10^3$	$5.00x10^3$	$5.72x10^3$	$6.43x10^3$	$7.15x10^3$

How to order

No switch (without magnet for switch)

SSD-G4 - 32 - 10 ——— N - LB - I

With switch (built-in magnet for switch)

SSD-G4L - 32 - 10 - T2YD - R - N - LB - I

Ⓐ Model No.

Ⓑ Bore size

Ⓒ Stroke *1

Ⓓ Switch model No. *4

Ⓔ Switch quantity

Ⓕ Option

Ⓖ Mounting bracket *1 *2

Ⓗ Accessory *3

Code	Description
Ⓐ Model No.	
SSD-G1	Double acting/single rod/coil scraper
SSD-G1L	Double acting/single rod/coil scraper/with switch
SSD-G4	Double acting/single rod/anti-spatter adherence
SSD-G4L	Double acting/single rod/anti-spatter adherence/with switch
Ⓑ Bore size (mm)	
25	ø25
32	ø32
40	ø40
50	ø50
63	ø63
80	ø80
100	ø100
Ⓒ Stroke (mm)	
Refer to the stroke table on the following page.	

Ⓓ Switch model No.

Axial lead wire	Radial lead wire	Contact	Voltage	Indicator	Lead wire
T2YD*	—	Proximity	DC	2-color LED AC magnetic field	2-wire
T2YDT*	—				

*** Lead wire length**	
Blank	1 m (standard)
3	3 m (option)
5	5 m (option)

Ⓔ Switch quantity	
R	1 on rod side
H	1 on head side
D	2
Ⓕ Option	
Blank	Rod end female thread
N	Rod end male thread
Ⓖ Mounting bracket	
LB	Axial foot
LB2	Axial foot (compact)
CB	Clevis bracket (pin and snap ring included)
CB2	Clevis bracket (compact) (pin and snap ring included)
FA	Rod side flange
FB	Head side flange
Ⓗ Accessory (available when rod end male thread "N" is selected)	
I	Rod eye
I2	Rod eye (compact)
Y	Rod clevis (pin and snap ring included)
Y2	Rod clevis (compact) (pin and snap ring included)

⚠ Precautions for model No. selection

*1 : The mounting bracket is included at shipment.
*2 : The projection dimension of piston rod WF when LB2 or FA is selected is different from that of the standard. Refer to the dimensions on pages 1109 and 1110. The number of the specified protruding dimension will be added at the end of the model No. printed on the metal plate on the body.
*3 : "I" and "Y" cannot be selected together.
*4 : Switches are shipped with the product. Contact CKD if assembling before shipment is necessary.

[Example of model No.]

SSD-G4L-32-10-T2YD-R-N

Model: Compact cylinder double acting/anti-spatter adherence

Ⓑ Bore size : ø32 mm
Ⓒ Stroke :10 mm
Ⓓ Switch model No. : Proximity switch for AC magnetic field T2YD
· Lead wire length 1 m
Ⓔ Switch quantity : 1 on rod side
Ⓕ Option : Rod end male thread

How to order switch

SW - T2YD*

Switch model No.
(Item Ⓓ on page 1248)

[Stroke table]

Stroke (mm)		Applicable bore size						
		ø25	ø32	ø40	ø50	ø63	ø80	ø100
Standard stroke *1	5	●	●	●	●	●	●	●
	10	●	●	●	●	●	●	●
	15	●	●	●	●			
	20	●	●	●	●	●	●	●
	25	●	●	●	●			
	30	●	●	●	●	●	●	●
	40	●	●	●	●	●	●	●
	50	●	●	●	●	●	●	●
Min. stroke (mm) *2		1						
Max. stroke (mm)		50						
Custom stroke *3		In 1 mm increments						

*1 : If the standard stroke is exceeded, the high load (K) is used.
Refer to page 1116 for specifications, and pages 1122 to 1125 for dimensions.
*2 : Less than 10 mm stroke with AC magnetic field proof switch is not available.
*3 : The total length is the same as that of the next longer standard stroke.
*4 : Refer to pages 1320 and 1321 for the min. stroke with mounting brackets LB and LB2.

How to order mounting bracket

Bore size (mm) / Mounting bracket	ø25	ø32	ø40	ø50	ø63	ø80	ø100
Foot (LB)	SSD-LB-25	SSD-LB-32	SSD-LB-40	SSD-LB-50	SSD-LB-63	SSD-LB-80	SSD-LB-100
Foot (LB2)	SSD-LB2-25	SSD-LB2-32	SSD-LB2-40	SSD-LB2-50	SSD-LB2-63	SSD-LB2-80	SSD-LB2-100
Flange (FA/FB)	SSD-FA-25	SSD-FA-32	SSD-FA-40	SSD-FA-50	SSD-FA-63	SSD-FA-80	SSD-FA-100
Clevis bracket (CB)	SSD-CB-25	SSD-CB-32	SSD-CB-40	SSD-CB-50	SSD-CB-63	SSD-CB-80	SSD-CB-100
Clevis bracket (CB2)	SSD-CB2-25	SSD-CB2-32	SSD-CB2-40	SSD-CB2-50	SSD-CB2-63	SSD-CB2-80	SSD-CB2-100

*1: The foot mounting bracket is provided as 2 pcs./set.

Internal structure and parts list

● SSD-G1L/G4L-25 (double acting/anti-spatter adherence/ with switch)

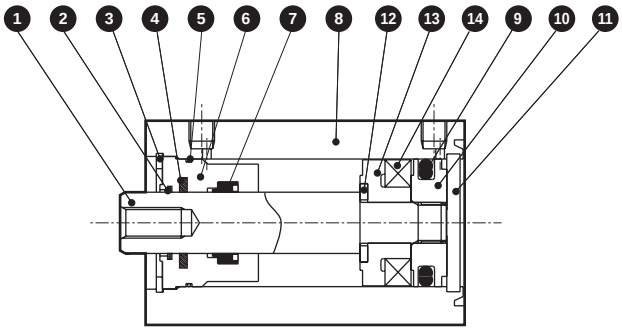

● SSD-G1L/G4L-32 to 50 (double acting/anti-spatter adherence/ with switch)

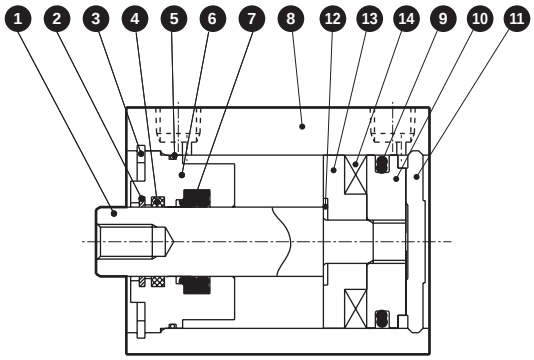

● SSD-G1/G4-25 (double acting/anti-spatter adherence)

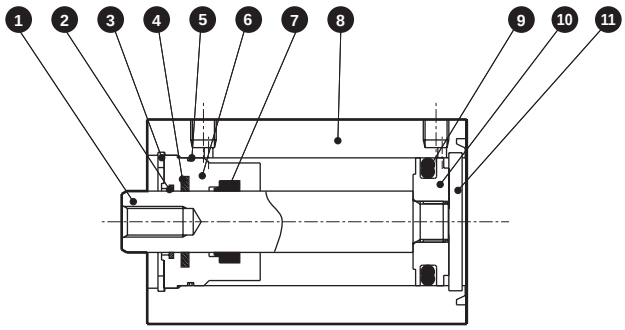

● SSD-G1/G4-32 to 50 (double acting/anti-spatter adherence)

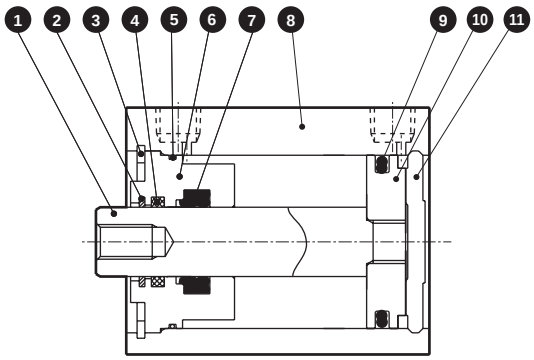

No.	Part name	Material	Remarks	No.	Part name	Material	Remarks
1	Piston rod	ø25: Stainless steel, ø32 to ø50: Steel	Industrial chrome plating	8	Tube body	Aluminum alloy	Hard alumite
				9	Piston packing	Nitrile rubber	
2	Coil scraper	Phosphor bronze		10	Piston	Aluminum alloy	Chromate
3	C-snap ring for hole	Steel	Zinc phosphate	11	Cover	ø25: Stainless steel ø32 to ø50: Aluminum alloy	Alumite (ø32 to 50)
4	Lube keeping structure	Special rubber	G4 only				
5	Rod metal gasket	Nitrile rubber		12	Spacer washer	Stainless steel	
6	Rod metal	Special aluminum	Alumite	13	Spacer	Special resin	
7	Rod packing	Nitrile rubber		14	Magnet	Plastic	

Repair parts list

Part name / Bore size (mm)	Kit No.	Repair parts No.
ø25	SSD-G1-25K	❷ ❺ ❼ ❾
ø32	SSD-G1-32K	
ø40	SSD-G1-40K	
ø50	SSD-G1-50K	

Internal structure and parts list

● SSD-G1L/G4L-63 to 100 (double acting/anti-spatter adherence/with switch)

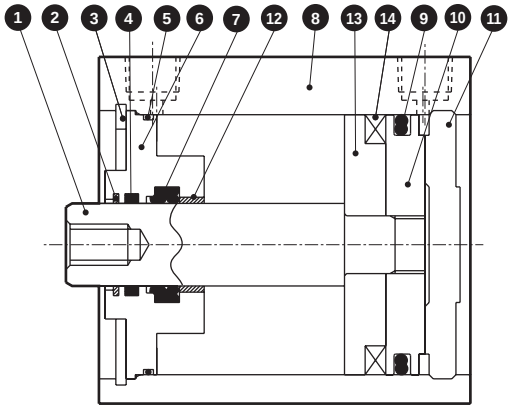

● SSD-G1/G4-63 to 100 (double acting/anti-spatter adherence)

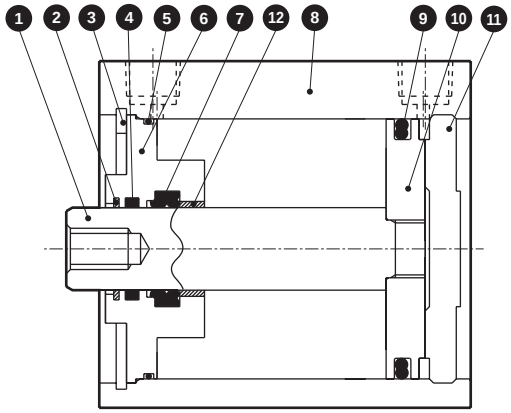

No.	Part name	Material	Remarks	No.	Part name	Material	Remarks
1	Piston rod	Steel	Industrial chrome plating	8	Tube body	Aluminum alloy	Hard alumite
2	Coil scraper	Phosphor bronze		9	Piston packing	Nitrile rubber	
3	C-snap ring for hole	Steel	Zinc phosphate	10	Piston	Aluminum alloy	Chromate
4	Lube keeping structure	Special rubber	G4 only	11	Cover	Aluminum alloy	Alumite
5	Rod metal gasket	Nitrile rubber		12	Bush	Oiles drymet	
6	Rod metal	Aluminum alloy		13	Spacer	Aluminum alloy	Chromate
7	Rod packing	Nitrile rubber	Chromate	14	Magnet	Plastic	

Repair parts list

Part name / Bore size (mm)	Kit No.	Repair parts No.
ø63	SSD-G1-63K	❷ ❺ ❼ ❾
ø80	SSD-G1-80K	
ø100	SSD-G1-100K	

SCP*3
CMK2
CMA2
SCM
SCG
SCA2
SCS2
CKV2
CAV2/COVP/N2
SSD2
SSG
SSD
CAT
MDC2
MVC
SMG
MSD/MSDG
FC*
STK
SRL3
SRG3
SRM3
SRT3
MRL2
MRG2
SM-25
ShkAbs
FJ
FK
Spd Contr
Ending

Dimensions

● SSD-G1L/G4L-25 (with switch)

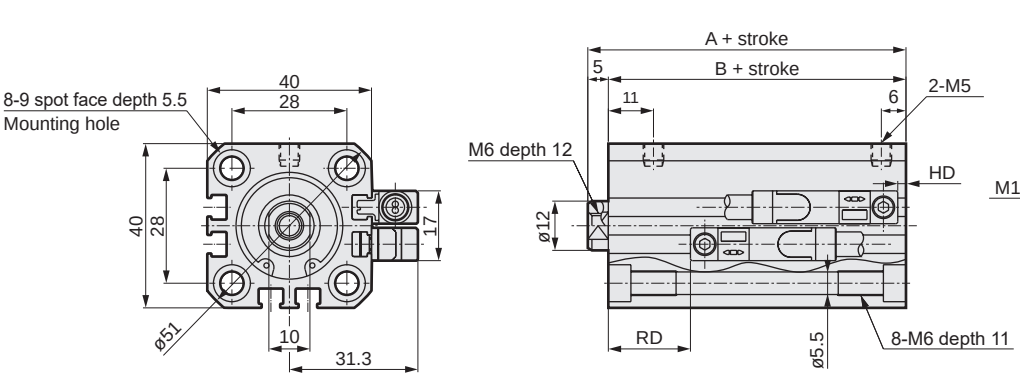

● Rod end male thread

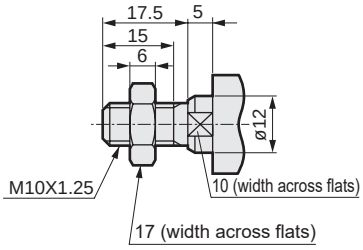

● SSD-G1/G4-25 (without switch)

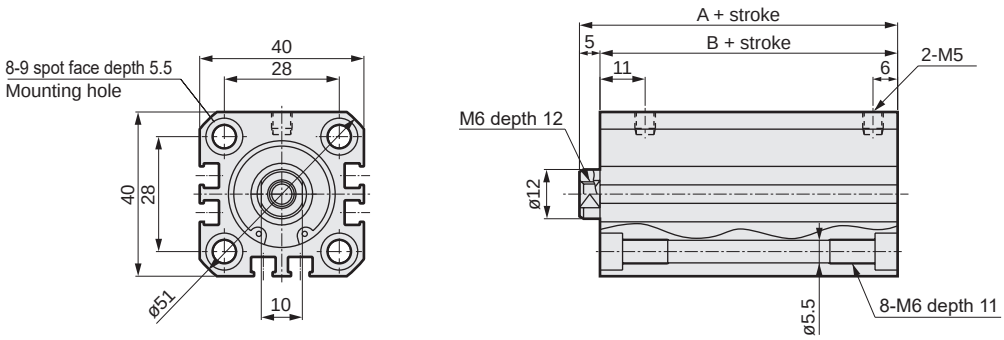

Code	No switch		Dimensions with switch			
Bore size (mm)	A *1	B *1	A *1	B *1	RD *2	HD
ø25	37.5	32.5	47.5	42.5	20	2

*1 : To calculate A+ stroke or B+ stroke when using custom stroke, apply the next longer standard stroke (instead of the custom stroke) to the stroke value. (Example) If the custom stroke is 17 mm, apply the standard stroke 20 mm.
*2 : RD dimensions for custom stroke differ from these dimensions according to the setting.
*3 : For dimensions of individual accessories, refer to pages 1108 to 1115.

Dimensions

● SSD-G1L/G4L-32 to 100 (with switch)

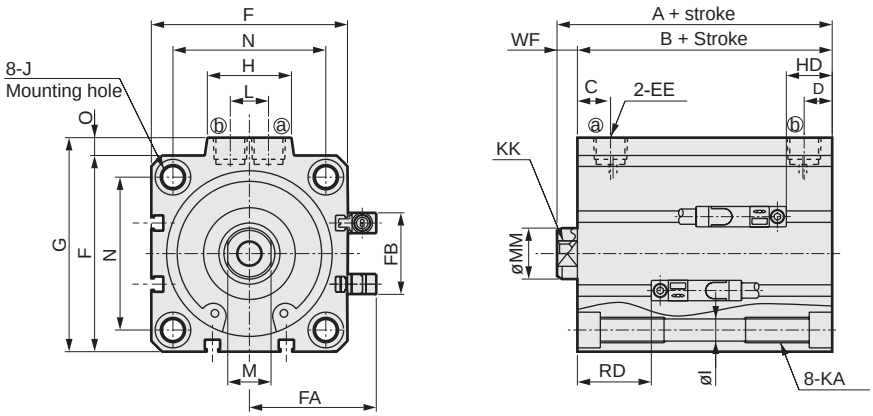

● Rod end male thread

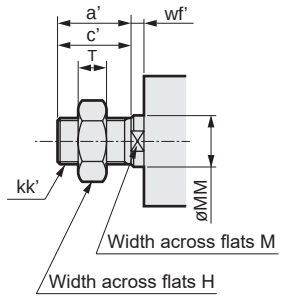

● SSD-G1/G4-32 to 100 (without switch)

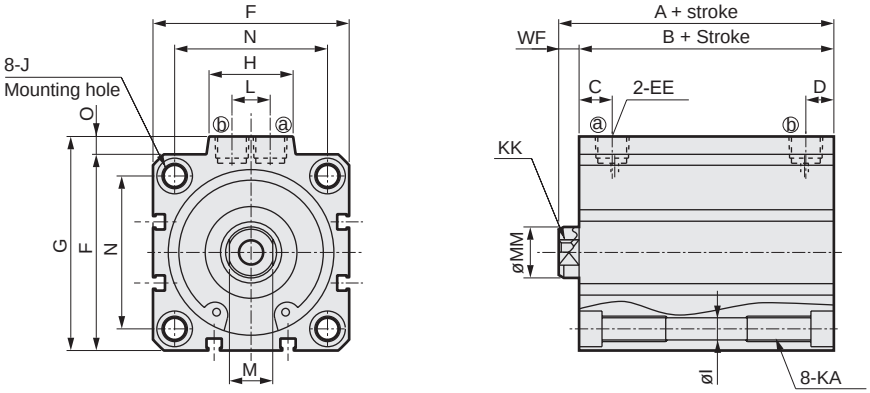

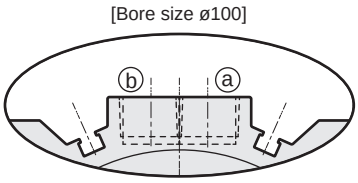

* Only for ø100, the port surface has switch grooves.

Code / Bore size (mm)	No switch A *1	No switch B *1	Common dimensions with switch A *1	B *1	C	D	EE	F	FA	FB	G	H	I	J	KA	KK
ø32	40	33	50	43	8	8	Rc1/8	45	33.8	24	49.5	24	5.5	9 spot face depth 5.5	M6 depth 11	M8 depth 13
ø40	46.5	39.5	56.5	49.5	12	8.5	Rc1/8	52	37.3	31	57	24	5.5	9 spot face depth 5.5	M6 depth 11	M8 depth 13
ø50	48.5	40.5	58.5	50.5	10.5	10.5	Rc1/4	64	43.3	32	71	33	6.9	11 spot face depth 6.5	M8 depth 13	M10 depth 15
ø63	54	46	64	56	13	11	Rc1/4	77	49.8	32	84	33	8.7	14 spot face depth 9	M10 depth 25	M10 depth 15
ø80	63.5	53.5	73.5	63.5	16	13	Rc3/8	98	60.3	32	104	38	10.5	17.5 spot face depth 11	M12 depth 28	M16 depth 21
ø100	75	63	85	73	23	15	Rc3/8	117	69.8	32	123.5	38	10.5	17.5 spot face depth 11	M12 depth 28	M20 depth 27

Code / Bore size (mm)	Common dimensions with switch M	MM	N	O	WF	With T2YD type switch RD *2	HD
ø32	14	16	34	4.5	7	17.5	2
ø40	14	16	40	5	7	20.5	5.5
ø50	17	20	50	7	8	21	6
ø63	17	20	60	7	8	21.5	11
ø80	22	25	77	6	10	24	16
ø100	27	30	94	6.5	12	28	21.5

*1 : To calculate A+ stroke or B+ stroke when using custom stroke, apply the next longer standard stroke (instead of the custom stroke) to the stroke value.
(Example) If the custom stroke is 17 mm, apply the standard stroke 20 mm.

*2 : RD dimensions for custom stroke differ from these dimensions according to the setting.

● Dimensions of rod end male thread part

Code / Bore size (mm)	a'	C'	H	kk'	M	MM	T	wf'
ø32	23.5	20.5	22	M14x1.5	14	16	8	5
ø40	23.5	20.5	22	M14x1.5	14	16	8	5
ø50	28.5	26	27	M18x1.5	17	20	11	5
ø63	28.5	26	27	M18x1.5	17	20	11	5
ø80	35.5	32.5	32	M22x1.5	22	25	13	8
ø100	35.5	32.5	41	M26x1.5	27	30	16	8

For dimensions of individual accessories, refer to pages 1108 to 1115.

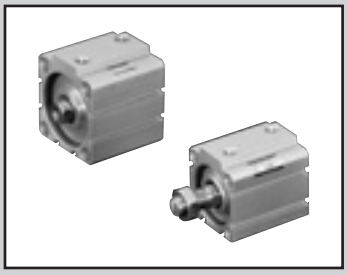

Compact cylinder
Double acting/single rod/high load/coil scraper

SSD-KG1 Series

Compact cylinder
Double acting/single rod/high load/anti-spatter adherence

SSD-KG4 Series

● Bore size: ø25/ø32/ø40/ø50/ø63/ø80/ø100

JIS symbol

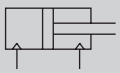

RoHS CAD

Specifications

Item	SSD-KG1/KG4 SSD-KG1L/KG4L (with switch)						
Bore size mm	ø25	ø32	ø40	ø50	ø63	ø80	ø100
Actuation	Double acting						
Working fluid	Compressed air						
Max. working pressure MPa	1.0 (≈150 psi, 10 bar)						
Min. working pressure MPa	0.15 (≈22 psi, 1.5 bar)				0.1 (≈15 psi, 1 bar)		
Proof pressure MPa	1.6 (≈230 psi, 16 bar)						
Ambient temperature °C	-10 (14°F) to 60 (140°F) (no freezing)						
Port size	M5	Rc1/8		Rc1/4		Rc3/8	
Stroke tolerance mm	+2.0 0						
Working piston speed mm/s	50 to 500				50 to 300		
Cushion	Rubber cushion						
Lubrication	Not required (use turbine oil ISO VG32 if necessary for lubrication)						
Allowable absorbed energy J	0.16	0.40	0.63	0.98	1.56	2.51	3.92

Stroke

Bore size (mm)	Standard stroke (mm)	Max. stroke (mm)	Min. stroke (mm)/strong magnetic field proof switch
ø25	10, 15, 20, 25, 30, 40 50, 60, 70, 80, 90, 100	*2) 300	1(10)
ø32			
ø40			
ø50			
ø63	10, 20, 30, 40, 50 60, 70, 80, 90, 100		
ø80			
ø100			

*1) The custom stroke is available in 1 mm increments.
*2) Stroke over standard to maximum is available in increments of 10.
(Example) ø25: 110, 120, 130, 140, 150…
*3) Dimensions of custom stroke (Example: 64 mm stroke) are the same as the next stroke up (Example: 70 mm stroke).
*4) From 151 to 300 for ø25 to ø50, or 201 to 300 for ø63 to ø100, internal structure and total length are different in some products.

Switch specifications

Item	2-wire proximity T2YD
Applications	Dedicated for programmable controller
Lamp	Red/green LED (Lit when ON)
Load voltage	24 VDC ±10%
Load current	5 to 20 mA
Internal voltage drop	6V or less
Leakage current	1.0 mA or less
Output delay time *1 (ON delay, OFF delay)	60 ms or less
Lead wire length	1 m (oil resistant vinyl cabtyre cable ø 6, 0.5 mm^2 x 2-conductor) *2, *3
Insulation resistance	100 MΩ or more at 500 VDC megger
Withstand voltage	No failure after 1 minute of 1,000 VAC application.
Shock resistance	980 m/s^2
Ambient temperature	-10 to +60°C
Degree of protection	JIS C0920 (water-tight), IEC standards IP67, oil resistance
Weight g	1 m:61 3 m:166 5 m:272

*1: Indicates the time from magnetic sensor detection of the piston magnet until switch output.
*2: 3 m and 5 m lead wires are available as options.
*3: Flame-resistant lead wires are available as options.
*4: Switch for AC magnetic field (T2YD) cannot be used in DC magnetic field.

Cylinder weight table (the weight of the switches is when there are 2 cylinder switches.)

(Unit: g)

Stroke (mm)	10		15		20		25		30		40		50		60		70		80		90		100	
Bore size (mm)	No switch	Switch	No switch	Switch	No switch	Switch	No switch	Switch	No switch	Switch	No switch	Switch	No switch	Switch	No switch	Switch	No switch	Switch	No switch	Switch	No switch	Switch	No switch	Switch
ø25	162	253	178	269	194	285	209	300	226	317	258	349	290	381	322	413	354	445	386	477	418	509	450	541
ø32	249	363	270	384	292	406	314	428	336	450	379	493	422	536	465	579	508	622	551	665	594	708	637	751
ø40	345	488	372	515	398	541	424	567	451	594	504	647	557	700	610	753	663	806	716	859	769	912	822	965
ø50	549	743	591	785	634	828	677	871	718	912	802	996	886	1080	970	1164	1054	1248	1138	1332	1222	1416	1306	1500
ø63	782	1061	-	-	892	1171	-	-	1003	1282	1113	1392	1223	1502	1333	1612	1443	1722	1553	1832	1663	1942	1773	2052
ø80	1382	1795	-	-	1555	1968	-	-	1729	2142	1902	2315	2075	2488	2248	2661	2421	2834	2594	3007	2767	3180	2940	3353
ø100	2029	2596	-	-	2257	2824	-	-	2484	3051	2712	3279	2940	3507	3168	3735	3396	3963	3624	4191	3852	4419	4080	4647

(Unit: g)

Stroke (mm)	110		120		130		140		150		160		170		180		190		200	
Bore size (mm)	No switch	Switch	No switch	Switch	No switch	Switch	No switch	Switch	No switch	Switch	No switch	Switch	No switch	Switch	No switch	Switch	No switch	Switch	No switch	Switch
ø25	482	573	514	605	546	637	578	669	610	701	642	733	674	765	706	797	738	829	770	861
ø32	680	794	723	837	766	880	809	923	852	966	894	1008	937	1051	980	1094	1023	1137	1066	1180
ø40	875	1018	928	1071	981	1124	1034	1177	1087	1230	1140	1283	1193	1336	1246	1389	1299	1442	1352	1495
ø50	1390	1584	1474	1668	1558	1752	1642	1836	1726	1920	1824	2018	1909	2103	1994	2188	2079	2273	2164	2358
ø63	1883	2162	1993	2272	2103	2382	2213	2492	2323	2602	2433	2712	2543	2822	2653	2932	2763	3042	2873	3152
ø80	3113	3526	3286	3699	3459	3872	3632	4045	3805	4218	3978	4391	4151	4564	4324	4737	4497	4910	4670	5083
ø100	4308	4875	4536	5103	4764	5331	4992	5559	5220	5787	5448	6015	5676	6243	5904	6471	6132	6699	6360	6927

(Unit: g)

Stroke (mm)	210		220		230		240		250		260		270		280		290		300	
Bore size (mm)	No switch	Switch	No switch	Switch	No switch	Switch	No switch	Switch	No switch	Switch	No switch	Switch	No switch	Switch	No switch	Switch	No switch	Switch	No switch	Switch
ø25	813	893	845	925	877	957	909	989	941	1021	973	1053	1005	1085	1037	1117	1069	1149	1101	1181
ø32	1109	1223	1152	1266	1195	1309	1238	1352	1281	1395	1324	1438	1367	1481	1410	1524	1453	1567	1496	1610
ø40	1405	1548	1458	1601	1511	1654	1564	1707	1617	1760	1670	1813	1723	1866	1776	1919	1829	1972	1882	2025
ø50	2249	2443	2334	2528	2419	2613	2504	2698	2589	2783	2674	2868	2759	2953	2844	3038	2929	3123	3014	3208
ø63	2982	3261	3092	3371	3202	3481	3312	3591	3422	3701	3532	3811	3642	3921	3752	4031	3862	4141	3972	4251
ø80	4842	5255	5015	5428	5188	5601	5361	5774	5534	5947	5707	6120	5880	6293	6053	6466	6226	6639	6399	6812
ø100	6589	7156	6817	7384	7045	7612	7273	7840	7501	8068	7729	8296	7957	8524	8185	8752	8413	8980	8641	9208

Theoretical thrust table

(Unit: N)

Bore size (mm)	Operating direction	Working pressure MPa										
		0.1	0.15	0.2	0.3	0.4	0.5	0.6	0.7	0.8	0.9	1.0
ø25	Push	-	73.6	98.2	$1.47x10^2$	$1.96x10^2$	$2.45x10^2$	$2.95x10^2$	$3.44x10^2$	$3.93x10^2$	$4.42x10^2$	$4.91x10^2$
	Pull	-	56.7	75.6	$1.13x10^2$	$1.51x10^2$	$1.89x10^2$	$2.27x10^2$	$2.64x10^2$	$3.02x10^2$	$3.40x10^2$	$3.78x10^2$
ø32	Push	-	$1.21x10^2$	$1.61x10^2$	$2.41x10^2$	$3.22x10^2$	$4.02x10^2$	$4.83x10^2$	$5.63x10^2$	$6.43x10^2$	$7.24x10^2$	$8.04x10^2$
	Pull	-	90.5	$1.21x10^2$	$1.81x10^2$	$2.41x10^2$	$3.02x10^2$	$3.62x10^2$	$4.22x10^2$	$4.83x10^2$	$5.43x10^2$	$6.03x10^2$
ø40	Push	-	$1.88x10^2$	$2.51x10^2$	$3.77x10^2$	$5.03x10^2$	$6.28x10^2$	$7.54x10^2$	$8.80x10^2$	$1.01x10^3$	$1.13x10^3$	$1.26x10^3$
	Pull	-	$1.58x10^2$	$2.11x10^2$	$3.17x10^2$	$4.22x10^2$	$5.28x10^2$	$6.33x10^2$	$7.39x10^2$	$8.44x10^2$	$9.50x10^2$	$1.06x10^3$
ø50	Push	-	$2.95x10^2$	$3.93x10^2$	$5.89x10^2$	$7.85x10^2$	$9.82x10^2$	$1.18x10^3$	$1.37x10^3$	$1.57x10^3$	$1.77x10^3$	$1.96x10^3$
	Pull	-	$2.47x10^2$	$3.30x10^2$	$4.95x10^2$	$6.60x10^2$	$8.25x10^2$	$9.90x10^2$	$1.15x10^3$	$1.32x10^3$	$1.48x10^3$	$1.65x10^3$
ø63	Push	$3.12x10^2$	$4.68x10^2$	$6.23x10^2$	$9.35x10^2$	$1.25x10^3$	$1.56x10^3$	$1.87x10^3$	$2.18x10^3$	$2.49x10^3$	$2.81x10^3$	$3.12x10^3$
	Pull	$2.80x10^2$	$4.20x10^2$	$5.61x10^2$	$8.41x10^2$	$1.12x10^3$	$1.40x10^3$	$1.68x10^3$	$1.96x10^3$	$2.24x10^3$	$2.52x10^3$	$2.80x10^3$
ø80	Push	$5.03x10^2$	$7.54x10^2$	$1.01x10^3$	$1.51x10^3$	$2.01x10^3$	$2.51x10^3$	$3.02x10^3$	$3.52x10^3$	$4.02x10^3$	$4.52x10^3$	$5.03x10^3$
	Pull	$4.54x10^2$	$6.80x10^2$	$9.07x10^2$	$1.36x10^3$	$1.81x10^3$	$2.27x10^3$	$2.72x10^3$	$3.17x10^3$	$3.63x10^3$	$4.08x10^3$	$4.54x10^3$
ø100	Push	$7.85x10^2$	$1.18x10^3$	$1.57x10^3$	$2.36x10^3$	$3.14x10^3$	$3.93x10^3$	$4.71x10^3$	$5.50x10^3$	$6.28x10^3$	$7.07x10^3$	$7.85x10^3$
	Pull	$7.15x10^2$	$1.07x10^3$	$1.43x10^3$	$2.14x10^3$	$2.86x10^3$	$3.57x10^3$	$4.29x10^3$	$5.00x10^3$	$5.72x10^3$	$6.43x10^3$	$7.15x10^3$

How to order

No switch (without magnet for switch)

SSD-KG4 – 32 - 10 ———— N - LB - I

With switch (built-in magnet for switch)

SSD-KG4L - 32 - 10 - T2YD - R - N - LB - I

Ⓐ Model No.

Ⓑ Bore size

Ⓒ Stroke

Ⓓ Switch model No. *4

Ⓔ Switch quantity

Ⓕ Option

Ⓖ Mounting bracket *1 *2

Ⓗ Accessory *3

Code	Description
Ⓐ Model No.	
SSD-KG1	Double acting/single rod/high load/coil scraper
SSD-KG1L	Double acting/single rod/high load/coil scraper/with switch
SSD-KG4	Double acting/single rod/high load/anti-spatter adherence
SSD-KG4L	Double acting/single rod/high load/anti-spatter adherence/with switch

Code	Description
Ⓑ Bore size (mm)	
25	ø25
32	ø32
40	ø40
50	ø50
63	ø63
80	ø80
100	ø100

Ⓒ Stroke (mm)

Refer to the stroke table on the following page.

Ⓓ Switch model No.

Axial lead wire	Radial lead wire	Contact	Voltage	Indicator	Lead wire
T2YD*	—	Proximity	DC	2-color LED AC magnetic field	2-wire
T2YDT*	—				

* Lead wire length	
Blank	1 m (standard)
3	3 m (option)
5	5 m (option)

Ⓔ Switch quantity	
R	1 on rod side
H	1 on head side
D	2

Ⓕ Option	
Blank	Rod end female thread
N	Rod end male thread

Ⓖ Mounting bracket	
LB	Axial foot
LB2	Axial foot (compact)
CB	Clevis bracket (pin and snap ring included)
CB2	Clevis bracket (compact) (pin and snap ring included)
FA	Rod side flange
FB	Head side flange

Ⓗ Accessory (available when rod end male thread "N" is selected)	
I	Rod eye
I2	Rod eye (compact)
Y	Rod clevis (pin and snap ring included)
Y2	Rod clevis (compact) (pin and snap ring included)

⚠ Precautions for model No. selection

*1 : The mounting bracket is included at shipment.
*2 : The projection dimension of piston rod WF when LB2 or FA is selected is different from that of the standard. Refer to the dimensions on pages 1109 and 1110. The number of the specified protruding dimension will be added at the end of the model No. printed on the metal plate on the body.
*3 : "I" and "Y" cannot be selected together.
*4 : Switches are shipped with the product. Contact CKD if assembling before shipment is necessary.

[Example of model No.]

SSD-KG4L-32-10-T2YD-R-N

Model: Compact cylinder
Double acting, high load, anti-spatter adherence

Ⓑ Bore size : ø32 mm
Ⓒ Stroke : 10 mm
Ⓓ Switch model No. : Proximity switch for AC magnetic field T2YD
· Lead wire length 1 m
Ⓔ Switch quantity : 1 on rod side
Ⓕ Option : Rod end male thread

How to order switch

SW - **T2YD**

Switch model No.
(Item Ⓓ on page 1256)

[Stroke table]

Stroke (mm)		Applicable bore size						
		ø25	ø32	ø40	ø50	ø63	ø80	ø100
Standard stroke	10	●	●	●	●	●	●	●
	15	●	●	●	●			
	20	●	●	●	●	●	●	●
	25	●	●	●	●			
	30	●	●	●	●	●	●	●
	40	●	●	●	●	●	●	●
	50	●	●	●	●	●	●	●
	60	●	●	●	●	●	●	●
	70	●	●	●	●	●	●	●
	80	●	●	●	●	●	●	●
	90	●	●	●	●	●	●	●
	100	●	●	●	●	●	●	●
Min. stroke (mm) *1		1						
Max. stroke (mm)		300						
Custom stroke *2		In 1 mm increments						

*1 : Less than 10 mm stroke with AC magnetic field proof switch is not available.
*2 : The total length is the same as that of the next longer standard stroke.

How to order mounting bracket

Bore size (mm) / Mounting bracket	ø25	ø32	ø40	ø50	ø63	ø80	ø100
Foot (LB)	SSD-LB-25	SSD-LB-32	SSD-LB-40	SSD-LB-50	SSD-LB-63	SSD-LB-80	SSD-LB-100
Foot (LB2)	SSD-LB2-25	SSD-LB2-32	SSD-LB2-40	SSD-LB2-50	SSD-LB2-63	SSD-LB2-80	SSD-LB2-100
Flange (FA/FB)	SSD-FA-25	SSD-FA-32	SSD-FA-40	SSD-FA-50	SSD-FA-63	SSD-FA-80	SSD-FA-100
Clevis bracket (CB)	SSD-CB-25	SSD-CB-32	SSD-CB-40	SSD-CB-50	SSD-CB-63	SSD-CB-80	SSD-CB-100
Clevis bracket (CB2)	SSD-CB2-25	SSD-CB2-32	SSD-CB2-40	SSD-CB2-50	SSD-CB2-63	SSD-CB2-80	SSD-CB2-100

*1: The foot mounting bracket is provided as 2 pcs./set.

Internal structure and parts list

● SSD-KG1L/KG4L-25 (double acting/single rod high load/anti-spatter adherence/with switch)

ø25: Over 150 to 300 mm stroke

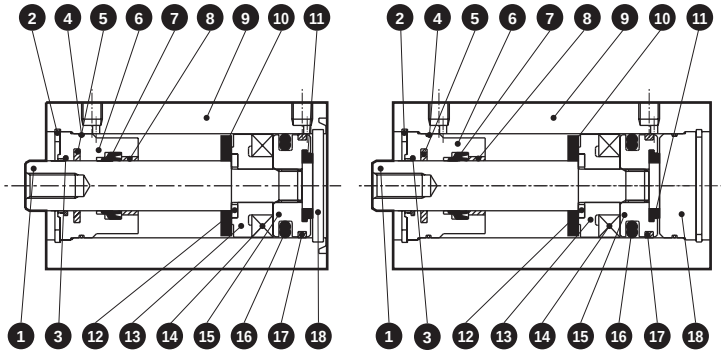

● SSD-KG1L/KG4L-32 to 50 (double acting/single rod high load/anti-spatter adherence/with switch)

ø32 to ø50: Over 150 to 300 mm stroke

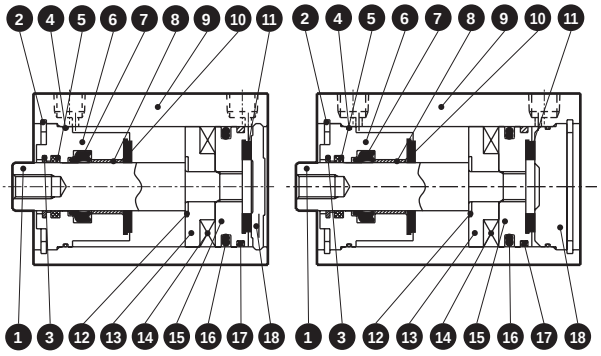

● SSD-KG1/KG4-25 (double acting/single rod high load/anti-spatter adherence)

ø25: Over 150 to 300 mm stroke

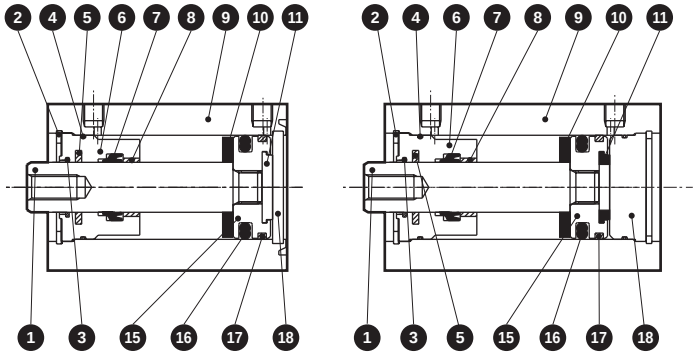

● SSD-KG1/KG4-32 to 50 (double acting/single rod high load/anti-spatter adherence)

ø32 to ø50: Over 150 to 300 mm stroke

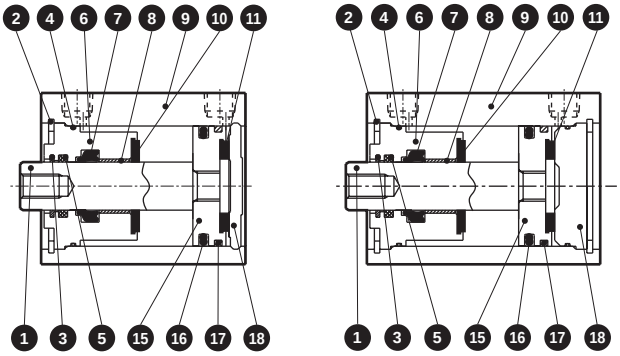

No.	Part name	Material	Remarks	No.	Part name	Material	Remarks
1	Piston rod	ø25: Stainless steel, ø32 to ø50: Steel	Industrial chrome plating	10	Cushion rubber R	Urethane rubber	
				11	Cushion rubber H	Urethane rubber	
2	C-snap ring for hole	Steel	Zinc phosphate	12	Spacer washer	Stainless steel	
3	Coil scraper	Phosphor bronze		13	Spacer	Special resin	
4	Rod metal gasket	Nitrile rubber		14	Magnet	Plastic	
5	Lube keeping structure	Special rubber	G4 only	15	Piston	Aluminum alloy	Chromate
6	Rod metal	Special aluminum	Alumite	16	Piston packing	Nitrile rubber	
7	Rod packing	Nitrile rubber		17	Wear ring	Polyacetal resin	
8	Bush	Oiles drymet		18	Cover	ø25: Stainless steel ø32 to ø50: Aluminum alloy	Chromate (ø32 to ø50) (*1)
9	Tube body	Aluminum alloy	Hard alumite				

*1 : For cover of long stroke type for ø25, Material: Aluminum alloy, Remarks: Chromate treatment.
*2 : For dimensions of individual accessories, refer to pages 1108 to 1115.

Repair parts list

Part name / Bore size (mm)	Kit No.	Repair parts No.
ø25	SSD-KG1-25K	❸ ❹ ❼ ❿ ⓫ ⓰ ⓱
ø32	SSD-KG1-32K	
ø40	SSD-KG1-40K	
ø50	SSD-KG1-50K	

Internal structure and parts list

● SSD-KG1L/KG4L-63 to 100 (double acting/single rod high load/anti-spatter adherence/with switch)

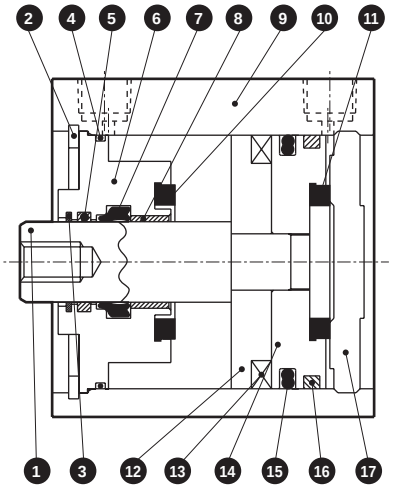

ø63 to ø100: Over 200 to 300 mm stroke

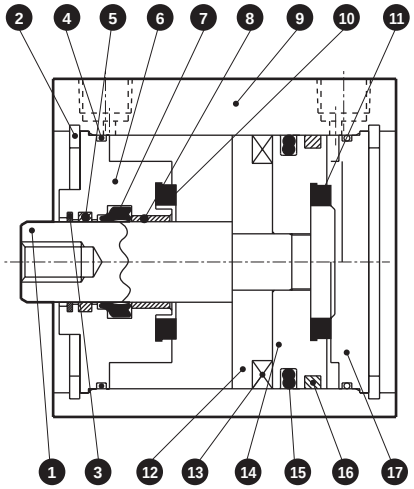

● SSD-KG1/KG4-63 to 100 (double acting/single rod high load/anti-spatter adherence)

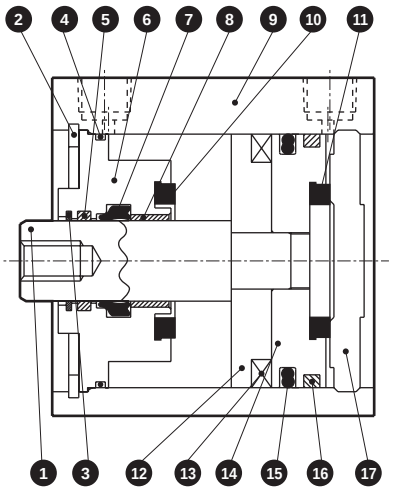

ø63 to ø100: Over 200 to 300 mm stroke

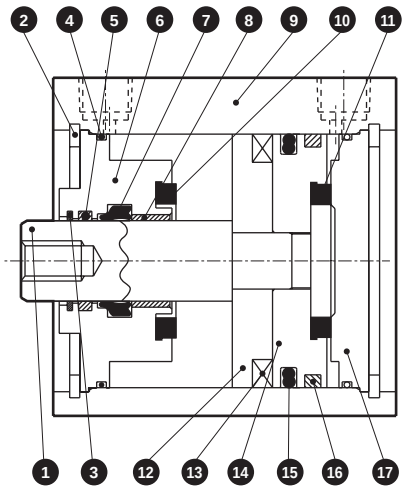

No.	Part name	Material	Remarks	No.	Part name	Material	Remarks
1	Piston rod	Steel	Industrial chrome plating	10	Cushion rubber R	Urethane rubber	
2	C-snap ring for hole	Steel	Zinc phosphate	11	Cushion rubber H	Urethane rubber	
3	Coil scraper	Phosphor bronze		12	Spacer	Aluminum alloy	Chromate
4	Rod metal gasket	Nitrile rubber		13	Magnet	Plastic	
5	Lube keeping structure	Special rubber	G4 only	14	Piston	Aluminum alloy	Chromate
6	Rod metal	Aluminum alloy	Chromate	15	Piston packing	Nitrile rubber	
7	Rod packing	Nitrile rubber		16	Wear ring	Polyacetal resin	
8	Bush	Oiles drymet		17	Cover	Aluminum alloy	Chromate
9	Tube body	Aluminum alloy	Hard alumite				

Repair parts list

Part name / Bore size (mm)	Kit No.	Repair parts No.
ø63	SSD-KG1-63K	3 4 7 10 11 15 16
ø80	SSD-KG1-80K	
ø100	SSD-KG1-100K	

Dimensions

● SSD-KG1L/KG4L-25 (with switch)

● Rod end male thread

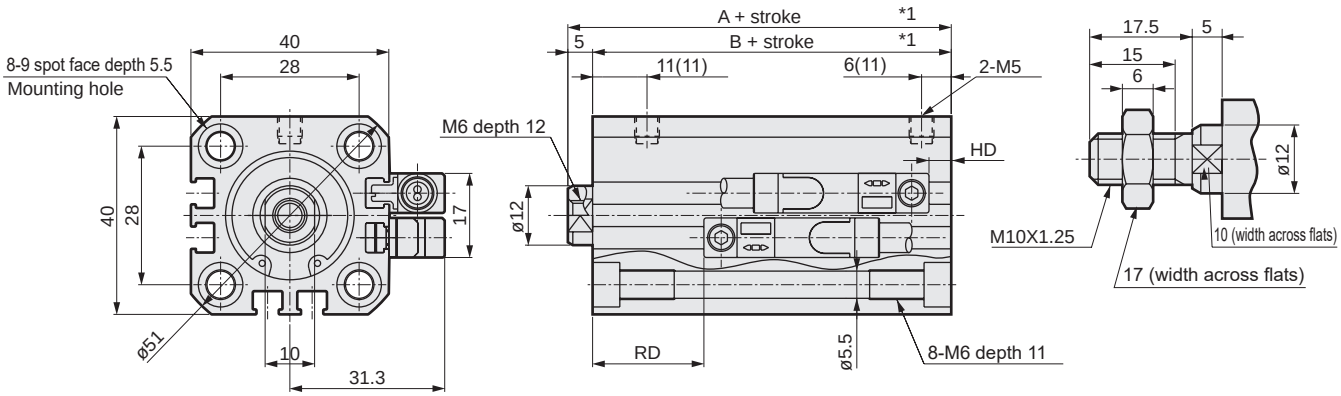

● SSD-KG1/KG4-25 (without switch)

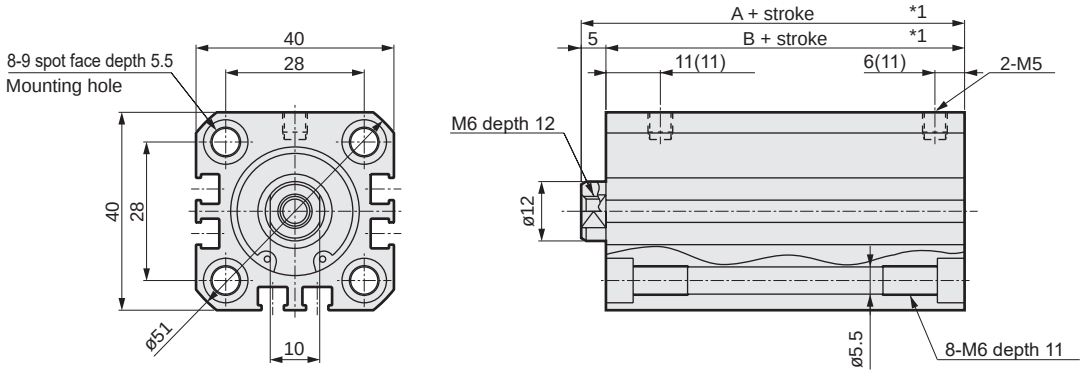

Code	No switch		Dimensions with switch			
Bore size (mm)	A *1	B *1	A *1	B *1	RD *2,*3	HD *2,*3
ø25	42.5	37.5	52.5	47.5	22.5(27.5)	4.5(13)

● Table 2

Code	No switch		Dimensions with switch	
Bore size (mm)	A *1	B *1	A *1	B *1
ø25	56	51	66	61

*1 : To calculate A+ stroke or B+ stroke when using custom stroke, apply the next longer standard stroke (instead of the custom stroke) to the stroke value. When longer than 150 mm stroke, A and B dimensions are indicated in Table 2. In addition, there is no 9 spot face.
(Example) If the custom stroke is 17 mm, apply the standard stroke 20 mm.
*2 : When longer than 150 mm stroke, HD and RD dimensions are indicated in ( ).
*3 : RD dimensions for custom stroke differ from these dimensions according to the setting.
*4 : For dimensions of individual accessories, refer to pages 1108 to 1115.

Dimensions

● SSD-KG1L/KG4L-32 to 100 (with switch)

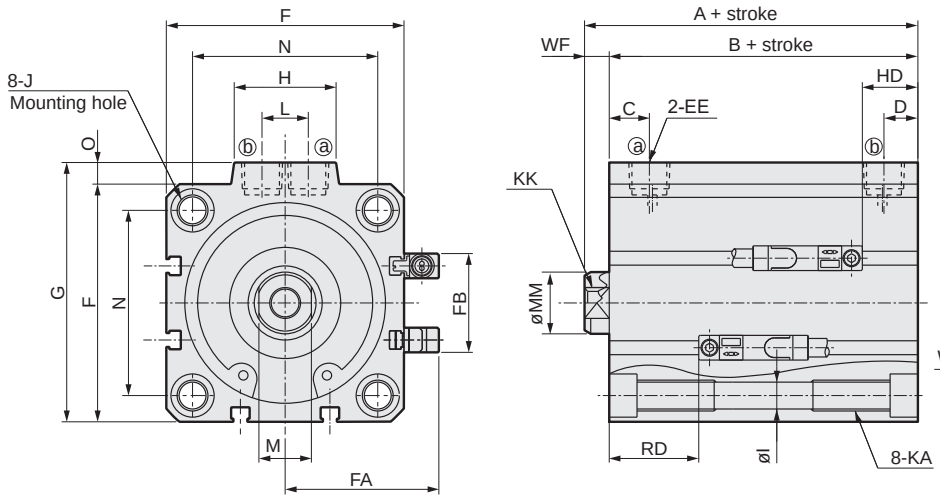

● Rod end male thread

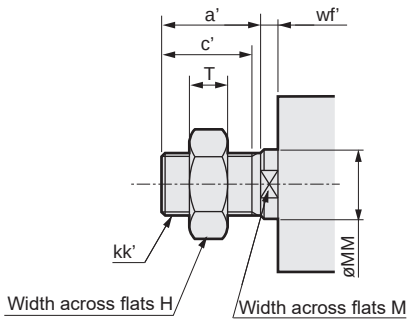

[Bore size ø100]

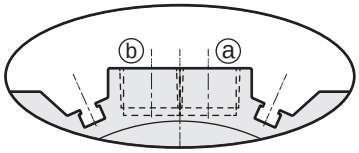

* Only for ø100, the port surface has switch grooves.

Code / Bore size (mm)	Dimensions with switch													
	A *1	B *1	C	D *2	EE	F	FA	FB	G	H	I	J	KA	KK
ø32	60	53	8	8(8)	Rc1/8	45	33.8	24	49.5	24	5.5	9 spot face depth 5.5	M6 depth 11	M8 depth 13
ø40	66.5	59.5	12	8.5(12)	Rc1/8	52	37.3	31	57	24	5.5	9 spot face depth 5.5	M6 depth 11	M8 depth 13
ø50	68.5	60.5	10.5	10.5(10.5)	Rc1/4	64	43.3	32	71	33	6.9	11 spot face depth 6.5	M8 depth 13	M10 depth 15
ø63	74	66	13	11(13)	Rc1/4	77	49.8	32	84	33	8.7	14 spot face depth 9	M10 depth 25	M10 depth 15
ø80	83.5	73.5	16	13(16)	Rc3/8	98	60.3	32	104	38	10.5	17.5 spot face depth 11	M12 depth 28	M16 depth 21
ø100	95	83	23	15(23)	Rc3/8	117	69.8	32	123.5	38	10.5	17.5 spot face depth 11	M12 depth 28	M20 depth 27

Code / Bore size (mm)	Dimensions with switch						With T2YD type switch	
	L	M	MM	N	O	WF	RD *2,*3	HD *2
ø32	10	14	16	34	4.5	7	25.5(25.5)	9.5(17)
ø40	10	14	16	40	5	7	31(31)	10.5(20)
ø50	15	17	20	50	7	8	31(36)	11.5(20.5)
ø63	15	17	20	60	7	8	29(34)	18(23.5)
ø80	15	22	25	77	6	10	31.5(36.5)	24(29.5)
ø100	15	27	30	94	6.5	12	35.5(40.5)	29.5(35)

*1 : To calculate A+ stroke or B+ stroke when using custom stroke, apply the next longer standard stroke (instead of the custom stroke) to the stroke value. (Example) If the custom stroke is 17 mm, apply the standard stroke 20 mm. When longer than 150 mm stroke for ø32 to ø50 or longer than 200 mm stroke for ø63 to ø100, AB dimensions are indicated in Table 2. In addition, there is no spot face J.

*2 : When longer than 150 mm stroke for ø32 to ø50 or longer than 200 mm stroke for ø63 to ø100, HD, RD, and D dimensions are indicated in ( ).

*3 : RD dimensions for custom stroke differ from these dimensions according to the setting.

*4 : For dimensions of individual accessories, refer to pages 1108 to 1115.

● Table 2

Code / Bore size (mm)	With switch	
	A *1	B *1
ø32	67.5	60.5
ø40	76	69
ø50	82	74
ø63	84	76
ø80	93.5	83.5
ø100	105	93

● Dimensions of rod end male thread part

Code / Bore size (mm)	a'	C'	H	kk'	M	MM	T	wf'
ø32	23.5	20.5	22	M14x1.5	14	16	8	5
ø40	23.5	20.5	22	M14x1.5	14	16	8	5
ø50	28.5	26	27	M18x1.5	17	20	11	5
ø63	28.5	26	27	M18x1.5	17	20	11	5
ø80	35.5	32.5	32	M22x1.5	22	25	13	8
ø100	35.5	32.5	41	M26x1.5	27	30	16	8

Dimensions

● SSD-KG1/KG4-32 to 100 (without switch)

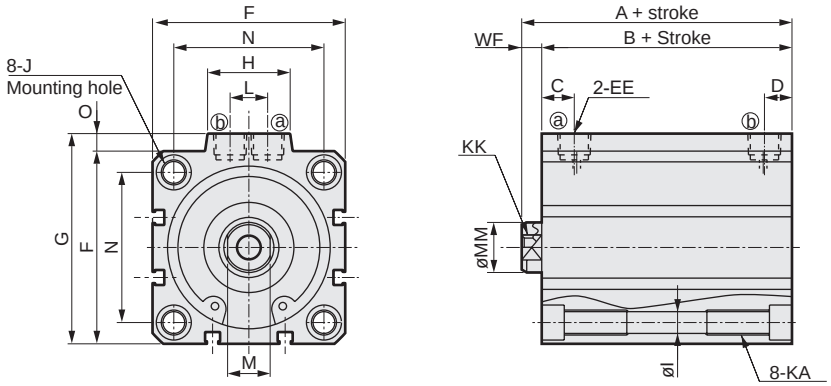

● Rod end male thread

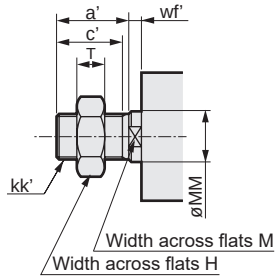

[Bore size ø100]

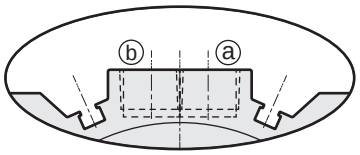

* Only for ø100, the port surface has switch grooves.

Code / Bore size (mm)	Dimensions without switch																	
	A *1	B *1	C	D *2	EE	F	G	H	I	J	KA	KK	L	M	MM	N	O	WF
ø32	50	43	8	8(8)	Rc1/8	45	49.5	24	5.5	9 spot face depth 5.5	M6 depth 11	M8 depth 13	10	14	16	34	4.5	7
ø40	56.5	49.5	12	8.5(12)	Rc1/8	52	57	24	5.5	9 spot face depth 5.5	M6 depth 11	M8 depth 13	10	14	16	40	5	7
ø50	58.5	50.5	10.5	10.5(10.5)	Rc1/4	64	71	33	6.9	11 spot face depth 6.5	M8 depth 13	M10 depth 15	15	17	20	50	7	8
ø63	64	56	13	11(13)	Rc1/4	77	84	33	8.7	14 spot face depth 9	M10 depth 25	M10 depth 15	15	17	20	60	7	8
ø80	73.5	63.5	16	13(16)	Rc3/8	98	104	38	10.5	17.5 spot face depth 11	M12 depth 28	M16 depth 21	15	22	25	77	6	10
ø100	85	73	23	15(23)	Rc3/8	117	123.5	38	10.5	17.5 spot face depth 11	M12 depth 28	M20 depth 27	15	27	30	94	6.5	12

● Table 2

Code / Bore size (mm)	Dimensions without switch	
	A *1	B *1
ø32	57.5	50.5
ø40	66	59
ø50	72	64
ø63	74	66
ø80	83.5	73.5
ø100	95	83

*1 : To calculate A+ stroke or B+ stroke when using custom stroke, apply the next longer standard stroke (instead of the custom stroke) to the stroke value.
(Example) If the custom stroke is 17 mm, apply the standard stroke 20 mm.
When longer than 150 mm stroke for ø32 to ø50 or longer than 200 mm stroke for ø63 to ø100, AB dimensions are indicated in Table 2. In addition, there is no spot face J.

*2 : When longer than 150 mm stroke for ø32 to ø50 or longer than 200 mm stroke for ø63 to ø100, D dimensions are indicated in ( ).

● Dimensions of rod end male thread part

Code / Bore size (mm)	a'	C'	H	kk'	M	MM	T	wf'
ø32	23.5	20.5	22	M14x1.5	14	16	8	5
ø40	23.5	20.5	22	M14x1.5	14	16	8	5
ø50	28.5	26	27	M18x1.5	17	20	11	5
ø63	28.5	26	27	M18x1.5	17	20	11	5
ø80	35.5	32.5	32	M22x1.5	22	25	13	8
ø100	35.5	32.5	41	M26x1.5	27	30	16	8

* For dimensions of individual accessories, refer to pages 1108 to 1115.

MEMO

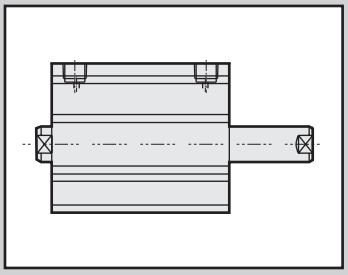

Compact cylinder
Double acting/double rod/coil scraper

SSD-DG1 Series

Compact cylinder
Double acting/double rod/anti-spatter adherence

SSD-DG4 Series

● Bore size: ø25/ø32/ø40/ø50/ø63/ø80/ø100

JIS symbol

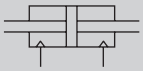

RoHS CAD

Specifications

Item	SSD-DG1/DG4 SSD-DG1L/DG4L (with switch)						
Bore size mm	ø25	ø32	ø40	ø50	ø63	ø80	ø100
Actuation	Double acting						
Working fluid	Compressed air						
Max. working pressure MPa	1.0 (≈150 psi, 10 bar)						
Min. working pressure MPa	0.2 (≈29 psi, 2 bar)				0.15 (≈22 psi, 1.5 bar)		
Proof pressure MPa	1.6 (≈230 psi, 16 bar)						
Ambient temperature °C	-10 (14°F) to 60 (140°F) (no freezing)						
Port size	Rc1/8			Rc1/4		Rc3/8	
Stroke tolerance mm	+1.0 0						
Working piston speed mm/s	50 to 500					50 to 300	
Cushion	None						
Lubrication	Not required (use turbine oil ISO VG32 if necessary for lubrication)						
Allowable absorbed energy J	0.021	0.025	0.092	0.1	0.12	0.27	0.56

Stroke

Bore size (mm)	Standard stroke (mm)	Max. stroke (mm)	Min. stroke (mm) (with strong magnetic field proof switch)
ø25	5, 10, 15, 20, 25, 30, 40, 50	50	1 (10) *1) The value in ( ) is for types with one or two switches.
ø32			
ø40			
ø50			
ø63	5, 10, 20, 30, 40, 50	50	
ø80			
ø100			

*1) The custom stroke is available in 1 mm increments.

Switch specifications

● Proximity switch for strong magnetic field proof

Item	2-wire proximity T2YD
Applications	Dedicated for programmable controller
Indicator	Red/green LED (Lit when ON)
Load voltage	24 VDC ±10%
Load current	5 to 20 mA
Internal voltage drop	6V or less
Leakage current	1.0mA or less
Output delay time *1 (ON delay, OFF delay)	60 ms or less
Lead wire length	1 m (oil resistant vinyl cabtyre cable ø 6, 0.5 mm^2 x 2-conductor) *2, *3
Insulation resistance	100 MΩ or more at 500 VDC megger
Withstand voltage	No failure after 1 minute of 1,000 VAC application.
Shock resistance	980 m/s^2
Ambient temperature	-10 to +60°C
Degree of protection	JIS C0920 (water-tight), IEC standards IP67, oil resistance
Weight g	1 m:61 3 m:166 5 m:272

*1: Indicates the time from magnetic sensor detection of the piston magnet until switch output.
*2: 3 m and 5 m lead wires are available as options.
*3: Flame-resistant lead wires are available as options.
*4: Switch for AC magnetic field (T2YD) cannot be used in DC magnetic field.

Cylinder weight table (the weight of the switches is when there are 2 cylinder switches.)

(Unit: g)

Stroke (mm)	5		10		15		20		25		30		40		50	
Bore size (mm)	No switch	Switch	No switch	Switch	No switch	Switch	No switch	Switch	No switch	Switch	No switch	Switch	No switch	Switch	No switch	Switch
ø25	234	325	249	340	265	356	281	372	297	388	313	403	344	435	375	466
ø32	308	423	354	468	399	514	446	560	490	605	537	651	631	741	725	831
ø40	446	589	473	616	499	642	526	669	553	696	579	732	632	775	685	828
ø50	696	890	746	940	796	989	846	1041	896	1089	946	1139	1046	1239	1149	1343
ø63	1128	1254	1203	1567	-	-	1353	1717	-	-	1503	1867	1654	2018	1804	2168
ø80	1995	1925	2112	2042	-	-	2345	2798	-	-	2578	3031	2812	3275	3045	3508
ø100	2984	3611	3153	3775	-	-	3490	4072	-	-	3828	4440	4165	4767	4503	5095

Theoretical thrust table

(Unit: N)

Bore size (mm)	Operating direction	Working pressure MPa									
		0.15	0.2	0.3	0.4	0.5	0.6	0.7	0.8	0.9	1.0
ø25	Push	-	98.2	$1.47x10^2$	$1.96x10^2$	$2.45x10^2$	$2.95x10^2$	$3.44x10^2$	$3.93x10^2$	$4.42x10^2$	$4.91x10^2$
	Pull	-	75.6	$1.13x10^2$	$1.51x10^2$	$1.89x10^2$	$2.27x10^2$	$2.64x10^2$	$3.02x10^2$	$3.40x10^2$	$3.78x10^2$
ø32	Push	-	$1.61x10^2$	$2.41x10^2$	$3.22x10^2$	$4.02x10^2$	$4.83x10^2$	$5.63x10^2$	$6.43x10^2$	$7.24x10^2$	$8.04x10^2$
	Pull	-	$1.21x10^2$	$1.81x10^2$	$2.41x10^2$	$3.02x10^2$	$3.62x10^2$	$4.22x10^2$	$4.83x10^2$	$5.43x10^2$	$6.03x10^2$
ø40	Push	-	$2.51x10^2$	$3.77x10^2$	$5.03x10^2$	$6.28x10^2$	$7.54x10^2$	$8.80x10^2$	$1.01x10^3$	$1.13x10^3$	$1.26x10^3$
	Pull	-	$2.11x10^2$	$3.17x10^2$	$4.22x10^2$	$5.28x10^2$	$6.33x10^2$	$7.39x10^2$	$8.44x10^2$	$9.50x10^2$	$1.06x10^3$
ø50	Push	-	$3.93x10^2$	$5.89x10^2$	$7.85x10^2$	$9.82x10^2$	$1.18x10^3$	$1.37x10^3$	$1.57x10^3$	$1.77x10^3$	$1.96x10^3$
	Pull	-	$3.30x10^2$	$4.95x10^2$	$6.60x10^2$	$8.25x10^2$	$9.90x10^2$	$1.15x10^3$	$1.32x10^3$	$1.48x10^3$	$1.65x10^3$
ø63	Push	$4.68x10^2$	$6.23x10^2$	$9.35x10^2$	$1.25x10^3$	$1.56x10^3$	$1.87x10^3$	$2.18x10^3$	$2.49x10^3$	$2.81x10^3$	$3.12x10^3$
	Pull	$4.20x10^2$	$5.61x10^2$	$8.41x10^2$	$1.12x10^3$	$1.40x10^3$	$1.68x10^3$	$1.96x10^3$	$2.24x10^3$	$2.52x10^3$	$2.80x10^3$
ø80	Push	$7.54x10^2$	$1.01x10^3$	$1.51x10^3$	$2.01x10^3$	$2.51x10^3$	$3.02x10^3$	$3.52x10^3$	$4.02x10^3$	$4.52x10^3$	$5.03x10^3$
	Pull	$6.80x10^2$	$9.07x10^2$	$1.36x10^3$	$1.81x10^3$	$2.27x10^3$	$2.72x10^3$	$3.17x10^3$	$3.63x10^3$	$4.08x10^3$	$4.54x10^3$
ø100	Push	$1.18x10^3$	$1.57x10^3$	$2.36x10^3$	$3.14x10^3$	$3.93x10^3$	$4.71x10^3$	$5.50x10^3$	$6.28x10^3$	$7.07x10^3$	$7.85x10^3$
	Pull	$1.07x10^3$	$1.43x10^3$	$2.14x10^3$	$2.86x10^3$	$3.57x10^3$	$4.29x10^3$	$5.00x10^3$	$5.72x10^3$	$6.43x10^3$	$7.15x10^3$

How to order

No switch (without magnet for switch)

SSD-DG4 – 32 - 10 ——— N - LB - I

With switch (built-in magnet for switch)

SSD-DG4L - 32 - 10 - T2YD - R - N - LB - I

Ⓐ Model No.
Ⓑ Bore size
Ⓒ Stroke
Ⓓ Switch model No. *4
Ⓔ Switch quantity
Ⓕ Option
Ⓖ Mounting bracket *1 *2
Ⓗ Accessory *3

Code	Description
Ⓐ Model No.	
SSD-DG1	Double acting/double rod/coil scraper
SSD-DG1L	Double acting/double rod/coil scraper/with switch
SSD-DG4	Double acting/double rod/anti-spatter adherence
SSD-DG4L	Double acting/double rod/anti-spatter adherence/with switch
Ⓑ Bore size (mm)	
25	ø25
32	ø32
40	ø40
50	ø50
63	ø63
80	ø80
100	ø100
Ⓒ Stroke (mm)	
Refer to the stroke table on the following page.	

Ⓓ Switch model No.

Axial lead wire	Radial lead wire	Contact	Voltage	Indicator	Lead wire
T2YD*	—	Proximity	DC	2-color LED AC magnetic field	2-wire
T2YDT*	—				
T2YDU (made-to-order product)				Cable connector SW, magnetic proof	

*** Lead wire length**	
Blank	1 m (standard)
3	3 m (option)
5	5 m (option)
Ⓔ Switch quantity	
R	1 on rod side
H	1 on head side
D	2
Ⓕ Option	
Blank	Rod end female thread
N	Rod end male thread
Ⓖ Mounting bracket	
LB	Axial foot
LB2	Axial foot (compact)
FA	Rod side flange
Ⓗ Accessory (available when rod end male thread "N" is selected)	
I	Rod eye
I2	Rod eye (compact)
Y	Rod clevis (pin and snap ring included)
Y2	Rod clevis (compact) (pin and snap ring included)

⚠ Precautions for model No. selection

*1 : The mounting bracket is included at shipment.
*2 : The projection dimension of piston rod WF when LB2 or FA is selected is different from that of the standard. Refer to the dimensions on pages 1109 and 1110. The number of the specified protruding dimension will be added at the end of the model No. printed on the metal plate on the body.
*3 : "I" and "Y" cannot be selected together.
*4 : Switches are shipped with the product. Contact CKD if assembling before shipment is necessary.

[Example of model No.]

SSD-DG4L-32-10-T2YD-R-N

Model: Compact cylinder
Double acting double rod
anti-spatter adherence

Ⓑ Bore size : ø32 mm
Ⓒ Stroke : 10 mm
Ⓓ Switch model No.: Proximity switch for strong magnetic field proof T2YD
· Lead wire length 1 m
Ⓔ Switch quantity : 1 on rod side
Ⓕ Option : Rod end male thread

[Stroke table]

Stroke (mm)		Applicable bore size						
		ø25	ø32	ø40	ø50	ø63	ø80	ø100
Standard stroke	5	●	●	●	●	●	●	●
	10	●	●	●	●	●	●	●
	15	●	●	●	●			
	20	●	●	●	●	●	●	●
	25	●	●	●	●			
	30	●	●	●	●	●	●	●
	40	●	●	●	●	●	●	●
	50	●	●	●	●	●	●	●
Min. stroke (mm) *1		1						
Max. stroke (mm)		50						
Custom stroke *2		In 1 mm increments						

*1: Less than 10 mm stroke with AC magnetic field proof switch is not available.
*2: The total length is the same as that of the next longer standard stroke.

How to order switch

SW - T2YD

Switch model No.
(Item Ⓓ above)

How to order mounting bracket

Bore size (mm) / Mounting bracket	ø25	ø32	ø40	ø50	ø63	ø80	ø100
Foot (LB)	SSD-LB-25	SSD-LB-32	SSD-LB-40	SSD-LB-50	SSD-LB-63	SSD-LB-80	SSD-LB-100
Foot (LB2)	SSD-LB2-25	SSD-LB2-32	SSD-LB2-40	SSD-LB2-50	SSD-LB2-63	SSD-LB2-80	SSD-LB2-100
Flange (FA)	SSD-FA-25	SSD-FA-32	SSD-FA-40	SSD-FA-50	SSD-FA-63	SSD-FA-80	SSD-FA-100
Clevis bracket (CB)	SSD-CB-25	SSD-CB-32	SSD-CB-40	SSD-CB-50	SSD-CB-63	SSD-CB-80	SSD-CB-100
Clevis bracket (CB2)	SSD-CB2-25	SSD-CB2-32	SSD-CB2-40	SSD-CB2-50	SSD-CB2-63	SSD-CB2-80	SSD-CB2-100

*1: The foot mounting bracket is provided as 2 pcs./set.

Internal structure and parts list

● SSD-DG1L/DG4L-25 (double acting/double rod/anti-spatter adherence/with switch)

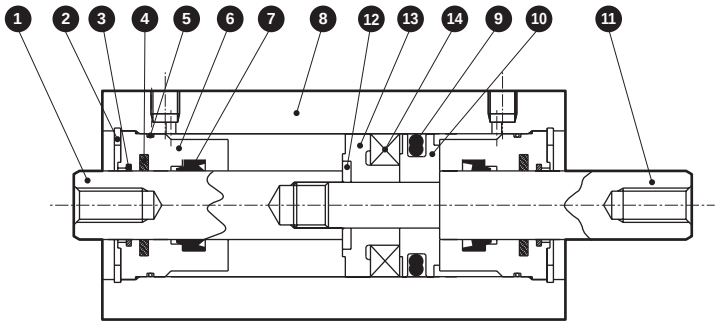

● SSD-DG1/DG4-25 (double acting/double rod/anti-spatter adherence)

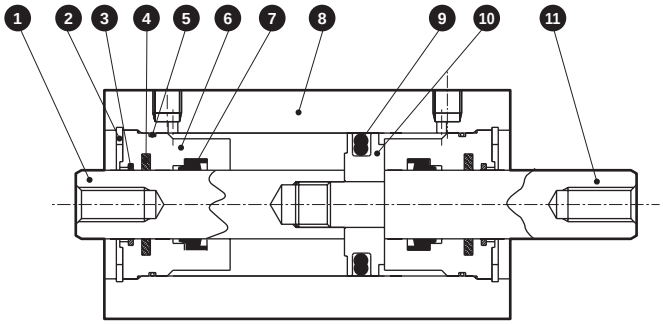

No.	Part name	Material	Remarks	No.	Part name	Material	Remarks
1	Piston rod A	Stainless steel	Industrial chrome plating	8	Tube body	Aluminum alloy	Hard alumite
2	C-snap ring for hole	Steel	Zinc phosphate	9	Piston packing	Nitrile rubber	
3	Coil scraper	Phosphor bronze		10	Piston	Aluminum alloy	Chromate
4	Lube keeping structure	Special rubber		11	Piston rod B	Stainless steel	Industrial chrome plating
5	Rod metal gasket	Nitrile rubber		12	Spacer washer	Stainless steel	
6	Rod metal	Special aluminum	Alumite	13	Spacer	Special resin	
7	Rod packing	Nitrile rubber		14	Magnet	Plastic	

Repair parts list

Part name / Bore size (mm)	Kit No.	Repair parts No.
ø25	SSD-DG1-25K	3 5 7 9

Internal structure and parts list

● SSD-DG1L/DG4L-32 to 50 (double acting/double rod/anti-spatter adherence/with switch)

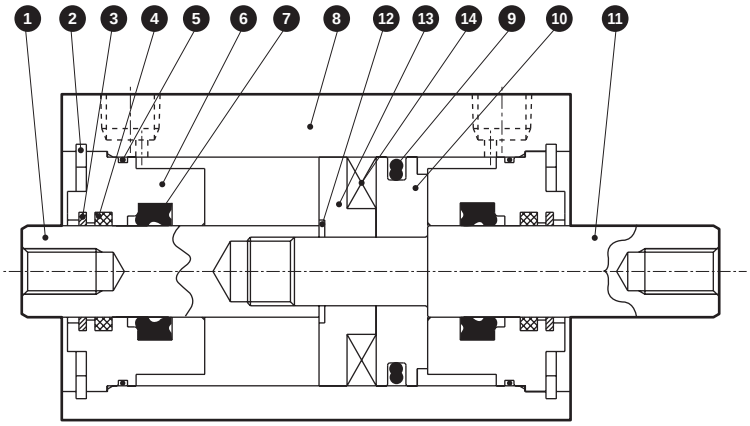

● SSD-DG1/DG4-32 to 50 (double acting/double rod/anti-spatter adherence)

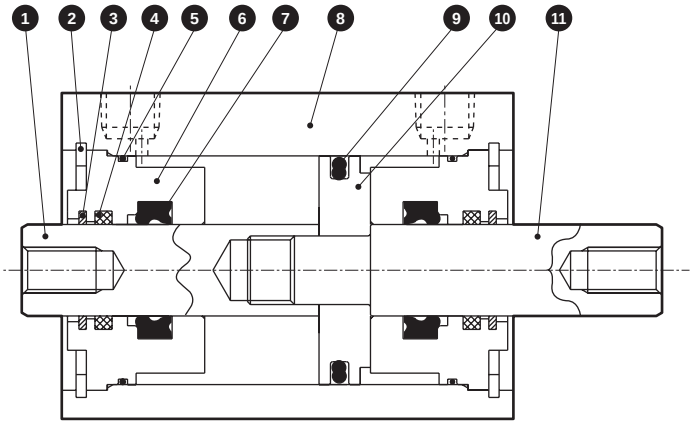

No.	Part name	Material	Remarks
1	Piston rod A	Steel	Industrial chrome plating
2	C-snap ring for hole	Steel	Zinc phosphate
3	Coil scraper	Phosphor bronze	
4	Lube keeping structure	Special rubber	G4 only
5	Rod metal gasket	Nitrile rubber	
6	Rod metal	Special aluminum	Alumite
7	Rod packing	Nitrile rubber	

No.	Part name	Material	Remarks
8	Tube body	Aluminum alloy	Hard alumite
9	Piston packing	Nitrile rubber	
10	Piston	Aluminum alloy	Chromate
11	Piston rod B	Steel	Industrial chrome plating
12	Spacer washer	Stainless steel	ø50
13	Spacer	ø32, ø40: Aluminum alloy ø50: Special resin	ø32, ø40: Chromate
14	Magnet	Plastic	

Repair parts list

Part name / Bore size (mm)	Kit No.	Repair parts No.
ø32	SSD-DG1-32K	❸ ❺ ❼ ❾
ø40	SSD-DG1-40K	
ø50	SSD-DG1-50K	

Internal structure and parts list

● SSD-DG1L/DG4L-63 to 100 (double acting/double rod/anti-spatter adherence/with switch)

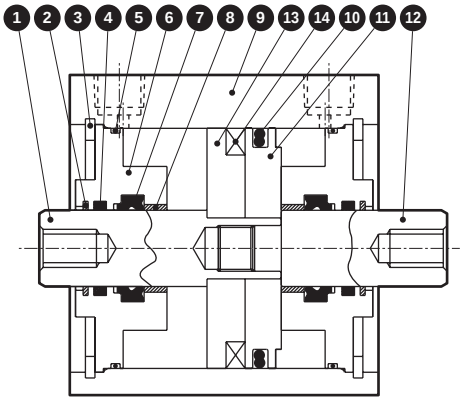

● SSD-DG1/DG4-63 to 100 (double acting/double rod/anti-spatter adherence)

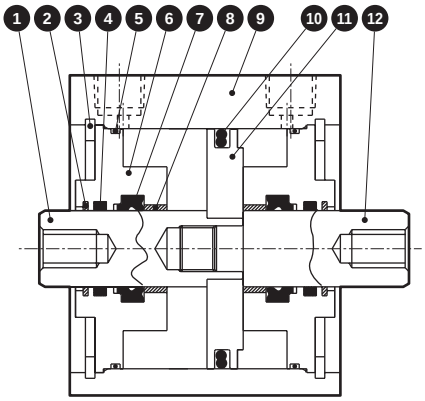

No.	Part name	Material	Remarks	No.	Part name	Material	Remarks
1	Piston rod A	Steel	Industrial chrome plating	8	Bush	Oiles drymet	
2	Coil scraper	Phosphor bronze		9	Tube body	Aluminum alloy	Hard alumite
3	C-snap ring for hole	Steel	Zinc phosphate	10	Piston packing	Nitrile rubber	Chromate
4	Lube keeping structure	Special rubber	G4 only	11	Piston	Aluminum alloy	Chromate
5	Rod metal gasket	Nitrile rubber		12	Piston rod B	Steel	Industrial chrome plating
6	Rod metal	Aluminum alloy	Chromate	13	Spacer	Aluminum alloy	Chromate
7	Rod packing	Nitrile rubber		14	Magnet	Plastic	

Repair parts list

Part name / Bore size (mm)	Kit No.	Repair parts No.
ø63	SSD-DG1-63K	2 5 7 10
ø80	SSD-DG1-80K	
ø100	SSD-DG1-100K	

Dimensions

● SSD-DG1L/DG4L-25 (with switch)

● Rod end male thread

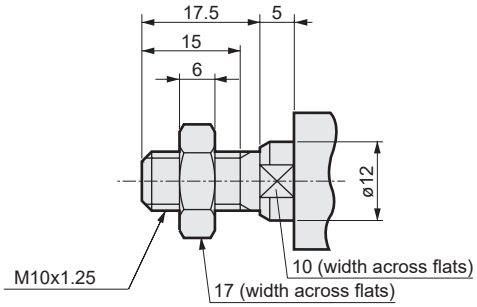

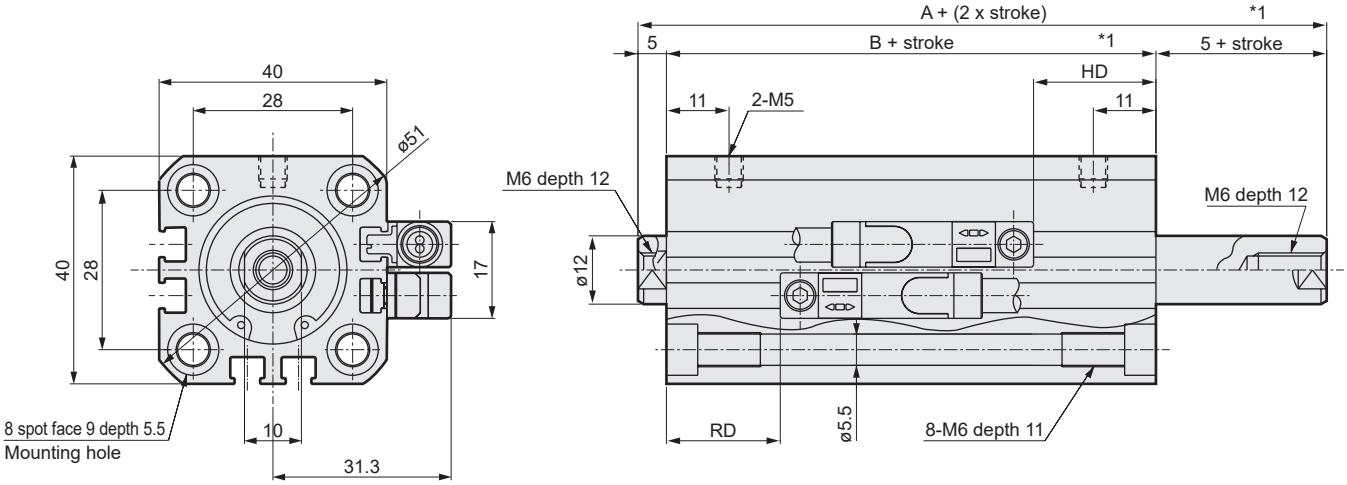

● SSD-DG1/DG4-25 (without switch)

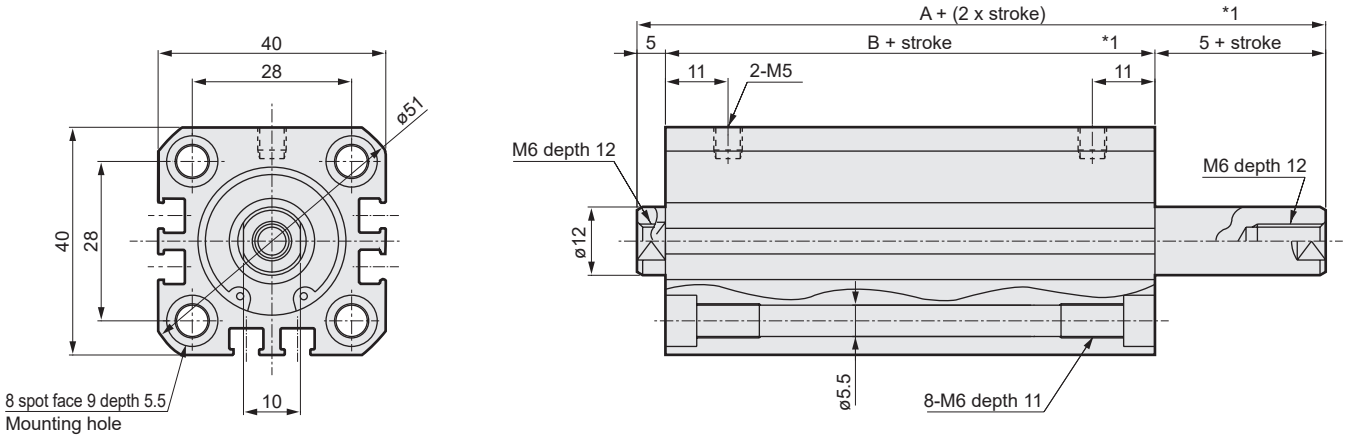

Code	No switch		Dimensions with switch			
Bore size (mm)	A *1	B *1	A *1	B *1	RD *2	HD
ø25	61	51	71	61	20	21.5

*1 : To calculate A+ (2 x stroke), B+ stroke or 5+ stroke when using a custom stroke, apply the next longer standard stroke (instead of the custom stroke) to the stroke value. Left and right projection dimensions of rod differ.
(Example) If the custom stroke is 17 mm, apply the standard stroke 20 mm.
*2 : RD dimensions for custom stroke differ from these dimensions according to the setting.
*3 : For dimensions of individual accessories, refer to pages 1108 to 1115.
*4: The positions for the left and right widths across flats are unspecified.

Dimensions

● SSD-DG1L/DG4L-32 to 100 (with switch)

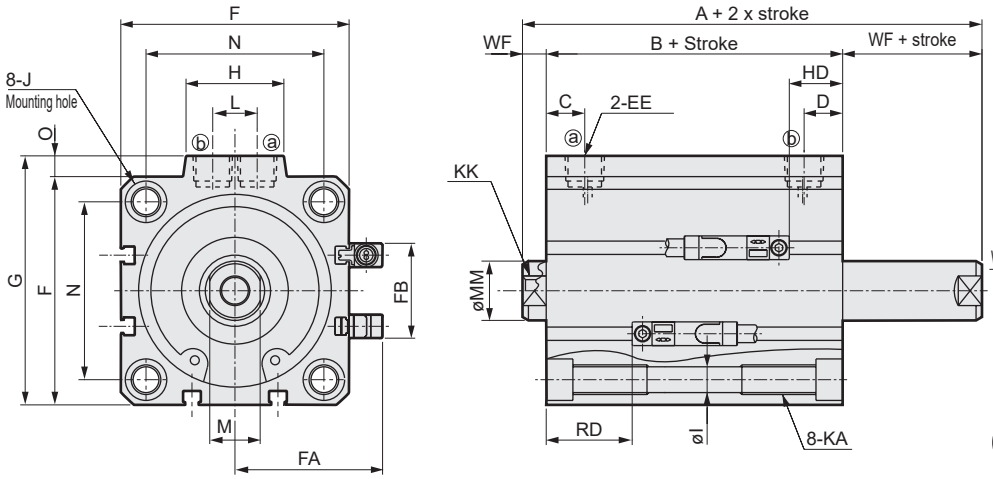

● Rod end male thread

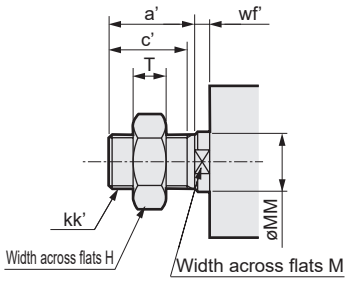

[Bore size ø100]

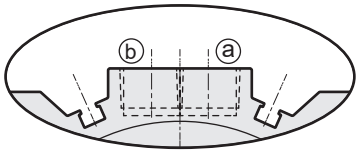

* Only for ø100, the port surface has switch grooves.

● SSD-DG1/DG4-32 to 100 (without switch)

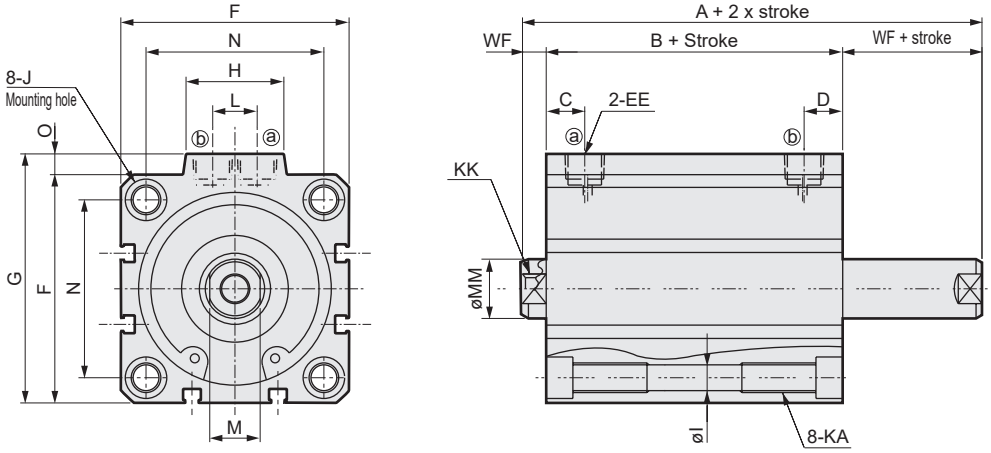

Code	No switch		Common dimensions with switch														
Bore size (mm)	A *1	B *1	A *1	B *1	C	D	EE	F	FA	FB	G	H	I	J	KA	KK
ø32	64.5	50.5	74.5	60.5	8	8	Rc1/8	45	33.8	20.5	49.5	24	5.5	9 spot face depth 5.5	M6 depth 11	M8 depth 13
ø40	73	59	83	69	12	12	Rc1/8	52	37.3	27.5	57	24	5.5	9 spot face depth 5.5	M6 depth 11	M8 depth 13
ø50	75	59	85	69	10.5	10.5	Rc1/4	64	43.3	28.5	71	33	6.9	11 spot face depth 6.5	M8 depth 13	M10 depth 15
ø63	77	61	87	71	13	13	Rc1/4	77	49.8	28.5	84	33	8.7	14 spot face depth 9	M10 depth 25	M10 depth 15
ø80	88.5	68.5	98.5	78.5	16	16	Rc3/8	98	60.3	28.5	104	38	10.5	17 spot face depth 11	M12 depth 28	M16 depth 21
ø100	102	78	112	88	23	23	Rc3/8	117	69.8	28.5	123.5	38	10.5	17.5 spot face depth 11	M12 depth 28	M20 depth 27

Code	Common dimensions with switch						With T2YD switch	
Bore size (mm)	L	M	MM	N	O	WF	RD *2	HD
ø32	10	14	16	34	4.5	7	20.5	22
ø40	10	14	16	40	5	7	23.5	27.5
ø50	15	17	20	50	7	8	23.5	27.5
ø63	15	17	20	60	7	8	24	28.5
ø80	15	22	25	77	6	10	26.5	35
ø100	15	27	30	94	6.5	12	30.5	40.5

*1 : To calculate A+ (2 x stroke), B+ stroke or WF+ stroke when using a custom stroke, apply the next longer standard stroke (instead of the custom stroke) to the stroke value. Left and right projection dimensions of rod differ.
(Example) If the custom stroke is 17 mm, apply the standard stroke 20 mm.
*2 : RD dimensions for custom stroke differ from these dimensions according to the setting.
*3: The positions for the left and right widths across flats are unspecified.

● Dimensions of rod end male thread part

Code / Bore size (mm)	a'	C'	H	kk'	M	MM	T	wf'
ø32	23.5	20.5	22	M14x1.5	14	16	8	5
ø40	23.5	20.5	22	M14x1.5	14	16	8	5
ø50	28.5	26	27	M18x1.5	17	20	11	5
ø63	28.5	26	27	M18x1.5	17	20	11	5
ø80	35.5	32.5	32	M22x1.5	22	25	13	8
ø100	35.5	32.5	41	M26x1.5	27	30	16	8

* For dimensions of individual accessories, refer to pages 1108 to 1115.

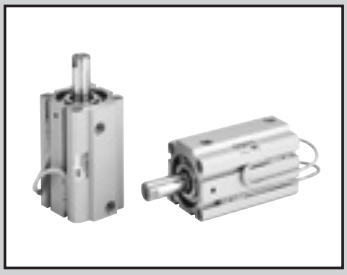

Compact cylinder double acting/single rod/environment-resistant scraper

SSD-G5 Series

● Bore size: ø20/ø25/ø32/ø40/ø50/ø63/ø80/ø100

JIS symbol

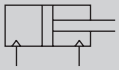

RoHS

Specifications

* Made-to-order product.

Item		SSD-G5 SSD-G5L (with switch)							
Bore size	mm	ø20	ø25	ø32	ø40	ø50	ø63	ø80	ø100
Actuation		Double acting							
Working fluid		Compressed air							
Max. working pressure	MPa	1.0 (≈150 psi, 10 bar)							
Min. working pressure	MPa	0.2 (≈29 psi, 2 bar)					0.15 (≈22 psi, 1.5 bar)		
Proof pressure	MPa	1.6 (≈230 psi, 16 bar)							
Ambient temperature	°C	-10 (14°F) to 60 (140°F) (no freezing)							
Port size		M5		Rc1/8		Rc1/4		Rc3/8	
Stroke tolerance	mm	$^{+1.0}_{0}$							
Working piston speed	mm/s	50 to 500					50 to 300		
Cushion		None							
Lubrication		Not required (use turbine oil class 1 ISO VG32 if necessary for lubrication)							
Allowable absorbed energy	J	0.016	0.021	0.025	0.092	0.1	0.12	0.27	0.56

Stroke

Bore size (mm)	Standard stroke (mm)	Max. stroke (mm)	Min. stroke (mm)
ø20	5, 10, 15, 20, 25, 30, 40, 50	50 *1	1
ø25			
ø32			
ø40			
ø50			
ø63	5, 10, 20, 30, 40, 50	50 *1	
ø80			
ø100			

*1: For ø12 to ø100, if the standard stroke is exceeded, the high load is used.

Refer to page 1280 for specifications.

*2: For the type with switch, refer to the table below of installed switch numbers and minimum stroke.

*3: The custom stroke is available in 1 mm increments. The total length when using a custom stroke is the same as that when using the next longer standard stroke.

*4: Refer to pages 1320 and 1321 for the min. stroke with mounting brackets LB and LB2.

Number of installed switches and min. stroke (mm)

Switch quantity	1	2	3	4
Switch model No. / Bore size (mm)	T*	T*	T*	T*
ø20	5	5	-	-
ø25	5	5	35	50
ø32	5	5	35	50
ø40	5	5	35	50
ø50	5	5	35	50
ø63	5	5	35	50
ø80	5	5	35	50
ø100	5	5	35	50

Note: Less than 10 mm with the 2-color LED, off-delay, AC magnetic field proof, T1* or T8* switch is not available.

Switch specifications

● 1-color/2-color LED/for AC magnetic field

Item	2-wire proximity	2-wire proximity			3-wire proximity				2-wire reed							2-wire proximity
	T1H/ T1V	T2H/T2V/ T2JH/T2JV	T2YH/ T2YV	T2WH/ T2WV	T3H/ T3V	T3PH/ T3PV	T3YH/ T3YV	T3WH/ T3WV	T0H/T0V		T5H/T5V		T8H/T8V			T2YD (*4) T2YDT
Applications	For programming controller, relay, compact solenoid valve	Dedicated for programmable controller			For programmable controller, relay				For programmable controller, relay		For programmable controller, relay (no lamp), serial		For programmable controller, relay			Dedicated for programmable controller
Output method	-				NPN output	PNP output	NPN output	NPN output	-							
Pwr. supp. V.	-				10 to 28 VDC				-							
Load voltage	85 to 265 VAC	10 to 30 VDC		24 VDC ±10%	30 VDC or less				12/24 VDC	100/110 VAC	5/12/24 VDC	100/110 VAC	12/24 VDC	110 VAC	220 VAC	24 VDC ±10%
Load current	5 to 100 mA	5 to 20 mA (*3)			100 mA or less		50 mA or less		5 to 50 mA	7 to 20 mA	50 mA or less	20 mA or less	5 to 50 mA	7 to 20 mA	7 to 10 mA	5 to 20 mA
Indicator	LED (Lit when ON)	LED (Lit when ON)	Red/green LED (Lit when ON)	Red/green LED (Lit when ON)	LED (Lit when ON)	Yellow LED (Lit when ON)	Red/green LED (Lit when ON)	Red/green LED (Lit when ON)	LED (Lit when ON)		No indicator lamp		LED (Lit when ON)			Red/green LED (Lit when ON)
Leakage current	≤ 1 mA at 100 VAC, ≤ 2 mA at 200 VAC	1 mA or less			10 μA or less				0 mA							1 mA or less
Weight g	1 m:33 3 m:87 5 m:142	1 m:18 3 m:49 5 m:80	1 m:33 3 m:87 5 m:142	1 m:18 3 m:49 5 m:80	1 m:18 3 m:49 5 m:80		1 m:33 3 m:87 5 m:142	1 m:18 3 m:49 5 m:80	1 m:18 3 m:49 5 m:80				1 m:33 3 m:87 5 m:142			1 m:61 3 m:166 5 m:272

*1 : Refer to Ending Page 1 for detailed switch specifications and dimensions.
*2 : Switches other than the above models, such as switches with connectors, are also available. Refer to Ending Page 1.
*3 : The max. load current is 20 mA at 25°C. The current is lower than 20 mA if the operating ambient temperature around the switch is higher than 25˚C. (5 to 10 mA at 60°C)
*4 : Switch for AC magnetic field (T2YD/T2YDT) cannot be used in DC magnetic field.

Cylinder weight table (the weight of the switches is when there are 2 cylinder switches.)

(Unit: g)

Stroke (mm)	5		10		15		20		25		30		40		50	
Bore size (mm)	No switch	Switch	No switch	Switch	No switch	Switch	No switch	Switch	No switch	Switch	No switch	Switch	No switch	Switch	No switch	Switch
ø20	95	150	107	182	120	195	133	208	145	220	158	233	183	258	208	283
ø25	131	222	146	237	162	253	178	269	194	285	209	300	241	332	272	363
ø32	185	299	207	321	229	343	251	365	272	386	294	408	338	452	381	495
ø40	269	412	296	439	322	465	349	492	376	519	402	545	455	598	508	651
ø50	434	628	476	670	518	712	560	754	602	796	645	839	729	923	813	1007
ø63	648	927	703	982	-	-	813	1092	-	-	923	1202	1074	1313	1144	1423
ø80	1153	1566	1240	1653	-	-	1413	1826	-	-	1586	1990	1760	2173	1933	2346
ø100	1765	2332	1879	2446	-	-	2106	2673	-	-	2334	2901	2561	3128	2789	3356

Theoretical thrust table

(Unit: N)

Bore size (mm)	Operating direction	Working pressure MPa									
		0.15	0.2	0.3	0.4	0.5	0.6	0.7	0.8	0.9	1.0
ø20	Push	-	62.8	94.2	$1.26x10^2$	$1.57x10^2$	$1.88x10^2$	$2.20x10^2$	$2.51x10^2$	$2.83x10^2$	$3.14x10^2$
	Pull	-	47.1	70.7	94.2	$1.18x10^2$	$1.41x10^2$	$1.65x10^2$	$1.88x10^2$	$2.12x10^2$	$2.36x10^2$
ø25	Push	-	98.2	$1.47x10^2$	$1.96x10^2$	$2.45x10^2$	$2.95x10^2$	$3.44x10^2$	$3.93x10^2$	$4.42x10^2$	$4.91x10^2$
	Pull	-	75.6	$1.13x10^2$	$1.51x10^2$	$1.89x10^2$	$2.27x10^2$	$2.64x10^2$	$3.02x10^2$	$3.40x10^2$	$3.78x10^2$
ø32	Push	-	$1.61x10^2$	$2.41x10^2$	$3.22x10^2$	$4.02x10^2$	$4.83x10^2$	$5.63x10^2$	$6.43x10^2$	$7.24x10^2$	$8.04x10^2$
	Pull	-	$1.21x10^2$	$1.81x10^2$	$2.41x10^2$	$3.02x10^2$	$3.62x10^2$	$4.22x10^2$	$4.83x10^2$	$5.43x10^2$	$6.03x10^2$
ø40	Push	-	$2.51x10^2$	$3.77x10^2$	$5.03x10^2$	$6.28x10^2$	$7.54x10^2$	$8.80x10^2$	$1.01x10^3$	$1.13x10^3$	$1.26x10^3$
	Pull	-	$2.11x10^2$	$3.17x10^2$	$4.22x10^2$	$5.28x10^2$	$6.33x10^2$	$7.39x10^2$	$8.44x10^2$	$9.50x10^2$	$1.06x10^3$
ø50	Push	-	$3.93x10^2$	$5.89x10^2$	$7.85x10^2$	$9.82x10^2$	$1.18x10^3$	$1.37x10^3$	$1.57x10^3$	$1.77x10^3$	$1.96x10^3$
	Pull	-	$3.30x10^2$	$4.95x10^2$	$6.60x10^2$	$8.25x10^2$	$9.90x10^2$	$1.15x10^3$	$1.32x10^3$	$1.48x10^3$	$1.65x10^3$
ø63	Push	$4.68x10^2$	$6.23x10^2$	$9.35x10^2$	$1.25x10^3$	$1.56x10^3$	$1.87x10^3$	$2.18x10^3$	$2.49x10^3$	$2.81x10^3$	$3.12x10^3$
	Pull	$4.20x10^2$	$5.61x10^2$	$8.41x10^2$	$1.12x10^3$	$1.40x10^3$	$1.68x10^3$	$1.96x10^3$	$2.24x10^3$	$2.52x10^3$	$2.80x10^3$
ø80	Push	$7.54x10^2$	$1.01x10^3$	$1.51x10^3$	$2.01x10^3$	$2.51x10^3$	$3.02x10^3$	$3.52x10^3$	$4.02x10^3$	$4.52x10^3$	$5.03x10^3$
	Pull	$6.80x10^2$	$9.07x10^2$	$1.36x10^3$	$1.81x10^3$	$2.27x10^3$	$2.72x10^3$	$3.17x10^3$	$3.63x10^3$	$4.08x10^3$	$4.54x10^3$
ø100	Push	$1.18x10^3$	$1.57x10^3$	$2.36x10^3$	$3.14x10^3$	$3.93x10^3$	$4.71x10^3$	$5.50x10^3$	$6.28x10^3$	$7.07x10^3$	$7.85x10^3$
	Pull	$1.07x10^3$	$1.43x10^3$	$2.14x10^3$	$2.86x10^3$	$3.57x10^3$	$4.29x10^3$	$5.00x10^3$	$5.72x10^3$	$6.43x10^3$	$7.15x10^3$

SCP*3
CMK2
CMA2
SCM
SCG
SCA2
SCS2
CKV2
CAV2/COVP/N2
SSD2
SSG
SSD
CAT
MDC2
MVC
SMG
MSD/MSDG
FC*
STK
SRL3
SRG3
SRM3
SRT3
MRL2
MRG2
SM-25
ShkAbs
FJ
FK
Spd Contr
Ending

How to order

No switch (without magnet for switch)

SSD-G5 - 20 ◯ - 5 ———— N - LB - I

With switch (built-in magnet for switch)

SSD-G5L - 20 ◯ - 5 - T0H - R - N - LB - I

Ⓐ Model No.
Ⓑ Bore size
Ⓒ Port thread
Ⓓ Stroke
Ⓔ Switch model No. *1 *4
Ⓕ Switch quantity
Ⓖ Option
Ⓗ Mounting bracket *2
Ⓘ Accessory *3

Precautions for model No. selection

1 : T8 switch cannot be installed on ø20 to ø32.
*2 : The mounting bracket is included at shipment.
WF and wf dimensions of cylinders for "LB2" and "FA" are set 10 mm longer than those of the standard.
Contact CKD for the cylinder model No. when individually ordering cylinders, LB2 brackets and FA brackets.
*3 : "I" and "Y" cannot be selected together.
*4 : Switches are shipped with the product. Contact CKD if assembling before shipment is necessary.

[Example of model No.]

SSD-G5L-32-5-T0H-R-N-LB-I

Model: Compact cylinder double acting single rod/environment-resistant scraper

Ⓑ Bore size	: ø32 mm
Ⓒ Port thread	: Type of Rc thread
Ⓓ Stroke	: 5 mm
Ⓔ Switch model No.	: Reed switch T0H Lead wire length 1 m
Ⓕ Switch quantity	: 1 on rod side
Ⓖ Option	: Rod end male thread
Ⓗ Mounting bracket	: Axial foot
Ⓘ Accessory	: Rod eye

Code	Description
Ⓐ Model No.	
SSD-G5	Double acting/single rod/environment-resistant scraper
SSD-G5L	Double acting/single rod/environment-resistant scraper/with switch
Ⓑ Bore size (mm)	
20	ø20
25	ø25
32	ø32
40	ø40
50	ø50
63	ø63
80	ø80
100	ø100
Ⓒ Port thread	
Blank	Rc thread/M5 thread
NN	NPT thread (ø32 and over) (made-to-order product)
GN	G thread (ø32 and over) (made-to-order product)
Ⓓ Stroke (mm)	
Refer to the stroke table on the following page.	

Ⓔ Switch model No.

Axial lead wire	Radial lead wire	Contact	Voltage AC	Voltage DC	Indicator	Lead wire
TOH*	T0V*	Reed	●	●	1-color LED	2-wire
T5H*	T5V*		●	●	No indicator lamp	
T8H*	T8V*		●	●	1-color LED	
T1H*	T1V*	Prox.	●		1-color LED	2-wire
T2H*	T2V*			●		
T3H*	T3V*			●		3-wire
T3PH*	T3PV*			●	1-color LED (PNP output)	
T2WH*	T2WV*			●	2-color LED	2-wire
T2YH*	T2YV*			●		
T3WH*	T3WV*			●		3-wire
T3YH*	T3YV*			●		
T2JH*	T2JV*			●	1-color LED off-delay	2-wire
T2YD*	-			●	2-color LED for AC magnetic field	2-wire
T2YDT*	-			●		

*** Lead wire length**	
Blank	1 m (standard)
3	3 m (option)
5	5 m (option)
Ⓕ Switch quantity	
R	1 on rod side
H	1 on head side
D	2
Ⓖ Option	
Blank	Rod end female thread
N	Rod end male thread
Ⓗ Mounting bracket	
LB	Axial foot
LB2	Axial foot (compact)
CB	Clevis bracket (pin and snap ring included)
CB2	Clevis bracket (compact) (pin and snap ring included)
FA	Rod side flange
FB	Head side flange
Ⓘ Accessory (available when rod end male thread "N" is selected)	
I	Rod eye
I2	Rod eye (compact)
Y	Rod clevis (pin and snap ring included)
Y2	Rod clevis (compact) (pin and snap ring included)

[Stroke table]

Stroke (mm)		Applicable bore size							
		ø20	ø25	ø32	ø40	ø50	ø63	ø80	ø100
Standard stroke	5	●	●	●	●	●	●	●	●
	10	●	●	●	●	●	●	●	●
	15	●	●	●	●	●			
	20	●	●	●	●	●	●	●	●
	25	●	●	●	●	●			
	30	●	●	●	●	●	●	●	●
	40	●	●	●	●	●	●	●	●
	50	●	●	●	●	●	●	●	●
	60								
	70								
	80								
	90								
	100								
Min. stroke (mm) *1		1							
Max. stroke (mm)		50							
Custom stroke *2		In 1 mm increments							

If the standard stroke is exceeded, the high load (K) is used. Refer to page 1280 for specifications, and pages 1286 and 1287 for dimensions.

1: Less than 5 mm for 1-color LED switch and less than 10 mm for the 2-color LED, off-delay, AC magnetic field proof, T1 or T8* switch are not available.
Refer to page 1272 for the number of installed switches and the min. stroke.
*2: The total length when using a custom stroke is the same as that when using the next longer standard stroke.
*3: Refer to pages 1320 and 1321 for the min. stroke with mounting brackets LB and LB2.

How to order switch

SW - T0H

Switch model No.
(Item Ⓔ on page 1274)

How to order mounting bracket

Bore size (mm) / Mounting bracket	ø20	ø25	ø32	ø40	ø50	ø63	ø80	ø100
Foot (LB)	SSD-LB-20	SSD-LB-25	SSD-LB-32	SSD-LB-40	SSD-LB-50	SSD-LB-63	SSD-LB-80	SSD-LB-100
Foot (LB2)	SSD-LB2-20	SSD-LB2-25	SSD-LB2-32	SSD-LB2-40	SSD-LB2-50	SSD-LB2-63	SSD-LB2-80	SSD-LB2-100
Flange (FA/FB)	SSD-FA-20	SSD-FA-25	SSD-FA-32	SSD-FA-40	SSD-FA-50	SSD-FA-63	SSD-FA-80	SSD-FA-100
Clevis bracket (CB)	SSD-CB-20	SSD-CB-25	SSD-CB-32	SSD-CB-40	SSD-CB-50	SSD-CB-63	SSD-CB-80	SSD-CB-100
Clevis bracket (CB2)	SSD-CB2-20	SSD-CB2-25	SSD-CB2-32	SSD-CB2-40	SSD-CB2-50	SSD-CB2-63	SSD-CB2-80	SSD-CB2-100

*1: The foot mounting bracket is provided as 2 pcs./set.

Internal structure and parts list

● SSD-G5L-20/25 (double acting/environment-resistant scraper/ with switch)

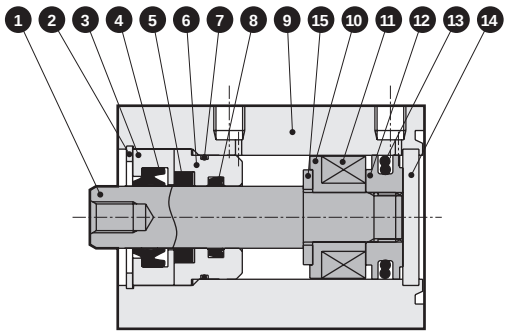

● SSD-G5L-32 to 50 (double acting/environment-resistant scraper/ with switch)

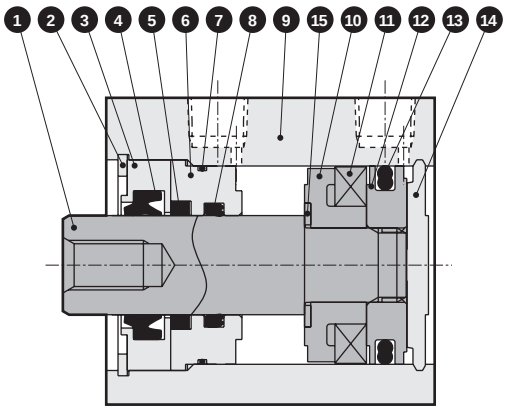

● SSD-G5-20/25 (double acting/environment-resistant scraper)

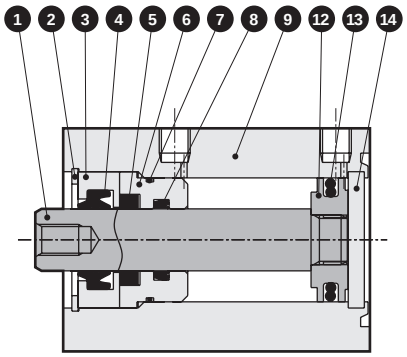

● SSD-G5-32 to 50 (double acting/environment-resistant scraper)

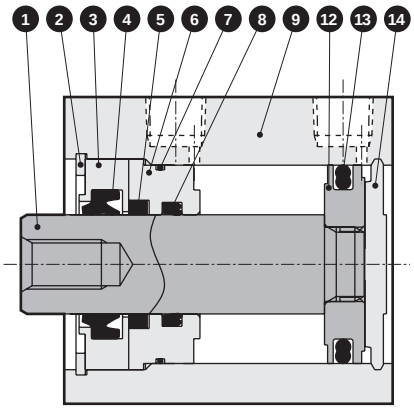

Main parts list

Part No.	Part name	Material	Remarks	Part No.	Part name	Material	Remarks
1	Piston rod	ø20/ø25: Stainless steel	Industrial chrome plating	9	Body	Aluminum alloy	Hard alumite
		ø32 to ø50: Steel		10	Spacer	Special resin	
2	C-snap ring	Steel	Zinc phosphate	11	Magnet	Plastic	
3	Rod metal 1	Special aluminum	Chromate	12	Piston	Aluminum alloy	Chromate
4	Scraper	Nitrile rubber		13	Piston packing	Nitrile rubber	
5	Lube keeping structure	Special rubber		14	Cover	ø20/ø25: Stainless steel	ø32 to ø50: Alumite
6	Rod metal 2	Special aluminum	Alumite			ø32 to ø50: Aluminum alloy	
7	Rod metal gasket	Nitrile rubber		15	Spacer washer	Stainless steel	
8	Rod packing	Nitrile rubber					

Consumable parts list

Part name / Bore size (mm)	Kit No.	Consumable parts No.
ø20	**SSD-G5-20K**	4 5 7 8 13
ø25	**SSD-G5-25K**	
ø32	**SSD-G5-32K**	
ø40	**SSD-G5-40K**	
ø50	**SSD-G5-50K**	

Internal structure and parts list

● SSD-G5L-63 to 100 (double acting/environment-resistant scraper/with switch)

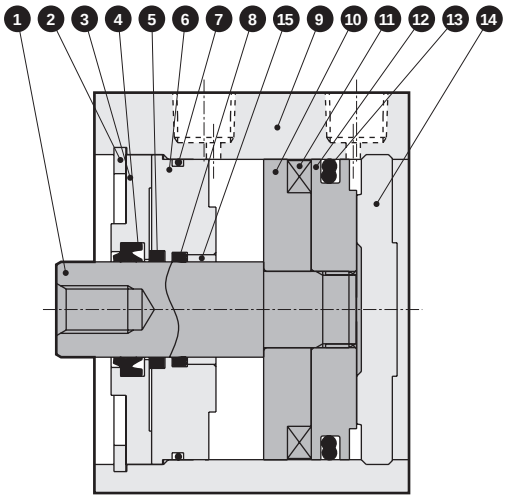

● SSD-G5-63 to 100 (double acting/environment-resistant scraper)

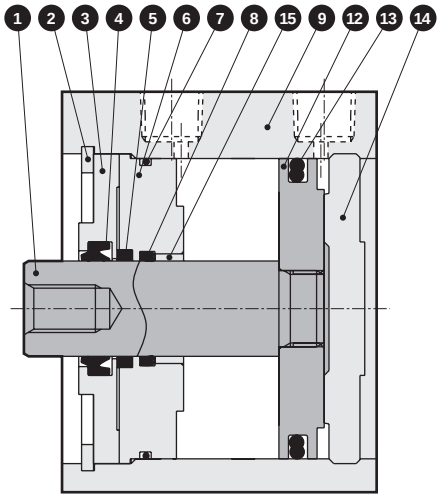

Main parts list

Part No.	Part name	Material	Remarks	Part No.	Part name	Material	Remarks
1	Piston rod	Steel	Industrial chrome plating	9	Body	Aluminum alloy	Hard alumite
2	C-snap ring	Steel	Zinc phosphate	10	Spacer	Aluminum alloy	Chromate
3	Rod metal 1	Aluminum alloy	Chromate	11	Magnet	Plastic	
4	Scraper	Nitrile rubber		12	Piston	Aluminum alloy	Chromate
5	Lube keeping structure	Special rubber		13	Piston packing	Nitrile rubber	
6	Rod metal 2	Aluminum alloy	Chromate	14	Cover	Aluminum alloy	Alumite
7	Rod metal gasket	Nitrile rubber		15	Bush	Dry bearing	
8	Rod packing	Nitrile rubber					

Consumable parts list

Part name / Bore size (mm)	Kit No.	Consumable parts No.
ø63	SSD-G5-63K	4 5 7 8 13
ø80	SSD-G5-80K	
ø100	SSD-G5-100K	

SCP*3
CMK2
CMA2
SCM
SCG
SCA2
SCS2
CKV2
CAV2/COVP/N2
SSD2
SSG
SSD
CAT
MDC2
MVC
SMG
MSD/MSDG
FC*
STK
SRL3
SRG3
SRM3
SRT3
MRL2
MRG2
SM-25
ShkAbs
FJ
FK
Spd Contr
Ending

dimensions

● SSD-G5L-20, 25 (with switch)

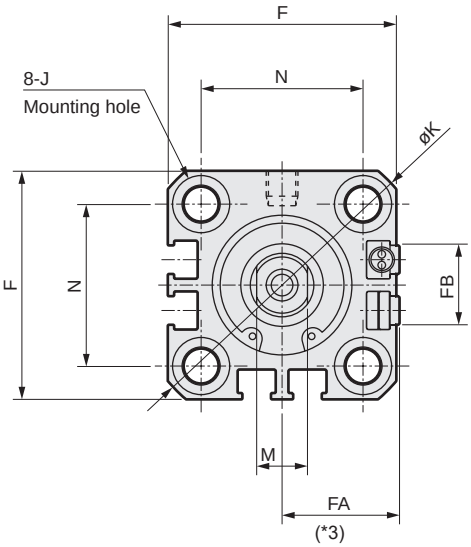

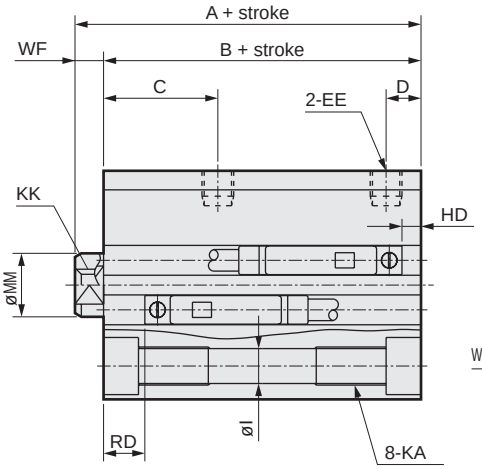

● Rod end male thread

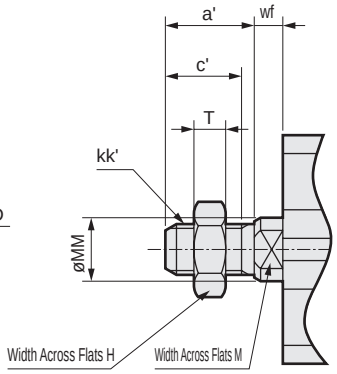

Code / Bore size	No switch		Common dimensions with switch							
	A*1	B*1	A*1	B*1	C	D	EE	F	FA*3	FB
ø20	34	29.5	44	39.5	18	5.5	M5	36	18.5(22)	12.5
ø25	37.5	32.5	47.5	42.5	21	6	M5	40	20.5(24)	13.5

Code / Bore size	Common dimensions with switch								
	I	J	K	KA	KK	M	MM	N	WF
ø20	5.5	9 spot face depth 5.5	47	M6 depth 11	M5 depth 7	8	10	25.5	4.5
ø25	5.5	9 spot face depth 5.5	51	M6 depth 11	M6 depth 11	10	12	28	5

Switch dimensions / Bore size	Reed/proximity 1-color		Proximity 2-color	
	HD	RD	HD	RD
ø20	3	16.5	1.5	15
ø25	3	19.5	1.5	18

*1: To calculate A + stroke or B + stroke when using custom stroke, apply the next longer standard stroke (instead of the custom stroke) to the stroke value. (Example) If the custom stroke is 7 mm, apply the standard stroke of 10 mm.
*2: HD and RD dimensions for 5 mm stroke differ from these dimensions according to the setting.
*3: Dimensions in ( ) of FA are for the L-shaped lead wire type.
***4: Refer to pages 1320 to 1325 for dimensions including the accessories and pages 1108 to 1115 for dimensions of individual accessories.**

Rod end male thread

Code / Bore size	a'	c'	H	kk'	M	MM	T	wf
ø20	14	12	13	M8	8	10	5	4.5
ø25	17.5	15	17	M 10 x 1.25	10	12	6	5

dimensions

● SSD-G5L-32 to 100 (with switch)

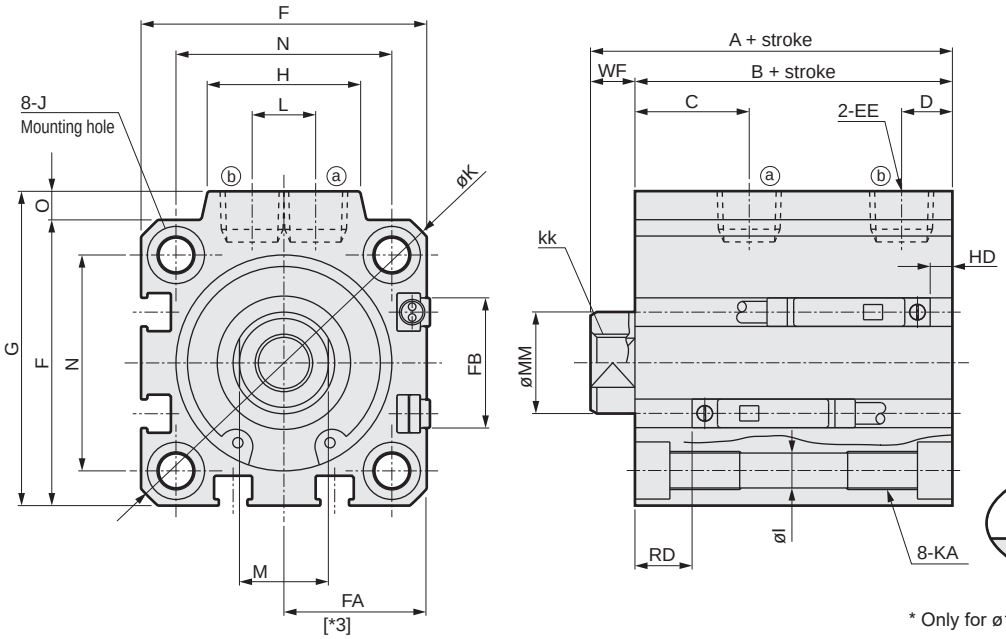

● Rod end male thread

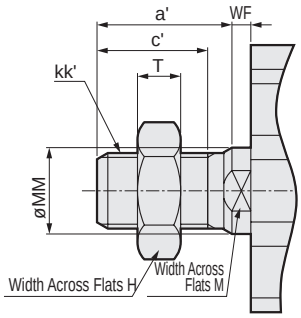

[Bore size ø100]

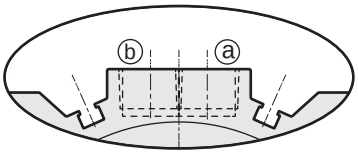

* Only for ø100, the port surface has switch grooves.

Code / Bore size	No switch A*1	No switch B*1	Common dimensions with switch A*1	B*1	C	D	EE	F	FA*3	FB	G	H
ø32	40	33	50	43	18	8	Rc1/8	45	23 (26.5)	20.5	49.5	24
ø40	46.5	39.5	56.5	49.5	22	8.5	Rc1/8	52	26.5(30)	27.5	57	24
ø50	48.5	40.5	58.5	50.5	20.5	10.5	Rc1/4	64	32.5(36)	28.5	71	33
ø63	54	46	64	56	23	11	Rc1/4	77	39 (42.5)	28.5	84	33
ø80	63.5	53.5	73.5	63.5	26	13	Rc3/8	98	49.5(53)	28.5	104	38
ø100	75	63	85	73	33	15	Rc3/8	117	59 (62.5)	28.5	123.5	38

Code / Bore size	Common dimensions with switch I	J	K	KA	KK	L	M	MM	N	O	WF
ø32	5.5	9 spot face depth 5.5	60	M6 depth 11	M8 depth 13	10	14	16	34	4.5	7
ø40	5.5	9 spot face depth 5.5	69	M6 depth 11	M8 depth 13	10	14	16	40	5	7
ø50	6.9	11 spot face depth 6.5	86	M8 depth 13	M10 depth 15	15	17	20	50	7	8
ø63	8.7	14 spot face depth 9	103	M10 depth 25	M10 depth 15	15	17	20	60	7	8
ø80	10.5	17.5 spot face depth 11	132	M12 depth 28	M16 depth 21	15	22	25	77	6	10
ø100	10.5	17.5 spot face depth 11	156	M12 depth 29	M20 depth 27	15	27	30	94	6.5	12

Switch dimensions / Bore size	Reed/proximity 1-color HD	Reed/proximity 1-color RD	Proximity 2-color HD	Proximity 2-color RD	T8H/V switch HD	T8H/V switch RD
ø32	3.5	19	2	17.5	-	-
ø40	7	22	5.5	20.5	1	16
ø50	7.5	22.5	6	21	1.5	16.5
ø63	12.5	23	11	21.5	6.5	17
ø80	17.5	25.5	16	24	11.5	19.5
ø100	22	30.5	21.5	28	7	23.5

*1: To calculate A + stroke or B + stroke when using custom stroke, apply the next longer standard stroke (instead of the custom stroke) to the stroke value. (Example) If the custom stroke is 7 mm, apply the standard stroke of 10 mm.
*2: HD and RD dimensions for 5 mm stroke differ from these dimensions according to the setting.
*3: Dimensions in ( ) of FA are for the L-shaped lead wire type.

Rod end male thread

Code / Bore size	a'	c'	H	kk'	M	MM	T	wf
ø32	23.5	20.5	22	M 14 x 1.5	14	16	8	5
ø40	23.5	20.5	22	M 14 x 1.5	14	16	8	5
ø50	28.5	26	27	M 18 x 1.5	17	20	11	5
ø63	28.5	26	27	M 18 x 1.5	17	20	11	5
ø80	35.5	32.5	32	M 22 x 1.5	22	25	13	8
ø100	35.5	32.5	41	M 26 x 1.5	27	30	16	8

* Refer to pages 1320 to 1325 for dimensions including the accessories and pages 1108 to 1115 for dimensions of individual accessories.

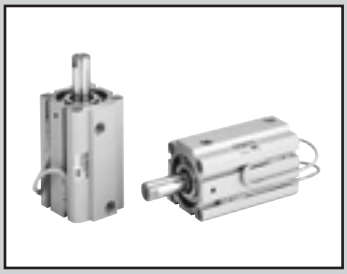

Compact cylinder, double acting/single rod/high load/environment-resistant scraper

SSD-KG5 Series

● Bore size: ø20/ø25/ø32/ø40/ø50/ø63/ø80/ø100

JIS symbol

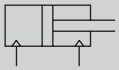

RoHS

Specifications

Item		SSD-KG5 SSD-KG5L (with switch)							
Bore size	mm	ø20	ø25	ø32	ø40	ø50	ø63	ø80	ø100
Actuation		Double acting							
Working fluid		Compressed air							
Max. working pressure	MPa	1.0 (≈150 psi, 10 bar)							
Min. working pressure	MPa	0.2 (≈29 psi, 2 bar)					0.15 (≈22 psi, 2 bar)		
Proof pressure	MPa	1.6 (≈230 psi, 16 bar)							
Ambient temperature	°C	-10 (14°F) to 60 (140°F) (no freezing)							
Port size		M5		Rc1/8		Rc1/4		Rc3/8	
Stroke tolerance	mm	+2.0 0							
Working piston speed	mm/s	50 to 500					50 to 300		
Cushion		Rubber cushion							
Lubrication		Not required (use turbine oil class 1 ISO VG32 if necessary for lubrication)							
Allowable absorbed energy	J	0.16	0.16	0.40	0.63	0.98	1.56	2.51	3.92

Stroke

Bore size (mm)	Standard stroke (mm)	Max. stroke (mm)	Min. stroke (mm)
ø20	5, 10, 15, 20, 25, 30, 40, 50	200 *2	1
ø25	10, 15, 20, 25, 30, 40, 50, 60, 70, 80, 90, 100	300	
ø32			
ø40			
ø50			
ø63	10, 20, 30, 40, 50, 60, 70, 80, 90, 100		
ø80			
ø100		*2	

*1 : The custom stroke is available in 1mm increments. However, the total length is the same as that of the next longer standard stroke.
*2 : Stroke over standard to maximum is available in increments of 10.
*3 : From 101 to 200 for ø20, 151 to 300 for ø25 to ø50, or 201 to 300 for ø63 to ø100, internal structure and total length are different in some products.
*4 : For the type with switch, refer to the table below of installed switch numbers and minimum stroke.

Number of installed switches and min. stroke (mm)

Switch quantity	1	2	3	4	5
Switch model No. / Bore size (mm)	T*	T*	T*	T*	T*
ø20	5	5	35	50	65
ø25	5	5	35	50	65
ø32	5	5	35	50	65
ø40	5	5	35	50	65
ø50	5	5	35	50	65
ø63	5	5	35	50	65
ø80	5	5	35	50	65
ø100	5	5	35	50	65

Note: Less than 10 mm with the 2-color LED, off-delay, AC magnetic field proof, T1* or T8* switch is not available.

Switch specifications

●1-color/2-color LED/for AC magnetic field

Item	2-wire proximity	2-wire proximity			3-wire proximity				2-wire reed							2-wire proximity
	T1H/ T1V	T2H/T2V/ T2JH/T2JV	T2YH/ T2YV	T2WH/ T2WV	T3H/ T3V	T3PH/ T3PV	T3YH/ T3YV	T3WH/ T3WV	T0H/T0V		T5H/T5V		T8H/T8V			T2YD (*4) T2YDT
Applications	For programmable controller, relay, compact solenoid valve	Dedicated for programmable controller			For programmable controller, relay				For programmable controller, relay		For programmable controller, relay (no lamp), serial		For programmable controller, relay			Dedicated for programmable controller
Output method	-				NPN output	PNP output	NPN output	NPN output	-							
Pwr. supp. V.	-				10 to 28 VDC				-							
Load voltage	85 to 265 VAC	10 to 30 VDC		24 VDC ±10%	30 VDC or less				12/24 VDC	100/110 VAC	5/12/24 VDC	100/110 VAC	12/24 VDC	110 VAC	220 VAC	24 VDC ±10%
Load current	5 to 100 mA	5 to 20 mA (*3)			100 mA or less		50 mA or less		5 to 50 mA	7 to 20 mA	50 mA or less	20 mA or less	5 to 50 mA	7 to 20 mA	7 to 10 mA	5 to 20 mA
Indicator	LED (Lit when ON)	LED (Lit when ON)	Red/green LED (Lit when ON)	Red/green LED (Lit when ON)	LED (Lit when ON)	Yellow LED (Lit when ON)	Red/green LED (Lit when ON)	Red/green LED (Lit when ON)	LED (Lit when ON)		No indicator lamp		LED (Lit when ON)			Red/green LED (Lit when ON)
Leakage current	≤ 1 mA at 100 VAC, ≤ 2 mA at 200 VAC	1 mA or less			10 μA or less				0 mA							1 mA or less
Weight g	1 m:33 3 m:87 5 m:142	1 m:18 3 m:49 5 m:80	1 m:33 3 m:87 5 m:142	1 m:18 3 m:49 5 m:80	1 m:18 3 m:49 5 m:80		1 m:33 3 m:87 5 m:142	1 m:18 3 m:49 5 m:80	1 m:18 3 m:49 5 m:80				1 m:33 3 m:87 5 m:142			1 m:61 3 m:166 5 m:272

*1 : Refer to Ending Page 1 for detailed switch specifications and dimensions.
*2 : Switches other than the above models, such as switches with connectors, are also available. Refer to Ending Page 1.
*3 : The max. load current is 20 mA at 25°C. The current is lower than 20 mA if the operating ambient temperature around the switch is higher than 25˚C. (5 to 10 mA at 60°C)
*4 : Switch for AC magnetic field (T2YD/T2YDT) cannot be used in DC magnetic field.

Theoretical thrust table

(Unit: N)

Bore size (mm)	Operating direction	Working pressure MPa									
		0.15	0.2	0.3	0.4	0.5	0.6	0.7	0.8	0.9	1.0
ø20	Push	-	62.8	94.2	$1.26x10^2$	$1.57x10^2$	$1.88x10^2$	$2.20x10^2$	$2.51x10^2$	$2.83x10^2$	$3.14x10^2$
	Pull	-	47.1	70.7	94.2	$1.18x10^2$	$1.41x10^2$	$1.65x10^2$	$1.88x10^2$	$2.12x10^2$	$2.36x10^2$
ø25	Push	-	98.2	$1.47x10^2$	$1.96x10^2$	$2.45x10^2$	$2.95x10^2$	$3.44x10^2$	$3.93x10^2$	$4.42x10^2$	$4.91x10^2$
	Pull	-	75.6	$1.13x10^2$	$1.51x10^2$	$1.89x10^2$	$2.27x10^2$	$2.64x10^2$	$3.02x10^2$	$3.40x10^2$	$3.78x10^2$
ø32	Push	-	$1.61x10^2$	$2.41x10^2$	$3.22x10^2$	$4.02x10^2$	$4.83x10^2$	$5.63x10^2$	$6.43x10^2$	$7.24x10^2$	$8.04x10^2$
	Pull	-	$1.21x10^2$	$1.81x10^2$	$2.41x10^2$	$3.02x10^2$	$3.62x10^2$	$4.22x10^2$	$4.83x10^2$	$5.43x10^2$	$6.03x10^2$
ø40	Push	-	$2.51x10^2$	$3.77x10^2$	$5.03x10^2$	$6.28x10^2$	$7.54x10^2$	$8.80x10^2$	$1.01x10^3$	$1.13x10^3$	$1.26x10^3$
	Pull	-	$2.11x10^2$	$3.17x10^2$	$4.22x10^2$	$5.28x10^2$	$6.33x10^2$	$7.39x10^2$	$8.44x10^2$	$9.50x10^2$	$1.06x10^3$
ø50	Push	-	$3.93x10^2$	$5.89x10^2$	$7.85x10^2$	$9.82x10^2$	$1.18x10^3$	$1.37x10^3$	$1.57x10^3$	$1.77x10^3$	$1.96x10^3$
	Pull	-	$3.30x10^2$	$4.95x10^2$	$6.60x10^2$	$8.25x10^2$	$9.90x10^2$	$1.15x10^3$	$1.32x10^3$	$1.48x10^3$	$1.65x10^3$
ø63	Push	$4.68x10^2$	$6.23x10^2$	$9.35x10^2$	$1.25x10^3$	$1.56x10^3$	$1.87x10^3$	$2.18x10^3$	$2.49x10^3$	$2.81x10^3$	$3.12x10^3$
	Pull	$4.20x10^2$	$5.61x10^2$	$8.41x10^2$	$1.12x10^3$	$1.40x10^3$	$1.68x10^3$	$1.96x10^3$	$2.24x10^3$	$2.52x10^3$	$2.80x10^3$
ø80	Push	$7.54x10^2$	$1.01x10^3$	$1.51x10^3$	$2.01x10^3$	$2.51x10^3$	$3.02x10^3$	$3.52x10^3$	$4.02x10^3$	$4.52x10^3$	$5.03x10^3$
	Pull	$6.80x10^2$	$9.07x10^2$	$1.36x10^3$	$1.81x10^3$	$2.27x10^3$	$2.72x10^3$	$3.17x10^3$	$3.63x10^3$	$4.08x10^3$	$4.54x10^3$
ø100	Push	$1.18x10^3$	$1.57x10^3$	$2.36x10^3$	$3.14x10^3$	$3.93x10^3$	$4.71x10^3$	$5.50x10^3$	$6.28x10^3$	$7.07x10^3$	$7.85x10^3$
	Pull	$1.07x10^3$	$1.43x10^3$	$2.14x10^3$	$2.86x10^3$	$3.57x10^3$	$4.29x10^3$	$5.00x10^3$	$5.72x10^3$	$6.43x10^3$	$7.15x10^3$

SCP*3
CMK2
CMA2
SCM
SCG
SCA2
SCS2
CKV2
CAV2/COVP/N2
SSD2
SSG
SSD
CAT
MDC2
MVC
SMG
MSD/MSDG
FC*
STK
SRL3
SRG3
SRM3
SRT3
MRL2
MRG2
SM-25
ShkAbs
FJ
FK
Spd Contr
Ending

How to order

No switch (without magnet for switch)

SSD-KG5 - 20 ◯ - 5 ——— N - LB - I

With switch (built-in magnet for switch)

SSD-KG5L - 20 ◯ - 5 - T0H - R - N - LB - I

Ⓐ Model No.
Ⓑ Bore size
Ⓒ Port thread
Ⓓ Stroke
Ⓔ Switch model No. *4
Ⓕ Switch quantity
Ⓖ Option
Ⓗ Mounting bracket *1 *2
Ⓘ Accessory *3

Precautions for model No. selection

*1 : The mounting bracket is included at shipment.
*2 : WF and wf dimensions of cylinders for "LB2" and "FA" are set 10 mm longer than those of the standard. Contact CKD for the cylinder model No. when individually ordering cylinders, LB2 brackets and FA brackets.
*3 : "I" and "Y" cannot be selected together.
*4 : Switches are shipped with the product. Contact CKD if assembling before shipment is necessary.

[Example of model No.]

SSD-KG5L-32-5-T0H-R-N

Model: Compact cylinder double acting single rod/high load/environment-resistant scraper

Ⓑ Bore size	: ø32 mm
Ⓒ Port thread	: Rc thread
Ⓓ Stroke	: 5 mm
Ⓔ Switch model No.	: Reed switch T0H lead wire 1 m
Ⓕ Switch quantity	: 1 on rod side
Ⓖ Option	: Rod end male thread

Code	Description
Ⓐ Model No.	
SSD-KG5	Double acting/single rod/high load/environment-resistant scraper
SSD-KG5L	Double acting/single rod/high load/environment-resistant scraper/switch
Ⓑ Bore size (mm)	
20	ø20
25	ø25
32	ø32
40	ø40
50	ø50
63	ø63
80	ø80
100	ø100
Ⓒ Port thread	
Blank	Rc thread/M5 thread
NN	NPT thread (ø32 and over) (made-to-order product)
GN	G thread (ø32 and over) (made-to-order product)
Ⓓ Stroke (mm)	
Refer to the stroke table on the following page.	

Ⓔ Switch model No.

Axial lead wire	Radial lead wire	Contact	Voltage AC	Voltage DC	Indicator	Lead wire
TOH*	T0V*	Reed	●	●	1-color LED	2-wire
T5H*	T5V*	Reed	●	●	No indicator lamp	2-wire
T8H*	T8V*	Reed	●	●	1-color LED	2-wire
T1H*	T1V*	Prox.	●		1-color LED	2-wire
T2H*	T2V*	Prox.		●	1-color LED	2-wire
T3H*	T3V*	Prox.		●	1-color LED	3-wire
T3PH*	T3PV*	Prox.		●	1-color LED (PNP output)	3-wire
T2WH*	T2WV*	Prox.		●	2-color LED	2-wire
T2YH*	T2YV*	Prox.		●	2-color LED	2-wire
T3WH*	T3WV*	Prox.		●	2-color LED	3-wire
T3YH*	T3YV*	Prox.		●	2-color LED	3-wire
T2JH*	T2JV*	Prox.		●	1-color LED off-delay	2-wire
T2YD*	-	Prox.		●	2-color LED for AC magnetic field	2-wire
T2YDT*	-	Prox.		●	2-color LED for AC magnetic field	2-wire

*** Lead wire length**	
Blank	1 m (standard)
3	3 m (option)
5	5 m (option)
Ⓕ Switch quantity	
R	1 on rod side
H	1 on head side
D	2
Ⓖ Option	
Blank	Rod end female thread
N	Rod end male thread
Ⓗ Mounting bracket	
LB	Axial foot
LB2	Axial foot (compact)
CB	Clevis bracket (pin and snap ring included)
CB2	Clevis bracket (compact) (pin and snap ring included)
FA	Rod side flange
FB	Head side flange
Ⓘ Accessory (available when rod end male thread "N" is selected)	
I	Rod eye
I2	Rod eye (compact)
Y	Rod clevis (pin and snap ring included)
Y2	Rod clevis (compact) (pin and snap ring included)

[Stroke table]

Stroke (mm)		Applicable bore size							
		ø20	ø25	ø32	ø40	ø50	ø63	ø80	ø100
Standard stroke	5	●							
	10	●	●	●	●	●	●	●	●
	15	●	●	●	●	●			
	20	●	●	●	●	●	●	●	●
	25	●	●	●	●	●			
	30	●	●	●	●	●	●	●	●
	40	●	●	●	●	●	●	●	●
	50	●	●	●	●	●	●	●	●
	60		●	●	●	●	●	●	●
	70		●	●	●	●	●	●	●
	80		●	●	●	●	●	●	●
	90		●	●	●	●	●	●	●
	100		●	●	●	●	●	●	●
Min. stroke (mm) *1		1							
Max. stroke (mm)		200	300						
Custom stroke *2		In 1 mm increments							

1: Less than 5 mm for 1-color LED switch and less than 10 mm for the 2-color LED, off-delay, AC magnetic field proof, T1 or T8* switch are not available.
Refer to page 1280 for the number of installed switches and the min. stroke.
*2: The total length is the same as that of the next longer standard stroke.

How to order switch

SW - T0H

Switch model No.
(Item Ⓔ on page 1282)

Cylinder weight table (the weight of the switches is when there are 2 cylinder switches.)

(Unit: g)

Stroke (mm)	5		10		15		20		25		30		40		50		60		70		80		90		100	
Bore size (mm)	No switch	Switch	No switch	Switch	No switch	Switch	No switch	Switch	No switch	Switch	No switch	Switch	No switch	Switch	No switch	Switch	No switch	Switch	No switch	Switch	No switch	Switch	No switch	Switch	No switch	Switch
ø20	107	182	120	195	133	208	145	220	158	233	170	245	195	270	220	295	245	320	270	345	295	370	320	395	345	420
ø25	-	-	162	253	178	269	194	285	209	300	226	317	258	349	290	381	322	413	354	445	386	477	418	509	450	541
ø32	-	-	251	365	272	386	294	408	316	430	338	452	381	495	424	538	467	581	510	624	553	667	596	710	639	753
ø40	-	-	349	492	376	519	402	545	428	571	455	598	508	651	561	704	614	757	667	810	720	863	773	916	826	969
ø50	-	-	560	754	602	796	645	839	688	882	729	923	813	1007	897	1091	981	1175	1065	1259	1149	1343	1233	1427	1317	1481
ø63	-	-	813	1092	-	-	923	1202	-	-	1034	1313	1144	1423	1254	1533	1364	1643	1474	1753	1584	1863	1694	1973	1804	2083
ø80	-	-	1413	1826	-	-	1586	1999	-	-	1760	2173	1933	2346	2106	2519	2279	2692	2452	2865	2625	3038	2798	3211	2971	3384
ø100	-	-	2106	2673	-	-	2334	2901	-	-	2561	3128	2789	3356	3017	3584	3245	3812	3473	4040	3701	4268	3929	4496	4157	4724

Stroke (mm)	110		120		130		140		150		160		170		180		190		200	
Bore size (mm)	No switch	Switch	No switch	Switch	No switch	Switch	No switch	Switch	No switch	Switch	No switch	Switch	No switch	Switch	No switch	Switch	No switch	Switch	No switch	Switch
ø20	370	445	395	470	420	495	445	520	470	545	495	570	520	595	545	620	570	645	595	670
ø25	482	573	514	605	546	637	581	669	610	701	642	733	674	765	706	797	738	829	770	861
ø32	682	796	725	839	768	882	811	925	854	968	896	1010	939	1053	982	1096	1025	1139	1068	1182
ø40	879	1022	932	1075	985	1128	1038	1181	1091	1234	1144	1287	1197	1340	1250	1393	1303	1446	1356	1499
ø50	1401	1595	1485	1679	1569	1763	1653	1847	1737	1931	1835	2029	1920	2114	2005	2199	2090	2284	2175	2369
ø63	1914	2193	2024	2303	2134	2413	2244	2523	2354	2633	2464	2743	2574	2853	2684	2963	2794	3073	2904	3183
ø80	3144	3557	3317	3730	3490	3903	3663	4076	3836	4249	4009	4422	4182	4595	4355	4768	4528	4941	4701	5112
ø100	4385	4952	4613	5180	4841	5408	5069	5636	5297	5864	5525	6092	5753	6320	5981	6548	6209	6776	6437	7004

Stroke (mm)	210		220		230		240		250		260		270		280		290		300	
Bore size (mm)	No switch	Switch	No switch	Switch	No switch	Switch	No switch	Switch	No switch	Switch	No switch	Switch	No switch	Switch	No switch	Switch	No switch	Switch	No switch	Switch
ø20	-	-	-	-	-	-	-	-	-	-	-	-	-	-	-	-	-	-	-	-
ø25	813	893	845	925	877	957	909	989	941	1021	973	1053	1005	1085	1037	1117	1069	1149	1101	1181
ø32	1111	1225	1154	1268	1197	1311	1240	1354	1283	1397	1326	1440	1369	1483	1412	1526	1455	1569	1498	1612
ø40	1409	1552	1462	1605	1515	1658	1568	1711	1621	1764	1674	1817	1727	1870	1780	1923	1833	1976	1886	2029
ø50	2260	2454	2345	2539	2430	2624	2515	2709	2600	2794	2685	2879	2770	2964	2855	3049	2940	3134	3025	3219
ø63	3013	3292	3123	3402	3233	3512	3343	3622	3453	3732	3563	3842	3673	3952	3783	4062	3893	4172	4003	4282
ø80	4873	5286	5046	5459	5219	5632	5392	5805	5565	5978	5738	6151	5911	6324	6084	6497	6257	6670	6430	6843
ø100	6666	7233	6894	7461	7122	7689	7350	7917	7578	8145	7806	8373	8034	8601	8262	8829	8490	9057	8718	9285

How to order mounting bracket

Bore size (mm) / Mounting bracket	ø20	ø25	ø32	ø40	ø50	ø63	ø80	ø100
Foot (LB)	SSD-LB-20	SSD-LB-25	SSD-LB-32	SSD-LB-40	SSD-LB-50	SSD-LB-63	SSD-LB-80	SSD-LB-100
Foot (LB2)	SSD-LB2-20	SSD-LB2-25	SSD-LB2-32	SSD-LB2-40	SSD-LB2-50	SSD-LB2-63	SSD-LB2-80	SSD-LB2-100
Flange (FA/FB)	SSD-FA-20	SSD-FA-25	SSD-FA-32	SSD-FA-40	SSD-FA-50	SSD-FA-63	SSD-FA-80	SSD-FA-100
Clevis bracket (CB)	SSD-CB-20	SSD-CB-25	SSD-CB-32	SSD-CB-40	SSD-CB-50	SSD-CB-63	SSD-CB-80	SSD-CB-100
Clevis bracket (CB2)	SSD-CB2-20	SSD-CB2-25	SSD-CB2-32	SSD-CB2-40	SSD-CB2-50	SSD-CB2-63	SSD-CB2-80	SSD-CB2-100

*1: The foot mounting bracket is provided as 2 pcs./set.

Internal structure and parts list

● SSD-KG5L-20/25 (double acting/high load/environment-resistant scraper/with switch)

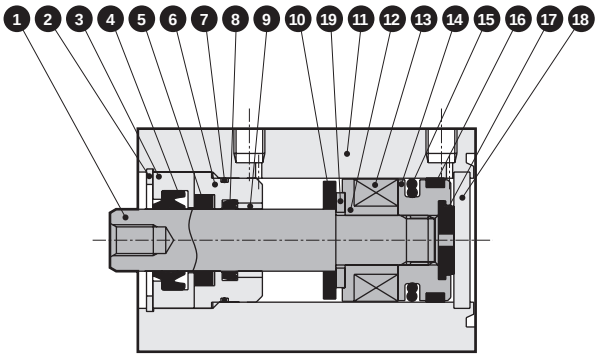

● SSD-KG5L-32 to 50 (double acting/high load/environment-resistant scraper/with switch)

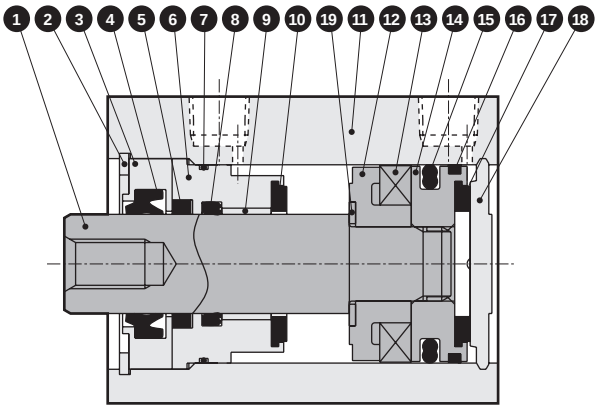

● SSD-KG5-20/25 (double acting/high load/environment-resistant scraper)

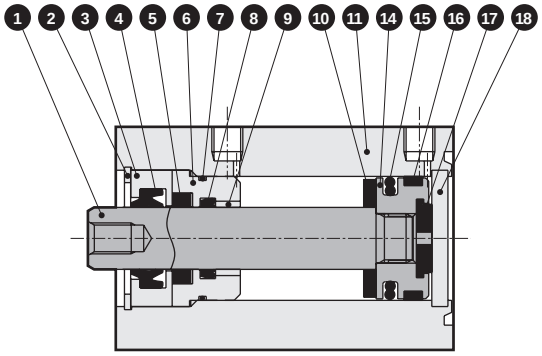

● SSD-KG5-32 to 50 (double acting/high load/environment-resistant scraper)

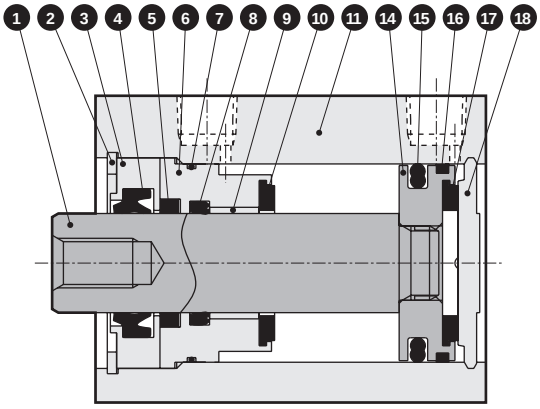

Main parts list

Part No.	Part name	Material	Remarks	Part No.	Part name	Material	Remarks
1	Piston rod	ø20/ø25: Stainless steel	Industrial chrome plating	11	Body	Aluminum alloy	Hard alumite
		ø32 to ø50: Steel		12	Spacer	Special resin	
2	C-snap ring	Steel	Zinc phosphate	13	Magnet	Plastic	
3	Rod metal 1	Special aluminum	Chromate	14	Piston	Aluminum alloy	Chromate
4	Scraper	Nitrile rubber		15	Piston packing	Nitrile rubber	
5	Lube keeping structure	Special rubber		16	Wear ring	Polyacetal resin	
6	Rod metal 2	Special aluminum	Alumite	17	Cushion rubber H	Urethane rubber	
7	Rod metal gasket	Nitrile rubber		18	Cover	ø20/ø25: Stainless steel	ø32 to ø50: Alumite
8	Rod packing	Nitrile rubber				ø32 to ø50: Aluminum alloy	
9	Bush	Dry bearing		19	Spacer washer	Stainless steel	
10	Cushion rubber R	Urethane rubber					

Consumable parts list

Part name / Bore size (mm)	Kit No.	Consumable parts No.
ø20	SSD-KG5-20K	4 5 7 8 10 15 16 17
ø25	SSD-KG5-25K	
ø32	SSD-KG5-32K	
ø40	SSD-KG5-40K	
ø50	SSD-KG5-50K	

Internal structure and parts list

● SSD-KG5L-63 to 100 (double acting/high load/environment-resistant scraper/with switch)

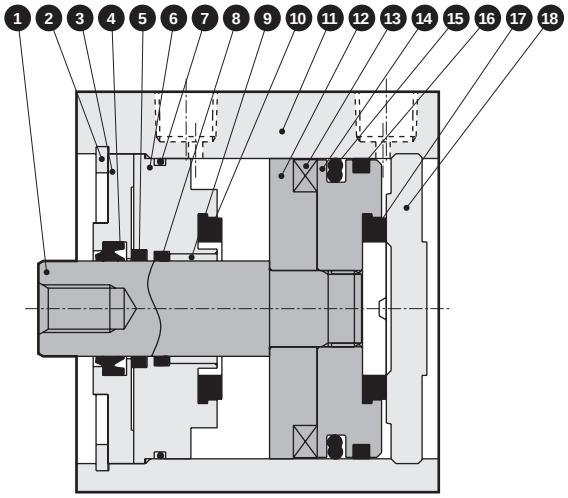

● SSD-KG5-63 to 100 (double acting/high load/environment-resistant scraper)

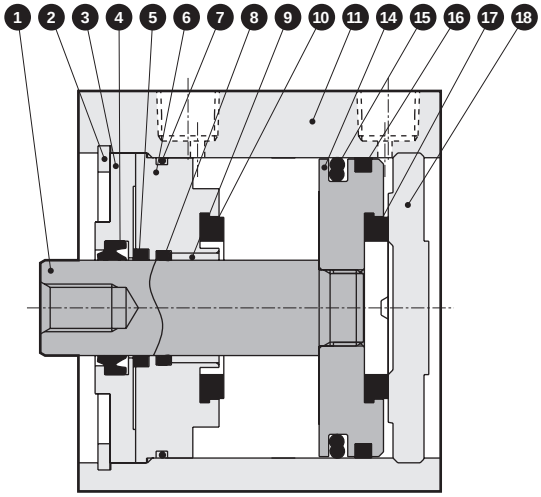

Main parts list

Part No.	Part name	Material	Remarks	Part No.	Part name	Material	Remarks
1	Piston rod	Steel	Industrial chrome plating	10	Cushion rubber R	Urethane rubber	
2	C-snap ring	Steel	Zinc phosphate	11	Body	Aluminum alloy	Hard alumite
3	Rod metal 1	Aluminum alloy	Chromate	12	Spacer	Aluminum alloy	Chromate
4	Scraper	Nitrile rubber		13	Magnet	Plastic	
5	Lube keeping structure	Special rubber		14	Piston	Aluminum alloy	Chromate
6	Rod metal 2	Aluminum alloy	Chromate	15	Piston packing	Nitrile rubber	
7	Rod metal gasket	Nitrile rubber		16	Wear ring	Polyacetal resin	
8	Rod packing	Nitrile rubber		17	Cushion rubber H	Urethane rubber	
9	Bush	Dry bearing		18	Cover	Aluminum alloy	Alumite

Consumable parts list

Part name / Bore size (mm)	Kit No.	Consumable parts No.
ø63	SSD-KG5-63K	4 5 7 8 10 15 16 17
ø80	SSD-KG5-80K	
ø100	SSD-KG5-100K	

dimensions

● SSD-KG5L-20, 25 (with switch)

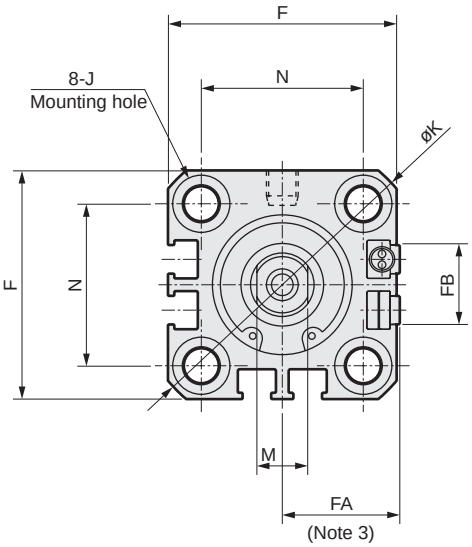

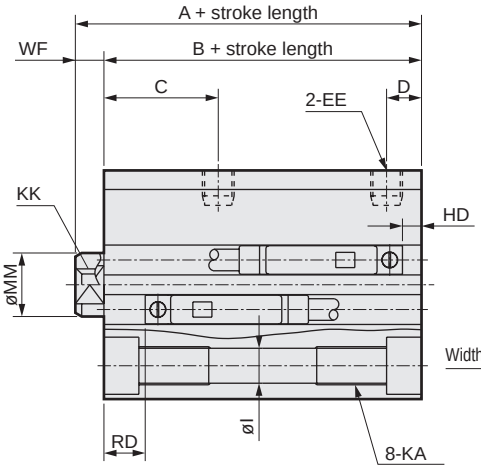

● Rod end male thread

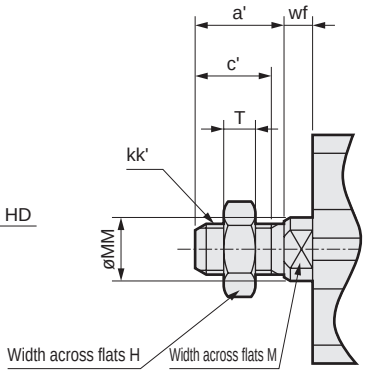

Code / Bore size	No switch		Common dimensions with switch							
	A*1	B*1	A*1	B*1	C	D	EE	F	FA*3	FB
ø20	39	34.5	49	44.5	18	5.5	M5	36	18.5(22)	12.5
ø25	42.5	37.5	52.5	47.5	21	6	M5	40	20.5(24)	13.5

Code / Bore size	Common dimensions with switch								
	I	J	K	KA	KK	M	MM	N	WF
ø20	5.5	9 spot face depth 5.5	47	M6 depth 11	M5 depth 7	8	10	25.5	4.5
ø25	5.5	9 spot face depth 5.5	51	M6 depth 11	M6 depth 11	10	12	28	5

Switch dimensions / Bore size	Reed/proximity 1-color		Proximity 2-color		T8H/V switch	
	HD*5	RD*5	HD*5	RD*5	HD*5	RD*5
ø20	6 (12.5)	18.5 (23.5)	4.5 (11)	18.5 (23.5)	0 (6.5)	12.5 (17.5)
ø25	5.5 (14)	22 (27)	4 (12.5)	22 (27)	0 (8)	16 (21)

*1 : To calculate A+ stroke or B+ stroke when using custom stroke, apply the next longer standard stroke (instead of the custom stroke) to the stroke value. (Example) If the custom stroke is 7 mm, apply the standard stroke of 10 mm.
*2 : HD and RD dimensions for 5 mm stroke differ from these dimensions according to the setting.
*3 : Dimensions in ( ) of FA are for the L-shaped lead wire.
*4 : Refer to pages 1320 to 1325 for dimensions including the accessories and pages 1108 to 1115 for dimensions of individual accessories.
*5 : When longer than 100 mm stroke for ø20 or longer than 150 mm stroke for ø25, A and B dimensions are indicated in Table 1 and there is no spot face J. HD, RD and D dimensions are indicated in ( ).

Table 1

Bore size	No switch		With switch	
	A*1	B*1	A*1	B*1
ø20	50.5	46	60.5	56
ø25	56	51	66	61

Rod end male thread

Code / Bore size	a'	c'	H	kk'	M	MM	T	wf
ø20	14	12	13	M8	8	10	5	4.5
ø25	17.5	15	17	M 10 x 1.25	10	12	6	5

dimensions

● SSD-KG5L-32 to 100 (with switch)

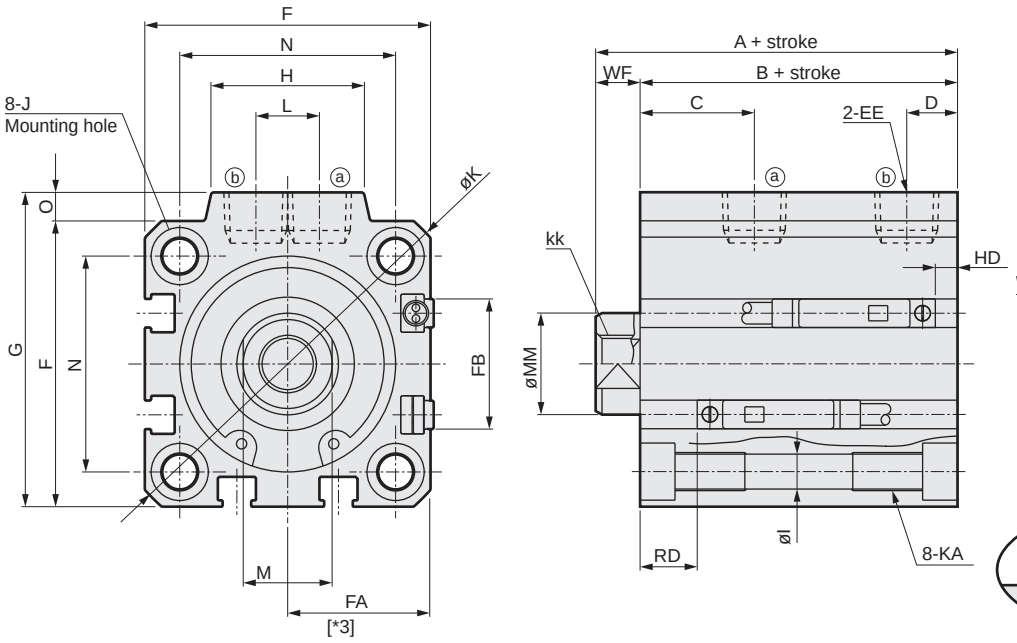

● Rod end male thread

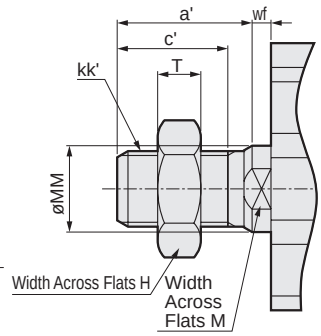

[Bore size ø100]

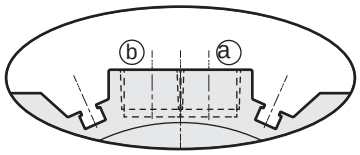

* Only for ø100, the port surface has switch grooves.

Code	No switch		Common dimensions with switch									
Bore size	A*1	B*1	A*1	B*1	C	D	EE	F	FA*3	FB	G	H
ø32	50	43	60	53	18	8	Rc1/8	45	23 (26.5)	20.5	49.5	24
ø40	56.5	49.5	66.5	59.5	22	8.5	Rc1/8	52	26.5(30)	27.5	57	24
ø50	58.5	50.5	68.5	60.5	20.5	10.5	Rc1/4	64	32.5(36)	28.5	71	33
ø63	64	56	74	66	23	11	Rc1/4	77	39 (42.5)	28.5	84	33
ø80	73.5	63.5	83.5	73.5	26	13	Rc3/8	98	49.5(53)	28.5	104	38
ø100	85	73	95	83	33	15	Rc3/8	117	59 (62.5)	28.5	123.5	38

Code	Common dimensions with switch										
Bore size	I	J	K	KA	KK	L	M	MM	N	O	WF
ø32	5.5	9 spot face depth 5.5	60	M6 depth 11	M8 depth 13	10	14	16	34	4.5	7
ø40	5.5	9 spot face depth 5.5	69	M6 depth 11	M8 depth 13	10	14	16	40	5	7
ø50	6.9	11 spot face depth 6.5	86	M8 depth 13	M10 depth 15	15	17	20	50	7	8
ø63	8.7	14 spot face depth 9	103	M10 depth 25	M10 depth 15	15	17	20	60	7	8
ø80	10.5	17.5 spot face depth 11	132	M12 depth 28	M16 depth 21	15	22	25	77	6	10
ø100	10.5	17.5 spot face depth 11	156	M12 depth 29	M20 depth 27	15	27	30	94	6.5	12

Switch dimensions	Reed/proximity 1-color		Proximity 2-color		T8H/V switch	
Bore size	HD*4	RD*4	HD*4	RD*4	HD*4	RD*4
ø32	8.5 (16)	24 (24)	7 (14.5)	22.5 (22.5)	2.5 (10)	18 (18)
ø40	9.5 (19)	29.5 (29.5)	8 (17.5)	28 (28)	3.5 (13)	23.5 (23.5)
ø50	10 (19)	30 (35)	8.5 (17.5)	28.5 (33.5)	4 (13)	24 (29)
ø63	17.5 (23)	28 (33)	16 (21.5)	26.5 (31.5)	11.5 (17)	22 (27)
ø80	22 (28)	30.5 (35.5)	20.5 (26.5)	29 (34)	16 (22)	24.5 (29.5)
ø100	28 (33.5)	34.5 (39.5)	26.5 (32)	33 (38)	22 (27.5)	28.5 (33.5)

*1 : To calculate A+ stroke or B+ stroke when using custom stroke, apply the next longer standard stroke (instead of the custom stroke) to the stroke value.
(Example) If the custom stroke is 7 mm, apply the standard stroke of 10 mm.
*2 : HD and RD dimensions for 5 mm stroke differ from these dimensions according to the setting.
*3 : Dimensions in ( ) of FA are for the L-shaped lead wire.
*4 : When longer than 150 mm stroke for ø32 to ø50 or longer than 200 mm stroke for ø63 to ø100, A and B dimensions are indicated in Table 1 and there is no spot face J. HD, RD and D dimensions are indicated in ( ).

Rod end male thread

Code	a'	c'	H	kk'	M	MM	T	wf
Bore size								
ø32	23.5	20.5	22	M14x1.5	14	16	8	5
ø40	23.5	20.5	22	M14x1.5	14	16	8	5
ø50	28.5	26	27	M18x1.5	17	20	11	5
ø63	28.5	26	27	M18x1.5	17	20	11	5
ø80	35.5	32.5	32	M22x1.5	22	25	13	8
ø100	35.5	32.5	41	M26x1.5	27	30	16	8

Table 1

Bore size	No switch		With switch	
	A*1	B*1	A*1	B*1
ø32	57.5	50.5	67.5	60.5
ø40	66	59	76	69
ø50	72	64	82	74
ø63	74	66	84	76
ø80	83.5	73.5	93.5	83.5
ø100	95	83	105	93

* Refer to pages 1320 to 1325 for dimensions including the accessories and pages 1108 to 1115 for dimensions of individual accessories.

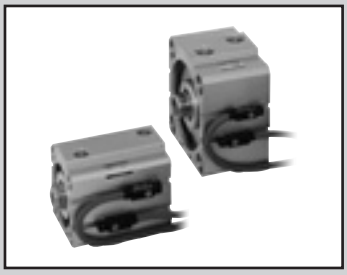

Compact cylinder double acting/single rod/with strong magnetic field proof switch

SSD-L4 Series

● Bore size: ø40/ø50/ø63/ø80/ø100

JIS symbol

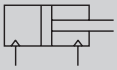

RoHS

Specifications

Item	SSD-L4				
Bore size mm	ø40	ø50	ø63	ø80	ø100
Actuation	Double acting				
Working fluid	Compressed air				
Max. working pressure MPa	1.0 (≈150 psi, 10 bar)				
Min. working pressure MPa	0.1 (≈15 psi, 1 bar)		0.05 (≈7.3 psi, 0.5 bar)		
Proof pressure MPa	1.6 (≈230 psi, 16 bar)				
Ambient temperature °C	-10 (14°F) to 60 (140°F) (no freezing)				
Port size	Rc1/8	Rc1/4		Rc3/8	
Stroke tolerance mm	$^{+1.0}_{0}$				
Working piston speed mm/s	50 to 500		50 to 300		
Cushion	None				
Lubrication	Not required (use turbine oil class 1 ISO VG32 if necessary for lubrication)				
Allowable absorbed energy J	0.092	0.1	0.12	0.27	0.56

Stroke

Bore size (mm)	Standard stroke (mm)	Max. stroke (mm)	Min. stroke (mm)
ø40	20, 30, 40, 50	50	20
ø50			
ø63			
ø80			
ø100			

*1: The custom stroke is available in 1mm increments. However, the total length is the same as that of the next longer standard stroke.

Number of installed switches and min. stroke (mm)

Switch quantity	1	2	3
Switch model No. / Bore size (mm)	V0		
ø40	20	20	35
ø50	20	20	35
ø63	20	20	35
ø80	20	20	35
ø100	20	20	35

Switch specifications

Item	2-wire reed V0	
Applications	For relay, programmable controller	
Load voltage	12/24 VDC	110 VAC
Load current	5 to 50 mA	7 to 20 mA
Internal voltage drop	3.0 V or less (with 40 mA load current)	
Indicator	LED (Lit when ON)	
Leakage current	0 mA	
Weight g	1 m:63 3 m:170 5 m:277	

Cylinder weight table (the weight of the switches is when there are 2 cylinder switches.)

(Unit: g)

Stroke (mm) / Bore size (mm)	20	30	40	50
ø40	493	546	599	652
ø50	757	841	925	1009
ø63	1089	1200	1311	1422
ø80	1822	1996	2170	2344
ø100	2665	2892	3119	3346

Theoretical thrust table

(Unit: N)

Bore size (mm)	Operating direction	Working pressure MPa											
		0.05	0.1	0.15	0.2	0.3	0.4	0.5	0.6	0.7	0.8	0.9	1.0
ø40	Push	-	$1.26x10^2$	$1.88x10^2$	$2.51x10^2$	$3.77x10^2$	$5.03x10^2$	$6.28x10^2$	$7.54x10^2$	$8.80x10^2$	$1.01x10^3$	$1.13x10^3$	$1.26x10^3$
	Pull	-	$1.06x10^2$	$1.58x10^2$	$2.11x10^2$	$3.17x10^2$	$4.22x10^2$	$5.28x10^2$	$6.33x10^2$	$7.39x10^2$	$8.44x10^2$	$9.50x10^2$	$1.06x10^3$
ø50	Push	-	$1.96x10^2$	$2.95x10^2$	$3.93x10^2$	$5.89x10^2$	$7.85x10^2$	$9.82x10^2$	$1.18x10^3$	$1.37x10^3$	$1.57x10^3$	$1.77x10^3$	$1.96x10^3$
	Pull	-	$1.65x10^2$	$2.47x10^2$	$3.30x10^2$	$4.95x10^2$	$6.60x10^2$	$8.25x10^2$	$9.90x10^2$	$1.15x10^3$	$1.32x10^3$	$1.48x10^3$	$1.65x10^3$
ø63	Push	$1.56x10^2$	$3.12x10^2$	$4.68x10^2$	$6.23x10^2$	$9.35x10^2$	$1.25x10^3$	$1.56x10^3$	$1.87x10^3$	$2.18x10^3$	$2.49x10^3$	$2.81x10^3$	$3.12x10^3$
	Pull	$1.40x10^2$	$2.80x10^2$	$4.20x10^2$	$5.61x10^2$	$8.41x10^2$	$1.12x10^3$	$1.40x10^3$	$1.68x10^3$	$1.96x10^3$	$2.24x10^3$	$2.52x10^3$	$2.80x10^3$
ø80	Push	$2.51x10^2$	$5.03x10^2$	$7.54x10^2$	$1.01x10^3$	$1.51x10^3$	$2.01x10^3$	$2.51x10^3$	$3.02x10^3$	$3.52x10^3$	$4.02x10^3$	$4.52x10^3$	$5.03x10^3$
	Pull	$2.27x10^2$	$4.54x10^2$	$6.80x10^2$	$9.07x10^2$	$1.36x10^3$	$1.81x10^3$	$2.27x10^3$	$2.72x10^3$	$3.17x10^3$	$3.63x10^3$	$4.08x10^3$	$4.54x10^3$
ø100	Push	$3.93x10^2$	$7.85x10^2$	$1.18x10^3$	$1.57x10^3$	$2.36x10^3$	$3.14x10^3$	$3.93x10^3$	$4.71x10^3$	$5.50x10^3$	$6.28x10^3$	$7.07x10^3$	$7.85x10^3$
	Pull	$3.57x10^2$	$7.15x10^2$	$1.07x10^3$	$1.43x10^3$	$2.14x10^3$	$2.86x10^3$	$3.57x10^3$	$4.29x10^3$	$5.00x10^3$	$5.72x10^3$	$6.43x10^3$	$7.15x10^3$

How to order

SSD-L4 - 50 - 40 - V0 - D - N - LB - I

- SSD-L4: Model No.
- 50: Ⓐ Bore size
- 40: Ⓑ Stroke
- V0: Ⓒ Switch model No. *4
- D: Ⓓ Switch quantity
- N: Ⓔ Option
- LB: Ⓕ Mounting bracket *1 *2
- I: Ⓖ Accessory *3

Code	Description
Ⓐ Bore size (mm)	
40	ø40
50	ø50
63	ø63
80	ø80
100	ø100

Ⓑ Stroke (mm)

Bore size	Stroke *1	Custom stroke *2
ø40 to ø100	**20 to 50**	**In 1 mm increments**

*1: Refer to page 1288 for the number of installed switches and the min. stroke.
*2: The total length is the same as that of the next longer standard stroke.

Ⓒ Switch model No.

Axial lead wire	Contact	Voltage		Indicator	Lead wire
		AC	DC		
V0*	Reed	●	●	1-color LED	2-wire

* Lead wire length	
Blank	1 m (standard)
3	3 m (option)
5	5 m (option)

Ⓓ Switch quantity

R	1 on rod side
H	1 on head side
D	2
T	3

Ⓔ Option

Blank	Rod end female thread
N	Rod end male thread

Ⓕ Mounting bracket

LB	Axial foot
LB2	Axial foot (compact)
CB	Clevis bracket (pin and snap ring included)
CB2	Clevis bracket (compact) (pin and snap ring included)
FA	Rod side flange
FB	Head side flange

Ⓖ Accessory (available when rod end male thread "N" is selected)

I	Rod eye
I2	Rod eye (compact)
Y	Rod clevis (pin and snap ring included)
Y2	Rod clevis (compact) (pin and snap ring included)

⚠ Precautions for model No. selection

*1 : The mounting bracket is included at shipment.
*2 : The projection dimension of piston rod WF when LB2 or FA is selected is different from that of the standard. Refer to the dimensions on pages 1109 and 1110. The number of the specified protruding dimension will be added at the end of the model No. printed on the metal plate on the body.
*3 : "I" and "Y" cannot be selected together.
*4 : Switches are shipped with the product. Contact CKD if assembling before shipment is necessary.

[Example of model No.]

SSD-L4-50-40-V0-D-N-LB-I

Model: Compact cylinder double acting/single rod/ with strong magnetic field proof switch

Ⓐ Bore size : ø50 mm
Ⓑ Stroke : 40 mm
Ⓒ Switch model No. : Reed switch V0, lead wire length 1 m
Ⓓ Switch quantity : 2
Ⓔ Option : Rod end male thread
Ⓕ Mounting bracket : Axial foot
Ⓖ Accessory : Rod eye

How to order switch

SW - V0

Switch model No.
(Item Ⓒ on page 1290)

How to order mounting bracket

Bore size (mm) / Mounting bracket	ø40	ø50	ø63	ø80	ø100
Foot (LB)	SSD-LB-40	SSD-LB-50	SSD-LB-63	SSD-LB-80	SSD-LB-100
Foot (LB2)	SSD-LB2-40	SSD-LB2-50	SSD-LB2-63	SSD-LB2-80	SSD-LB2-100
Flange (FA/FB)	SSD-FA-40	SSD-FA-50	SSD-FA-63	SSD-FA-80	SSD-FA-100
Clevis bracket (CB)	SSD-CB-40	SSD-CB-50	SSD-CB-63	SSD-CB-80	SSD-CB-100
Clevis bracket (CB2)	SSD-CB2-40	SSD-CB2-50	SSD-CB2-63	SSD-CB2-80	SSD-CB2-100

*1: The foot mounting bracket is provided as 2 pcs./set.

SCP*3
CMK2
CMA2
SCM
SCG
SCA2
SCS2
CKV2
CAV2/COVP/N2
SSD2
SSG
SSD
CAT
MDC2
MVC
SMG
MSD/MSDG
FC*
STK
SRL3
SRG3
SRM3
SRT3
MRL2
MRG2
SM-25
ShkAbs
FJ
FK
Spd Contr
Ending

Internal structure and parts list

● SSD-L4-40

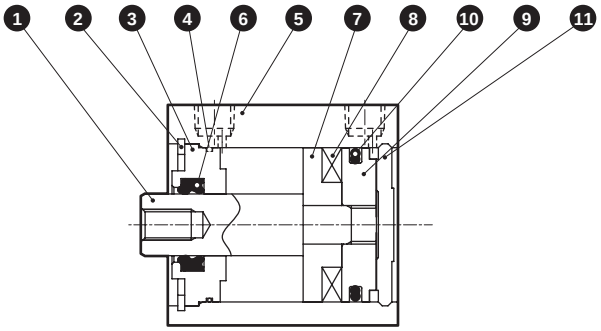

● SSD-L4-50

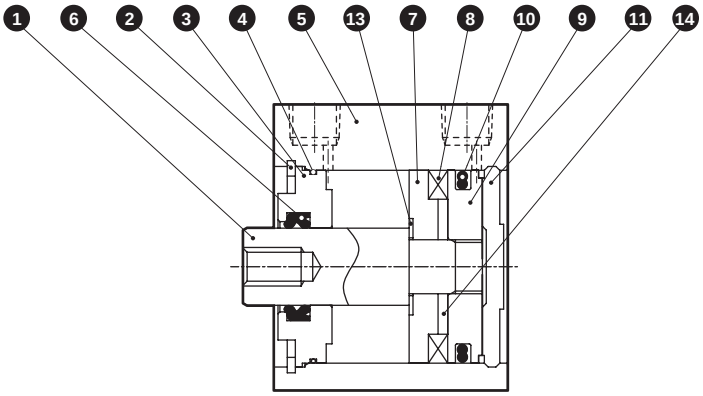

● SSD-L4-63 to 100

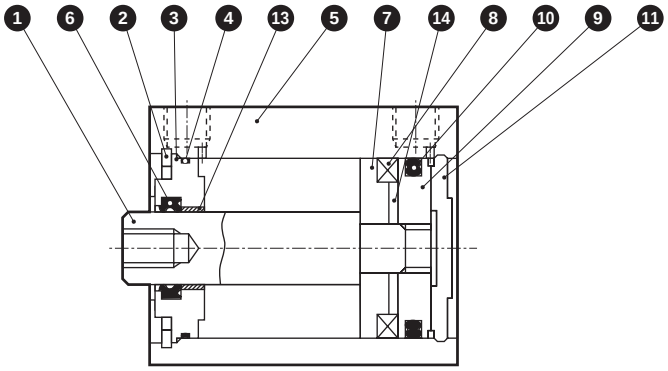

No.	Part name	Material	Remarks
1	Piston rod	Steel	Industrial chrome plating
2	C-snap ring	Steel	Zinc phosphate
3	Rod metal	ø40, ø50: Special aluminum ø63 to ø100: Aluminum alloy	Alumite
4	Rod metal gasket	Nitrile rubber	
5	Body	Aluminum alloy	Hard alumite
6	Rod packing	Nitrile rubber	
7	Spacer	Aluminum alloy (resin for ø50 only)	Chromate

No.	Part name	Material	Remarks
8	Magnet	Plastic	
9	Piston	Aluminum alloy	Chromate
10	Piston packing	Nitrile rubber	
11	Cover	Aluminum alloy	Alumite
12	Bush	Oiles drymet	
13	Spacer washer	Stainless steel	ø50
14	Collar	Aluminum alloy	ø50 to ø100

Repair parts list

Bore size (mm)	Kit No.	Repair parts No.
ø40	SSD-40K	❹ ❻ ❿
ø50	SSD-50K	
ø63	SSD-63K	
ø80	SSD-80K	
ø100	SSD-100K	

dimensions

● SSD-L4-40 to 100

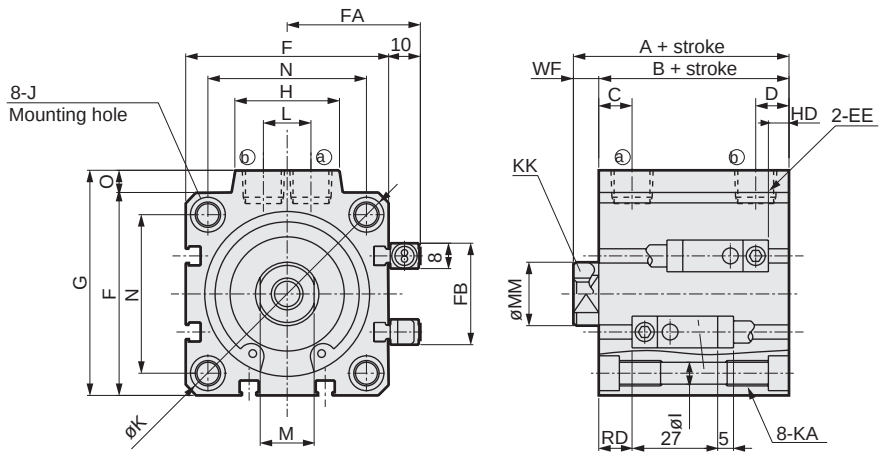

● Rod end male thread

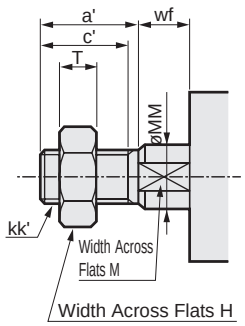

[Bore size ø100]

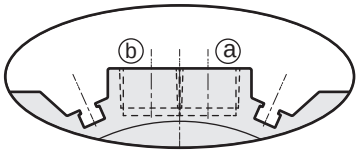

* Only for ø100, the port surface has switch grooves.

Code / Bore size	A	B	C	D	EE	F	FA	FB	G	H	I	J
ø40	56.5	49.5	12	8.5	Rc1/8	52	36	31	57	24	5.5	Spot face ø9, depth 5.5, ø5.5 through hole
ø50	58.5	50.5	10.5	10.5	Rc1/4	64	42	32	71	33	6.9	Spot face ø11, depth 6.5, ø6.9 through hole
ø63	64	56	13	11	Rc1/4	77	48.5	32	84	33	8.7	Spot face ø14, depth 9, ø8.7 through hole
ø80	73.5	63.5	16	13	Rc3/8	98	59	32	104	38	10.5	Spot face ø17.5, depth 11, ø10.5 through hole
ø100	85	73	23	15	Rc3/8	117	68.5	32	123.5	38	10.5	Spot face ø17.5, depth 11, ø10.5 through hole

Code / Bore size	K	KA	KK	M	MM	N	O	WF	HD	RD
ø40	69	M6 depth 11	M8 depth 13	14	16	40	5	7	7.5	13
ø50	86	M8 depth 13	M10 depth 15	17	20	50	7	8	8.5	13
ø63	103	M10 depth 25	M10 depth 15	17	20	60	7	8	13.5	13.5
ø80	132	M12 depth 28	M16 depth 21	22	25	77	6	10	18.5	16
ø100	156	M12 depth 28	M20 depth 27	27	30	94	6.5	12	24	20

*1: The A, B dimensions when using a custom stroke are the same as those of when using the next longer standard stroke.

● Dimensions of rod end male thread part

Code / Bore size (mm)	a'	C'	H	kk'	M	MM	T	wf'
ø40	23.5	20.5	22	M 14 x 1.5	14	16	8	5
ø50	28.5	26	27	M 18 x 1.5	17	20	11	5
ø63	28.5	26	27	M 18 x 1.5	17	20	11	5
ø80	35.5	32.5	32	M 22 x 1.5	22	25	13	8
ø100	35.5	32.5	41	M 26 x 1.5	27	30	16	8

* For dimensions of individual accessories, refer to pages 1108 to 1115.

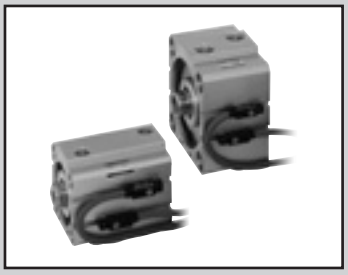

Compact cylinder double acting/single rod
with strong magnetic field proof switch/with coil scraper

SSD-G1L4 Series

● Bore size: ø40/ø50/ø63/ø80/ø100

JIS symbol

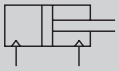

RoHS

Specifications

Item	SSD-G1L4				
Bore size mm	ø40	ø50	ø63	ø80	ø100
Actuation	Double acting				
Working fluid	Compressed air				
Max. working pressure MPa	1.0 (≈150 psi, 10 bar)				
Min. working pressure MPa	0.15 (≈22 psi, 1.5 bar)		0.1 (≈15 psi, 1 bar)		
Proof pressure MPa	1.6 (≈230 psi, 16 bar)				
Ambient temperature °C	-10 (14°F) to 60 (140°F) (no freezing)				
Port size	Rc1/8	Rc1/4		Rc3/8	
Stroke tolerance mm	$^{+1.0}_{0}$				
Working piston speed mm/s	50 to 500		50 to 300		
Cushion	None				
Lubrication	Not required (use turbine oil class 1 ISO VG32 if necessary for lubrication)				
Allowable absorbed energy J	0.092	0.1	0.12	0.27	0.56

Stroke

Bore size (mm)	Standard stroke (mm)	Max. stroke (mm)	Min. stroke (mm)
ø40	20, 30, 40, 50	50	20
ø50			
ø63			
ø80			
ø100			

*1: The custom stroke is available in 1mm increments. However, the total length is the same as that of the next longer standard stroke.

Number of installed switches and min. stroke (mm)

Switch quantity	1	2	3
Switch model No. / Bore size (mm)	V0		
ø40	20	20	35
ø50	20	20	35
ø63	20	20	35
ø80	20	20	35
ø100	20	20	35

Switch specifications

Item	2-wire reed	
	VO	
Applications	For relay, programmable controller	
Load voltage	12/24 VDC	110 VAC
Load current	5 to 50 mA	7 to 20 mA
Internal voltage drop	3.0 V or less (with 40 mA load current)	
Indicator	LED (Lit when ON)	
Leakage current	O mA	
Weight g	1 m:63 3 m:170 5 m:277	

Cylinder weight table (the weight of the switches is when there are 2 cylinder switches.)

(Unit: g)

Stroke (mm) / Bore size (mm)	20	30	40	50
ø40	575	628	681	734
ø50	876	960	1044	1128
ø63	1240	1351	1462	1573
ø80	2074	2248	2422	2596
ø100	3000	3227	3454	3681

Theoretical thrust table

(Unit: N)

Bore size (mm)	Operating direction	Working pressure MPa										
		0.1	0.15	0.2	0.3	0.4	0.5	0.6	0.7	0.8	0.9	1.0
ø40	Push	-	$1.88x10^2$	$2.51x10^2$	$3.77x10^2$	$5.03x10^2$	$6.28x10^2$	$7.54x10^2$	$8.80x10^2$	$1.01x10^3$	$1.13x10^3$	$1.26x10^3$
	Pull	-	$1.58x10^2$	$2.11x10^2$	$3.17x10^2$	$4.22x10^2$	$5.28x10^2$	$6.33x10^2$	$7.39x10^2$	$8.44x10^2$	$9.50x10^2$	$1.06x10^3$
ø50	Push	-	$2.95x10^2$	$3.93x10^2$	$5.89x10^2$	$7.85x10^2$	$9.82x10^2$	$1.18x10^3$	$1.37x10^3$	$1.57x10^3$	$1.77x10^3$	$1.96x10^3$
	Pull	-	$2.47x10^2$	$3.30x10^2$	$4.95x10^2$	$6.60x10^2$	$8.25x10^2$	$9.90x10^2$	$1.15x10^3$	$1.32x10^3$	$1.48x10^3$	$1.65x10^3$
ø63	Push	$3.12x10^2$	$4.68x10^2$	$6.23x10^2$	$9.35x10^2$	$1.25x10^3$	$1.56x10^3$	$1.87x10^3$	$2.18x10^3$	$2.49x10^3$	$2.81x10^3$	$3.12x10^3$
	Pull	$2.80x10^2$	$4.20x10^2$	$5.61x10^2$	$8.41x10^2$	$1.12x10^3$	$1.40x10^3$	$1.68x10^3$	$1.96x10^3$	$2.24x10^3$	$2.52x10^3$	$2.80x10^3$
ø80	Push	$5.03x10^2$	$7.54x10^2$	$1.01x10^3$	$1.51x10^3$	$2.01x10^3$	$2.51x10^3$	$3.02x10^3$	$3.52x10^3$	$4.02x10^3$	$4.52x10^3$	$5.03x10^3$
	Pull	$4.54x10^2$	$6.80x10^2$	$9.07x10^2$	$1.36x10^3$	$1.81x10^3$	$2.27x10^3$	$2.72x10^3$	$3.17x10^3$	$3.63x10^3$	$4.08x10^3$	$4.54x10^3$
ø100	Push	$7.85x10^2$	$1.18x10^3$	$1.57x10^3$	$2.36x10^3$	$3.14x10^3$	$3.93x10^3$	$4.71x10^3$	$5.50x10^3$	$6.28x10^3$	$7.07x10^3$	$7.85x10^3$
	Pull	$7.15x10^2$	$1.07x10^3$	$1.43x10^3$	$2.14x10^3$	$2.86x10^3$	$3.57x10^3$	$4.29x10^3$	$5.00x10^3$	$5.72x10^3$	$6.43x10^3$	$7.15x10^3$

How to order

SSD-G1L4 - 50 - 40 - V0 - D - N - LB - I

- SSD-G1L4: Model No.
- 50: Ⓐ Bore size
- 40: Ⓑ Stroke
- V0: Ⓒ Switch model No. *4
- D: Ⓓ Switch quantity
- N: Ⓔ Option
- LB: Ⓕ Mounting bracket *1 *2
- I: Ⓖ Accessory *3

Code	Description
Ⓐ Bore size (mm)	
40	ø40
50	ø50
63	ø63
80	ø80
100	ø100

Ⓑ Stroke (mm)

Bore size	Stroke *1	Custom stroke *2
ø40 to ø100	**20 to 50**	**In 1 mm increments**

*1: Refer to page 1294 for the number of installed switches and the min. stroke.
*2: The total length is the same as that of the next longer standard stroke.

Ⓒ Switch model No.

Axial lead wire	Contact	Voltage		Indicator	Lead wire
		AC	DC		
V0*	Reed	●	●	1-color LED	2-wire

* Lead wire length	
Blank	1 m (standard)
3	3 m (option)
5	5 m (option)

Ⓓ Switch quantity	
R	1 on rod side
H	1 on head side
D	2
T	3

Ⓔ Option	
Blank	Rod end female thread
N	Rod end male thread

Ⓕ Mounting bracket	
LB	Axial foot
LB2	Axial foot (compact)
CB	Clevis bracket (pin and snap ring included)
CB2	Clevis bracket (compact) (pin and snap ring included)
FA	Rod side flange
FB	Head side flange

Ⓖ Accessory (available when rod end male thread "N" is selected)	
I	Rod eye
I2	Rod eye (compact)
Y	Rod clevis (pin and snap ring included)
Y2	Rod clevis (compact) (pin and snap ring included)

⚠ Precautions for model No. selection

*1 : The mounting bracket is included at shipment.
*2 : The projection dimension of piston rod WF when LB2 or FA is selected is different from that of the standard. Refer to the dimensions on pages 1109 and 1110. The number of the specified protruding dimension will be added at the end of the model No. printed on the metal plate on the body.
*3 : "I" and "Y" cannot be selected together.
*4 : Switches are shipped with the product. Contact CKD if assembling before shipment is necessary.

[Example of model No.]

SSD-G1L4-50-40-V0-D-N-LB-I

Model: Compact cylinder double acting/with coil scraper/ with strong magnetic field proof switch

Ⓐ Bore size : ø50 mm
Ⓑ Stroke : 40 mm
Ⓒ Switch model No. : Reed switch V0, lead wire length 1 m
Ⓓ Switch quantity : 2
Ⓔ Option : Rod end male thread
Ⓕ Mounting bracket : Axial foot
Ⓖ Accessory : Rod eye

How to order switch

SW - V0

Switch model No.
(Item Ⓒ on page 1296)

How to order mounting bracket

Bore size (mm) / Mounting bracket	ø40	ø50	ø63	ø80	ø100
Foot (LB)	SSD-LB-40	SSD-LB-50	SSD-LB-63	SSD-LB-80	SSD-LB-100
Foot (LB2)	SSD-LB2-40	SSD-LB2-50	SSD-LB2-63	SSD-LB2-80	SSD-LB2-100
Flange (FA/FB)	SSD-FA-40	SSD-FA-50	SSD-FA-63	SSD-FA-80	SSD-FA-100
Clevis bracket (CB)	SSD-CB-40	SSD-CB-50	SSD-CB-63	SSD-CB-80	SSD-CB-100
Clevis bracket (CB2)	SSD-CB2-40	SSD-CB2-50	SSD-CB2-63	SSD-CB2-80	SSD-CB2-100

*1: The foot mounting bracket is provided as 2 pcs./set.

Internal structure and parts list

● SSD-G1L4-40

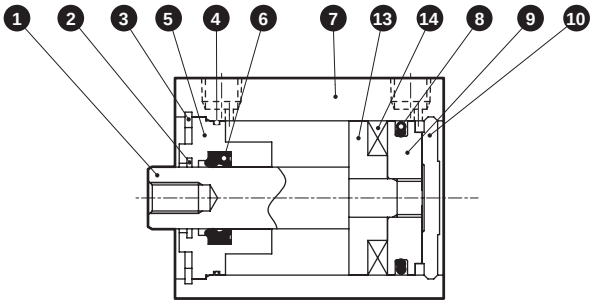

● SSD-G1L4-50

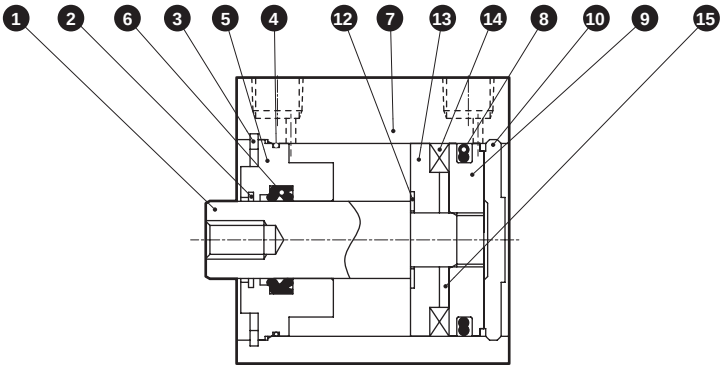

● SSD-G1L4-63 to 100

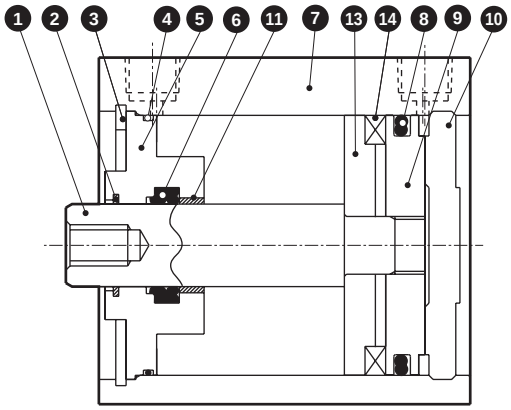

No.	Part name	Material	Remarks	No.	Part name	Material	Remarks
1	Piston rod	Steel	Industrial chrome plating	9	Piston	Aluminum alloy	Chromate
2	Coil scraper	Phosphor bronze		10	Cover	Aluminum alloy	Chromate
3	C-snap ring for hole	Steel	Zinc phosphate	11	Bush	Oiles drymet	ø63 to ø100
4	Rod metal gasket	Nitrile rubber		12	Spacer washer	Stainless steel	ø50
5	Rod metal	ø40, ø50: Special aluminum ø63 to ø100: Aluminum alloy		13	Spacer	Aluminum alloy (resin for ø50 only)	Chromate
6	Rod packing	Nitrile rubber	Chromate	14	Magnet	Plastic	
7	Tube body	Aluminum alloy	Hard alumite	15	Collar	Aluminum alloy	ø50 to ø100
8	Piston packing	Nitrile rubber					

Repair parts list

Part name / Bore size (mm)	Kit No.	Repair parts No.
ø40	SSD-G1-40K	❷ ❹ ❻ ❽
ø50	SSD-G1-50K	
ø63	SSD-G1-63K	
ø80	SSD-G1-80K	
ø100	SSD-G1-100K	

dimensions

● SSD-G1L4-40 to 100

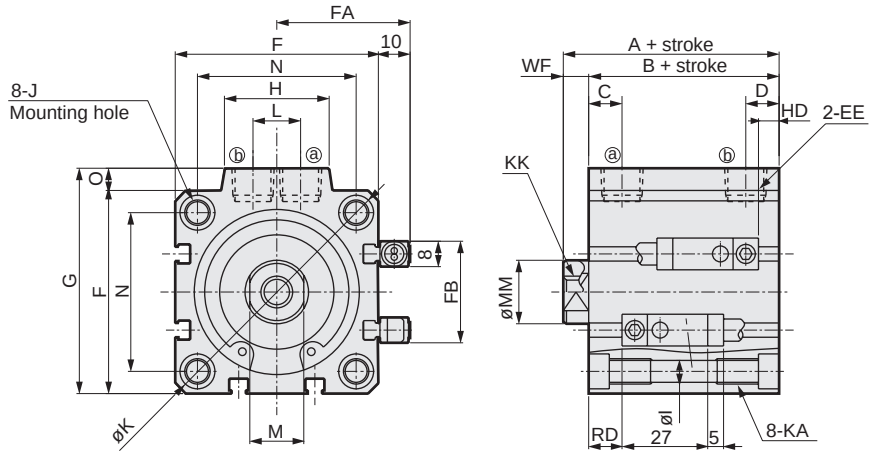

● Rod end male thread

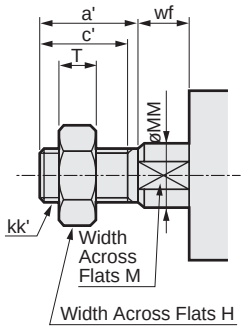

[Bore size ø100]

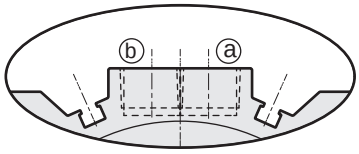

* Only for ø100, the port surface has switch grooves.

Code / Bore size	A	B	C	D	EE	F	FA	FB	G	H	I	J
ø40	66.5	59.5	12	8.5	Rc1/8	52	36	31	57	24	5.5	Spot face ø9, depth 5.5, ø5.5 through hole
ø50	68.5	60.5	10.5	10.5	Rc1/4	64	42	32	71	33	6.9	Spot face ø11, depth 6.5, ø6.9 through hole
ø63	74	66	13	11	Rc1/4	77	48.5	32	84	33	8.7	Spot face ø14, depth 9, ø8.7 through hole
ø80	83.5	73.5	16	13	Rc3/8	98	59	32	104	38	10.5	Spot face ø17.5, depth 11, ø10.5 through hole
ø100	95	83	23	15	Rc3/8	117	68.5	32	123.5	38	10.5	Spot face ø17.5, depth 11, ø10.5 through hole

Code / Bore size	K	KA	KK	L	M	MM	N	O	WF	HD	RD
ø40	69	M6 depth 11	M8 depth 13	10	14	16	40	5	7	7.5	23
ø50	86	M8 depth 13	M10 depth 15	15	17	20	50	7	8	8.5	23
ø63	103	M10 depth 25	M10 depth 15	15	17	20	60	7	8	13.5	23.5
ø80	132	M12 depth 28	M16 depth 21	15	22	25	77	6	10	18.5	26
ø100	156	M12 depth 28	M20 depth 27	15	27	30	94	6.5	12	24	30

*1: The A, B dimensions when using a custom stroke are the same as those of when using the next longer standard stroke.

● Dimensions of rod end male thread

Code / Bore size (mm)	a'	C'	H	kk'	M	MM	T	wf'
ø40	23.5	20.5	22	M 14 x 1.5	14	16	8	5
ø50	28.5	26	27	M 18 x 1.5	17	20	11	5
ø63	28.5	26	27	M 18 x 1.5	17	20	11	5
ø80	35.5	32.5	32	M 22 x 1.5	22	25	13	8
ø100	35.5	32.5	41	M 26 x 1.5	27	30	16	8

* For dimensions of individual accessories, refer to pages 1108 to 1115.

Compact cylinder double acting/high load/
with strong magnetic field proof switch

SSD-KL4 Series

● Bore size: ø40/ø50/ø63/ø80/ø100

JIS symbol

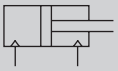

RoHS

Specifications

Item	SSD-KL4				
Bore size mm	ø40	ø50	ø63	ø80	ø100
Actuation	Double acting				
Working fluid	Compressed air				
Max. working pressure MPa	1.0 (≈150 psi, 10 bar)				
Min. working pressure MPa	0.1 (≈15 psi, 1 bar)		0.05 (≈7.3 psi, 0.5 bar)		
Proof pressure MPa	1.6 (≈230 psi, 16 bar)				
Ambient temperature °C	-10 (14°F) to 60 (140°F) (no freezing)				
Port size	Rc1/8	Rc1/4		Rc3/8	
Stroke tolerance mm	$^{+2.0}_{0}$				
Working piston speed mm/s	50 to 500		50 to 300		
Cushion	Rubber cushion				
Lubrication	Not required (use turbine oil class 1 ISO VG32 if necessary for lubrication)				
Allowable absorbed energy J	0.63	0.98	1.56	2.51	3.92

Stroke

Bore size (mm)	Standard stroke (mm)	Max. stroke (mm)	Min. stroke (mm)
ø40	20, 30, 40, 50, 60 70, 80, 90, 100	*2) 150	20
ø50			
ø63		*2) 200	
ø80			
ø100			

*1: The custom stroke is available in 1mm increments. However, the total length is the same as that of the next longer standard stroke.
*2: Stroke over standard to maximum is available in increments of 10.
(Example) ø40: 110, 120, 130, 140, 150

Number of installed switches and min. stroke (mm)

Switch quantity	1	2	3
Switch model No. / Bore size (mm)	V0		
ø40	20	20	35
ø50	20	20	35
ø63	20	20	35
ø80	20	20	35
ø100	20	20	35

Switch specifications

Item	2-wire reed	
	V0	
Applications	For relay, programmable controller	
Load voltage	12/24 VDC	110 VAC
Load current	5 to 50 mA	7 to 20 mA
Internal voltage drop	3.0 V or less (with 40 mA load current)	
Indicator	LED (Lit when ON)	
Leakage current	0 mA	
Weight g	1 m:63 3 m:170 5 m:277	

Cylinder weight table (the weight of the switches is when there are 2 cylinder switches.)

(Unit: g)

Stroke (mm) / Bore size (mm)	20	30	40	50	60	70	80	90	100
ø40	546	599	652	705	758	811	864	917	970
ø50	841	925	1009	1093	1177	1261	1345	1429	1513
ø63	1199	1309	1419	1529	1639	1749	1859	1969	2079
ø80	1995	2169	2343	2517	2691	2865	3039	3213	3387
ø100	2893	3120	3347	3574	3801	4028	4255	4482	4709

Theoretical thrust table

(Unit: N)

Bore size (mm)	Operating direction	Working pressure MPa											
		0.05	0.1	0.15	0.2	0.3	0.4	0.5	0.6	0.7	0.8	0.9	1.0
ø40	Push	-	$1.26x10^2$	$1.88x10^2$	$2.51x10^2$	$3.77x10^2$	$5.03x10^2$	$6.28x10^2$	$7.54x10^2$	$8.80x10^2$	$1.01x10^3$	$1.13x10^3$	$1.26x10^3$
	Pull	-	$1.06x10^2$	$1.58x10^2$	$2.11x10^2$	$3.17x10^2$	$4.22x10^2$	$5.28x10^2$	$6.33x10^2$	$7.39x10^2$	$8.44x10^2$	$9.50x10^2$	$1.06x10^3$
ø50	Push	-	$1.96x10^2$	$2.95x10^2$	$3.93x10^2$	$5.89x10^2$	$7.85x10^2$	$9.82x10^2$	$1.18x10^3$	$1.37x10^3$	$1.57x10^3$	$1.77x10^3$	$1.96x10^3$
	Pull	-	$1.65x10^2$	$2.47x10^2$	$3.30x10^2$	$4.95x10^2$	$6.60x10^2$	$8.25x10^2$	$9.90x10^2$	$1.15x10^3$	$1.32x10^3$	$1.48x10^3$	$1.65x10^3$
ø63	Push	$1.56x10^2$	$3.12x10^2$	$4.68x10^2$	$6.23x10^2$	$9.35x10^2$	$1.25x10^3$	$1.56x10^3$	$1.87x10^3$	$2.18x10^3$	$2.49x10^3$	$2.81x10^3$	$3.12x10^3$
	Pull	$1.40x10^2$	$2.80x10^2$	$4.20x10^2$	$5.61x10^2$	$8.41x10^2$	$1.12x10^3$	$1.40x10^3$	$1.68x10^3$	$1.96x10^3$	$2.24x10^3$	$2.52x10^3$	$2.80x10^3$
ø80	Push	$2.51x10^2$	$5.03x10^2$	$7.54x10^2$	$1.01x10^3$	$1.51x10^3$	$2.01x10^3$	$2.51x10^3$	$3.02x10^3$	$3.52x10^3$	$4.02x10^3$	$4.52x10^3$	$5.03x10^3$
	Pull	$2.27x10^2$	$4.54x10^2$	$6.80x10^2$	$9.07x10^2$	$1.36x10^3$	$1.81x10^3$	$2.27x10^3$	$2.72x10^3$	$3.17x10^3$	$3.63x10^3$	$4.08x10^3$	$4.54x10^3$
ø100	Push	$3.93x10^2$	$7.85x10^2$	$1.18x10^3$	$1.57x10^3$	$2.36x10^3$	$3.14x10^3$	$3.93x10^3$	$4.71x10^3$	$5.50x10^3$	$6.28x10^3$	$7.07x10^3$	$7.85x10^3$
	Pull	$3.57x10^2$	$7.15x10^2$	$1.07x10^3$	$1.43x10^3$	$2.14x10^3$	$2.86x10^3$	$3.57x10^3$	$4.29x10^3$	$5.00x10^3$	$5.72x10^3$	$6.43x10^3$	$7.15x10^3$

How to order

SSD-KL4 - 50 - 40 - V0 - D - N - LB - I

- Model No.
- Ⓐ Bore size
- Ⓑ Stroke
- Ⓒ Switch model No. *4
- Ⓓ Switch quantity
- Ⓔ Option
- Ⓕ Mounting bracket *1 *2
- Ⓖ Accessory *3

Code	Description
Ⓐ Bore size (mm)	
40	ø40
50	ø50
63	ø63
80	ø80
100	ø100
Ⓑ Stroke (mm)	
Refer to the stroke table below.	

Ⓒ Switch model No.

Lead wire Straight type	Contact	Voltage AC	Voltage DC	Indicator	Lead wire
V0*	Reed	●	●	1-color LED	2-wire

*** Lead wire length**	
Blank	1 m (standard)
3	3 m (option)
5	5 m (option)

Ⓓ Switch quantity	
R	1 on rod side
H	1 on head side
D	2
T	3

Ⓔ Option	
Blank	Rod end female thread
N	Rod end male thread

Ⓕ Mounting bracket	
LB	Axial foot type
LB2	Axial foot (compact)
CB	Clevis bracket (pin and snap ring attached)
CB2	Clevis bracket (compact)(Pin and snap ring attached)
FA	Rod side flange
FB	Head side flange

Ⓖ Accessory (Rod end male thread"N"is selected.)	
I	Rod eye
I2	Rod eye (compact)
Y	Rod clevis (pin and snap ring attached)
Y2	Rod clevis (compact)(Pin and snap ring attached)

⚠ Precautions for model No. selection

*1 : The mounting bracket is included at shipment.
*2 : The projection dimension of piston rod WF when LB2 or FA is selected is different from that of the standard. Refer to the dimensions on pages 1109 and 1110. The number of the specified protruding dimension will be added at the end of the model No. printed on the metal plate on the body.
*3 : "I" and "Y" cannot be selected together.
*4 : Switches are shipped with the product. Contact CKD if assembling before shipment is necessary.

[Example of model No.]

SSD-KL4-50-40-V0-D-N-LB-I

Model: Compact cylinder double acting/one side high load/with strong magnetic field proof switch

- Ⓐ Bore size : ø50 mm
- Ⓑ Stroke : 40 mm
- Ⓒ Switch model No. : Reed switch V0, lead wire length 1 m
- Ⓓ Switch quantity : 2
- Ⓔ Option : Rod end male thread
- Ⓕ Mounting bracket : Axial foot
- Ⓖ Accessory : Rod eye

[Stroke table]

Stroke (mm)		Applicable bore size ø40	ø50	ø63	ø80	ø100
Standard stroke	20	●	●	●	●	●
	30	●	●	●	●	●
	40	●	●	●	●	●
	50	●	●	●	●	●
	60	●	●	●	●	●
	70	●	●	●	●	●
	80	●	●	●	●	●
	90	●	●	●	●	●
	100	●	●	●	●	●
Min. Stroke(mm) *1		20				
Max. Stroke(mm)		150		200		
Intermediate Stroke *2		In 1 mm increments				

*1 : Refer to page 1300 for the number of installed switches and the min. stroke.
*2 : The total length is the same as that of the next longer standard stroke.

How to order switch

SW - V0

Switch model No.
(Item Ⓒ on page 1302)

How to order mounting bracket

Bore size (mm) / Mounting bracket	ø40	ø50	ø63	ø80	ø100
Foot (LB)	SSD-LB-40	SSD-LB-50	SSD-LB-63	SSD-LB-80	SSD-LB-100
Foot (LB2)	SSD-LB2-40	SSD-LB2-50	SSD-LB2-63	SSD-LB2-80	SSD-LB2-100
Flange (FA/FB)	SSD-FA-40	SSD-FA-50	SSD-FA-63	SSD-FA-80	SSD-FA-100
Clevis bracket (CB)	SSD-CB-40	SSD-CB-50	SSD-CB-63	SSD-CB-80	SSD-CB-100
Clevis bracket (CB2)	SSD-CB2-40	SSD-CB2-50	SSD-CB2-63	SSD-CB2-80	SSD-CB2-100

*1: The foot mounting bracket is provided as 2 pcs./set.

SCP*3
CMK2
CMA2
SCM
SCG
SCA2
SCS2
CKV2
CAV2/COVP/N2
SSD2
SSG
SSD
CAT
MDC2
MVC
SMG
MSD/MSDG
FC*
STK
SRL3
SRG3
SRM3
SRT3
MRL2
MRG2
SM-25
ShkAbs
FJ
FK
Spd Contr
Ending

Internal structure and parts list

● SSD-KL4-40

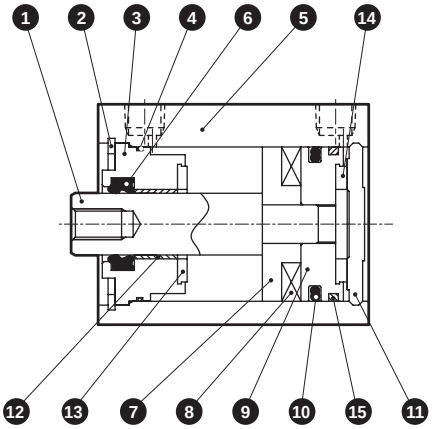

● SSD-KL4-50

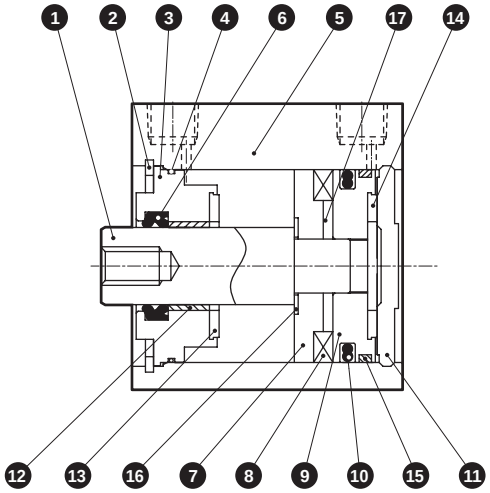

● SSD-KL4-63 to 100

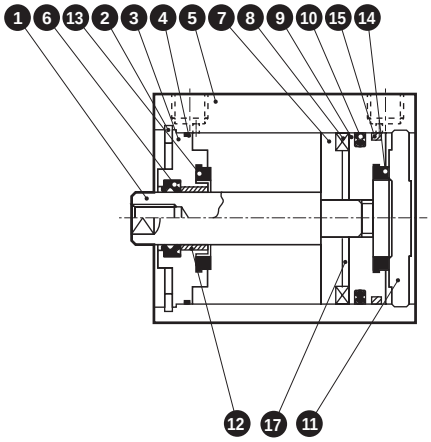

No.	Part name	Material	Remarks	No.	Part name	Material	Remarks
1	Piston rod	Steel	Industrial chrome plating	9	Piston	Aluminum alloy	
2	C-snap ring	Steel	Zinc phosphate	10	Piston packing	Nitrile rubber	
3	Rod metal	Aluminum alloy	Alumite	11	Cover	Aluminum alloy	Alumite
4	Rod metal gasket	Nitrile rubber		12	Bush	Oiles drymet	
5	Body	Aluminum alloy	Hard alumite	13	Cushion rubber R	Urethane rubber	
6	Rod packing	Nitrile rubber		14	Cushion rubber H	Urethane rubber	
7	Spacer	Aluminum alloy (resin for ø50 only)	Chromate	15	Wear ring	Polyacetal resin	
				16	Spacer washer	Stainless steel	ø50
8	Magnet	Plastic		17	Collar	Aluminum alloy	ø50 to ø100

Repair parts list

Bore size (mm)	Kit No.	Repair parts No.
ø40	SSD-K-40K	4 6 10 13 14 15
ø50	SSD-K-50K	
ø63	SSD-K-63K	
ø80	SSD-K-80K	
ø100	SSD-K-100K	

dimensions

● SSD-KL4-40 to 100

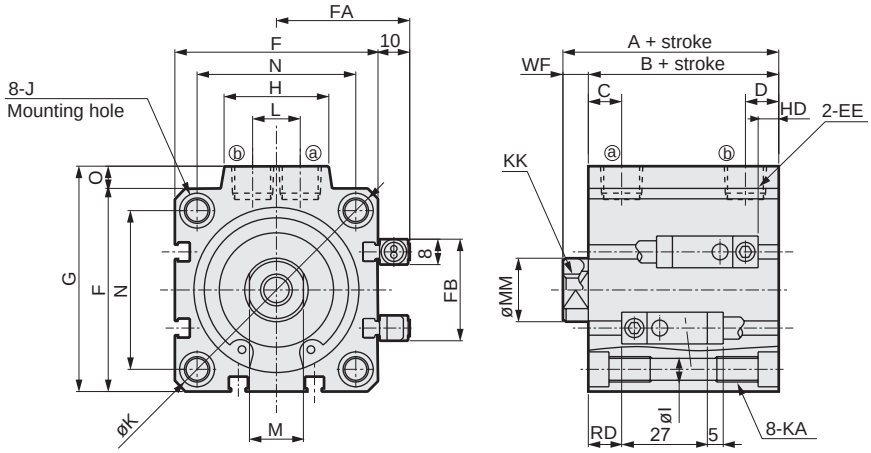

● Rod end male thread

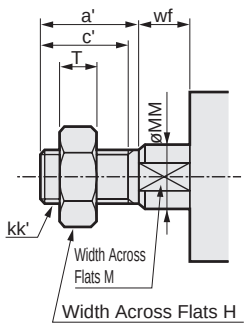

[Bore size ø100]

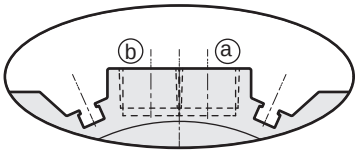

* Only for ø100, the port surface has switch grooves.

Code / Bore size	A	B	C	D	EE	F	FA	FB	G	H	I	J
ø40	66.5	59.5	12	8.5	Rc1/8	52	36	31	57	24	5.5	Spot face ø9, depth 5.5, ø5.5 through hole
ø50	68.5	60.5	10.5	10.5	Rc1/4	64	42	32	71	33	6.9	Spot face ø11, depth 6.5, ø6.9 through hole
ø63	74	66	13	11	Rc1/4	77	48.5	32	84	33	8.7	Spot face ø14, depth 9, ø8.7 through hole
ø80	83.5	73.5	16	13	Rc3/8	98	59	32	104	38	10.5	Spot face ø17.5, depth 11, ø10.5 through hole
ø100	95	83	23	15	Rc3/8	117	68.5	32	123.5	38	10.5	Spot face ø17.5, depth 11, ø10.5 through hole

Code / Bore size	K	KA	KK	L	M	MM	N	O	WF	HD	RD
ø40	69	M6 depth 11	M8 depth 13	10	14	16	40	5	7	10	20.5
ø50	86	M8 depth 13	M10 depth 15	15	17	20	50	7	8	11	20.5
ø63	103	M10 depth 25	M10 depth 15	15	17	20	60	7	8	18.5	18.5
ø80	132	M12 depth 28	M16 depth 21	15	22	25	77	6	10	23.5	21
ø100	156	M12 depth 28	M20 depth 27	15	27	30	94	6.5	12	29	25

*1: The A, B dimensions when using a custom stroke are the same as those of when using the next longer standard stroke.

● Dimensions of rod end male thread

Code / Bore size (mm)	a'	C'	H	kk'	M	MM	T	wf'
ø40	23.5	20.5	22	M 14 x 1.5	14	16	8	5
ø50	28.5	26	27	M 18 x 1.5	17	20	11	5
ø63	28.5	26	27	M 18 x 1.5	17	20	11	5
ø80	35.5	32.5	32	M 22 x 1.5	22	25	13	8
ø100	35.5	32.5	41	M 26 x 1.5	27	30	16	8

* For dimensions of individual accessories, refer to pages 1108 to 1115.

Compact cylinder double acting/high load/with strong magnetic field proof switch/with coil scraper

SSD-KG1L4 Series

● Bore size: ø40/ø50/ø63/ø80/ø100

JIS symbol

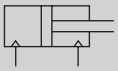

RoHS

Specifications

Item	SSD-KG1L4				
Bore size mm	ø40	ø50	ø63	ø80	ø100
Actuation	Double acting				
Working fluid	Compressed air				
Max. working pressure MPa	1.0 (≈150 psi, 10 bar)				
Min. working pressure MPa	0.15 (≈22 psi, 1.5 bar)		0.1 (≈15 psi, 1 bar)		
Proof pressure MPa	1.6 (≈230 psi, 16 bar)				
Ambient temperature °C	-10 (14°F) to 60 (140°F) (no freezing)				
Port size	Rc1/8	Rc1/4		Rc3/8	
Stroke tolerance mm	$^{+2.0}_{0}$				
Working piston speed mm/s	50 to 500		50 to 300		
Cushion	Rubber cushion				
Lubrication	Not required (use turbine oil class 1 ISO VG32 if necessary for lubrication)				
Allowable absorbed energy J	0.63	0.98	1.56	2.51	3.92

Stroke

Bore size (mm)	Standard stroke (mm)	Max. stroke (mm)	Min. stroke (mm)
ø40	20, 30, 40, 50, 60, 70, 80, 90, 100	*2) 150	20
ø50			
ø63		*2) 200	
ø80			
ø100			

*1: The custom stroke is available in 1mm increments. However, the total length is the same as that of the next longer standard stroke.
*2: Stroke over standard to maximum is available in increments of 10.
(Example) ø40: 110, 120, 130, 140, 150

Number of installed switches and min. stroke (mm)

Switch quantity	1	2	3
Switch model No. / Bore size (mm)	V0		
ø40	20	20	35
ø50	20	20	35
ø63	20	20	35
ø80	20	20	35
ø100	20	20	35

Switch specifications

Item	2-wire reed	
	VO	
Applications	For relay, programmable controller	
Load voltage	12/24 VDC	110 VAC
Load current	5 to 50 mA	7 to 20 mA
Internal voltage drop	3.0 V or less (with 40 mA load current)	
Indicator	LED (Lit when ON)	
Leakage current	O mA	
Weight g	1 m:63 3 m:170 5 m:277	

Cylinder weight table (the weight of the switches is when there are 2 cylinder switches.)

(Unit: g)

Stroke (mm) / Bore size (mm)	20	30	40	50	60	70	80	90	100
ø40	628	681	734	787	840	893	946	999	1052
ø50	960	1044	1128	1212	1296	1380	1464	1548	1632
ø63	1350	1461	1572	1683	1794	1905	2016	2127	2238
ø80	2247	2421	2595	2769	2943	3117	3291	3465	3639
ø100	3228	3455	3682	3909	4136	4363	4590	4817	5044

Theoretical thrust table

(Unit: N)

Bore size (mm)	Operating direction	Working pressure MPa										
		0.1	0.15	0.2	0.3	0.4	0.5	0.6	0.7	0.8	0.9	1.0
ø40	Push	-	$1.88x10^2$	$2.51x10^2$	$3.77x10^2$	$5.03x10^2$	$6.28x10^2$	$7.54x10^2$	$8.80x10^2$	$1.01x10^3$	$1.13x10^3$	$1.26x10^3$
	Pull	-	$1.58x10^2$	$2.11x10^2$	$3.17x10^2$	$4.22x10^2$	$5.28x10^2$	$6.33x10^2$	$7.39x10^2$	$8.44x10^2$	$9.50x10^2$	$1.06x10^3$
ø50	Push	-	$2.95x10^2$	$3.93x10^2$	$5.89x10^2$	$7.85x10^2$	$9.82x10^2$	$1.18x10^3$	$1.37x10^3$	$1.57x10^3$	$1.77x10^3$	$1.96x10^3$
	Pull	-	$2.47x10^2$	$3.30x10^2$	$4.95x10^2$	$6.60x10^2$	$8.25x10^2$	$9.90x10^2$	$1.15x10^3$	$1.32x10^3$	$1.48x10^3$	$1.65x10^3$
ø63	Push	$3.12x10^2$	$4.68x10^2$	$6.23x10^2$	$9.35x10^2$	$1.25x10^3$	$1.56x10^3$	$1.87x10^3$	$2.18x10^3$	$2.49x10^3$	$2.81x10^3$	$3.12x10^3$
	Pull	$2.80x10^2$	$4.20x10^2$	$5.61x10^2$	$8.41x10^2$	$1.12x10^3$	$1.40x10^3$	$1.68x10^3$	$1.96x10^3$	$2.24x10^3$	$2.52x10^3$	$2.80x10^3$
ø80	Push	$5.03x10^2$	$7.54x10^2$	$1.01x10^3$	$1.51x10^3$	$2.01x10^3$	$2.51x10^3$	$3.02x10^3$	$3.52x10^3$	$4.02x10^3$	$4.52x10^3$	$5.03x10^3$
	Pull	$4.54x10^2$	$6.80x10^2$	$9.07x10^2$	$1.36x10^3$	$1.81x10^3$	$2.27x10^3$	$2.72x10^3$	$3.17x10^3$	$3.63x10^3$	$4.08x10^3$	$4.54x10^3$
ø100	Push	$7.85x10^2$	$1.18x10^3$	$1.57x10^3$	$2.36x10^3$	$3.14x10^3$	$3.93x10^3$	$4.71x10^3$	$5.50x10^3$	$6.28x10^3$	$7.07x10^3$	$7.85x10^3$
	Pull	$7.15x10^2$	$1.07x10^3$	$1.43x10^3$	$2.14x10^3$	$2.86x10^3$	$3.57x10^3$	$4.29x10^3$	$5.00x10^3$	$5.72x10^3$	$6.43x10^3$	$7.15x10^3$

How to order

SSD-KG1L4 - 50 - 40 - V0 - D - N - LB - I

- Model No.
- Ⓐ Bore size
- Ⓑ Stroke
- Ⓒ Switch model No. *4
- Ⓓ Switch quantity
- Ⓔ Option
- Ⓕ Mounting bracket *1 *2
- Ⓖ Accessory *3

Code	Description
Ⓐ Bore size (mm)	
40	ø40
50	ø50
63	ø63
80	ø80
100	ø100
Ⓑ Stroke (mm)	
Refer to the stroke table below.	

Ⓒ Switch model No.

Axial lead wire	Contact	Voltage AC	Voltage DC	Indicator	Lead wire
V0*	Reed	●	●	1-color LED	2-wire

* Lead wire length	
Blank	1 m (standard)
3	3 m (option)
5	5 m (option)

Ⓓ Switch quantity	
R	1 on rod side
H	1 on head side
D	2
T	3

Ⓔ Option	
Blank	Rod end female thread
N	Rod end male thread

Ⓕ Mounting bracket	
LB	Axial foot
LB2	Axial foot (compact)
CB	Clevis bracket (pin and snap ring included)
CB2	Clevis bracket (compact) (pin and snap ring included)
FA	Rod side flange
FB	Head side flange

Ⓖ Accessory (available when rod end male thread "N" is selected)	
I	Rod eye
I2	Rod eye (compact)
Y	Rod clevis (pin and snap ring included)
Y2	Rod clevis (compact) (pin and snap ring included)

⚠ Precautions for model No. selection

*1 : The mounting bracket is included at shipment.
*2 : The projection dimension of piston rod WF when LB2 or FA is selected is different from that of the standard. Refer to the dimensions on pages 1109 and 1110. The number of the specified protruding dimension will be added at the end of the model No. printed on the metal plate on the body.
*3 : "I" and "Y" cannot be selected together.
*4 : Switches are shipped with the product. Contact CKD if assembling before shipment is necessary.

[Example of model No.]

SSD-KG1L4-50-40-V0-D-N-LB-I

Model: Compact cylinder double acting/high load/with coil scraper/with strong magnetic field proof switch

- Ⓐ Bore size : ø50 mm
- Ⓑ Stroke : 40 mm
- Ⓒ Switch model No. : Reed switch V0, lead wire length 1 m
- Ⓓ Switch quantity : 2
- Ⓔ Option : Rod end male thread
- Ⓕ Mounting bracket : Axial foot
- Ⓖ Accessory : Rod eye

[Stroke table]

Stroke (mm)		Applicable bore size ø40	ø50	ø63	ø80	ø100
Standard stroke	20	●	●	●	●	●
	30	●	●	●	●	●
	40	●	●	●	●	●
	50	●	●	●	●	●
	60	●	●	●	●	●
	70	●	●	●	●	●
	80	●	●	●	●	●
	90	●	●	●	●	●
	100	●	●	●	●	●
Min. stroke (mm) *1		20				
Max. stroke (mm)		150		200		
Custom stroke *2		In 1 mm increments				

*1 : Refer to page 1306 for the number of installed switches and the min. stroke.
*2 : The total length is the same as that of the next longer standard stroke.

How to order switch

SW - V0

Switch model No.
(Item Ⓒ on page 1308)

How to order mounting bracket

Bore size (mm) / Mounting bracket	ø40	ø50	ø63	ø80	ø100
Foot (LB)	SSD-LB-40	SSD-LB-50	SSD-LB-63	SSD-LB-80	SSD-LB-100
Foot (LB2)	SSD-LB2-40	SSD-LB2-50	SSD-LB2-63	SSD-LB2-80	SSD-LB2-100
Flange (FA/FB)	SSD-FA-40	SSD-FA-50	SSD-FA-63	SSD-FA-80	SSD-FA-100
Clevis bracket (CB)	SSD-CB-40	SSD-CB-50	SSD-CB-63	SSD-CB-80	SSD-CB-100
Clevis bracket (CB2)	SSD-CB2-40	SSD-CB2-50	SSD-CB2-63	SSD-CB2-80	SSD-CB2-100

*1: The foot mounting bracket is provided as 2 pcs./set.

Internal structure and parts list

● SSD-KG1L4-40

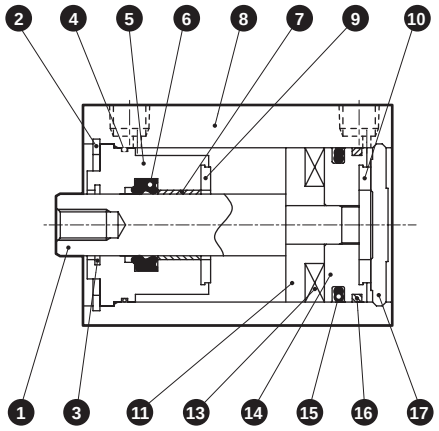

● SSD-KG1L4-50

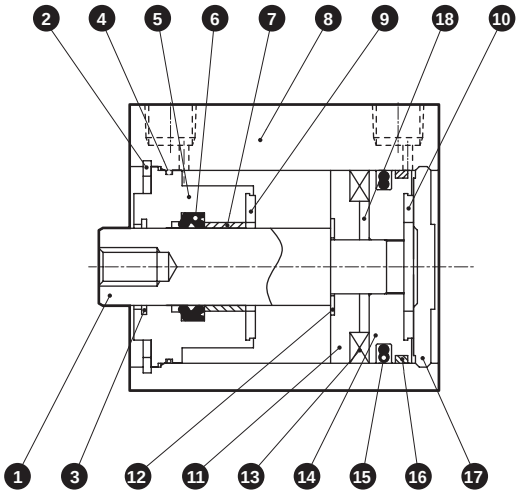

● SSD-KG1L4-63 to 100

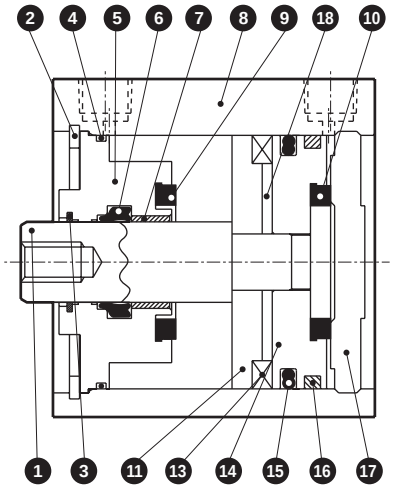

No.	Part name	Material	Remarks
1	Piston rod	Steel	Industrial chrome plating
2	C-snap ring for hole	Steel	Zinc phosphate
3	Coil scraper	Phosphor bronze	
4	Rod metal gasket	Nitrile rubber	
5	Rod metal	Aluminum alloy	Chromate
6	Rod packing	Nitrile rubber	
7	Bush	Oiles drymet	
8	Tube body	Aluminum alloy	Hard alumite
9	Cushion rubber R	Urethane rubber	
10	Cushion rubber H	Urethane rubber	

No.	Part name	Material	Remarks
11	Spacer	Aluminum alloy (resin for ø50 only)	Chromate
12	Spacer washer	Stainless steel	ø50
13	Magnet	Plastic	
14	Piston	Aluminum alloy	Chromate
15	Piston packing	Nitrile rubber	
16	Wear ring	Polyacetal resin	
17	Cover	Aluminum alloy	Chromate
18	Collar	Aluminum alloy	ø50 to ø100

Repair parts list

Part name / Bore size (mm)	Kit No.	Repair parts No.
ø40	SSD-KG1-40K	3 4 6 9 10 15 16
ø50	SSD-KG1-50K	
ø63	SSD-KG1-63K	
ø80	SSD-KG1-80K	
ø100	SSD-KG1-100K	

Dimensions

● SSD-KG1L4-40 to 100

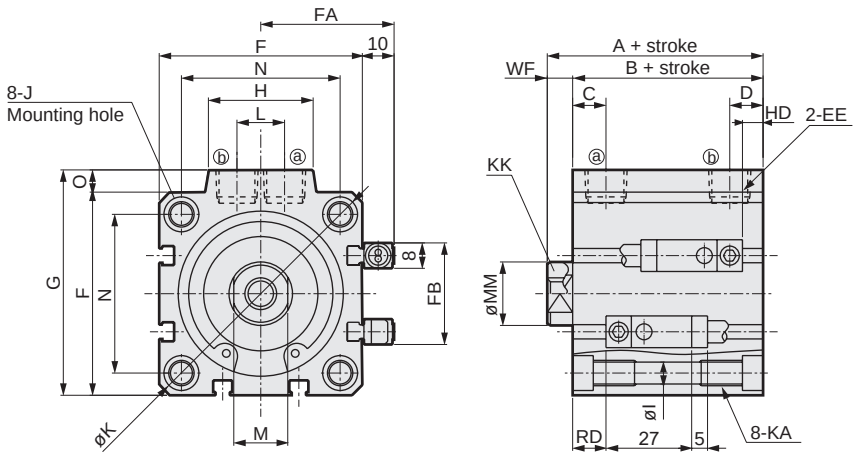

● Rod end male thread

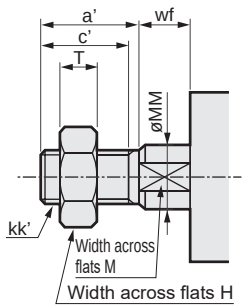

[Bore size ø100]

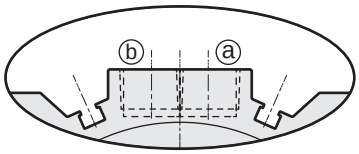

* Only for ø100, the port surface has switch grooves.

Code / Bore size	A	B	C	D	EE	F	FA	FB	G	H	I	J
ø40	76.5	69.5	12	8.5	Rc1/8	52	36	31	57	24	5.5	Spot face ø9, depth 5.5, ø5.5 through hole
ø50	78.5	70.5	10.5	10.5	Rc1/4	64	42	32	71	33	6.9	Spot face ø11, depth 6.5, ø6.9 through hole
ø63	84	76	13	11	Rc1/4	77	48.5	32	84	33	8.7	Spot face ø14, depth 9, ø8.7 through hole
ø80	93.5	83.5	16	13	Rc3/8	98	59	32	104	38	10.5	Spot face ø17.5, depth 11, ø10.5 through hole
ø100	105	93	23	15	Rc3/8	117	68.5	32	123.5	38	10.5	Spot face ø17.5, depth 11, ø10.5 through hole

Code / Bore size	K	KA	KK	L	M	MM	N	O	WF	HD	RD
ø40	69	M6 depth 11	M8 depth 13	10	14	16	40	5	7	10	30.5
ø50	86	M8 depth 13	M10 depth 15	15	17	20	50	7	8	11	30.5
ø63	103	M10 depth 25	M10 depth 15	15	17	20	60	7	8	18.5	28.5
ø80	132	M12 depth 28	M16 depth 21	15	22	25	77	6	10	23.5	31
ø100	156	M12 depth 28	M20 depth 27	15	27	30	94	6.5	12	29	35

*1: The A, B dimensions when using a custom stroke are the same as those of when using the next longer standard stroke.

● Dimensions of rod end male thread

Code / Bore size (mm)	a'	C'	H	kk'	M	MM	T	wf'
ø40	23.5	20.5	22	M14x1.5	14	16	8	5
ø50	28.5	26	27	M18x1.5	17	20	11	5
ø63	28.5	26	27	M18x1.5	17	20	11	5
ø80	35.5	32.5	32	M22x1.5	22	25	13	8
ø100	35.5	32.5	41	M26x1.5	27	30	16	8

* For dimensions of individual accessories, refer to pages 1108 to 1115.

Common to SSD Series (2-color LED, off-delay, AC magnetic field proof, T1* With switch) dimensions

● SSD-*L1-12, 16 (2-color LED, off-delay, T2Y$^{H}/_{V}$, T3Y$^{H}/_{V}$, T2J$^{H}/_{V}$)
SSD-*L-20, 25 (2-color LED, off-delay, T2Y$^{H}/_{V}$, T3Y$^{H}/_{V}$, T2J$^{H}/_{V}$)

ø12/ø16

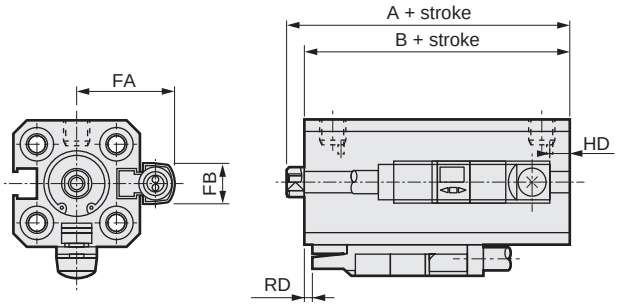

ø20/ø25

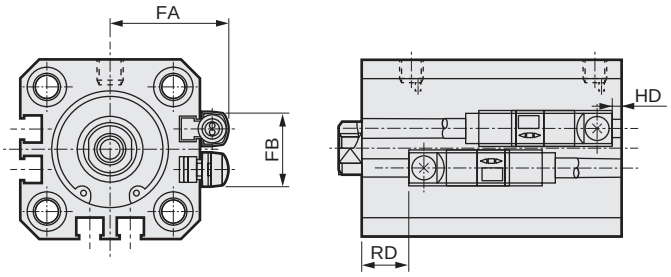

Code / Bore size (mm)	FA	FB	T2Y$^{H}/_{V}$, T3Y$^{H}/_{V}$, T2J$^{H}/_{V}$ RD	T2Y$^{H}/_{V}$, T3Y$^{H}/_{V}$, T2J$^{H}/_{V}$ HD	SSD-*L1 SSD-XL1 SSD-OL1 A	SSD-*L1 SSD-XL1 SSD-OL1 B	SSD-YL1 A	SSD-YL1 B	SSD-ML1 A	SSD-ML1 B
ø12	18.8	8	2.5	4.5	30.5	27	40.5	37	35.5	32
ø16	20.8	8	2.5	4.5	30.5	27	40.5	27	35.5	32
ø20	24.3	16	5	1.5	-	-	-	-	-	-
ø25	26.3	17	8	1.5	-	-	-	-	-	-

● SSD*-L1-12, 16 (T1* with switch T1$^{H}/_{V}$)
SSD-L-20, 25 (for AC magnetic field, with T1* switch, T2YD, T2YDT, T1$^{H}/_{V}$)

ø12/ø16

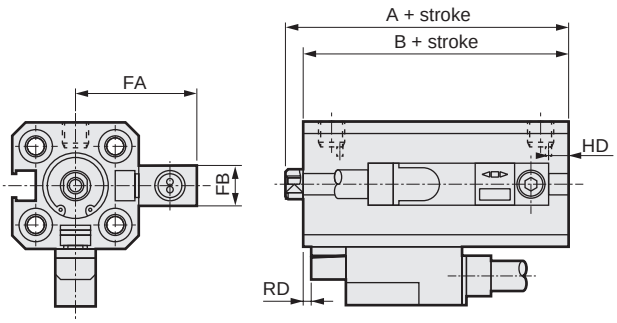

ø20/ø25

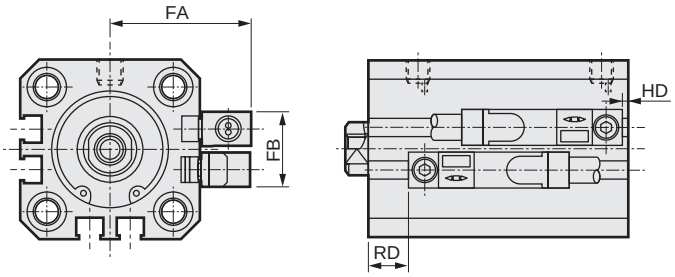

Code / Bore size (mm)	FA	FB	RD	HD	SSD-*L1 SSD-XL1 SSD-OL1 A	SSD-*L1 SSD-XL1 SSD-OL1 B	SSD-YL1 A	SSD-YL1 B	SSD-ML1 A	SSD-ML1 B
ø12	23.8	8	2.5	4.5	30.5	27	40.5	37	35.5	32
ø16	25.8	8	2.5	4.5	30.5	27	40.5	27	35.5	32
ø20	29.3	16	5	1.5	-	-	-	-	-	-
ø25	31.3	17	8	1.5	-	-	-	-	-	-

Common to SSD Series (2-color LED, off-delay, AC magnetic field proof, with T1*, T8* switches) dimensions

● SSD-*L-32 to 160 (2-color LED,Off-delay,T8* with switch, T2Y$^{H}/_{V}$, T3Y$^{H}/_{V}$,T2J$^{H}/_{V}$,T8$^{H}/_{V}$)

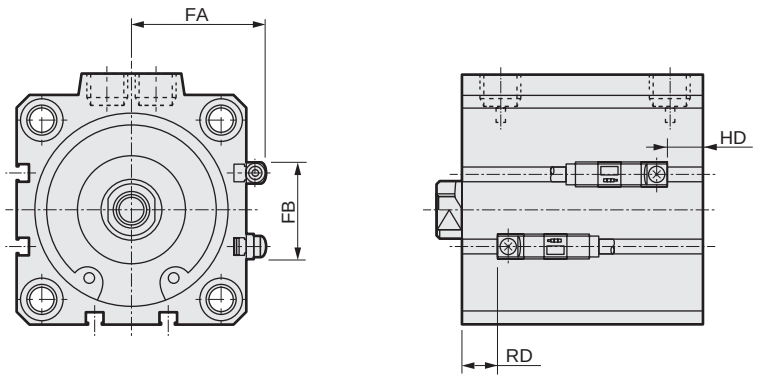

Code / Bore size (mm)	FA	FB	T2Y$^{H}/_{V}$, T3Y$^{H}/_{V}$,T2J$^{H}/_{V}$		T8$^{H}/_{V}$		
			RD	HD	RD	HD	
ø32	28.8	24	7.5	2	-	-	
ø40	32.3	31	10.5	5.5	6	1	
ø50	38.3	32	11	6	6.5	1.5	
ø63	44.8	32	11.5	11	7	6.5	
ø80	55.3	32	14	16	9.5	11.5	
ø100	64.8	32	18	21.5	13.5	17	
ø125	77.5	48	28	23	23.5	18.5	
ø140	85.5	48	31.5	29.5	27	25	
ø160	95.5	52	37.5	32.5	33	28	

● SSD-*L-32 to 160 (AC magnetic field,T1* with switch, T2YD, T2YDT, T1$^{H}/_{V}$)

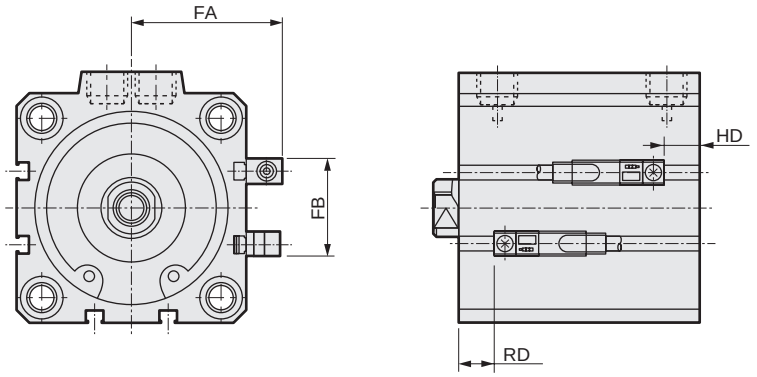

Code / Bore size (mm)	FA	FB	RD	HD	
ø32	33.8	24	7.5	2	
ø40	37.3	31	10.5	5.5	
ø50	43.3	32	11	6	
ø63	49.8	32	11.5	11	
ø80	60.3	32	14	16	
ø100	69.8	32	18	21.5	
ø125	82.5	48	28	23	
ø140	90.5	48	31.5	29.5	
ø160	100.5	52	37.5	32.5	

SCP*3
CMK2
CMA2
SCM
SCG
SCA2
SCS2
CKV2
CAV2/COVP/N2
SSD2
SSG
SSD
CAT
MDC2
MVC
SMG
MSD/MSDG
FC*
STK
SRL3
SRG3
SRM3
SRT3
MRL2
MRG2
SM-25
ShkAbs
FJ
FK
Spd Contr
Ending

Common to SSD-K Series (2-color LED, off-delay, AC magnetic field proof, with T1*, T8* switches) dimensions

● SSD-KL(1)-12 to 25 (2-color LED, off-delay, T8* with switch T2Y$^{H}/_{V}$, T3Y$^{H}/_{V}$, T2J$^{H}/_{V}$, T8$^{H}/_{V}$)

ø12/ø16

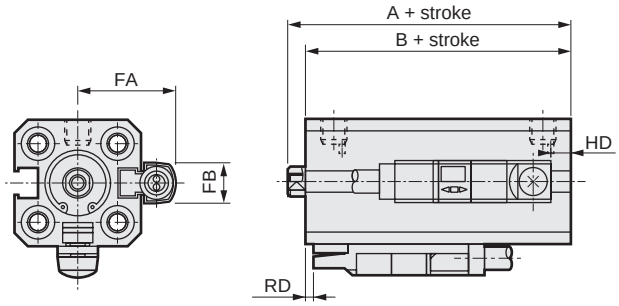

ø20/ø25

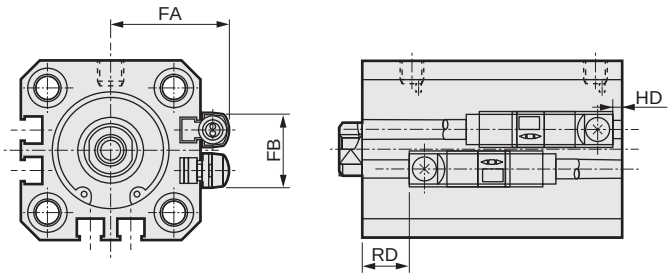

Code / Bore size (mm)	FA	FB	T2Y$^{H}/_{V}$, T3Y$^{H}/_{V}$, T2J$^{H}/_{V}$		T8$^{H}/_{V}$		
			RD*1	HD*1	RD	HD	
ø12	18.8	8	4.5	1	—	—	
ø16	20.8	8	4	1.5	—	—	
ø20	24.3	16	8.5 (13.5)	4.5 (11)	2.5 (7.5)	0 (6.5)	
ø25	26.3	17	12 (17)	4 (12.5)	6 (11)	0 (8)	

*1: When longer than ø20: 100 mm stroke or ø25: 150 mm stroke, HD and RD dimensions are indicated in ( ).

● SSD-KL-12 to 25 (for AC magnetic field, with T1* switch, T2YD, T2YDT, T1$^{H}/_{V}$)

ø12/ø16

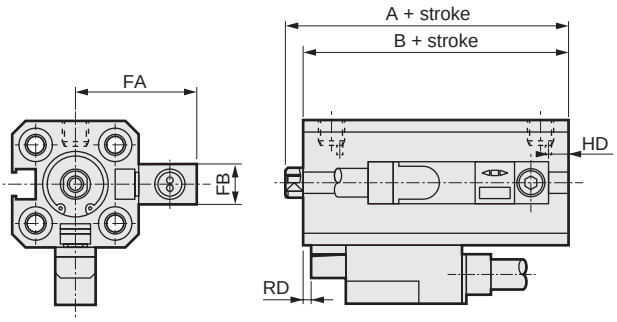

ø20/ø25

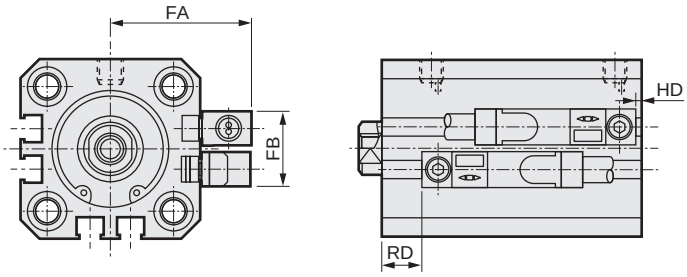

Code / Bore size (mm)	FA	FB	RD*1	HD*1	
ø12	23.8	8	4.5	1	
ø16	25.8	8	4	1.5	
ø20	29.3	16	8.5 (13.5)	4.5 (11)	
ø25	31.3	17	12 (17)	4 (12.5)	

*1: When longer than ø20: 100 mm stroke or ø25: 150 mm stroke, HD and RD dimensions are indicated in ( ).

SSD-K Series common dimensions (with 2-color LED, off-delay, AC magnetic field, T1* and T8* switches)

● SSD-KL-32 to 100 (2-color LED, off-delay, With T8* switch, T2Y$^{H}/_{V}$,T3Y$^{H}/_{V}$,T2J$^{H}/_{V}$,T8$^{H}/_{V}$)

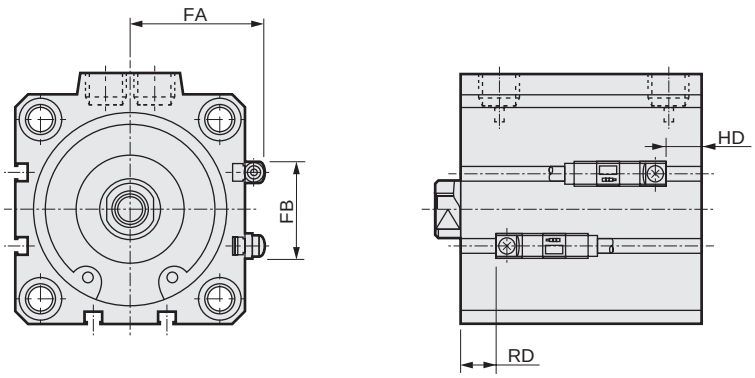

Code / Bore size (mm)	FA	FB	T2Y$^{H}/_{V}$, T3Y$^{H}/_{V}$, T2J$^{H}/_{V}$		T8$^{H}/_{V}$		
			RD*1	HD*1	RD	HD	
ø32	28.8	24	12.5 (12.5)	7 (14.5)	8 (8)	3.5 (10)	
ø40	32.3	31	18 (18)	8 (17.5)	13.5 (13.5)	3.5 (13)	
ø50	38.3	32	18.5 (23.5)	8.5 (17.5)	14 (19)	4 (13)	
ø63	44.8	32	16.5 (21.5)	16 (21.5)	12 (17)	11.5 (17)	
ø80	55.3	32	19 (24)	20.5 (26.5)	14.5 (19.5)	16 (22)	
ø100	64.8	32	23 (28)	26.5 (32)	18.5 (23.5)	22 (27.5)	

*1: When longer than ø32 to 50: 150 mm stroke or ø63 to 100: 200 mm stroke, HD and RD dimensions are indicated in ( ).

● SSD-KL-32 to 100 (for AC magnetic field,T1* with switch, T2YD, T2YDT, T1$^{H}/_{V}$)

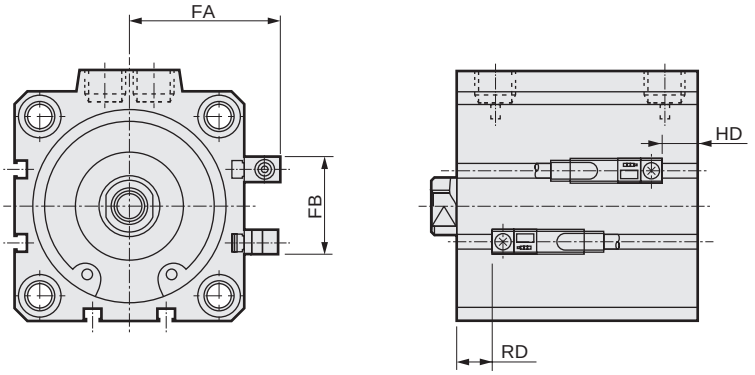

Code / Bore size (mm)	FA	FB	RD*1	HD*1	
ø32	33.8	24	12.5 (12.5)	7 (14.5)	
ø40	37.3	31	18 (18)	8 (17.5)	
ø50	43.3	32	18.5 (23.5)	8.5 (17.5)	
ø63	49.8	32	16.5 (21.5)	16 (21.5)	
ø80	60.3	32	19 (24)	20.5 (26.5)	
ø100	69.8	32	23 (28)	26.5 (32)	

*1: When longer than ø32 to 50: 150 mm stroke or ø63 to 100: 200 mm stroke, HD and RD dimensions are indicated in ( ).

SCP*3
CMK2
CMA2
SCM
SCG
SCA2
SCS2
CKV2
CAV2/ COVP/N2
SSD2
SSG
SSD
CAT
MDC2
MVC
SMG
MSD/ MSDG
FC*
STK
SRL3
SRG3
SRM3
SRT3
MRL2
MRG2
SM-25
ShkAbs
FJ
FK
Spd Contr
Ending

SSD-WL Series common dimensions (with 2-color LED, off-delay, AC magnetic field, T1* and T8* switches)

● SSD-WL-12 to 25 (2-color LED, off-delay, T8* with switch, T2Y$^{H}/_{V}$, T3Y$^{H}/_{V}$, T2J$^{H}/_{V}$, T8$^{H}/_{V}$)

ø12/ø16

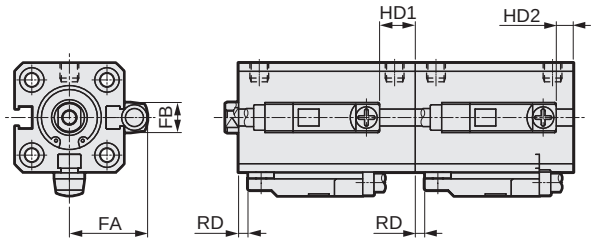

ø20/ø25

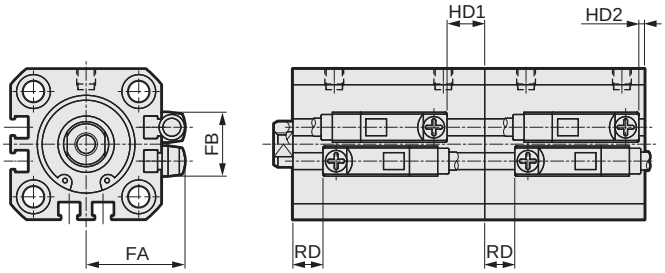

Code / Bore size (mm)	FA	FB	T2Y$^{H}/_{V}$, T3Y$^{H}/_{V}$, T2J$^{H}/_{V}$			T8$^{H}/_{V}$			
			RD	HD1	HD2	RD	HD1	HD2	
ø12	18.8	8	2.5	9.5	4.5	-	-	-	
ø16	20.8	8	2.5	9.5	4.5	-	-	-	
ø20	24.3	16	5	8	1.5	-	-	-	
ø25	26.3	17	8	10	1.5	-	-	-	

● SSD-WL-12 to 25 (for AC magnetic field, with T1* switch, T2YD, T2YDT, T1$^{H}/_{V}$)

ø12/ø16

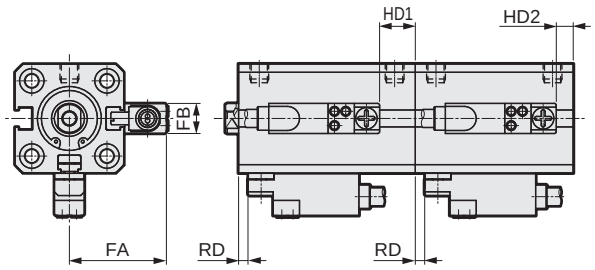

ø20/ø25

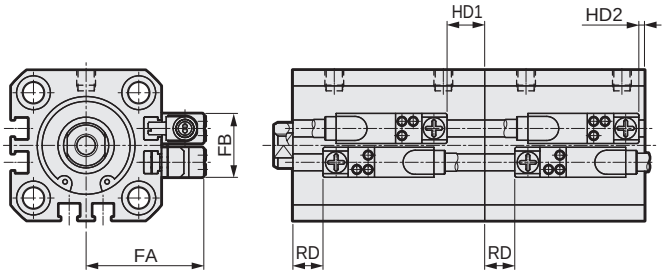

Code / Bore size (mm)	FA	FB	RD	HD1	HD2	
ø12	23.8	8	2.5	9.5	4.5	
ø16	25.8	8	2.5	9.5	4.5	
ø20	29.3	16	5	8	1.5	
ø25	31.3	17	8	10	1.5	

SSD-W Series common (with 2-color LED, off-delay, AC magnetic field, with T1*, T8* switches) Dimensions

● SSD-WL-32 to 100 (2-color LED, off-delay, with T8* switch, T2Y$^{H}/_{V}$,T3Y$^{H}/_{V}$,T2J$^{H}/_{V}$,T8$^{H}/_{V}$)

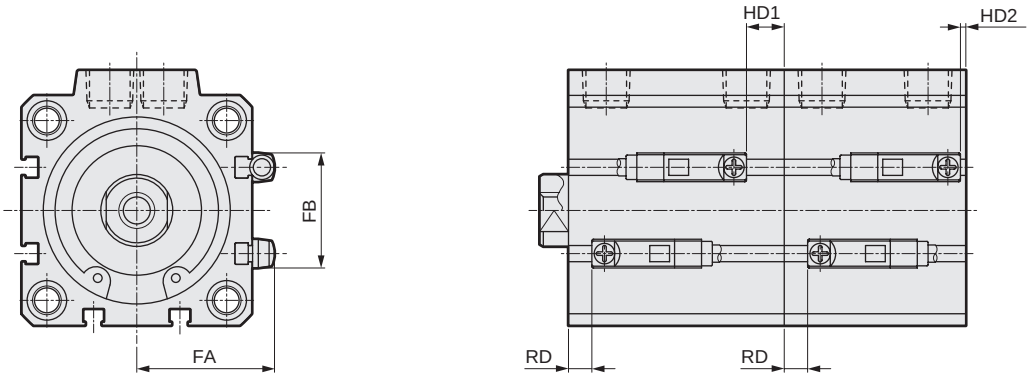

Code / Bore size (mm)	FA	FB	T2Y$^{H}/_{V}$, T3Y$^{H}/_{V}$, T2J$^{H}/_{V}$			T8$^{H}/_{V}$			
			RD	HD1	HD2	RD	HD1	HD2	
ø32	28.8	24	7.5	9.5	2	-	-	-	
ø40	32.3	31	10.5	15	5.5	6	10.5	1	
ø50	38.3	32	11	15	6	6.5	10.5	1.5	
ø63	44.8	32	11.5	16.5	11	7	12	6.5	
ø80	55.3	32	14	21.5	16	9.5	17	11.5	
ø100	64.8	32	18	27	21.5	13.5	12.5	7	

● SSD-WL-32 to 100 (for AC magnetic field,T1* with switch, T2YD, T2YDT, T1$^{H}/_{V}$)

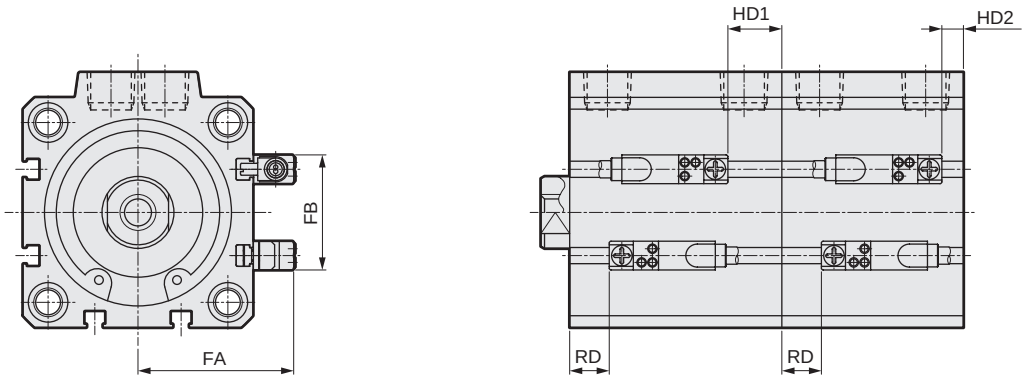

Code / Bore size (mm)	FA	FB	RD	HD1	HD2	
ø32	33.8	24	7.5	9.5	2	
ø40	37.3	31	10.5	15	5.5	
ø50	43.3	32	11	15	6	
ø63	49.8	32	11.5	16.5	11	
ø80	60.3	32	14	21.5	16	
ø100	69.8	32	18	27	21.5	

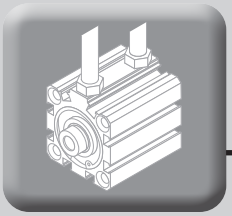

Introduction to made-to-order products

Cylinder switch can be mounted from 4 surfaces!

- Series: All SSD Series
- Corresponding bore size: 25 to ø80 (ø100 or more is 4 surface mounting as standard.)

How to order

Contact CKD for model No.

Dimensions

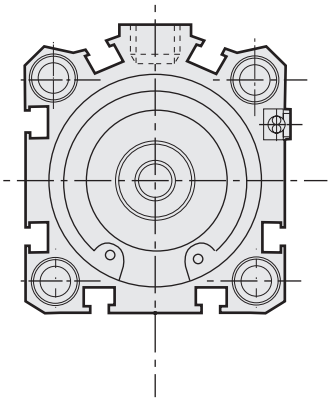

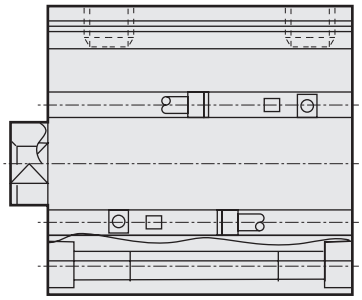

MEMO

SCP*3
CMK2
CMA2
SCM
SCG
SCA2
SCS2
CKV2
CAV2/COVP/N2
SSD2
SSG
SSD
CAT
MDC2
MVC
SMG
MSD/MSDG
FC*
STK
SRL3
SRG3
SRM3
SRT3
MRL2
MRG2
SM-25
ShkAbs
FJ
FK
Spd Contr
Ending

Dimensions with accessories (Mounting bracket: LB)

● ø12 to ø32

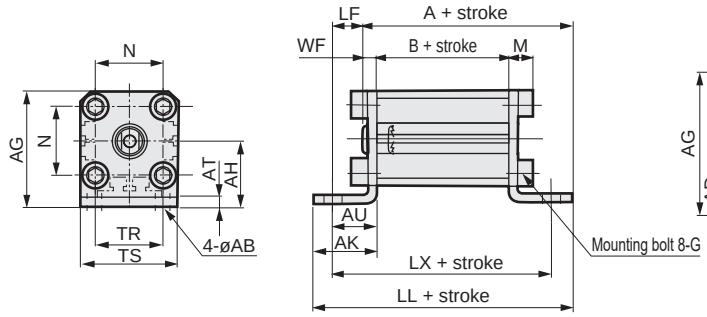

● ø40 to ø100

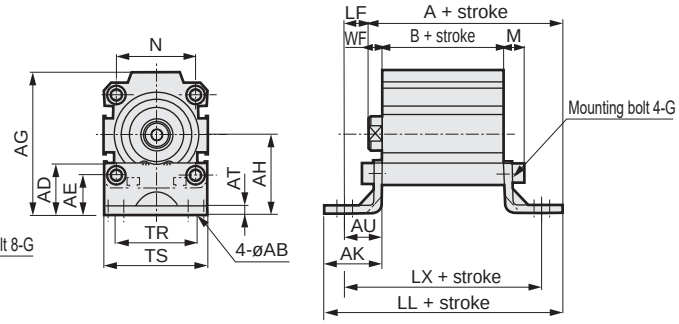

Rod end male thread

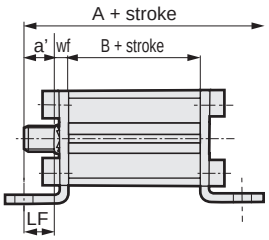

Rod end male thread

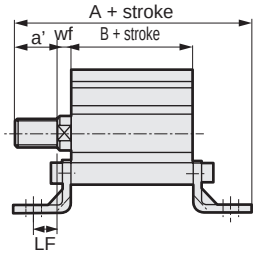

SSD (double acting/single rod), SSD-T (heat resistance), SSD-F (fine speed), SSD-O (low speed) dimensions table

Code / Bore size (mm)	Common dimensions													Female thread												Male thread								
	AB	AD	AE	AG	AH	AK	AT	AU	G	N	TR	TS	M	WF	LF	No switch				With switch *1				a'	wf	LF	No switch				With switch *1			
																A	B	LL	LX	A	B	LL	LX				A	B	LL	LX	A	B	LL	LX
ø12	6	-	-	29.5	17	18	2.3	12	M4x12	15.5	16	25	6.3	3.5	8.5	38.5	17	53	41	43.5	22	58	46	10.5	3.5	8.5	49	17	53	41	54	22	58	46
ø16	6	-	-	33.5	19	18	2.3	12	M4x12	20	16	29	6.3	3.5	8.5	38.5	17	53	41	43.5	22	58	46	12	3.5	8.5	50.5	17	53	41	55.5	22	58	46
ø20	7	-	-	42	24	24	3.2	16	M6x16	25.5	24	36	9.2	4.5	11.5	48	19.5	67.5	51.5	58	29.5	77.5	61.5	14	4.5	11.5	62	19.5	67.5	51.5	72	29.5	77.5	61.5
ø25	7	-	-	46	26	24	3.2	16	M6x16	28	28	40	9.2	5	11	51.5	22.5	70.5	54.5	61.5	32.5	80.5	64.5	17.5	5	11	69	22.5	70.5	54.5	79	32.5	80.5	64.5
ø32	7	-	-	53.5	31	24	3.2	16	M6x16	34	34	45	9.2	7	9	54	23	71	55	64	33	81	65	23.5	5	11	75.5	23	71	55	85.5	33	81	65
ø40	7	26	20	71	40	29	4.5	19	M6x16	40	40	52	10	7	12	65.5	29.5	87.5	67.5	75.5	39.5	97.5	77.5	23.5	5	14	87	29.5	87.5	67.5	97	39.5	97.5	77.5
ø50	9	23	15	79	40	34	4.5	22	M8x20	50	46	64	13	8	14	72.5	30.5	98.5	74.5	82.5	40.5	108.5	84.5	28.5	5	17	98	30.5	98.5	74.5	108	40.5	108.5	84.5
ø63	11	33	21	96.5	51	40	4.5	25	M10x25	60	60	77	15	8	17	84	36	116	86	94	46	126	96	28.5	5	20	109.5	36	116	86	119.5	46	126	96
ø80	13	42	23	116.5	61.5	50	6	35	M12x40	77	77	98	18	10	25	103.5	43.5	143.5	113.5	113.5	53.5	153.5	123.5	35.5	8	27	137	43.5	143.5	113.5	147	53.5	153.5	123.5
ø100	13	48	22	134	69	50	6	35	M12x40	94	94	117	18	12	23	115	53	153	123	125	63	163	133	35.5	8	27	146.5	53	153	123	156.5	63	163	133

*2: LB cannot be selected when B + stroke is at or less than the stroke value below.
ø20: 27 or less; ø63: 42 or less; ø80, ø100: 69 or less
The same applies to variations not listed on this page.

*1: When the stroke with switch is 5 mm, dimensions are as below.

Bore size	Female thread				Male thread			
	A	B	LL	LX	A	B	LL	LX
ø12	48.5	27	63	51	59	27	63	51
ø16	48.5	27	63	51	60.5	27	63	51

SSD-K (double acting/high load), SSD-K-*C (rubber-air cushioned), SSD-KF (high load/fine speed), SSD-KU (low friction) dimensions table

Code / Bore size (mm)	Common dimensions													For female thread *1												For male thread *1								
	AB	AD	AE	AG	AH	AK	AT	AU	G	N	TR	TS	M	WF	LF	No switch				With switch *2				a'	wf	LF	No switch				With switch *2			
																A	B	LL	LX	A	B	LL	LX				A	B	LL	LX	A	B	LL	LX
ø12	6	-	-	29.5	17	18	2.3	12	M4x12	15.5	16	25	6.3	3.5	8.5	43.5	22	58	46	48.5	27	63	51	10.5	3.5	8.5	54	22	58	46	59	27	63	51
ø16	6	-	-	33.5	19	18	2.3	12	M4x12	20	16	29	6.3	3.5	8.5	43.5	22	58	46	48.5	27	63	51	12	3.5	8.5	55.5	22	58	46	60.5	27	63	51
ø20	7	-	-	42	24	24	3.2	16	M6x16	25.5	24	36	9.2	4.5	11.5	53	24.5	72.5	56.5	63	34.5	82.5	66.5	14	4.5	11.5	67	24.5	72.5	56.5	77	34.5	82.5	66.5
ø25	7	-	-	46	26	24	3.2	16	M6x16	28	28	40	9.2	5	11	56.5	27.5	75.5	59.5	66.5	37.5	85.5	69.5	17.5	5	11	74	27.5	75.5	59.5	84	37.5	85.5	69.5
ø32	7	-	-	53.5	31	24	3.2	16	M6x16	34	34	45	9.2	7	9	64	33	81	65	74	43	91	75	23.5	5	11	85.5	33	81	65	95.5	43	91	75
ø40	7	28	20	71	40	29	4	19	M6x16	40	40	52	10	7	12	75.5	39.5	97.5	77.5	85.5	49.5	107.5	87.5	23.5	5	14	97	39.5	97.5	77.5	107	49.5	107.5	87.5
ø50	9	25	15	79	40	34	5	22	M8x20	50	46	64	13	8	14	82.5	40.5	108.5	84.5	92.5	50.5	118.5	94.5	28.5	5	17	108	40.5	108.5	84.5	118	50.5	118.5	94.5
ø63	11	40	21	96.5	51	40	5	25	M10x25	60	60	77	15	8	17	94	46	126	96	104	56	136	106	28.5	5	20	119.5	46	126	96	129.5	56	136	106
ø80	13	47	23	116.5	61.5	50	6	35	M12x40	77	77	98	18	10	25	113.5	53.5	153.5	123.5	123.5	63.5	163.5	133.5	35.5	8	27	147	53.5	153.5	123.5	157	63.5	163.5	133.5
ø100	13	50	22	134	69	50	6	35	M12x40	94	94	117	18	12	23	125	63	163	133	135	73	173	143	35.5	8	27	156.5	63	163	133	166.5	73	173	143

*1: For the long stroke, dimensions are as below.

Code / Bore size (mm)		Female thread								Male thread							
		No switch				With switch				No switch				With switch *2			
		A	B	LL	LX	A	B	LL	LX	A	B	LL	LX	A	B	LL	LX
ø20	Over 100 st	64.5	36	84	68	74.5	46	94	78	78.5	36	84	68	88.5	46	94	78
ø25	Over 150 st	70	41	89	73	80	51	99	83	87.5	41	89	73	97.5	51	99	83
ø32		71.5	40.5	88.5	72.5	81.5	50.5	98.5	82.5	93	40.5	88.5	72.5	103	50.5	98.5	82.5
ø40		85	49	107	87	95	59	117	97	106.5	49	107	87	116.5	59	117	97
ø50		96	54	122	98	106	64	132	108	121.5	54	122	98	131.5	64	132	108
ø63	Over 200 st	104	56	136	106	114	66	146	116	129.5	56	136	106	139.5	66	146	116
ø80		123.5	63.5	163.5	133.5	133.5	73.5	173.5	143.5	157	63.5	163.5	133.5	167	73.5	173.5	143.5
ø100		135	73	173	143	145	83	183	153	166.5	73	173	143	176.5	83	183	153

*2: When the stroke with switch is 5 mm, dimensions are as below.

Bore size	Female thread				Male thread			
	A	B	LL	LX	A	B	LL	LX
ø12	53.5	32	68	56	64	32	68	56
ø16	53.5	32	68	56	65.5	32	68	56

*3: LB cannot be selected when B + stroke is at or less than the stroke value below.
ø63: 69 or less
The same applies to variations not listed on this page.

Dimensions with accessories (Mounting bracket: LB2)

● ø12 to ø25

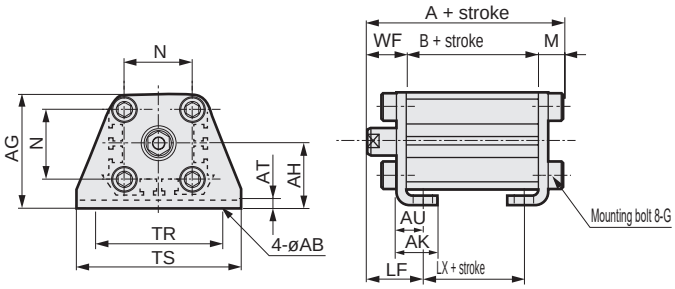

Rod end male thread

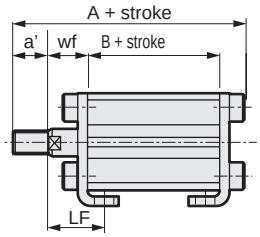

● ø32 to ø100

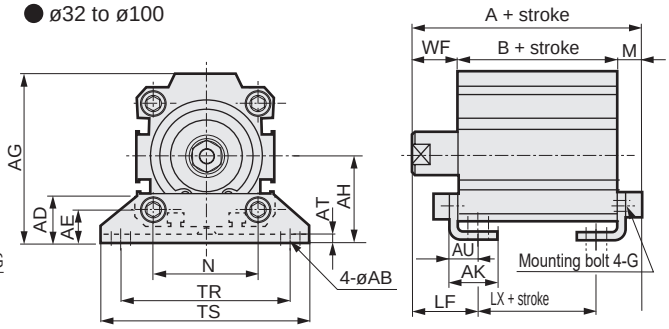

Rod end male thread

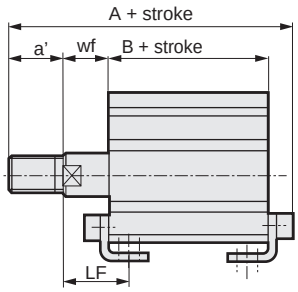

SSD (double acting/single rod), SSD-T (heat resistance), SSD-F (fine speed), SSD-0 (low speed) dimensions table

Code	Common dimensions													Female thread									Male thread								
Bore size (mm)	AB	AD	AE	AG	AH	AK	AT	AU	G	N	TR	TS	M	WF	LF	No switch			With switch *1			a'	wf	LF	No switch			With switch *1		
																A	B	LX	A	B	LX				A	B	LX	A	B	LX
ø12	5	-	-	29.5	17	12.5	2	8	M4x10	15.5	34	44	6	13.5	19.5	36.5	17	5	41.5	22	10	10.5	13.5	19.5	47	17	5	52	22	10
ø16	5	-	-	33.5	19	13	2	8	M4x10	20	38	48	6	13.5	19.5	36.5	17	5	41.5	22	10	12	13.5	19.5	48.5	17	5	53.5	22	10
ø20	7	-	-	42	24	15	3.2	9.2	M6x16	25.5	48	62	9.2	14.5	20.5	43.2	19.5	7.5	53.2	29.5	17.5	14	14.5	20.5	57.2	19.5	7.5	67.2	29.5	17.5
ø25	7	-	-	46	26	16.5	3.2	10.7	M6x16	28	52	66	9.2	15	22.5	46.7	22.5	7.5	56.7	32.5	17.5	17.5	15	22.5	64.2	22.5	7.5	74.2	32.5	17.5
ø32	7	18.5	13	57	30	17	3.2	11.2	M6x16	34	57	71	9.2	17	25	49.2	23	7	59.2	33	17	23.5	15	23	70.7	23	7	80.7	33	17
ø40	7	18	13	64	33	18.2	3.2	11.2	M6x16	40	64	78	9.2	17	25	55.7	29.5	13.5	65.7	39.5	23.5	23.5	15	23	77.2	29.5	13.5	87.2	39.5	23.5
ø50	9	22	14	78	39	22.7	3.2	14.7	M8x20	50	79	95	11.2	18	29.5	59.7	30.5	7.5	69.7	40.5	17.5	28.5	15	26.5	85.2	30.5	7.5	95.2	40.5	17.5
ø63	11	26	16	91.5	46	25.2	3.2	16.2	M10x25	60	95	113	13.2	18	31	67.2	36	10	77.2	46	20	28.5	15	28	92.7	36	10	102.7	46	20
ø80	13	31.5	20.5	114	59	30.5	4.5	19.5	M12x40	77	118	140	16.5	20	35	80	43.5	13.5	90	53.5	23.5	35.5	18	33	113.5	43.5	13.5	123.5	53.5	23.5
ø100	13	35	24	136	71	35.5	6	23	M12x40	94	137	162	18	22	39	93	53	19	103	63	29	35.5	18	35	124.5	53	19	134.5	63	29

*2: LB2 cannot be selected when B + stroke is at or less than the value below.
ø20: 27 or less; ø63: 45 or less; ø80: 72 or less; ø100: 69 or less
The same applies to variations not listed on this page.

*1: When the stroke with switch is 5 mm, dimensions are as below.

Bore size	Female thread			Male thread		
	A	B	LX	A	B	LX
ø12	46.5	27	15	57	27	15
ø16	46.5	27	15	58.5	27	15

SSD-K (double acting/high load), SSD-K-*C (rubber-air cushioned), SSD-KF (high load/fine speed), SSD-KU (low friction) dimensions table

Code	Common dimensions													For female thread *1									For male thread *1								
Bore size (mm)	AB	AD	AE	AG	AH	AK	AT	AU	G	N	TR	TS	M	WF	LF	No switch			With switch *2			a'	wf	LF	No switch			With switch *2		
																A	B	LX	A	B	LX				A	B	LX	A	B	LX
ø12	5	-	-	29.5	17	12.5	2	8	M4x10	15.5	34	44	6	13.5	19.5	41.5	22	10	46.5	27	15	10.5	13.5	19.5	52	22	10	57	27	15
ø16	5	-	-	33.5	19	13	2	8	M4x10	20	38	48	6	13.5	19.5	41.5	22	10	46.5	27	15	12	13.5	19.5	53.5	22	10	58.5	27	15
ø20	7	-	-	42	24	15	3.2	9.2	M6x16	25.5	48	62	9.2	14.5	20.5	48.2	24.5	12.5	58.2	34.5	22.5	14	14.5	20.5	62.2	24.5	12.5	72.2	34.5	22.5
ø25	7	-	-	46	26	16.5	3.2	10.7	M6x16	28	52	66	9.2	15	22.5	51.7	27.5	12.5	61.7	37.5	22.5	17.5	15	22.5	69.2	27.5	12.5	79.2	37.5	22.5
ø32	7	18.5	13	57	30	17	3.2	11.2	M6x16	34	57	71	9.2	17	25	59.2	33	17	69.2	43	27	23.5	15	23	80.7	33	17	90.7	43	27
ø40	7	18	13	64	33	18.2	3.2	11.2	M6x16	40	64	78	9.2	17	25	65.7	39.5	23.5	75.7	49.5	33.5	23.5	15	23	87.2	39.5	23.5	97.2	49.5	33.5
ø50	9	22	14	78	39	22.7	3.2	14.7	M8x20	50	79	95	11.2	18	29.5	69.7	40.5	17.5	79.7	50.5	27.5	28.5	15	26.5	95.2	40.5	17.5	105.2	50.5	27.5
ø63	11	28	16	91.5	46	25.2	3.2	16.2	M10x25	60	95	113	13.2	18	31	77.2	46	20	87.2	56	30	28.5	15	28	102.7	46	20	112.7	56	30
ø80	13	39.5	20.5	114	59	30.5	4.5	19.5	M12x40	77	118	140	16.5	20	35	90	53.5	23.5	100	63.5	33.5	35.5	18	33	123.5	53.5	23.5	133.5	63.5	33.5
ø100	13	50	24	136	71	35.5	6	23	M12x40	94	137	162	18	22	39	103	63	29	113	73	39	35.5	18	35	134.5	63	29	144.5	73	39

*1: For the long stroke, dimensions are as below.

Code		Female thread						Male thread					
		No switch			With switch			No switch			With switch		
Bore size (mm)		A	B	LX	A	B	LX	A	B	LX	A	B	LX
ø20	Over 100 st	59.7	36	24	69.7	46	34	73.7	36	24	83.7	46	34
ø25	Over 150 st	65.2	41	26	75.2	51	36	82.7	41	26	92.7	51	36
ø32		66.7	40.5	24.5	76.7	50.5	34.5	88.2	40.5	24.5	98.2	50.5	34.5
ø40		75.2	49	33	85.2	59	43	96.7	49	33	106.7	59	43
ø50		83.2	54	31	93.2	64	41	108.7	54	31	118.7	64	41
ø63	Over 200 st	87.2	56	30	97.2	66	40	112.7	56	30	122.7	66	40
ø80		100	63.5	33.5	110	73.5	43.5	133.5	63.5	33.5	143.5	73.5	43.5
ø100		113	73	39	123	83	49	144.5	73	39	154.5	83	49

*2: When the stroke with switch is 5 mm, dimensions are as below.

Bore size	Female thread			Male thread		
	A	B	LX	A	B	LX
ø12	51.5	32	20	62	32	20
ø16	51.5	32	20	63.5	32	20

*3: LB2 cannot be selected when B + stroke is at or less than the value below.
ø80: 72 or less
The same applies to variations not listed on this page.

Note: The WF/wf dimension of the cylinder for LB2 is set 10 mm longer than that of standard products. Contact CKD for the cylinder model No. when ordering individual cylinders and LB2 brackets.

Dimensions with accessories (Mounting bracket: FA)

● ø12 to ø25

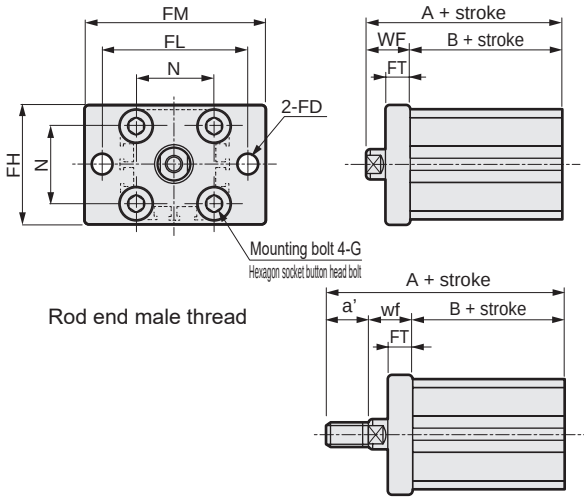

● ø32 to ø100

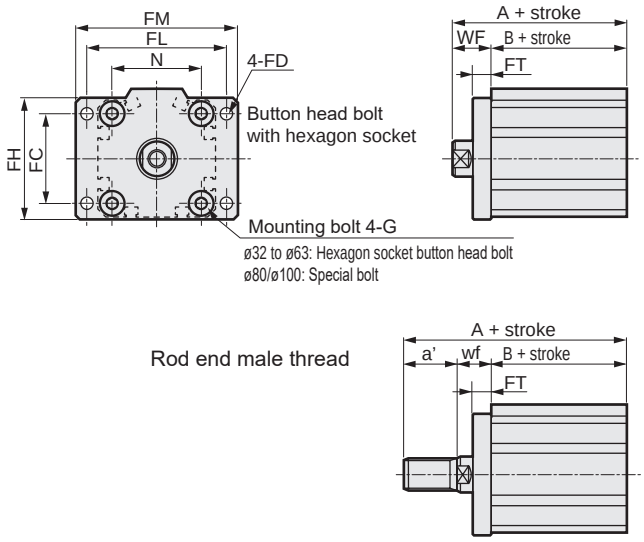

SSD (double acting/single rod), SSD-T (heat resistance), SSD-F (fine speed), SSD-0 (low speed) dimensions table

Code / Bore size (mm)	Common dimensions								Female thread					Male thread					
	FC	FD	FH	FL	FM	FT	N	G	WF	No switch		With switch *1		a'	wf	No switch		With switch *1	
										A	B	A	B			A	B	A	B
ø12	-	4.5	25	45	55	5.5	15.5	M4x12	13.5	30.5	17	35.5	22	10.5	13.5	41	17	46	22
ø16	-	4.5	30	45	55	5.5	20	M4x12	13.5	30.5	17	35.5	22	12	13.5	42.5	17	47.5	22
ø20	-	6.6	39	48	60	8	25.5	M6x16	14.5	34	19.5	44	29.5	14	14.5	48	19.5	58	29.5
ø25	-	6.6	42	52	64	8	28	M6x16	15	37.5	22.5	47.5	32.5	17.5	15	55	22.5	65	32.5
ø32	34	5.5	48	56	65	8	34	M6x16	17	40	23	50	33	23.5	15	61.5	23	71.5	33
ø40	40	5.5	54	62	72	8	40	M6x16	17	46.5	29.5	56.5	39.5	23.5	15	68	29.5	78	39.5
ø50	50	6.6	67	76	89	9	50	M8x20	18	48.5	30.5	58.5	40.5	28.5	15	74	30.5	84	40.5
ø63	60	9	80	92	108	9	60	M10x25	18	54	36	64	46	28.5	15	79.5	36	89.5	46
ø80	77	11	99	116	134	11	77	M12x40	20	63.5	43.5	73.5	53.5	35.5	18	97	43.5	107	53.5
ø100	94	11	117	136	154	11	94	M12x40	22	75	53	85	63	35.5	18	106.5	53	116.5	63

*1: When the stroke with switch is 5 mm, dimensions are as below.

Bore size	Female thread		Male thread	
	A	B	A	B
ø12	40.5	27	51	27
ø16	40.5	27	52.5	27

SSD-K (double acting/high load), SSD-K-*C (rubber-air cushioned), SSD-KF (high load/fine speed), SSD-KU (low friction) dimensions table

Code / Bore size (mm)	Common dimensions								For female thread *1					For male thread *1					
	FC	FD	FH	FL	FM	FT	N	G	WF	No switch		With switch *2		a'	wf	No switch		With switch *2	
										A	B	A	B			A	B	A	B
ø12	-	4.5	25	45	55	5.5	15.5	M4x12	13.5	35.5	22	40.5	27	10.5	13.5	46	22	51	27
ø16	-	4.5	30	45	55	5.5	20	M4x12	13.5	35.5	22	40.5	27	12	13.5	47.5	22	52.5	27
ø20	-	6.6	39	48	60	8	25.5	M6x16	14.5	39	24.5	49	34.5	14	14.5	53	24.5	63	34.5
ø25	-	6.6	42	52	64	8	28	M6x16	15	42.5	27.5	52.5	37.5	17.5	15	60	27.5	70	37.5
ø32	34	5.5	48	56	65	8	34	M6x16	17	50	33	60	43	23.5	15	71.5	33	81.5	43
ø40	40	5.5	54	62	72	8	40	M6x16	17	56.5	39.5	66.5	49.5	23.5	15	78	39.5	88	49.5
ø50	50	6.6	67	76	89	9	50	M8x20	18	58.5	40.5	68.5	50.5	28.5	15	84	40.5	94	50.5
ø63	60	9	80	92	108	9	60	M10x25	18	64	46	74	56	28.5	15	89.5	46	99.5	56
ø80	77	11	99	116	134	11	77	M12x40	20	73.5	53.5	83.5	63.5	35.5	18	107	53.5	117	63.5
ø100	94	11	117	136	154	11	94	M12x40	22	85	63	95	73	35.5	18	116.5	63	126.5	73

*1: For the long stroke, dimensions are as below.

Code / Bore size (mm)		Female thread				Male thread			
		No switch		With switch		No switch		With switch	
		A	B	A	B	A	B	A	B
ø20	Over 100 st	50.5	36	60.5	46	64.5	36	74.5	46
ø25	Over 150 st	56	41	66	51	73.5	41	83.5	51
ø32		57.5	40.5	67.5	50.5	79	40.5	89	50.5
ø40		66	49	76	59	87.5	49	97.5	59
ø50		72	54	82	64	97.5	54	107.5	64
ø63	Over 200 st	74	56	84	66	99.5	56	109.5	66
ø80		83.5	63.5	93.5	73.5	117	63.5	127	73.5
ø100		95	73	105	83	126.5	73	136.5	83

*2: When the stroke with switch is 5 mm, dimensions are as below.

Bore size	Female thread		Male thread	
	A	B	A	B
ø12	45.5	32	56	32
ø16	45.5	32	57.5	32

Note: The WF/wf dimension of the cylinder for FA is set 10 mm longer than that of standard products. Contact CKD for the cylinder model No. when ordering individual cylinders and FA brackets.

Dimensions with accessories (Mounting bracket: FB)

● ø12 to ø25

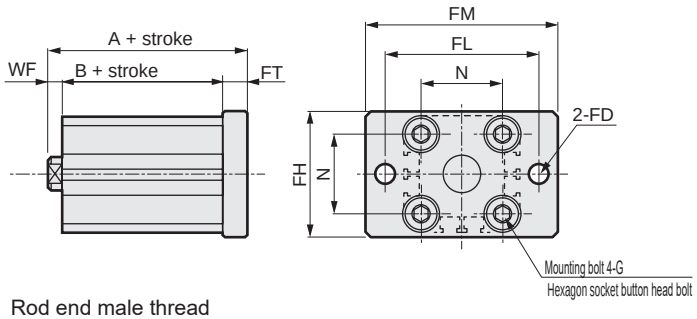

Rod end male thread

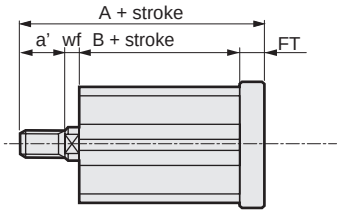

● ø32 to ø100

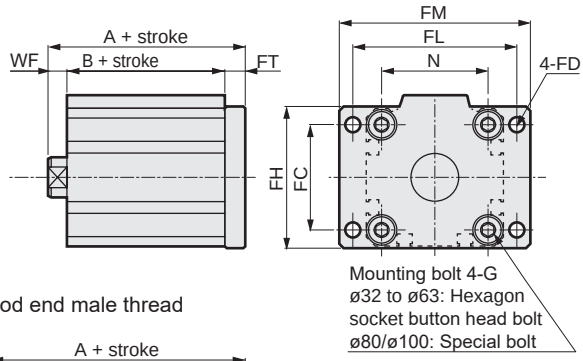

Rod end male thread

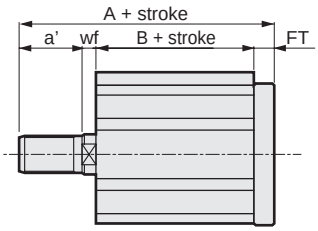

SSD (double acting/single rod), SSD-T (heat resistance), SSD-F (fine speed), SSD-0 (low speed) dimensions table

Code / Bore size (mm)	Common dimensions								Female thread					Male thread					
	FC	FD	FH	FL	FM	FT	N	G	WF	No switch		With switch *1		a'	wf	No switch		With switch *1	
										A	B	A	B			A	B	A	B
ø12	-	4.5	25	45	55	5.5	15.5	M4x12	3.5	26	17	31	22	10.5	3.5	36.5	17	41.5	22
ø16	-	4.5	30	45	55	5.5	20	M4x12	3.5	26	17	31	22	12	3.5	38	17	43	22
ø20	-	6.6	39	48	60	8	25.5	M6x16	4.5	32	19.5	42	29.5	14	4.5	46	19.5	56	29.5
ø25	-	6.6	42	52	64	8	28	M6x16	5	35.5	22.5	45.5	32.5	17.5	5	53	22.5	63	32.5
ø32	34	5.5	48	56	65	8	34	M6x16	7	38	23	48	33	23.5	5	59.5	23	69.5	33
ø40	40	5.5	54	62	72	8	40	M6x16	7	44.5	29.5	54.5	39.5	23.5	5	66	29.5	76	39.5
ø50	50	6.6	67	76	89	9	50	M8x20	8	47.5	30.5	57.5	40.5	28.5	5	73	30.5	83	40.5
ø63	60	9	80	92	108	9	60	M10x25	8	53	36	63	46	28.5	5	78.5	36	88.5	46
ø80	77	11	99	116	134	11	77	M12x40	10	64.5	43.5	74.5	53.5	35.5	8	98	43.5	108	53.5
ø100	94	11	117	136	154	11	94	M12x40	12	76	53	86	63	35.5	8	107.5	53	117.5	63

*1: When the stroke with switch is 5 mm, dimensions are as below.

Bore size	Female thread		Male thread	
	A	B	A	B
ø12	36	27	46.5	27
ø16	36	27	48	27

SSD-K (double acting/high load), SSD-K-*C (rubber-air cushioned), SSD-KF (high load/fine speed), SSD-KU (low friction) dimensions table

Code / Bore size (mm)	Common dimensions								For female thread *1					For male thread *1					
	FC	FD	FH	FL	FM	FT	N	G	WF	No switch		With switch *2		a'	wf	No switch		With switch *2	
										A	B	A	B			A	B	A	B
ø12	-	4.5	25	45	55	5.5	15.5	M4x12	3.5	31	22	36	27	10.5	3.5	41.5	22	46.5	27
ø16	-	4.5	30	45	55	5.5	20	M4x12	3.5	31	22	36	27	12	3.5	43	22	48	27
ø20	-	6.6	39	48	60	8	25.5	M6x16	4.5	37	24.5	47	34.5	14	4.5	51	24.5	61	34.5
ø25	-	6.6	42	52	64	8	28	M6x16	5	40.5	27.5	50.5	37.5	17.5	5	58	27.5	68	37.5
ø32	34	5.5	48	56	65	8	34	M6x16	7	48	33	58	43	23.5	5	69.5	33	79.5	43
ø40	40	5.5	54	62	72	8	40	M6x16	7	54.5	39.5	64.5	49.5	23.5	5	76	39.5	86	49.5
ø50	50	6.6	67	76	89	9	50	M8x20	8	57.5	40.5	67.5	50.5	28.5	5	83	40.5	93	50.5
ø63	60	9	80	92	108	9	60	M10x25	8	63	46	73	56	28.5	5	88.5	46	98.5	56
ø80	77	11	99	116	134	11	77	M12x40	10	74.5	53.5	84.5	63.5	35.5	8	108	53.5	118	63.5
ø100	94	11	117	136	154	11	94	M12x40	12	86	63	96	73	35.5	8	117.5	63	127.5	73

*1: For the long stroke, dimensions are as below.

Code / Bore size (mm)		Female thread				Male thread			
		No switch		With switch		No switch		With switch	
		A	B	A	B	A	B	A	B
ø20	Over 100 st	48.5	36	58.5	46	62.5	36	72.5	46
ø25	Over 150 st	54	41	64	51	71.5	41	81.5	51
ø32		55.5	40.5	65.5	50.5	77	40.5	87	50.5
ø40		64	49	74	59	85.5	49	95.5	59
ø50		71	54	81	64	96.5	54	106.5	64
ø63	Over 200 st	73	56	83	66	98.5	56	108.5	66
ø80		84.5	63.5	94.5	73.5	118	63.5	128	73.5
ø100		96	73	106	83	127.5	73	137.5	83

*2: When the stroke with switch is 5 mm, dimensions are as below.

Bore size	Female thread		Male thread	
	A	B	A	B
ø12	41	32	51.5	32
ø16	41	32	53	32

Dimensions with accessories (Mounting bracket: CB)

CAD

● ø12 to ø25

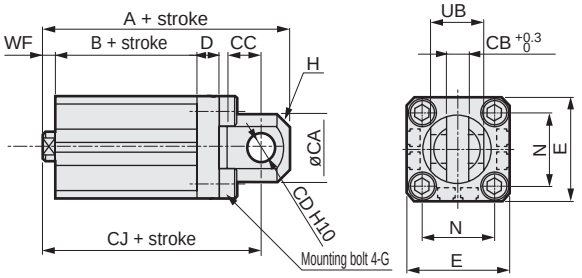

Rod end male thread

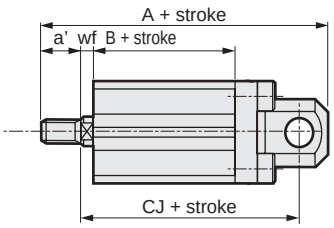

● ø32 to ø100

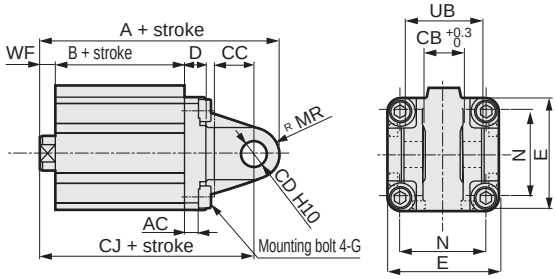

Rod end male thread

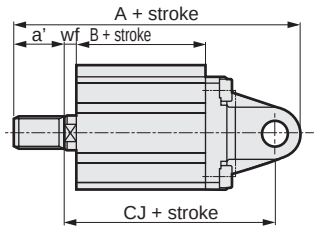

SSD (double acting/single rod), SSD-T (heat resistance), SSD-F (fine speed), SSD-0 (low speed) dimensions table

Code / Bore size (mm)	Common dimensions												Female thread							Male thread						
	AC	CA	CB	CC	CD	D	E	G	H	MR	N	UB	WF	No switch			With switch *1			a'	wf	No switch			With switch *1		
														A	B	CJ	A	B	CJ			A	B	CJ	A	B	CJ
ø12	-	13.5	6.6	7	5	5	25	M4x12	C1.5	-	15.5	12 -0.1 -0.4	3.5	40.5	17	34.5	45.5	22	39.5	10.5	3.5	51	17	34.5	56	22	39.5
ø16	-	15	6.6	8	5	5	29	M4x12	C2	-	20	12 -0.1 -0.4	3.5	41.5	17	35.5	46.5	22	40.5	12	3.5	53.5	17	35.5	58.5	22	40.5
ø20	-	24	8.1	12	10	8	36	M6x20	C4	-	25.5	19 -0.1 -0.4	4.5	57	19.5	47	67	29.5	57	14	4.5	71	19.5	47	81	29.5	57
ø25	-	27.5	10.1	16	12	8	40	M6x20	C5	-	28	21 -0.1 -0.4	5	66.5	22.5	54.5	76.5	32.5	64.5	17.5	5	84	22.5	54.5	94	32.5	64.5
ø32	9.5	-	10.1	16	12	10	45	M6x20	-	12	34	21 -0.1 -0.4	7	72	23	60	82	33	70	23.5	5	93.5	23	58	103.5	33	68
ø40	6.5	-	18.1	18	12	10	52	M6x20	-	12	40	36 -0.1 -0.4	7	80.5	29.5	68.5	90.5	39.5	78.5	23.5	5	102	29.5	66.5	112	39.5	76.5
ø50	6.5	-	18.1	18	12	10	64	M8x20	-	12	50	36 -0.1 -0.4	8	82.5	30.5	70.5	92.5	40.5	80.5	28.5	5	108	30.5	67.5	118	40.5	77.5
ø63	7.5	-	20.1	24	14	10	77	M10x25	-	16	60	40 -0.1 -0.4	8	97	36	81	107	46	91	28.5	5	122.5	36	78	132.5	46	88
ø80	10.5	-	28.1	30	20	14	98	M12x40	-	20	77	56 -0.1 -0.4	10	125.5	43.5	105.5	135.5	53.5	115.5	35.5	8	159	43.5	103.5	169	53.5	113.5
ø100	10.5	-	28.1	30	20	16	118	M12x40	-	20	94	56 -0.1 -0.4	12	137	53	117	147	63	127	35.5	8	168.5	53	113	178.5	63	123

*1: When the stroke with switch is 5 mm, dimensions are as below.

Bore size	Female thread			Male thread		
	A	B	CJ	A	B	CJ
ø12	50.5	27	44.5	61	27	44.5
ø16	51.5	27	45.5	63.5	27	45.5

SSD-K (double acting/high load), SSD-K-*C (rubber-air cushioned), SSD-KF (high load/fine speed), SSD-KU (low friction) dimensions table

Code / Bore size (mm)	Common dimensions												Female thread *1							Male thread *1						
	AC	CA	CB	CC	CD	D	E	G	H	MR	N	UB	WF	No switch			With switch *2			a'	wf	No switch			With switch *2		
														A	B	CJ	A	B	CJ			A	B	CJ	A	B	CJ
ø12	-	13.5	6.5 +0.4 +0.1	7	5	5	25	M4x12	C1.5	-	15.5	12 -0.1 -0.4	3.5	45.5	22	39.5	50.5	27	44.5	10.5	3.5	56	22	39.5	61	27	44.5
ø16	-	15	6.5 +0.4 +0.1	8	5	5	29	M4x12	C2	-	20	12 -0.1 -0.4	3.5	46.5	22	40.5	51.5	27	45.5	12	3.5	58.5	22	40.5	63.5	27	45.5
ø20	-	24	8 +0.4 +0.1	12	10	8	36	M6x20	C4	-	25.5	19 -0.1 -0.4	4.5	62	24.5	52	72	34.5	62	14	4.5	76	24.5	52	86	34.5	62
ø25	-	27.5	10 +0.4 +0.1	16	12	8	40	M6x20	C5	-	28	21 -0.1 -0.4	5	71.5	27.5	59.5	81.5	37.5	69.5	17.5	5	89	27.5	59.5	99	37.5	69.5
ø32	9.5	-	10 +0.4 +0.1	16	12	10	45	M6x20	-	12	34	21 -0.1 -0.4	7	82	33	70	92	43	80	23.5	5	103.5	33	68	13.5	43	78
ø40	6.5	-	18 +0.4 +0.1	18	12	10	52	M6x20	-	12	40	36 -0.1 -0.4	7	90.5	39.5	78.5	100.5	49.5	88.5	23.5	5	112	39.5	76.5	122	49.5	86.5
ø50	6.5	-	18 +0.4 +0.1	18	12	10	64	M8x20	-	12	50	36 -0.1 -0.4	8	92.5	40.5	80.5	102.5	50.5	90.5	28.5	5	118	40.5	77.5	128	50.5	87.5
ø63	7.5	-	20 +0.4 +0.1	24	14	10	77	M10x25	-	16	60	40 -0.1 -0.4	8	107	46	91	117	56	101	28.5	5	132.5	46	88	142.5	56	98
ø80	10.5	-	28 +0.4 +0.1	30	20	14	98	M12x40	-	20	77	56 -0.1 -0.4	10	135.5	53.5	115.5	145.5	63.5	125.5	35.5	8	169	53.5	113.5	179	63.5	123.5
ø100	10.5	-	28 +0.4 +0.1	30	20	16	118	M12x40	-	20	94	56 -0.1 -0.4	12	147	63	127	157	73	137	35.5	8	178.5	63	123	188.5	73	133

*1: For the long stroke, dimensions are as below.

Code / Bore size (mm)		Female thread						Male thread					
		No switch			With switch *2			No switch			With switch *2		
		A	B	CJ	A	B	CJ	A	B	CJ	A	B	CJ
ø20	Over 100 st	80	36	63.5	83.5	46	73.5	87.5	36	63.5	97.5	46	73.5
ø25	Over 150 st	90	41	73	95	51	83	102.5	41	73	112.5	51	83
ø32		91.5	40.5	77.5	99.5	50.5	87.5	111	40.5	75.5	121	50.5	85.5
ø40		101	49	88	110	59	98	121.5	49	86	131.5	59	96
ø50		115	54	94	116	64	104	131.5	54	91	141.5	64	101
ø63	Over 200 st	138	56	101	127	66	111	142.5	56	98	152.5	66	108
ø80		147.5	63.5	125.5	155.5	73.5	135.5	179	63.5	123.5	189	73.5	133.5
ø100		73	73	137	167	83	147	188.5	73	133	198.5	83	143

*2: When the stroke with switch is 5 mm, dimensions are as below.

Bore size	Female thread			Male thread		
	A	B	CJ	A	B	CJ
ø12	55.5	32	49.5	66	32	49.5
ø16	56.5	32	50.5	68.5	32	50.5

* A pin and a snap ring are included.

Accessory Dimensions (Mounting bracket: CAD 2)

● ø12 to ø25

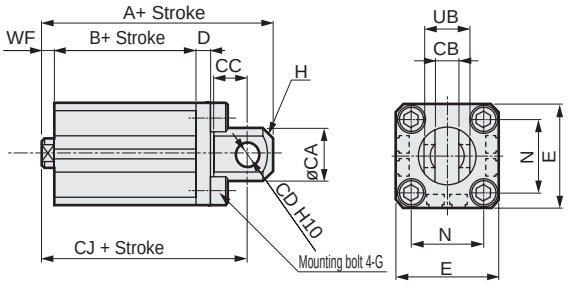

● ø32 to ø100

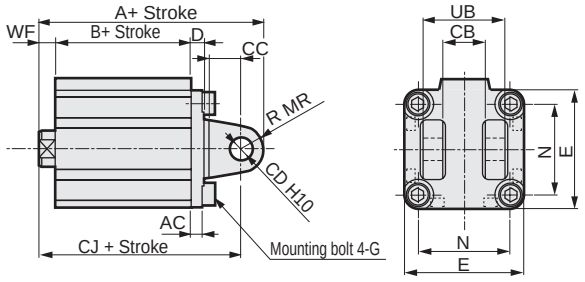

Rod end male thread

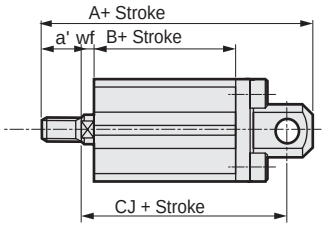

Rod end male thread

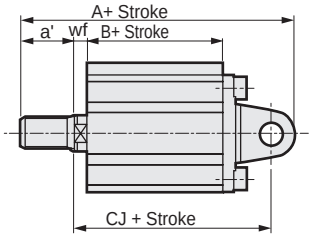

SSD (double acting/single rod), SSD-T (heat resistance), SSD-F (fine speed), SSD-0 (low speed) dimensions table

Code / Bore size(mm)	Common dimensions												Female thread							Male thread						
	AC	CA	CB	CC	CD	D	E	G	H	MR	N	UB	WF	No switch			With switch *1			a'	wf	No switch			With switch *1		
														A	B	CJ	A	B	CJ			A	B	CJ	A	B	CJ
ø12	-	12	$5.2^{+0.2\,0}$	7	5	4	25	M 4 x 12	C1.5	-	15.5	$10^{-0.1}_{-0.3}$	3.5	40.5	17	34.5	45.5	22	39.5	10.5	3.5	51	17	34.5	56	22	39.5
ø16	-	15	$6.6^{+0.3\,0}$	8	5	5	29	M 4 x 12	C2	-	20	$12^{-0.1}_{-0.4}$	3.5	41.5	17	35.5	46.5	22	40.5	12	3.5	53.5	17	35.5	58.5	22	40.5
ø20	-	20	$8.2^{+0.2\,0}$	12	8	5	36	M 6 x 16	C4	-	25.5	$16^{-0.1}_{-0.3}$	4.5	51	19.5	42	61	29.5	52	14	4.5	65	19.5	42	75	29.5	52
ø25	-	24	$10.2^{+0.2\,0}$	14	10	5	40	M 6 x 16	C5	-	28	$20^{-0.1}_{-0.3}$	5	57.5	22.5	47.5	67.5	32.5	57.5	17.5	5	75	22.5	47.5	85	32.5	57.5
ø32	4.5	-	$18.2^{+0.2\,0}$	14	10	5	45	M 6 x 16	-	10	34	$36^{-0.1}_{-0.3}$	7	60	23	50	70	33	60	23.5	5	81.5	23	48	91.5	33	58
ø40	5	-	$18.2^{+0.2\,0}$	14	10	6	52	M 6 x 16	-	10	40	$36^{-0.1}_{-0.3}$	7	68.5	29.5	58.5	78.5	39.5	68.5	23.5	5	90	29.5	56.5	100	39.5	66.5
ø50	6	-	$22.2^{+0.2\,0}$	20	14	7	64	M 8 x 20	-	14	50	$44^{-0.1}_{-0.3}$	8	80.5	30.5	66.5	90.5	40.5	76.5	28.5	5	106	30.5	63.5	116	40.5	73.5
ø63	7	-	$22.2^{+0.2\,0}$	20	14	8	77	M 10 x 25	-	14	60	$44^{-0.1}_{-0.3}$	8	88	36	74	98	46	84	28.5	5	113.5	36	71	123.5	46	81
ø80	9	-	$28.2^{+0.2\,0}$	27	18	10	98	M 12 x 40	-	18	77	$56^{-0.1}_{-0.3}$	10	109.5	43.5	91.5	119.5	53.5	101.5	35.5	8	143	43.5	89.5	153	53.5	99.5
ø100	12	-	$32.2^{+0.2\,0}$	31	22	13	117	M 12 x 40	-	22	94	$64^{-0.1}_{-0.3}$	12	132	53	110	142	63	120	35.5	8	163.5	53	106	173.5	63	116

*1: When the stroke with switch is 5 mm, dimensions are as below.

Bore size	Female thread			Male thread		
	A	B	CJ	A	B	CJ
ø12	50.5	27	44.5	61	27	44.5
ø16	51.5	27	45.5	63.5	27	45.5

SSD-K (double acting/high load), SSD-K-*C (rubber-air cushioned), SSD-KF (high load/fine speed), SSD-KU (low friction) dimensions table

Code / Bore size(mm)	Common dimensions												For female thread *1							For male thread *1						
	AC	CA	CB	CC	CD	D	E	G	H	MR	N	UB	WF	No switch			With switch *2			a'	wf	No switch			With switch *2		
														A	B	CJ	A	B	CJ			A	B	CJ	A	B	CJ
ø12	-	12	$5.2^{+0.2\,0}$	7	5	4	25	M 4 x 12	C1.5	-	15.5	$10^{-0.1}_{-0.3}$	3.5	45.5	22	39.5	50.5	27	44.5	10.5	3.5	56	22	39.5	61	27	44.5
ø16	-	15	$6.6^{+0.3\,0}$	8	5	5	29	M 4 x 12	C2	-	20	$12^{-0.1}_{-0.4}$	3.5	46.5	22	40.5	51.5	27	45.5	12	3.5	58.5	22	40.5	63.5	27	45.5
ø20	-	20	$8.2^{+0.2\,0}$	12	8	5	36	M 6 x 16	C4	-	25.5	$16^{-0.1}_{-0.3}$	4.5	56	24.5	47	66	34.5	57	14	4.5	70	24.5	47	80	34.5	57
ø25	-	24	$10.2^{+0.2\,0}$	14	10	5	40	M 6 x 16	C5	-	28	$20^{-0.1}_{-0.3}$	5	62.5	27.5	52.5	72.5	37.5	62.5	17.5	5	80	27.5	52.5	90	37.5	62.5
ø32	4.5	-	$18.2^{+0.2\,0}$	14	10	5	45	M 6 x 16	-	10	34	$36^{-0.1}_{-0.3}$	7	70	33	60	80	43	70	23.5	5	91.5	33	58	101.5	43	68
ø40	5	-	$18.2^{+0.2\,0}$	14	10	6	52	M 6 x 16	-	10	40	$36^{-0.1}_{-0.3}$	7	78.5	39.5	68.5	88.5	49.5	78.5	23.5	5	100	39.5	66.5	110	49.5	76.5
ø50	6	-	$22.2^{+0.2\,0}$	20	14	7	64	M 8 x 20	-	14	50	$44^{-0.1}_{-0.3}$	8	90.5	40.5	76.5	100.5	50.5	86.5	28.5	5	116	40.5	73.5	126	50.5	83.5
ø63	7	-	$22.2^{+0.2\,0}$	20	14	8	77	M 10 x 25	-	14	60	$44^{-0.1}_{-0.3}$	8	98	46	84	108	56	94	28.5	5	123.5	46	81	133.5	56	91
ø80	9	-	$28.2^{+0.2\,0}$	27	18	10	98	M 12 x 40	-	18	77	$56^{-0.1}_{-0.3}$	10	119.5	53.5	101.5	129.5	63.5	111.5	35.5	8	153	53.5	99.5	163	63.5	109.5
ø100	12	-	$32.2^{+0.2\,0}$	31	22	13	117	M 12 x 40	-	22	94	$64^{-0.1}_{-0.3}$	12	142	63	120	152	73	130	35.5	8	173.5	63	116	183.5	73	126

*1: For the long stroke, dimensions are as below.

Code / Bore size (mm)		Female thread						Male thread					
		No switch			With switch *2			No switch			With switch *2		
		A	B	CJ	A	B	CJ	A	B	CJ	A	B	CJ
ø20	Over 100 st	71	36	58.5	77.5	46	68.5	81.5	36	58.5	91.5	46	68.5
ø25	Over 150 st	78	41	66	86	51	76	93.5	41	66	103.5	51	76
ø32		79.5	40.5	67.5	87.5	50.5	77.5	99	40.5	65.5	109	50.5	75.5
ø40		99	49	78	98	59	88	109.5	49	76	119.5	59	86
ø50		106	54	90	114	64	100	129.5	54	87	139.5	64	97
ø63	Over 200 st	122	56	94	118	66	104	133.5	56	91	143.5	66	101
ø80		142.5	63.5	111.5	139.5	73.5	121.5	163	63.5	109.5	173	73.5	119.5
ø100		73	73	130	162	83	140	183.5	73	126	193.5	83	136

*2: When the stroke with switch is 5 mm, dimensions are as below.

Bore size	Female thread			Male thread		
	A	B	CJ	A	B	CJ
ø12	55.5	32	49.5	66	32	49.5
ø16	56.5	32	50.5	68.5	32	50.5

* A pin and a snap ring are attached.

SCP*3
CMK2
CMA2
SCM
SCG
SCA2
SCS2
CKV2
CAV2/ COVP/N2
SSD2
SSG
SSD
CAT
MDC2
MVC
SMG
MSD/ MSDG
FC*
STK
SRL3
SRG3
SRM3
SRT3
MRL2
MRG2
SM-25
ShkAbs
FJ
FK
Spd Contr
Ending

How to order mounting bolts

SSD - BOLT - dxL

Mounting bolts (Bolts are available in units of 4 bolts per set.)

How to read the list

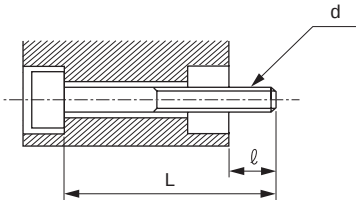

Material: Steel
Treatment: Black finish

d : Mounting bolt screw diameter
L : Mounting bolt length
ℓ : Mating side screw-in available length
(Note) The mounting bolts will be displayed as d x L.

For SSD- ☐

Model No.	ℓ	dxL
SSD-12- 5	6.5	M3x25
10		x30
15		x35
20		x40
25		x45
30		x50
SSD-16- 5		M3x25
10		x30
15		x35
20		x40
25		x45
30		x50
SSD-20- 5	6	M5x25
10		x30
15		x35
20		x40
25		x45
30		x50
SSD-25- 5	8	M5x30
10		x35
15		x40
20		x45
25		x50
30		x55
40		x65
50		x75
SSD-32- 5	7.5	M5x30
10		x35
15		x40
20		x45
25		x50
30		x55
40		x65
50		x75

Model No.	ℓ	dxL
SSD-40- 5	6	M5x 35
10		x 40
15		x 45
20		x 50
25		x 55
30		x 60
40		x 70
50		x 80
SSD-50- 5	11	M6x 40
10		x 45
15		x 50
20		x 55
25		x 60
30		x 65
40		x 75
50		x 85
SSD-63- 5	13	M8x 45
10		x 50
20		x 60
30		x 70
40		x 80
50		x 90
SSD-80- 5	17.5	M10x 55
10		x 60
20		x 70
30		x 80
40		x 90
50		x100

Model No.	ℓ	dxL
SSD-100- 5	18	M10x 65
10		x 70
20		x 80
30		x 90
40		x100
50		x110
SSD-125- 10	21	M12x 90
20		x100
30		x110
40		x120
50		x130
60		x140
70		x150
80		x160
90		x170
100		x180
SSD-140- 10	21	M12 x100
20		x110
30		x120
40		x130
50		x140
60		x150
70		x160
80		x170
90		x180
100		x190
SSD-160- 10	24.2	M14 x100
20		x110
30		x120
40		x130
50		x140
60		x150
70		x160
80		x170
90		x180
100		x190

For SSD-L-□

Model No.	ℓ	dxL
SSD-L-12- 5	6.5	M3x35
10		x35
15		x40
20		x45
25		x50
30		x55
SSD-L-16- 5		M3x35
10		x35
15		x40
20		x45
25		x50
30		x55
SSD-L-20- 5	6	M5x35
10		x40
15		x45
20		x50
25		x55
30		x60
SSD-L-25- 5	8	M5x40
10		x45
15		x50
20		x55
25		x60
30		x65
40		x75
50		x85
SSD-L-32- 5	7.5	M5x40
10		x45
15		x50
20		x55
25		x60
30		x65
40		x75
50		x85

Model No.	ℓ	dxL
SSD-L-40- 5	6	M5x 45
10		x 50
15		x 55
20		x 60
25		x 65
30		x 70
40		x 80
50		x 90
SSD-L-50- 5	11	M6x 50
10		x 55
15		x 60
20		x 65
25		x 70
30		x 75
40		x 85
50		x 95
SSD-L-63- 5	13	M8x 55
10		x 60
20		x 70
30		x 80
40		x 90
50		x100
SSD-L-80- 5	17.5	M10x 65
10		x 70
20		x 80
30		x 90
40		x100
50		x110

Model No.	ℓ	dxL
SSD-L-100- 5	18	M10x 75
10		x 80
20		x 90
30		x100
40		x110
50		x120
SSD-L-125- 10	21	M12x 90
20		x100
30		x110
40		x120
50		x130
60		x140
70		x150
80		x160
90		x170
100		x180
SSD-L-140- 10	21	M12 x100
20		x110
30		x120
40		x130
50		x140
60		x150
70		x160
80		x170
90		x180
100		x190
SSD-L-160- 10	24.2	M14 x100
20		x110
30		x120
40		x130
50		x140
60		x150
70		x160
80		x170
90		x180
100		x190

For SSD-$^{X}_{Y}$-□

Model No.	ℓ	dxL
SSD-$^{X}_{Y}$-12- 5	6.5	M3x25
10		x30
-16- 5		M3x25
10		x30
-20- 5	6	M5x25
10		x30

Model No.	ℓ	dxL
SSD-$^{X}_{Y}$-25- 5	8	M5x30
10		x35
-32- 5	7.5	M5x30
10		x35
-40-10	6	M5x40
20		x50

Model No.	ℓ	dxL
SSD-$^{X}_{Y}$-50-10	11	M6x45
20		x55

For SSD-$^{XL}_{YL}$-□

Model No.	ℓ	dxL
SSD-$^{XL}_{YL}$-12- 5	6.5	M3x35
10		x35
-16- 5		M3x35
10		x35
-20- 5	6	M5x35
10		x40

Model No.	ℓ	dxL
SSD-$^{XL}_{YL}$-25- 5	8	M5x40
10		x45
-32- 5	7.5	M5x40
10		x45
-40-10	6	M5x50
20		x60

Model No.	ℓ	dxL
SSD-$^{XL}_{YL}$-50-10	11	M6x55
20		x65

SCP*3
CMK2
CMA2
SCM
SCG
SCA2
SCS2
CKV2
CAV2/ COVP/N2
SSD2
SSG
SSD
CAT
MDC2
MVC
SMG
MSD/ MSDG
FC*
STK
SRL3
SRG3
SRM3
SRT3
MRL2
MRG2
SM-25
ShkAbs
FJ
FK
Spd Contr
Ending

For SSD-D-□

Model No.	ℓ	dxL
SSD-D-12- 5	6.5	M3x30
10		x35
15		x40
20		x45
25		x50
30		x55
SSD-D-16- 5		M3x30
10		x35
15		x40
20		x45
25		x50
30		x55
SSD-D-20- 5	9.5	M5x35
10		x40
15		x45
20		x50
25		x55
30		x60
SSD-D-25- 5		M5x40
10		x45
15		x50
20		x55
25		x60
30		x65
40		x75
50		x85
SSD-D-32- 5	10	M5x40
10		x45
15		x50
20		x55
25		x60
30		x65
40		x75
50		x85

Model No.	ℓ	dxL
SSD-D-40- 5	6.5	M5x 45
10		x 50
15		x 55
20		x 60
25		x 65
30		x 70
40		x 80
50		x 90
SSD-D-50- 5	7.5	M6x 45
10		x 50
15		x 55
20		x 60
25		x 65
30		x 70
40		x 80
50		x 90
SSD-D-63- 5	13	M8x 50
10		x 55
20		x 65
30		x 75
40		x 85
50		x 95
SSD-D-80- 5	12.5	M10x 55
10		x 60
20		x 70
30		x 80
40		x 90
50		x100
SSD-D-100- 5	13	M10x 65
10		x 70
20		x 80
30		x 90
40		x100
50		x110

Model No.	ℓ	dxL
SSD-D-125- 10	21	M12x 90
20		x100
30		x110
40		x120
50		x130
60		x140
70		x150
80		x160
90		x170
100		x180
SSD-D-140- 10	21	M12 x100
20		x110
30		x120
40		x130
50		x140
60		x150
70		x160
80		x170
90		x180
100		x190
SSD-D-160- 10	24.2	M14 x100
20		x110
30		x120
40		x130
50		x140
60		x150
70		x160
80		x170
90		x180
100		x190

For SSD-DL-□

Model No.	ℓ	dxL
SSD-DL-12- 5	6.5	M3x 35
10		x 40
15		x 45
20		x 50
25		x 55
30		x 60
SSD-DL-16- 5		M3x 35
10		x 40
15		x 45
20		x 50
25		x 55
30		x 60
SSD-DL-20- 5	9.5	M5x 45
10		x 50
15		x 55
20		x 60
25		x 65
30		x 70
SSD-DL-25- 5		M5x 50
10		x 55
15		x 60
20		x 65
25		x 70
30		x 75
40		x 85
50	14.5	x100
SSD-DL-32- 5	10	M5x 50
10		x 55
15		x 60
20		x 65
25		x 70
30		x 75
40		x 85
50	15	x100

Model No.	ℓ	dxL
SSD-DL-40- 5	6.5	M5x 55
10		x 60
15		x 65
20		x 70
25		x 75
30		x 80
40		x 90
50		x100
SSD-DL-50- 5	7.5	M6x 55
10		x 60
15		x 65
20		x 70
25		x 75
30		x 80
40		x 90
50		x100
SSD-DL-63- 5	13	M8x 60
10		x 65
20		x 75
30		x 85
40		x 95
50	18	x110
SSD-DL-80- 5	12.5	M10x 65
10		x 70
20		x 80
30		x 90
40		x100
50		x110
SSD-DL-100- 5	13	M10x 75
10		x 80
20		x 90
30		x100
40		x110
50		x120

Model No.	ℓ	dxL
SSD-DL-125- 10	21	M12x 90
20		x100
30		x110
40		x120
50		x130
60		x140
70		x150
80		x160
90		x170
100		x180
SSD-DL-140- 10	21	M12 x100
20		x110
30		x120
40		x130
50		x140
60		x150
70		x160
80		x170
90		x180
100		x190
SSD-DL-160- 10	24.2	M14 x100
20		x110
30		x120
40		x130
50		x140
60		x150
70		x160
80		x170
90		x180
100		x190

For SSD-K-□

Model No.	ℓ	dxL
SSD-K-12- 5	6.5	M3x 30
10		x 35
15		x 40
20		x 45
25		x 50
30		x 55
40		x 65
50		x 75
SSD-K-16- 5	6.5	M3x 30
10		x 35
15		x 40
20		x 45
25		x 50
30		x 55
40		x 65
50		x 75
SSD-K-20- 5	6	M5x 30
10		x 35
15		x 40
20		x 45
25		x 50
30		x 55
40		x 65
50		x 75
SSD-K-25- 10	8	M5x 40
15		x 45
20		x 50
25		x 55
30		x 60
40		x 70
50		x 80
60		x 90
70		x100
80		x110
90		x120
100		x130

Model No.	ℓ	dxL
SSD-K-32- 10	12.5	M5x 50
15		x 55
20		x 60
25		x 65
30		x 70
40		x 80
50		x 90
60		x100
70		x110
80		x120
90		x130
100		x140
SSD-K-40- 10	6	M5x 50
15		x 55
20		x 60
25		x 65
30		x 70
40		x 80
50		x 90
60		x100
70		x110
80		x120
90		x130
100		x140
SSD-K-50- 10	11	M6x 55
15		x 60
20		x 65
25		x 70
30		x 75
40		x 85
50	16	x 95
60		x110
70		x120
80		x130
90		x140
100		x150

Model No.	ℓ	dxL
SSD-K-63- 10	13	M8x 60
20		x 70
30		x 80
40		x 90
50		x100
60		x110
70		x120
80		x130
90		x140
100		x150
SSD-K-80- 10	17.5	M10x 70
20		x 80
30		x 90
40		x100
50		x110
60		x120
70		x130
80		x140
90		x150
100		x160
SSD-K-100- 10	18	M10x 80
20		x 90
30		x100
40		x110
50		x120
60		x130
70		x140
80		x150
90		x160
100		x170

SCP*3
CMK2
CMA2
SCM
SCG
SCA2
SCS2
CKV2
CAV2/ COVP/N2
SSD2
SSG
SSD
CAT
MDC2
MVC
SMG
MSD/ MSDG
FC*
STK
SRL3
SRG3
SRM3
SRT3
MRL2
MRG2
SM-25
ShkAbs
FJ
FK
Spd Contr
Ending

For SSD-KL-□

Model No.	ℓ	dxL
SSD-KL-12- 5	6.5	M3x 35
10		x 40
15		x 45
20		x 50
25		x 55
30		x 60
40		x 70
50		x 80
SSD-KL-16- 5	6.5	M3x 35
10		x 40
15		x 45
20		x 50
25		x 55
30		x 60
40		x 70
50		x 80
SSD-KL-20- 5	6	M5x 40
10		x 45
15		x 50
20		x 55
25		x 60
30		x 65
40		x 75
50		x 85
SSD-KL-25- 10	8	M5x 50
15		x 55
20		x 60
25		x 65
30		x 70
40		x 80
50		x 90
60		x100
70		x110
80		x120
90		x130
100		x140

Model No.	ℓ	dxL
SSD-KL-32- 10	12.5	M5x 60
15		x 65
20		x 70
25		x 75
30		x 80
40		x 90
50		x100
60		x110
70		x120
80		x130
90		x140
100		x150
SSD-KL-40- 10	6	M5x 60
15		x 65
20		x 70
25		x 75
30		x 80
40		x 90
50		x100
60		x110
70		x120
80		x130
90		x140
100		x150
SSD-KL-50- 10	11	M6x 65
15		x 70
20		x 75
25		x 80
30		x 85
40		x 95
50	16	x110
60		x120
70		x130
80		x140
90		x150
100		x160

Model No.	ℓ	dxL
SSD-KL-63- 10	13	M8x 70
20		x 80
30		x 90
40		x100
50		x110
60		x120
70		x130
80		x140
90		x150
100		x160
SSD-KL-80- 10	17.5	M10x 80
20		x 90
30		x100
40		x110
50		x120
60		x130
70		x140
80		x150
90		x160
100		x170
SSD-KL-100- 10	18	M10x 90
20		x100
30		x110
40		x120
50		x130
60		x140
70		x150
80		x160
90		x170
100		x180

For SSD-M-□

Model No.	ℓ	dxL
SSD-M-12- 5	6.5	M3x30
10		x35
15		x40
20		x45
25		x50
30		x55
SSD-M-16- 5		M3x30
10		x35
15		x40
20		x45
25		x50
30		x55
SSD-M-20- 5	6	M5x30
10		x35
15		x40
20		x45
25		x50
30		x55
SSD-M-25- 5	8	M5x35
10		x40
15		x45
20		x50
25		x55
30		x60
40		x70
50		x80

Model No.	ℓ	dxL
SSD-M-32- 5	7.5	M5x40
10		x45
15		x50
20		x55
25		x60
30		x65
40		x75
50		x85
SSD-M-40- 5	6	M5x40
10		x45
15		x50
20		x55
25		x60
30		x65
40		x75
50		x85
SSD-M-50- 5	11	M6x45
10		x50
15		x55
20		x60
25		x65
30		x70
40		x80
50		x90

Model No.	ℓ	dxL
SSD-M-63- 5	13	M8x50
10		x55
20		x65
30		x75
40		x85
50		x95

For SSD-ML-□

Model No.	ℓ	dxL
SSD-ML-12- 5	6.5	M3x40
10		x40
15		x45
20		x50
25		x55
30		x60
SSD-ML-16- 5		M3x40
10		x40
15		x45
20		x50
25		x55
30		x60
SSD-ML-20- 5	6	M5x40
10		x45
15		x50
20		x55
25		x60
30		x65
SSD-ML-25- 5	8	M5x45
10		x50
15		x55
20		x60
25		x65
30		x70
40		x80
50		x90

Model No.	ℓ	dxL
SSD-ML-32- 5	7.5	M5x 50
10		x 55
15		x 60
20		x 65
25		x 70
30		x 75
40		x 85
50	12.5	x100
SSD-ML-40- 5	6	M5x 50
10		x 55
15		x 60
20		x 65
25		x 70
30		x 75
40		x 85
50	11	x100
SSD-ML-50- 5	11	M6x 55
10		x 60
15		x 65
20		x 70
25		x 75
30		x 80
40		x 90
50		x100

Model No.	ℓ	dxL
SSD-ML-63- 5	13	M8x 60
10		x 65
20		x 75
30		x 85
40		x 95
50	18	x110

For SSD-Q□□□H/R

Model No.	ℓ	dxL
SSD-Q-16- 5	5.5	M3x 60
10		x 65
15		x 70
20		x 75
25		x 80
30	10.5	x 90
40		x100
50	When bolts are not available, screw-mount the body.	
SSD-Q-20- 5	12.5	M5x 65
10		x 70
15		x 75
20		x 80
25		x 85
30		x 90
40		x100
50		x110

Model No.	ℓ	dxL
SSD-Q-25- 10	9.5	M5x 70
15		x 75
20		x 80
25		x 85
30		x 90
40		x100
50		x110
60		x120
70		x130
80		x140
90		x150
100		x160
SSD-Q-32- 10	13.5	M5x 80
15		x 85
20		x 90
25		x 95
30		x100
40		x110
50		x120
60		x130
70		x140
80		x150
90		x160
100		x170

Model No.	ℓ	dxL
SSD-Q-40- 10	10	M5x 90
15		x 95
20		x100
25		x105
30		x110
40		x120
50		x130
60		x140
70		x150
80		x160
90		x170
100		x180
SSD-Q-50- 10	12	M6x110
15		x115
20		x120
25		x125
30		x130
40		x140
50		x150
60		x160
70		x170
80		x180
90		x190
100		x200

Model No.	ℓ	dxL
SSD-Q-63- 10	19	M8x120
20		x130
30		x140
40		x150
50		x160
60		x170
70		x180
80		x190
90		x200
100		x210
SSD-Q-80- 10	12	M10x140
20		x150
30		x160
40		x170
50		x180
60		x190
70		x200
80		x210
90		x220
100		x230
SSD-Q-100- 10	12	M10x140
20		x150
30		x160
40		x170
50		x180
60		x190
70		x200
80		x210
90		x220
100		x230

For SSD-QL□□□H/R

Model No.	ℓ	dxL
SSD-QL-16- 5	5.5	M3x 65
10		x 70
15		x 75
20		x 80
25	10.5	x 90
30	5.5	x 90
40		x100
50	When bolts are not available, screw-mount the body.	
SSD-QL-20- 5	12.5	M5x 75
10		x 80
15		x 85
20		x 90
25		x 95
30		x100
40		x110
50		x120

Model No.	ℓ	dxL
SSD-QL-25- 10	9.5	M5x 80
15		x 85
20		x 90
25		x 95
30		x100
40		x110
50		x120
60		x130
70		x140
80		x150
90		x160
100		x170
SSD-QL-32- 10	13.5	M5x 90
15		x 95
20		x100
25		x105
30		x110
40		x120
50		x130
60		x140
70		x150
80		x160
90		x170
100		x180

Model No.	ℓ	dxL
SSD-QL-40- 10	10	M5x100
15		x105
20		x110
25		x115
30		x120
40		x130
50		x140
60		x150
70		x160
80		x170
90		x180
100		x190
SSD-QL-50- 10	12	M6x120
15		x125
20		x130
25		x135
30		x140
40		x150
50		x160
60		x170
70		x180
80		x190
90		x200
100		x210

Model No.	ℓ	dxL
SSD-QL-63- 10	19	M8x130
20		x140
30		x150
40		x160
50		x170
60		x180
70		x190
80		x200
90		x210
100		x220
SSD-QL-80- 10	12	M10x150
20		x160
30		x170
40		x180
50		x190
60		x200
70		x210
80		x220
90		x230
100		x240
SSD-QL-100- 10	12	M10x150
20		x160
30		x170
40		x180
50		x190
60		x200
70		x210
80		x220
90		x230
100		x240

MEMO

Pneumatic components

Safety Precautions

Be sure to read this section before use.
Refer to Intro Page 73 for general information of the cylinder, and to Intro Page 80 for general information of the cylinder switch.

Product-specific cautions: Compact cylinder SSD Series

Design/selection

1. With heat resistant cylinder switch SSD-T1L

WARNING

■ Cylinder
At an ambient temperature of 150°C, external leakage will occur gradually after approximately 500,000 uses.

■ Heat resistant cylinder switch
Indicatoruses LEDs. Visibility will gradually decrease with continuous use under high temperatures. As the LED lamp circuit is separated from the switch output circuit, the switch output works normally even if the LED lamp turns OFF.

2 . Rubber-air cushionwith SSD-K-*C

CAUTION

■ Note that, structurally, the stroke end position cannot be retained if air supply is cut off. When detecting the stroke end by switch, set the switch position with pneumatic pressure applied, as otherwise the position may be out of the detection range.

3 . Position locking SSD-Q

WARNING

■ If pressure is supplied to port Ⓐ when both ports are not pressurized and the piston is locked, the lock may not be released or the piston rod may suddenly pop out just after the lock is released. This can be extremely hazardous. To release the lock mechanism, make sure to supply pressure to port Ⓑ. Check that load is not applied to the lock mechanism.

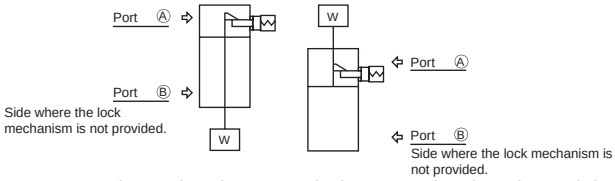

■ For usage where the drop rate is increased using the quick exhaust valve, the lock may not release normally because the cylinder body starts operating before the lock pin. Position locking cylinderdoes not use the quick exhaust valve.

■ Do not use 3-position valves.
Do not use the cylinder in combination with a 3-position (especially, closed center metal seal type) valve. If the port at the side where the lock mechanism is provided is pressurized, the lock cannot be engaged. Even if it is locked once, the air leaked from the valve enters the cylinder, and the lock may be released after a certain period of time.

CAUTION

■ Cylinder load factor must be 50% or less.
If the load factor is high, the lock may not be released, or the lock section may be damaged.

■ If back pressure is applied to the locking mechanism, the lock may be released. Use a discrete valve, or an individual exhaust manifold.

■ Do not use multiple synchronized cylinders.
Do not use so that 1 workpiece is moved by synchronizing 2 or more position locking cylinders. Lock release may fail for one of the cylinders.

4. Fine speed SSD-F/SSD-KF

CAUTION

■ Use without lubrication.
Applying lubrication may cause changes in characteristics.

■ Assemble the speed controller near the cylinder.
When installed far from the cylinder, the speed becomes unstable. Use SC-M3/M5, SC3W, SCD-M3/M5,SC3U Series speed controllers.

■ At the higher air pressure,,The speed is more stable at lower load factor.
Use at a 50% or less load factor.

■ Stable speed control is achieved with a meter-out circuit.
When fine speed activation is performed with operating direction PUSH for the single rod cylinder, the popping out phenomenon occurs when operation starts if the load resistance is low. For countermeasures, use the ⓑ, ⓒ or ⓓ circuit. Note that circuit ⓓ is the most stable.

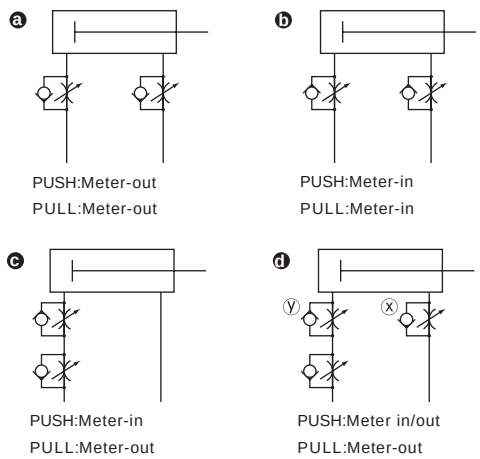

ⓓSpeed adjustment method for PUSH operation of ⓓ circuit:
1. Set the speed with the speed controller x.
2. Restrict the speed with the speed controller y until there is no popping out.
3. Check the speed again.

(*1) When comparing ⓑ ⓒ ⓓ, the circuit ⓓ is the most stable.

(*2) For vertical mounting, combine the cylinder with a meter-out circuit, as it will fall under its own weight when a meter-in circuit is used.

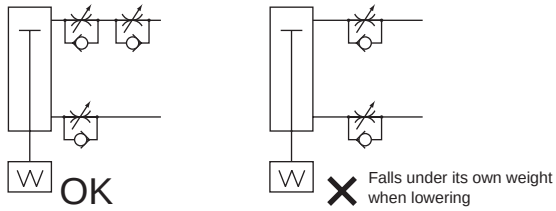

(*3) Use the circuit shown in the figure below for the serial connection of the speed controllers.

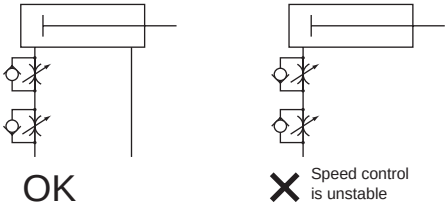

(Guidelines for pop-out generation)

Popping out occurs in the following cases.

· Thrust > Resistance

* Resistance: Thrust caused by residual pressure on the exhaust side (in the fine speed, suction pressure = residual pressure) + { When using horizontally: frictional force caused by load / When using vertically: load self-weight

■ Do not apply a lateral load to the cylinder.
With a lateral load, operation will become unstable.

■ Avoid using this product where vibration is present.
The product will be adversely affected by vibration and operation will become unstable.

5. Low friction SSD-KU

⚠ WARNING

■ Durability differs based on working conditions and model characteristics.
This cylinder has internal leakage.
Refer to specifications (page 1184) for amount of leakage.

⚠ CAUTION

■ Mount a speed controller on the cylinder.
Mount the speed controller on the cylinder.
Use each cylinder within the applicable working piston speed range.
When using the cylinder for a balancer, etc., it may be advisable not to mount a speed controller in order to improve the supply and exhaust efficiency. Depending on the application, circuits ⓐ to ⓒ below are recommended.

ⓐ Tension control (winding machine, etc.)

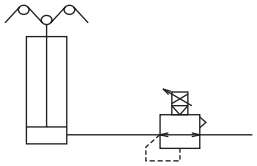

ⓑ Balancer (processing machine Z-axis, etc.)

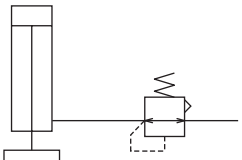

ⓒ Load control (grinding, etc.)

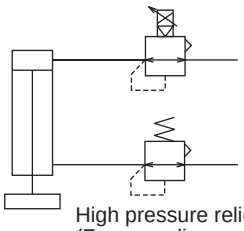

* To improve the supply and exhaust efficiency, make the volume of piping as large as possible.

■ Do not lubricate. The properties fluctuate.

■ Because poor quality air worsens the characteristics and adversely affects the durability, use clean air with the piping below.

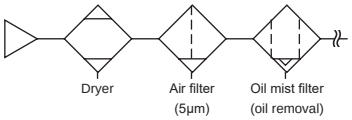

■ Assemble the speed controller near the cylinder.
When installed far from the cylinder, the speed becomes unstable.

■ In general, the speed is stabler at higher air pressure and lower load factor.
Use at a 50% or less load factor.

■ A rubber cushion is built into the compact cylinder high load. The table on page 1336 shows the kinetic energy which can be absorbed by the cushion. If kinetic energy exceeds these values, consider using a separate shock absorber.

SCP*3
CMK2
CMA2
SCM
SCG
SCA2
SCS2
CKV2
CAV2/COVP/N2
SSD2
SSG
SSD
CAT
MDC2
MVC
SMG
MSD/MSDG
FC*
STK
SRL3
SRG3
SRM3
SRT3
MRL2
MRG2
SM-25
ShkAbs
FJ
FK
Spd Contr
Ending

Bore size (mm)	Allowable absorbed energy (J)	
	SSD-K	SSD-KU
ø12	0.04	-
ø16	0.09	-
ø20	0.16	
ø25	0.16	
ø32	0.40	
ø40	0.63	
ø50	0.98	
ø63	1.56	
ø80	2.51	
ø100	3.92	

$$\text{Kinetic energy (J)} = \frac{1}{2} \times \text{Weight (kg)} \times \{\text{Speed (m/s)}\}^2$$

(Note) Calculating kinetic energy

Average cylinder speed is $Va = \frac{L}{T}$ is obtained with.

Va : Average speed (m/s)
L : Cylinder stroke (m)
T : Operation time (s)

With respect to this, the cylinder speed just before the stroke end can be obtained with the following simplified formula.

$$Vm = \frac{L}{T} \times \left(1 + 1.5 \times \frac{\omega}{100}\right)$$

Vm : Speed immediately prior to stroke end (m/s)
ω : Cylinder load factor (%)

Use this Vm value as speed to calculate kinetic energy.

The following is a graph which shows the allowable energy values of the compact cylinder high load in the form of the relationship between the piston speed and the load.

High load allowable energy value graph

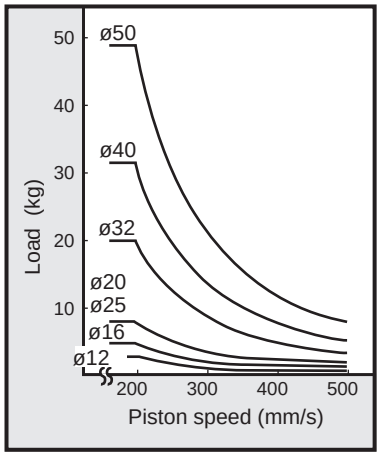

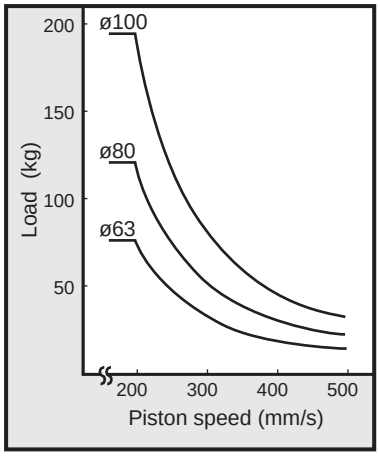

● Note: Usable in the range below and to the left of the curve.
For the upper right range, an external cushion is required.

6. Coolant proof SSD-G2/G3 / SSD-KG2/KG3

⚠ CAUTION

■ Do not apply an eccentric load to the piston rod. The service life of the scraper or bearing could be shortened.

■ If the piston rod is not exposed to splattered coolant or water, use the G or G1 Series.
In the case that the G2 or G3 Series are not exposed to splattering of coolant or water, the lubrication of the piston rod will run out and the service life will be shortened.

■ Mount a speed controller on the cylinder.
● Mount a speed controller on the cylinder. Use each cylinder within the applicable working piston speed range.

7. Anti-spatter adherence SSD-G4/SSD-KG4/SSD-DG4

⚠ WARNING

■ The durability of this cylinder series is improved in comparison to standard cylinders when used in an atmosphere exposed to spatter. But durability may be shorter than the standard cylinder when used in other atmospheres.

Mounting, installation and adjustment

1. Common

⚠CAUTION

■ The cylinder switch may malfunction if there is a magnetic substance such as a metal plate installed adjacently. Confirm that a distance of at least 10 mm is allocated from the surface of the cylinders.
(Same clearance for all bore sizes)

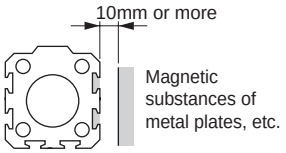

■ The cylinder switch may malfunction if cylinders are installed adjacently. Check that the following distances are allocated between cylinders. (Same clearance for all bore sizes)

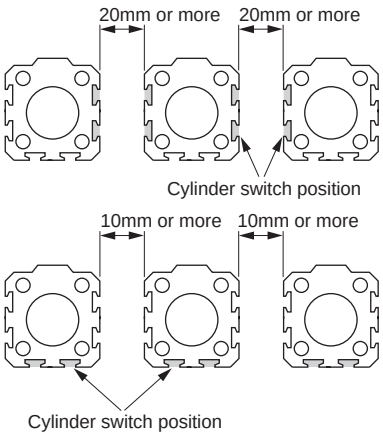

■ As compatible piping fittings are limited, refer to the table below to select the fitting.

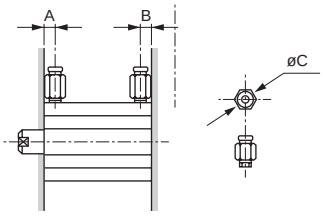

Item / Bore size (mm)	Port size	Port position A	Port position B	Applicable fittings	Fitting O.D. øC	Inapplicable fittings
ø12	M5	5.5	5.5	SC3W-M5-4 SC3W-M5-6 GWS4-M5-S GWS4-M5 GWL4-M5 GWL6-M5	ø11 or less	GWS6-M5
ø16						
ø20		8	5.5			
ø25		11	6			
ø32	Rc1/8	8	8	SC3W-6-4, 6, 8 GWS4-6 GWS6-6 GWS8-6 GWL4-6 GWL6-6	ø15 or less	GWS10-6 GWL8-6 GWL10-6
ø40		12	8.5			
ø50	Rc1/4	10.5	10.5	SC3W-8-6, 8, 10 GWS4-8 GWS6-8 GWS10-8 GWL4 to 12-8	ø21 or less	GWS12-8
ø63		13	11			
ø80	Rc3/8	16	13	SC3W-10-6, 8, 10 GWS6-10 GWS8-10 GWS10-10 GWL6 to 12-10	ø21 or less	-
ø100		23	15			

2. Single acting SSD-X/SSD-Y

⚠CAUTION

■ Do not leave the single acting cylinder pressurized.
If it is left pressurized for long periods, the piston rod may not return due to spring load when the pressure is released. Use the double acting if the cylinder needs to be left pressurized for long periods.

3. Position locking SSD-Q

⚠CAUTION

■ The lock mechanism functions at the stroke end, so that if the stopper is engaged during the stroke by the external stopper, the lock mechanism may not work and the piston could fall. When setting a load, make sure to install after checking that the locking mechanism works.

■ Supply pressure equal to or higher than the min. working pressure to the port on the lock mechanism side.

■ When the piping at the side where the lock mechanism is provided is long and thin, or when the speed controller is far away from the cylinder port, note that it takes time to engage the lock. Clogging in the silencer mounted on the EXH port of the valve may cause the same result.

4. Fine speed SSD-F/SSD-KF

⚠CAUTION

■ Perform adjustment such as centering so that a lateral load is not applied to the cylinder.
Adjust and install the sliding guide so that it is not twisted.
- When the load or the resistance fluctuates, operation becomes unstable.
- With a large difference between static friction and kinematic friction of the guide, operation becomes unstable.

5. Low friction SSD-KU

⚠CAUTION

■ Perform adjustment such as centering so that lateral load is not applied to the cylinder.
Adjust and install the sliding guide so that it is not twisted.
- When the load or the resistance fluctuates, operation becomes unstable.
- For the long stroke type, the piston rod's own weight causes the speed to become unstable. Install the guide before use.
- With a large difference between static friction and kinematic friction of the guide, operation becomes unstable.

■ Avoid using in environments with water vapor or high humidity or in alkaline atmospheres.

6. Rotation-stop SSD-M

⚠ CAUTION

■ Do not use the product so as to apply rotation torque to the piston rod.
The bushing for the rotation lock may deform and significantly shorten the service life.

■ When fixing a workpiece onto the tip of the piston rod, retract the piston rod to the stroke end and apply a wrench to the section protruding from the rod's parallel section. Tighten so that torque is not applied to the cylinder body.

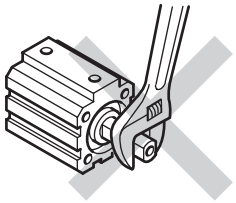

Use/maintenance

1. Common

⚠ WARNING

■ Use appropriate pliers (C-snap ring mounting tool) to install and remove rod metal.

■ Even in cases when appropriate pliers (C-snap ring mounting tool) are used, be careful as the snap ring may pop out at the tip of the pliers (C-snap ring mounting tool) and cause physical or equipment damage.
In addition, when mounting the unit, be sure that the unit fits securely into the snap ring groove before supplying air.

2. Rubber-air cushioned SSD-K-*C

⚠ CAUTION

■ Do not rapidly discharge air from the cylinder after performing low speed operation outside the catalog specifications range. (Example: Removing piping or coupler, etc.) The rubber air cushion may become detached. Be careful that the possibility of occurrence of this may increase especially when the air pressure is high.

3. Position locking SSD-Q

⚠ WARNING

■ For safety purposes, prevent the load from falling under its own weight during maintenance.

■ When stopping the piston with an external buffer device (shock absorber, etc.), adjust it so that there is no bound.
If the piston bounds at the stroke end, the sleeve and stopper piston will collide strongly and may result in damage of the locking mechanism.
Inspect the piston once or twice a year to make sure there is no damage to the retainer caused by this phenomenon.

⚠ CAUTION

■ After the locking mechanism is manually operated, make sure to return the locking mechanism to the original state before use. Do not perform manual operation except for adjustment, as it is dangerous.

■ When mounting or adjusting the cylinder, release the lock.
If mounting work, etc., is done while the lock is engaged, the lock part may be damaged.

■ Use the speed controller with meter-out.
If the meter-in control is used, the lock may not be able to be released.

■ At the side where the lock mechanism is attached, be sure to use the cylinder from the stroke end.
If the cylinder piston does not reach the stroke end, the lock may not be engaged or the lock may not be able to be released.

■ Manual override non-locking release method
By screwing the hexagon socket head cap screw into the stopper piston and pulling the bolt X mm with force of 20 N or more, the stopper piston moves and the lock is released. (when horizontally installed with no load or with the opposite side port pressurized). When the screw is released, the internal spring causes the stopper piston to return. When it fits into the piston rod groove, the piston is locked.

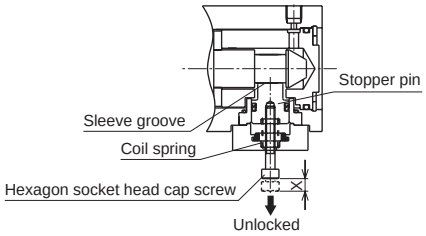

Hexagon socket head cap screw dimensions and travel distance Unit: mm

Bore size	Dimensions	Travel distance X
ø16	M3x20	2.5
ø20	M3x20	3
ø25	M3x20	3
ø32	M3x20	3
ø40	M3x20	3
ø50	M4x30	4
ø63	M4x30	4
ø80	M4x30	4
ø100	M4x30	4

4. Low friction SSD-U

⚠ CAUTION

■ Do not disassemble the product. Once disassembled, the performance may not be retained. For this product, repair parts only are not available.

5. Coolant proof SSD-G2/G3 / SSD-KG2/KG3

⚠ CAUTION

■ Smoking with hands smeared with the fluorine grease used for the G3 Series could generate harmful gases and cause physical harm.

CAT

Cartridge cylinder

ø6/ø10/ø15

Space saving structure

Overview

Cylinder outside diameter is full-thread thumb size. This cylinder is a miniature single acting cylinder that returns with spring when pulled.

Features

Miniature size

This cylinder realizes a miniature body by dramatically reducing its total length and also achieving an inner diameter of ø6 to ø15. This cylinder can be mounted in a small space, allowing equipment downsizing.

Easy to mount

As the tube outer diameter is threaded, it is easy to mount on the jig or panel, etc.

2 types of mounting methods

For mounting, the inset and panel mounting are available. For the inset, sealing method with a washer is used and O-ring/reaming, etc., is not required.

One air pipe

As this cylinder uses single acting push method, it can be activated with only one air pipe.

End shape options

For end shape of the piston rod, male thread and without thread are available. Can be selected depending on the purpose.

CONTENTS

Series variation	1339
● Single acting/push (CAT)	1340
⚠ Safety precautions	1344

●: Standard, ◎: Option, : Not available

Variation	Model No. JIS symbol	Bore size (mm)	Stroke (mm)			Mounting		Piston rod end		Switch	Page
			5	10	15	N Panel mount	O Inset	M Male thread	F No thread		
Single acting/ push	CAT	ø6/ø10/ø15	●	●	●	●	●	◎	◎		1340

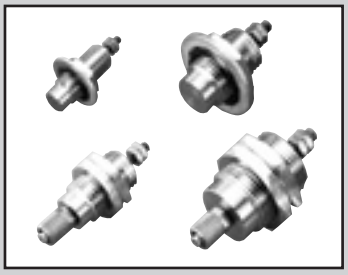

Cartridge cylinder single acting/push

CAT Series

● Bore size: ø6/ø10/ø15

JIS symbol ● Single acting cylinder

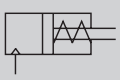

RoHS CAD

Specifications

Item	CAT		
Bore size mm	ø6	ø10	ø15
Actuation	Single acting/push (spring return method)		
Working fluid	Compressed air		
Max. working pressure MPa	0.7		
Min. working pressure MPa	0.2	0.15	
Proof pressure MPa	1.05		
Ambient temperature °C	-10 to 60 (no freezing)		
Port size	M5		
Stroke tolerance mm	+1.0 0		
Working piston speed mm/s	50 to 500		
Cushion	No		
Lubrication	Not required (use turbine oil class 1 ISO VG32 if lubrication is necessary)		
Allowable absorbed energy J	This product cannot absorb the energy generated by an external load mounted on the cylinder. When using the product with no load, separately provide a shock absorber on the outside.		

*1: Do not leave the single acting cylinder pressurized for long periods or the piston rod may not return due to spring load when the pressure is released.

Stroke

Bore size (mm)	Standard stroke(mm)
ø6	5/10/15
ø10	
ø15	

Note: Products with stroke other than standard stroke are not available.

Cylinder weight

(Unit: g)

Stroke (mm) / Bore size (mm)	5	10	15
ø6	18.0	21.0	23.0
ø10	43.5	50.0	56.0
ø15	100.0	114.5	128.0

Spring load(Load when pulling) (Unit: N)

Bore size (mm)	Stroke (mm)	When stroke = 0	At full stroke
ø6	5	1.92	3.85
	10	1.37	3.33
	15	1.17	3.66
ø10	5	3.92	6.8
	10	3.43	7.4
	15	2.94	9.04
ø15	5	5.88	8.82
	10	4.41	8.82
	15	3.92	9.8

Theoretical thrust (push)

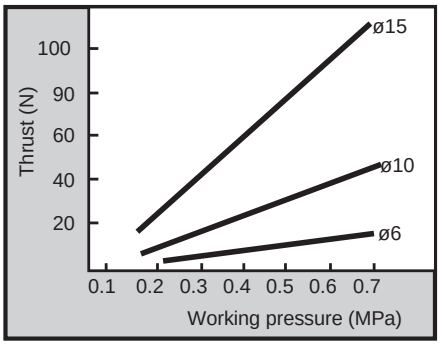

How to order

No switch

CAT - N - 6 - 5 - M

Ⓐ Mounting
Ⓑ Bore size
Ⓒ Stroke
Ⓓ Piston rod end

Code	Description
Ⓐ Mounting	
N	Panel mount
O	Inset
Ⓑ Bore size (mm)	
6	ø6
10	ø10
15	ø15
Ⓒ Stroke (mm)	
5	5
10	10
15	15
Ⓓ Piston rod end	
M	Male thread
F	No thread

[Example of model No.]

CAT-N-6-5-M

Model: Cartridge cylinder, single acting/push
Ⓐ Mounting : Panel mount
Ⓑ Bore size : ø6 mm
Ⓒ Stroke : 5 mm
Ⓓ Piston rod end : Male thread

Internal structure and parts list

● Panel mount (N)

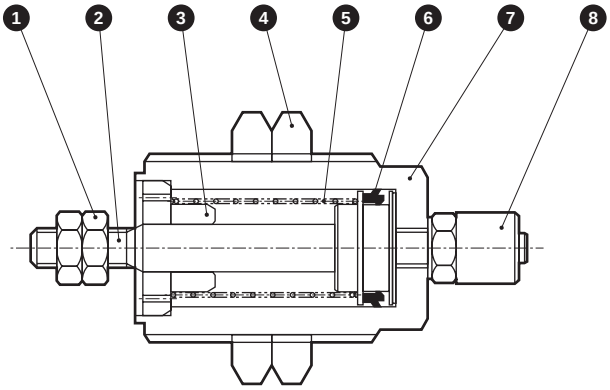

● Inset (O)

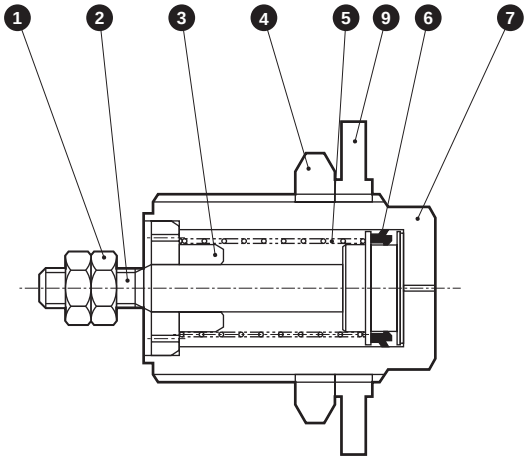

Cannot be disassembled

No.	Part name	Material	Remarks	No.	Part name	Material	Remarks
1	Hexagon nut	Stainless steel		5	Coil spring	Steel	Electrodeposition
				6	Piston packing	Nitrile rubber	
2	Piston rod	Stainless steel		7	Body	Copper alloy	Nickeling
3	Rod cover	Phosphor bronze	Nickeling	8	Clamping nipple		
4	Nut	Copper alloy	Nickeling	9	Seal washer	Nitrile rubber, steel	

Note: This product cannot be disassembled.

Dimensions

● Panel mount (N)

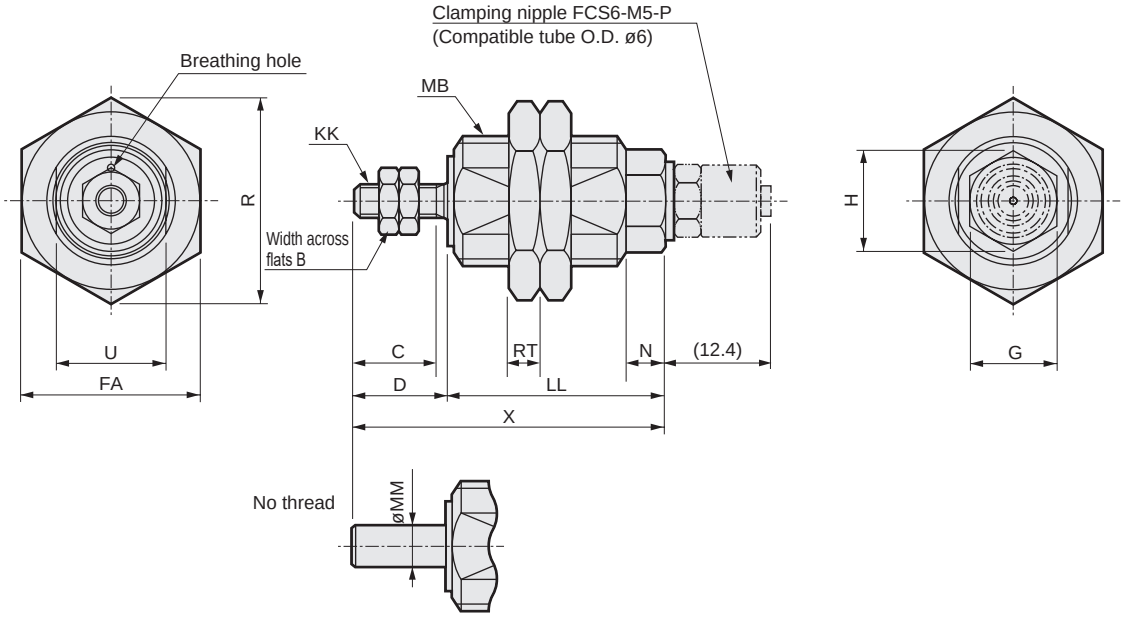

Note: For air piping, use the included clamping nipple (orifice size ø0.8).

Code / Bore size (mm)	B	C	D	FA	G	H	KK	LL Stroke 5	LL Stroke 10	LL Stroke 15	MB	MM	N	R	RT	U	X Stroke 5	X Stroke 10	X Stroke 15
ø6	5.5	7	8.5	14	$7^{0}_{-0.2}$	8.1	M3	19	26	32	M10x1	3	5	16.2	3	$8^{0}_{-0.2}$	27.5	34.5	40.5
ø10	7	10	11.5	22	$11^{0}_{-0.25}$	12.7	M4	21	27	33.5	M16x1.5	5	5	25.4	4	$13.5^{0}_{-0.25}$	32.5	38.5	45
ø15	8	12	13.5	30	$18^{0}_{-0.25}$	20.8	M5	24	30	36	M24x1.5	6	6	34.6	5	$22^{0}_{-0.35}$	37.5	43.5	49.5

● Inset (O)

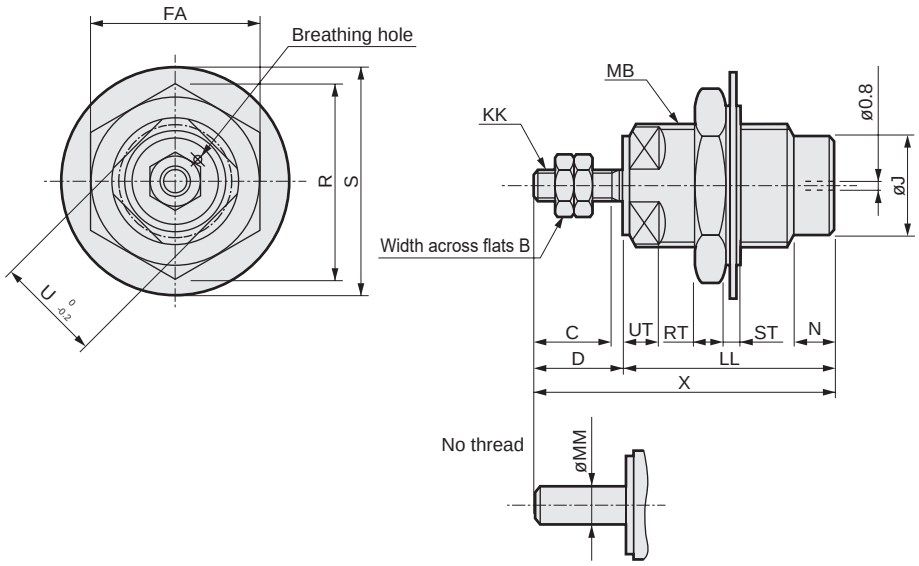

Code / Bore size (mm)	B	C	D	FA	J	KK	LL Stroke 5	LL Stroke 10	LL Stroke 15	MB	MM	N	R	RT	S	ST	U	UT	X Stroke 5	X Stroke 10	X Stroke 15
ø6	5.5	7	8.5	14	8.5	M3	19	26	32	M10x1	3	5	16.2	3	20.3	1.5	9	3.5	27.5	34.5	40.5
ø10	7	10	11.5	22	13	M4	21	27	33.5	M16x1.5	5	5	25.4	4	30.3	2	14	4.5	32.5	38.5	45
ø15	8	12	13.5	30	21	M5	24	30	36	M24x1.5	6	6	34.6	5	42.8	3	22	5.5	37.5	43.5	49.5

Safety Precautions

Be sure to read this section before use.

Refer to Intro Page 73 for general information of the cylinder, and to Intro Page 80 for general information of the cylinder switch.

Product-specific cautions: Cartridge cylinder CAT Series

Mounting, installation and adjustment

CAUTION

■ Do not use the product so as to apply load when pulling the piston rod.
Because the cylinder built-in spring has only returning force for the piston rod, the rod cannot be returned to the stroke end when a load is applied.

■ Do not leave the single acting cylinder pressurized.
If it is left pressurized for long periods, the piston rod may not return due to spring load when the pressure is released.

■ For the single acting cylinder, take care when mounting so as not to block the breathing hole provided on the cover surface. Otherwise, malfunctions may result.

■ When using CAT-N (panel mounting), only use the included clamping nipple (FCS6-M5-P; orifice size ø0.8 mm). Otherwise, malfunctions or body damage may result.

■ For applicable clamping tube, our model No. F-1506 (outer diameter 6 mm, inner diameter 4 mm) is recommended.

■ When using CAT-O (inset), make sure that the washer sealing portion does not make contact with the 2 WAF for wrench application. Failure to do so may lead to air leakage.

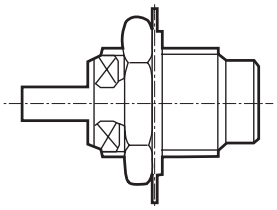

Use/maintenance

CAUTION

■ Because this cylinder is a non-disassembly type, do not apply excessive force to the rod cover or body.

MDC2

Small direct mounting cylinder

ø4/ø6/ø8/ø10

Space saving structure

Overview

This cylinder body has an inner diameter of ø4 to ø10 and can be directly mounted from 4 directions. Can be used for ejection of workpiece or shutter of parts feeder.

Features

Direct mount

As a square body is adopted, it can be directly mounted.
4 surfaces for 4 mounting directions!

Space saving design

Total length dimension and outer diameter dimension are minimized as much as possible to reduce installation space.

With spigot at rod side

As there is a spigot at the rod metal portion, it is easy to perform centering.

Variation

Depending on applications, double acting/single acting push or single acting pull can be selected.

Serialized with switch

Miniature reed/proximity switch can be mounted. (excluding ø4)

CONTENTS

Series variation	1346
Variation and option combination selection table	1347
● Double acting/single rod (MDC2)	1348
● Single acting/push (MDC2-X)	1354
● Single acting/pull (MDC2-Y)	1354
● Double acting/fine speed (MDC2-F)	1364
⚠ Safety precautions	1368

Small direct mounting cylinder MDC2 Series

●: Standard, ◎: Option, : Not available

Variation	Model No. JIS symbol	Bore size (mm)	Standard stroke (mm) 3	4	6	8	10	Min. stroke (mm)	Max. stroke (mm)	Switch	Page
Double acting/ single rod with switch	MDC2 MDC2-L	ø4	●		●			3	6		1348
		ø6		●	●	●		4	8	◎	
		ø8		●	●	●				◎	
		ø10		●	●		●		10	◎	
Single acting/ push with switch	MDC2-X MDC2-XL	ø4	●		●			3	6		1354
		ø6		●	●	●		4	8	◎	
		ø8		●	●	●				◎	
		ø10		●	●		●		10	◎	
Single acting/ pull with switch	MDC2-Y MDC2-YL	ø4	●		●			3	6		1354
		ø6		●	●	●		4	8	◎	
		ø8		●	●	●				◎	
		ø10		●	●		●		10	◎	
Double acting/ fine speed with switch	MDC2-F MDC2-LF	ø6		●	●	●		4	8	◎	1364
		ø8		●	●	●				◎	
		ø10		●	●		●		10	◎	

Variation and option combination selection table

◎: Option
○: Available (made-to-order product)
△: Available depending on conditions (Contact CKD.)
x: Not available

Category		Category	Variation					Port thread			Option		
			Double acting/single rod	Single acting/push	Single acting/pull	With cylinder switch	Fine speed	NPT	G		Copper and PTFE free	Clean-room specifications (exhaust port)	Clean-room specifications (vacuum treatment)
		Code	None	X	Y	L	F	N	G		P6	P7	P71
Variation	Double acting/single rod	Blank						x	x		○	◎	◎
	Single acting/push	X			x	◎	x	x	x		○	x	x
	Single acting/pull	Y				◎	x	x	x		○	x	x
	With cylinder switch	L					◎	x	x		○	◎	◎
	Fine speed	F						x	x		x	◎	◎
Port thread	NPT	N							x		x	x	x
	G	G									x	x	x
Option	Copper and PTFE free	P6										x	x
	Clean-room specifications (exhaust port)	P7											x
	Clean-room specifications (vacuum treatment)	P71											
Accessory	Cylinder switch	Listed separately	◎	◎	◎	◎	◎	x	x		○	◎	◎

*1: Refer to “Components for Clean Room Specifications” No. CB-033SA for the clean room specifications P7 and P71.

[Example of model No.]

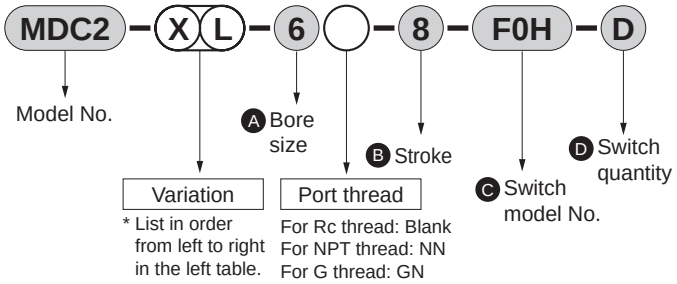

Model No.: Small direct mounting cylinder
● Variation: Single acting/push/with switch
Ⓐ Bore size : ø6 mm
Ⓑ Stroke : 8 mm
Ⓒ Switch model No.: Reed FO switch, lead wire 1 m
Ⓓ Switch quantity : 2

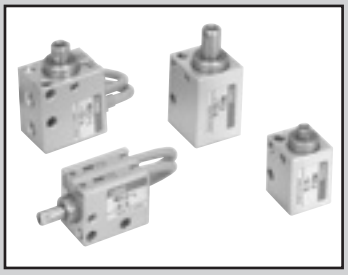

Compact direct mounting cylinder double acting/single rod

MDC2 Series

● Bore size: ø4, ø6, ø8, ø10

JIS symbol

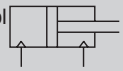

● Double acting

Specifications

Item	MDC2 MDC2-L (with switch)			
Bore size mm	ø4 *1	ø6	ø8	ø10
Actuation	Double acting			
Working fluid	Compressed air			
Max. working pressure MPa	0.7 (≈100 psi, 7 bar)			
Min. working pressure MPa	0.2 (≈29 psi, 2 bar)	0.15 (≈22 psi, 1.5 bar)		0.1 (≈15 psi, 1 bar)
Proof pressure MPa	1.05 (≈150 psi, 10.5 bar)			
Ambient temperature °C	-10 (14°F) to 60 (140°F) (no freezing) *2			
Port size	M3			M5
Stroke tolerance mm	+0.5 0			
Working piston speed mm/s	50 to 500			
Cushion	None			
Lubrication	Not required (use turbine oil class 1 ISO VG32 if necessary for lubrication)			
Allowable absorbed energy J	This product cannot absorb the energy generated by an external load mounted on the cylinder. When using the product with no load, separately provide a shock absorber on the outside.			

*1: ø4 is not available for MDC2-L.
*2: When using the proximity switch, use the cylinder at 40°C or less.

Stroke

Bore size (mm)	Standard stroke (mm)	Max. stroke (mm)	Min. stroke with two switches (mm)		Min. stroke with one switch (mm)	
			Reed switch	Proximity switch	Reed switch	Proximity switch
ø4	3/6	6	-	-	-	-
ø6	4/6/8	8	6	4(8)	4	4
ø8	4/6/8	8	8	4(8)	4	4
ø10	4/6/10	10	6	4(10)	4	4

*1: Products with stroke other than standard stroke are not available. *2: For F2Y, F3Y or F3P, the min. stroke will be the dimensions in ( ).

Switch specifications

Item	2-wire reed	2-wire proximity			3-wire proximity			
	FOH/FOV	F2H/F2V	F2S	F2YH/F2YV	F3H/F3V	F3S	F3PH/F3PV (Made to order)	F3YH/F3YV
Applications	Dedicated for programmable controller	Dedicated for programmable controller			For programmable controller, relay			
Output method	-	-			NPN output		PNP output	NPN output
Power supply voltage	-	-			10 to 28 VDC		4.5 to 28 VDC	10 to 28 VDC
Load voltage	24 VDC	10 to 30 VDC		24 VDC ±10%	30 VDC or less			
Load current	5 to 20 mA (*3)	5 to 20 mA (*3)			50 mA or less			
Indicator	Yellow LED (Lit when ON)	Yellow LED (Lit when ON)	LED (Lit when ON)	Red/green LED (Lit when ON)	Yellow LED (Lit when ON)	LED (Lit when ON)	Yellow LED (Lit when ON)	Red/green LED (Lit when ON)
Leakage current	1 mA or less	1 mA or less			10 μA or less			
Weight g	1 m:10 3 m:29							

*1: Refer to Ending Page 1 for detailed switch specifications and dimensions.
*2: Switches other than the above models, such as switches with connectors, are also available. Refer to Ending Page 1.
*3: The max. load current is 20 mA at 25°C. The current is lower than 20 mA if the operating ambient temperature around the switch is higher than 25˚C. (5 to 10 mA at 60°C)
*4: The F-switch uses a bend-resistant lead wire.

Cylinder weight table

(Unit: g)

Stroke (mm)	3		4		6		8		10		Weight per switch
Bore size (mm)	No switch	With switch	No switch	With switch	No switch	With switch	No switch	With switch	No switch	With switch	
ø4	6.4	-	-	-	7.3	-	-	-	-	-	-
ø6	-	-	11.4	13.1	12.4	14	13.4	15	-	-	10
ø8	-	-	16.1	18.2	17.4	19.5	18.7	20.8	-	-	10
ø10	-	-	21.4	23.3	22.6	24.5	-	-	25	26.9	10

Theoretical thrust table

(Unit: N)

Bore size (mm)	Operating direction	Working pressure MPa							
		0.1	0.15	0.2	0.3	0.4	0.5	0.6	0.7
ø4	Push	-	-	2.51	3.77	5.03	6.28	7.54	8.80
	Pull	-	-	1.88	2.83	3.77	4.71	5.65	6.60
ø6	Push	-	4.24	5.65	8.48	11.3	14.1	17.0	19.8
	Pull	-	2.36	3.14	4.71	6.28	7.85	9.42	11.0
ø8	Push	-	7.54	10.1	15.1	20.1	25.1	30.2	35.2
	Pull	-	4.59	6.13	9.19	12.3	15.3	18.4	21.4
ø10	Push	7.85	11.8	15.7	23.6	31.4	39.3	47.1	55.0
	Pull	5.03	7.54	10.1	15.1	20.1	25.1	30.2	35.2

How to order

● No switch (without magnet for switch)

MDC2 - 6 - 4

● With switch (built-in magnet for switch)

MDC2-L - 6 - 4 - F2V - R

Ⓐ Model No.
Ⓑ Bore size
Ⓒ Stroke
Ⓓ Switch model No. *1 *2 *3 *4
Ⓔ Switch quantity

Precautions for model No. selection

*1 : ø4 with switch is not available.
*2 : For MDC2 with reed switch, the cylinder cannot be mounted on a magnetic substance (iron plate, etc.). This could lead to switch detection malfunction.
*3 : When using MDC2-L-6 with reed switch, use a non-magnetic bolt (stainless steel hexagon socket head cap screw, etc.) for cylinder mounting bolt. Failure to do so could lead to switch detection malfunction.
*4 : Refer to page 1348 for the min. stroke with switch.

[Example of model No.]

MDC2-L-6-4-F2V-R

Model: Compact direct mounting cylinder
Ⓐ Model No. : Double acting/single rod/with switch
Ⓑ Bore size : ø6 mm
Ⓒ Stroke : 4 mm
Ⓓ Switch model No.: Proximity switch F2V, lead wire 1 m
Ⓔ Switch quantity: 1 on rod side

Code	Description	
Ⓐ Model No.		
MDC2	Double acting/single rod	No switch
MDC2-L	Double acting/single rod	With switch

Ⓑ Bore size	
4	ø4
6	ø6
8	ø8
10	ø10

Ⓒ Stroke (mm)	
3	3 (ø4)
4	4 (ø6 to ø10)
6	6 (ø4 to ø10)
8	8 (ø6, ø8)
10	10 (ø10)

Ⓓ Switch model No.

Axial lead wire	Radial lead wire	Contact	Voltage AC	Voltage DC	Indicator	Lead wire
F0H*	F0V*	Reed		●	1-color LED	2-wire
-	F2S*	Proximity		●		
F2H*	F2V*			●		
-	F3S*			●		3-wire
F3H*	F3V*			●		
F3PH*	F3PV*			●	1-color LED (PNP output) (custom)	
F2YH*	F2YV*			●	2-color LED	2-wire
F3YH*	F3YV*			●		3-wire

*** Lead wire length**	
Blank	1 m (standard)
3	3 m (option)

Ⓔ Switch quantity	
R	1 on rod side
H	1 on head side
D	2

How to order switch

SW - F0H

Switch model No. (Item Ⓓ above)

Clean-room specifications (Catalog No. CB-033SA)

● Anti-dust generation structure for use in cleanrooms

MDC2-.....- **P7***

MDC2-.....- **P5***

Specifications for rechargeable battery (Catalog No. CC-1226A)

● Design compatible with rechargeable battery manufacturing process

MDC2-.....- **P4***

SCP*3
CMK2
CMA2
SCM
SCG
SCA2
SCS2
CKV2
CAV2/COVP/N2
SSD2
SSG
SSD
CAT
MDC2
MVC
SMG
MSD/MSDG
FC*
STK
SRL3
SRG3
SRM3
SRT3
MRL2
MRG2
SM-25
ShkAbs
FJ
FK
Spd Contr
Ending

Internal structure and parts list

● MDC2-4 (double acting/single rod)

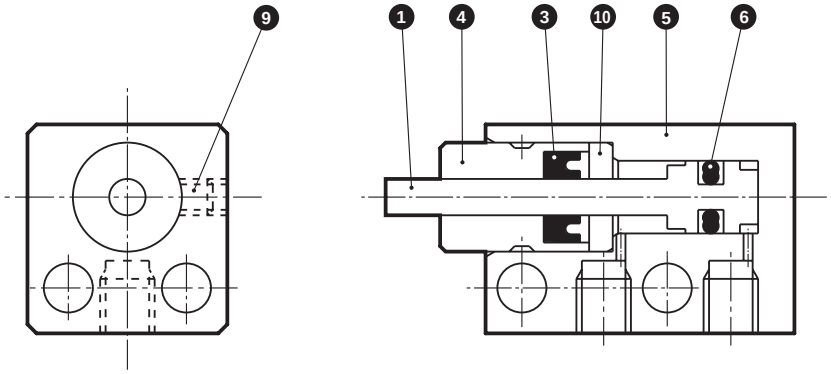

● MDC2-L-6, 8, 10 (double acting/single rod/with switch)

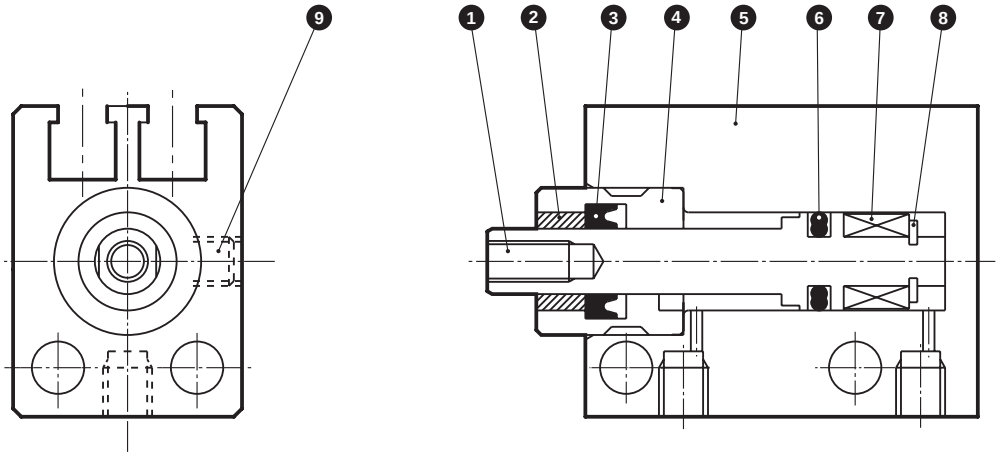

● MDC2-6,8,10 (double acting/single rod)

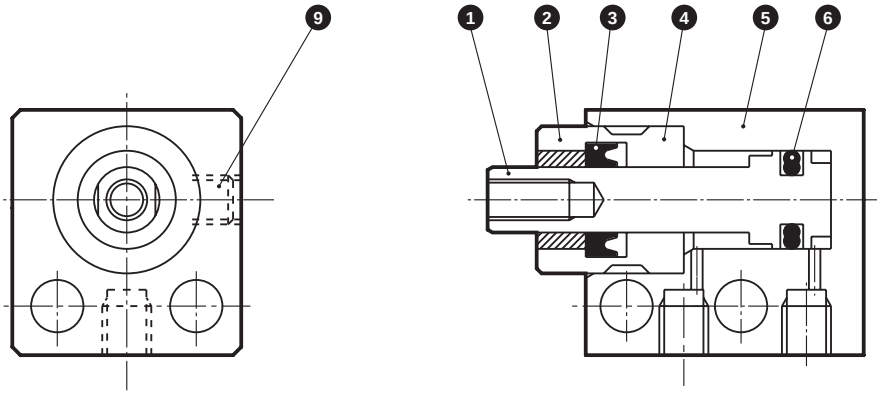

Cannot be disassembled

Part No.	Part name	Material	Remarks	Part No.	Part name	Material	Remarks
1	Piston	Stainless steel		6	Piston packing	Nitrile rubber	
2	Bush	Oil-impregnated brass		7	Magnet	Plastic	
3	Rod packing	Nitrile rubber		8	E type snap ring	Stainless steel	
4	Rod metal	ø4: Phosphor bronze ø6 to ø10: Stainless steel		9	Hexagon socket set screw	Stainless steel	
				10	Color	Stainless steel	
5	Cylinder body	Aluminum alloy	Hard alumite				

Dimensions

● MDC2-4-3,6 (double acting/single rod/without switch)

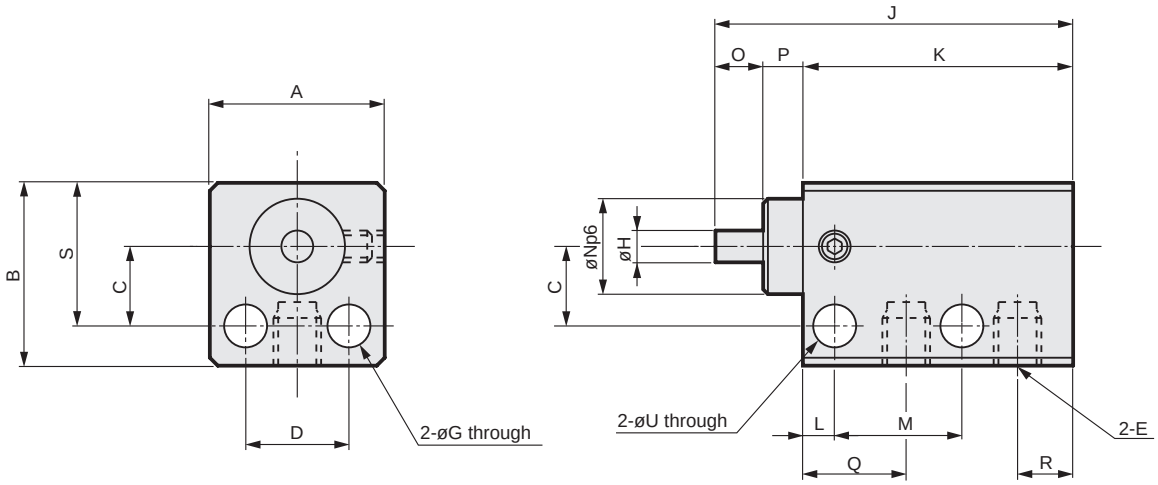

Model No.	A	B	C	D	E	G	H	J	K	L	M	N	O	P	Q	R	S	U
MDC2-4-3	11	11.5	5	6.5	M3	2.7	2	22.5	17	2	8	6	3	2.5	6.5	3.5	9	2.7
MDC2-4-6	11	11.5	5	6.5	M3	2.7	2	25.5	20	2	11	6	3	2.5	6.5	3.5	9	2.7

Note: Width and height dimensions of the body have positive tolerance. When used in parallel, pay attention to the position setting and to interference with external parts.

SCP*3
CMK2
CMA2
SCM
SCG
SCA2
SCS2
CKV2
CAV2/ COVP/N2
SSD2
SSG
SSD
CAT
MDC2
MVC
SMG
MSD/ MSDG
FC*
STK
SRL3
SRG3
SRM3
SRT3
MRL2
MRG2
SM-25
ShkAbs
FJ
FK
Spd Contr
Ending

Dimensions

● MDC2-6, 8, 10 (double acting/single rod/without switch)

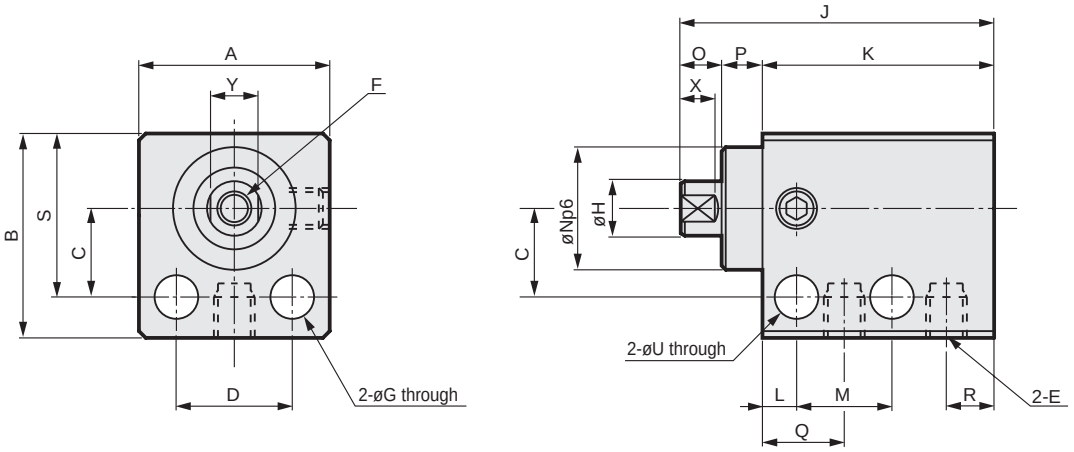

Model No.	Stroke	A	B	C	D	E	F	G	H	J	K	L	M	N	O	P	Q	R	S	U	X	Y
MDC2-6	4	14	15	6.5	8.5	M3	M 2.5 x 0.45 Depth 4	3.2	4	23	17	2.5	7.5	9	3	3	6	3.5	12	3.2	2.5	3.5
	6									25	19		9									
	8									27	21		11									
MDC2-8	4	16	17	7.5	10	M3	M3 x 0.5 Depth 5	3.2	5	23	17	2.5	7.5	11	3	3	6	3.5	14	3.2	2.5	4.5
	6									25	19		9									
	8									27	21		11									
MDC2-10	4	16	17.5	8	10	M5	M3 x 0.5 Depth 5	3.2	6	28	22	2.5	9.5	11	3	3	7	5	14.5	3.2	2.5	5
	6									30	24		11.5									
	10									34	28		15.5									

Note: Width and height dimensions of the body have positive tolerance. When used in parallel, pay attention to the position setting and to interference with external parts.

● MDC2-L-6, 8, 10 (double acting/single rod/with switch)

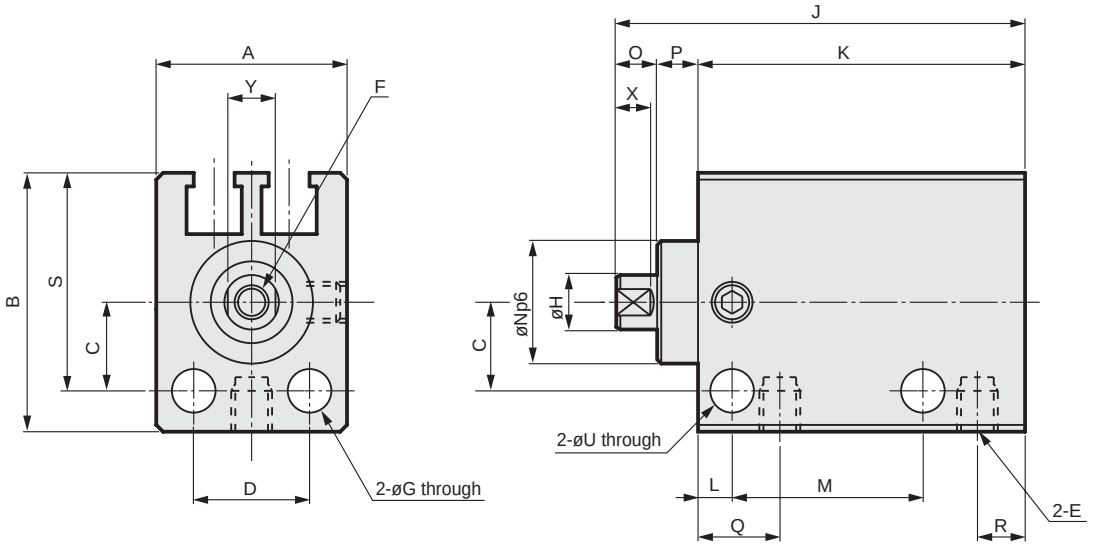

Note) Refer to page 1366 for switch mounting dimensions.

Model No.	Stroke	A	B	C	D	E	F	G	H	J	K	L	M	N	O	P	Q	R	S	U	X	Y
MDC2-L-6	4	14	19	6.5	8.5	M3	M 2.5 x 0.45 Depth 4	3.2	4	28	22	2.5	12.5	9	3	3	6	3.5	16	3.2	2.5	3.5
	6									30	24		14									
	8									32	26		16									
MDC2-L-8	4	16	22	7.5	10	M3	M3 x 0.5 Depth 5	3.2	5	28	22	2.5	12.5	11	3	3	6	3.5	18.5	3.2	2.5	4.5
	6									30	24		14									
	8									32	26		16									
MDC2-L-10	4	16	22	8	10	M5	M3 x 0.5 Depth 5	3.2	6	31	25	2.5	12.5	11	3	3	7	5	19	3.2	2.5	5
	6									33	27		14.5									
	10									37	31		18.5									

Note: Width and height dimensions of the body have positive tolerance. When used in parallel, pay attention to the position setting and to interference with external parts.

MEMO

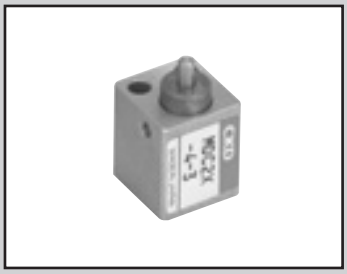

Compact direct mounting cylinder
Single acting/push single acting/pull

MDC2-X/Y Series

● Bore size: ø4, ø6, ø8, ø10

JIS symbol

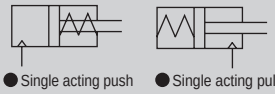

● Single acting push ● Single acting pull

RoHS CAD

Specifications

Item		MDC2-X MDC2-Y MDC2-XL (with switch) MDC2-YL (with switch)			
Bore size mm		ø4 *1	ø6	ø8	ø10
Actuation	MDC2-X(L)	Single acting push			
	MDC2-Y(L)	Single acting pull			
Working fluid		Compressed air			
Max. working pressure MPa		0.7			
Min. working pressure MPa	MDC2-X(L)	0.35	0.3		0.25
	MDC2-Y(L)	0.4		0.3	0.25
Proof pressure MPa		1.05			
Ambient temperature °C		-10 to 60 (no freezing) *2			
Port size		M3			M5
Stroke tolerance mm		+0.5 0			
Working piston speed mm/s		50 to 500			
Cushion		No			
Lubrication		Not required (use turbine oil class 1 ISO VG32 if necessary for lubrication)			
Allowable absorbed energy J		This product cannot absorb the energy generated by an external load mounted on the cylinder. When using the product with no load, separately provide a shock absorber on the outside.			

*1: ø4 is not available for MDC2-XL and MDC2-YL.
*2: When using the proximity switch, use the cylinder at 40°C or less.

Stroke

Bore size (mm)	Standard stroke (mm)	Max. stroke (mm)	Min. stroke with two switches (mm)		Min. stroke with one switch (mm)	
			Reed switch	Proximity switch	Reed switch	Proximity switch
ø4	3/6	6	-	-	-	-
ø6	4/6/8	8	6	4 (8)	4	4
ø8	4/6/8	8	8	4 (8)	4	4
ø10	4/6/10	10	6	4 (10)	4	4

*1: Products with stroke other than standard stroke are not available. *2: For F2Y, F3Y or F3P, the min. stroke will be the dimensions in ( ).

Switch specifications

Item	2-wire reed	2-wire proximity			3-wire proximity			
	FOH/FOV	F2H/F2V	F2S	F2YH/F2YV	F3H/F3V	F3S	F3PH/F3PV (Made to order)	F3YH/F3YV
Applications	Dedicated for programmable controller	Dedicated for programmable controller			For programmable controller, relay			
Output method	-	-			NPN output		PNP output	NPN output
Power supply voltage	-	-			10 to 28 VDC		4.5 to 28 VDC	10 to 28 VDC
Load voltage	24 VDC	10 to 30 VDC		24 VDC ±10%	30 VDC or less			
Load current	5 to 20 mA (*3)	5 to 20 mA (*3)			50 mA or less			
Indicator	Yellow LED (Lit when ON)	Yellow LED (Lit when ON)	LED (Lit when ON)	Red/green LED (Lit when ON)	Yellow LED (Lit when ON)	LED (Lit when ON)	Yellow LED (Lit when ON)	Red/green LED (Lit when ON)
Leakage current	1 mA or less	1 mA or less			10 μA or less			
Weight g	1 m: 10 3 m: 29							

*1: Refer to Ending Page 1 for detailed switch specifications and dimensions.
*2: Switches other than the above models, such as switches with connectors, are also available. Refer to Ending Page 1.
*3: The max. load current is 20 mA at 25°C. The current is lower than 20 mA if the operating ambient temperature around the switch is higher than 25˚C. (5 to 10 mA at 60°C)
*4: The F-switch uses a bend-resistant lead wire.

Cylinder weight table

(Unit: g)

Bore size (mm)	Model No. \ Stroke (mm)	3 No switch	3 With switch	4 No switch	4 With switch	6 No switch	6 With switch	8 No switch	8 With switch	10 No switch	10 With switch	Weight per switch
ø4	MDC2-X	4.9	-	-	-	6.9	-	-	-	-	-	-
	MDC2-Y	7.4	-	-	-	9.4	-	-	-	-	-	
ø6	MDC2-X	-	-	10.9	12.6	11.2	14.4	15.1	16.8	-	-	10
	MDC2-Y	-	-	13.3	15	15	16.7	17.5	19.2	-	-	
ø8	MDC2-X	-	-	16	18	18.4	20.5	20.7	22.8	-	-	10
	MDC2-Y	-	-	19	21	21.4	23.5	23.7	25.8	-	-	
ø10	MDC2-X	-	-	19.6	22	22	24.4	-	-	26.9	29.3	10
	MDC2-Y	-	-	21.2	23.4	23.6	25.8	-	-	28.5	30.7	

Spring load

(Unit: N)

Bore size (mm)	Stroke (mm)	Spring load Set	Spring load Operating
ø4	3/6	1.8	2.9
ø6	4/6/8	2.3	5.0
ø8	4/6/8	4.0	7.0
ø10	4/6/10	4.1	7.4

Theoretical thrust table

● MDC2-X

(Unit: N)

Bore size (mm)	Operating direction	Working pressure MPa 0.25	0.3	0.35	0.4	0.5	0.6	0.7
ø4	Push	-	-	1.50	2.13	3.38	4.64	5.90
	Pull	-	-	Refer to the spring load value.				
ø6	Push	-	3.48	4.90	6.31	9.1	12.0	14.8
	Pull	-	Refer to the spring load value.					
ø8	Push	-	8.08	10.6	13.1	18.1	23.2	28.2
	Pull	-	Refer to the spring load value.					
ø10	Push	12.2	16.2	20.1	24.0	31.9	39.7	47.6
	Pull	Refer to the spring load value.						

● MDC2-Y

(Unit: N)

Bore size (mm)	Operating direction	Working pressure MPa 0.25	0.3	0.35	0.4	0.5	0.6	0.7
ø4	Push	-	-	-	Refer to the spring load value.			
	Pull	-	-	-	0.87	1.81	2.75	3.70
ø6	Push	-	-	-	Refer to the spring load value.			
	Pull	-	-	-	1.28	2.85	4.42	6.0
ø8	Push	-	Refer to the spring load value.					
	Pull	-	2.19	3.72	5.25	8.3	11.4	14.4
ø10	Push	Refer to the spring load value.						
	Pull	5.17	7.68	10.2	12.7	17.7	22.8	27.8

How to order

● No switch (without magnet for switch)

MDC2-X - 6 - 4

● With switch (built-in magnet for switch)

MDC2-XL - 6 - 4 - F2V - R

Ⓐ Model No.

Ⓑ Bore size

Ⓒ Stroke

Ⓓ Switch model No. *1 *2 *3 *4

Ⓔ Switch quantity

Code	Description	
Ⓐ Model No.		
MDC2-X	Single acting/push	No switch
MDC2-Y	Single acting/pull	
MDC2-XL	Single acting/push	With switch
MDC2-YL	Single acting/pull	

Ⓑ Bore size	
4	ø4
6	ø6
8	ø8
10	ø10

Ⓒ Stroke (mm)	
3	3 (ø4)
4	4 (ø6 to ø10)
6	6 (ø4 to ø10)
8	8 (ø6, ø8)
10	10 (ø10)

Ⓓ Switch model No.

Axial lead wire	Radial lead wire	Contact	Voltage AC	Voltage DC	Indicator	Lead wire
F0H*	**F0V***	Reed		●	1-color LED	2-wire
-	**F2S***	Proximity		●		
F2H*	**F2V***			●		
-	**F3S***			●		3-wire
F3H*	**F3V***			●		
F3PH*	**F3PV***			●	1-color LED (PNP output) (Made to order)	
F2YH*	**F2YV***			●	2-color LED	2-wire
F3YH*	**F3YV***			●		3-wire

*** Lead wire length**	
Blank	1 m (standard)
3	3 m (option)

Ⓔ Switch quantity	
R	1 on rod side
H	1 on head side
D	2

⚠ Precautions for model No. selection

*1 : ø4 with switch is not available.
*2 : For MDC2 with reed switch, the cylinder cannot be mounted on a magnetic substance (iron plate, etc.). This could lead to switch detection malfunction.
*3 : When using MDC2-XL or YL-6 with reed switch, use the non-magnetic bolt (stainless steel hexagon socket head cap screw, etc.) for cylinder mounting bolt.

[Example of model No.]

MDC2-XL-6-4-F2V-R

Model: Compact direct mounting cylinder

Ⓐ Model No. : Single acting/push/with switch
Ⓑ Bore size : ø6 mm
Ⓒ Stroke : 4 mm
Ⓓ Switch model No.: Proximity switch F2V, lead wire 1 m
Ⓔ Switch quantity : 1 on rod side

How to order switch

SW - F0H

Switch model No.
(Item Ⓓ above)

Internal structure and parts list

● MDC2-X-4 (single acting/push)

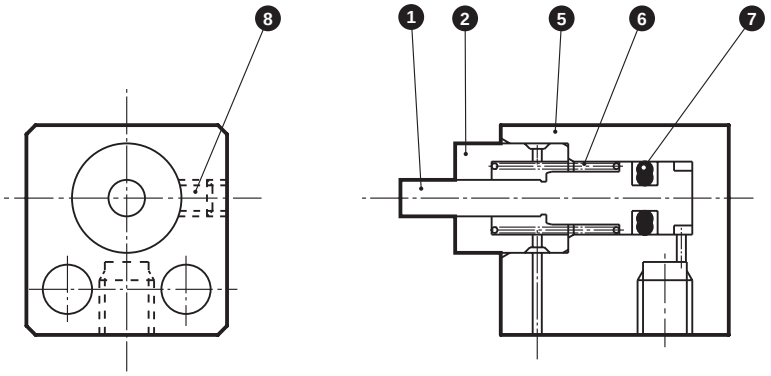

● MDC2-Y-4 (single acting/pull)

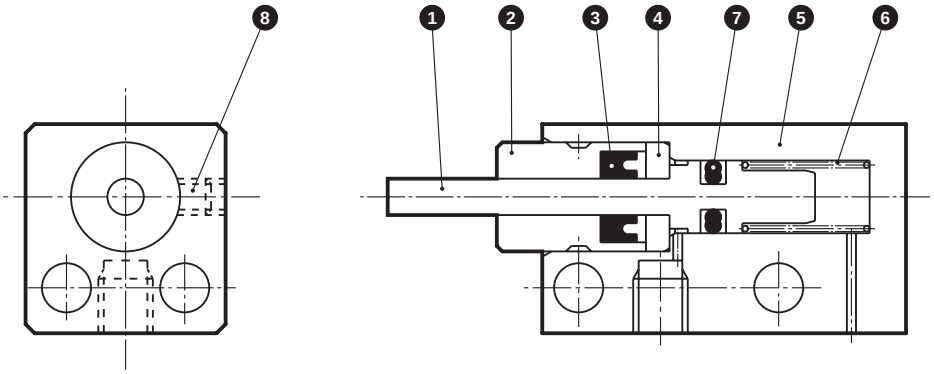

Cannot be disassembled

No.	Part name	Material	Remarks	No.	Part name	Material	Remarks
1	Piston	Stainless steel		5	Cylinder body	Aluminum alloy	Hard alumite
2	Rod metal	Phosphor bronze		6	Coil spring	Steel	Electrodeposition
3	Rod packing	Nitrile rubber		7	Piston packing	Nitrile rubber	
4	Collar	Stainless steel		8	Hexagon socket set screw	Stainless steel	

SCP*3
CMK2
CMA2
SCM
SCG
SCA2
SCS2
CKV2
CAV2/COVP/N2
SSD2
SSG
SSD
CAT
MDC2
MVC
SMG
MSD/MSDG
FC*
STK
SRL3
SRG3
SRM3
SRT3
MRL2
MRG2
SM-25
ShkAbs
FJ
FK
Spd Contr
Ending

Internal structure and parts list

● MDC2-XL-6, 8, 10 (single acting/push/with switch)

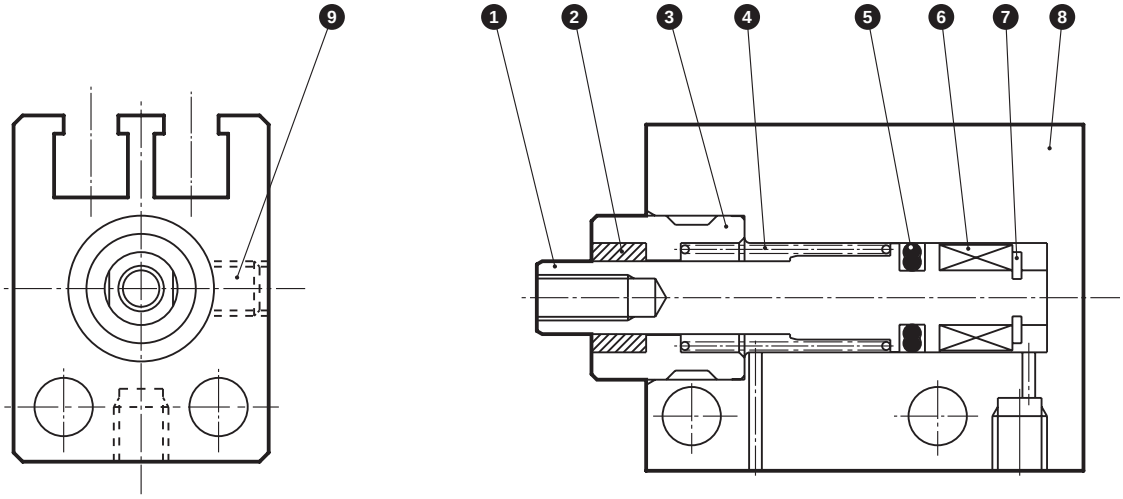

● MDC2-X-6, 8, 10 (single acting/push)

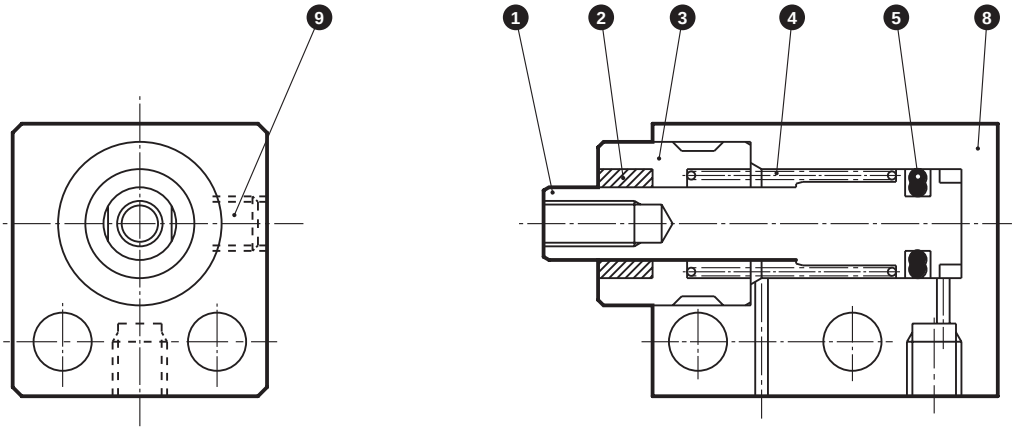

Cannot be disassembled

No.	Part name	Material	Remarks	No.	Part name	Material	Remarks
1	Piston	Stainless steel		6	Magnet	Plastic	
2	Bush	Oil-impregnated copper alloy		7	E snap ring	Stainless steel	
3	Rod metal	Stainless steel		8	Cylinder body	Aluminum alloy	Hard alumite
4	Coil spring	Steel	Electrodeposition	9	Hexagon socket set screw	Stainless steel	
5	Piston packing	Nitrile rubber					

Internal structure and parts list

● MDC2-YL-6, 8, 10 (single acting/pull/with switch)

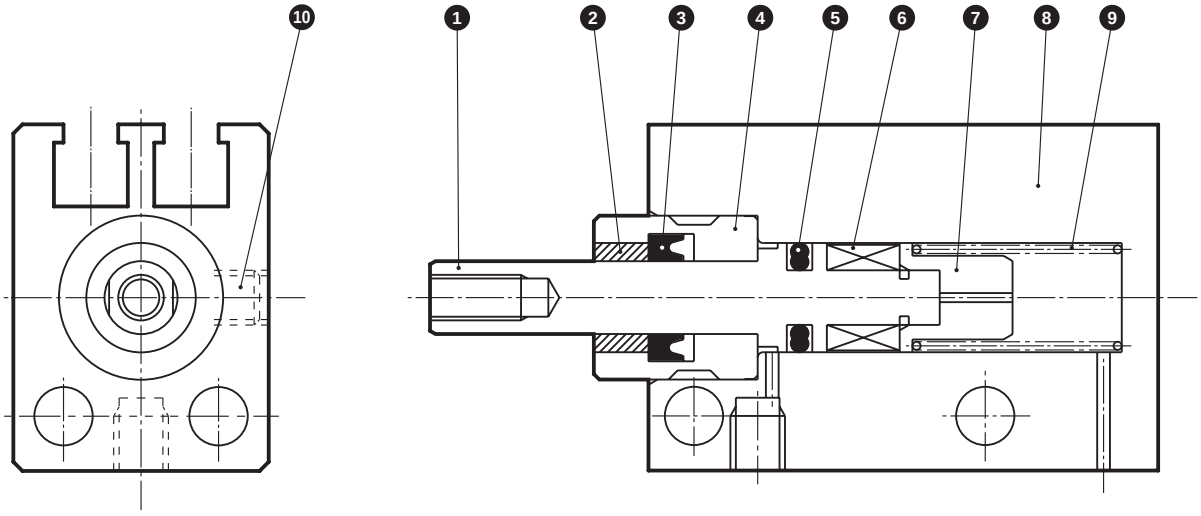

● MDC2-Y-6, 8, 10 (single acting/pull)

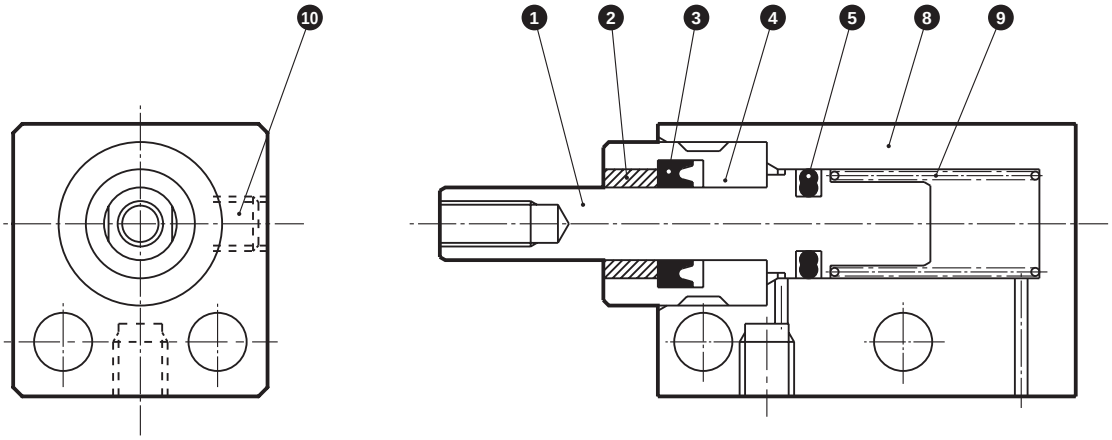

Cannot be disassembled

No.	Part name	Material	Remarks	No.	Part name	Material	Remarks
1	Piston	Stainless steel		6	Magnet	Plastic	
2	Bush	Oil-impregnated copper alloy		7	Spring holder	Stainless steel	
3	Rod packing	Nitrile rubber		8	Cylinder body	Aluminum alloy	Hard alumite
4	Rod metal	Stainless steel		9	Coil spring	Steel	Electrodeposition
5	Piston packing	Nitrile rubber		10	Hexagon socket set screw	Stainless steel	

SCP*3
CMK2
CMA2
SCM
SCG
SCA2
SCS2
CKV2
CAV2/ COVP/N2
SSD2
SSG
SSD
CAT
MDC2
MVC
SMG
MSD/ MSDG
FC*
STK
SRL3
SRG3
SRM3
SRT3
MRL2
MRG2
SM-25
ShkAbs
FJ
FK
Spd Contr
Ending

Dimensions

● MDC2-X-4-3 (single acting/push)

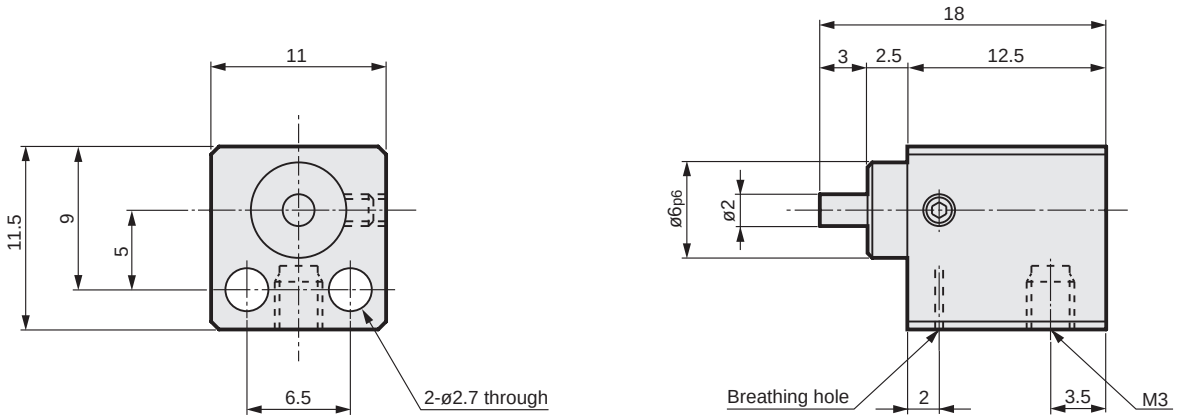

Note: Width and height dimensions of the body have positive tolerance. When used in parallel, pay attention to the position setting and to interference with external parts.

● MDC2-X-4-6 (single acting/push)

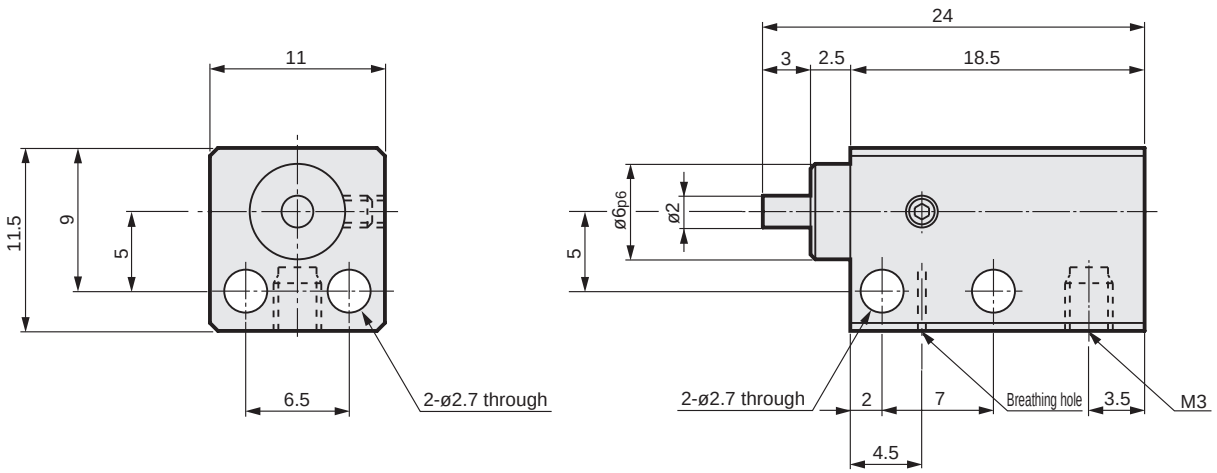

Note: Width and height dimensions of the body have positive tolerance. When used in parallel, pay attention to the position setting and to interference with external parts.

Dimensions

● MDC2-X-6, 8, 10 (single acting/push/without switch)

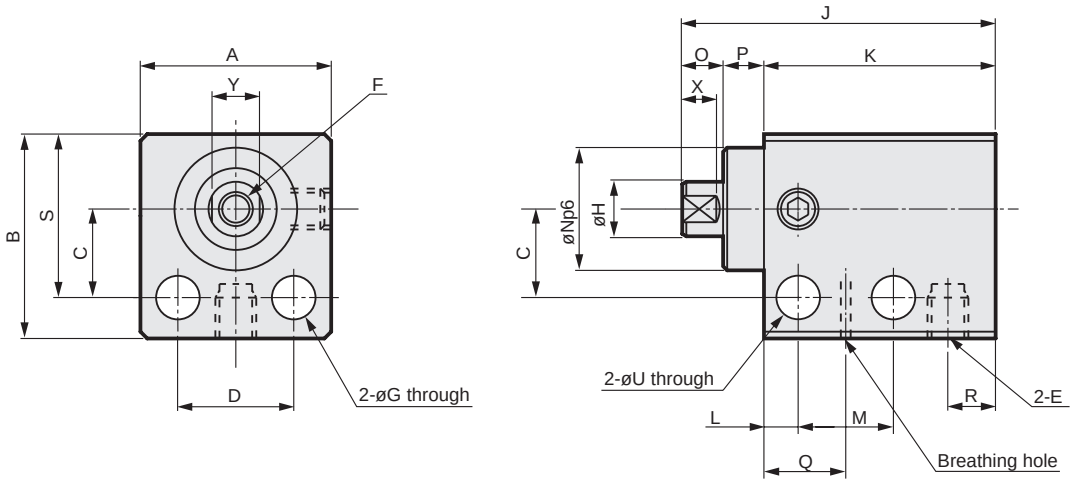

Model No.	Stroke	A	B	C	D	E	F	G	H	J	K	L	M	N	O	P	Q	R	S	U	X	Y
MDC2-X-6	4	14	15	6.5	8.5	M3	M2.5x0.45 Depth 4	3.2	4	22	16	2.5	6.5	9	3	3	6	3.5	12	3.2	2.5	3.5
	6									25	19		8.5									
	8									29	23		10.5									
MDC2-X-8	4	16	17	7.5	10	M3	M3x 0.5 Depth 5	3.2	5	23	17	2.5	7.5	11	3	3	7	3.5	14	3.2	2.5	4.5
	6									26	20		9									
	8									29	23		11									
MDC2-X-10	4	16	17.5	8	10	M5	M3x 0.5 Depth 5	3.2	6	26	20	2.5	7.5	11	3	3	7.5	5	14.5	3.2	2.5	5
	6									29	23		9.5									
	10									35	29		13.5									

Note: Width and height dimensions of the body have positive tolerance. When used in parallel, pay attention to the position setting and to interference with external parts.

● MDC2-XL-6, 8, 10 (single acting/push/with switch)

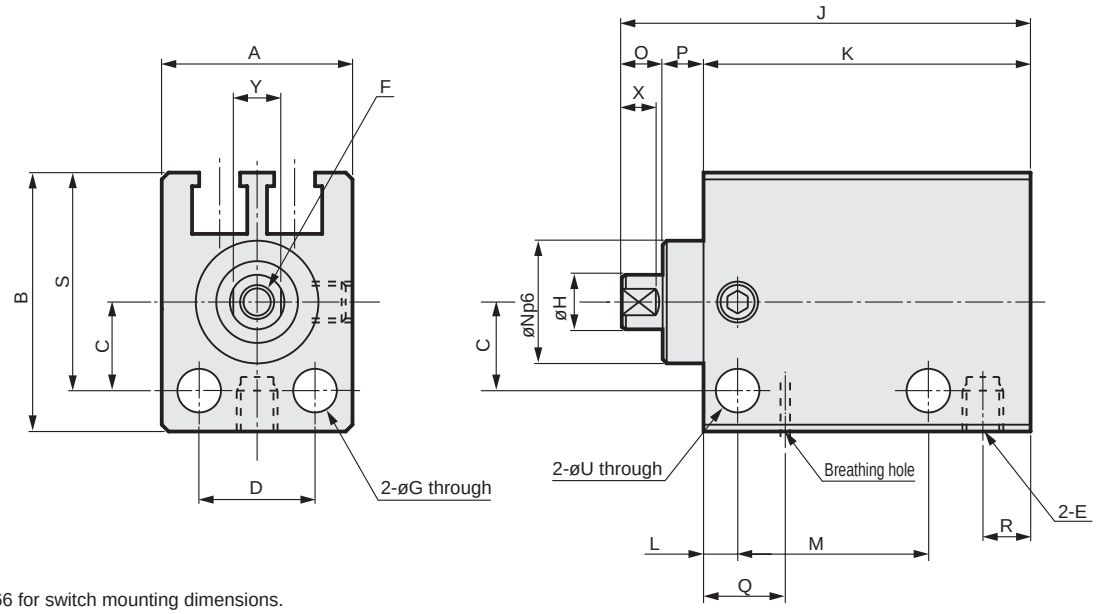

Note) Refer to page 1366 for switch mounting dimensions.

Model No.	Stroke	A	B	C	D	E	F	G	H	J	K	L	M	N	O	P	Q	R	S	U	X	Y
MDC2-XL-6	4	14	19	6.5	8.5	M3	M2.5x0.45 Depth 4	3.2	4	27	21	2.5	11.5	9	3	3	6	3.5	16	3.2	2.5	3.5
	6									30	24		13.5									
	8									34	28		15.5									
MDC2-XL-8	4	16	22	7.5	10	M3	M3x 0.5 Depth 5	3.2	5	28	22	2.5	12.5	11	3	3	7	3.5	18.5	3.2	2.5	4.5
	6									31	25		14									
	8									34	28		16									
MDC2-XL-10	4	16	22	8	10	M5	M3x 0.5 Depth 5	3.2	6	31	25	2.5	12.5	11	3	3	7.5	5	19	3.2	2.5	5
	6									34	28		14.5									
	10									40	34		18.5									

Note: Width and height dimensions of the body have positive tolerance. When used in parallel, pay attention to the position setting and to interference with external parts.

SCP*3
CMK2
CMA2
SCM
SCG
SCA2
SCS2
CKV2
CAV2/COVP/N2
SSD2
SSG
SSD
CAT
MDC2
MVC
SMG
MSD/MSDG
FC*
STK
SRL3
SRG3
SRM3
SRT3
MRL2
MRG2
SM-25
ShkAbs
FJ
FK
Spd Contr
Ending

Dimensions

● MDC2-Y-4-3, 6 (single acting/pull)

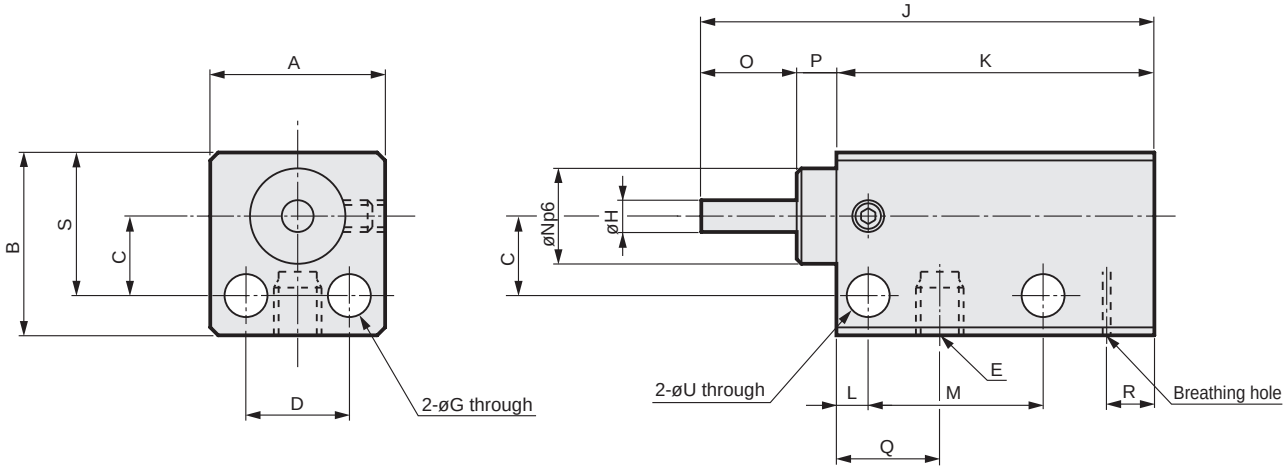

Model No.	A	B	C	D	E	G	H	J	K	L	M	N	O	P	Q	R	S	U
MDC2-Y-4-3	11	11.5	5	6.5	M3	2.7	2	28.5	20	2	11	6	6	2.5	6.5	3.5	9	2.7
MDC2-Y-4-6	11	11.5	5	6.5	M3	2.7	2	37.5	26	2	14	6	9	2.5	6.5	3.5	9	2.7

Note: Width and height dimensions of the body have positive tolerance. When used in parallel, pay attention to the position setting and to interference with external parts.

Dimensions

● MDC2-Y-6,8,10 (single acting/pull/without switch)

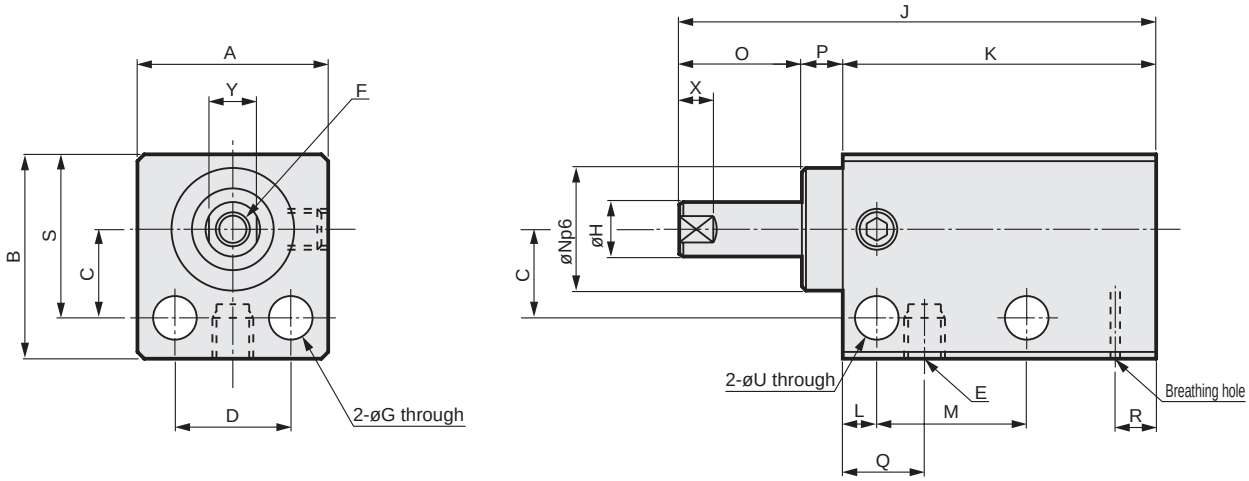

Model No.	Stroke	A	B	C	D	E	F	G	H	J	K	L	M	N	O	P	Q	R	S	U	X	Y
MDC2-Y-6	4	14	15	6.5	8.5	M3	M2.5x 0.45 Depth 4	3.2	4	30	20	2.5	9	9	7	3	6	3	12	3.2	2.5	3.5
	6									35	23		11		9							
	8									41	27		13		11							
MDC2-Y-8	4	16	17	7.5	10	M3	M3x 0.5 Depth 5	3.2	5	31	21	2.5	9.5	11	7	3	6	3	14	3.2	2.5	4.5
	6									36	24		11.5		9							
	8									41	27		13.5		11							
MDC2-Y-10	4	16	17.5	8	10	M5	M3x 0.5 Depth 5	3.2	6	32	22	2.5	9.5	11	7	3	7	3.5	14.5	3.2	2.5	5
	6									37	25		11.5		9							
	10									47	31		15.5		13							

Note: Width and height dimensions of the body have positive tolerance. When used in parallel, pay attention to the position setting and to interference with external parts.

● MDC2-YL-6, 8, 10 (single acting/pull/with switch)

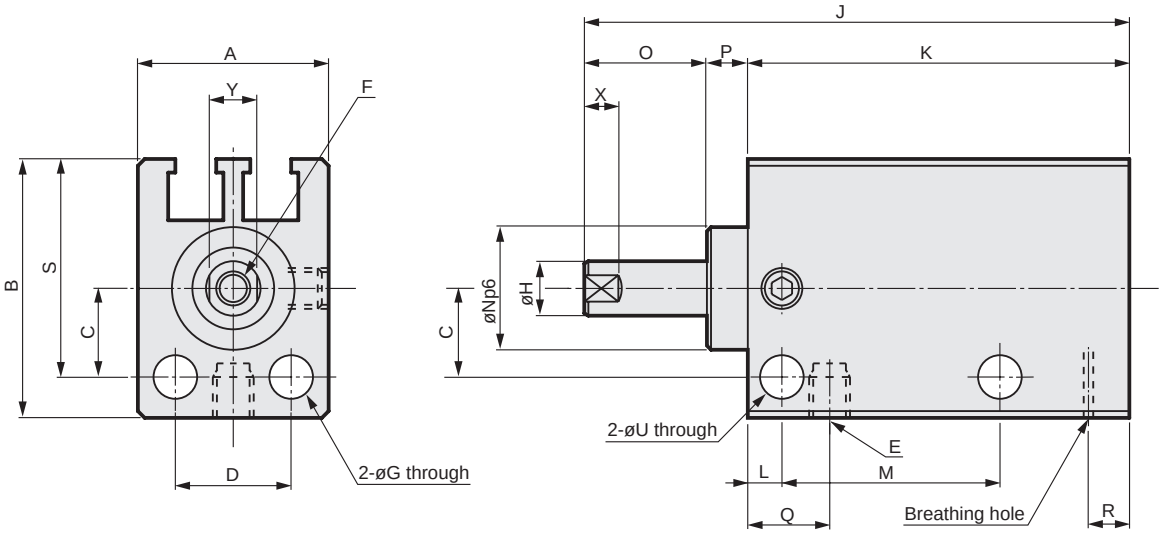

Note) Refer to page 1366 for switch mounting dimensions.

Model No.	Stroke	A	B	C	D	E	F	G	H	J	K	L	M	N	O	P	Q	R	S	U	X	Y
MDC2-YL-6	4	14	19	6.5	8.5	M3	M2.5x 0.45 Depth 4	3.2	4	35	25	2.5	14	9	7	3	6	3	16	3.2	2.5	3.5
	6									40	28		16		9							
	8									46	32		18		11							
MDC2-YL-8	4	16	22	7.5	10	M3	M3x 0.5 Depth 5	3.2	5	36	26	2.5	14.5	11	7	3	6	3	18.5	3.2	2.5	4.5
	6									41	29		16.5		9							
	8									46	32		18.5		11							
MDC2-YL-10	4	16	22	8	10	M5	M3x 0.5 Depth 5	3.2	6	36	26	2.5	13.5	11	7	3	7	3.5	19	3.2	2.5	5
	6									41	29		15.5		9							
	10									51	35		19.5		13							

Note: Width and height dimensions of the body have positive tolerance. When used in parallel, pay attention to the position setting and to interference with external parts.

Compact direct mounting cylinder double acting/fine speed

MDC2-F Series

● Bore size ø6, ø8, ø10

JIS symbol

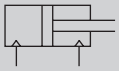

● Double acting

RoHS CAD

Specifications

Item	MDC2-F/ MDC2-LF (with switch)		
Bore size mm	ø6	ø8	ø10
Actuation	Double acting		
Working fluid	Compressed air		
Max. working pressure MPa	0.7 (≈100 psi, 7 bar)		
Min. working pressure MPa	0.15 (≈22 psi, 1.5 bar)		0.1 (≈15 psi, 1 bar)
Proof pressure MPa	1.05 (≈150 psi, 10.5 bar)		
Ambient temperature °C	5 (41°F) to 60 (140°F) *1		
Port size	M3		M5
Stroke tolerance mm	+0.5 0		
Working piston speed mm/s	1 to 200		
Cushion	None		
Lubrication	Lubrication not possible		
Allowable absorbed energy J	This product cannot absorb the energy generated by an external load mounted on the cylinder. When using the product with no load, separately provide a shock absorber on the outside.		

*1: 40°C when proximity switch is provided.

Stroke

Model No.	Bore size (mm)	Standard stroke (mm)	Max. stroke (mm)	Min. stroke with two switches (mm)		Min. stroke with one switch (mm)	
				Reed switch	Proximity switch	Reed switch	Proximity switch
MDC2-F MDC2-LF	ø6	4/6/8	8	6	4(8)	4	4
	ø8	4/6/8	8	8	4(8)	4	4
	ø10	4/6/10	10	6	4(10)	4	4

*1: Products with stroke other than standard stroke are not available.
*2: For F2Y, F3Y or F3P, the min. stroke will be the dimensions in ( ).

Switch specifications

Item	2-wire reed	2-wire proximity			3-wire proximity			
	FOH/FOV	F2H/F2V	F2S	F2YH/F2YV	F3H/F3V	F3S	F3PH/F3PV (Made to order)	F3YH/F3YV
Applications	Dedicated for programmable controller	Dedicated for programmable controller			For programmable controller, relay			
Output method	-	-			NPN output		PNP output	NPN output
Power supply voltage	-	-			10 to 28 VDC		4.5 to 28 VDC	10 to 28 VDC
Load voltage	24 VDC	10 to 30 VDC		24 VDC ±10%	30 VDC or less			
Load current	5 to 20 mA (*3)	5 to 20 mA (*3)			50 mA or less			
Indicator	Yellow LED (Lit when ON)	Yellow LED (Lit when ON)	LED (Lit when ON)	Red/green LED (Lit when ON)	Yellow LED (Lit when ON)	LED (Lit when ON)	Yellow LED (Lit when ON)	Red/green LED (Lit when ON)
Leakage current	1 mA or less	1 mA or less			10 μA or less			
Weight g	1 m:10 3 m:29							

*1: Refer to Ending Page 1 for detailed switch specifications and dimensions.
*2: Switches other than the above models, such as switches with connectors, are also available. Refer to Ending Page 1.
*3: The max. load current is 20 mA at 25°C. The current is lower than 20 mA if the operating ambient temperature around the switch is higher than 25˚C. (5 to 10 mA at 60°C)
*4: The F-switch uses a bend-resistant lead wire.

Clean-room specifications

(Catalog No. CB-033SA)

● Anti-dust generation structure for use in cleanrooms

MDC2-F **P7***

Theoretical thrust table

(Unit: N)

Bore size (mm)	Operating direction	Working pressure MPa 0.1	0.15	0.2	0.3	0.4	0.5	0.6	0.7
ø6	Push	-	4.24	5.65	8.48	11.3	14.1	17.0	19.8
	Pull	-	2.36	3.14	4.71	6.28	7.85	9.42	11.0
ø8	Push	-	7.54	10.1	15.1	20.1	25.1	30.2	35.2
	Pull	-	4.59	6.13	9.19	12.3	15.3	18.4	21.4
ø10	Push	7.85	11.8	15.7	23.6	31.4	39.3	47.1	55.0
	Pull	5.03	7.54	10.1	15.1	20.1	25.1	30.2	35.2

How to order

● No switch (without magnet for switch)

MDC2-F - 6 - 4

● With switch (built-in magnet for switch)

MDC2-LF - 6 - 4 - F2V - R

Ⓐ Bore size

Ⓑ Stroke

Ⓒ Switch model No. *1 *2 *3

Ⓓ Switch quantity

Code	Description
Ⓐ Bore size	
6	ø6
8	ø8
10	ø10

Ⓑ Stroke (mm)

Bore size		ø6	ø8	ø10
4	4	●	●	●
6	6	●	●	●
8	8	●	●	—
10	10	—	—	●

Ⓒ Switch model No.

Axial lead wire	Radial lead wire	Contact	Voltage AC	Voltage DC	Indicator	Lead wire
F0H*	**F0V***	Reed		●	1-color LED	2-wire
-	**F2S***	Proximity		●		
F2H*	**F2V***			●		
-	**F3S***			●		3-wire
F3H*	**F3V***			●		
F3PH*	**F3PV***			●	1-color LED (PNP output) (Made to order)	
F2YH*	**F2YV***			●	2-color LED	2-wire
F3YH*	**F3YV***			●		3-wire

*** Lead wire length**	
Blank	1 m (standard)
3	3 m (option)

Ⓓ Switch quantity	
R	1 on rod side
H	1 on head side
D	2

⚠ Precautions for model selection

*1 : When using MDC2 with reed switch, the cylinder cannot be mounted on a magnetic substance (iron sheet, etc.). This could lead to switch detection malfunction.

*2 : When using MDC2-LF-6 with reed switch, use a non-magnetic bolt (stainless steel hexagon socket head cap screw, etc.) for cylinder mounting bolt. Failure to do so could lead to switch detection malfunction

*3 : Refer to page 1364 for the min. stroke with switch.

[Example of model No.]

MDC2-LF-6-4-F2V-R

Model: Compact direct mounting cylinder, fine speed

Ⓐ Bore size : ø6 mm
Ⓑ Stroke : 4 mm
Ⓒ Switch model No.: Proximity switch F2V, lead wire 1 m
Ⓓ Switch quantity : 1 on rod side

How to order switch

SW - F0H

Switch model No. (Item Ⓒ above)

Dimensions

Same as MDC2 Series (double acting/single rod). Refer to page 1352.

SCP*3
CMK2
CMA2
SCM
SCG
SCA2
SCS2
CKV2
CAV2/COVP/N2
SSD2
SSG
SSD
CAT
MDC2
MVC
SMG
MSD/MSDG
FC*
STK
SRL3
SRG3
SRM3
SRT3
MRL2
MRG2
SM-25
ShkAbs
FJ
FK
Spd Contr
Ending

Switch installation dimensions

● Switch mounting position

Reed switch (F0)		Proximity switch F2S, F3S	Proximity switch(F2, F3, F2Y, F3Y, F3P)	
Axial lead wire (H)	L-shaped lead wire (V)		Axial lead wire (H)	L-shaped lead wire (V)

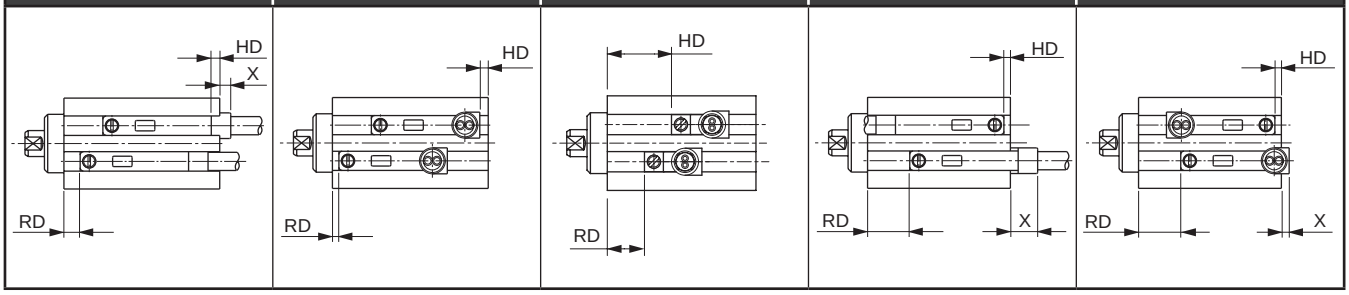

● Switch installation dimensions

• Reed switch (mm)

Switch mounting method		F0 V/H								
		RD			HD			X (*2)		
Bore size (mm)	Actuation	Stroke (mm)			Stroke (mm)			Stroke (mm)		
		4	6	8(10)	4	6	8(10)	4	6	8(10)
ø6	Double acting	1	1	1	-0.5	0	0	3.5 / 0.5	3 / -	3 / -
	Single acting push (X)	0	1	3	-1	0	0	4 / 1	3 / -	3 / -
	Single acting pull (Y)	2.5	2.5	2.5	1.5	2.5	4.5	1.5 / -	0.5 / -	- / -
ø8	Double acting	1	1	1	-1.5	0	0	4.5 / 1.5	3 / -	3 / -
	Single acting push (X)	1	2	3	-1.5	0	0	4.5 / 1.5	3 / -	3 / -
	Single acting pull (Y)	2.5	2.5	2.5	2.5	3.5	4.5	0.5 / -	- / -	- / -
ø10	Double acting	3.5	3.5	3.5	0.5	0.5	0.5	2.5 / -	2.5 / -	2.5 / -
	Single acting push (X)	4	5	7	0	0	0	3 / -	3 / -	3 / -
	Single acting pull (Y)	3.5	3.5	3.5	1.5	2.5	4.5	1.5 / -	0.5 / -	- / -

• Proximity switch (mm)

Switch mounting method		F2S, F3S						F2V/H F3V/H F2YV/H F3YV/H F3PV/H											
		RD			HD			RD			HD			X1 (*2, *3)			X2 (*2, *3)		
Bore size (mm)	Actuation	Stroke (mm)			Stroke (mm)			Stroke (mm)			Stroke (mm)			Stroke (mm)			Stroke (mm)		
		4	6	8(10)	4	6	8(10)	4	6	8(10)	4	6	8(10)	4	6	8(10)	4	6	8(10)
ø6	Double acting	5.5	5.5	5.5	9.5	11.5	13.5	6.5	6.5	6.5	1	1	1	4.2 / 1.2	2.2 / -	0.2 / -	8.7 / 5.7	6.7 / 3.7	4.7 / 1.7
	Single acting push (X)	5	6	8	9	12	16	6	7	9	0.5	0.5	0.5	4.7 / 1.7	2.7 / -	0.7 / -	9.2 / 3.2	6.2 / 0.2	5.2 / -
	Single acting pull (Y)	5.5	5.5	5.5	9.5	11.5	13.5	6.5	6.5	6.5	4	5	7	1.7 / -	- / -	- / -	5.7 / 3.2	2.7 / 0.2	- / -
ø8	Double acting	5.5	5.5	5.5	9.5	11.5	13.5	6.5	6.5	6.5	1	1	1	4.2 / 1.2	2.2 / -	0.2 / -	8.7 / 5.7	6.7 / 3.7	4.7 / 1.7
	Single acting push (X)	5.5	6.5	7.5	9.5	12.5	15.5	6.5	7.5	8.5	1	1	1	4.2 / 1.2	2.2 / -	0.2 / -	8.7 / 5.7	6.7 / 3.7	4.7 / 1.7
	Single acting pull (Y)	5.5	5.5	5.5	9.5	11.5	13.5	6.5	6.5	6.5	5	6	7	0.2 / -	- / -	- / -	4.7 / 1.7	1.7 / -	- / -
ø10	Double acting	7	7	7	11	13	17	8	8	8	2.5	2.5	2.5	2.7 / -	0.7 / -	- / -	7.2 / 4.2	5.2 / 2.2	1.2 / -
	Single acting push (X)	7.5	8.5	10.5	11.5	14.5	20.5	8.5	9.5	11.5	2	2	2	3.2 / 0.2	1.2 / -	- / -	7.7 / 4.7	5.7 / 2.7	1.7 / -
	Single acting pull (Y)	7	7	7	11	13	17	8	8	8	3.5	4.5	6.5	1.7 / -	- / -	- / -	6.2 / 3.2	3.2 / 0.2	- / -

*1: Min. stroke with two switches is as shown in the table below.
*2: X dimension indicates the protruding dimension from the end surface of the switch body. The upper column indicates X dimension when axial lead wire is used and the lower column indicates X dimension when L-shaped lead wire is used.*3: X1 indicates dimensions for F2 H/V, or F3 H/V, and X2 indicates dimensions for F2Y V/H, F3Y V/H, or F3P H/V.

Min. stroke (with 2 switches) (mm)

Bore size (mm)	Reed switch	Proximity switch
ø6	6	4 (8)
ø8	8	4 (8)
ø10	6	4 (10)

Note: For F2Y, F3Y or F3P, the min. stroke is the dimensions in ( ).

MEMO

Pneumatic components

Safety Precautions

Be sure to read this section before use.

Refer to Intro Page 73 for general information of the cylinder, and to Intro Page 80 for general information of the cylinder switch.

Product-specific cautions: Small direct mounting cylinder MDC2 Series

Design/selection

1. Common

CAUTION

■ When using MDC2 with reed switch, the cylinder cannot be mounted on a magnetic substance (iron plate, etc.).

■ For MDC2 with proximity switch, use the cylinder at ambient temperature of 40°C or less. Failure to do so could lead to switch detection malfunction.

2. Single acting MDC2-X/Y

CAUTION

■ Do not leave the single acting cylinder pressurized. If it is left pressurized for long periods, the piston rod may not return due to spring load when the pressure is released.

■ Take care when mounting so as not to block the breathing hole provided on the body.

● Otherwise, malfunctions may result.

3. Fine speed MDC2-F

CAUTION

■ Use without lubrication.

● Applying lubrication may cause changes in characteristics.

■ Assemble the speed controller near the cylinder.

● When installed far from the cylinder, the speed becomes unstable.

● Use the SC-M3/M5-F, SC3W, SCD-M3/M5-F Series speed controller.

■ In general, the speed is stabler at higher air pressure and lower load factor.

● Use at a 50% or less load factor.

■ Stable speed control is achieved with a meter-out circuit.

● When fine speed activation is performed with operating direction PUSH for the single rod cylinder, the popping out phenomenon occurs when operation starts if the load resistance is low. For countermeasures, use the ⓑ, ⓒ or ⓓcircuit. Note that circuit ⓓ is the most stable.

ⓐ

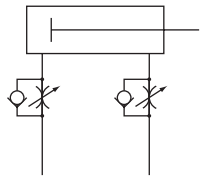

PUSH: Meter-out
PULL : Meter-out

ⓑ

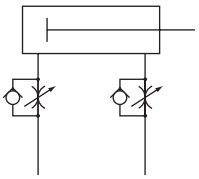

PUSH: Meter-in
PULL : Meter-in

ⓒ

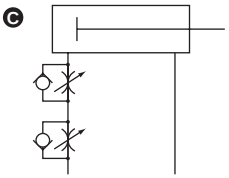

PUSH: Meter-in
PULL : Meter-out

ⓓ

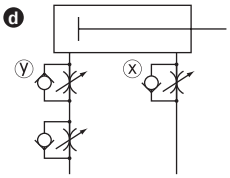

PUSH: Meter in/out
PULL : Meter-out

Speed adjustment method for PUSH operation of ⓓ circuit:

1. Set the speed with the speed controller x.
2. Restrict the speed with the speed controller y until there is no popping out.
3. Check the speed again.

(*1) When comparing ⓑ, ⓒ and ⓓ, the ⓓ circuit is the most stable.

(*2) For vertical mounting, combine the cylinder with a meter-out circuit, as it will fall under its own weight when a meter-in circuit is used.

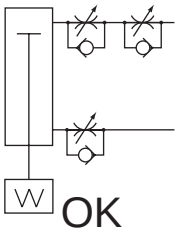

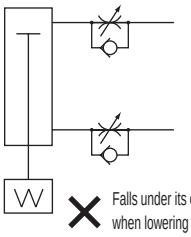

(*3) Use the circuit shown in the figure below for the serial connection of the speed controllers.

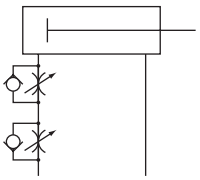

OK

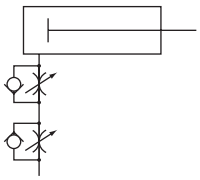

✕ Speed control is unstable

(Guidelines for pop-out generation)
Popping out occurs in the following cases.
· Thrust > Resistance

* Resistance: Thrust caused by residual pressure on the exhaust side (in the fine speed, suction pressure = residual pressure) + { When using horizontally: frictional force caused by load / When using vertically: load self-weight

■ Do not apply a lateral load to the cylinder.

● With a lateral load, operation will become unstable.

■ Avoid using this product where vibration is present.

● The product will be adversely affected by vibration and operation will become unstable.

Mounting, installation and adjustment

1. Common

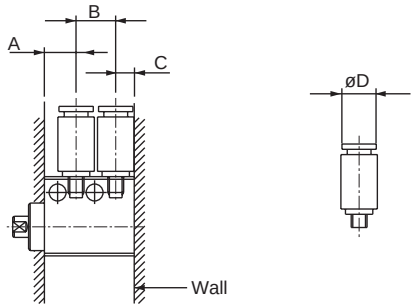

⚠ CAUTION

■ As compatible piping fittings are limited, refer to the table below to select the fitting.

Item		Port position dimensions (mm)				With wall			Without wall		
Bore size (mm)	Port size	Stroke mm	A	B	C	Applicable fittings	Fitting O.D. øD	Inapplicable fittings	Applicable fittings	Fitting O.D. øD	Inapplicable fittings
ø4	M3	3	6.5	7	3.5	GWS3-M3-S FTS4-M3	ø7 or less	GWS4-M3-S SC3W-M3-3 SC3W-M3-4 SC3U-M3-3 SC3U-M3-4	GWS3-M3-S FTS4-M3	ø7 or less	GWS4-M3-S SC3W-M3-3 SC3W-M3-4 SC3U-M3-3 SC3U-M3-4
		6	6.5	10	3.5				GWS3-M3-S GWS4-M3-S FTS4-M3 SC3W-M3-* SC3U-M3-*	ø10 or less	
ø6	M3	4	6	7.5	3.5	GWS3-M3-S FTS4-M3	ø7 or less	GWS4-M3-S SC3W-M3-3 SC3W-M3-4 SC3U-M3-3 SC3U-M3-4	GWS3-M3-S SC3W-M3-* SC3U-M3-*	ø7.5 or less	GWS4-M3-S
		6	6	9.5	3.5				GWS3-M3-S GWS4-M3-S FTS4-M3 SC3W-M3-* SC3U-M3-*	ø9.5 or less	
		8	6	11.5	3.5				↑	ø11.5 or less	
ø8	M3	4	6	7.5	3.5	GWS3-M3-S FTS4-M3	ø7 or less	GWS4-M3-S SC3W-M3-3 SC3W-M3-4 SC3U-M3-3 SC3U-M3-4	GWS3-M3-S SC3W-M3-* SC3U-M3-*	ø7.5 or less	GWS4-M3-S
		6	6	9.5	3.5				GWS3-M3-S GWS4-M3-S FTS4-M3 SC3W-M3-* SC3U-M3-*	ø9.5 or less	
		8	6	11.5	3.5				↑	ø11.5 or less	
ø10	M5	4	7	10	5	GWS*-M5-S SC3W-M5-* SC3U-M5-* GWS4-M5-S FTS4-M5 FTS6-M5	ø10 or less	GWS*-M5 GWS6-M5-S	GWS*-M5-S SC3W-M5-* SC3U-M5-* GWS4-M5-S FTS4-M5 FTS6-M5	ø10 or less	GWS*-M5 GWS6-M5-S
		6	7	12	5				GWS*-M5-S SC3W-M5-* SC3U-M5-* GWS4-M5-S GWS6-M5-S GWS4-M5 FTS4-M5 FTS6-M5	ø12 or less	GWS6-M5
		10	7	16	5				GWS*-M5-S SC3W-M5-* SC3U-M5-* GWS4-M5-S GWS6-M5-S GWS4-M5 GWS6-M5 FTS4-M5 FTS6-M5	ø14 or less	

* Port dimension indicates dimensions for standard/without switch

2. Fine speed MDC2-F

⚠ CAUTION

■ Perform adjustment such as centering so that a lateral load is not applied to the cylinder. Adjust and install the sliding guide so that it is not twisted.

- When the load or the resistance fluctuates, operation becomes unstable.
- With a large difference between static friction and kinematic friction of the guide, operation becomes unstable.

Use/maintenance

1. Common

⚠ CAUTION

- Because this cylinder is a non-disassembly, do not apply excessive force to the rod metal or the cylinder body.

MVC

Small cylinder with suction pad

ø6/ø10

Space saving structure

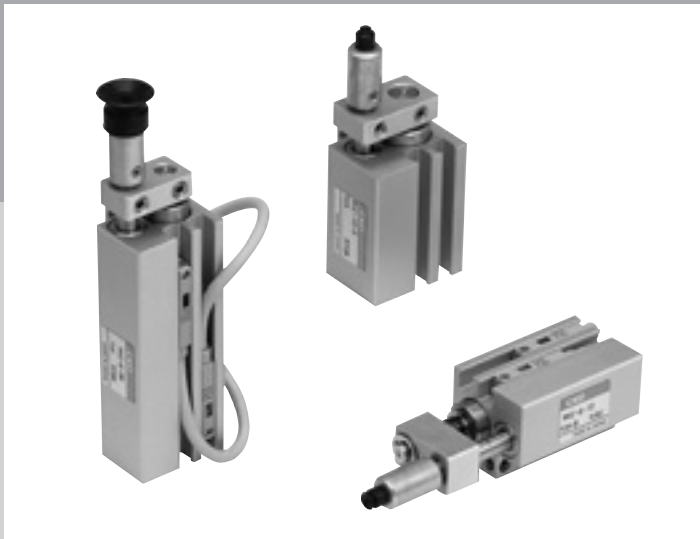

Overview

This cylinder is a compact cylinder whose end is equipped with a suction pad. Because the suction pad port is attached to the body, the piping is not moved when the cylinder activates. The ideal cylinder for pick & place.

Features

Workpiece suction portion and vacuum path are provided on the guide rod as standard.

Guide rod for rotation-stop is provided as standard.

Socket suction pad (ø2 to ø10) can be mounted on the rod end.

Can be mounted directly from 2 directions, with its square body.

Miniature cylinder switch is integrated into the body groove.

CONTENTS

Product introduction	1372
Series variation	1373
● Double acting/single rod	1374
Technical data	1381
⚠ Safety precautions	1382

For compact and space saving features.

Total length in the cylinder shaft direction is reduced.
Small cylinder with suction pad/MVC Series with a new level of compact and space saving features.
The ideal cylinder for suction/transport process of electronic parts or precision parts.

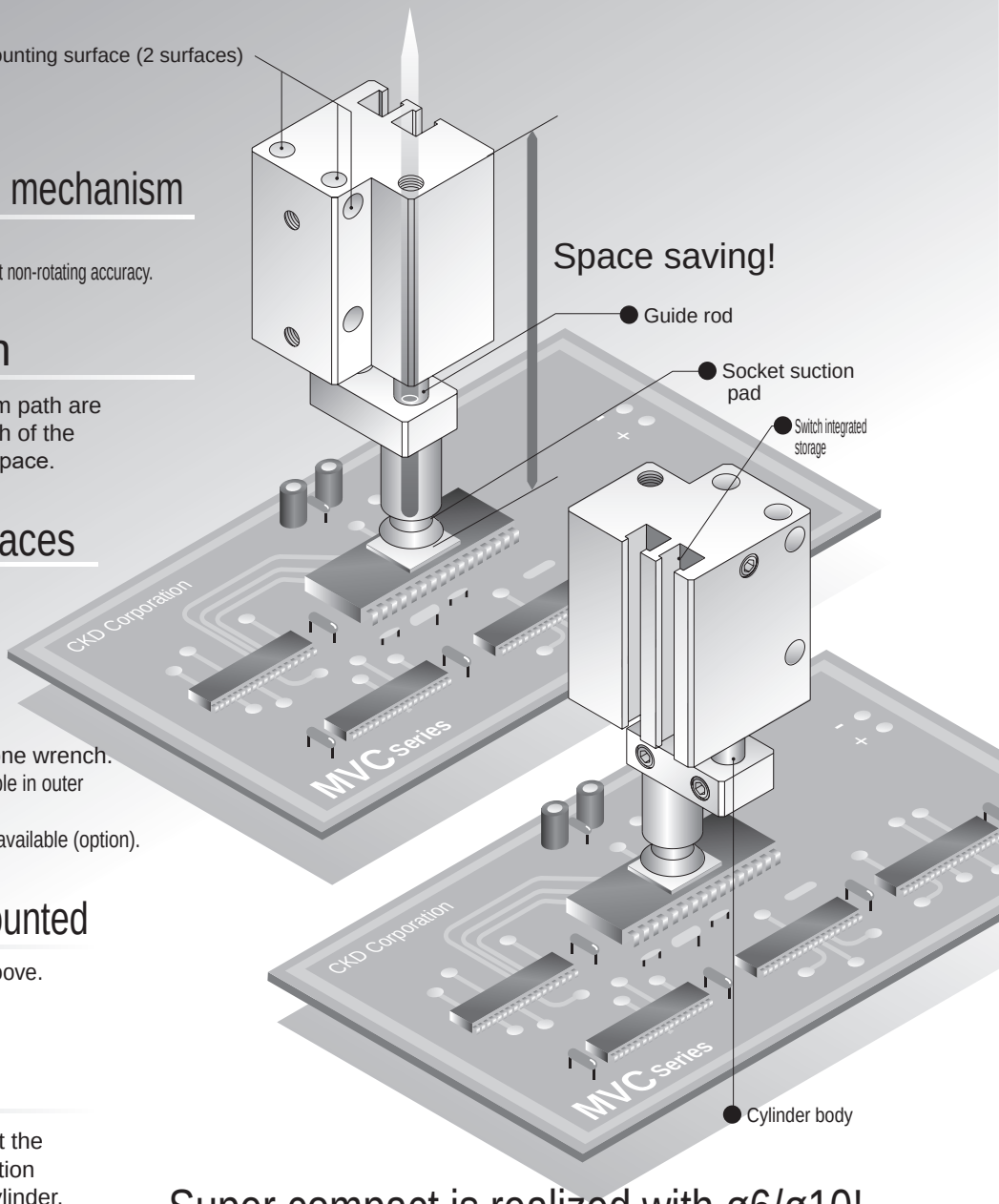

High precision rotation-stop mechanism

Guide rod for rotation-stop is provided.
Prevents rotation of the rod (suctioned object) with an excellent non-rotating accuracy.

Space saving design

As workpiece suction portion and vacuum path are provided on the guide rod, the total length of the cylinder is reduced significantly, saving space.

Direct mounting on 2 surfaces

Can be mounted directly from 2 directions, with its square body.

Wide selection of suction pads

Easily mounted to the rod end with just one wrench.
In addition, the socket suction pad is widely available in outer diameter of ø2 to ø10.
Depending on applications, a total of 24 types are available (option).

Miniature switch can be mounted

F-switch can be integrated into the body groove.

With buffer function

Even if the suction portion strikes against the workpiece when pushing, the buffer function activates to protect the workpiece and cylinder.

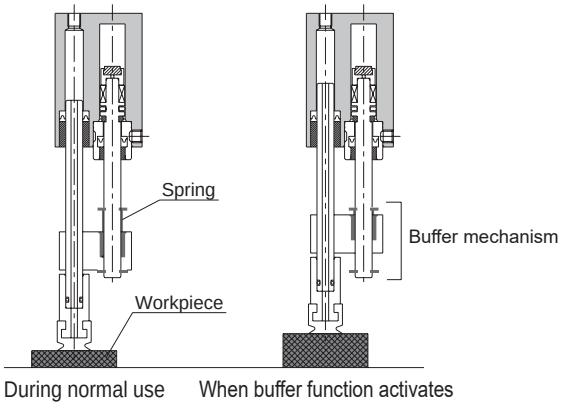

Super compact is realized with ø6/ø10!
Ideal for suction/transport process of electronic parts or precision parts!

Series variation

Small cylinder with suction pad MVC Series

●: Standard, ◎: Option

Variation	Model No. JIS symbol	Bore size (mm)	Standard stroke (mm)						Min. stroke (mm)	Max. stroke (mm)	Pad Material Nitrile rubber P*A	Pad Material Urethane rubber P*A-U	Pad Material Silicone rubber P*A-SI	Pad Material Fluoro rubber P*A-FKM	Option With buffer B	Switch	Page
			5	10	15	20	25	30									
Double acting/ single rod	MVC 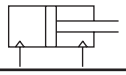	ø6/ø10	●	●	●	●	●	●	5	30	◎	◎	◎	◎	◎	◎	1374

Applications

● Suction/transport of electronic parts

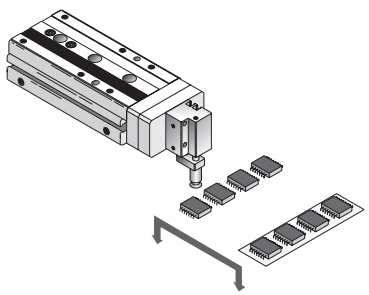

● Transport system of small parts

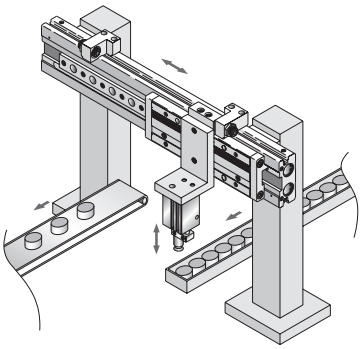

● Transport system of electronic parts

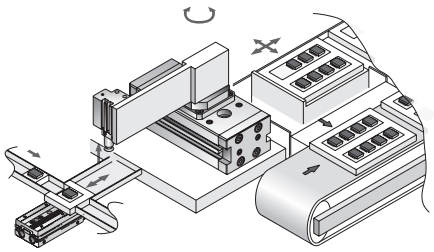

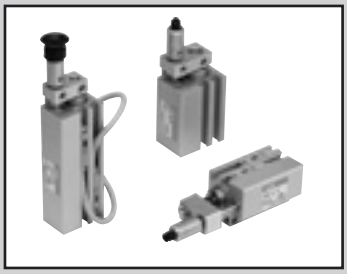

Small cylinder with suction pad double acting/single rod

MVC Series

● Bore size: ø6/ø10

JIS symbol

● Double acting

Specifications

Item	MVC	
Bore size mm	ø6	ø10
Actuation	Double acting	
Working fluid	Compressed air	
Max. working pressure MPa	0.7 (≈100 psi, 7 bar)	
Min. working pressure MPa	0.15 (≈22 psi, 1.5 bar)	0.1 (≈15 psi, 1 bar)
Proof pressure MPa	1.05 (≈150 psi, 10.5 bar)	
Vacuum port pressure	-101 kPa (≈-15 psi, -1.01 bar) to 0.6 MPa (≈87 psi, 6 bar) *1	
Ambient temperature °C	0 (32°F) to 60 (140°F) (no freezing) *2	
Port size	M3	M5
Stroke tolerance mm	+1.0 0	
Working piston speed mm/s	50 to 500	
Cushion	Rubber cushion	
Non-rotating accuracy °	±0.5 (*3)	
Lubrication	Not required (use turbine oil ISO VG32 if necessary for lubrication)	
Applicable pad	Refer to pages 1376 and 1381 for details.	
Allowable absorbed energy J	0.0046	0.035

*1: Application of pressure from the vacuum port can be performed only at vacuum burst. In addition, use burst pressure equal to the cylinder working pressure or less for this process.
*2: When using MVC with proximity switch, use the cylinder at an ambient temperature of 40°C or less. Failure to do so could lead to switch detection malfunction.
*3: Initial value at the pull end.

With buffer specifications

Specifications other than below are the same as above.

Item	MVC-*-*-B
Buffer stroke mm	4
Buffer part spring load N	When set: 1.3 Operated: 1.62 (buffer stroke of 4 mm operated)
Non-rotating accuracy (reference value)°	±2.6 (ø6), ±2.0 (ø10) (*2)

*1: Use the cylinder within buffer stroke of 4 mm. Otherwise, malfunctions may result.
*2: Initial value at the pull end.

Stroke

Bore size (mm)	Standard stroke (mm)	Max. stroke (mm)	Min. stroke with two switches (mm)		Min. stroke with one switch (mm)	
			Reed switch	Proximity switch	Reed switch	Proximity switch
ø6	5/10/15/20/25/30	30	10	5(10)	5	5
ø10	5/10/15/20/25/30	30	10	5(10)	5	5

*1: Products with stroke other than standard stroke are not available.
*2: For F2Y, F3Y or F3P, the min. stroke will be the dimensions in ( ).

Switch specifications

Item	2-wire reed	2-wire proximity			3-wire proximity			
	FOH/V	F2H/F2V	F2S	F2YH/F2YV	F3H/F3V	F3S	F3PH/F3PV (Made to order)	F3YH/F3YV
Applications	Dedicated for programmable controller	Dedicated for programmable controller			For programmable controller, relay			
Output method	-	-			NPN output		PNP output	NPN output
Power supply voltage	-	-			10 to 28 VDC		4.5 to 28 VDC	10 to 28 VDC
Load voltage	24 VDC	10 to 30 VDC		24 VDC ±10%	30 VDC or less			
Load current	5 to 20 mA (*3)	5 to 20 mA (*3)			50mA or less			
Indicator	Yellow LED (Lit when ON)	Yellow LED (Lit when ON)	LED (Lit when ON)	Red/green LED (Lit when ON)	Yellow LED (Lit when ON)	LED (Lit when ON)	Yellow LED (Lit when ON)	Red/green LED (Lit when ON)
Leakage current	1mA or less	1mA or less			10 μA or less			
Weight g	1 m:10 3 m:29							

*1: Refer to Ending Page 1 for detailed switch specifications and dimensions.
*2: Switches other than the above models, such as switches with connectors, are also available. Refer to Ending Page 1.
*3: The max. load current is 20 mA at 25°C. The current is lower than 20 mA if the operating ambient temperature around the switch is higher than 25˚C. (5 to 10 mA at 60°C)
*4: The F-switch uses a bend-resistant lead wire.

Cylinder weight table

(Unit: g)

Stroke (mm) / Bore size (mm)	5	10	15	20	25	30	Weight per switch
ø6	30.8	35.6	40.4	45.2	50	54.8	10
ø10	43.8	50	54.7	59.4	64.1	68.8	10

Theoretical thrust table

(Unit: N)

Bore size (mm)	Operating direction	Working pressure MPa							
		0.1	0.15	0.2	0.3	0.4	0.5	0.6	0.7
ø6	Push	-	4.24	5.65	8.48	11.3	14.1	17.0	19.8
	Pull	-	2.36	3.14	4.71	6.28	7.85	9.42	11.0
ø10	Push	7.85	11.8	15.7	23.6	31.4	39.3	47.1	55.0
	Pull	5.03	7.54	10.1	15.1	20.1	25.1	30.2	35.2

SCP*3
CMK2
CMA2
SCM
SCG
SCA2
SCS2
CKV2
CAV2/COVP/N2
SSD2
SSG
SSD
CAT
MDC2
MVC
SMG
MSD/MSDG
FC*
STK
SRL3
SRG3
SRM3
SRT3
MRL2
MRG2
SM-25
ShkAbs
FJ
FK
Spd Contr
Ending

How to order

● No switch (built-in magnet for switch)

MVC - 6 - 10 ———— P2A - B

● With switch (built-in magnet for switch)

MVC - 6 - 10 - F2V - R - P2A - B

Model No.
Ⓐ Bore size
Ⓑ Stroke
Ⓒ Switch model No.
Ⓓ Switch quantity
Ⓔ Pad
Ⓕ Buffer

[Example of model No.]

MVC-6-10-F0H-D-P2A-B

Ⓐ Bore size : ø6 mm
Ⓑ Stroke : 10 mm
Ⓒ Switch model No.: Reed F0H switch, lead wire 1 m
Ⓓ Switch quantity : 2
Ⓔ Pad : Nitrile rubber, O.D. ø2 mm
Ⓕ Buffer : With buffer

Code	Description
Ⓐ Bore size (mm)	
6	ø6
10	ø10

Ⓑ Stroke (mm)

5, 10, 15, 20, 25, 30

Ⓒ Switch model No.

Axial lead wire	Radial lead wire	Contact	Voltage AC	Voltage DC	Indicator	Lead wire
F0H*	F0V*	Reed		●	1-color LED	2-wire
-	F2S*	Prox.		●		
F2H*	F2V*			●		
-	F3S*			●		3-wire
F3H*	F3V*			●		
F3PH*	F3PV*			●	1-color LED (PNP output) (custom)	
F2YH*	F2YV*			●	2-color LED	2-wire
F3YH*	F3YV*			●		3-wire

* Lead wire length	
Blank	1 m (standard)
3	3 m (option)

Ⓓ Switch quantity	
R	1 on rod side
H	1 head side
D	2

Ⓔ Pad	
Blank	Without pad
P2A	Material: Nitrile rubber
P3.5A	
P5A	
P6A	
P8A	
P10A	
P2AU	Material: Urethane rubber
P3.5AU	
P5AU	
P6AU	
P8AU	
P10AU	
P2AS	Material: Silicone rubber
P3.5AS	
P5AS	
P6AS	
P8AS	
P10AS	
P2AF	Material: Fluoro rubber
P3.5AF	
P5AF	
P6AF	
P8AF	
P10AF	

Ⓕ Buffer	
Blank	Without buffer
B	With buffer

* Consult with CKD as support is also available for pad other than the above.

How to order switch

SW - F0H

Switch model No.
(Item Ⓒ above)

How to order socket and pad assembling parts

(assembling parts: socket + pad + hexagon socket set screw)

MVC - P2A

Pad
(Item Ⓔ above)

How to order pads

MVC - P2A - PAD

Pad
(Item Ⓔ above)

Specifications for rechargeable battery (Catalog No. CC-1226A)

● Design compatible with rechargeable battery manufacturing process

MVC -……- P4*

Internal structure and parts list

● MVC-6, 10

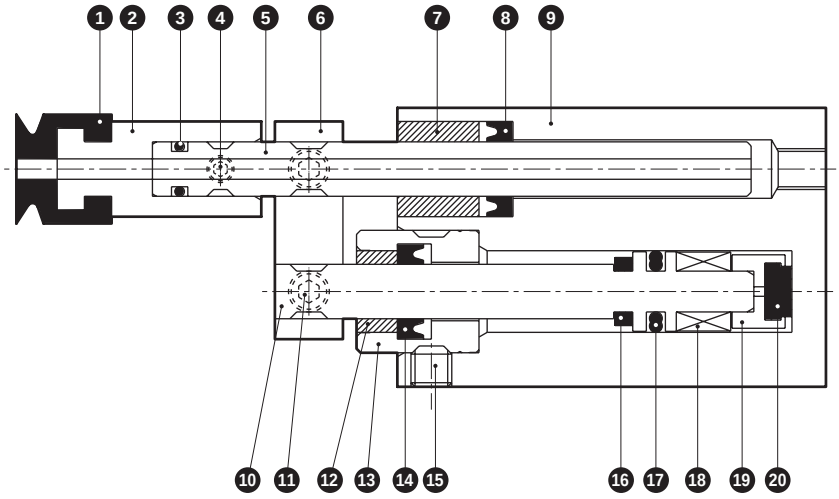

* The above figure shows the internal structure when with pad.
When without pad there is no ❶ ❷ ❹.

● MVC-6, 10-B (with buffer)

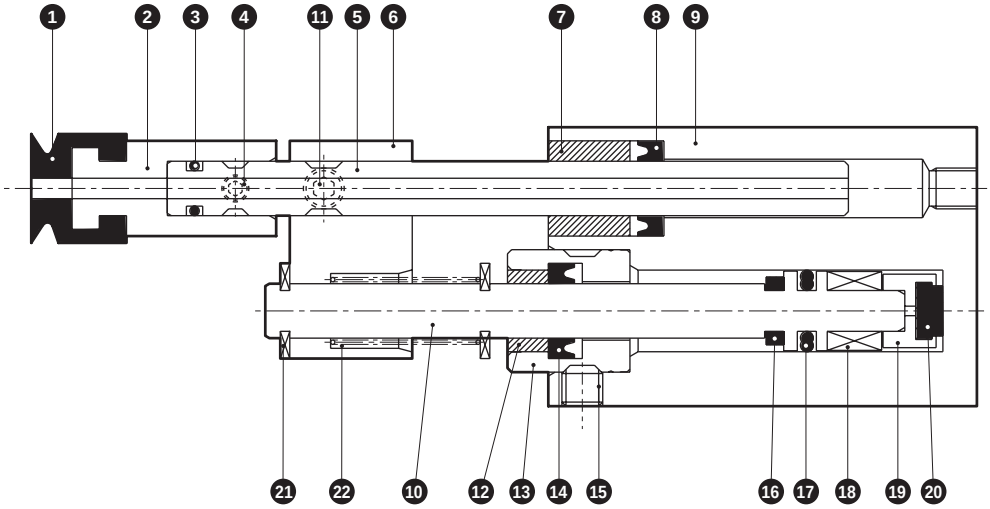

* The above figure shows the internal structure when with pad.
When without pad there is no ❶ ❷ ❹.

Cannot be disassembled

No.	Part name	Material	Remarks	No.	Part name	Material	Remarks
1	Pad			12	Bush	Oil-impregnated copper alloy	
2	Socket	Aluminum alloy	Chromate	13	Rod metal	Stainless steel	
3	O-ring	Nitrile rubber		14	Rod packing	Nitrile rubber	
4	Hexagon socket set screw	Stainless steel		15	Hexagon socket set screw	Stainless steel	
5	Guide rod	Stainless steel		16	Cushion rubber R	Urethane rubber	
6	Plate	Aluminum alloy	Chromate	17	Piston packing	Nitrile rubber	
7	Guide bush	Phosphor bronze		18	Magnet	Plastic	
8	Guide packing	Nitrile rubber		19	Adaptor	Aluminum alloy	
9	Cylinder body	Aluminum alloy	Hard alumite	20	Cushion rubber H	Urethane rubber	
10	Piston	Stainless steel		21	E ring	Stainless steel	
11	Hexagon socket set screw	Stainless steel		22	Spring	Piano wire	Electrodeposition

SCP*3
CMK2
CMA2
SCM
SCG
SCA2
SCS2
CKV2
CAV2/ COVP/N2
SSD2
SSG
SSD
CAT
MDC2
MVC
SMG
MSD/ MSDG
FC*
STK
SRL3
SRG3
SRM3
SRT3
MRL2
MRG2
SM-25
ShkAbs
FJ
FK
Spd Contr
Ending

Dimensions

● MVC-6 (without pad)

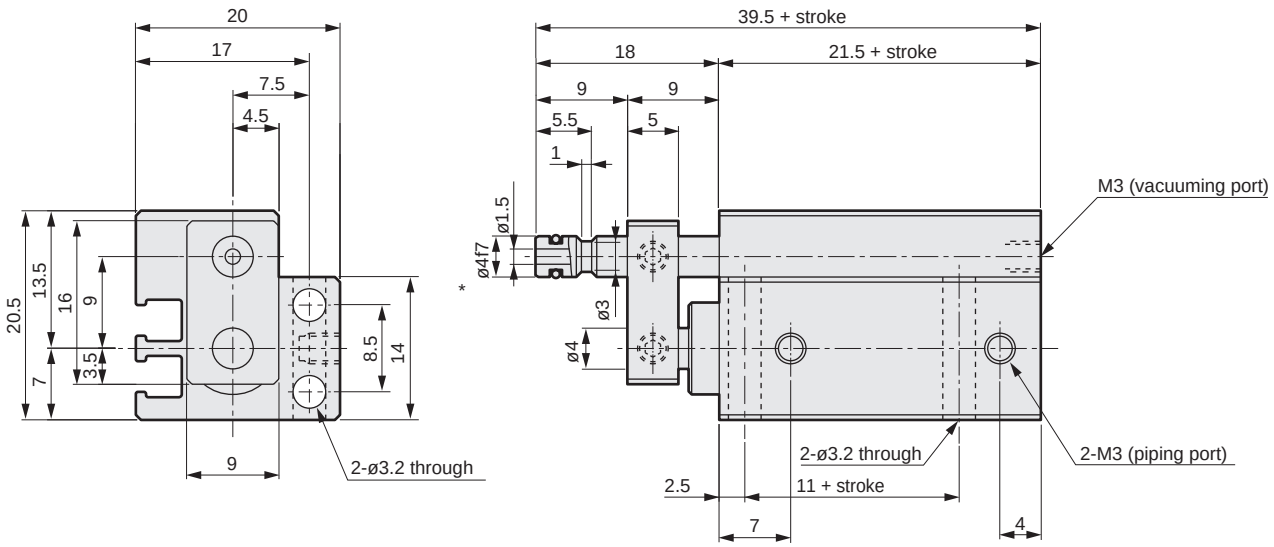

* Recommended inner diameter tolerance of the mating side's socket: H8

● MVC-10 (without pad)

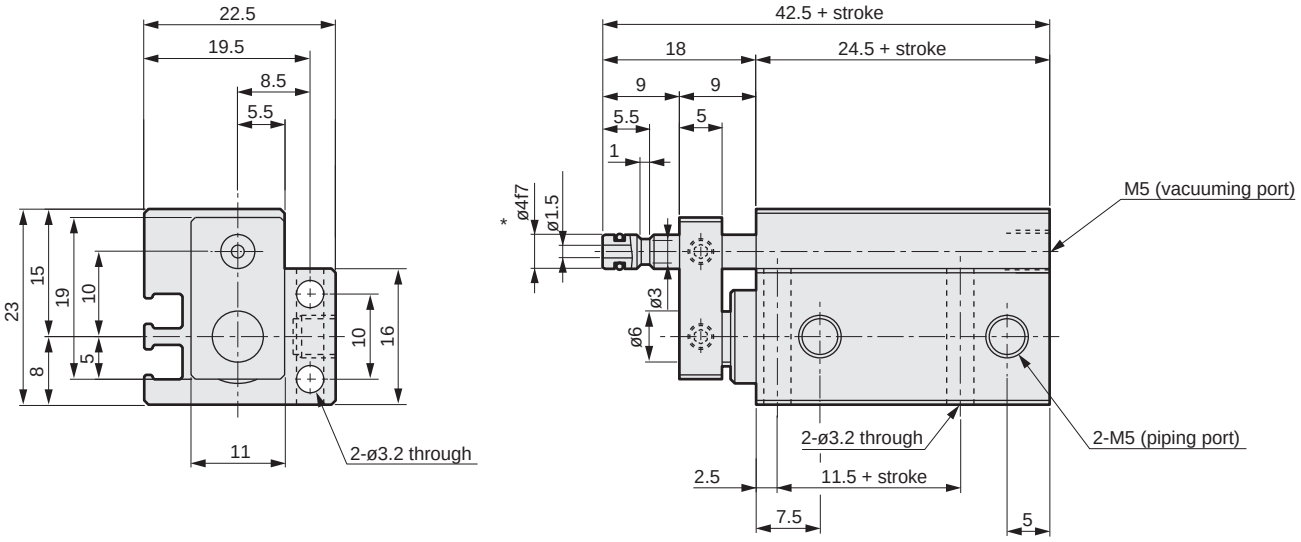

* Recommended inner diameter tolerance of the mating side's socket: H8

Dimensions

● MVC-6-*-B (with buffer)

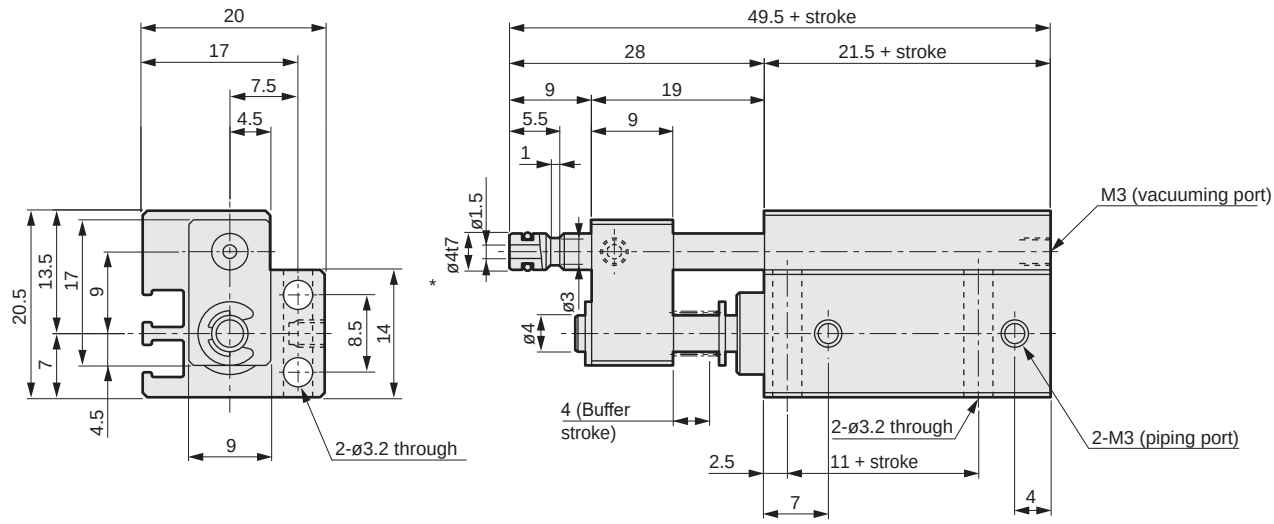

* Recommended inner diameter tolerance of the mating side's socket: H8

● MVC-10-*-B (with buffer)

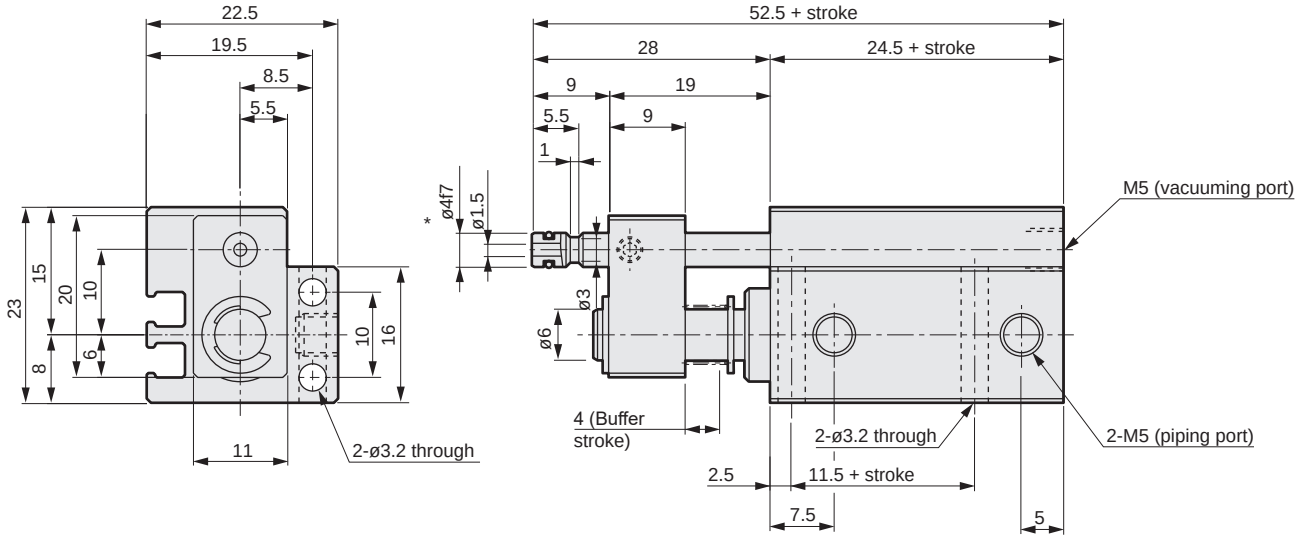

* Recommended inner diameter tolerance of the mating side's socket: H8

SCP*3
CMK2
CMA2
SCM
SCG
SCA2
SCS2
CKV2
CAV2/COVP/N2
SSD2
SSG
SSD
CAT
MDC2
MVC
SMG
MSD/MSDG
FC*
STK
SRL3
SRG3
SRM3
SRT3
MRL2
MRG2
SM-25
ShkAbs
FJ
FK
Spd Contr
Ending

Dimensions

● MVC-6/10 (with pad)

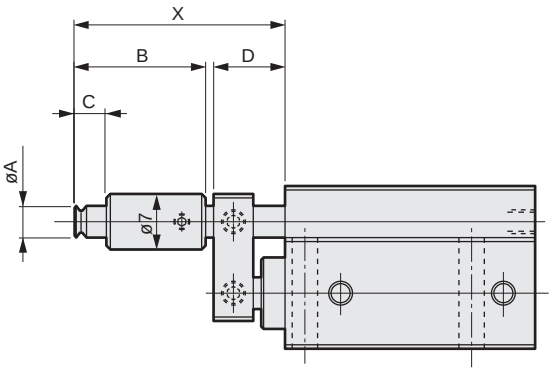

● MVC-6/10-B (with pad/with buffer)

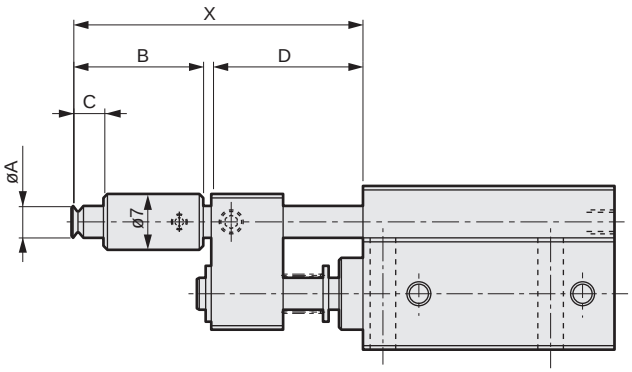

Code	Without buffer					With buffer	
Pad shape	A	B	C	X	D	X	D
P2A	ø2	16.5	4	26.5	9	36.5	19
P3.5A	ø3.5	16.5	4	26.5	9	36.5	19
P5A	ø5	17.5	6.5	27.5	9	37.5	19
P6A	ø6	17.5	6.5	27.5	9	37.5	19
P8A	ø8	18	7	28	9	38	19
P10A	ø10	18.5	7.5	28.5	9	38.5	19

● Switch mounting position

Reed switch (F0)		Proximity switch (F2S, F3S)	Proximity switch (F2, F3, F2Y, F3Y, F3P)	
Axial lead wire (H)	L-shaped lead wire (V)		Axial lead wire (H)	L-shaped lead wire (V)
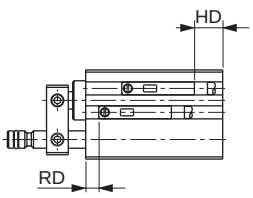	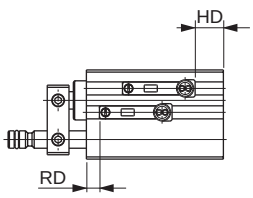	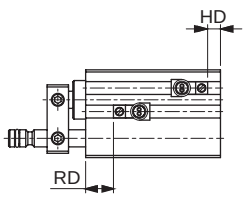	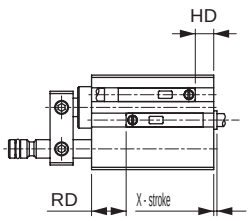	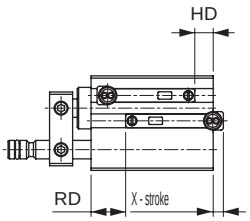

● Switch mounting position dimensions

(mm)

Switch installation dimensions	Reed switch		Proximity switch				
	$F0^{V}_{H}$		F2S, F3S		$F2^{V}_{H}$, $F3^{V}_{H}$, $F2Y^{V}_{H}$, $F3Y^{V}_{H}$, $F3P^{V}_{H}$		
Bore size	RD	HD	RD	HD	RD	HD	X (*4, *5)
ø6	3	1.5	6.5	3	7.5	4	5.7(10.2)
							2.7(7.2)
ø10	4.5	3	8	4.5	9	5.5	4.2(8.7)
							1.2(5.7)

*1: Min. stroke with two reed switches is 10 mm.
*2: X-stroke dimensions indicate the protruding dimensions from the end surface of the switch body. (When the calculated value is negative, there is no protrusion from the end surface of body.) The upper column indicates X dimensions when axial lead wire is used and the lower column indicates X dimensions when L-shaped lead wire is used.*3: For F2Y, F3Y or F3P, X dimensions will be the dimensions in ( ).

■ Formula for lifting capacity

$$W = \frac{P \times A}{-101.3} \times \frac{1}{0.102}$$

where
- W = Suspension capacity (N)
- P = Vacuum pressure KPa
- A = Pad area cm^2

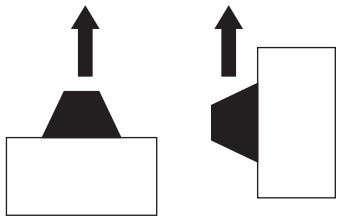

Horizontal lifting Vertical lifting

- The value obtained by this equation is a theoretical value. Calculate the value for the actual design with 4 times this value for horizontal suspension or 6 to 8 times or more for vertical suspension, as a safety factor.
- When lifting and then moving, ensure an adequate safety factor by considering the weight due to acceleration.
- Diameter of the pad under suction increases by approx. 10%.
- Pay attention to the position of center of gravity for the workpiece. If the workpiece inclines, the suction force will be extremely weakened.

■ Theoretical lifting force

- Circular pad

(N)

Pad diameter (ømm)	2	3.5	5	6	8	10
Suction area (cm^2) / Vacuum pressure	0.031	0.096	0.196	0.282	0.502	0.785
-93.3 KPa	0.284	0.873	1.765	2.550	4.511	7.061
-80.8 KPa	0.245	0.745	1.569	2.158	3.923	6.080
-66.7 KPa	0.206	0.618	1.275	1.863	3.236	5.099
-53.4 KPa	0.167	0.500	0.981	1.471	2.550	4.021
-40.0 KPa	0.118	0.373	0.785	1.079	1.961	3.040

Values in table are calculated values.

■ Pad material and characteristics

Item / Material	Hardness HS	Tensile strength N/cm^2	Tearing strength N/cm^2	Stretch %	Heat resist temp °C	Oil resistance	Sunlight resistance	Ozone resistance	Acid resistance	Alkali resistance	Abrasion resistance	Electrical insulation property	Gas permeation resistance
Nitrile rubber (NBR)	50° to 90°	686 to 1961	313 to 490	150 to 620	-26 to 120	◎	x	x	△	○	◎	x	○
Silicone rubber (SI)	54° to 80°	441 to 784	117 to 411	100 to 300	-60 to 250	△	◎	◎	△	○	x	◎	x
Urethane rubber (U)	50° to 80°	686 to 4315	588 to 1961	310 to 750	-20 to 75	△	◎	◎	x	x	◎	○	○
Fluoro rubber (FKM)	58° to 90°	931 to 1765	166 to 470	100 to 350	-10 to 230	◎	◎	◎	◎	△	◎	◎	◎

This table shows the general characteristics of synthetic rubber available from CKD.
◎: Ideal for use ○: Suitable for use △: Suitable for use under some conditions x: Unsuitable for use

- Refer to “Vacuum system equipment SELVACS (Catalog No.CC-796A)” for selection of vacuum equipment.

Safety Precautions

Be sure to read this section before use.

Refer to Intro Page 73 for general information of the cylinder, and to Intro Page 80 for general information of the cylinder switch.

Product-specific cautions: Small cylinder with suction pad MVC Series

Design/selection

WARNING

■ If dropping an adsorbed workpiece when using a system with a vacuum ejector could be dangerous, provide mechanical locking for safety.

CAUTION

■ Select a vacuum ejector, etc., that has an appropriate suction flow rate. If the suction flow rate is low, a vacuum failure will occur.

■ When using the product with MVC cylinder buffer, the buffer stroke must be within 4 mm. Use the product within 4 mm of the stroke.

Mounting, installation and adjustment

CAUTION

■ Do not use a spiral hose. Especially when used at the vacuum side, malfunction due to the piping resistance will occur as below.

(1) Delay of vacuum achievement time
(2) Loss of vacuum at the suction end due to lowering of flow rate
(3) Unstable operation of the vacuum switch

■ Note the following points when connecting more than one MVC cylinder to one vacuum ejector.

(1) If one suction pad leaks, vacuum will drop and cause suction failure of all pads.
(2) Piping between the vacuum ejector and branch must be wider than piping between the branch and suction pad.

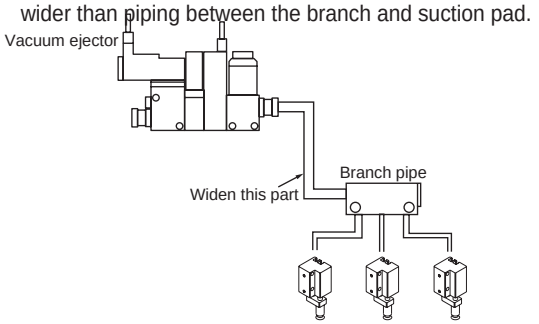

■ Perform piping with a sufficient effective cross-sectional area. For the vacuum piping side, select a piping with sufficient effective cross-sectional area to allow the flow of the max. suction flow rate to the ejector.

■ When using MVC with reed switch, the cylinder cannot be mounted on a magnetic substance (iron plate, etc.). This could lead to switch detection malfunction.

Use/maintenance

1. Common

CAUTION

■ Do not disassemble the product.

SMG

Compact cylinder

Space saving structure

ø6/ø10/ø16
ø20/ø25/ø32

CONTENTS

Series variation	1385
Product introduction	1384
● Double acting/single rod (SMG)	1386
● Single acting/push (SMG-X)	1392
● Single acting/pull (SMG-Y)	1392
● Double acting/fine speed (SMG-F)	1400
● Double acting/rotation-stop (SMG-M)	1404
SMG Series common switch dimensions	1409
⚠ Safety precautions	1412

SCP*3
CMK2
CMA2
SCM
SCG
SCA2
SCS2
CKV2
CAV2/COVP/N2
SSD2
SSG
SSD
CAT
MDC2
MVC
SMG
MSD/MSDG
FC*
STK
SRL3
SRG3
SRM3
SRT3
MRL2
MRG2
SM-25
ShkAbs
FJ
FK
Spd Contr
Ending

Even easier to use with added variations.

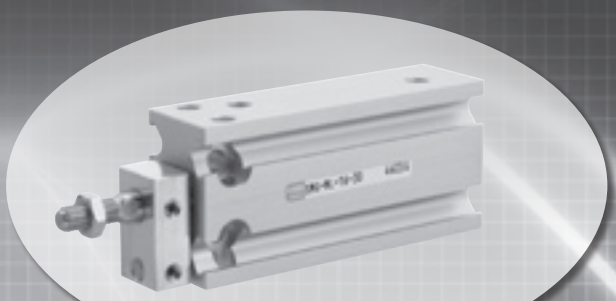

Rotation-stop (SMG-M Series)

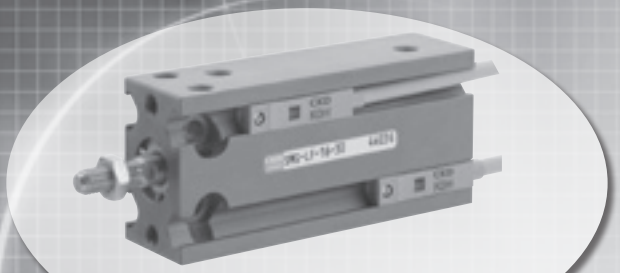

Fine speed (SMG-F Series)

Smooth low speed operation from 1 mm/sec is realized.

Clean-room specifications (SMG-P7*/P5* Series)

Dust generation in clean rooms is prevented (P7) and copper, silicon, and halogen materials are not used (P5)

Lightweight and space saving

Space saving and lightweight with integration of mount block.

Max. 33% lighter in weight (vs. conventional)

Max. 23% space saving (vs. conventional)

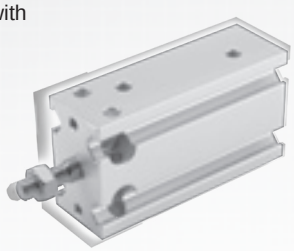

Simple shape for flexible mounting

Integration of mount block enables flexible selection from five direct mounting surfaces as standard.

Direct mounting from 5 faces

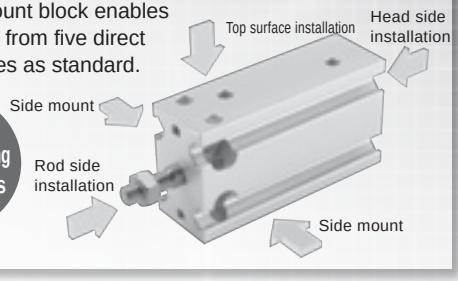

Detection switch fits in completely

Detection switch fits into the body with barely any protrusion.

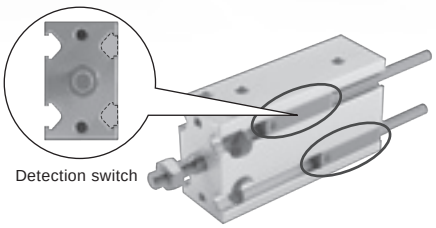

Sleek and flat

Easy maintenance

A new mounting method has been developed for easy maintenance.

Easy maintenance

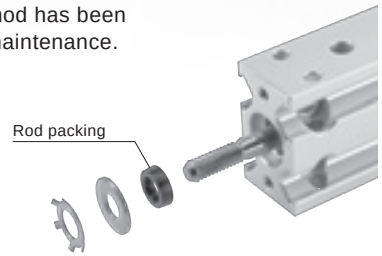

Compact cylinder SMG Series

●: Standard, ◎: Option, ■: Not available

Variation	Model No. JIS symbol	Bore size (mm)	Standard stroke (mm) 5	10	15	20	25	30	40	50	60	70	80	90	100	Min. stroke (mm) (*1)	Max. stroke (mm)	Custom stroke (per mm)	Switch	Page
Double acting/ single rod with switch	SMG SMG-L 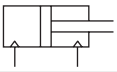	ø6/ø10/ø16	●	●	●	●	●	●	●	●	●					5	60	5	◎	1386
		ø20/ø25/ø32	●	●	●	●	●	●	●	●	●	●	●	●	●		100			
Single acting/ push with switch	SMG-X SMG-XL 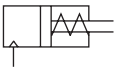	ø6/ø10/ø16	●	●	●											5	15	-	◎	1392
		ø20/ø25/ø32	●	●	●												15			
Single acting/pull with switch	SMG-Y SMG-YL	ø6/ø10/ø16	●	●	●											5	15	-	◎	1392
		ø20/ø25/ø32	●	●	●												15			
Double acting/ fine speed with switch	SMG-F SMG-LF 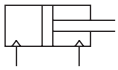	ø6/ø10/ø16	●	●	●	●	●	●								5	30	5	◎	1400
		ø20/ø25/ø32	●	●	●	●	●	●	●	●							50			
Double acting/ rotation-stop with switch	SMG-M SMG-ML 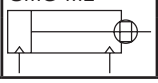	ø6/ø10/ø16	●	●	●	●	●	●	●	●	●					5	60	5	◎	1404
		ø20/ø25/ø32	●	●	●	●	●	●	●	●	●	●	●	●	●		100			

*1: Refer to pages 1386, 1392, 1400, 1404 for the min. stroke with switch.

Variation and option combination selection table

Category		Code	Double acting basic (None)	Single acting push (X)	Single acting pull (Y)	Rotation-stop (M)	With cylinder switch (L)	Fine speed (F)	NPT (N)	G (G)	Copper and PTFE free (P6)	Clean-room specs (exhaust port) (P7 P5)	Clean-room specs (vacuum) (P71 P51)
Variation	Double acting basic	Blank				◎	◎	◎	○	○	*1	◎	◎
	Single acting push	Y			x	○	◎	x	○	○	*1	x	x
	Single acting pull	X				○	◎	x	○	○	*1	x	x
	Rotation-stop	M					◎	○	○	○	*1	x	x
	With cylinder switch	L						◎	○	○	*1	◎	◎
	Fine speed	F							○	○	x	◎	◎
Port thread	NPT	N								x	*1	x	x
	G	G									*1	x	x
Option	Copper and PTFE free	P6										x	x
	Clean-room specs (exhaust port)	P7, P5											x
	Clean-room specs (vacuum)	P71, P51											
Accessory	Cylinder switch	Listed separately	◎	◎	◎	◎	◎	◎	◎	◎	◎	◎	◎

◎: Option
○: Available (made-to-order product)
△: Available depending on conditions (Contact CKD.)
x: Not available

Caution
*1: P6 is provided as standard. (P6 code is not required.)

[Example of model No.]

SMG - X M L - 16 ○ - 20 - K0H - D - ○

- SMG: Model No.
- X M L: Variation (* List in order from left to right in the table.)
- 16: Ⓐ Bore size
- ○: Ⓑ Port thread
- 20: Ⓒ Stroke
- K0H: Ⓓ Switch model No.
- D: Ⓔ Switch quantity
- ○: Ⓕ Option (* List in order from left to right in the table.)

Model No.: Compact cylinder
● Variation: Single acting/push/rotation-stop/ with switch
Ⓐ Bore size : ø16 mm
Ⓑ Port thread : Rc thread
Ⓒ Stroke : 20 mm
Ⓓ Switch model No.: Reed KOH switch, lead wire 1 m
Ⓔ Switch quantity : 2
Ⓕ Option : None

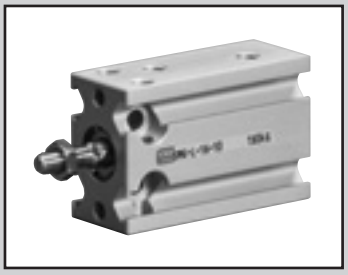

Compact cylinder double acting/single rod

SMG Series

● Bore size: ø6/ø10/ø16/ø20/ø25/ø32

JIS symbol

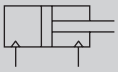

Double acting

RoHS CAD

Specifications

1 MPa ≈ 145.0 psi, 1 MPa = 10 bar

Item	SMG SMG-L (with switch)					
Bore size mm	ø6	ø10	ø16	ø20	ø25	ø32
Actuation	Double acting					
Working fluid	Compressed air					
Max. working pressure MPa	0.7 (≈100 psi, 7 bar)					
Min. working pressure MPa	0.12	0.06 (≈8.7 psi, 0.6 bar)	0.05 (≈7.3 psi, 0.5 bar)			
Proof pressure MPa	1.05 (≈150 psi, 10.5 bar)					
Ambient temperature °C	-10 (14°F) to 60 (140°F) (no freezing)					
Port size	M5					Rc1/8
Stroke tolerance mm	+1.5 0					
Working piston speed mm/s	50 to 500					
Cushion	With rubber cushion					
Lubrication	Not required (use turbine oil class 1 ISO VG32 if necessary for lubrication)					
Allowable absorbed energy J	0.012	0.036	0.1	0.1	0.19	0.5

Stroke

Bore size (mm)	Standard stroke (mm)	Min. stroke (mm)
ø 6	5, 10, 15, 20, 25, 30, 40, 50, 60	5
ø10		
ø16		
ø20	5, 10, 15, 20, 25, 30, 40, 50, 60, 70, 80, 90, 100	
ø25		
ø32		

*1: The custom stroke is available in 5 mm increments. However, the total length is the same as that of the next longer standard stroke.

Min. stroke with switch

Tube Bore size	1-color LED		2-color LED	
	K□H	K□V	K□YH	K□YV
ø 6	5		5	
ø10				
ø16				
ø20				
ø25				
ø32				

Switch specifications

● 1-color/2-color LED

Item	2-wire proximity		3-wire proximity			2-wire reed			
	K2H/K2V	K2YH/K2YV	K3H/K3V	K3PH/K3PV (Made to order)	K3YH/K3YV	K0H/K0V		K5H/K5V	
Applications	Dedicated for programmable controller		For programmable controller, relay			For programmable controller, relay		Programmable controller, relay IC circuit (without indicator), serial connection	
Output method	-		NPN output	PNP output	NPN output	-			
Power supply voltage	-		10 to 28 VDC			-			
Load voltage	10 to 30 VDC		30 VDC or less			12 V/24 VDC	110 VAC	5/12/24 VDC	110 VAC
Load current	5 to 20 mA (*3)		50 mA or less			5 to 50 mA	7 to 20 mA	50 mA or less	20 mA or less
Indicator	LED (Lit when ON)	Red/green LED (Lit when ON)	LED (Lit when ON)	Yellow LED (Lit when ON)	Red/green LED (Lit when ON)	LED (Lit when ON)		-	
Leakage current	1 mA or less		10 μA or less			0 mA			
Weight g	1 m:18 3 m:49 5 m:80	1 m: 31 3 m: 85 5 m:139	1 m:18 3 m:49 5 m:80		1 m: 31 3 m: 85 5 m:139	1 m:18 3 m:49 5 m:80			

*1: Refer to Ending Page 1 for detailed switch specifications and dimensions.
*2: Switches other than the above models, such as switches with connectors, are also available. Refer to Ending Page 1.
*3: The max. load current is 20 mA at 25°C. The current is lower than 20 mA if the operating ambient temperature around the switch is higher than 25°C. (5 to 10 mA at 60°C)

Cylinder weight

(Unit: g)

Model No. / Bore size	Product weight when stroke S = 0 mm		Additional weight per S = 5mm
	SMG double acting	SMG-L double acting/with switch	
ø6	18	18	3
ø10	27	27	3
ø16	41	56	6
ø20	87	115	11
ø25	164	208	17
ø32	267	335	26

(Example) Product weight

SMG-L-16-10-K2H-D
- Product weight for 0 mm stroke ····· 56 g
- Additional weight when S = 10 mm ····· 6 g x 10/5 = 12 g
- Weight of 2 cylinder switches ····· 18 g x 2 = 36 g
- Product weight ····· 56 g + 12 g + 36 g = 104 g

Theoretical thrust table

(Unit: N)

Bore size (mm)	Operating direction	Working pressure MPa							
		0.1	0.15	0.2	0.3	0.4	0.5	0.6	0.7
ø6	Push	-	4.24	5.65	8.48	11.3	14.1	17.0	19.8
	Pull	-	3.18	4.24	6.36	8.48	10.6	12.7	14.8
ø10	Push	7.85	11.8	15.7	23.6	31.4	39.3	47.1	55.0
	Pull	6.60	9.90	13.2	19.8	26.4	33.0	39.6	46.2
ø16	Push	20.1	30.2	40.2	60.3	80.4	$1.01x10^2$	$1.21x10^2$	$1.41x10^2$
	Pull	17.3	25.9	34.6	51.8	69.1	86.4	$1.04x10^2$	$1.21x10^2$
ø20	Push	31.4	47.1	62.8	94.2	$1.26x10^2$	$1.57x10^2$	$1.88x10^2$	$2.20x10^2$
	Pull	26.4	39.6	52.8	79.2	$1.06x10^2$	$1.32x10^2$	$1.58x10^2$	$1.85x10^2$
ø25	Push	49.1	73.6	98.2	$1.47x10^2$	$1.96x10^2$	$2.45x10^2$	$2.95x10^2$	$3.44x10^2$
	Pull	41.2	61.9	82.5	$1.24x10^2$	$1.65x10^2$	$2.06x10^2$	$2.47x10^2$	$2.89x10^2$
ø32	Push	80.4	$1.21x10^2$	$1.61x10^2$	$2.41x10^2$	$3.22x10^2$	$4.02x10^2$	$4.83x10^2$	$5.63x10^2$
	Pull	69.1	$1.04x10^2$	$1.38x10^2$	$2.07x10^2$	$2.76x10^2$	$3.46x10^2$	$4.15x10^2$	$4.84x10^2$

SCP*3
CMK2
CMA2
SCM
SCG
SCA2
SCS2
CKV2
CAV2/COVP/N2
SSD2
SSG
SSD
CAT
MDC2
MVC
SMG
MSD/MSDG
FC*
STK
SRL3
SRG3
SRM3
SRT3
MRL2
MRG2
SM-25
ShkAbs
FJ
FK
Spd Contr
Ending

How to order

No switch (without magnet for switch)

SMG - 32 ◯ - 25

With switch (built-in magnet for switch)

SMG-L - 32 ◯ - 25 - K2H - R

Ⓐ Model No.
Ⓑ Bore size
Ⓒ Port thread
Ⓓ Stroke
Ⓔ Switch model No.
Ⓕ Switch quantity

Code	Description
Ⓐ Model No.	
SMG	Double acting
SMG-L	Double acting/with switch
Ⓑ Bore size (mm)	
6	ø6
10	ø10
16	ø16
20	ø20
25	ø25
32	ø32
Ⓒ Port thread	
Blank	Rc thread
NN	NPT thread (ø32 only) (made-to-order product)
GN	G thread (ø32 only) (made-to-order product)

Ⓓ Stroke (mm)		Applicable bore size					
		ø6	ø10	ø16	ø20	ø25	ø32
Standard stroke	5	●	●	●	●	●	●
	10	●	●	●	●	●	●
	15	●	●	●	●	●	●
	20	●	●	●	●	●	●
	25	●	●	●	●	●	●
	30	●	●	●	●	●	●
	40	●	●	●	●	●	●
	50	●	●	●	●	●	●
	60	●	●	●	●	●	●
	70				●	●	●
	80				●	●	●
	90				●	●	●
	100				●	●	●

Ⓔ Switch model No.

Axial lead wire	Radial lead wire	Contact	Voltage AC	Voltage DC	Indicator	Lead wire
K0H*	**K0V***	Reed	●	●	1-color LED	2-wire
K5H*	**K5V***		●	●	No indicator lamp	
K2H*	**K2V***	Proximity		●	1-color LED	2-wire
K3H*	**K3V***			●		3-wire
K3PH*	**K3PV***			●	1-color LED (made-to-order product)	3-wire
K2YH*	**K2YV***			●	2-color LED	2-wire
K3YH*	**K3YV***			●		3-wire

* Lead wire length	
Blank	1 m (Standard)
3	3 m
5	5 m

Ⓕ Switch quantity	
R	1 on rod side
H	1 on head side
D	2

Precautions for model No. selection

*1: Refer to page 1386 for the min. stroke with switch.
*2: Copper and PTFE free as standard.

[Example of model No.]

SMG-L-6-15-K0H-R

Model: Compact cylinder
Ⓑ Bore size : ø6 mm
Ⓒ Port thread : Rc thread
Ⓓ Stroke : 15 mm
Ⓔ Switch model No. : Reed switch K0H, lead wire length 1 m
Ⓕ Switch quantity : 1 rod side

How to order switch

SW - K2H

↓

Switch model No. (Item Ⓔ above)

Clean-room specifications (Catalog No. CB-033SA)

● Anti-dust generation structure for use in cleanrooms

SMG-……-P7*

SMG-……-P5*

Specifications for rechargeable battery (Catalog No. CC-1226A)

● Design compatible with rechargeable battery manufacturing process

SMG-……-P4*

Internal structure and parts list

● ø6/ø10 (double acting)

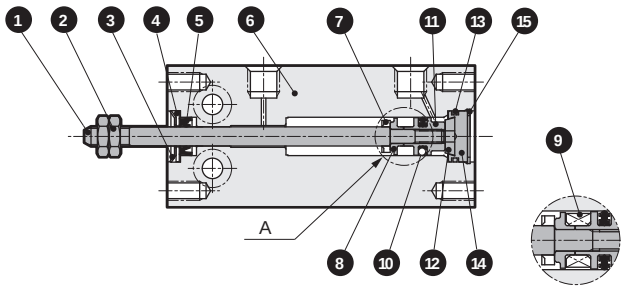

A part with switch

● ø16 to 32 (double acting)

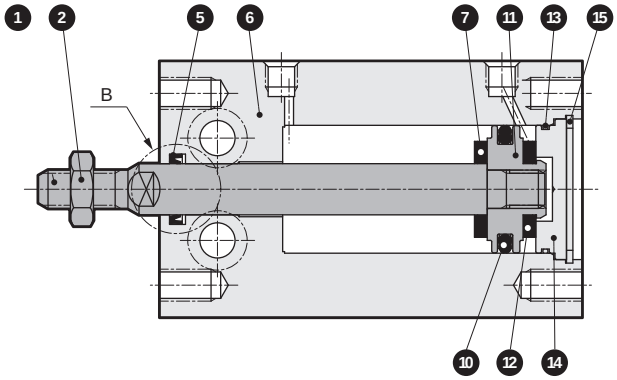

● ø16 to 32 (double acting/with switch)

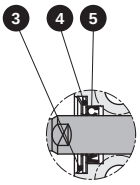

B part ø16

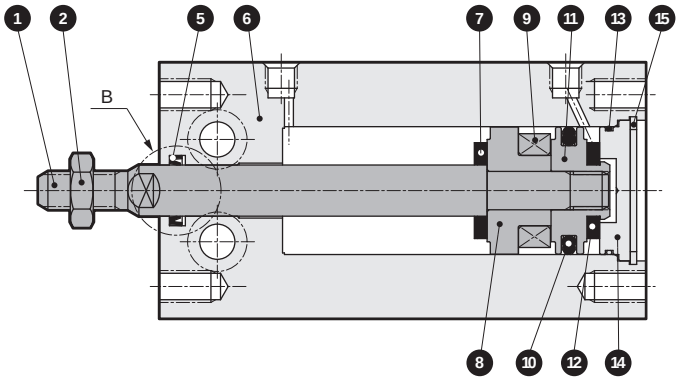

No.	Part name	Material	Remarks
1	Piston rod	Stainless steel	ø20, 25, 32 Industrial chrome plating
2	Rod nut	Steel	Nickeling
3	CR snap ring	Stainless steel	
4	Cap	Stainless steel	
5	Rod packing	Nitrile rubber	
6	Body	Aluminum alloy	Hard alumite
7	Cushion rubber R	Urethane rubber	
8	Spacer	Aluminum alloy	Chromate

No.	Part name	Material	Remarks
9	Magnet	-	
10	Piston packing	Nitrile rubber	
11	Piston	Aluminum alloy	Chromate
12	Cushion rubber H	Urethane rubber	
13	Cover gasket	Nitrile rubber	
14	Cover	Aluminum alloy	Chromate
15	C-snap ring	Steel	Zinc phosphate

Repair parts list

Bore size (mm)	Kit No.	Repair parts No.
ø6	SMG-6K	❸ ❺ ❼ ❿ ⓬ ⓭
ø10	SMG-10K	
ø16	SMG-16K	

Bore size (mm)	Kit No.	Repair parts No.
ø20	SMG-20K	❺ ❼ ❿ ⓬ ⓭
ø25	SMG-25K	
ø32	SMG-32K	

SCP*3
CMK2
CMA2
SCM
SCG
SCA2
SCS2
CKV2
CAV2/COVP/N2
SSD2
SSG
SSD
CAT
MDC2
MVC
SMG
MSD/MSDG
FC*
STK
SRL3
SRG3
SRM3
SRT3
MRL2
MRG2
SM-25
ShkAbs
FJ
FK
Spd Contr
Ending

Dimensions

● Double acting SMG-(L)

ø6/10

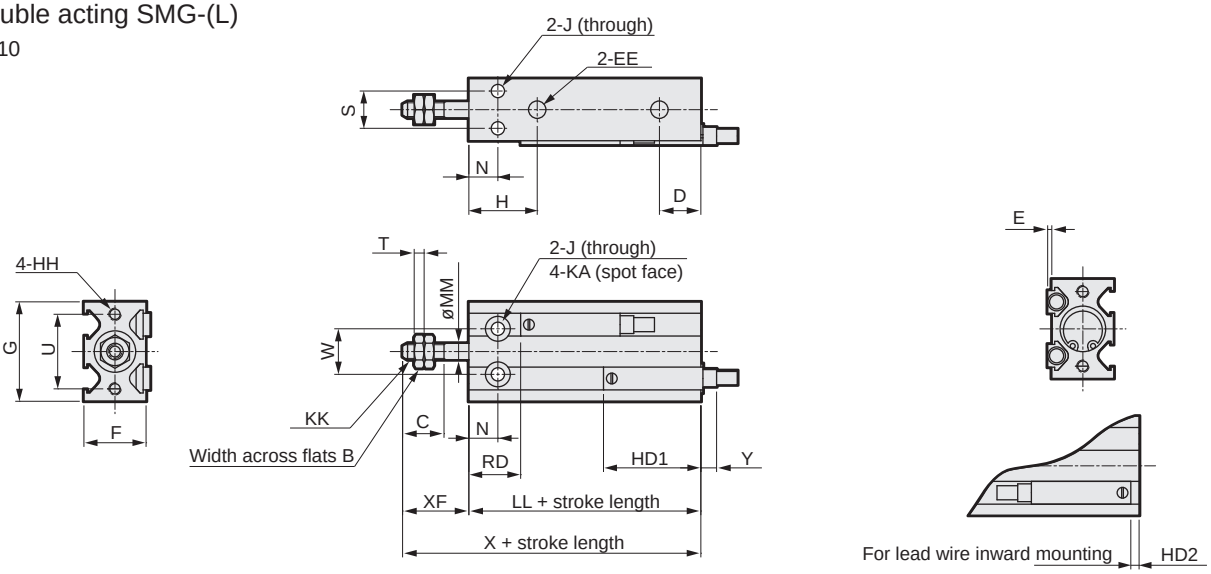

ø16/ø20/ø25/ø32

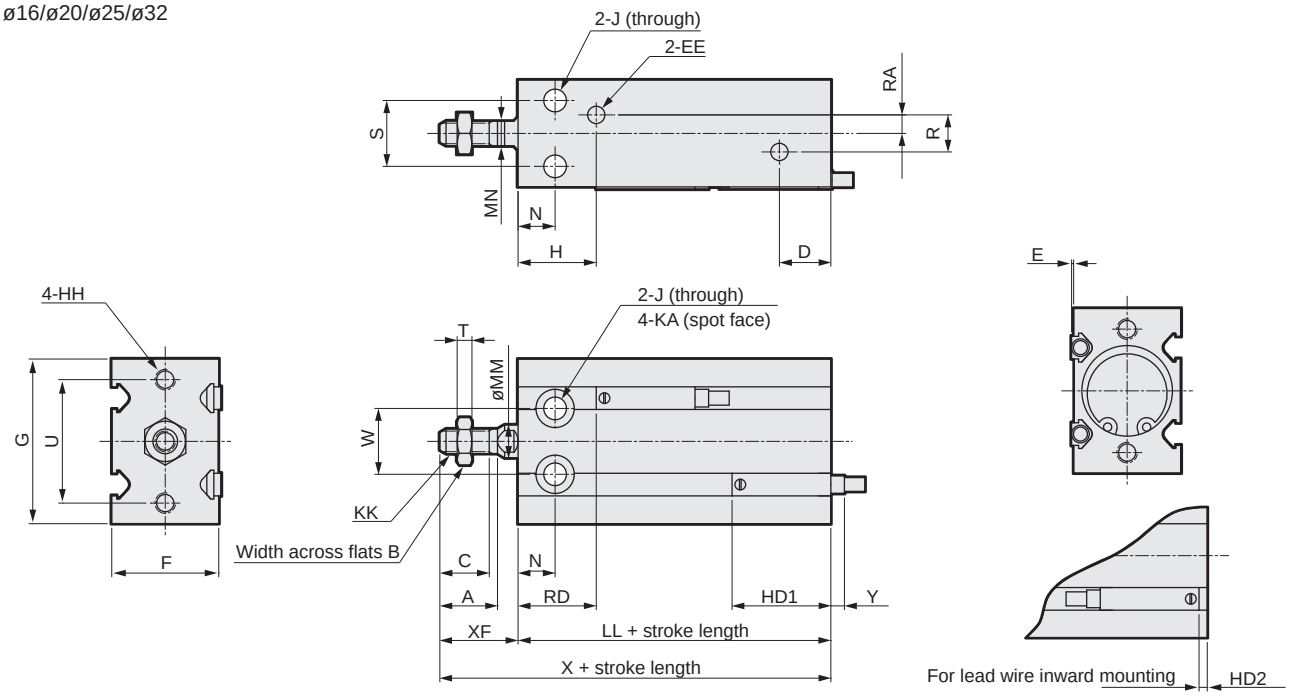

Code / Bore size	A	B	C	D	EE	F	G	H	HH	J	KA	KK	MM	MN	N	R	RA	S
ø6	-	5.5	7	10	M5	13	22	15	M3 depth 5	3.2	6 depth 4.8	M3	3	-	7	-	-	7
ø10	-	7	10	10	M5	15	24	16.5	M3 depth 5	3.2	6 depth 5	M4	4	-	7	-	-	9
ø16	12.5	8	11	11.5	M5	20	32	(*1) 16.5	M4 depth 6	4.5	7.5 depth 6.5	M5	6	5	7	4	2	12
ø20	14	10	12	12.5	M5	26	40	19	M5 depth 8	5.5	9 depth 8	M6	8	6	9	9	4.5	16
ø25	18	13	15.5	13	M5	32	50	21.5	M5 depth 8	5.5	9 depth 9	M8	10	8	10	9	4.5	20
ø32	22	17	19.5	12.5	Rc1/8	40	62	23	M6 depth 9	6.6	11 depth 11.5	M10x1.25	12	10	11	13.5	4.5	24

Code / Bore size	T	U	W	XF	LL		X		E	HD1	HD2	RD	Y (*2)
					No switch	With switch	No switch	With switch					
ø6	1.8	17	10	13	33	33	46	46	1	20	1	13	7
ø10	2.4	18	11	16	36	36	52	52	1	23.5	4.5	12.5	3.5
ø16	3.2	25	14	16	30	40	46	56	0.5	24.5	5.5	15.5	2.5
ø20	3.6	30	16	19	36	46	55	65	0.5	27	8	19	0
ø25	5	38	20	23	40	50	63	73	0.5	29	10	21	-2
ø32	6	48	24	27	42	52	69	79	0.5	30.5	11.5	21.5	-3.5

*1 : 14.5 for 5 stroke without switch
*2 : Y dimensions indicate the protruding dimensions from the end surface of the switch body. (Negative dimensions indicate the pull dimensions from the end surface of the body)
*3 : To calculate LL+ stroke or X+ stroke when using custom stroke, apply the next longer standard stroke (instead of the custom stroke) to the stroke value. (Example: If the custom stroke is 35 mm, apply the standard stroke of 40 mm)
*4 : Refer to page 1409 for HD, RD, and protruding dimensions of 2-color LED switches.

MEMO

Compact cylinder Single acting/push
Single acting/pull

SMG-$^{X}_{Y}$ Series

● Bore size: ø6/ø10/ø16/ø20/ø25/ø32

JIS symbol

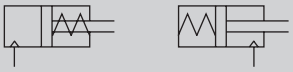

Single acting/push Single acting/pull

RoHS CAD

Specifications

1 MPa = 10 bar

Item		SMG-X, SMG-Y SMG-XL, SMG-YL (with switch)					
Bore size mm		ø6	ø10	ø16	ø20	ø25	ø32
Actuation	SMG-X(L)	Single acting/push					
	SMG-Y(L)	Single acting/pull					
Working fluid		Compressed air					
Max. working pressure MPa		0.7 (≈100 psi, 7 bar)					
Min. working pressure MPa	SMG-X(L)	0.2 (≈29 psi)	0.15 (≈22 psi, 1.5 bar)				0.13 (≈19 psi)
	SMG-Y(L)						
Proof pressure MPa		1.05 (≈150 psi, 10.5 bar)					
Ambient temperature °C		-10 (14°F) to 60 (140°F) (no freezing)					
Port size		M5					Rc1/8
Stroke tolerance mm		+1.5 0					
Working piston speed mm/s		50 to 500					
Cushion		Note) With rubber cushion					
Lubrication		Not required (use turbine oil class 1 ISO VG32 if necessary for lubrication)					
Allowable absorbed energy J		0.012	0.036	0.05	0.1	0.19	0.5

*1: Do not leave the single acting cylinder pressurized for a long time. If it is left pressurized for long periods, the piston rod may not return due to spring load when the pressure is released.
*2: One side rubber-cushioned for ø6.

Stroke

Bore size (mm)	Standard stroke (mm)	Max. stroke (mm)	Min. stroke (mm)
ø 6	5, 10, 15	15	5
ø10			
ø16			
ø20			
ø25			
ø32			

Min. stroke with switch

Model	Bore size	1-color LED		2-color LED	
		K□H	K□V	K□YH	K□YV
SMG-XL SMG-YL	ø 6	5		5	
	ø10				
	ø16				
	ø20				
	ø25				
	ø32				

SMG-X/SMG-Y spring load

(Unit: N)

Bore size (mm)	Stroke (mm)	When stroke = 0	Full stroke Operating	Bore size (mm)	Stroke (mm)	When stroke = 0	At full stroke operation
ø6	5	3.1	3.8	ø20	5	14	19
	10	2.3			10	8.8	
	15	1.6			15		
ø10	5	5.5	8.0	ø25	5	19	25
	10	3.0			10	14	
	15				15		
ø16	5	11	16	ø32	5	25	30
	10	5.9			10	21	
	15				15		

Switch specifications

● 1-color/2-color LED

Item	2-wire proximity		3-wire proximity			2-wire reed			
	K2H/K2V	K2YH/K2YV	K3H/K3V	K3PH/K3PV (Made to order)	K3YH/K3YV	K0H/K0V		K5H/K5V	
Applications	Dedicated for programmable controller		For programmable controller, relay			For programmable controller, relay		Programmable controller, relay IC circuit (without indicator), serial connection	
Output method	-		NPN output	PNP output	NPN output	-			
Power supply voltage	-		10 to 28 VDC			-			
Load voltage	10 to 30 VDC		30 VDC or less			12 V/24 VDC	110 VAC	5/12/24 VDC	110 VAC
Load current	5 to 20 mA (*3)		50 mA or less			5 to 50 mA	7 to 20 mA	50 mA or less	20 mA or less
Indicator	LED (Lit when ON)	Red/green LED (Lit when ON)	LED (Lit when ON)	Yellow LED (Lit when ON)	Red/green LED (Lit when ON)	LED (Lit when ON)		-	
Leakage current	1 mA or less		10 μA or less			0 mA			
Weight	1 m:18 3 m:49 5 m:80	1 m: 31 3 m: 85 5 m:139	1 m:18 3 m:49 5 m:80		1 m: 31 3 m: 85 5 m:139	1 m:18 3 m:49 5 m:80			

*1: Refer to Ending Page 1 for detailed switch specifications and dimensions.
*2: Switches other than the above models, such as switches with connectors, are also available. Refer to Ending Page 1.
*3: The max. load current is 20 mA at 25°C. The current is lower than 20 mA if the operating ambient temperature around the switch is higher than 25°C. (5 to 10 mA at 60°C.)

SMG-X Cylinder weight

(Unit: g)

Model No. / Bore size	5		10		15	
	No switch	With switch	No switch	With switch	No switch	With switch
ø6	21	21	23	24	26	26
ø10	31	31	34	34	41	41
ø16	47	62	53	68	66	81
ø20	98	125	109	135	131	158
ø25	180	223	196	240	233	277
ø32	293	361	319	386	376	444

SMG-Y Cylinder weight

(Unit: g)

Model No. / Bore size	5		10		15	
	No switch	With switch	No switch	With switch	No switch	With switch
ø6	20	21	23	23	26	26
ø10	30	30	33	33	39	40
ø16	61	62	67	68	79	80
ø20	98	124	108	135	130	157
ø25	180	223	196	240	231	275
ø32	291	359	317	385	372	439

Theoretical thrust table

● SMG-X

(Unit: N)

Bore size (mm)	Working pressure MPa					
	0.2	0.3	0.4	0.5	0.6	0.7
ø6	-	4.68	7.51	10.3	13.2	16.0
ø10	7.71	15.6	23.4	31.3	39.1	47.0
ø16	24.2	44.3	64.4	84.5	$1.05x10^2$	$1.25x10^2$
ø20	43.8	75.2	$1.07x10^2$	$1.38x10^2$	$1.69x10^2$	$2.01x10^2$
ø25	73.2	$1.22x10^2$	$1.71x10^2$	$2.20x10^2$	$2.70x10^2$	$3.19x10^2$
ø32	$1.31x10^2$	$2.11x10^2$	$2.92x10^2$	$3.72x10^2$	$4.53x10^2$	$5.33x10^2$

Note: The load above indicates thrust excluding the spring force at the push end.

● SMG-Y

(Unit: N)

Bore size (mm)	Working pressure MPa					
	0.2	0.3	0.4	0.5	0.6	0.7
ø6	-	2.56	4.68	6.80	8.92	11.0
ø10	5.19	11.8	18.4	25.0	31.6	38.2
ø16	18.6	35.8	53.1	70.4	87.7	$1.05x10^2$
ø20	33.8	60.2	86.6	$1.13x10^2$	$1.39x10^2$	$1.66x10^2$
ø25	57.5	98.7	$1.40x10^2$	$1.81x10^2$	$2.22x10^2$	$2.64x10^2$
ø32	$1.08x10^2$	$1.77x10^2$	$2.46x10^2$	$3.16x10^2$	$3.85x10^2$	$4.54x10^2$

Note: The load above indicates thrust excluding the spring force at the pull end.

How to order

No switch (without magnet for switch)

SMG-X - 32 ( ) - 15

With switch (built-in magnet for switch)

SMG-XL - 32 ( ) - 15 - K2H - R

Ⓐ Model No.
Ⓑ Bore size
Ⓒ Port thread
Ⓓ Stroke
Ⓔ Switch model No.
Ⓕ Switch quantity

Code	Description
Ⓐ Model No.	
SMG-X	Single acting push
SMG-XL	Single acting push/with switch
SMG-Y	Single acting pull
SMG-YL	Single acting pull/with switch
Ⓑ Bore size (mm)	
6	ø6
10	ø10
16	ø16
20	ø20
25	ø25
32	ø32
Ⓒ Port thread	
Blank	Rc thread
NN	NPT thread (ø32 only) (made-to-order product)
GN	G thread (ø32 only) (made-to-order product)

Ⓓ Stroke (mm)

Bore size	Stroke
6 to 32	5, 10, 15

Ⓔ Switch model No.

Axial lead wire	Radial lead wire	Contact	Voltage AC	Voltage DC	Indicator	Lead wire
K0H*	**K0V***	Reed	●	●	1-color LED	2-wire
K5H*	**K5V***	Reed	●	●	No indicator lamp	2-wire
K2H*	**K2V***	Proximity		●	1-color LED	2-wire
K3H*	**K3V***	Proximity		●	1-color LED	3-wire
K3PH*	**K3PV***	Proximity		●	1-color LED (made-to-order product)	3-wire
K2YH*	**K2YV***	Proximity		●	2-color LED	2-wire
K3YH*	**K3YV***	Proximity		●	2-color LED	3-wire

* Lead wire length	
Blank	1 m (Standard)
3	3 m
5	5 m

Ⓕ Switch quantity	
R	1 on rod side
H	1 on head side
D	2

Precautions for model No. selection

*1: Refer to page 1392 for the min. stroke with switch.
*2: Copper and PTFE free as standard.

[Example of model No.]

SMG-XL-6-15-K0H-R

Model: Compact cylinder
Ⓐ Model No. : Single acting push
Ⓑ Bore size : ø6 mm
Ⓒ Port thread : Rc thread
Ⓓ Stroke : 15 mm
Ⓔ Switch model No. : Reed switch K0H, lead wire length 1 m
Ⓕ Switch quantity : 1 on rod side

How to order switch

SW - K2H

Switch model No.
(Item Ⓔ above)

Internal structure and parts list

● ø6 (single acting push)

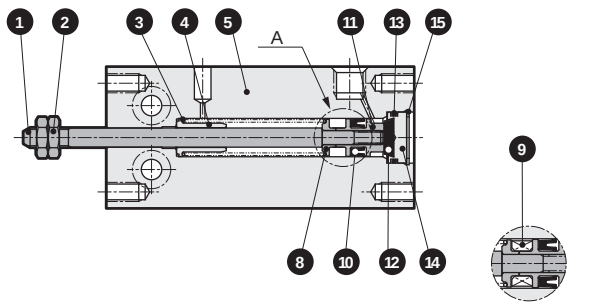

A part with switch

● ø10 (single acting push)

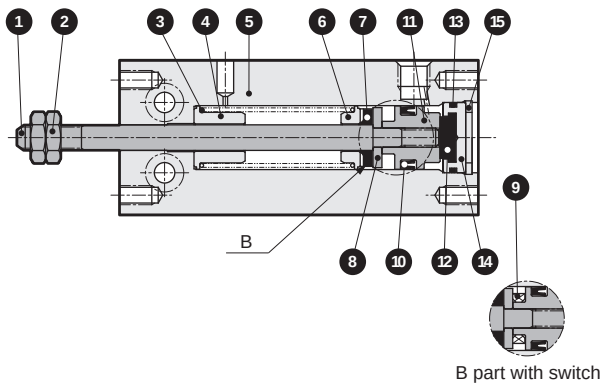

B part with switch

● ø16 to 32 (single acting push)

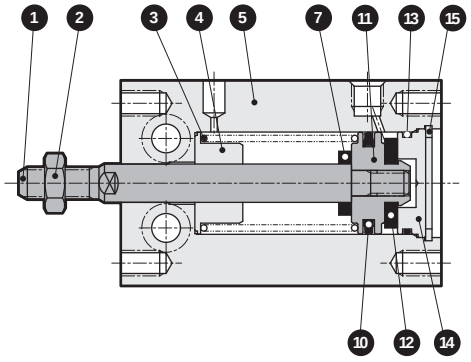

● ø16 to 32 (single acting push/with switch)

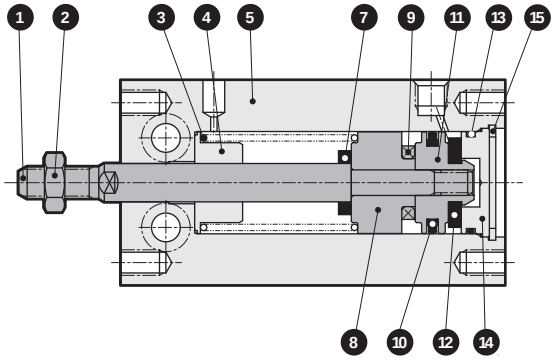

No.	Part name	Material	Remarks
1	Piston rod	Stainless steel	ø20, 25, 32 Industrial chrome plating
2	Rod nut	Steel	Nickeling
3	Coil spring	Piano wire	Electrodeposition
4	Spring holder	Aluminum alloy	
5	Body	Aluminum alloy	Hard alumite
6	Spring holder	Aluminum alloy	
7	Cushion rubber R	Urethane rubber	
8	Spacer	Aluminum alloy	Chromate

No.	Part name	Material	Remarks
9	Magnet	-	
10	Piston packing	Nitrile rubber	
11	Piston	Aluminum alloy	Chromate
12	Cushion rubber H	Urethane rubber	
13	Cover gasket	Nitrile rubber	
14	Cover	Aluminum alloy	Chromate
15	C-snap ring	Steel	Zinc phosphate

Repair parts list

Bore size (mm)	Kit No.	Repair parts No.
ø6	SMG-X-6K	10 12 13
ø10	SMG-X-10K	7 10 12 13
ø16	SMG-X-16K	7 10 12 13

Bore size (mm)	Kit No.	Repair parts No.
ø20	SMG-X-20K	7 10 12 13
ø25	SMG-X-25K	
ø32	SMG-X-32K	

Internal structure and parts list

● ø6 (single acting pull)

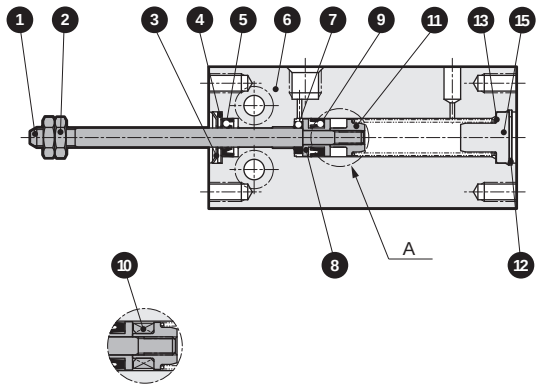

A part with switch

● ø10 (single acting pull)

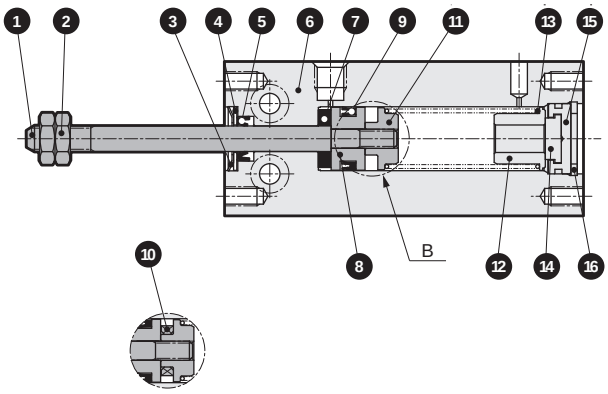

B part with switch

● ø16 to 32 (single acting pull)

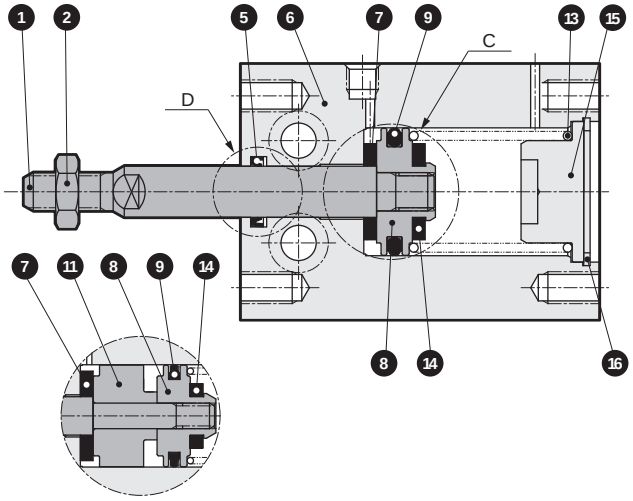

C part ø16

● ø16 to 32 (single acting pull/with switch)

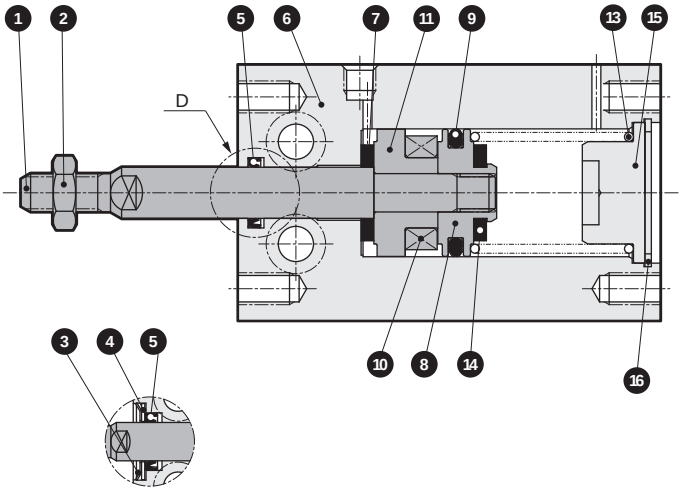

D part ø16

No.	Part name	Material	Remarks	No.	Part name	Material	Remarks
1	Piston rod	Stainless steel	ø20, 25, 32 Industrial chrome plating	9	Piston packing	Nitrile rubber	
2	Rod nut	Steel	Nickeling	10	Magnet	-	
3	CR snap ring	Stainless steel		11	Spacer	Aluminum alloy	Chromate
4	Cap	Stainless steel		12	Spring holder	Aluminum alloy	
5	Rod packing	Nitrile rubber		13	Coil spring	Piano wire	Electrodeposition
6	Body	Aluminum alloy	Hard alumite	14	Cushion rubber H	Urethane rubber	
7	Cushion rubber R	Urethane rubber		15	Cover	Aluminum alloy	Chromate
8	Piston	Aluminum alloy	Chromate	16	C-snap ring	Steel	Zinc phosphate

Repair parts list

Bore size (mm)	Kit No.	Repair parts No.
ø6	SMG-Y-6K	3 5 7 9
ø10	SMG-Y-10K	3 5 7 9 14
ø16	SMG-Y-16K	

Bore size (mm)	Kit No.	Repair parts No.
ø20	SMG-Y-20K	5 7 9 14
ø25	SMG-Y-25K	
ø32	SMG-Y-32K	

Dimensions

● Single acting push SMG-X (L)

ø6/10

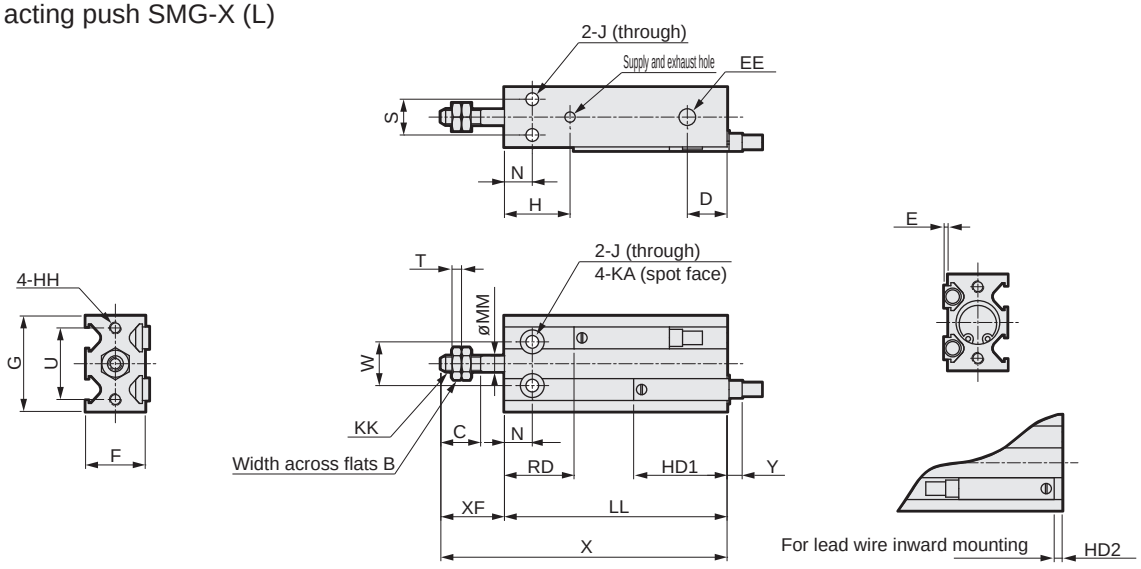

ø16/ø20/ø25/ø32

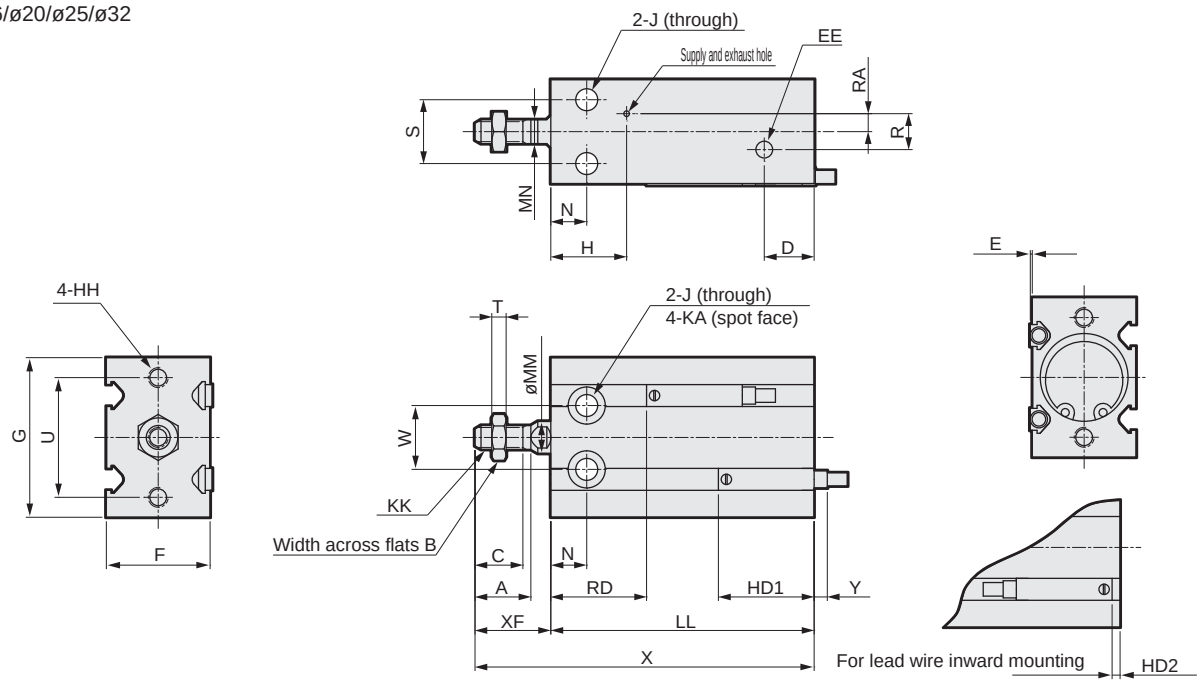

Code / Bore size	A	B	C	D	EE	F	G	H	HH	J	KA	KK	MM	MN	N	R	RA	S	T
ø6	-	5.5	7	10	M5	13	22	15	M3 depth 5	3.2	6 depth 4.8	M3	3	-	7	-	-	7	1.8
ø10	-	7	10	10	M5	15	24	16.5	M3 depth 5	3.2	6 depth 5	M4	4	-	7	-	-	9	2.4
ø16	12.5	8	11	11.5	M5	20	32	16.5	M4 depth 6	4.5	7.5 depth 6.5	M5	6	5	7	4	2	12	3.2
ø20	14	10	12	12.5	M5	26	40	19	M5 depth 8	5.5	9 depth 8	M6	8	6	9	9	4.5	16	3.6
ø25	18	13	15.5	13	M5	32	50	21.5	M5 depth 8	5.5	9 depth 9	M8	10	8	10	9	4.5	20	5
ø32	22	17	19.5	12.5	Rc1/8	40	62	23	M6 depth 9	6.6	11 depth 11.5	M10x1.25	12	10	11	13.5	4.5	24	6

Code / Bore size	U	W	XF	LL						X						E	HD1	HD2	RD		Y (*1)
				No switch			With switch			No switch			With switch								
				5st.	10st.	15st.	5st.	10st.	15st.	5st.	10st.	15st.	5st.	10st.	15st.				5, 10st.	15st.	
ø6	17	10	13	38	43	48	38	43	48	51	56	61	51	56	61	1	21.5	2.5	11.5	11.5	5.5
ø10	18	11	16	41	46	56	41	46	56	57	62	72	57	62	72	1	23.5	4.5	12.5	17.5	3.5
ø16	25	14	16	35	40	50	45	50	60	51	56	66	61	66	76	0.5	24.5	5.5	15.5	20.5	2.5
ø20	30	16	19	41	46	56	51	56	66	60	65	75	70	75	85	0.5	27	8	19	24	0
ø25	38	20	23	45	50	60	55	60	70	68	73	83	78	83	93	0.5	29	10	21	26	-2
ø32	48	24	27	47	52	62	57	62	72	74	79	89	84	89	99	0.5	30.5	11.5	21.5	26.5	-3.5

*1 : Y dimensions indicate the protruding dimensions from the end surface of the switch body. (Negative dimensions indicate the pull dimensions from the end surface of the body)
*2 : Refer to page 1409 for HD, RD, and protruding dimensions of 2-color LED switches.

SCP*3
CMK2
CMA2
SCM
SCG
SCA2
SCS2
CKV2
CAV2/COVP/N2
SSD2
SSG
SSD
CAT
MDC2
MVC
SMG
MSD/MSDG
FC*
STK
SRL3
SRG3
SRM3
SRT3
MRL2
MRG2
SM-25
ShkAbs
FJ
FK
Spd Contr
Ending

Dimensions

● Single acting pull SMG-Y (L)

ø6/10

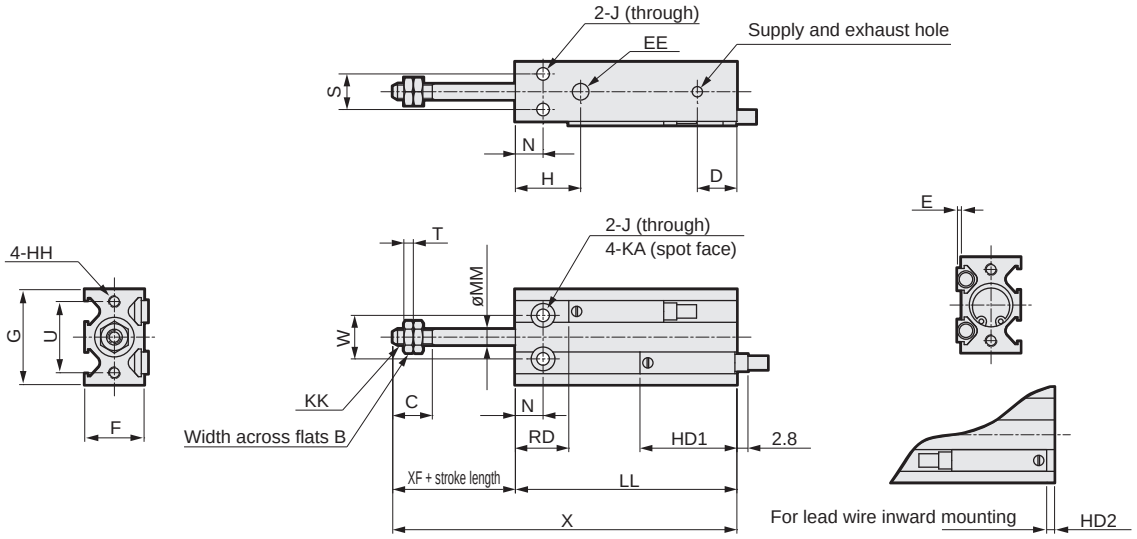

ø16/ø20/ø25/ø32

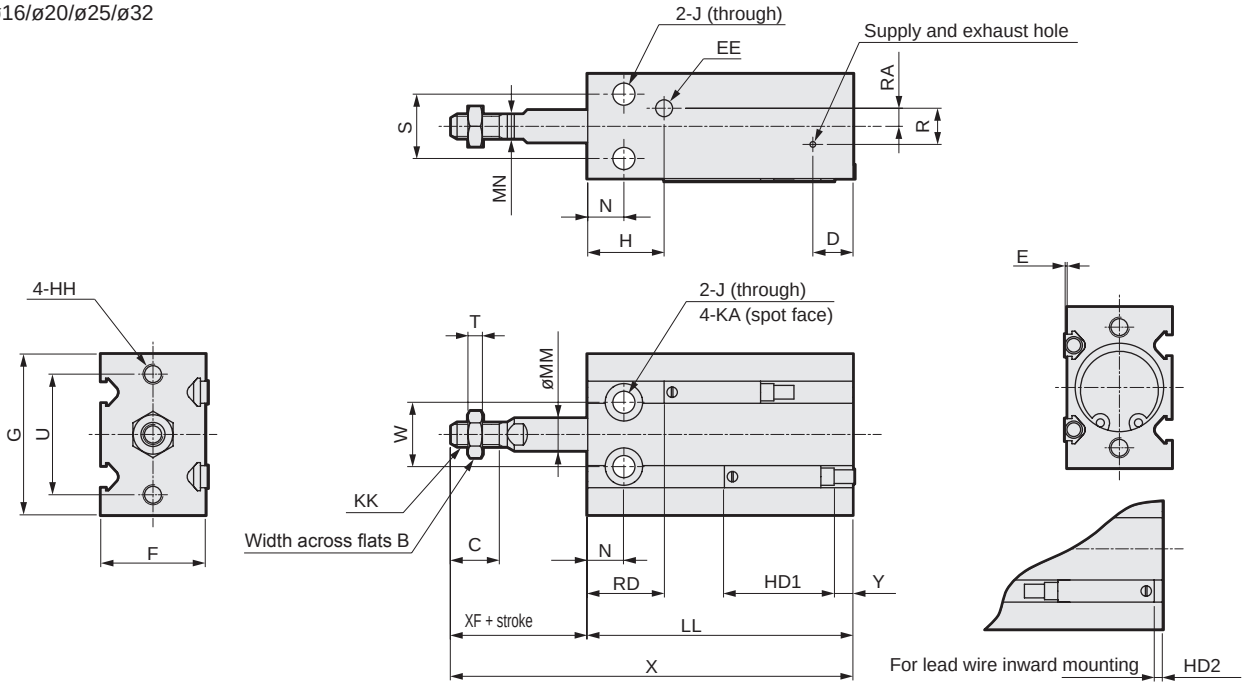

Code / Bore size	A	B	C	D	EE	F	G	H	HH	J	KA	KK	MM	MN	N	R	RA	S	T	U
ø6	-	5.5	7	10	M5	13	22	15	M3 depth 5	3.2	6 depth 4.8	M3	3	-	7	-	-	7	1.8	17
ø10	-	7	10	10	M5	15	24	16.5	M3 depth 5	3.2	6 depth 5	M4	4	-	7	-	-	9	2.4	18
ø16	12.5	8	11	11.5	M5	20	32	16.5	M4 depth 6	4.5	7.5 depth 6.5	M5	6	5	7	4	2	12	3.2	25
ø20	14	10	12	12.5	M5	26	40	19	M5 depth 8	5.5	9 depth 8	M6	8	6	9	9	4.5	16	3.6	30
ø25	18	13	15.5	13	M5	32	50	21.5	M5 depth 8	5.5	9 depth 9	M8	10	8	10	9	4.5	20	5	38
ø32	22	17	19.5	12.5	Rc1/8	40	62	23	M6 depth 9	6.6	11 depth 11.5	M10x1.25	12	10	11	13.5	4.5	24	6	48

Code / Bore size	W	XF	LL						X						E	HD1		HD2		RD	Y (*1)	
			No switch			With switch			No switch			With switch										
			5st.	10st.	15st.	5st.	10st.	15st.	5st.	10st.	15st.	5st.	10st.	15st.		5, 10st.	15st.	5, 10st.	15st.		5, 10st.	15st.
ø6	10	13	38	43	48	38	43	48	56	66	76	56	66	76	1	22.5	22.5	3.5	3.5	10.5	4.5	4.5
ø10	11	16	41	46	56	41	46	56	62	72	87	62	72	87	1	22.5	27.5	3.5	8.5	13.5	4.5	-0.5
ø16	14	16	45	50	60	45	50	60	66	76	91	66	76	91	0.5	24.5	29.5	5.5	10.5	15.5	2.5	-2.5
ø20	16	19	41	46	56	51	56	66	65	75	90	75	85	100	0.5	27	32	8	13	19	0	-5
ø25	20	23	45	50	60	55	60	70	73	83	98	83	93	108	0.5	29	34	10	15	21	-2	-7
ø32	24	27	47	52	62	57	62	72	79	89	104	89	99	114	0.5	30.5	35.5	11.5	16.5	21.5	-3.5	-8.5

*1 : Y dimensions indicate the protruding dimensions from the end surface of the switch body. (Negative dimensions indicate the pull dimensions from the end surface of the body)
*2 : Refer to page 1409 for HD, RD, and protruding dimensions of 2-color LED switches.

MEMO

Compact cylinder double acting/fine speed

SMG-F Series

● Bore size: ø6/ø10/ø16/ø20/ø25/ø32

JIS symbol

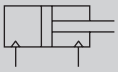

Double acting

RoHS

Specifications

1 MPa ≈ 145.0 psi, 1 MPa = 10 bar

Item	SMG-F SMG-LF (with switch)					
Bore size mm	ø6	ø10	ø16	ø20	ø25	ø32
Actuation	Double acting					
Working fluid	Compressed air					
Max. working pressure MPa	0.7 (≈100 psi, 7 bar)					
Min. working pressure MPa	0.12	0.06 (≈8.7 psi, 0.6 bar)		0.05 (≈7.3 psi, 0.5 bar)		
Proof pressure MPa	1.05 (≈150 psi, 10.5 bar)					
Ambient temperature °C	5 (41°F) to 60 (140°F)					
Port size	M5					Rc1/8
Stroke tolerance mm	+1.5 0					
Working piston speed mm/s	1 to 200					
Cushion	With rubber cushion					
Lubrication	Lubrication not possible					
Allowable absorbed energy J	0.012	0.036	0.1	0.1	0.19	0.5

Stroke

Bore size (mm)	Standard stroke (mm)	Min. stroke (mm)
ø 6	5, 10, 15, 20, 25, 30	5
ø10		
ø16		
ø20	5, 10, 15, 20, 25, 30, 40, 50	
ø25		
ø32		

*1: The custom stroke is available in 5 mm increments.

Min. stroke with switch

Bore size	1-color LED		2-color LED	
	K□H	K□V	K□YH	K□YV
ø 6	5		5	
ø10				
ø16				
ø20				
ø25				
ø32				

Switch specifications

● 1-color/2-color LED

Item	2-wire proximity		3-wire proximity			2-wire reed			
	K2H/K2V	K2YH/K2YV	K3H/K3V	K3PH/K3PV (Made to order)	K3YH/K3YV	K0H/K0V		K5H/K5V	
Applications	Dedicated for programmable controller		For programmable controller, relay			For programmable controller, relay		For programmable controller, relay, IC circuit (without indicator), serial connection	
Output method	-		NPN output	PNP output	NPN output	-			
Power supply voltage	-		10 to 28 VDC			-			
Load voltage	10 to 30 VDC		30 VDC or less			12 V/24 VDC	110 VAC	5/12/24 VDC	110 VAC
Load current	5 to 20 mA (*3)		50 mA or less			5 to 50 mA	7 to 20 mA	50 mA or less	20 mA or less
Indicator	LED (Lit when ON)	Red/green LED (Lit when ON)	LED (Lit when ON)	Yellow LED (Lit when ON)	Red/green LED (Lit when ON)	LED (Lit when ON)		-	
Leakage current	1 mA or less		10 μA or less			0 mA			
Weight g	1 m:18 3 m:49 5 m:80	1 m: 31 3 m: 85 5 m:139	1 m:18 3 m:49 5 m:80		1 m: 31 3 m: 85 5 m:139	1 m:18 3 m:49 5 m:80			

*1: Refer to Ending Page 1 for detailed switch specifications and dimensions.
*2: Switches other than the above models, such as switches with connectors, are also available. Refer to Ending Page 1.
*3: The max. load current is 20 mA at 25°C. The current is lower than 20 mA if the operating ambient temperature around the switch is higher than 25°C. (5 to 10 mA at 60°C)

Weight

Same as SMG Series (double acting/single rod). Refer to page 1387.

Dimensions

Same as SMG Series (double acting/single rod). Refer to page 1390.

Cylinder weight

(Unit: g)

Model No. / Bore size	Product weight when stroke S = 0 mm		Additional weight per S = 5 mm
	SMG-F double acting	SMG-LF double acting/with switch	
ø6	18	18	3
ø10	27	27	3
ø16	41	56	6
ø20	87	115	11
ø25	164	208	17
ø32	267	335	26

(Example) Product weight

SMG-LF-16-10-K2H-D
- Product weight for 0 mm stroke ····· 56 g
- Additional weight when S = 10 mm ····· 6 g x 10/5 = 12 g
- Weight of 2 cylinder switches ····· 18 g x 2 = 36 g
- Product weight ····· 56 g + 12 g + 36 g = 104 g

Theoretical thrust table

(Unit: N)

Bore size (mm)	Operating direction	Working pressure MPa							
		0.1	0.15	0.2	0.3	0.4	0.5	0.6	0.7
ø6	Push	-	4.24	5.65	8.48	11.3	14.1	17.0	19.8
	Pull	-	3.18	4.24	6.36	8.48	10.6	12.7	14.8
ø10	Push	7.85	11.8	15.7	23.6	31.4	39.3	47.1	55.0
	Pull	6.60	9.90	13.2	19.8	26.4	33.0	39.6	46.2
ø16	Push	20.1	30.2	40.2	60.3	80.4	1.01×10^2	1.21×10^2	1.41×10^2
	Pull	17.3	25.9	34.6	51.8	69.1	86.4	1.04×10^2	1.21×10^2
ø20	Push	31.4	47.1	62.8	94.2	1.26×10^2	1.57×10^2	1.88×10^2	2.20×10^2
	Pull	26.4	39.6	52.8	79.2	1.06×10^2	1.32×10^2	1.58×10^2	1.85×10^2
ø25	Push	49.1	73.6	98.2	1.47×10^2	1.96×10^2	2.45×10^2	2.95×10^2	3.44×10^2
	Pull	41.2	61.9	82.5	1.24×10^2	1.65×10^2	2.06×10^2	2.47×10^2	2.89×10^2
ø32	Push	80.4	1.21×10^2	1.61×10^2	2.41×10^2	3.22×10^2	4.02×10^2	4.83×10^2	5.63×10^2
	Pull	69.1	1.04×10^2	1.38×10^2	2.07×10^2	2.76×10^2	3.46×10^2	4.15×10^2	4.84×10^2

SCP*3
CMK2
CMA2
SCM
SCG
SCA2
SCS2
CKV2
CAV2/COVP/N2
SSD2
SSG
SSD
CAT
MDC2
MVC
SMG
MSD/MSDG
FC*
STK
SRL3
SRG3
SRM3
SRT3
MRL2
MRG2
SM-25
ShkAbs
FJ
FK
Spd Contr
Ending

How to order

No switch (without magnet for switch)

SMG-F - **32** ◯ - **25**

With switch (built-in magnet for switch)

SMG-LF - **32** ◯ - **25** - **K2H** - **R**

Ⓐ Model No.
Ⓑ Bore size
Ⓒ Port thread
Ⓓ Stroke
Ⓔ Switch model No.
Ⓕ Switch quantity

Code	Description
Ⓐ Model No.	
SMG-F	Double acting/fine speed
SMG-LF	Double acting/fine speed/with switch

Ⓑ Bore size (mm)	
6	ø6
10	ø10
16	ø16
20	ø20
25	ø25
32	ø32

Ⓒ Port thread	
Blank	Rc thread
NN	NPT thread (ø32 only)
GN	G thread (ø32 only)

Ⓓ Stroke (mm)		Applicable bore size					
		ø6	ø10	ø16	ø20	ø25	ø32
Standard stroke	5	●	●	●	●	●	●
	10	●	●	●	●	●	●
	15	●	●	●	●	●	●
	20	●	●	●	●	●	●
	25	●	●	●	●	●	●
	30	●	●	●	●	●	●
	40				●	●	●
	50				●	●	●

Ⓔ Switch model No.

Axial lead wire	Radial lead wire	Contact	Voltage AC	Voltage DC	Indicator	Lead wire
K0H*	**K0V***	Reed	●	●	1-color LED	2-wire
K5H*	**K5V***	Reed	●	●	No indicator lamp	2-wire
K2H*	**K2V***	Proximity		●	1-color LED	2-wire
K3H*	**K3V***	Proximity		●	1-color LED	3-wire
K3PH*	**K3PV***	Proximity		●	1-color LED (custom)	3-wire
K2YH*	**K2YV***	Proximity		●	2-color LED	2-wire
K3YH*	**K3YV***	Proximity		●	2-color LED	3-wire

*** Lead wire length**	
Blank	1 m (Standard)
3	3 m
5	5 m

Ⓕ Switch quantity	
R	1 on rod side
H	1 on head side
D	2

Precautions for model No. selection

*1: Refer to page 1400 for the min. stroke with switch.

[Example of model No.]

SMG-LF-6-15-K0H-R

Model: Compact cylinder

Ⓐ Model No. : Double acting/fine speed/with switch
Ⓑ Bore size : ø6 mm
Ⓒ Port thread : Rc thread
Ⓓ Stroke : 15 mm
Ⓔ Switch model No. : Reed switch K0H, Lead wire length 1 m
Ⓕ Switch quantity : 1 on rod side

How to order switch

SW - **K2H**

Switch model No. (Item Ⓔ above)

MEMO

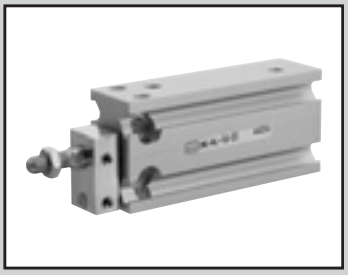

Compact cylinder double acting/rotation-stop

SMG-M Series

● Bore size: ø6/ø10/ø16/ø20/ø25/ø32

JIS symbol

Double acting/rotation-stop

RoHS

Specifications

1 MPa ≈ 145.0 psi, 1 MPa = 10 bar

Item	SMG-M SMG-ML (with switch)					
Bore size mm	ø6	ø10	ø16	ø20	ø25	ø32
Actuation	Double acting					
Working fluid	Compressed air					
Max. working pressure MPa	0.7 (≈100 psi, 7 bar)					
Min. working pressure MPa	0.15	0.10 (≈15 psi, 1 bar)		0.08 (≈12 psi, 0.8 bar)		
Proof pressure MPa	1.05 (≈150 psi, 10.5 bar)					
Ambient temperature °C	-10 (14°F) to 60 (140°F) (no freezing)					
Port size	M5					Rc1/8
Stroke tolerance mm	+1.5 0					
Working piston speed mm/s	50 to 500					
Cushion	With rubber cushion					
Lubrication	Not required (use turbine oil class 1 ISO VG32 if necessary for lubrication)					
Non-rotating accuracy *1	±0.8°			±0.5°		
Allowable torque N·m	0.008	0.025	0.088	0.17	0.33	0.67
Allowable absorbed energy J	0.012	0.036	0.1	0.1	0.19	0.5

*1: Initial value at the retracted end (excluding piston rod deflection).

Stroke

Bore size (mm)	Standard stroke (mm)	Min. stroke (mm)
ø 6	5, 10, 15, 20, 25, 30, 40, 50, 60	5
ø10		
ø16		
ø20	5, 10, 15, 20, 25, 30, 40, 50, 60, 70, 80, 90, 100	
ø25		
ø32		

*1: The custom stroke is available in 5 mm increments.

Min. stroke with switch

Bore size	1-color LED		2-color LED	
	K □ H	K □ V	K □ YH	K □ YV
ø 6	5		5	
ø10				
ø16				
ø20				
ø25				
ø32				

Switch specifications

● 1-color/2-color LED

Item	2-wire proximity		3-wire proximity			2-wire reed			
	K2H/K2V	K2YH/K2YV	K3H/K3V	K3PH/K3PV (Made to order)	K3YH/K3YV	K0H/K0V		K5H/K5V	
Applications	Dedicated for programmable controller		For programmable controller, relay			For programmable controller, relay		For programmable controller, relay, IC circuit (without indicator), serial connection	
Output method	-		NPN output	PNP output	NPN output	-			
Power supply voltage	-		10 to 28 VDC			-			
Load voltage	10 to 30 VDC		30 VDC or less			12 V/24 VDC	110 VAC	5/12/24 VDC	110 VAC
Load current	5 to 20 mA (*1)		50 mA or less			5 to 50 mA	7 to 20 mA	50 mA or less	20 mA or less
Indicator	LED (Lit when ON)	Red/green LED (Lit when ON)	LED (Lit when ON)	Yellow LED (Lit when ON)	Red/green LED (Lit when ON)	LED (Lit when ON)		-	
Leakage current	1 mA or less		10 μA or less			0 mA			
Weight g	1 m:18 3 m:49 5 m:80	1 m: 31 3 m: 85 5 m:139	1 m:18 3 m:49 5 m:80		1 m: 31 3 m: 85 5 m:139	1 m:18 3 m:49 5 m:80			

*1: Refer to Ending Page 1 for detailed switch specifications and dimensions.
*2: Switches other than the above models, such as switches with connectors, are also available. Refer to Ending Page 1.
*3: The max. load current is 20 mA at 25°C. The current is lower than 20 mA if the operating ambient temperature around the switch is higher than 25°C. (5 to 10 mA at 60°C)

Cylinder weight

(Unit: g)

Model No. / Bore size	Product weight when stroke S = 0 mm		Additional weight per S = 5mm
	SMG-M Double acting/rotation-stop	SMG-ML Double acting/rotation-stop/switch	
ø6	23	23	3
ø10	33	33	3
ø16	51	66	6
ø20	106	134	12
ø25	197	241	18
ø32	329	397	27

(Example) Product weight

SMG-ML-16-10-K2H-D
- Product weight for 0 mm stroke ····· 66 g
- Additional weight when S = 10 mm ····· 6 g x 10/5 = 12 g
- Weight of 2 cylinder switches ····· 18 g x 2 = 36 g
- Product weight ····· 66 g + 12 g + 36 g = 114 g

Theoretical thrust table

(Unit: N)

Bore size (mm)	Operating direction	Working pressure MPa							
		0.1	0.15	0.2	0.3	0.4	0.5	0.6	0.7
ø6	Push	-	4.24	5.65	8.48	11.3	14.1	17.0	19.8
	Pull	-	3.18	4.24	6.36	8.48	10.6	12.7	14.8
ø10	Push	7.85	11.8	15.7	23.6	31.4	39.3	47.1	55.0
	Pull	6.60	9.90	13.2	19.8	26.4	33.0	39.6	46.2
ø16	Push	20.1	30.2	40.2	60.3	80.4	1.01×10^2	1.21×10^2	1.41×10^2
	Pull	17.3	25.9	34.6	51.8	69.1	86.4	1.04×10^2	1.21×10^2
ø20	Push	31.4	47.1	62.8	94.2	1.26×10^2	1.57×10^2	1.88×10^2	2.20×10^2
	Pull	26.4	39.6	52.8	79.2	1.06×10^2	1.32×10^2	1.58×10^2	1.85×10^2
ø25	Push	49.1	73.6	98.2	1.47×10^2	1.96×10^2	2.45×10^2	2.95×10^2	3.44×10^2
	Pull	41.2	61.9	82.5	1.24×10^2	1.65×10^2	2.06×10^2	2.47×10^2	2.89×10^2
ø32	Push	80.4	1.21×10^2	1.61×10^2	2.41×10^2	3.22×10^2	4.02×10^2	4.83×10^2	5.63×10^2
	Pull	69.1	1.04×10^2	1.38×10^2	2.07×10^2	2.76×10^2	3.46×10^2	4.15×10^2	4.84×10^2

SCP*3
CMK2
CMA2
SCM
SCG
SCA2
SCS2
CKV2
CAV2/COVP/N2
SSD2
SSG
SSD
CAT
MDC2
MVC
SMG
MSD/MSDG
FC*
STK
SRL3
SRG3
SRM3
SRT3
MRL2
MRG2
SM-25
ShkAbs
FJ
FK
Spd Contr
Ending

How to order

No switch (without magnet for switch)

SMG-M - 32 ◯ - 25

With switch (built-in magnet for switch)

SMG-ML - 32 ◯ - 25 - K2H - R

Ⓐ Model No.
Ⓑ Bore size
Ⓒ Port thread
Ⓓ Stroke
Ⓔ Switch model No.
Ⓕ Switch quantity

Code	Description
Ⓐ Model No.	
SMG-M	Double acting/rotation-stop
SMG-ML	Double acting/rotation-stop/with switch

Ⓑ Bore size (mm)	
6	ø6
10	ø10
16	ø16
20	ø20
25	ø25
32	ø32

Ⓒ Port thread	
Blank	Rc thread
NN	NPT thread (ø32 only) (made-to-order product)
GN	G thread (ø32 only) (made-to-order product)

Ⓓ Stroke (mm)		Applicable bore size					
		ø6	ø10	ø16	ø20	ø25	ø32
Standard stroke	5	●	●	●	●	●	●
	10	●	●	●	●	●	●
	15	●	●	●	●	●	●
	20	●	●	●	●	●	●
	25	●	●	●	●	●	●
	30	●	●	●	●	●	●
	40	●	●	●	●	●	●
	50	●	●	●	●	●	●
	60	●	●	●	●	●	●
	70				●	●	●
	80				●	●	●
	90				●	●	●
	100				●	●	●

Ⓔ Switch model No.

Axial lead wire	Radial lead wire	Contact	Voltage AC	Voltage DC	Indicator	Lead wire
K0H*	**K0V***	Reed	●	●	1-color LED	2-wire
K5H*	**K5V***		●	●	No indicator lamp	
K2H*	**K2V***	Proximity		●	1-color LED	2-wire
K3H*	**K3V***			●		3-wire
K3PH*	**K3PV***			●	1-color LED (custom)	3-wire
K2YH*	**K2YV***			●	2-color LED	2-wire
K3YH*	**K3YV***			●		3-wire

*** Lead wire length**	
Blank	1 m (Standard)
3	3 m
5	5 m

Ⓕ Switch quantity	
R	1 on rod side
H	1 on head side
D	2

Precautions for model No. selection

*1: Refer to page 1404 for the min. stroke with switch.
*2: Copper and PTFE free as standard.

[Example of model No.]

SMG-ML-6-15-K0H-R

Model: Compact cylinder

Ⓐ Model No. : Double acting/rotation-stop/with switch
Ⓑ Bore size : ø6 mm
Ⓒ Port thread : Rc thread
Ⓓ Stroke : 15 mm
Ⓔ Switch model No. : Reed switch K0H, Lead wire length 1 m
Ⓕ Switch quantity : 1 on rod side

How to order switch

SW - K2H

Switch model No. (Item Ⓔ above)

Internal structure and parts list

● SMG-M-6/10 (double acting/rotation-stop)
● ø6/ø10

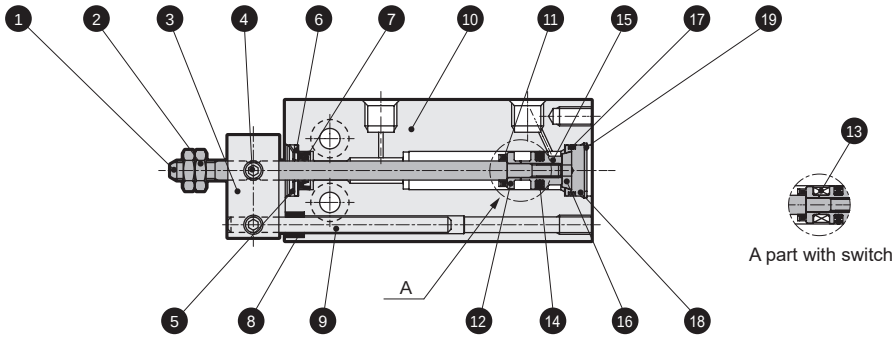

● SMG-M-16 to 32 (double acting/rotation-stop)
● ø16 to ø32

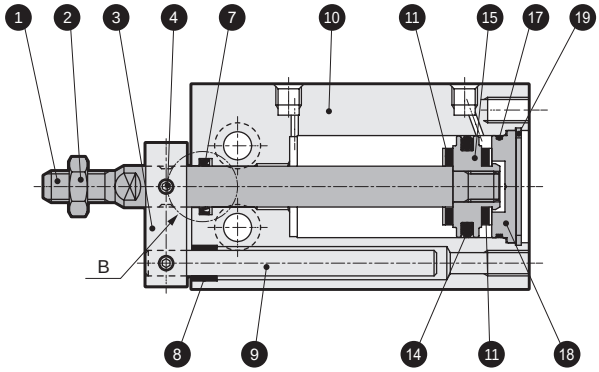

● SMG-ML-16 to 32 (double acting/rotation-stop/with switch)
● ø16 to ø32

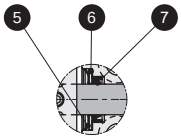

B part ø16

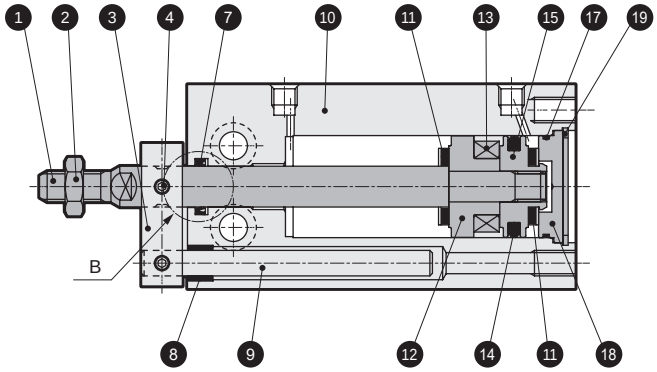

No.	Part name	Material	Remarks
1	Piston rod	Stainless steel	ø20, 25, 32 Industrial chrome plating
2	Rod nut	Steel	Nickeling
3	Rotation-stop plate	Aluminum alloy	Chromate
4	Hexagon socket set screw	Stainless steel	
5	CR type snap ring	Stainless steel	
6	Cap	Stainless steel	
7	Rod packing	Nitrile rubber	
8	Rotation-stop bush	Acetal resin	
9	Guide bar	Stainless steel	ø32 Industrial chrome plating
10	Body	Aluminum alloy	Hard alumite

No.	Part name	Material	Remarks
11	Cushion rubber R	Urethane rubber	
12	Spacer	Aluminum alloy	Chromate
13	Magnet	-	
14	Piston packing	Nitrile rubber	
15	Piston	Aluminum alloy	Chromate
16	Cushion rubber H	Urethane rubber	
17	Cover gasket	Nitrile rubber	
18	Cover	Aluminum alloy	Chromate
19	C-snap ring	Steel	Zinc phosphate

Repair parts list

Bore size (mm)	Kit No.	Repair parts No.
ø6	SMG-6K	5 7 11 14 16 17
ø10	SMG-10K	
ø16	SMG-16K	

Bore size (mm)	Kit No.	Repair parts No.
ø20	SMG-20K	7 11 14 16 17
ø25	SMG-25K	
ø32	SMG-32K	

SCP*3
CMK2
CMA2
SCM
SCG
SCA2
SCS2
CKV2
CAV2/COVP/N2
SSD2
SSG
SSD
CAT
MDC2
MVC
SMG
MSD/MSDG
FC*
STK
SRL3
SRG3
SRM3
SRT3
MRL2
MRG2
SM-25
ShkAbs
FJ
FK
Spd Contr
Ending

Dimensions

● Double acting/rotation-stop (with switch)/SMG-M (L)

● ø6/ø10

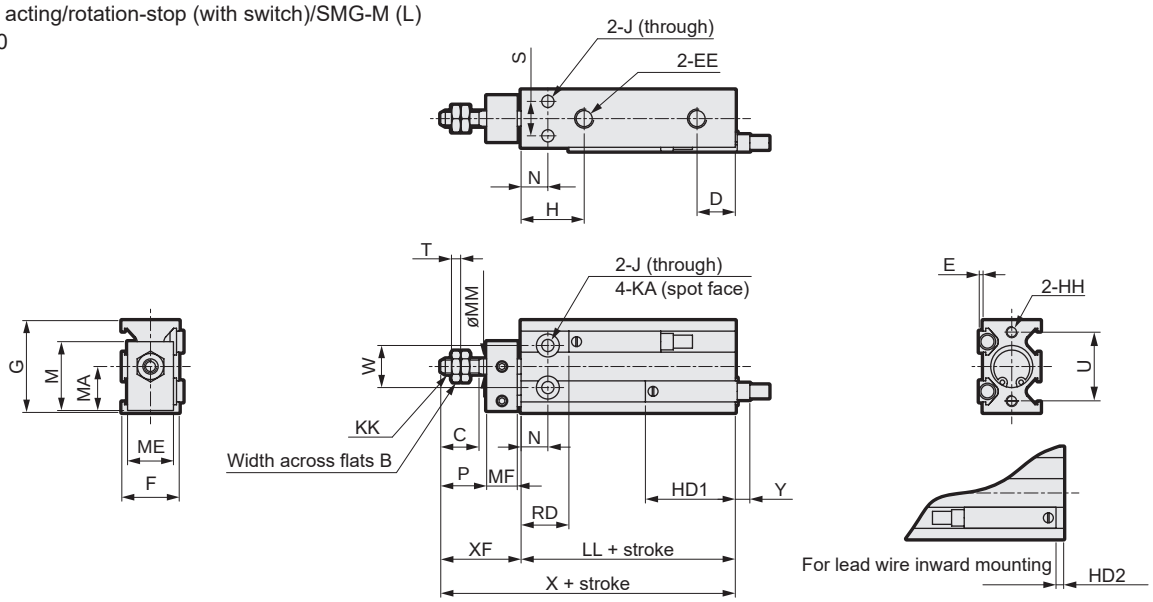

● ø16/ø20/ø25/ø32

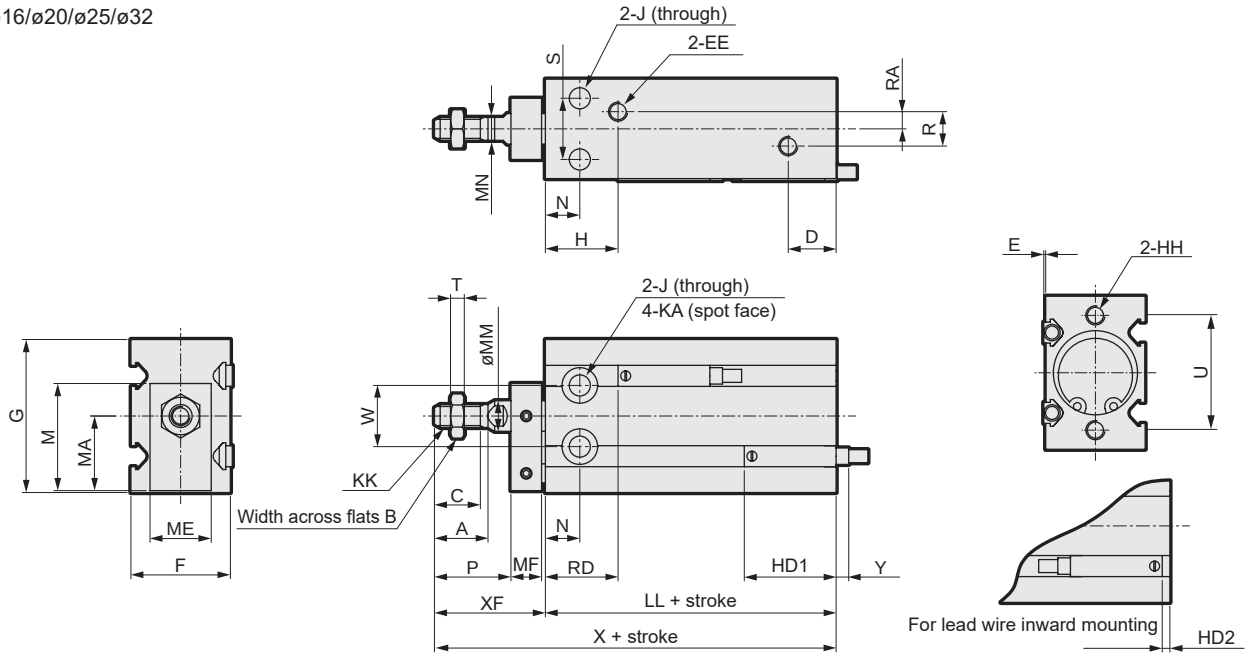

Code / Bore size	A	B	C	D	EE	F	G	H	HH	J	KA	KK	M	MA	ME	MF	MM	MN	N	P	R	RA
ø6	-	5.5	7	10	M5	13	22	15	M3 depth 5	3.2	6 depth 4.8	M3	16	10.5	11	8	3	-	7	9	-	-
ø10	-	7	10	10	M5	15	24	16.5	M3 depth 5	3.2	6 depth 5	M4	18	11.5	12	8	4	-	7	12	-	-
ø16	12.5	8	11	11.5	M5	20	32	(*1) 16.5	M4 depth 6	4.5	7.5 depth 6.5	M5	22	15.5	13	8	6	5	7	17	4	2
ø20	14	10	12	12.5	M5	26	40	19	M5 depth 8	5.5	9 depth 8	M6	28	19.5	16	8	8	6	9	20	9	4.5
ø25	18	13	15.5	13	M5	32	50	21.5	M5 depth 8	5.5	9 depth 9	M8	35	24.5	20	10	10	8	10	22	9	4.5
ø32	22	17	19.5	12.5	Rc1/8	40	62	23	M6 depth 9	6.6	11 depth 11.5	M10x1.25	42.5	30.5	24	12	12	10	11	29	13.5	4.5

Code / Bore size	S	T	U	W	XF	LL		X		E	HD1	HD2	RD	Y
						No switch	With switch	No switch	With switch					
ø6	7	1.8	17	10	18	33	33	51	51	1	20	1	13	7
ø10	9	2.4	18	11	21	36	36	57	57	1	23.5	4.5	12.5	3.5
ø16	12	3.2	25	14	26	30	40	56	66	0.5	24.5	5.5	15.5	2.5
ø20	16	3.6	30	16	29	36	46	65	75	0.5	27	8	19	0
ø25	20	5	38	20	33	40	50	73	83	0.5	29	10	21	-2
ø32	24	6	48	24	42	42	52	84	94	0.5	30.5	11.5	21.5	-3.5

*1 : 14.5 for 5 stroke without switch
*2 : Y dimensions indicate the protruding dimensions from the end surface of the switch body. (Negative dimensions indicate the pull dimensions from the end surface of the body)
*3 : To calculate LL+ stroke or X+ stroke when using custom stroke, apply the next longer standard stroke (instead of the custom stroke) to the stroke value. (Example: If the custom stroke is 35 mm, apply the standard stroke of 40 mm)
*4 : Refer to page 1409 for HD, RD, and protruding dimensions of 2-color LED switches.

SMG Series with switch common dimensions (2-color LED)

● SMG-L (with switch: K2Y$^{H}/_{V}$, K3Y$^{H}/_{V}$)
-XL
-YL
-ML
-LF

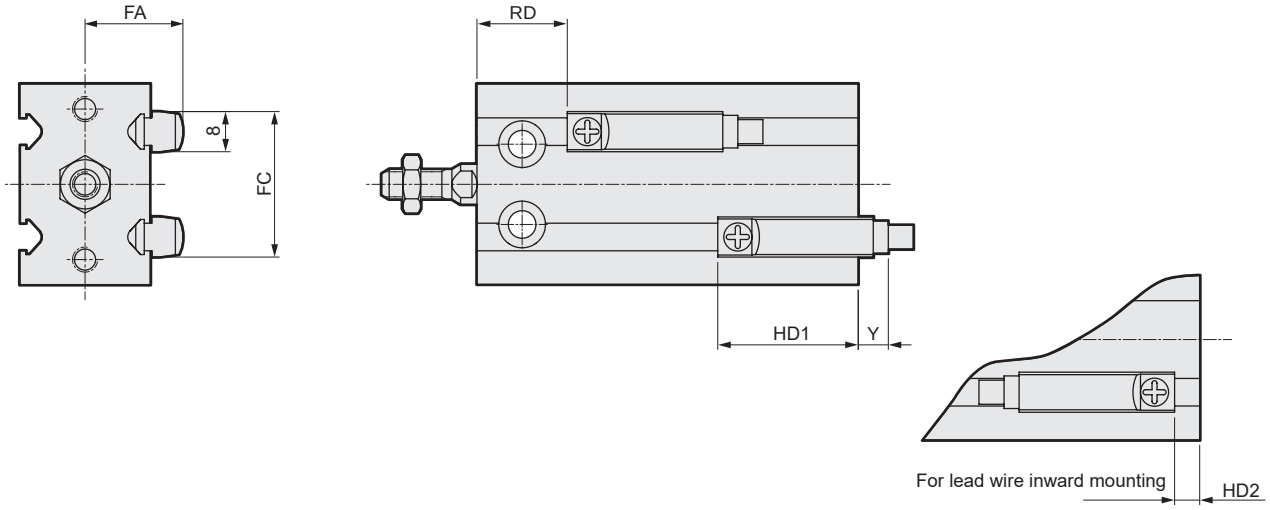

Code / Bore size	FA	FC	Double acting, double acting/fine speed (F), double acting/rotation-stop (M)					Single acting/push (X)						Single acting/pull (Y)								
			HD1	HD2	RD	Y		HD1	HD2	RD		Y		HD1		HD2		RD	Y (*1)			
						Axial lead wire	Radial lead wire			5, 10st.	15st.	Axial lead wire	Radial lead wire	5, 10st.	15st.	5, 10st.	15st.		5, 10st.		15st.	
																			Axial lead wire	Radial lead wire	Axial lead wire	Radial lead wire
ø6	13.5	18	21	0	12	13	10	22.5	1.5	10.5	10.5	11.5	8.5	23.5	23.5	2.5	2.5	9.5	10.5	7.5	10.5	7.5
ø10	14.5	21	24.5	3.5	11.5	9.5	6.5	24.5	3.5	11.5	16.5	9.5	6.5	23.5	28.5	2.5	7.5	12.5	10.5	7.5	5.5	2.5
ø16	16.5	27	25.5	4.5	14.5	8.5	5.5	25.5	4.5	14.5	19.5	8.5	5.5	25.5	30.5	4.5	9.5	14.5	8.5	5.5	3.5	0.5
ø20	19.5	29	28	7	18	6	3	28	7	18	23	6	3	28	33	7	12	18	6	3	1	-2
ø25	22.5	32	30	9	20	4	1	30	9	20	25	4	1	30	35	9	14	20	4	1	-1	-4
ø32	26.5	34	31.5	10.5	20.5	2.5	-0.5	31.5	10.5	20.5	25.5	2.5	-0.5	31.5	36.5	10.5	15.5	20.5	2.5	-0.5	-2.5	-5.5

*1: Y dimensions indicate the protruding dimensions from the end surface of the switch body. (Negative dimensions indicate the pull dimensions from the end surface of the body)

SCP*3
CMK2
CMA2
SCM
SCG
SCA2
SCS2
CKV2
CAV2/COVP/N2
SSD2
SSG
SSD
CAT
MDC2
MVC
SMG
MSD/MSDG
FC*
STK
SRL3
SRG3
SRM3
SRT3
MRL2
MRG2
SM-25
ShkAbs
FJ
FK
Spd Contr
Ending

Guide to compact cylinder SMD2 compatibility

SMD2 Series models have been changed to SMG Series from October 2015.
Since some of the mounting set for SMD2 do not exist for SMG,
compatible devices are provided to support such mounting. (Made-to-order product)
If you need these mounting while using SMD2 at this time, contact CKD.

Mounting	SMD2 compatible dimensions	
	Double acting/single acting/fine speed	Rotation-stop
DA	Supported with SMG standard products. SMD2 compatible mounting. However, the total length is shorter.	
DB		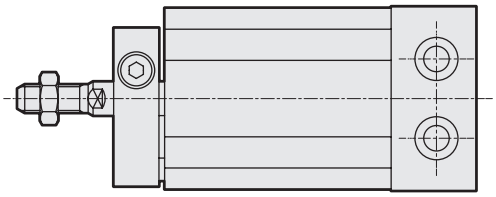
DC	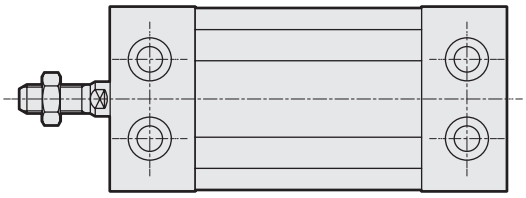	

■ Other guides

(1) Specification values

Note that there is a change in spring load value of single acting/push and single acting/pull in SMD2 compatible dimensions.

(2) Dimensions

Some port positions are changed.

* Check with CKD for details.

MEMO

Safety Precautions

Be sure to read this section before use.

Refer to Intro Page 73 for general information of the cylinder, and to Intro Page 80 for general information of the cylinder switch.

Product-specific cautions: Compact cylinder SMG Series

Design/selection

1. Common

CAUTION

The min. working pressure in the specifications column indicates the initial value.

Depending on the conditions of use or duration of use, the specifications may be exceeded. When using around the min. working pressure, consult with CKD.

1. Fine speed SMG-F

CAUTION

■ Use without lubrication.

Applying lubrication may cause changes in characteristics.

■ Assemble the speed controller near the cylinder.

When installed far from the cylinder, the speed becomes unstable. For the speed controller, SC-M3/M5-F, SCD-M3/M5-F Series are recommended.

■ In general, the speed is stabler at higher air pressure and lower load factor.

Use at a 50% or less load factor.

■ Stable speed control is achieved with a meter-out circuit.

When fine speed activation is performed with operating direction PUSH for the single rod cylinder, the popping out phenomenon occurs when operation starts if the load resistance is low. For countermeasures, use the ⓑ, ⓒ, or ⓓ circuit. Note that circuit ⓓ is the most stable.

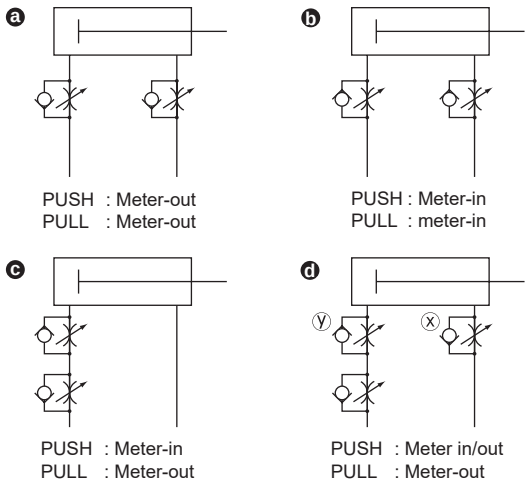

Speed adjustment method for PUSH operation of ⓓ circuit:

1. Set the speed with the speed controller x.
2. Restrict the speed with the speed controller y until there is no popping out.
3. Check the speed again.

(*1) When compared to ⓑ ⓒ ⓓ the circuit ⓓ is the most stable.

(*2) For vertical mounting, combine the cylinder with a meter-out circuit, as it will fall under its own weight when a meter-in circuit is used.

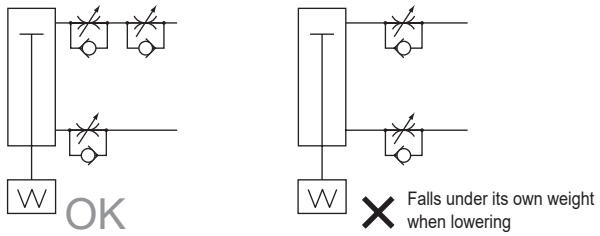

(*3) Use the circuit shown in the figure below for the serial connection of the speed controllers.

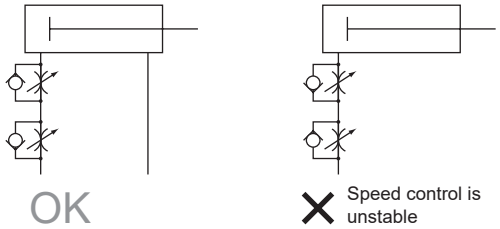

(Guidelines for pop-out generation)

Popping out occurs in the following cases.

· Thrust > Resistance

* Resistance: Thrust caused by residual pressure on the exhaust side (in the fine speed, suction pressure = residual pressure) + { When using horizontally: frictional force caused by load / When using vertically: load self-weight

■ Do not apply a lateral load to the cylinder.

With a lateral load, operation will become unstable.

■ Avoid using this product where vibration is present.

The product will be adversely affected by vibration and operation will become unstable.

Mounting, installation and adjustment

1 . Common

⚠ CAUTION

■The cylinder switch may malfunction if there is a magnetic substance such as a metal plate installed adjacently. Check that a distance of 3.5mm is provided from the surface of the cylinder switch.
(Same for all bore sizes)

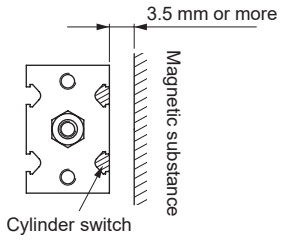

■The cylinder switch may malfunction when cylinders are installed adjacently. In order to prevent switch malfunctions, provide a mounting pitch of the value in the table below and over.

(Unit: mm)

Conditions of side-by-side installation			Switch model No.	ø6	ø10	ø16	ø20	ø25	ø32	Remarks
Two cylinders in parallel	• Horizontal mounting 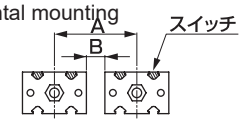	A	K0, K5	27	29	37	45	55	67	
			K2, K3							
		B	K0, K5	4.5						
			K2, K3							
	• Vertical mounting Next to switch cylinder side Mounting on 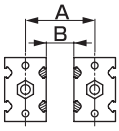	A	K0, K5	28	21	25	33	41	46	Note that switch position cannot be adjusted if the length of the screwdriver is longer than B dimension with cylinders mounted.
			K2, K3	25	28	35	40	50	55	
		B	K0, K5	5.5	5.5	5.5	6.5	8.5	5.5	
			K2, K3	11.5	12.5	14.5	14.5	17.5	14.5	
	• Vertical mounting Switch on side Cylinder Opposite side 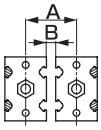	A	K0, K5	14	16	21	27	33	41	
			K2, K3							
		B	K0, K5	0.5						
			K2, K3							
3 or more cylinders in parallel	• Horizontal mounting 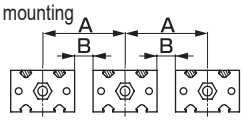	A	K0, K5	27	29	37	45	55	67	
			K2, K3							
		B	K0, K5	4.5						
			K2, K3							
	• Vertical mounting 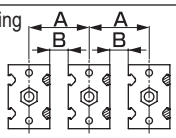	A	K0, K5	19	22	26	34	42	47	Note that switch position cannot be adjusted if the length of the screwdriver is longer than B dimension with cylinders mounted.
			K2, K3	27	29	35	44	51	56	
		B	K0, K5	6.5	6.5	6.5	7.5	9.5	6.5	
			K2, K3	13.5	13.5	14.5	17.5	18.5	15.5	

■Depending on the stroke or mounting method, applicable piping fittings are limited. Therefore, use the recommended fittings as below.

Fig. 1

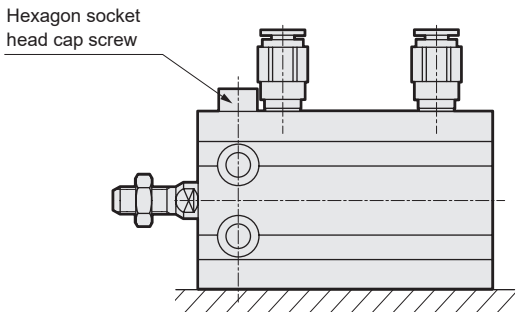

Item / Bore size	Port size	Recommended fittings	Item / Bore size	Port size	Recommended fittings
6	M5	SC3W-M5-4,6 SC3U-M5-4,6 GWS4-M5 GWS6-M5 (*1) GWS4,6-M5-S GWL4-M5 GWL6-M5 (*1)	20	M5	SC3W-M5-4,6 SC3U-M5-4,6 GWS4-M5 GWS6-M5 (*1) GWS4,6-M5-S GWL4-M5 GWL6-M5 (*1)
10	M5	SC3W-M5-4,6 SC3U-M5-4,6 GWS4,6-M5 GWS4,6-M5-S GWL4,6-M5	25	M5	SC3W-M5-4,6 SC3U-M5-4,6 GWS4,6-M5 GWS4,6-M5-S GWL4,6-M5
16	M5	SC3W-M5-4,6 SC3U-M5-4,6 GWS4-M5 (*1) GWS6-M5 (*2) GWS4-M5-S GWS6-M5-S (*1) GWL4-M5 (*1) GWL6-M5 (*2)	32	Rc1/8	SC3W-6-4,6,8 SC3U-6-4,6,8 GWS 4,6,8-6 GWS4,6,8-6-S GWL4,6,8-6

*1) Excluding 5 stroke or mounting method in "Fig. 1".
*2) Excluding 5 or 10 strokes or mounting method in "Fig. 1".

■ When mounting the body with the through bolt, tighten with tightening torque as shown in the table below.

Bore size	Bolt used	Tightening torque
ø6/10	M3	0.6 to 1.1 N·m
ø16	M4	1.5 to 2.7 N·m
ø20/25	M5	3.0 to 5.4 N·m
ø32	M6	5.2 to 9.2 N·m

2. Single acting SMG-X/Y

⚠ CAUTION

■ Do not leave the single acting cylinder pressurized.
If it is left pressurized for long periods, the piston rod may not return due to spring load when the pressure is released.

3. Fine speed SMG-F

⚠ CAUTION

■ Perform adjustment such as centering so that a lateral load is not applied to the cylinder.
In addition, install and adjust the sliding guide to avoid twisting.
- When the load or the resistance fluctuates, operation becomes unstable.
- With a large difference between static friction and kinematic friction of the guide, operation becomes unstable.

4. Rotation-stop SMG-M

⚠ CAUTION

■ When attaching load to the piston rod, do not apply more torque than the allowable torque.

Use/maintenance

1. Rotation-stop SMG-M

⚠ CAUTION

■ Do not put your fingers into the gap between the rotation-stop plate and the rotation-stop cylinder tube.
Never put your fingers through the gap because fingers may be pinched between the rotation-stop plate and the cylinder tube while the piston rod is pulled.

■ Do not apply rotation torque to the piston rod.
If by any chance torque is applied due to the shape of the jig, use without exceeding the allowable torque.

■ After maintenance, when connecting the piston rod and rotation-stop plate, fasten with hexagon socket set screws, applying the tightening torque given in the table below.

Bore size	Applicable hexagon socket set screw	Tightening torque
ø6/10/16	M3	0.6 N·m
ø20/25	M4	1.4 N·m
ø32	M5	4.2 N·m

MSD/MSDG

Small compact cylinder

ø6/ø8/ø12/ø16

Space saving structure

Overview

Small bore size series for compact cylinder (SSD) Bore size is from ø6 to ø16. Type with high precision guide (MSDG) is also available.

Features

Axial direction length is reduced.
Mounting space is reduced.

Design with long service life 4 times greater than conventional.

Abrasion resistance is improved.
Oil-impregnated copper alloy bearing is adopted for bearing section.

Piping can be selected from 2 directions of body side surface and bottom surface. Can be mounted directly from 3 directions.

CONTENTS

Product introduction	1416
Series variation	1418
Applications	1420
Variation and option combination selection table	1421
● Double acting/single rod (MSD)	1422
● Single acting/push (MSD-X)	1430
● Single acting/pull (MSD-Y)	1430
● Double acting/high load (MSD-K)	1440
● Double acting/single rod/fine speed (MSD-F)	1450
● Double acting/high load/fine speed (MSD-KF)	1450
● Double acting/guided/with switch (MSDG-L)	1452
● Double acting/guided/with switch/fine speed (MSDG-LF)	1462
Selection guide	1464
Technical data	1467
⚠ Safety precautions	1470

Axial space saving equipped with high precision guide.

Axial space saving

Axial direction length is reduced.
Mounting space can be reduced.

Design with long service life (approx. 4 times greater than the conventional)

Oil-impregnated copper alloy bearing is adopted for rod bearing section to increase abrasion resistance.

Piping direction can be selected

Piping can be selected from 2 directions: body side surface and bottom surface (rear common port).

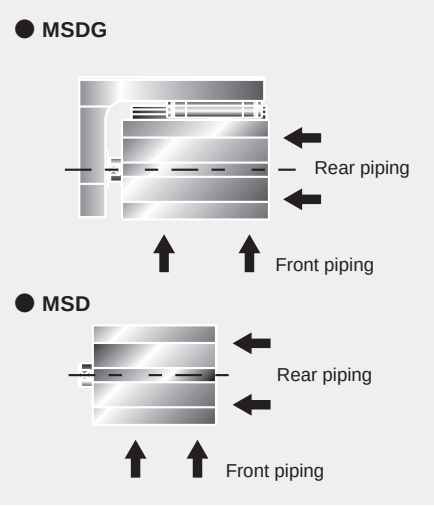

Equipped with F Series with miniature switch

With a compact size of ø6/ø8, with switch is realized.

Direct mounting from 3 faces

As a square body is adopted, it can be directly mounted from any direction. Mounting to the body top surface and bottom surface can be done with through bolt and tapped hole.
In addition, body side surface mounting is now also possible through the adoption of a rear common port.

High precision/high rigidity achieved by saving space

With high precision guide

MSDG Series

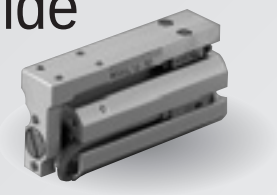

Axial space saving with guide

Short axial length MSD Series equipped with high precision guide.
Caters to the high-precision/high-rigidity needs of confined spaces.

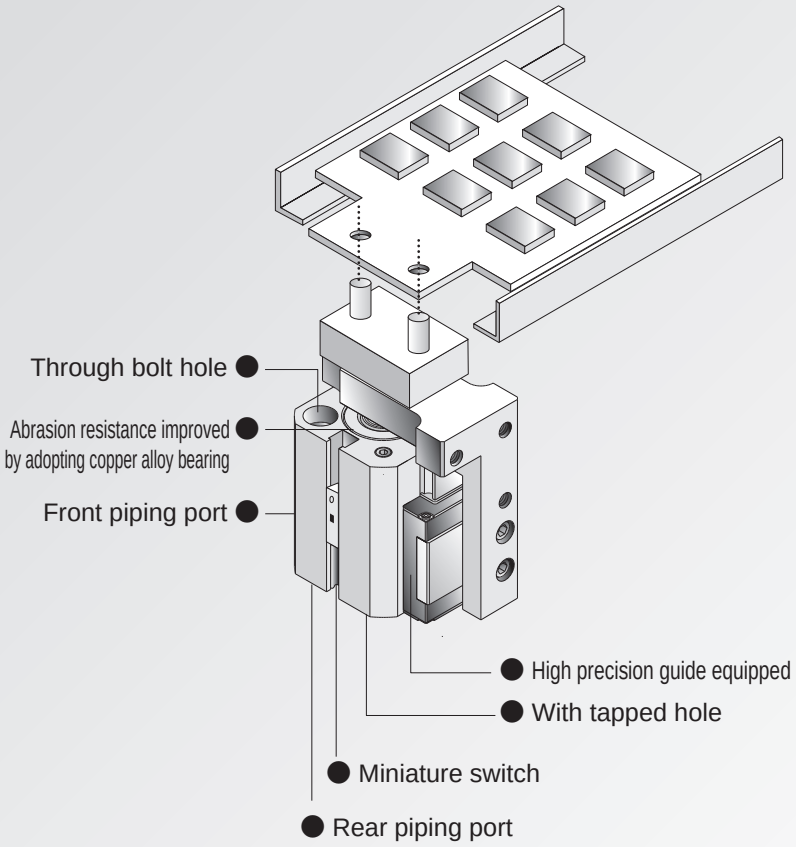

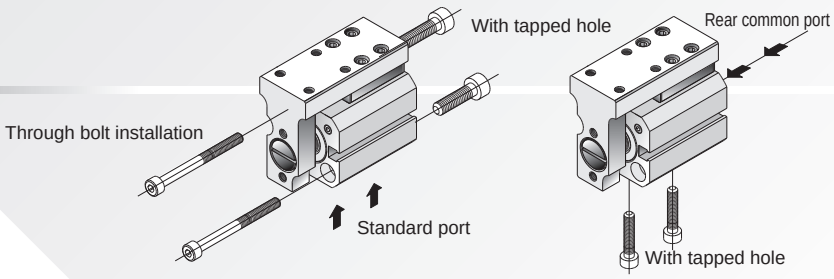

ø6, ø8 added to the compact cylinder

MSD Series

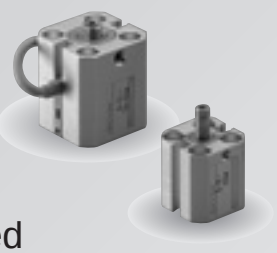

Axial space saving achieved

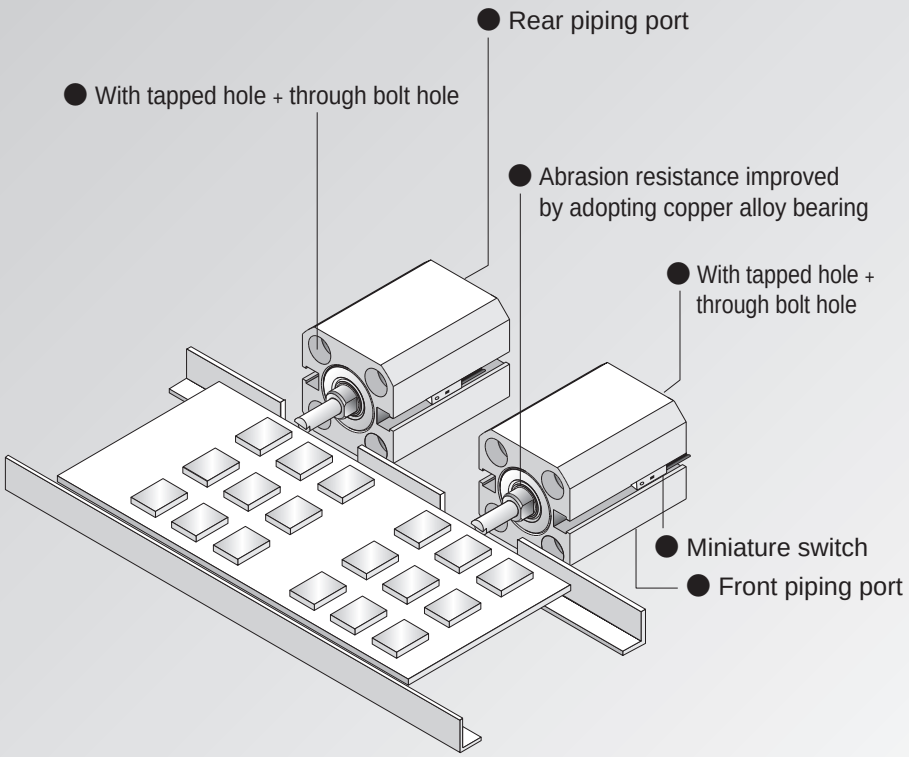

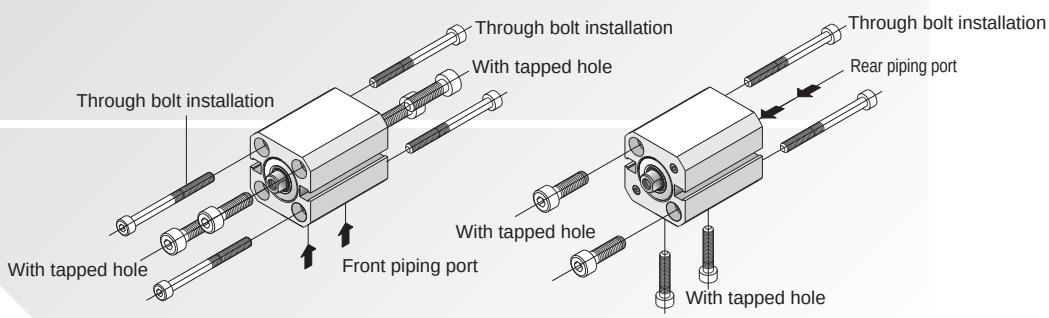

Series variation

Small compact cylinder MSD/MSDG Series

Variation	Model No.	Bore size (mm)	Standard stroke (mm)						
			5	10	15	20	25	30	
Double acting/ single rod with switch	MSD MSD-L 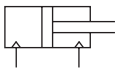	ø6/ø8	●	●	●	●	●	●	
Single acting/ push with switch	MSD-X MSD-XL 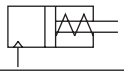	ø6/ø8	●	●					
Single acting/ pull with switch	MSD-Y MSD-YL 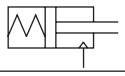	ø6/ø8	●	●					
Double acting/ high load with switch	MSD-K MSD-KL 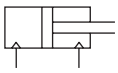	ø6/ø8 ø12/ø16	●	●	●	●	●	●	
Double acting/single rod fine speed with switch	MSD-F MSD-LF 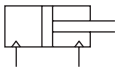	ø6/ø8	●	●	●	●	●	●	
High load/ fine speed with switch	MSD-KF MSD-KLF 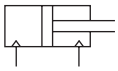	ø6/ø8	●	●	●	●	●	●	
		ø12/ø16	●	●	●	●	●	●	
Double acting/ guided	MSDG-L 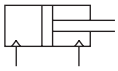	ø6/ø8 ø12/ø16	●	●	●	●	●	●	
Double acting/ guided/ fine speed	MSDG-LF 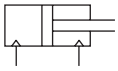	ø12/ø16	●	●	●	●	●	●	

●: Standard, ◎: Option, ▒ : Not available

	Min. stroke (mm)	Max. stroke (mm)	Option Rear piping R	Switch	Page
	5	30	◎	◎	1422
	5	10	◎	◎	1430
	5	10	◎	◎	1430
	5	30	◎	◎	1440
	5	30		◎	1450
	5	30	◎	◎	1450
	5	30	◎	◎	1452
	5	30	◎	◎	1462

Applications

Sorting of good/defective products

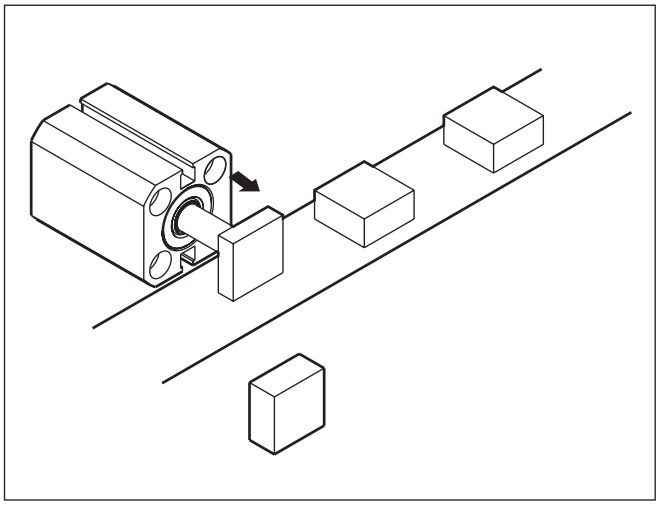

Clamp

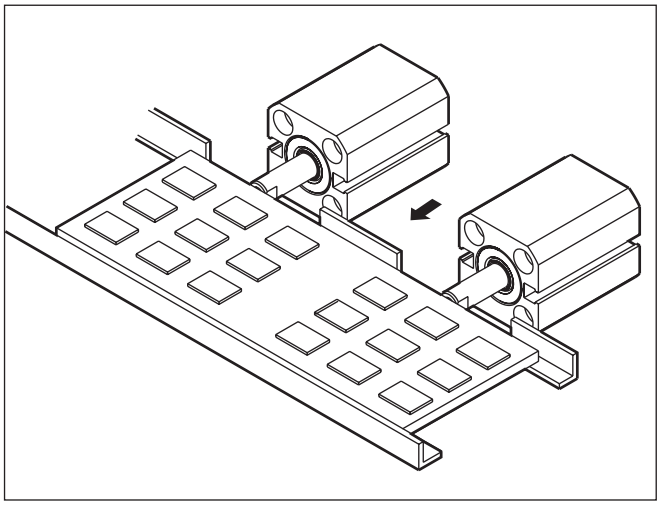

Positioning of pallet/stopper

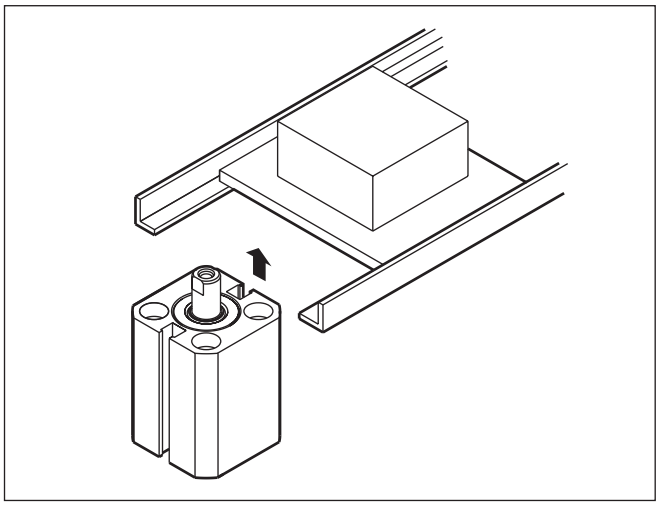

Note: Consult with CKD when using the product as stopper.

Conveying workpieces

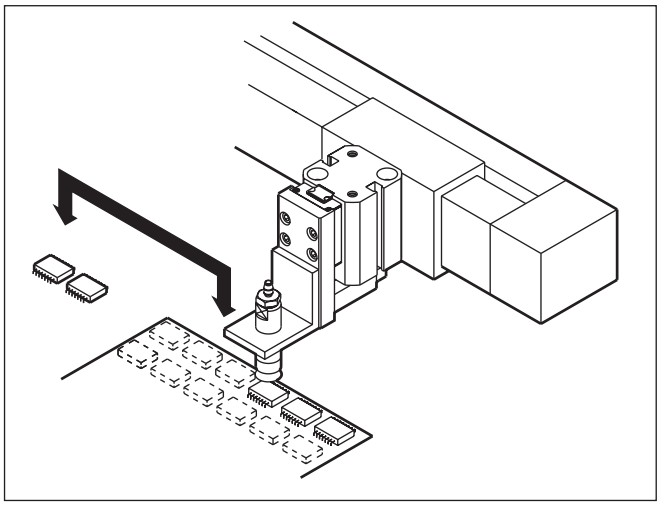

Positioning using pin hole

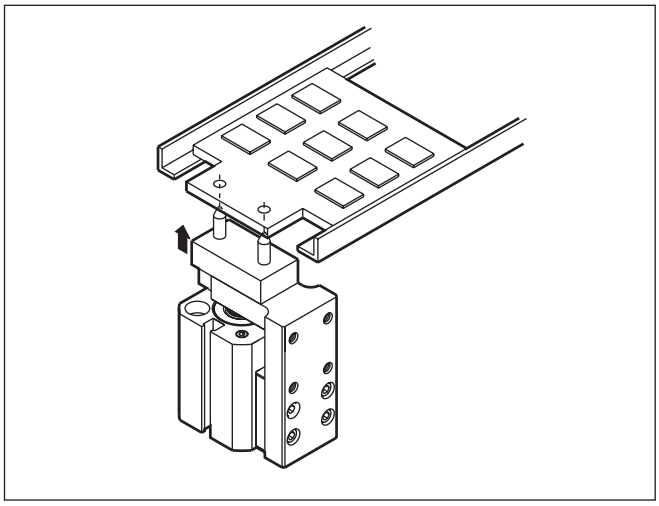

Compact parts-feeding

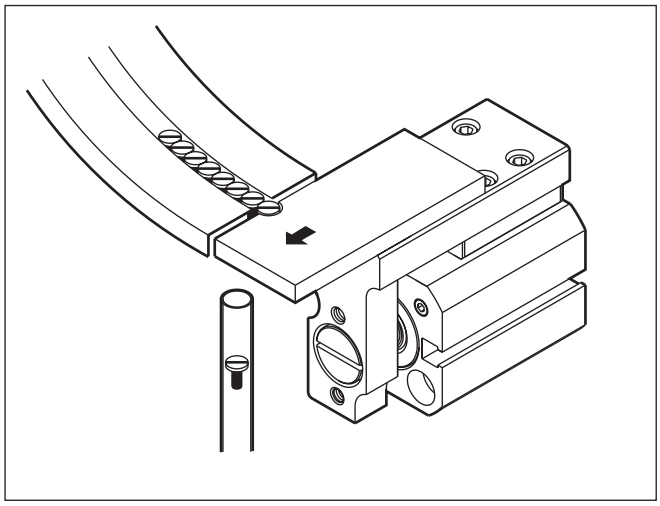

Variation and option combination selection table

● MSD Series

◎: Option
○: Available (made-to-order product)
△: Available depending on conditions
x: Not available

		Category	Variation						Option	
			Double acting/single rod	High load	Single acting/push	Single acting/pull	With cylinder switch	Fine speed	Rear piping	
		Code	None	K	X	Y	L	F	R	
Variation	Double acting/single rod	Blank							◎	
	High load	K			x	x	◎	◎	◎	
	Single acting/push	X				x	◎	x	◎	
	Single acting/pull	Y					◎	x	◎	
	With cylinder switch	L						◎	◎	
	Fine speed	F							◎	
Option	Rear common port	R								
Accy.	Cylinder switch	Listed separately	◎	◎	◎	◎	◎	◎	◎	

● Guided MSDG series

◎: Option
○: Available (made-to-order product)
△: Available depending on conditions
x: Not available

		Category	Variation			Port thread			Option	
			Double acting/single rod	Fine speed		NPT	G		Rear piping	
		Code	None	F		N	G		R	
Variation	Double acting/single rod	Blank				x	x		◎	
	Fine speed	F				x	x		◎	
Port thread	NPT	N					x		x	
	G	G								
Option	Rear common port	R								
Accy.	Cylinder switch	Listed separately	◎	◎		x	x		◎	

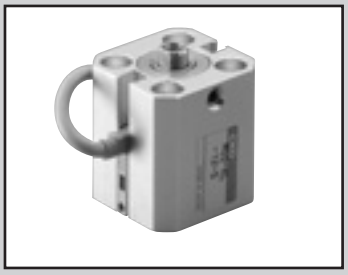

Small compact cylinder double acting/single rod

MSD Series

● Bore size: ø6/ø8

JIS symbol

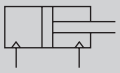

Double acting

RoHS CAD

Specifications

Item	MSD MSD-L (with switch)
Bore size mm	ø6,ø8
Actuation	Double acting
Working fluid	Compressed air
Max. working pressure MPa	1.0 (≈150 psi, 10 bar)
Min. working pressure MPa	0.15 (≈22 psi, 1.5 bar)
Proof pressure MPa	1.6 (≈230 psi, 16 bar)
Ambient temperature °C	-10 (14°F) to 60 (140°F) (no freezing)
Port size	M3
Stroke tolerance mm	+0.5 0
Working piston speed mm/s	50 to 500
Cushion	None
Lubrication	Not required (use turbine oil ISO VG32 if necessary for lubrication)
Allowable absorbed energy J	This product cannot absorb the energy generated by an external load mounted on the cylinder. When using the product with no load, separately provide a shock absorber on the outside.

Stroke

Bore size (mm)	Standard stroke (mm)	Max. stroke (mm)	Min. stroke with two switches (mm)		Min. stroke with one switch (mm)	
			Reed switch	Proximity switch	Reed switch	Proximity switch
ø6	5/10/15/20/25/30	30	10	5(10)	5	5
ø8	5/10/15/20/25/30	30	10	5(10)	5	5

*1: Products with stroke other than standard stroke are not available.
*2: For F2Y, F3Y or F3P, the min. stroke will be the dimensions in ( ).

Switch specifications

Item	2-wire reed	2-wire proximity			3-wire proximity			
	FOH/V	F2H/V	F2S	F2YH/V	F3H/V	F3S	F3PH/V (Made to order)	F3YH/V
Applications	Dedicated for programmable controller				For programmable controller, relay			
Output method	-				NPN output	NPN output	PNP output	NPN output
Power supply voltage	-	-	-	-	10 to 28 VDC	10 to 28 VDC	4.5 to 28 VDC	10 to 28 VDC
Load voltage	24 VDC	10 to 30 VDC	10 to 30 VDC	24 VDC ±10%	30 VDC or less			
Load current	5 to 20 mA (*3)				50 mA or less			
Current consumption	-	-	-	-	≤10 mA (ON) at 24 VDC	10 mA or less with 24 VDC		
Internal voltage drop	4V or less				0.5V or less		0.5 V or less at 30 mA	0.5V or less
Indicator	Yellow LED (Lit when ON)		LED (Lit when ON)	Red/green LED (Lit when ON)	Yellow LED (Lit when ON)	LED (Lit when ON)	Yellow LED (Lit when ON)	Red/green LED (Lit when ON)
Leakage current	1 mA or less				10 μA or less			
Lead wire length	Standard 1 m (oil resistant vinyl cabtyre cable 2-conductor 0.15 mm²)				Standard 1 m (oil resistant vinyl cabtyre cable 3-conductor 0.15 mm²)			
Shock resistance	294 m/s²	980 m/s²						
Insulation resistance	20 MΩ and over with 500 VDC megger							
Withstand voltage	No failure after 1 minute of 1,000 VAC application.							
Ambient temperature	-10 to +60°C							
Degree of protection	IEC Standard IP67, JIS C0920 (water-tight), oil resistance							
Weight g	1 m:10 3 m:29							

*1 : Refer to Ending Page 1 for detailed switch specifications and dimensions.
*2 : Switches other than the above models, such as switches with connectors, are also available. Refer to Ending Page 1.
*3 : The max. load current is 20 mA at 25°C. The current is lower than 20 mA if the operating ambient temperature around the switch is higher than 25°C. (5 to 10 mA at 60°C)
*4 : The F-switch uses a bend-resistant lead wire.

Cylinder weight table

(Unit: g)

Stroke (mm) / Bore size (mm)	5		10		15		20		25		30		Weight per switch
	No switch	With switch	No switch	With switch	No switch	With switch	No switch	With switch	No switch	With switch	No switch	With switch	
ø6	22	24	25	27	27	29	30	32	33	35	36	38	Refer to the weight in the switch specifications.
ø8	23	26	28	31	33	36	38	41	42	45	47	50	

Theoretical thrust table

(Unit: N)

Bore size (mm)	Operating direction	Working pressure MPa									
		0.15	0.2	0.3	0.4	0.5	0.6	0.7	0.8	0.9	1.0
ø6	Push	4.24	5.65	8.48	11.3	14.1	17.0	19.8	22.6	25.4	28.3
	Pull	2.36	3.14	4.71	6.28	7.85	9.42	11.0	12.6	14.1	15.7
ø8	Push	7.54	10.1	15.1	20.1	25.1	30.2	35.2	40.2	45.2	50.3
	Pull	4.59	6.13	9.19	12.3	15.3	18.4	21.4	24.5	27.6	30.6

SCP*3
CMK2
CMA2
SCM
SCG
SCA2
SCS2
CKV2
CAV2/COVP/N2
SSD2
SSG
SSD
CAT
MDC2
MVC
SMG
MSD/MSDG
FC*
STK
SRL3
SRG3
SRM3
SRT3
MRL2
MRG2
SM-25
ShkAbs
FJ
FK
Spd Contr
Ending

How to order

● No switch (without magnet for switch)

MSD - 6 - 5 ———— R

● With switch (built-in magnet for switch)

MSD-L - 6 - 5 - F0H - R - R

Ⓐ Model No.
Ⓑ Bore size
Ⓒ Stroke
Ⓓ Switch model No. *1
Ⓔ Switch quantity
Ⓕ Option *2

Code	Description	
Ⓐ Model No.		
MSD	Double acting/single rod	No switch
MSD-L		With switch

Ⓑ Bore size (mm)	
6	ø6
8	ø8

Ⓒ Stroke (mm)	
5	5
10	10
15	15
20	20
25	25
30	30

Ⓓ Switch model No.

Axial lead wire	Radial lead wire	Contact	Voltage AC	Voltage DC	Indicator	Lead wire
F0H*	**F0V***	Reed		●	1-color LED	2-wire
-	**F2S***	Proximity		●		
F2H*	**F2V***			●		
-	**F3S***			●		3-wire
F3H*	**F3V***			●		
F3PH*	**F3PV***			●	1-color LED (PNP output) (custom)	
F2YH*	**F2YV***			●	2-color LED	2-wire
F3YH*	**F3YV***			●		3-wire

*** Lead wire length**	
Blank	1 m (standard)
3	3 m (option)

Ⓔ Switch quantity	
R	1 on rod side
H	1 on head side
D	2

Ⓕ Option	
Blank	Front piping
R	Rear piping

⚠ Precautions for model No. selection

*1 : For ø6 or ø8 with switch, use a non-magnetic (stainless steel, etc.) mounting bolt.
*2 : For rear piping, body side installation is possible. Note that 2 bolts are used for rod side installation and head side installation.

[Example of model No.]

MSD-L-6-5-F0H-R-R

Ⓐ Model No. : Double acting/single rod with switch
Ⓑ Bore size : ø6 mm
Ⓒ Stroke : 5 mm
Ⓓ Switch model No. : Reed F0H switch, lead wire 1 m
Ⓔ Switch quantity : 1 on rod side
Ⓕ Option : Rear piping

How to order switch

SW - F0H

Switch model No. (Item Ⓓ above)

Specifications for rechargeable battery (Catalog No. CC-1226A)

● Design compatible with rechargeable battery manufacturing process

MSD -.....- P4*

Switch selection table

Switches may not be installable depending on relations between cylinder installation and stroke.
Refer to the table below to select a switch.
Switches cannot be used for side mounting in the following combinations.
·Combinations in which F2YH/V, F3YH/V or F3PH/V is mounted at the switch mounting position H with stroke 5 mm
·Combinations in which F2YH, F3YH or F3PH is mounted at the switch mounting position H with stroke 10 mm
(Refer to page 1422 for the min. stroke with switch)

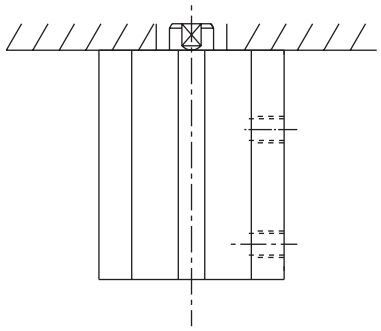
For rod side installation

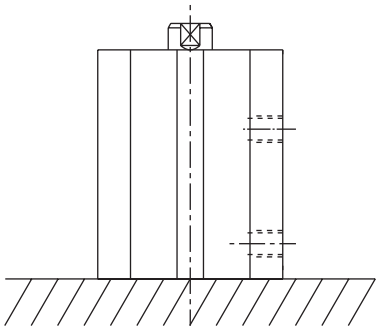
For head side installation

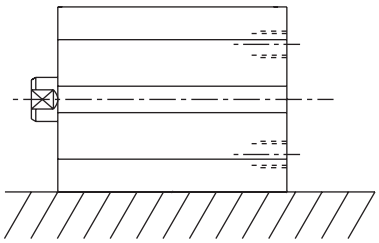
For side installation

● For rod side installation

Bore size (mm)	Stroke (mm)	Reed switch				Proximity switch									
		F0H		F0V		F2S/F3S		F2H/F3H		F2V/F3V		F2YH/F3YH/F3PH		F2YV/F3YV/F3PV	
		Switch position		Switch position		Switch position		Switch position		Switch position		Switch position		Switch position	
		R	H	R	H	R	H	R	H	R	H	R	H	R	H
ø6	5	○	○	○	○	○	○	○	×	○	○	○	×	○	×
	10	○	○	○	○	○	○	○	○	○	○	○	○	○	○
	15 to	○	○	○	○	○	○	○	○	○	○	○	○	○	○
ø8	5	○	○	○	○	○	○	○	×	○	○	○	×	○	×
	10	○	○	○	○	○	○	○	○	○	○	○	○	○	○
	15 to	○	○	○	○	○	○	○	○	○	○	○	○	○	○

● For head side installation

Bore size (mm)	Stroke (mm)	Reed switch				Proximity switch									
		F0H		F0V		F2S/F3S		F2H/F3H		F2V/F3V		F2YH/F3YH/F3PH		F2YV/F3YV/F3PV	
		Switch position		Switch position		Switch position		Switch position		Switch position		Switch position		Switch position	
		R	H	R	H	R	H	R	H	R	H	R	H	R	H
ø6	5	×	×	○	○	○	○	×	○	○	○	×	×	○	×
	10	○	×	○	○	○	○	×	○	○	○	×	○	○	○
	15	○	×	○	○	○	○	○	○	○	○	×	○	○	○
	20 to	○	×	○	○	○	○	○	○	○	○	○	○	○	○
ø8	5	×	×	○	○	○	○	×	○	○	○	×	×	○	×
	10	○	×	○	○	○	○	×	○	○	○	×	○	○	○
	15	○	×	○	○	○	○	○	○	○	○	×	○	○	○
	20 to	○	×	○	○	○	○	○	○	○	○	○	○	○	○

Internal structure and parts list

● MSD-6/8

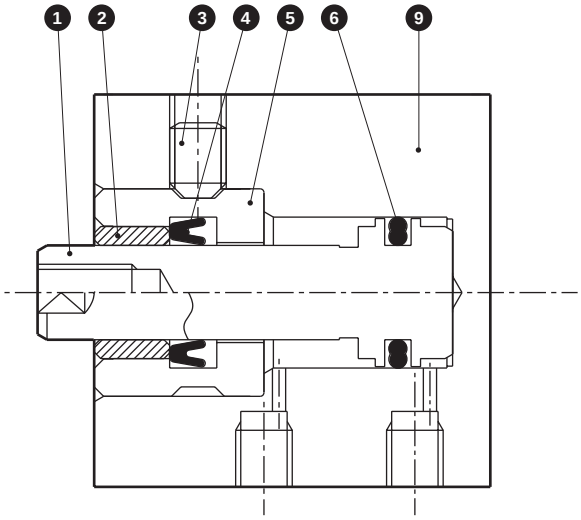

● MSD-L-6/8

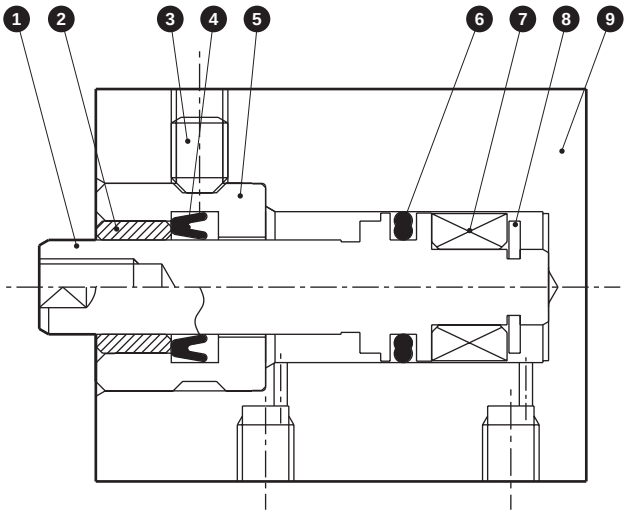

Cannot be disassembled

No.	Part name	Material	Remarks	No.	Part name	Material	Remarks
1	Piston	Stainless steel		6	Piston packing	Nitrile rubber	
2	Bush	Oil-impregnated copper alloy		7	Magnet	Plastic	
3	Hexagon socket set screw	Stainless steel		8	E type snap ring	Stainless steel	
4	Rod packing	Nitrile rubber		9	Body	Aluminum alloy	Hard alumite
5	Rod metal	Stainless steel					

Dimensions

● MSD-(L)-6/8

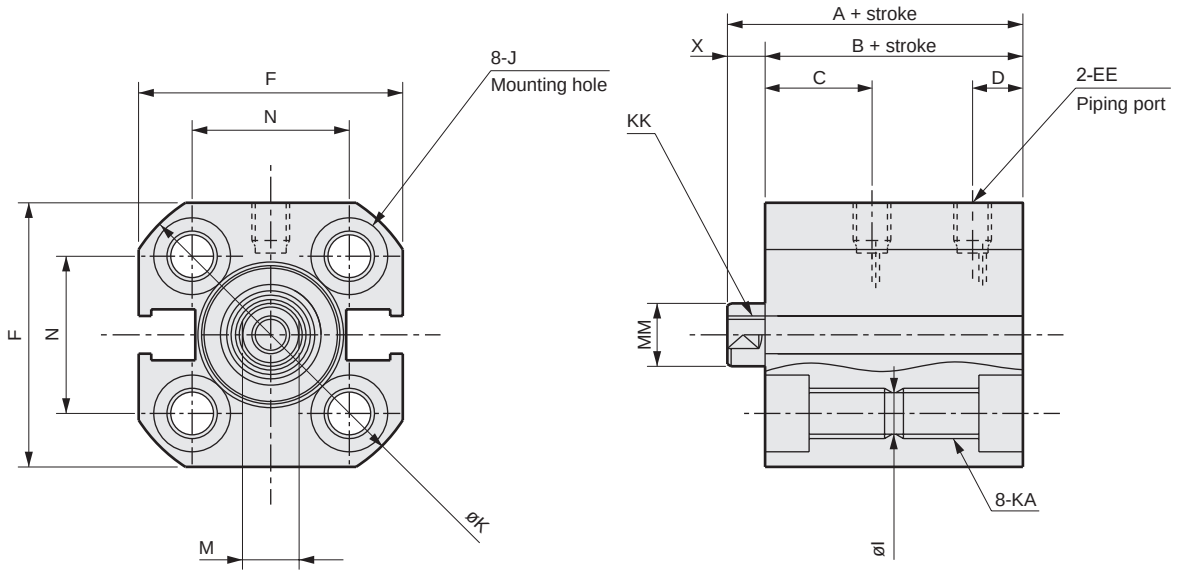

● MSD-(L)-6/8-*-R (rear piping)

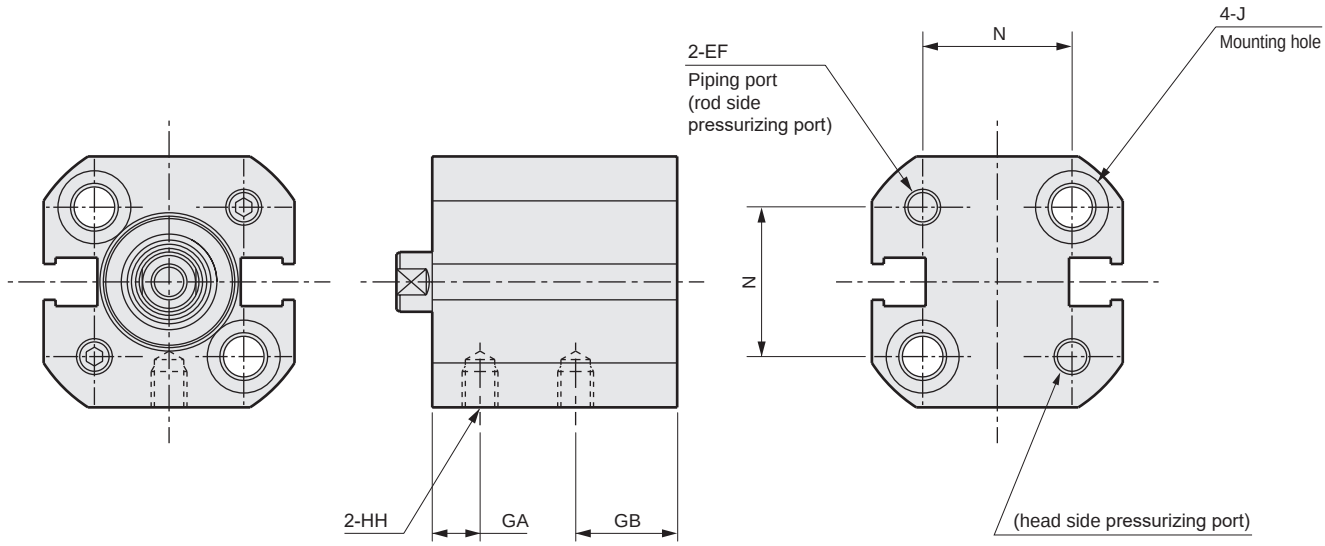

Bore size (mm)	No switch		With switch		Common dimensions for types with/without switches											
	A	B	A	B	C	D	EE	EF	F	GA	GB	HH	I	J	K	KA
ø6	17.5	14.5	22.5	19.5	7.5	4	M3	M3	19	3	8.5	M3 depth 3	3.2	Spot face ø6.1 depth 3.5	22.5	M4 depth 6
ø8	19	16	24	21	9	4	M3	M3	21	4.5	8.5	M3 depth 3	3.2	Spot face ø6.1 depth 3.5	25	M4 depth 6

Bore size (mm)	Common parts for types with/without switches				
	KK	M	MM	N	X
ø6	M2.5 depth 4	3.5	4	11	3
ø8	M3 depth 5	4.5	5	12.5	3

SCP*3
CMK2
CMA2
SCM
SCG
SCA2
SCS2
CKV2
CAV2/COVP/N2
SSD2
SSG
SSD
CAT
MDC2
MVC
SMG
MSD/MSDG
FC*
STK
SRL3
SRG3
SRM3
SRT3
MRL2
MRG2
SM-25
ShkAbs
FJ
FK
Spd Contr
Ending

Switch mounting position

● Reed switch

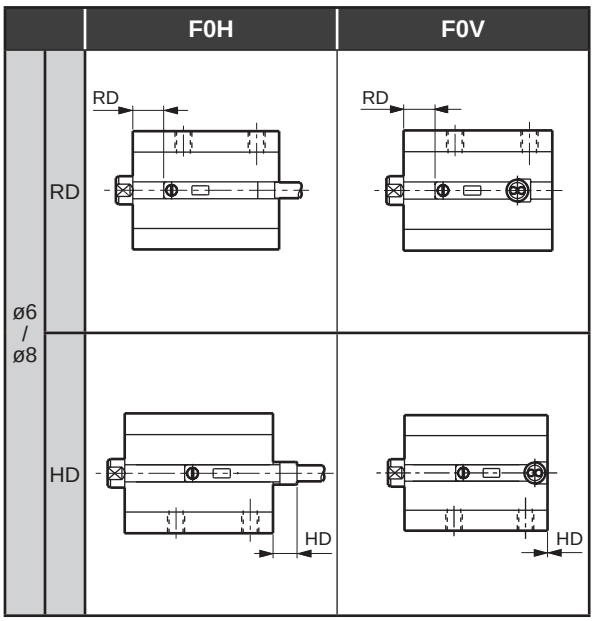

● Proximity switch

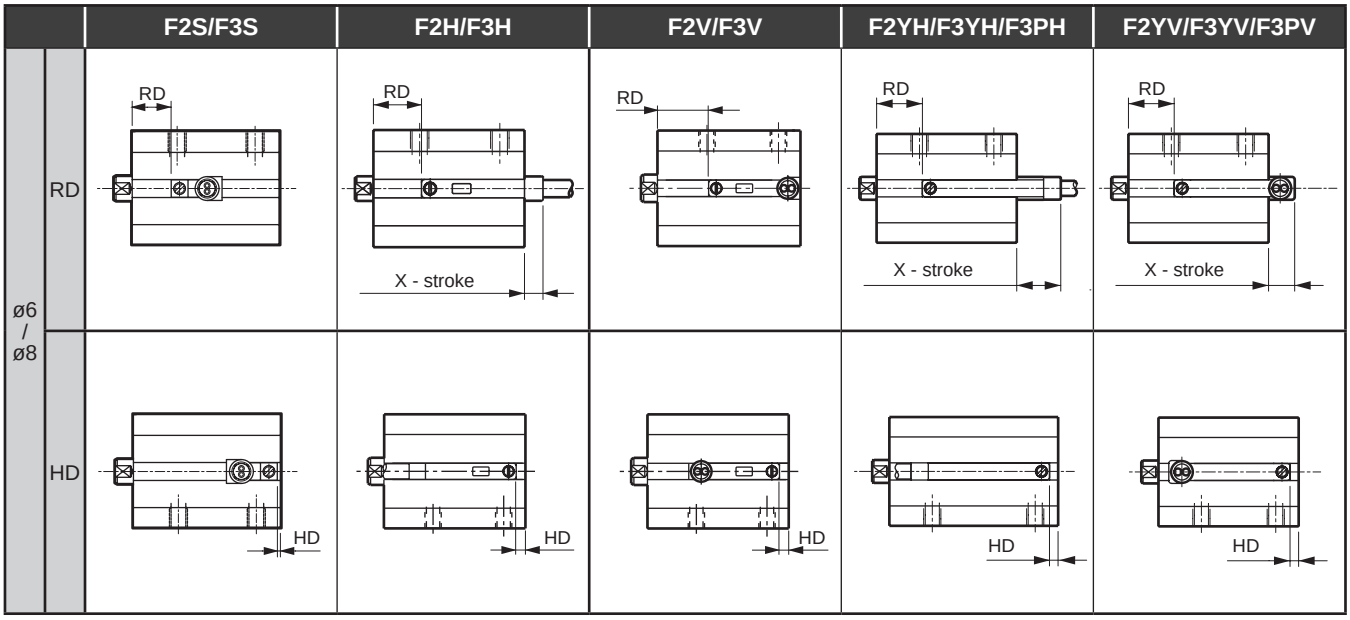

Switch mounting position dimensions

(Unit: mm)

Model	Bore size (mm)	Reed switch				Proximity switch												
		F0H		F0V		F2S/F3S		F2H/F3H			F2V/F3V		F2YH/F3YH/F3PH			F2YV/F3YV/F3PV		
		RD	HD	RD	HD	RD	HD	RD	HD	X (*1)	RD	HD	RD	HD	X (*1)	RD	HD	X (*1)
MSD-L	ø6	3.5	3.5	3.5	0.0	6.5	0.5	7.5	1.5	7.7	7.5	1.5	7.5	1.5	12.2	7.5	1.5	9.2
	ø8	5.5	4.0	5.5	0.0	8.5	0.0	9.5	1.0	8.2	9.5	1.0	9.5	1.0	12.7	9.5	1.0	9.7

*1: X dimensions indicate the switch protrusion from the body end surface. When the X-stroke is negative, there is no protrusion from the body end surface.

MEMO

Small compact cylinder single acting/push
single acting/pull

MSD-X/Y Series

● Bore size: ø6/ø8

JIS symbol

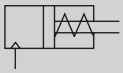

Single acting/push

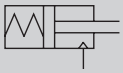

Single acting/pull

RoHS CAD

Specifications

Item	MSD-X MSD-XL (with switch)		MSD-Y MSD-YL (with switch)	
Bore size mm	ø6	ø8	ø6	ø8
Actuation	Single acting/push		Single acting/pull	
Working fluid	Compressed air			
Max. working pressure MPa	1.0 (≈150 psi, 10 bar)			
Min. working pressure MPa	0.3 (≈44 psi, 3 bar)		0.4 (≈58 psi, 4 bar)	0.3 (≈44 psi, 3 bar)
Proof pressure MPa	1.6 (≈230 psi, 16 bar)			
Ambient temperature °C	-10 (14°F) to 60 (140°F) (no freezing)			
Port size	M3			
Stroke tolerance mm	+0.5 0			
Working piston speed mm/s	50 to 500			
Cushion	None			
Lubrication	Not required (use turbine oil ISO VG32 if necessary for lubrication)			
Allowable absorbed energy J	This product cannot absorb the energy generated by an external load mounted on the cylinder. When using the product with no load, separately provide a shock absorber on the outside.			

Stroke

Bore size (mm)	Standard stroke (mm)	Max. stroke (mm)	Min. stroke with two switches (mm)		Min. stroke with one switch (mm)	
			Reed switch	Proximity switch	Reed switch	Proximity switch
ø6	5/10	10	10	5(10)	5	5
ø8	5/10	10	10	5(10)	5	5

*1: Products with stroke other than standard stroke are not available.

*2: For F2Y, F3Y or F3P, the min. stroke will be the dimensions in ( ).

Switch specifications

Item	2-wire reed	2-wire proximity			3-wire proximity			
	FOH/V	F2H/V	F2S	F2YH/V	F3H/V	F3S	F3PH/V (Made to order)	F3YH/V
Applications	Dedicated for programmable controller				For programmable controller, relay			
Output method	-				NPN output	NPN output	PNP output	NPN output
Power supply voltage	-	-	-	-	10 to 28 VDC	10 to 28 VDC	4.5 to 28 VDC	10 to 28 VDC
Load voltage	24 VDC	10 to 30 VDC	10 to 30 VDC	24 VDC ±10%	30 VDC or less			
Load current	5 to 20 mA (*3)				50 mA or less			
Current consumption	-	-	-	-	≤10 mA (ON) at 24 VDC	10 mA or less with 24 VDC		
Internal voltage drop	4V or less				0.5V or less		0.5 V or less at 30 mA	0.5V or less
Indicator	Yellow LED (Lit when ON)		LED (Lit when ON)	Red/green LED (Lit when ON)	Yellow LED (Lit when ON)	LED (Lit when ON)	Yellow LED (Lit when ON)	Red/green LED (Lit when ON)
Leakage current	1 mA or less				10 μA or less			
Lead wire length	Standard 1 m (oil resistant vinyl cabtyre cable 2-conductor 0.15 mm²)				Standard 1 m (oil resistant vinyl cabtyre cable 3-conductor 0.15 mm²)			
Shock resistance	294 m/s²	980 m/s²						
Insulation resistance	20 MΩ and over with 500 VDC megger							
Withstand voltage	No failure after 1 minute of 1,000 VAC application.							
Ambient temperature	-10 to +60°C							
Degree of protection	IEC Standard IP67, JIS C0920 (water-tight), oil resistance							
Weight g	1 m:10 3 m:29							

*1 : Refer to Ending Page 1 for detailed switch specifications and dimensions.
*2 : Switches other than the above models, such as switches with connectors, are also available. Refer to Ending Page 1.
*3 : The max. load current is 20 mA at 25°C. The current is lower than 20 mA if the operating ambient temperature around the switch is higher than 25°C. (5 to 10 mA at 60°C)
*4 : The F-switch uses a bend-resistant lead wire.

Cylinder weight table

● MSD-X/MSD-XL

(Unit: g)

Stroke (mm) / Bore size (mm)	5		10		Weight per switch
	No switch	With switch	No switch	With switch	
ø6	23	25	28	30	Refer to the weight in the switch specifications.
ø8	24	27	33	36	

● MSD-Y/MSD-YL

(Unit: g)

Stroke (mm) / Bore size (mm)	5		10		Weight per switch
	No switch	With switch	No switch	With switch	
ø6	25	27	31	33	Refer to the weight in the switch specifications.
ø8	28	31	38	41	

Spring load

(Unit: N)

Bore size (mm)	Stroke (mm)	Spring load	
		Set	Operating
ø6	5	1.59	4.90
	10		
ø8	5	3.19	6.86
	10		

Theoretical thrust table

● MSD-X

(Unit: N)

Bore size (mm)	Working pressure MPa							
	0.3	0.4	0.5	0.6	0.7	0.8	0.9	1.0
ø6	3.58	6.41	9.24	12.1	14.9	17.7	20.5	23.4
ø8	8.22	13.2	18.3	23.3	28.3	33.4	38.4	43.4

● MSD-Y

(Unit: N)

Bore size (mm)	Working pressure MPa							
	0.3	0.4	0.5	0.6	0.7	0.8	0.9	1.0
ø6	-	1.38	2.95	4.52	6.10	7.67	9.24	10.8
ø8	2.33	5.39	8.46	11.5	14.6	17.6	20.7	23.8

SCP*3
CMK2
CMA2
SCM
SCG
SCA2
SCS2
CKV2
CAV2/COVP/N2
SSD2
SSG
SSD
CAT
MDC2
MVC
SMG
MSD/MSDG
FC*
STK
SRL3
SRG3
SRM3
SRT3
MRL2
MRG2
SM-25
ShkAbs
FJ
FK
Spd Contr
Ending

How to order

● No switch (without magnet for switch)

MSD-X - 6 - 5 ——— R

● With switch (built-in magnet for switch)

MSD-XL - 6 - 5 - F0H - R - R

Ⓐ Model No.

Ⓑ Bore size

Ⓒ Stroke

Ⓓ Switch model No. *1

Ⓔ Switch quantity

Ⓕ Option *2

Code	Description	
Ⓐ Model No.		
MSD-X	Single acting/push	No switch
MSD-Y	Single acting/pull	
MSD-XL	Single acting/push	With switch
MSD-YL	Single acting/pull	
Ⓑ Bore size (mm)		
6	ø6	
8	ø8	
Ⓒ Stroke (mm)		
5	5	
10	10	

Ⓓ Switch model No.

Axial lead wire	Radial lead wire	Contact	Voltage AC	Voltage DC	Indicator	Lead wire
F0H*	**F0V***	Reed		●	1-color LED	2-wire
-	**F2S***	Proximity		●		
F2H*	**F2V***			●		
-	**F3S***			●		3-wire
F3H*	**F3V***			●		
F3PH*	**F3PV***			●	1-color LED (PNP output) (Made to order)	
F2YH*	**F2YV***			●	2-color LED	2-wire
F3YH*	**F3YV***			●		3-wire

*** Lead wire length**	
Blank	1 m (standard)
3	3 m (option)

Ⓔ Switch quantity	
R	1 on rod side
H	1 on head side
D	2

Ⓕ Option	
Blank	Front piping
R	Rear piping

⚠ Precautions for model No. selection

*1 : For ø6 or ø8 with switch, use a non-magnetic (stainless steel, etc.) mounting bolt.
*2 : For rear piping, body side installation is possible. Note that 2 bolts are used for rod side installation and head side installation.

[Example of model No.]

MSD-XL-6-5-F0H-R-R

Ⓐ Model No. : Single acting/push with switch
Ⓑ Bore size : ø6 mm
Ⓒ Stroke : 5 mm
Ⓓ Switch model No. : Reed F0H switch, lead wire 1 m
Ⓔ Switch quantity : 1 on rod side
Ⓕ Option : Rear piping

How to order switch

SW - F0H

Switch model No.
(Item Ⓓ above)

Switch selection table

Switches may not be installable depending on relations between cylinder installation and stroke.
Refer to the table below to select a switch.
Switches cannot be used for side mounting in the following combinations.

- ·Combinations in which F2YH/V, F3YH/V or F3PH/V is mounted at the switch mounting position H with X type or Y type stroke 5 mm
- ·Combinations in which F2YH, F3YH or F3PH is mounted at the switch mounting position H with X type stroke 10 mm

(Refer to page 1430 for the min. stroke with switch)

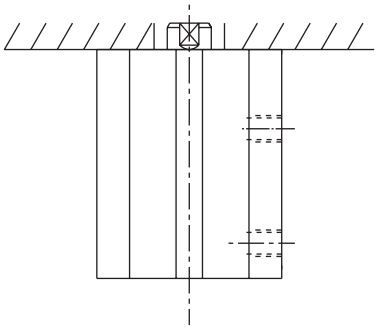

For rod side installation

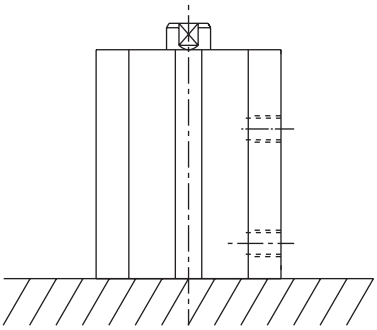

For head side installation

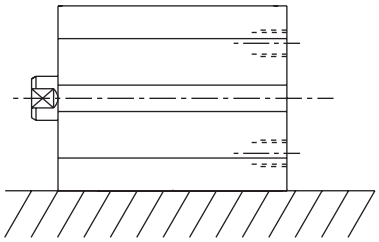

For side installation

● For MSD-XL rod side installation

Bore size (mm)	Stroke (mm)	Reed switch				Proximity switch									
		F0H		F0V		F2S, F3S		F2H/F3H		F2V/F3V		F2YH/F3YH/F3PH		F2YV/F3YV/F3PV	
		Switch position		Switch position		Switch position		Switch position		Switch position		Switch position		Switch position	
		R	H	R	H	R	H	R	H	R	H	R	H	R	H
ø6	5	○	○	○	○	○	○	○	×	○	○	○	×	○	○
	10	○	○	○	○	○	○	○	○	○	○	○	○	○	○
ø8	5	○	○	○	○	○	○	○	×	○	○	○	×	○	○
	10	○	○	○	○	○	○	○	○	○	○	○	○	○	○

● For MSD-XL head side installation

Bore size (mm)	Stroke (mm)	Reed switch				Proximity switch									
		F0H		F0V		F2S, F3S		F2H/F3H		F2V/F3V		F2YH/F3YH/F3PH		F2YV/F3YV/F3PV	
		Switch position		Switch position		Switch position		Switch position		Switch position		Switch position		Switch position	
		R	H	R	H	R	H	R	H	R	H	R	H	R	H
ø6	5	×	×	○	○	○	○	×	○	○	○	×	×	×	○
	10	○	×	○	○	○	○	×	○	○	○	×	○	○	○
ø8	5	×	×	○	○	○	○	×	○	○	○	×	×	×	○
	10	○	×	○	○	○	○	×	○	○	○	×	○	○	○

● For MSD-YL rod side installation

Bore size (mm)	Stroke (mm)	Reed switch				Proximity switch									
		F0H		F0V		F2S, F3S		F2H/F3H		F2V/F3V		F2YH/F3YH/F3PH		F2YV/F3YV/F3PV	
		Switch position		Switch position		Switch position		Switch position		Switch position		Switch position		Switch position	
		R	H	R	H	R	H	R	H	R	H	R	H	R	H
ø6	5	○	○	○	○	○	○	○	×	○	○	○	×	○	○
	10	○	○	○	○	○	○	○	○	○	○	○	○	○	○
ø8	5	○	○	○	○	○	○	○	×	○	○	○	×	○	○
	10	○	○	○	○	○	○	○	○	○	○	○	○	○	○

● For MSD-YL head side installation

Bore size (mm)	Stroke (mm)	Reed switch				Proximity switch									
		F0H		F0V		F2S, F3S		F2H/F3H		F2V/F3V		F2YH/F3YH/F3PH		F2YV/F3YV/F3PV	
		Switch position		Switch position		Switch position		Switch position		Switch position		Switch position		Switch position	
		R	H	R	H	R	H	R	H	R	H	R	H	R	H
ø6	5	○	○	○	○	○	○	×	○	○	○	×	×	○	○
	10	○	○	○	○	○	○	○	○	○	○	×	○	○	○
ø8	5	○	○	○	○	○	○	×	○	○	○	×	×	○	×
	10	○	○	○	○	○	○	○	○	○	○	×	○	○	○

Internal structure and parts list

● MSD-X-6/8

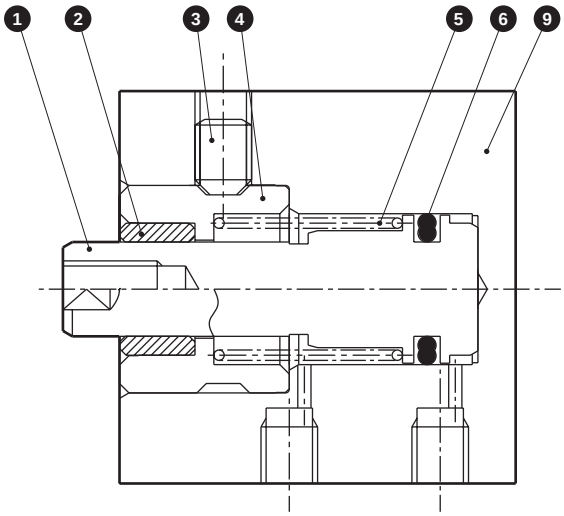

● MSD-XL-6/8

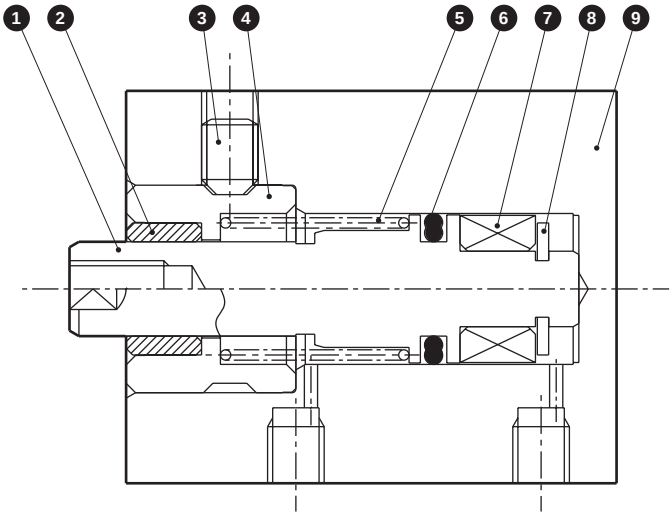

Cannot be disassembled

No.	Part name	Material	Remarks	No.	Part name	Material	Remarks
1	Piston	Stainless steel		6	Piston packing	Nitrile rubber	
2	Bush	Oil-impregnated copper alloy		7	Magnet	Plastic	
3	Hexagon socket set screw	Stainless steel		8	E type snap ring	Stainless steel	
4	Rod metal	Stainless steel		9	Body	Aluminum alloy	Hard alumite
5	Coil spring	Steel	Electrodeposition				

Internal structure and parts list

● MSD-Y-6/8

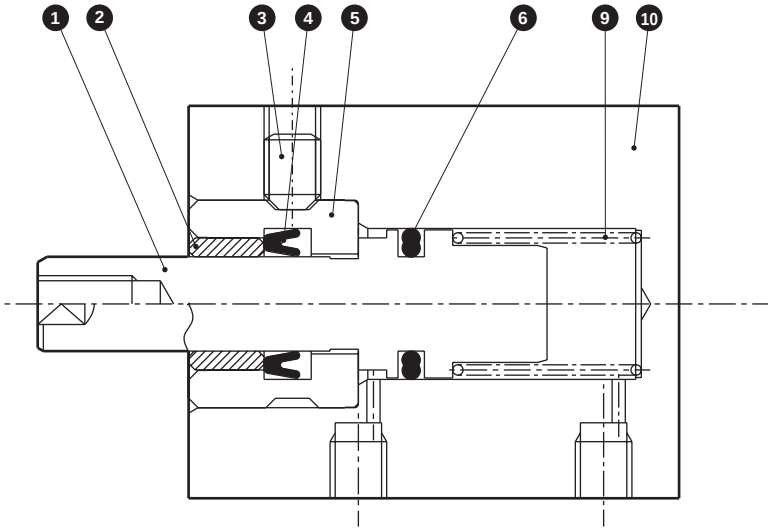

● MSD-YL-6/8

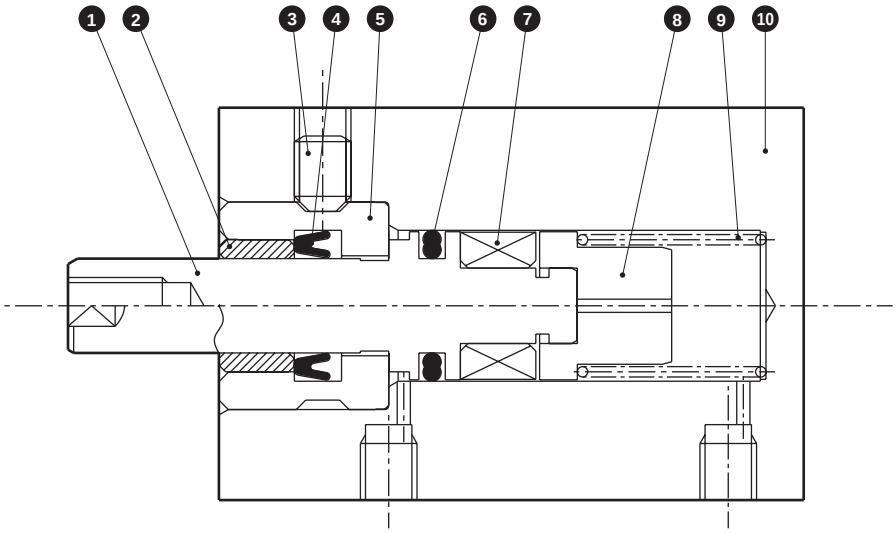

Cannot be disassembled

No.	Part name	Material	Remarks	No.	Part name	Material	Remarks
1	Piston	Stainless steel		6	Piston packing	Nitrile rubber	
2	Bush	Oil-impregnated copper alloy		7	Magnet	Plastic	
3	Hexagon socket set screw	Stainless steel		8	Spring holder	Stainless steel	
4	Rod packing	Nitrile rubber		9	Coil spring	Steel	Electrodeposition
5	Rod metal	Stainless steel		10	Body	Aluminum alloy	Hard alumite

Dimensions

● MSD-X (L)-6/8

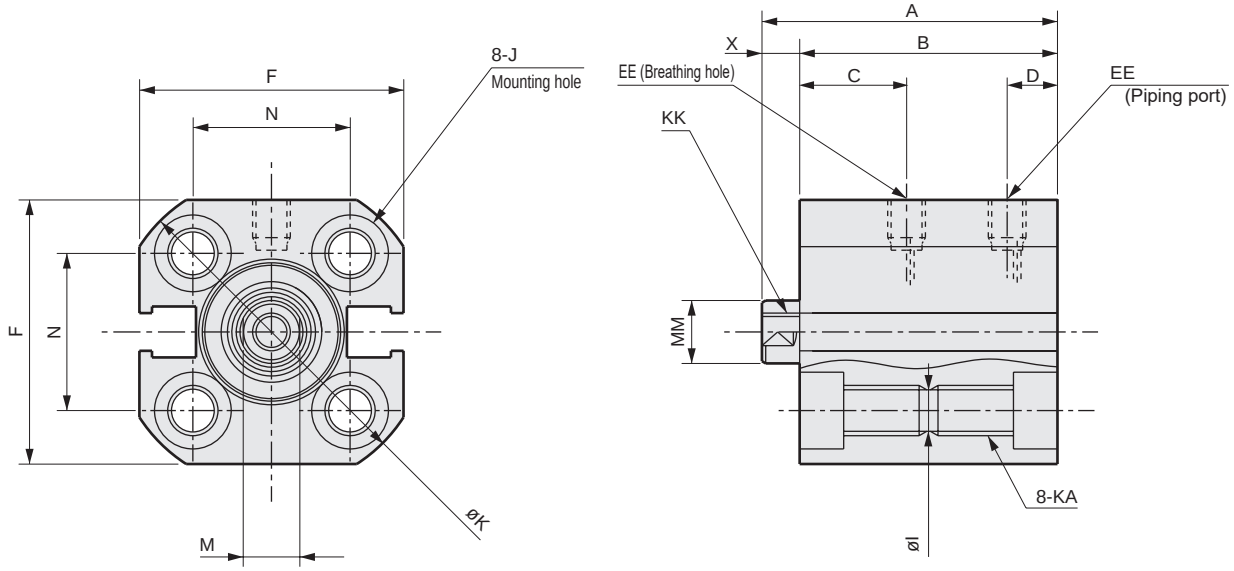

● MSD-X(L)-6/8-*-R (rear piping)

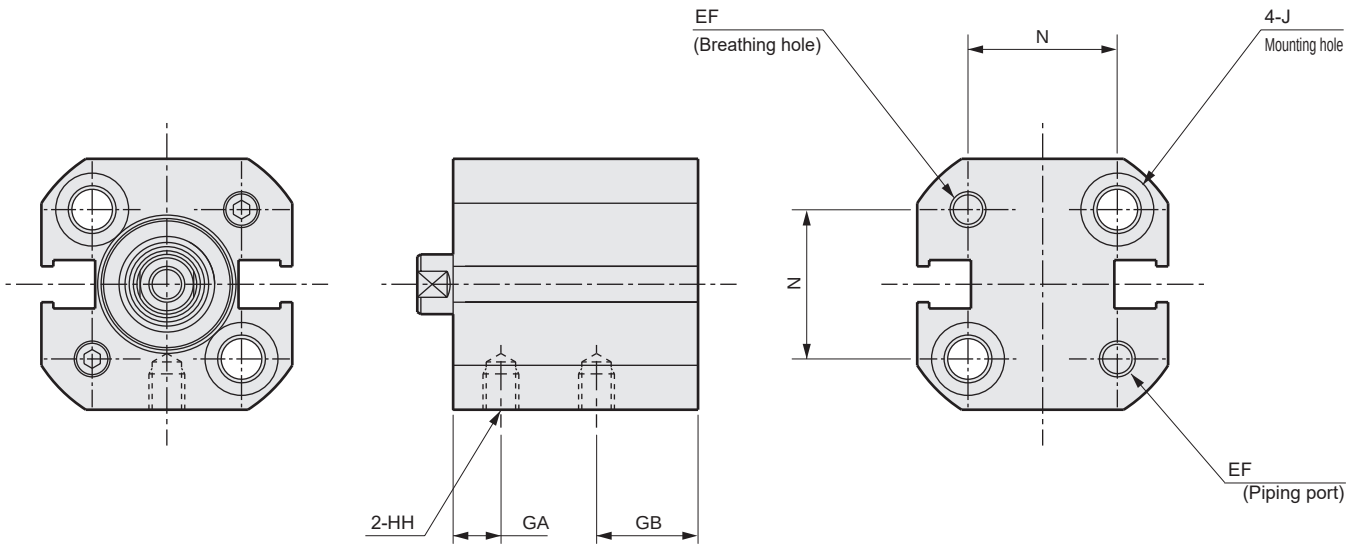

Code			No switch		With switch		Common dimensions for types with/without switches																
Bore size (mm)			A	B	A	B	C	D	EE	EF	F	GA	GB	HH	I	J	K	KA	KK	M	MM	N	X
ø6	Stroke mm	5	22.5	19.5	27.5	24.5	7.5	4	M3	M3	19	3	8.5	M3 Depth 3	3.2	Spot face ø6.1 depth 3.5	22.5	M4 Depth 6	M2.5 Depth 4	3.5	4	11	3
		10	32.5	29.5	37.5	34.5																	
ø8	Stroke mm	5	24	21	29	26	9	4	M3	M3	21	4.5	8.5	M3 Depth 3	3.2	Spot face ø6.1 depth 3.5	25	M4 Depth 6	M3 Depth 5	4.5	5	12.5	3
		10	34	31	39	36																	

Dimensions

● MSD-Y (L)-6/8

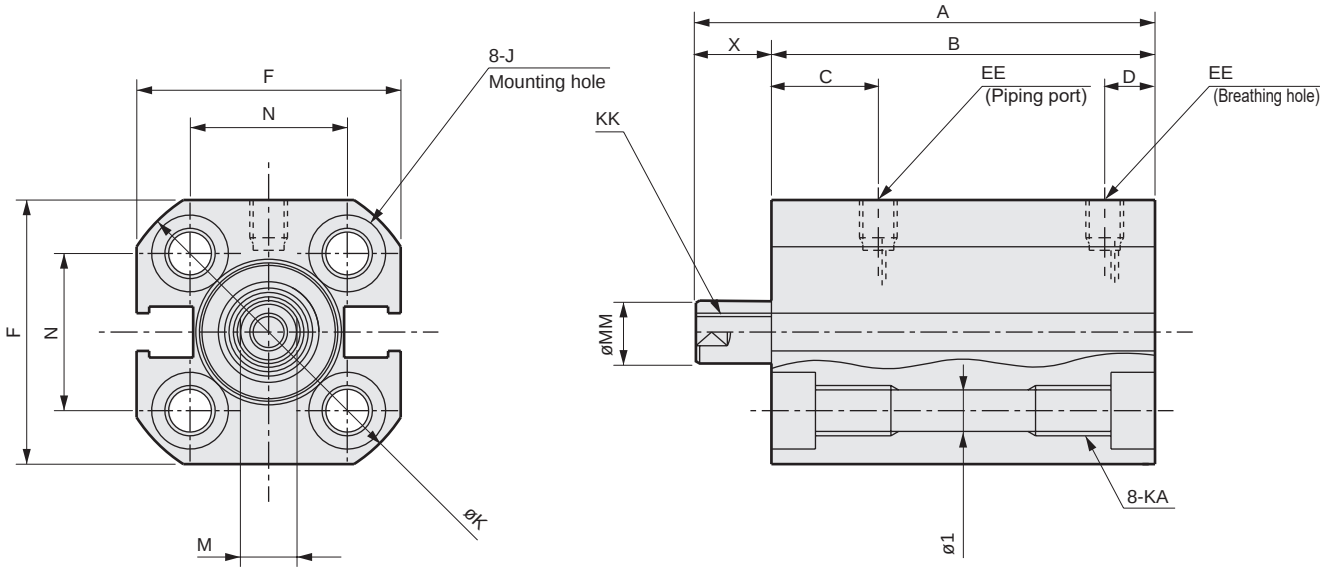

● MSD-Y(L)-6/8-*-R (rear piping)

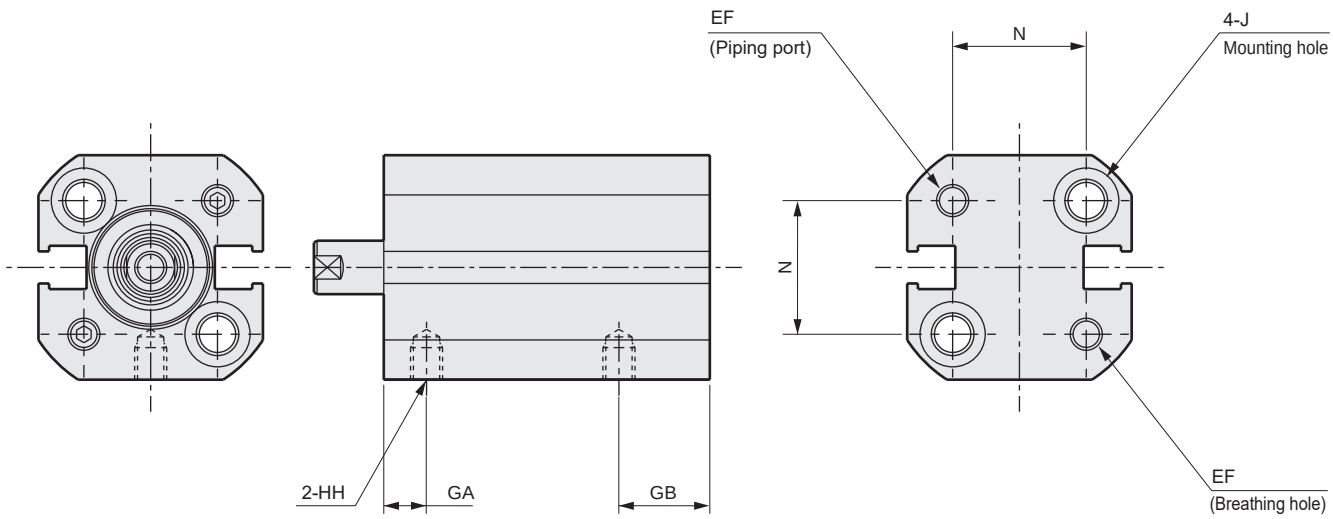

Code			No switch		With switch		Common dimensions for types with/without switches																
Bore size (mm)			A	B	A	B	C	D	EE	EF	F	GA	GB	HH	I	J	K	KA	KK	M	MM	N	X
ø6	Stroke mm	5	32.5	24.5	37.5	29.5	7.5	4	M3	M3	19	3	8.5	M3 Depth 3	3.2	Spot face ø6.1 depth 3.5	22.5	M4 Depth 6	M2.5 Depth 4	3.5	4	11	8
		10	47.5	34.5	52.5	39.5																	13
ø8	Stroke mm	5	34	26	39	31	9	4	M3	M3	21	4.5	8.5	M3 Depth 3	3.2	Spot face ø6.1 depth 3.5	25	M4 Depth 6	M3 Depth 5	4.5	5	12.5	8
		10	49	36	54	41																	13

SCP*3
CMK2
CMA2
SCM
SCG
SCA2
SCS2
CKV2
CAV2/COVP/N2
SSD2
SSG
SSD
CAT
MDC2
MVC
SMG
MSD/MSDG
FC*
STK
SRL3
SRG3
SRM3
SRT3
MRL2
MRG2
SM-25
ShkAbs
FJ
FK
Spd Contr
Ending

MSD-XL Switch mounting position

● Reed switch

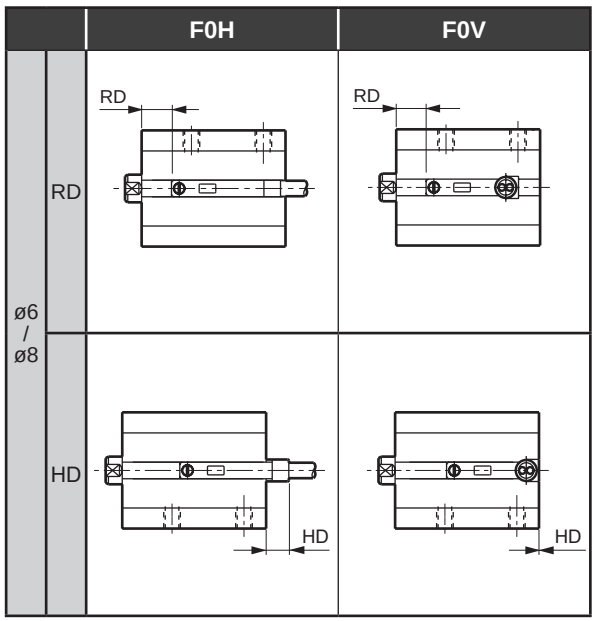

● Proximity switch

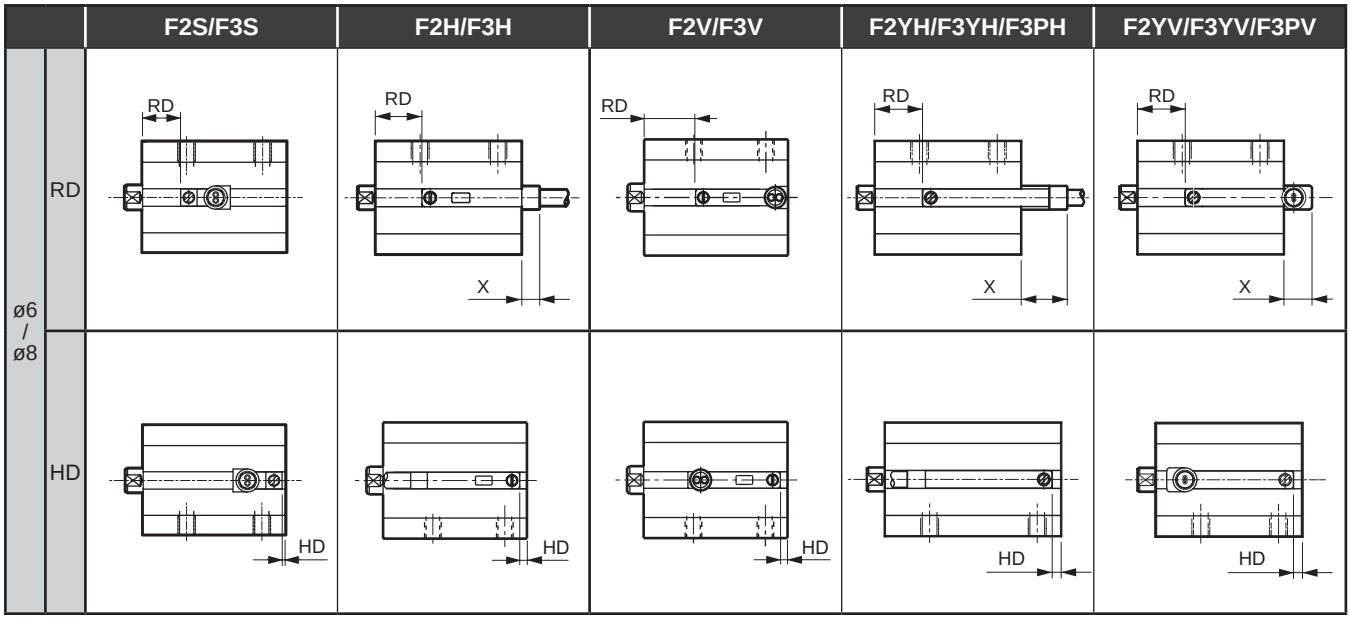

Switch mounting position dimensions

(Unit: mm)

Bore size	Stroke	Switch / Switch model No. / Max. sensitivity position	Reed switch F0H RD	Reed switch F0H HD	Reed switch F0V RD	Reed switch F0V HD	Proximity switch F2S/F3S RD	F2S/F3S HD	F2H/F3H RD	F2H/F3H HD	F2H/F3H X (*1)	F2V/F3V RD	F2V/F3V HD	F2YH/F3YH/F3PH RD	F2YH/F3YH/F3PH HD	F2YH/F3YH/F3PH X (*1)	F2YV/F3YV/F3PV RD	F2YV/F3YV/F3PV HD	F2YV/F3YV/F3PV X (*1)
MSD-XL	ø6	5	4.0	4.0	4.0	0	6.5	0.5	7.5	1.5	3.0	7.5	1.5	7.5	1.5	7.5	7.5	1.5	4.5
		10	9.0	4.0	9.0	0	11.5	0.5	12.5	1.5	-	12.5	1.5	12.5	1.5	-	12.5	1.5	-
	ø8	5	5.5	4.0	5.5	0	8.0	0.5	9.0	1.5	3.0	9.0	1.5	9.0	1.5	7.5	9.0	1.5	4.5
		10	10.5	4.0	10.5	0	13.0	0.5	14.0	1.5	-	14.0	1.5	14.0	1.5	-	14.0	1.5	-

*1: X dimensions indicate the switch protrusion from the body end surface. When the X dimensions are not indicated, there is no protrusion from the body end surface.

MSD-YL Switch mounting position

● Reed switch

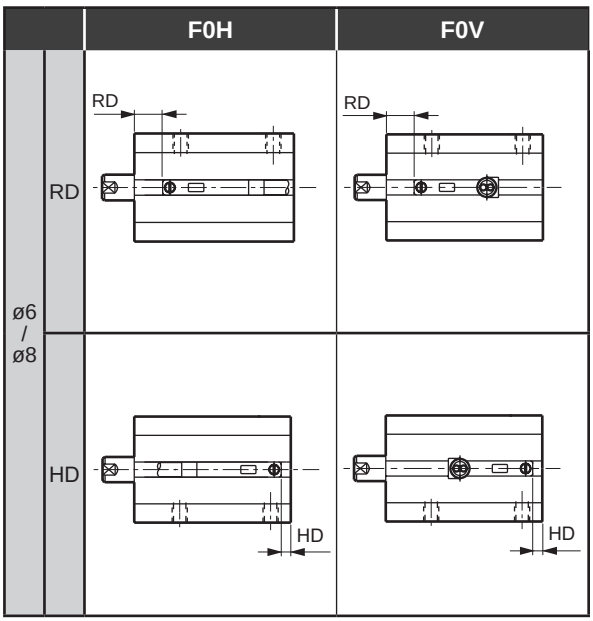

● Proximity switch

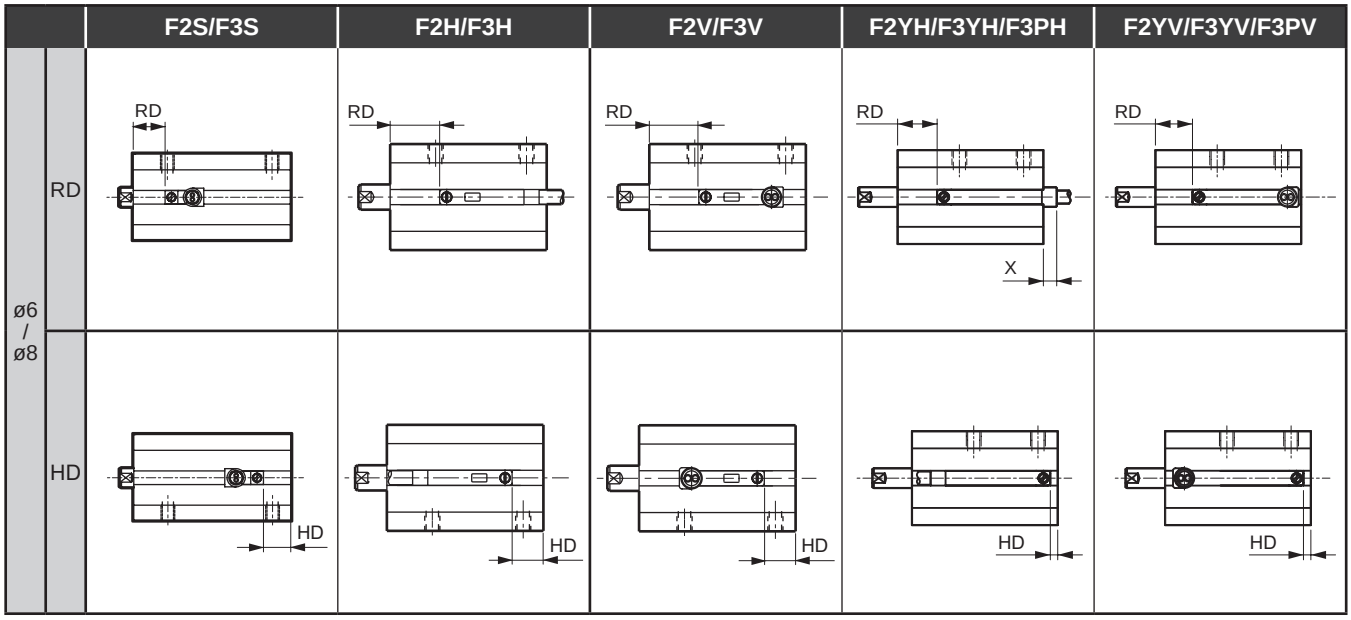

Switch mounting position dimensions

(Unit: mm)

Bore size	Stroke	Max. sensitivity position	Reed switch F0H RD	Reed switch F0H HD	Reed switch F0V RD	Reed switch F0V HD	Proximity switch F2S/F3S RD	F2S/F3S HD	F2H/F3H RD	F2H/F3H HD	F2V/F3V RD	F2V/F3V HD	F2YH/F3YH/F3PH RD	F2YH/F3YH/F3PH HD	F2YH/F3YH/F3PH X (*1)	F2YV/F3YV/F3PV RD	F2YV/F3YV/F3PV HD
MSD-YL	ø6	5	3.5	2.5	3.5	2.5	7.0	6.0	8.0	7.0	8.0	7.0	8.0	7.0	2.7	8.0	7.0
		10	3.5	7.5	3.5	7.5	7.0	11.0	8.0	12.0	8.0	12.0	8.0	12.0	-	8.0	12.0
	ø8	5	5.5	2.0	5.5	2.0	9.0	5.0	10.0	6.0	10.0	6.0	10.0	6.0	3.2	10.0	6.0
		10	5.5	7.0	5.5	7.0	9.0	10.0	10.0	11.0	10.0	11.0	10.0	11.0	-	10.0	11.0

*1: X dimensions indicate the switch protrusion from the body end surface. When the X dimensions are not indicated, there is no protrusion from the body end surface.

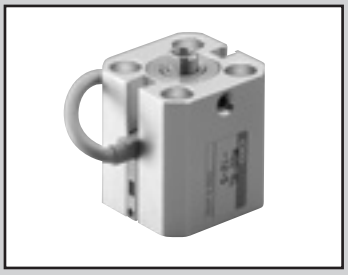

Small compact cylinder double acting/high load

MSD-K Series

● Bore size: ø6/ø8/ø12/ø16

JIS symbol

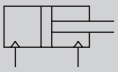

Double acting

RoHS CAD

Specifications

Item		MSD-K MSD-KL (with switch)			
Bore size mm		ø6	ø8	ø12	ø16
Actuation		Double acting			
Working fluid		Compressed air			
Max. working pressure MPa		1.0 (≈150 psi, 10 bar)			
Min. working pressure MPa		0.15 (≈22 psi, 1.5 bar)		0.1 (≈15 psi, 1 bar)	
Proof pressure MPa		1.6 (≈230 psi, 16 bar)			
Ambient temperature °C		-10 (14°F) to 60 (140°F) (no freezing)			
Connection bore size	Front piping	M3		M5	
	Rear piping	M3		M3	
Stroke tolerance mm		+2.0 0			
Working piston speed mm/s		50 to 500			
Cushion		With rubber cushion			
Lubrication		Not required (use turbine oil ISO VG32 if necessary for lubrication)			
Allowable absorbed energy J		0.004	0.014	0.044	0.110

Stroke

Bore size (mm)	Standard stroke (mm)	Max. stroke (mm)	Min. stroke with two switches (mm)		Min. stroke with one switch (mm)	
			Reed switch	Proximity switch	Reed switch	Proximity switch
ø6	5/10/15/20/25/30	30	10	5(10)	5	5
ø8	5/10/15/20/25/30	30	10	5	5	5
ø12	5/10/15/20/25/30	30	10	5	5	5
ø16	5/10/15/20/25/30	30	10	5	5	5

*1: Products with stroke other than standard stroke are not available.
*2: For F2Y, F3Y or F3P, the min. stroke will be the dimensions in ( ).

Switch specifications

Item	2-wire reed	2-wire proximity			3-wire proximity			
	FOH/V	F2H/V	F2S	F2YH/V	F3H/V	F3S	F3PH/V (Made to order)	F3YH/V
Applications	Dedicated for programmable controller				For programmable controller, relay			
Output method	-				NPN output	NPN output	PNP output	NPN output
Power supply voltage	-	-	-	-	10 to 28 VDC	10 to 28 VDC	4.5 to 28 VDC	10 to 28 VDC
Load voltage	24 VDC	10 to 30 VDC		24 VDC ±10%	30 VDC or less			
Load current	5 to 20 mA (*3)				50 mA or less			
Current consumption	-	-	-	-	≤10 mA (ON) at 24 VDC	10 mA or less with 24 VDC		
Internal voltage drop	4V or less				0.5V or less	0.5V or less	0.5 V or less at 30 mA	0.5V or less
Indicator	Yellow LED (Lit when ON)		LED (Lit when ON)	Red/green LED (Lit when ON)	Yellow LED (Lit when ON)	LED (Lit when ON)	Yellow LED (Lit when ON)	Red/green LED (Lit when ON)
Leakage current	1 mA or less				10 μA or less			
Lead wire length	Standard 1 m (Oil resistance a 0.15 mm²)				Standard 1 m (oil resistant vinyl cabtyre cable 3-conductor 0.15mm²)			
Shock resistance	294 m/s²	980 m/s²						
Insulation resistance	20 MΩ and over with 500 VDC megger							
Withstand voltage	No failure after 1 minute of 1,000 VAC application.							
Ambient temperature	-10 to +60°C							
Degree of protection	IEC Standard IP67, JIS C0920 (water-tight), oil resistance							
Weight g	1 m:10 3 m:29							

*1 : Refer to Ending Page 1 for detailed switch specifications and dimensions.
*2 : Switches other than the above models, such as switches with connectors, are also available. Refer to Ending Page 1.
*3 : The max. load current is 20 mA at 25°C. The current is lower than 20 mA if the operating ambient temperature around the switch is higher than 25°C. (5 to 10 mA at 60°C)
*4 : The F-switch uses a bend-resistant lead wire.

Cylinder weight table

(Unit: g)

Stroke (mm)	5		10		15		20		25		30		Weight per switch
Bore size (mm)	No switch	With switch	No switch	With switch	No switch	With switch	No switch	With switch	No switch	With switch	No switch	With switch	
ø6	27	29	30	32	32	34	35	37	38	40	41	43	Refer to the weight in the switch specifications.
ø8	29	32	34	37	39	42	44	47	48	51	53	56	
ø12	35	45	43	53	52	62	61	71	70	80	79	89	
ø16	54	70	66	82	79	95	92	108	104	120	117	133	

Theoretical thrust table

(Unit: N)

Bore size (mm)	Operating direction	Working pressure MPa										
		0.1	0.15	0.2	0.3	0.4	0.5	0.6	0.7	0.8	0.9	1.0
ø6	Push	-	4.24	5.65	8.48	11.3	14.1	17.0	19.8	22.6	25.4	28.3
	Pull	-	2.36	3.14	4.71	6.28	7.85	9.42	11.0	12.6	14.1	15.7
ø8	Push	-	7.54	10.1	15.1	20.1	25.1	30.2	35.2	40.2	45.2	50.3
	Pull	-	4.59	6.13	9.19	12.3	15.3	18.4	21.4	24.5	27.6	30.6
ø12	Push	11.3	17.0	22.6	33.9	45.2	56.5	67.9	79.2	90.5	1.02×10^2	1.13×10^2
	Pull	8.48	12.7	17.0	25.4	33.9	42.4	50.9	59.4	67.9	76.3	84.8
ø16	Push	20.1	30.2	40.2	60.3	80.4	1.01×10^2	1.21×10^2	1.41×10^2	1.61×10^2	1.81×10^2	2.01×10^2
	Pull	15.1	22.6	30.2	45.2	60.3	75.4	90.5	1.06×10^2	1.21×10^2	1.36×10^2	1.51×10^2

SCP*3
CMK2
CMA2
SCM
SCG
SCA2
SCS2
CKV2
CAV2/COVP/N2
SSD2
SSG
SSD
CAT
MDC2
MVC
SMG
MSD/MSDG
FC*
STK
SRL3
SRG3
SRM3
SRT3
MRL2
MRG2
SM-25
ShkAbs
FJ
FK
Spd Contr
Ending

How to order

● No switch (without magnet for switch)

MSD-K - 6 - 5 ———— R

● With switch (built-in magnet for switch)

MSD-KL - 6 - 5 - F0H - R - R

Ⓐ Model No.

Ⓑ Bore size

Ⓒ Stroke

Ⓓ Switch model No. *1 *2

Ⓔ Switch quantity

Ⓕ Option *3

Code	Description	
Ⓐ Model No.		
MSD-K	Double acting/high load	No switch
MSD-KL		With switch

Ⓑ Bore size (mm)	
6	ø6
8	ø8
12	ø12
16	ø16

Ⓒ Stroke (mm)	
5	5
10	10
15	15
20	20
25	25
30	30

Ⓓ Switch model No.

Axial lead wire	Radial lead wire	Contact	Voltage AC	Voltage DC	Indicator	Lead wire
F0H*	**F0V***	Reed		●	1-color LED	2-wire
-	**F2S***	Proximity		●		
F2H*	**F2V***			●		
-	**F3S***			●		3-wire
F3H*	**F3V***			●		
F3PH*	**F3PV***			●	1-color LED (PNP output) (made to order)	
F2YH*	**F2YV***			●	2-color LED	2-wire
F3YH*	**F3YV***			●		3-wire

*** Lead wire length**	
Blank	1 m (standard)
3	3 m (option)

Ⓔ Switch quantity	
R	1 on rod side
H	1 on head side
D	2

Ⓕ Option	
Blank	Front piping
R	Rear piping

⚠ Note on model No. selection

*1 : For ø6 or ø8 with switch, use a non-magnetic (stainless steel, etc.) mounting bolt.*2 : For ø12 or ø16 with proximity switch, use a non-magnetic

[Example of model No.]

MSD-KL-6-5-F0H-R-R

Ⓐ Model No. : Double acting/high load/with switch
Ⓑ Bore size : ø6 mm
Ⓒ Stroke : 5 mm
Ⓓ Switch model No. : Reed F0H switch
Ⓔ Switch quantity : 1 on rod side
Ⓕ Option : Rear piping

How to order switch

SW - F0H

↓

Switch model No. (Item Ⓓ above)

Specifications for rechargeable battery

(Catalog No. CC-1226A)

● Design compatible with rechargeable battery manufacturing process

MSD-K -……- P4*

Switch selection table

Switches may not be installable depending on relations between cylinder installation and stroke.
Refer to the table below to select a switch.
Switches cannot be used for side mounting in the following combinations.
·Combinations in which F2YH, F3YH or F3PH is mounted at the switch mounting position H with stroke 5 mm for ø6
·Combinations in which F2YH, F3YH or F3PH is mounted at the switch mounting position H with stroke 5 mm for ø8
(Refer to page 1440 for the min. stroke with switch)

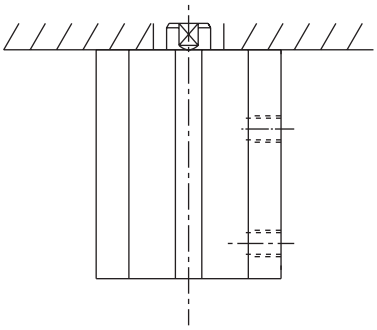
For rod side installation

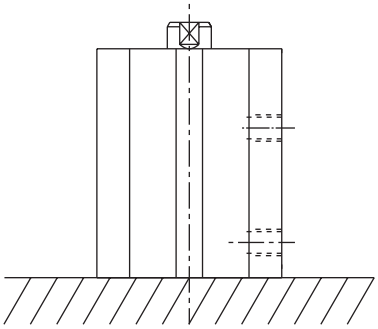
For head side installation

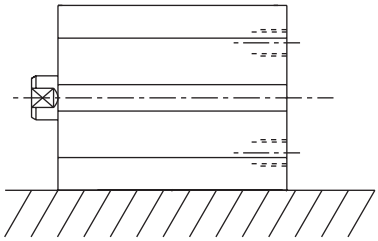
For side installation

● For rod side installation

Bore size (mm)	Stroke (mm)	Reed switch				Proximity switch									
		F0H		F0V		F2S/F3S		F2H/F3H		F2V/F3V		F2YH/F3YH/F3PH		F2YV/F3YV/F3PV	
		Switch position		Switch position		Switch position		Switch position		Switch position		Switch position		Switch position	
		R	H	R	H	R	H	R	H	R	H	R	H	R	H
ø6	5	○	○	○	○	○	○	○	○	○	○	○	×	○	○
	10	○	○	○	○	○	○	○	○	○	○	○	○	○	○
	15 to	○	○	○	○	○	○	○	×	○	○	○	○	○	◯
ø8	5	○	○	○	○	○	○	○	○	○	○	○	○	○	○
	10	○	○	○	○	○	○	○	○	○	○	○	○	○	○
	15 to	○	○	○	○	○	○	○	×	○	○	○	○	○	◯
ø12	5	○	○	○	○	○	○	○	○	○	○	○	○	○	○
	10	○	○	○	○	○	○	○	○	○	○	○	○	○	○
	15 to	○	○	○	○	○	○	○	×	○	○	○	○	○	◯
ø16	5	○	○	○	○	○	○	○	○	○	○	○	○	○	○
	10	○	○	○	○	○	○	○	○	○	○	○	○	○	○
	15 to	○	○	○	○	○	○	○	×	○	○	○	○	○	◯

● For head side installation

Bore size (mm)	Stroke (mm)	Reed switch				Proximity switch									
		F0H		F0V		F2S/F3S		F2H/F3H		F2V/F3V		F2YH/F3YH/F3PH		F2YV/F3YV/F3PV	
		Switch position		Switch position		Switch position		Switch position		Switch position		Switch position		Switch position	
		R	H	R	H	R	H	R	H	R	H	R	H	R	H
ø6	5	×	○	○	○	○	○	×	○	○	○	×	×	◯	○
	10	○	○	○	○	○	○	×	○	○	○	×	○	◯	○
	15 to	○	○	○	○	○	○	○	○	○	○	○	○	○	○
ø8	5	×	○	○	○	○	○	×	○	○	○	×	○	◯	○
	10	○	○	○	○	○	○	×	○	○	○	×	○	◯	○
	15 to	○	○	○	○	○	○	○	○	○	○	○	○	○	○
ø12	5	×	○	○	○	○	○	×	○	○	○	×	○	◯	○
	10	○	○	○	○	○	○	○	○	○	○	×	○	◯	○
	15 to	○	○	○	○	○	○	○	○	○	○	○	○	○	○
ø16	5	×	○	○	○	○	○	×	○	○	○	×	○	◯	○
	10	○	○	○	○	○	○	○	○	○	○	○	○	◯	○
	15 to	○	○	○	○	○	○	○	○	○	○	○	○	○	○

SCP*3
CMK2
CMA2
SCM
SCG
SCA2
SCS2
CKV2
CAV2/COVP/N2
SSD2
SSG
SSD
CAT
MDC2
MVC
SMG
MSD/MSDG
FC*
STK
SRL3
SRG3
SRM3
SRT3
MRL2
MRG2
SM-25
ShkAbs
FJ
FK
Spd Contr
Ending

Internal structure and parts list

● MSD-K-6/8/12

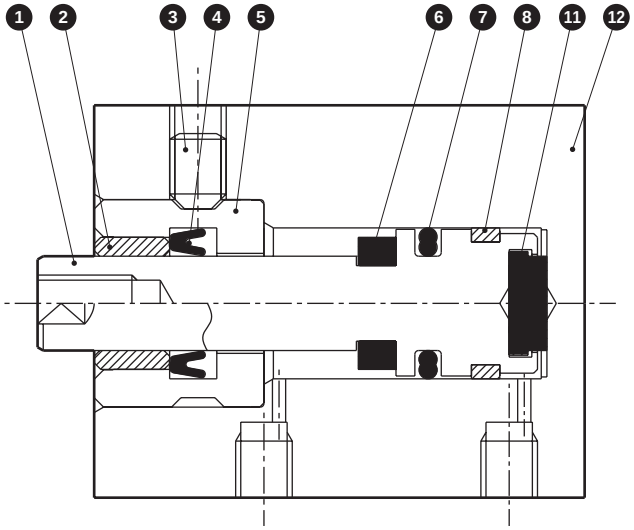

● MSD-KL-6/8/12

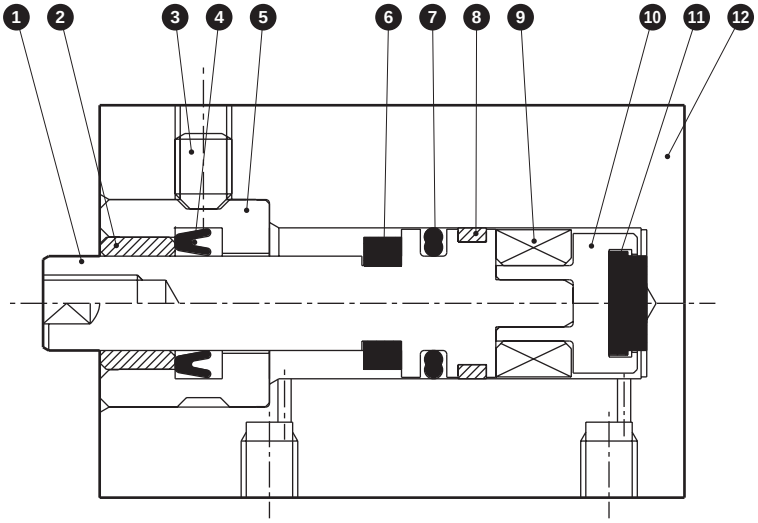

Cannot be disassembled

No.	Part name	Material	Remarks	No.	Part name	Material	Remarks
1	Piston	Stainless steel		7	Piston packing	Nitrile rubber	
2	Bush	Oil-impregnated copper alloy		8	Wear ring	Acetal resin	
3	Hexagon socket set screw	Stainless steel		9	Magnet	Plastic	
4	Rod packing	Nitrile rubber		10	Adaptor	Aluminum alloy	
5	Rod metal	Stainless steel		11	Cushion rubber H	Urethane rubber	
6	Cushion rubber R	Urethane rubber		12	Body	Aluminum alloy	Hard alumite

Internal structure and parts list

● MSD-K-16

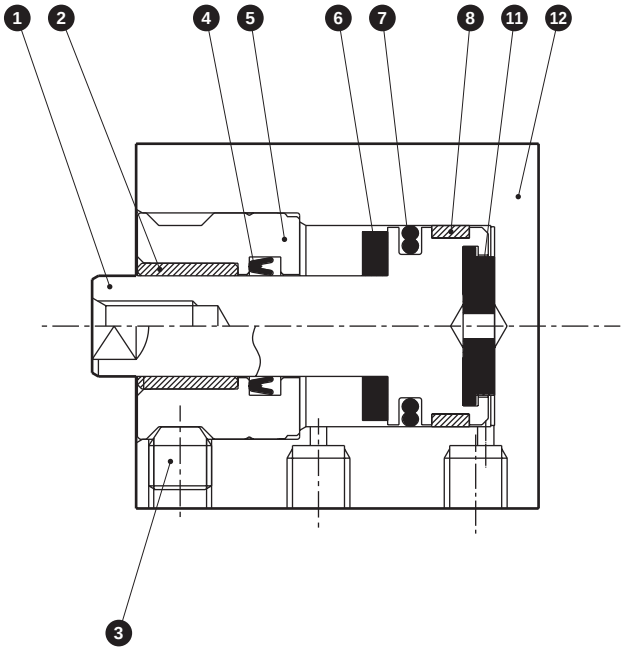

● MSD-KL-16

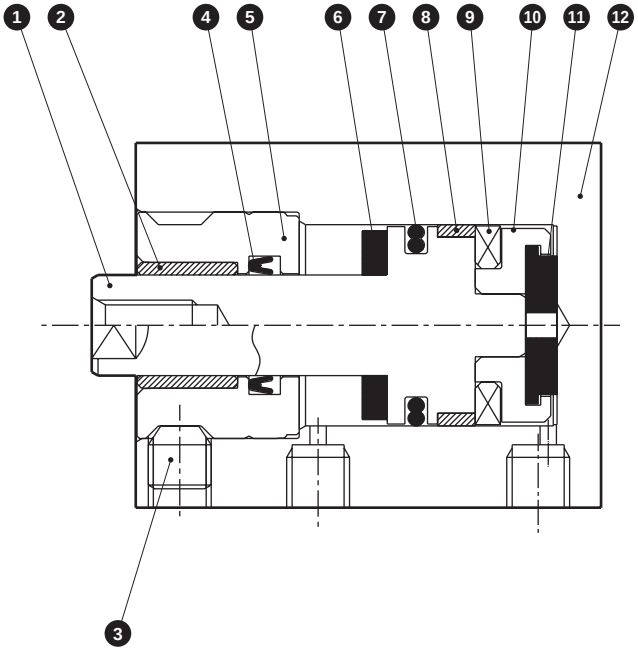

Cannot be disassembled

No.	Part name	Material	Remarks	No.	Part name	Material	Remarks
1	Piston	Stainless steel		7	Piston packing	Nitrile rubber	
2	Bush	Oil-impregnated copper alloy		8	Wear ring	Acetal resin	
3	Hexagon socket set screw	Stainless steel		9	Magnet	Plastic	
4	Rod packing	Nitrile rubber		10	Adaptor	Aluminum alloy	
5	Rod metal	Stainless steel		11	Cushion rubber H	Urethane rubber	
6	Cushion rubber R	Urethane rubber		12	Body	Aluminum alloy	Hard alumite

SCP*3
CMK2
CMA2
SCM
SCG
SCA2
SCS2
CKV2
CAV2/COVP/N2
SSD2
SSG
SSD
CAT
MDC2
MVC
SMG
MSD/MSDG
FC*
STK
SRL3
SRG3
SRM3
SRT3
MRL2
MRG2
SM-25
ShkAbs
FJ
FK
Spd Contr
Ending

Dimensions

● MSD-K (L)-6/8/12

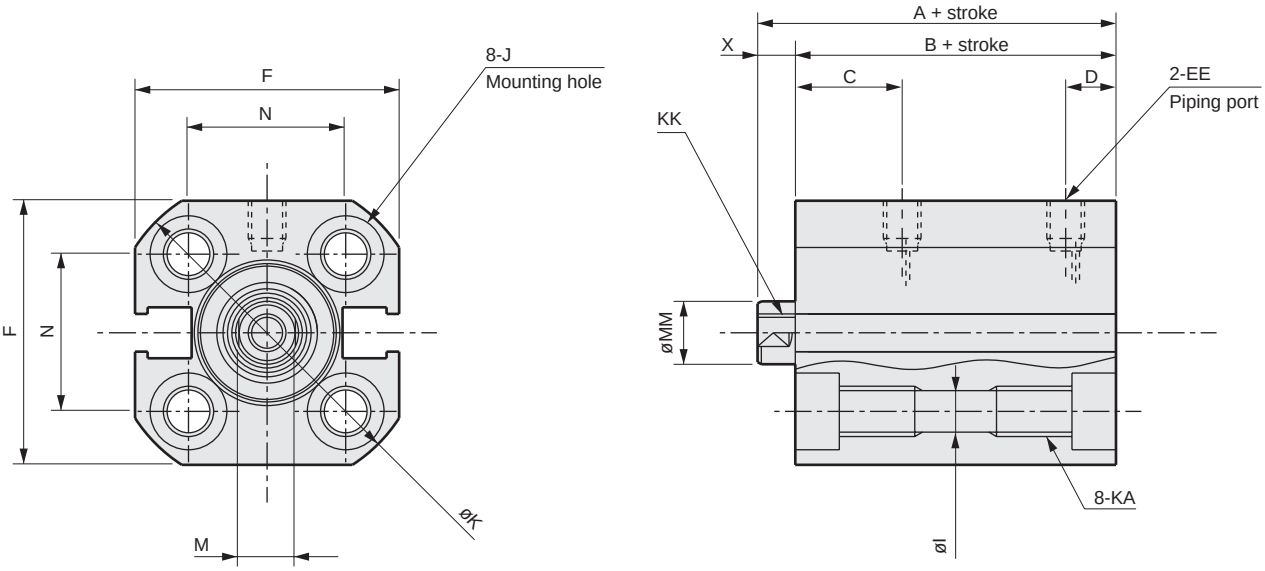

● MSD-K(L)-6/8/12-*-R (rear piping)

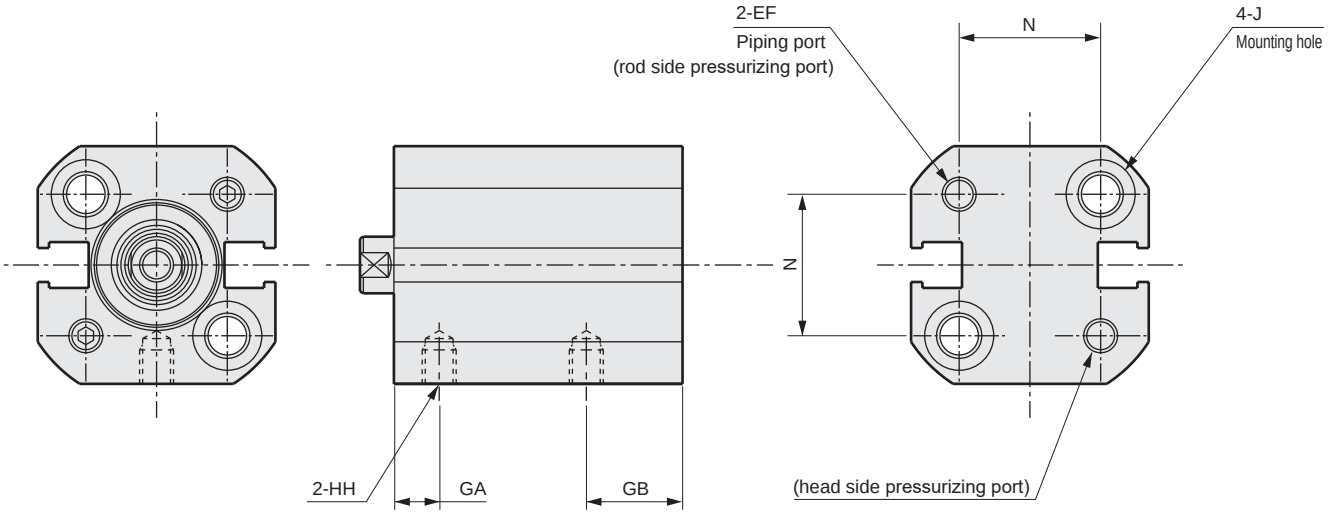

Bore size (mm)	No switch		With switch		Common dimensions for types with/without switches											
	A	B	A	B	C	D	EE	EF	F	GA	GB	HH	I	J	K	KA
ø6	22.5	19.5	27.5	24.5	7.5	4	M3	M3	19	3	8.5	M3 depth 3	3.2	Spot face ø6.1 Depth 3.5	22.5	M4 depth 6
ø8	24	21	29	26	9	4	M3	M3	21	4.5	8.5	M3 depth 3	3.2	Spot face ø6.1 Depth 3.5	25	M4 depth 6
ø12	25.5	22	30.5	27	11.5	5	M5	M3	25	4	10.5	M3 depth 3	3.2	Spot face ø6.1 Depth 3.5	31	M4 depth 6

Bore size (mm)	Common dimensions for types with/without switches				
	KK	M	MM	N	X
ø6	M2.5 depth 4	3.5	4	11	3
ø8	M3 depth 5	4.5	5	12.5	3
ø12	M3 depth 6	5	6	15.5	3.5

Dimensions

● MSD-K(L)-16

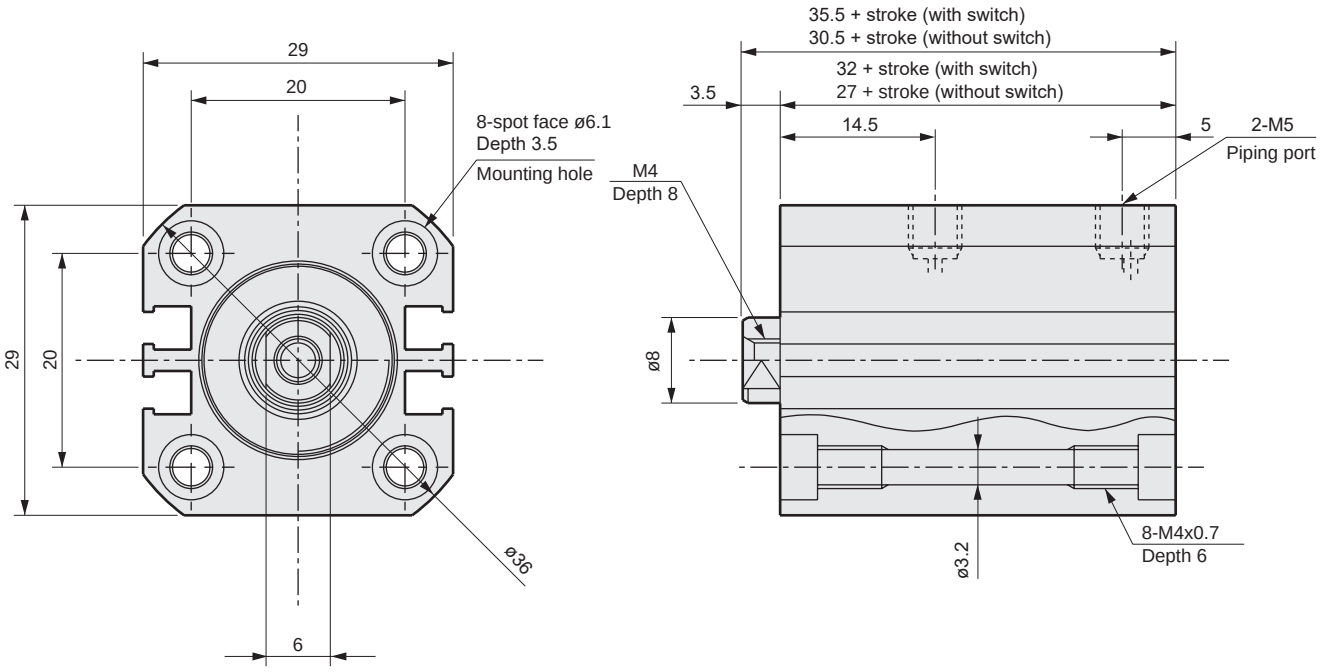

● MSD-K(L)-16-*-R (rear piping)

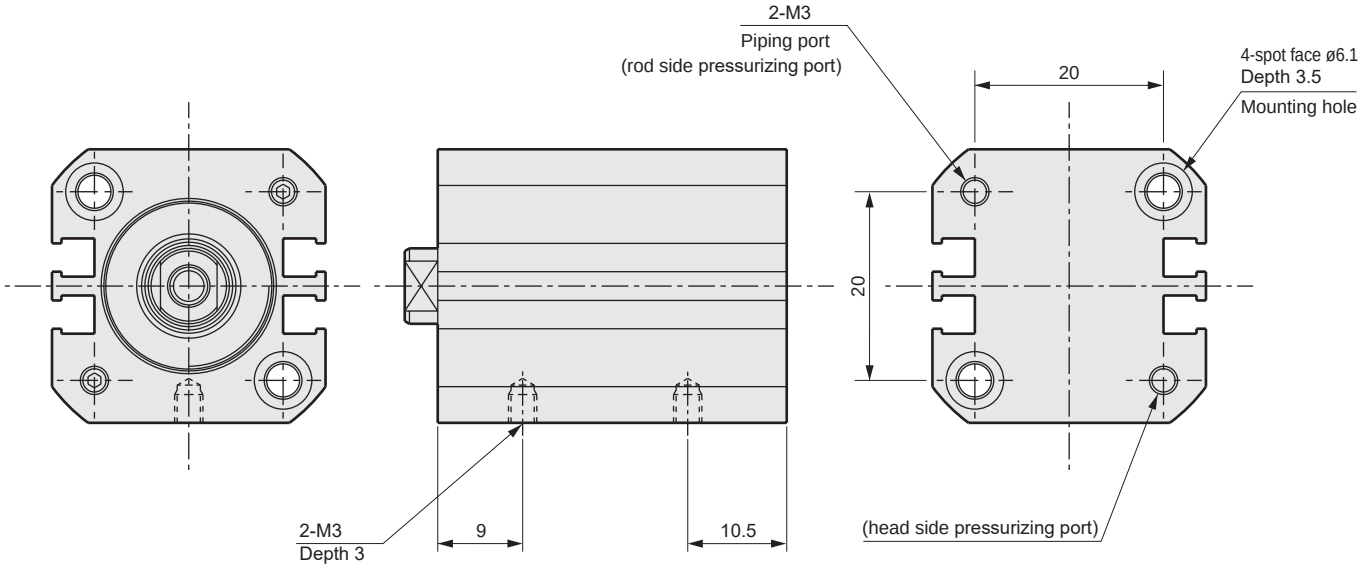

SCP*3
CMK2
CMA2
SCM
SCG
SCA2
SCS2
CKV2
CAV2/COVP/N2
SSD2
SSG
SSD
CAT
MDC2
MVC
SMG
MSD/MSDG
FC*
STK
SRL3
SRG3
SRM3
SRT3
MRL2
MRG2
SM-25
ShkAbs
FJ
FK
Spd Contr
Ending

Switch mounting position (ø6/ø8)

● Reed switch

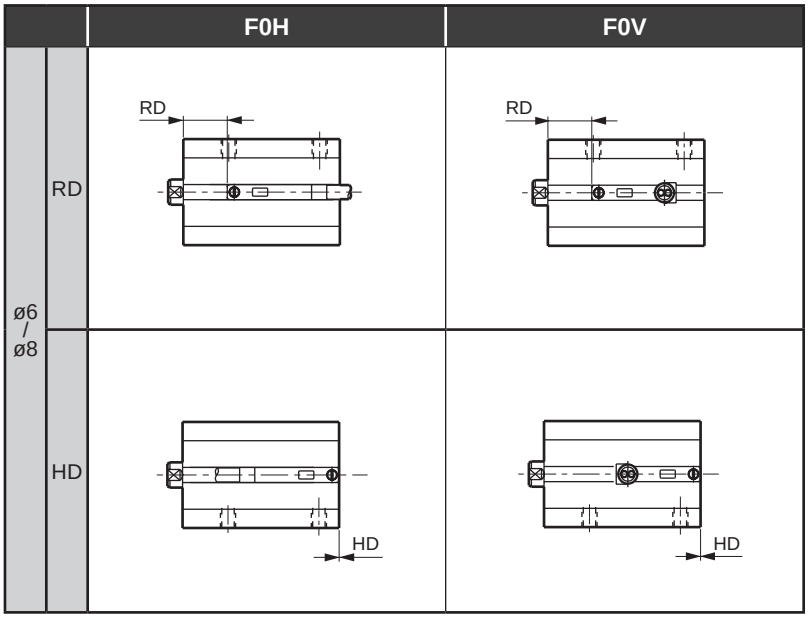

● Proximity switch

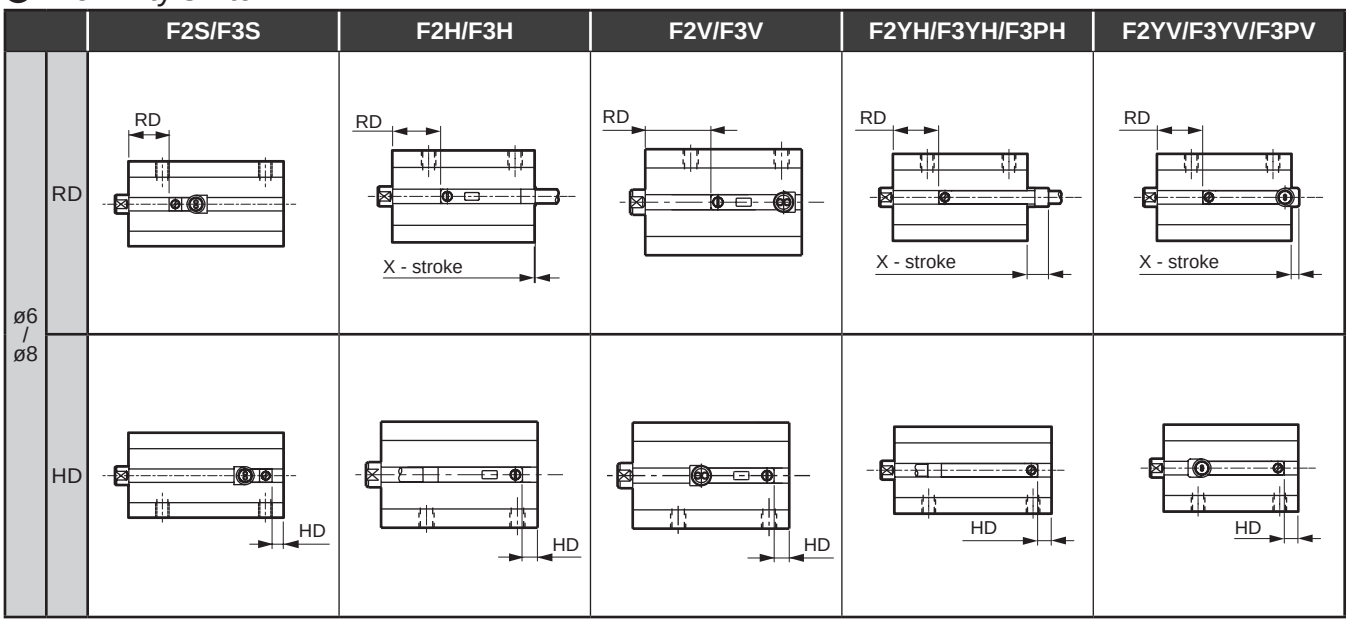

Switch mounting position dimensions

(Unit: mm)

Model	Bore size (mm)	Reed switch				Proximity switch												
		F0H		F0V		F2S/F3S		F2H/F3H			F2V/F3V		F2YH/F3YH/F3PH			F2YV/F3YV/F3PV		
		RD	HD	RD	HD	RD	HD	RD	HD	X (*1)	RD	HD	RD	HD	X (*1)	RD	HD	X (*1)
MSD-KL	ø6	6.0	0	6.0	0	9	2.5	10	3.5	5.2	10	3.5	10	3.5	9.7	10	3.5	6.7
	ø8	8.5	0	8.5	0	11.5	1.5	12.5	2.5	6.2	12.5	2.5	12.5	2.5	10.7	12.5	2.5	7.7

*1: X dimensions indicate the switch protrusion from the body end surface. When the X-stroke is negative, there is no protrusion from the body end surface.

Switch mounting position (ø12/ø16)

● Reed switch

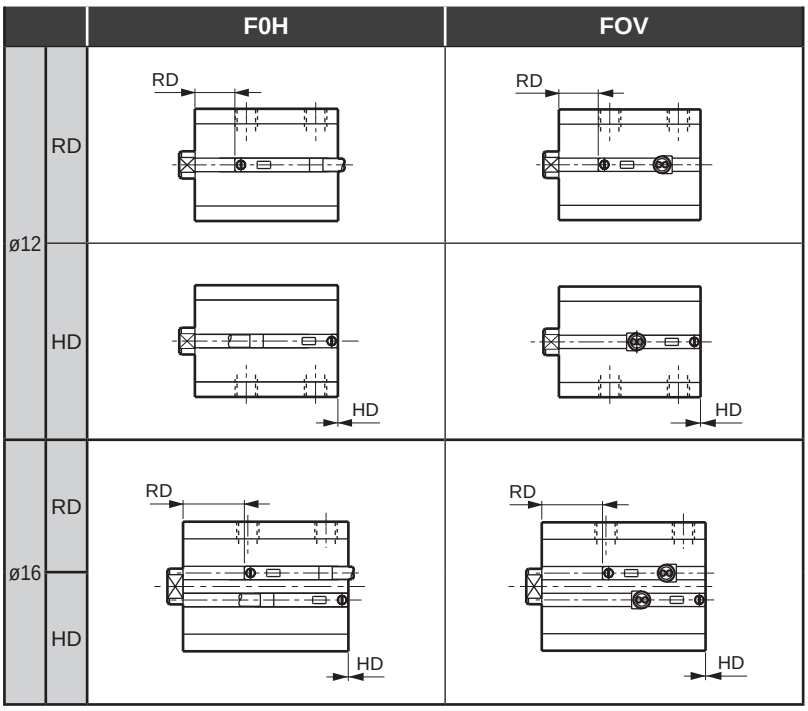

● Proximity switch

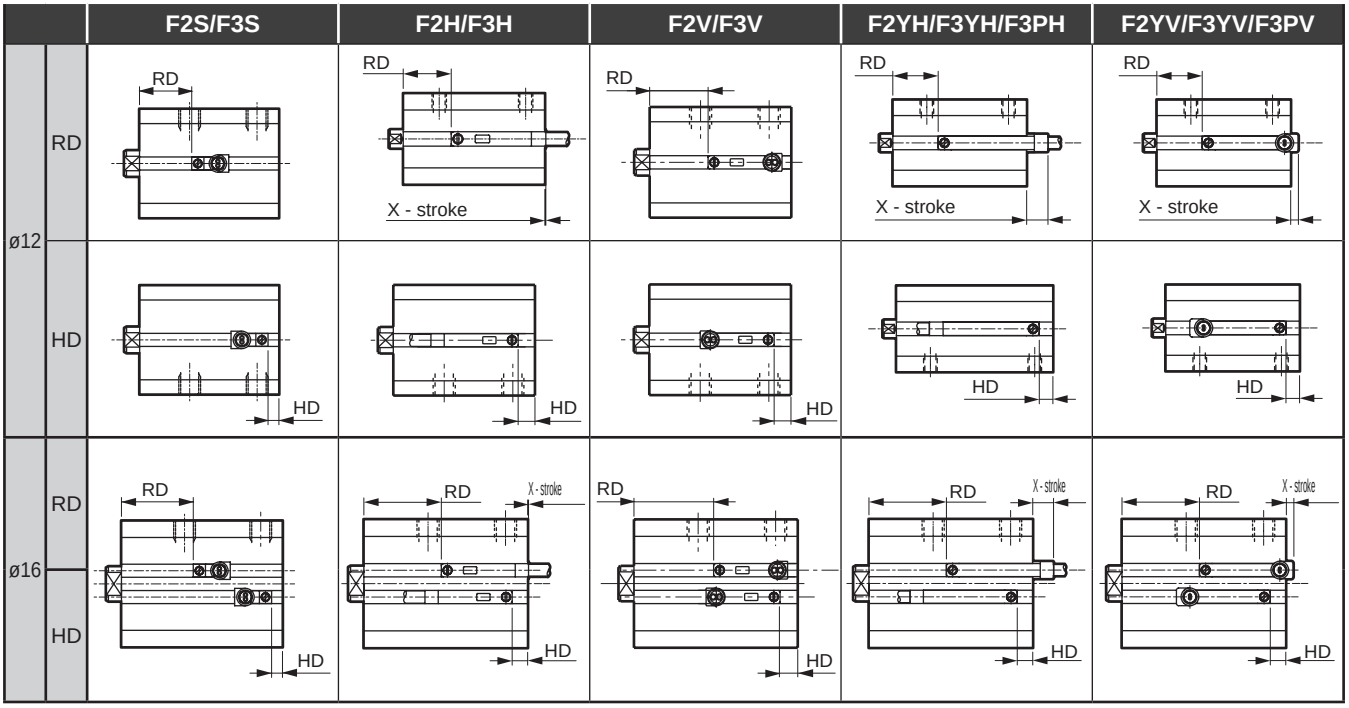

Switch mounting position dimensions

(Unit: mm)

Model	Bore size (mm)	Reed switch				Proximity switch												
		F0H		F0V		F2S/F3S		F2H/F3H			F2V/F3V		F2YH/F3YH/F3PH			F2YV/F3YV/F3PV		
		RD	HD	RD	HD	RD	HD	RD	HD	X (*1)	RD	HD	RD	HD	X (*1)	RD	HD	X (*1)
MSD-KL	ø12	9.0	0	9.0	0	12	2.5	13	3.5	5.7	13	3.5	13	3.5	10.2	13	3.5	7.2
	ø16	14.0	0	14.0	0	16.5	2.5	17.5	3.5	5.2	17.5	3.5	17.5	3.5	9.7	17.5	3.5	6.7

*1: X dimensions indicate the switch protrusion from the body end surface. When the X-stroke is negative, there is no protrusion from the body end surface.

Small compact cylinder double acting/fine speed

Single rod **MSD-F Series**

● Bore size: ø6, ø8

High load **MSD-KF Series**

● Bore size: ø6, ø8, ø12, ø16

JIS symbol

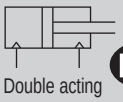

RoHS CAD

Specifications

Item		MSD-F/MSD-LF (with switch)		MSD-KF/MSD-KLF (with switch)			
Bore size mm		ø6	ø8	ø6	ø8	ø12	ø16
Actuation		Double acting/single rod					
Working fluid		Compressed air					
Max. working pressure MPa		1.0 (≈150 psi, 10 bar)					
Min. working pressure MPa		0.15 (≈22 psi, 1.5 bar)		0.15 (≈22 psi, 1.5 bar)		0.1 (≈15 psi, 1 bar)	
Proof pressure MPa		1.6 (≈230 psi, 16 bar)					
Ambient temperature °C		5 (41°F) to 60 (140°F)					
Port size	Body side surface port	M3		M3		M5	
	Rear common port	———		———		M3	
Stroke tolerance mm		$^{+0.5}_{0}$		$^{+2.0}_{0}$			
Working piston speed mm/s		1 to 200					
Cushion		None		With rubber cushion			
Lubrication		Lubrication not possible					
Allowable absorbed energy J		This product cannot absorb the energy generated by an external load mounted on the cylinder. When using the product with no load, select high load or separately provide a shock absorber on the outside.		0.004	0.014	0.044	0.110

Stroke

Bore size (mm)	Standard stroke (mm)	Max. stroke (mm)	Min. stroke with two switches (mm)		Min. stroke with one switch (mm)	
			Reed switch	Proximity switch	Reed switch	Proximity switch
ø6	5/10/15/20/25/30	30	10	5	5	5
ø8	5/10/15/20/25/30	30	10	5	5	5
ø12	5/10/15/20/25/30	30	10	5	5	5
ø16	5/10/15/20/25/30	30	10	5	5	5

Note: Products with stroke other than standard stroke are not available.

Switch specifications

Item	2-wire reed	2-wire proximity			3-wire proximity			
	FOH/V	F2H/V	F2S	F2YH/V	F3H/V	F3S	F3PH/V (Made to order)	F3YH/V
Applications	Dedicated for programmable controller				For programmable controller, relay			
Output method	-				NPN output	NPN output	PNP output	NPN output
Power supply voltage	-	-	-	-	10 to 28 VDC	10 to 28 VDC	4.5 to 28 VDC	10 to 28 VDC
Load voltage	24 VDC	10 to 30 VDC	10 to 30 VDC	24 VDC ±10%	30 VDC or less			
Load current	5 to 20 mA (*3)				50 mA or less			
Current consumption	-	-	-	-	≤10 mA (ON) at 24 VDC	10 mA or less with 24 VDC		
Internal voltage drop	4V or less				0.5V or less	0.5V or less	0.5 V or less at 30 mA	0.5V or less
Indicator	Yellow LED (Lit when ON)		LED (Lit when ON)	Red/green LED (Lit when ON)	Yellow LED (Lit when ON)	LED (Lit when ON)	Yellow LED (Lit when ON)	Red/green LED (Lit when ON)
Leakage current	1 mA or less				10 μA or less			
Lead wire length	Standard 1 m (oil resistant vinyl cabtyre cable 2-conductor 0.15 mm²)				Standard 1 m (oil resistant vinyl cabtyre cable 3-conductor 0.15 mm²)			
Shock resistance	294 m/s²	980 m/s²						
Insulation resistance	20 MΩ and over with 500 VDC megger							
Withstand voltage	No failure after 1 minute of 1,000 VAC application.							
Ambient temperature	-10 to +60°C							
Degree of protection	IEC Standard IP67, JIS C0920 (water-tight), oil resistance							
Weight g	1 m:10 3 m:29							

*1 : Refer to Ending Page 1 for detailed switch specifications and dimensions.
*2 : Switches other than the above models, such as switches with connectors, are also available. Refer to Ending Page 1.
*3 : The max. load current is 20 mA at 25°C. The current is lower than 20 mA if the operating ambient temperature around the switch is higher than 25°C. (5 to 10 mA at 60°C)
*4 : The F-switch uses a bend-resistant lead wire.

Cylinder weight table

Same as MSD Series (double acting/single rod) and MSD-K Series (double acting/high load). Refer to pages 1423 and 1441.

How to order

● No switch (without magnet for switch)

MSD-F - 6 - 5 ——— ○

● With switch (built-in magnet for switch)

MSD-LF - 6 - 5 - F2V - R - ○

Ⓐ Model No.
Ⓑ Bore size
Ⓒ Stroke
Ⓓ Switch model No. *1 *2
Ⓔ Switch quantity
Ⓕ Option *3

Code	Description	Ⓐ Model No. Double acting/ single rod MSD-F MSD-LF MSD-KLF	Double acting/ high load MSD-KF
Ⓑ Bore size (mm)			
6	ø6	●	●
8	ø8	●	●
12	ø12		●
16	ø16		●
Ⓒ Stroke (mm)			
5	5	●	●
10	10	●	●
15	15	●	●
20	20	●	●
25	25	●	●
30	30	●	●

Ⓓ Switch model No.

Axial lead wire	Radial lead wire	Contact	Voltage AC	Voltage DC	Indicator	Lead wire		
F0H*	**F0V***	Reed		●	1-color LED	2-wire	●	●
-	**F2S***	Prox.		●			●	●
F2H*	**F2V***			●			●	●
-	**F3S***			●		3-wire	●	●
F3H*	**F3V***			●			●	●
F3PH*	**F3PV***			●	1-color LED (PNP output) (custom)		●	●
F2YH*	**F2YV***			●	2-color LED	2-wire	●	●
F3YH*	**F3YV***			●		3-wire	●	●

*** Lead wire length**			
Blank	1 m (standard)	●	●
3	3 m (option)	●	●

Ⓔ Switch quantity			
R	1 on rod side	●	●
H	1 on head side	●	●
D	2	●	●

Ⓕ Option						
	Bore size (ø)	All bore sizes	6	8	12	16
Blank	Front piping port	●	●	●	●	●
R	Rear piping port				●	●

⚠ Note on model No. selection

*1 : For ø6 or ø8 with switch, use a non-magnetic (stainless steel, etc.) mounting bolt.
*2 : For ø12 or ø16 with proximity switch, use a non-magnetic (stainless steel, etc.) through bolt.
*3 : For rear piping, body side installation is possible. Note that 2 bolts are used for rod side installation and head side installation.

[Example of model No.]

MSD-KLF-12-10-F0H-R-R

Ⓐ Model No. : Double acting/fine speed/ high load with switch
Ⓑ Bore size : ø12 mm
Ⓒ Stroke : 10 mm
Ⓓ Switch model No. : Reed switch F0H, lead wire 1 m
Ⓔ Switch quantity : 1 on rod side
Ⓕ Piping port position: Rear piping

How to order switch

SW - F0H

Switch model No. (Item Ⓓ at right)

Theoretical thrust table

(Unit: N)

Bore size (mm)	Operating direction	Working pressure MPa 0.1	0.15	0.2	0.3	0.4	0.5	0.6	0.7	0.8	0.9	1.0
ø6	Push	-	4.24	5.65	8.48	11.3	14.1	17.0	19.8	22.6	25.4	28.3
	Pull	-	2.36	3.14	4.71	6.28	7.85	9.42	11.0	12.6	14.1	15.7
ø8	Push	-	7.54	10.1	15.1	20.1	25.1	30.2	35.2	40.2	45.2	50.3
	Pull	-	4.59	6.13	9.19	12.3	15.3	18.4	21.4	24.5	27.6	30.6
ø12	Push	11.3	17.0	22.6	33.9	45.2	56.5	67.9	79.2	90.5	1.02×10^2	1.13×10^2
	Pull	8.48	12.7	17.0	25.4	33.9	42.4	50.9	59.4	67.9	76.3	84.8
ø16	Push	20.1	30.2	40.2	60.3	80.4	1.01×10^2	1.21×10^2	1.41×10^2	1.61×10^2	1.81×10^2	2.01×10^2
	Pull	15.1	22.6	30.2	45.2	60.3	75.4	90.5	1.06×10^2	1.21×10^2	1.36×10^2	1.51×10^2

Dimensions

Same as MSD Series (double acting/single rod) and MSD-K Series (double acting/high load).
Refer to pages 1427, 1446 and 1447.

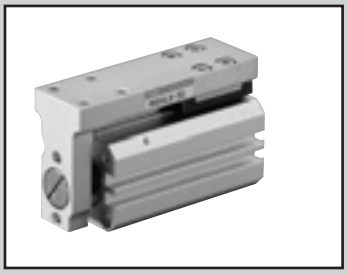

Small guided compact cylinder
Double acting/guided/with switch

MSDG-L Series

● Bore size: ø6/ø8/ø12/ø16

RoHS CAD

Specifications

Item		MSDG-L (with switch)			
Bore size mm		ø6	ø8	ø12	ø16
Actuation		Double acting			
Working fluid		Compressed air			
Max. working pressure MPa		1.0 (≈150 psi, 10 bar)			
Min. working pressure MPa		0.2 (≈29 psi, 2 bar)	0.15 (≈22 psi, 1.5 bar)	0.1 (≈15 psi, 1 bar)	
Proof pressure MPa		1.6 (≈230 psi, 16 bar)			
Ambient temperature °C		5 (41°F) to 60 (140°F)			
Port size	Front piping	M3		M5	
	Rear piping	M3		M3	
Stroke tolerance mm		+2.0 0			
Working piston speed mm/s		50 to 500			
Cushion		With rubber cushion			
Lubrication		Not required (use turbine oil ISO VG32 if necessary for lubrication)			
Allowable absorbed energy J		0.004	0.014	0.044	0.110

Stroke

Bore size (mm)	Standard stroke (mm)	Max. stroke (mm)	Min. stroke with two switches (mm)		Min. stroke with one switch (mm)	
			Reed switch	Proximity switch	Reed switch	Proximity switch
ø6	5/10/15/20/25/30	30	10	5	5	5
ø8	5/10/15/20/25/30	30	10	5	5	5
ø12	5/10/15/20/25/30	30	10	5	5	5
ø16	5/10/15/20/25/30	30	10	5	5	5

Note: Products with stroke other than standard stroke are not available.

Switch specifications

Item	2-wire reed	2-wire proximity			3-wire proximity			
	FOH/V	F2H/V	F2S	F2YH/V	F3H/V	F3S	F3PH/V (Made to order)	F3YH/V
Applications	Dedicated for programmable controller				For programmable controller, relay			
Output method	-				NPN output	NPN output	PNP output	NPN output
Power supply voltage	-	-	-	-	10 to 28 VDC	10 to 28 VDC	4.5 to 29 VDC	10 to 28 VDC
Load voltage	24 VDC	10 to 30 VDC		24 VDC ±10%	30 VDC or less			
Load current	5 to 20 mA (*3)				50 mA or less			
Current consumption	-	-	-	-	≤10 mA (ON) at 24 VDC	10 mA or less with 24 VDC		
Internal voltage drop	4V or less				0.5V or less		0.5 V or less at 30 mA	0.5V or less
Indicator	Yellow LED (Lit when ON)		LED (Lit when ON)	Red/green LED (Lit when ON)	Yellow LED (Lit when ON)	LED (Lit when ON)	Yellow LED (Lit when ON)	Red/green LED (Lit when ON)
Leakage current	1 mA or less				10 μA or less			
Lead wire length	Standard 1 m (oil resistant vinyl cabtyre cable 2-conductor 0.15 mm²)				Standard 1 m (oil resistant vinyl cabtyre cable 3-conductor 0.15 mm²)			
Shock resistance	294 m/s²	980 m/s²						
Insulation resistance	20 MΩ and over with 500 VDC megger							
Withstand voltage	No failure after 1 minute of 1,000 VAC application.							
Ambient temperature	-10 to +60°C							
Degree of protection	IEC Standard IP67, JIS C0920 (water-tight), oil resistance							
Weight g	1 m:10 3 m:29							

*1 : Refer to Ending Page 1 for detailed switch specifications and dimensions.
*2 : Switches other than the above models, such as switches with connectors, are also available. Refer to Ending Page 1.
*3 : The max. load current is 20 mA at 25°C. The current is lower than 20 mA if the operating ambient temperature around the switch is higher than 25°C. (5 to 10 mA at 60°C)
*4 : The F-switch uses a bend-resistant lead wire.

Cylinder weight table

(Unit: g)

Stroke (mm) / Bore size (mm)	5	10	15	20	25	30	Weight per switch
ø6	43	48	52	57	61	66	Refer to the weight in the switch specifications.
ø8	50	56	63	69	76	82	
ø12	76	88	100	112	124	136	
ø16	129	146	163	180	197	214	

Theoretical thrust table

(Unit: N)

Bore size (mm)	Operating direction	Working pressure MPa										
		0.1	0.15	0.2	0.3	0.4	0.5	0.6	0.7	0.8	0.9	1.0
ø6	Push	-	-	5.65	8.48	11.3	14.1	17.0	19.8	22.6	25.4	28.3
	Pull	-	-	3.14	4.71	6.28	7.85	9.42	11.0	12.6	14.1	15.7
ø8	Push	-	7.54	10.1	15.1	20.1	25.1	30.2	35.2	40.2	45.2	50.3
	Pull	-	4.59	6.13	9.19	12.3	15.3	18.4	21.4	24.5	27.6	30.6
ø12	Push	11.3	17.0	22.6	33.9	45.2	56.5	67.9	79.2	90.5	1.02×10^2	1.13×10^2
	Pull	8.48	12.7	17.0	25.4	33.9	42.4	50.9	59.4	67.9	76.3	84.8
ø16	Push	20.1	30.2	40.2	60.3	80.4	1.01×10^2	1.21×10^2	1.41×10^2	1.61×10^2	1.81×10^2	2.01×10^2
	Pull	15.1	22.6	30.2	45.2	60.3	75.4	90.5	1.06×10^2	1.21×10^2	1.36×10^2	1.51×10^2

SCP*3
CMK2
CMA2
SCM
SCG
SCA2
SCS2
CKV2
CAV2/COVP/N2
SSD2
SSG
SSD
CAT
MDC2
MVC
SMG
MSD/MSDG
FC*
STK
SRL3
SRG3
SRM3
SRT3
MRL2
MRG2
SM-25
ShkAbs
FJ
FK
Spd Contr
Ending

How to order

● With switch (built-in magnet for switch)

MSDG-L - 6 - 30 - F0H - D - R

- MSDG-L: Model No.
- 6: Ⓐ Bore size
- 30: Ⓑ Stroke
- F0H: Ⓒ Switch model No. *1 *2
- D: Ⓓ Switch quantity
- R: Ⓔ Option *3

Code	Description
Ⓐ Bore size (mm)	
6	ø6
8	ø8
12	ø12
16	ø16
Ⓑ Stroke (mm)	
5	5
10	10
15	15
20	20
25	25
30	30

Ⓒ Switch model No.

Axial lead wire	Radial lead wire	Contact	Voltage AC	Voltage DC	Indicator	Lead wire
F0H*	**F0V***	Reed		●	1-color LED	2-wire
-	**F2S***	Proximity		●		
F2H*	**F2V***			●		
-	**F3S***			●		3-wire
F3H*	**F3V***			●		
F3PH*	**F3PV***			●	1-color LED (PNP output) (custom)	
F2YH*	**F2YV***			●	2-color LED	2-wire
F3YH*	**F3YV***			●		3-wire

*** Lead wire length**	
Blank	1 m (standard)
3	3 m (option)

Ⓓ Switch quantity	
R	1 on rod side
H	1 on head side
D	2

Ⓔ Option	
Blank	Front piping
R	Rear piping

⚠ Precautions for model No. selection

*1 : For ø6 or ø8 with switch, use a non-magnetic (stainless steel, etc.) mounting bolt.*2 : For ø12 or ø16 with proximity switch, use a non-magnetic (stainless steel, etc.) through bolt.*3 : For rear piping, body side installation is possible.

[Example of model No.]

MSDG-L-6-30-F0H-D-R

Model No.: Double acting/guided with switch

- Ⓐ Bore size : ø6 mm
- Ⓑ Stroke : 30 mm
- Ⓒ Switch model No. : Reed F0H switch
- Ⓓ Switch quantity : 2
- Ⓔ Option : Rear piping

How to order switch

SW - F0H

F0H: Switch model No. (Item Ⓒ above)

Specifications for rechargeable battery

(Catalog No. CC-1226A)

● Design compatible with rechargeable battery manufacturing process

MSDG-L-·····- P4*

Switch selection table

Switches may not be installable depending on relations between cylinder installation and stroke.
Refer to the table below to select a switch.
Switches cannot be used for side mounting in the following combinations.

- Combinations in which F2YH/V, F3YH/V or F3PH/V is mounted at the switch mounting position H with stroke 5 mm
- Combinations in which F2YH, F3YH or F3PH is mounted at the switch mounting position H with stroke 10 mm (Refer to page 1452 for the min. stroke with switch)

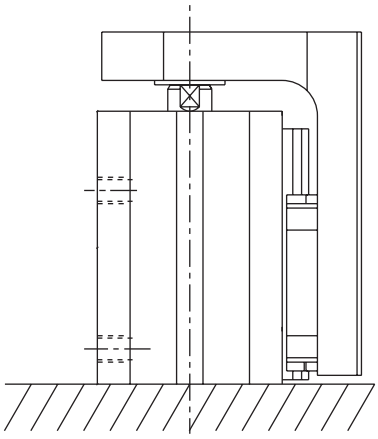

For head side installation

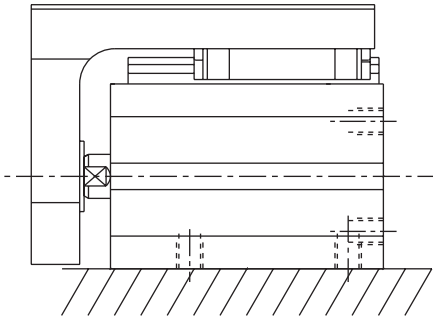

For side installation

● For head side installation

Bore size (mm)	Stroke (mm)	Reed switch				Proximity switch									
		F0H		F0V		F2S/F3S		F2H/F3H		F2V/F3V		F2YH/F3YH/F3PH		F2YV/F3YV/F3PV	
		Switch position		Switch position		Switch position		Switch position		Switch position		Switch position		Switch position	
		R	H	R	H	R	H	R	H	R	H	R	H	R	H
ø6	5	x	○	○	○	○	○	x	○	○	○	x	x	○	○
	10	○	○	○	○	○	○	x	○	○	○	x	○	○	○
	15 to	○	○	○	○	○	○	○	○	○	○	○	○	○	○
ø8	5	x	○	○	○	○	○	x	○	○	○	x	x	○	○
	10	○	○	○	○	○	○	x	○	○	○	x	○	○	○
	15 to	○	○	○	○	○	○	○	○	○	○	○	○	○	○
ø12	5	x	○	○	○	○	○	x	○	○	○	x	○	○	○
	10	○	○	○	○	○	○	x	○	○	○	x	x	○	○
	15 to	○	○	○	○	○	○	○	○	○	○	○	○	○	○
ø16	5	x	○	○	○	○	○	x	○	○	○	x	○	○	○
	10	○	○	○	○	○	○	x	○	○	○	x	○	○	○
	15 to	○	○	○	○	○	○	○	○	○	○	○	○	○	○

Internal structure and parts list

● MSDG-L-6/8/12

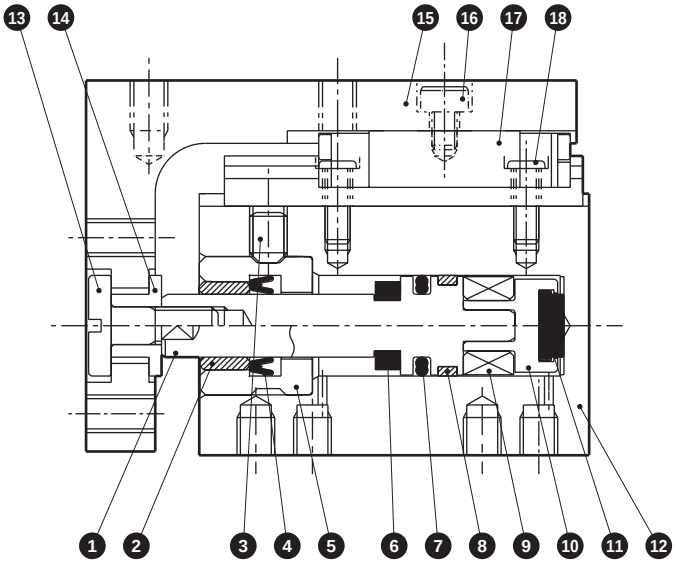

● MSDG-L-16

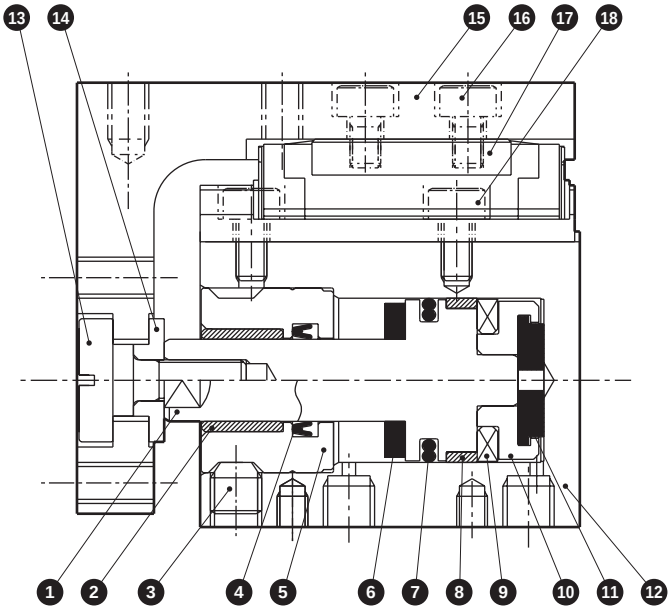

Cannot be disassembled

No.	Part name	Material	Remarks	No.	Part name	Material	Remarks
1	Piston	Stainless steel		10	Adaptor	Aluminum alloy	
2	Bush	Oil-impregnated copper alloy		11	Cushion rubber H	Urethane rubber	
3	Hexagon socket set screw	Stainless steel		12	Body	Aluminum alloy	Hard alumite
4	Rod packing	Nitrile rubber		13	Floating bolt	Steel	Nickeling
5	Rod metal	Stainless steel		14	Floating bush	Stainless steel	
6	Cushion rubber R	Urethane rubber		15	Table	Aluminum alloy	Alumite
7	Piston packing	Nitrile rubber		16	Hexagon socket head cap screw	Stainless steel	
8	Wear ring	Acetal resin		17	High precision guide	Stainless steel	
9	Magnet	Plastic		18	Bolt	Stainless steel	

MEMO

SCP*3
CMK2
CMA2
SCM
SCG
SCA2
SCS2
CKV2
CAV2/ COVP/N2
SSD2
SSG
SSD
CAT
MDC2
MVC
SMG
MSD/ MSDG
FC*
STK
SRL3
SRG3
SRM3
SRT3
MRL2
MRG2
SM-25
ShkAbs
FJ
FK
Spd Contr
Ending

Dimensions

● MSDG-L-6/8/12

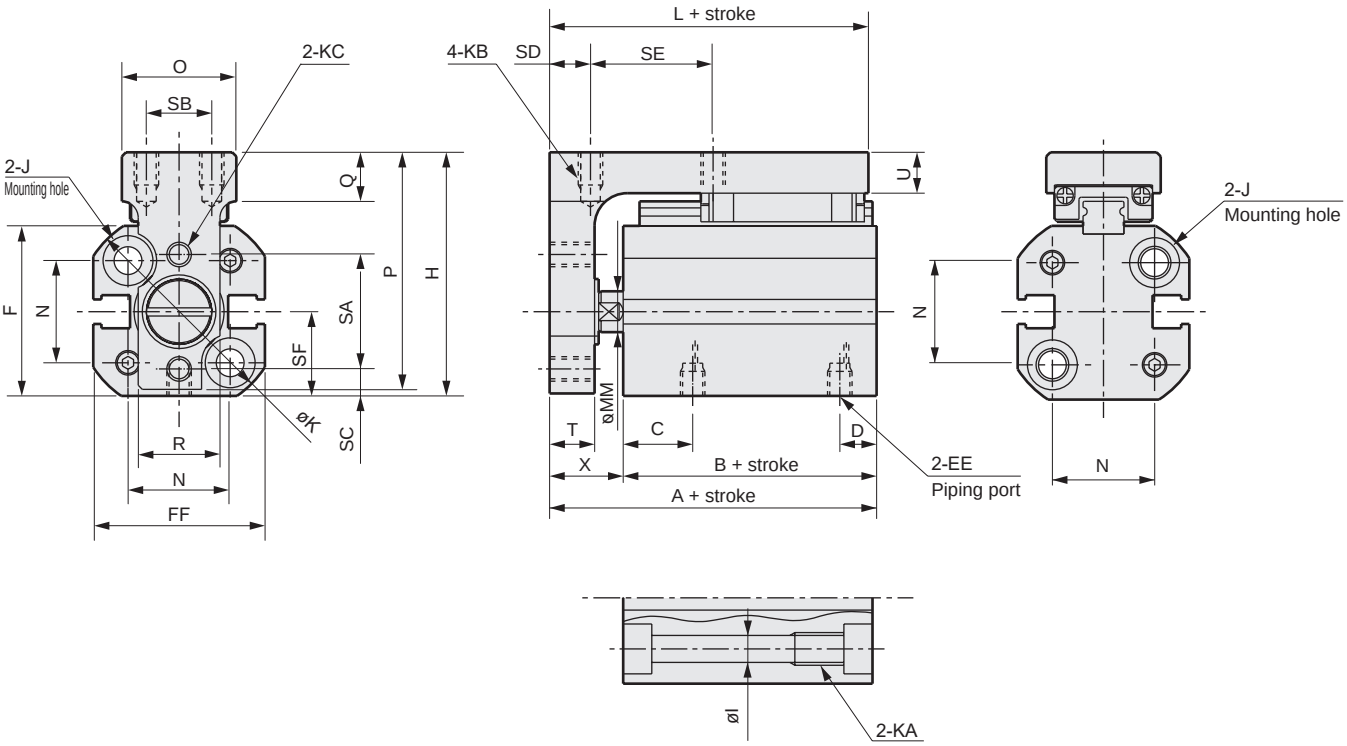

● MSDG-L-6/8/12-*-R (Rear piping)

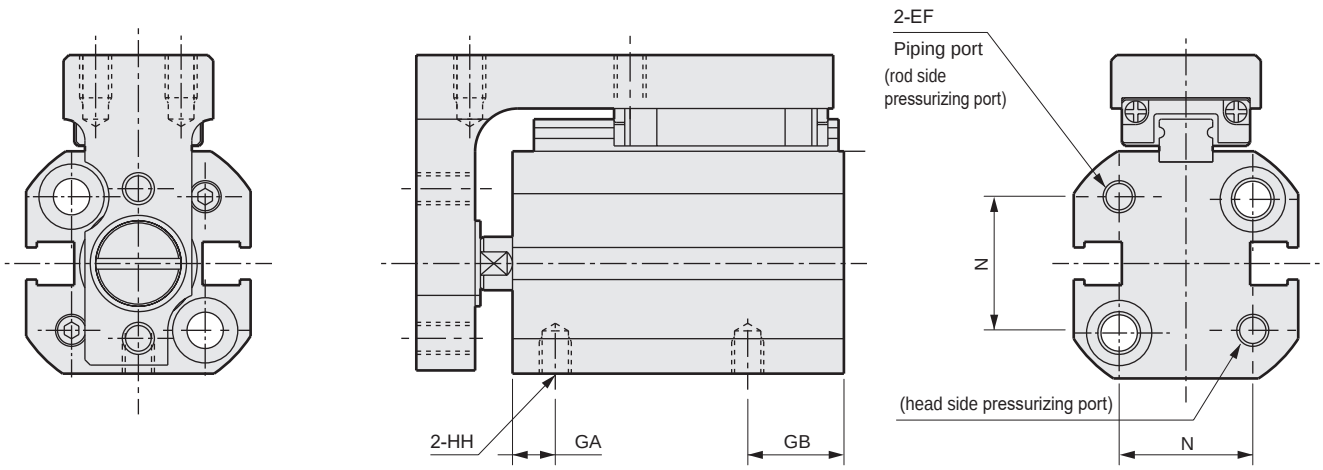

Code / Bore size (mm)	A	B	C	D	EE	EF	F	FF	GA	GB	H	HH	I	J	K	KA	KB	KC
ø6	33.5	24.5	7.5	4	M3	M3	18.8	19	3	8.5	27.8	M3 depth 3	3.2	Spot face ø6.1 depth 3.5	22.5	M4 depth 6	M3 depth 4	M3 (through)
ø8	35	26	9	4	M3	M3	20.8	21	4.5	8.5	29.8	M3 depth 3	3.2	Spot face ø6.1 depth 3.5	25	M4 depth 6	M3 depth 4	M3 (through)
ø12	38	27	11.5	5	M5	M3	24.8	25	4	10.5	36.3	M3 depth 3	3.2	Spot face ø6.1 depth 3.5	31	M4 depth 6	M3 depth 4.5	M3 (through)

Code / Bore size (mm)	L	MM	N	O	P	Q	R	SA	SB	SC	SD	SE	SF	T	U	X
ø6	32	4	11	14	27	6	9.5	12	8	3.3	5	15	9.3	5.5	5	9
ø8	33.5	5	12.5	14	29	6	10	14	8	3.3	5	15	10.3	5.5	5	9
ø12	36.5	6	15.5	19	35	6.5	13	15.5	12	4.5	5	15	12.3	7	6.5	11

Dimensions

● MSDG-L-16

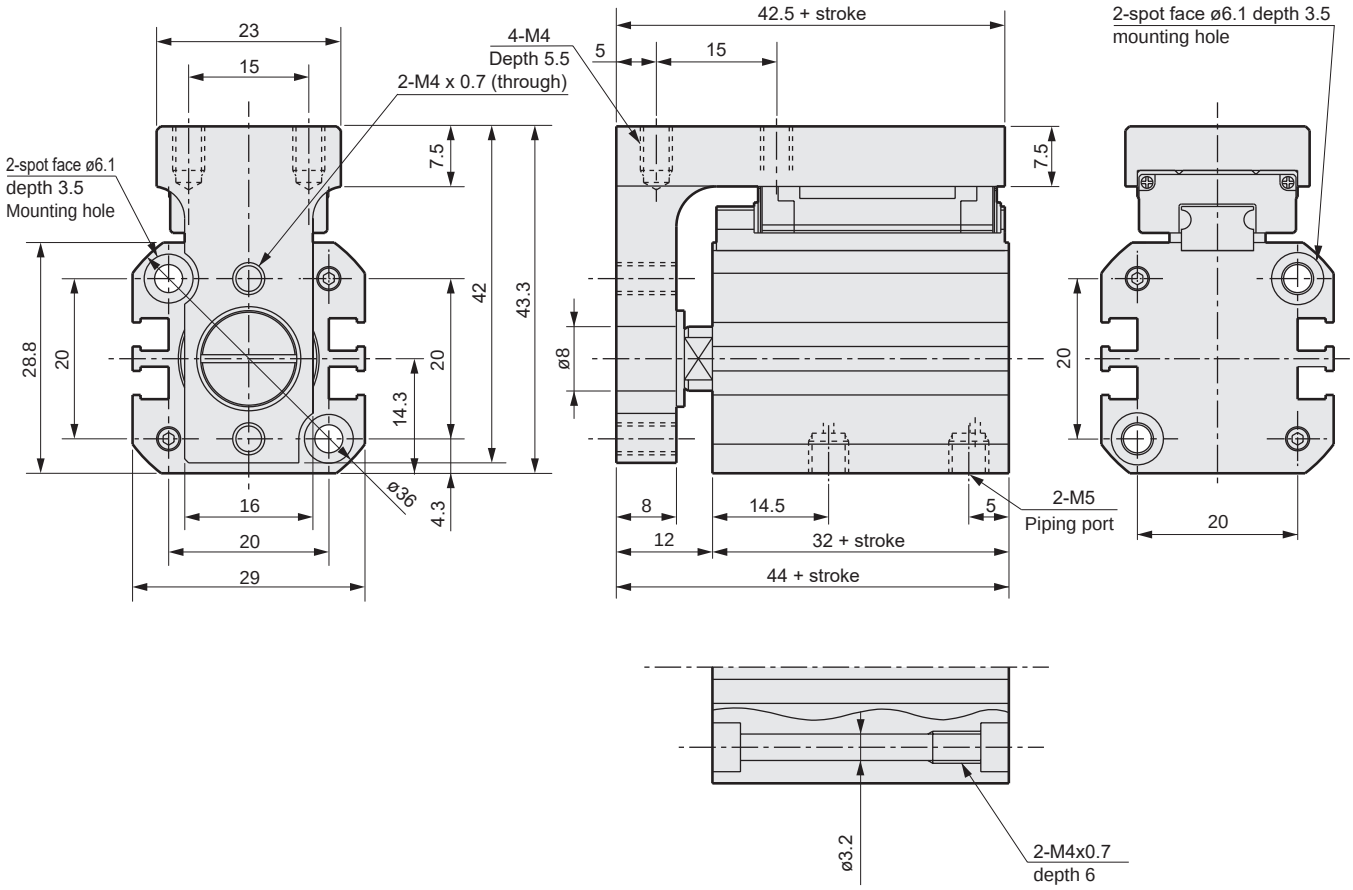

● MSDG-L-16-*-R (Rear piping)

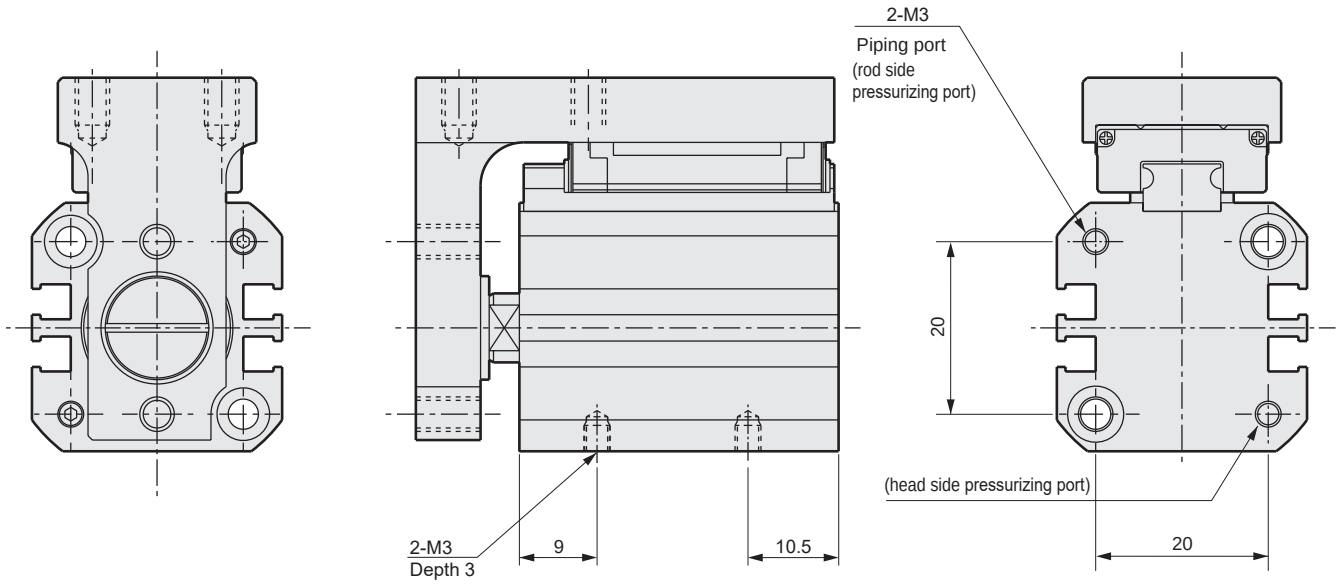

SCP*3
CMK2
CMA2
SCM
SCG
SCA2
SCS2
CKV2
CAV2/COVP/N2
SSD2
SSG
SSD
CAT
MDC2
MVC
SMG
MSD/MSDG
FC*
STK
SRL3
SRG3
SRM3
SRT3
MRL2
MRG2
SM-25
ShkAbs
FJ
FK
Spd Contr
Ending

Switch mounting position (ø6/ø8)

● Reed switch

		F0H	F0V
ø6 / ø8	RD	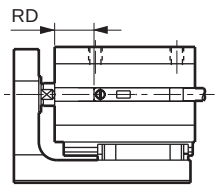	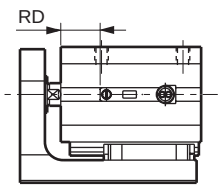
	HD	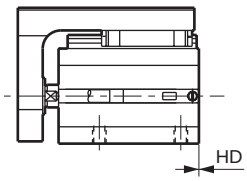	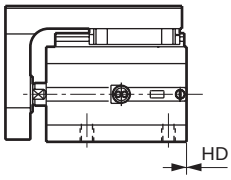

● Proximity switch

		F2S/F3S	F2H/F3H	F2V/F3V	F2YH/F3YH/F3PH	F2YV/F3YV/F3PV
ø6 / ø8	RD	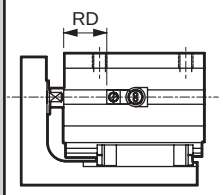	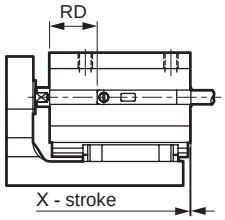	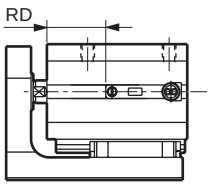	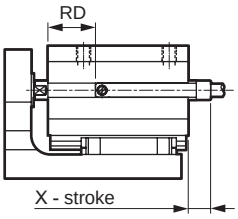	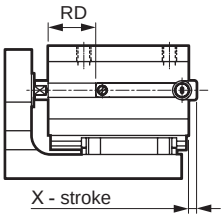
	HD	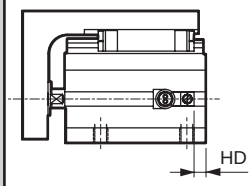	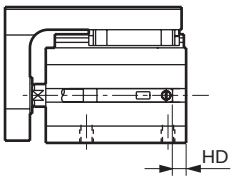	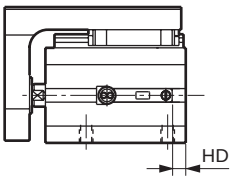	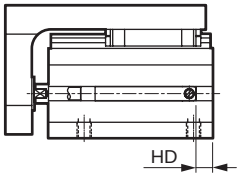	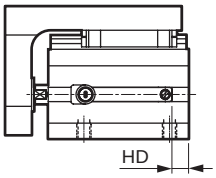

Switch mounting position dimensions

(Unit: mm)

Model	Bore size (mm)	Reed switch				Proximity switch												
		F0H		F0V		F2S/F3S		F2H/F3H			F2V/F3V		F2YH/F3YH/F3PH			F2YV/F3YV/F3PV		
		RD	HD	RD	HD	RD	HD	RD	HD	X (*1)	RD	HD	RD	HD	X (*1)	RD	HD	X (*1)
MSDG-KL	ø6	6.0	0	6.0	0	9	2.5	10	3.5	5.2	10	3.5	10	3.5	9.7	10	3.5	6.7
	ø8	8.5	0	8.5	0	11.5	1.5	12.5	2.5	6.2	12.5	2.5	12.5	2.5	10.7	12.5	2.5	7.7

*1: X dimensions indicate the switch protrusion from the body end surface. When the X-stroke is negative, there is no protrusion from the body end surface.

Switch mounting position (ø12/ø16)

● Reed switch

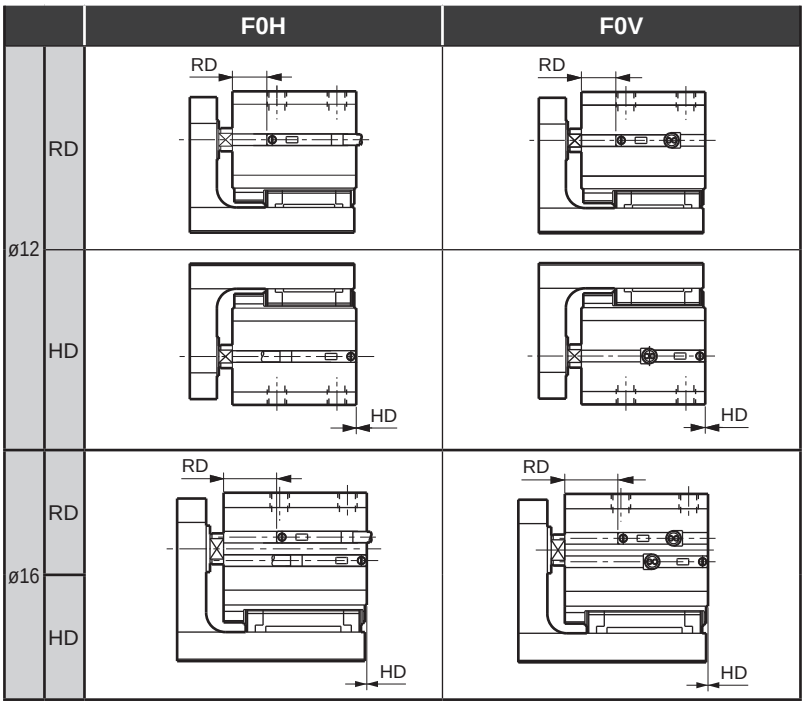

● Proximity switch

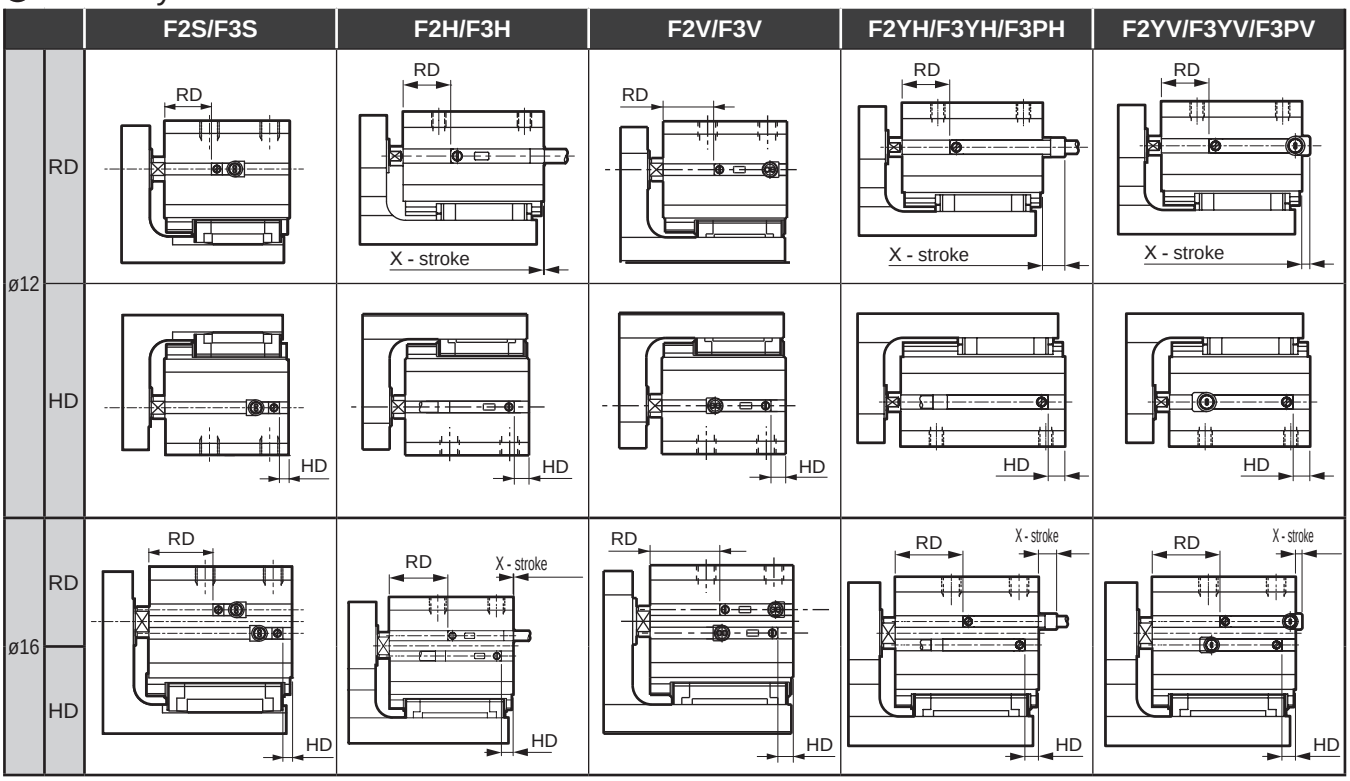

Switch mounting position dimensions

(Unit: mm)

Model	Bore size (mm)	Reed switch				Proximity switch												
		F0H		F0V		F2S/F3S		F2H/F3H			F2V/F3V		F2YH/F3YH/F3PH			F2YV/F3YV/F3PV		
		RD	HD	RD	HD	RD	HD	RD	HD	X (*1)	RD	HD	RD	HD	X (*1)	RD	HD	X (*1)
MSDG-KL	ø12	9.0	0	9.0	0	12	2.5	13	3.5	5.7	13	3.5	13	3.5	10.2	13	3.5	7.2
	ø16	14.0	0	14.0	0	16.5	2.5	17.5	3.5	5.2	17.5	3.5	17.5	3.5	9.7	17.5	3.5	6.7

*1: X dimensions indicate the switch protrusion from the body end surface. When the X-stroke is negative, there is no protrusion from the body end surface.

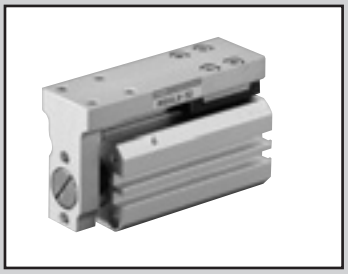

Small guided compact cylinder
Double acting/guided/with switch/fine speed

MSDG-LF Series

● Bore size: ø12/ø16

RoHS CAD

Specifications

Item		MSDG-LF	
Bore size mm		ø12	ø16
Actuation		Double acting/guided	
Working fluid		Compressed air	
Max. working pressure MPa		1.0 (≈150 psi, 10 bar)	
Min. working pressure MPa		0.1 (≈15 psi, 1 bar)	
Proof pressure MPa		1.6 (≈230 psi, 16 bar)	
Ambient temperature °C		5 (41°F) to 60 (140°F)	
Port size	Front piping	M5	
	Rear piping	M3	
Stroke tolerance mm		$^{+2.0}_{0}$	
Working piston speed mm/s		1 to 200	
Cushion		With rubber cushion	
Lubrication		Not available	
Allowable absorbed energy J		0.044	0.110

Stroke

Bore size (mm)	Standard stroke (mm)	Max. stroke (mm)	Min. stroke with two switches (mm)		Min. stroke with one switch (mm)	
			Reed switch	Proximity switch	Reed switch	Proximity switch
ø12	5/10/15/20/25/30	30	10	5	5	5
ø16	5/10/15/20/25/30	30	10	5	5	5

Note: Products with stroke other than standard stroke are not available.

Switch specifications

Item	2-wire reed	2-wire proximity			3-wire proximity			
	FOH/V	F2H/V	F2S	F2YH/V	F3H/V	F3S	F3PH/V (Made to order)	F3YH/V
Applications	Dedicated for programmable controller				For programmable controller, relay			
Output method	-				NPN output	NPN output	PNP output	NPN output
Power supply voltage	-	-	-	-	10 to 28 VDC	10 to 28 VDC	4.5 to 28 VDC	10 to 28 VDC
Load voltage	24 VDC	10 to 30 VDC		24 VDC ±10%	30 VDC or less			
Load current	5 to 20 mA (*3)				50 mA or less			
Current consumption	-	-	-	-	≤10 mA (ON) at 24 VDC	10 mA or less with 24 VDC		
Internal voltage drop	4V or less				0.5V or less		0.5 V or less at 30 mA	0.5V or less
Indicator	Yellow LED (Lit when ON)		LED (Lit when ON)	Red/green LED (Lit when ON)	Yellow LED (Lit when ON)	LED (Lit when ON)	Yellow LED (Lit when ON)	Red/green LED (Lit when ON)
Leakage current	1 mA or less				10 μA or less			
Lead wire length	Standard 1 m (oil resistant vinyl cabtyre cable 2-conductor 0.15 mm²)				Standard 1 m (oil resistant vinyl cabtyre cable 3-conductor 0.15 mm²)			
Shock resistance	294 m/s²	980 m/s²						
Insulation resistance	20 MΩ and over with 500 VDC megger							
Withstand voltage	No failure after 1 minute of 1,000 VAC application.							
Ambient temperature	-10 to +60°C							
Degree of protection	IEC Standard IP67, JIS C0920 (water-tight), oil resistance							
Weight g	1 m:10 3 m:29							

*1 : Refer to Ending Page 1 for detailed switch specifications and dimensions.
*2 : Switches other than the above models, such as switches with connectors, are also available. Refer to Ending Page 1.
*3 : The max. load current is 20 mA at 25°C. The current is lower than 20 mA if the operating ambient temperature around the switch is higher than 25°C. (5 to 10 mA at 60°C)
*4 : The F-switch uses a bend-resistant lead wire.

Theoretical thrust table

(Unit: N)

Bore size (mm)	Operating direction	Working pressure MPa										
		0.1	0.15	0.2	0.3	0.4	0.5	0.6	0.7	0.8	0.9	1.0
ø12	Push	11.3	17.0	22.6	33.9	45.2	56.5	67.9	79.2	90.5	1.02×10^2	1.13×10^2
	Pull	8.48	12.7	17.0	25.4	33.9	42.4	50.9	59.4	67.9	76.3	84.8
ø16	Push	20.1	30.2	40.2	60.3	80.4	1.01×10^2	1.21×10^2	1.41×10^2	1.61×10^2	1.81×10^2	2.01×10^2
	Pull	15.1	22.6	30.2	45.2	60.3	75.4	90.5	1.06×10^2	1.21×10^2	1.36×10^2	1.51×10^2

How to order

● With switch (built-in magnet for switch)

MSDG-LF - 12 - 10 - F2V - R - R

Model No.

Ⓐ Bore size

Ⓑ Stroke

Ⓒ Switch model No. *1

Ⓓ Switch quantity

Ⓔ Option *2

Code	Description
Ⓐ Bore size (mm)	
12	ø12
16	ø16
Ⓑ Stroke (mm)	
5	5
10	10
15	15
20	20
25	25
30	30

Ⓒ Switch model No.

Axial lead wire	Radial lead wire	Contact	Voltage AC	Voltage DC	Indicator	Lead wire
F0H*	**F0V***	Reed		●	1-color LED	2-wire
-	**F2S***	Proximity		●		
F2H*	**F2V***			●		
-	**F3S***			●		3-wire
F3H*	**F3V***			●		
F3PH*	**F3PV***			●	1-color LED (PNP output) (custom)	
F2YH*	**F2YV***			●	2-color LED	2-wire
F3YH*	**F3YV***			●		3-wire

* Lead wire length	
Blank	1 m (standard)
3	3 m (option)

Ⓓ Switch quantity	
R	1 on rod side
H	1 on head side
D	2

Ⓔ Option	
Blank	Front piping
R	Rear piping

⚠ Precautions for model No. selection

*1 : If with proximity switch and only when using through bolt, use the non-magnetic (stainless steel, etc.) mounting bolt.*2 : For rear piping, body side installation is possible.

[Example of model No.]

MSDG-LF-12-10-F0H-R-R

Double acting/guided/fine speed with switch

Ⓐ Bore size : ø12 mm
Ⓑ Stroke : 10 mm
Ⓒ Switch model No. : Reed switch F0H, lead wire 1 m
Ⓓ Switch quantity : 1 on rod side
Ⓔ Piping port position : Rear common port

How to order switch

SW - F0H

Switch model No.
(Item Ⓒ above)

Dimensions

The same as double acting/guided MSDG-L series.
Refer to pages 1458 and 1459.

SCP*3
CMK2
CMA2
SCM
SCG
SCA2
SCS2
CKV2
CAV2/COVP/N2
SSD2
SSG
SSD
CAT
MDC2
MVC
SMG
MSD/MSDG
FC*
STK
SRL3
SRG3
SRM3
SRT3
MRL2
MRG2
SM-25
ShkAbs
FJ
FK
Spd Contr
Ending

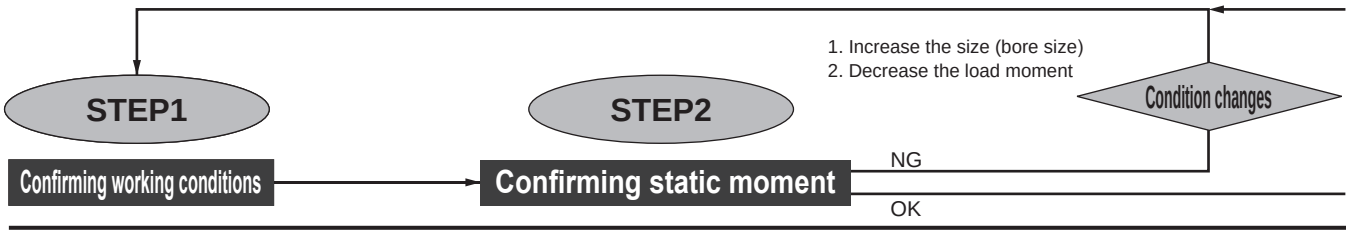

STEP1 Confirming working conditions

1. Bore size	:	D	(mm)	6. Load moment	:	M1, M2, M3 direction (N•m)
2. Stroke	:	St	(mm)	7. Load weight	:	m1, m2, m3(kg)
3. Working pressure	:	P	(MPa)	8. Amount of overhang	:	L1, L2, L3(m)
4. Travel time	:	t	(s)	9. Length from center of guide to table end	:	L(m)
5. Cylinder travel direction	:	Vertical, horizontal		10. Length from table end to load	:	A(m)

STEP2 Confirming static moment

Depending on the mounting direction (M1/M2/M3 direction), the tolerance value of the moment varies.
Calculate the value of moment to be applied by referring to the figure below.

● When there is only one load mounting direction
Check that the calculated value is within the tolerance value (Table 1).

● When there are more than one load mounting directions (complex moment)
Divide the value in each direction by the tolerance value of moment (Table 1) to obtain the moment ratio and check that the total value is 1.0 or less.

$$\frac{M1}{M1max} + \frac{M2}{M2max} + \frac{M3}{M3max} \leq 1.0$$

Table 1 Allowable moment in operation (Unit: N·m)

Bore size (mm)	M1	M2	M3
ø6	0.16	0.24	0.16
ø8	0.16	0.24	0.16
ø12	0.27	0.55	0.27
ø16	0.57	1.16	0.57

● Bending moment: M1

M1 (N·m)=10 x m1 (kg) x L1 (m)

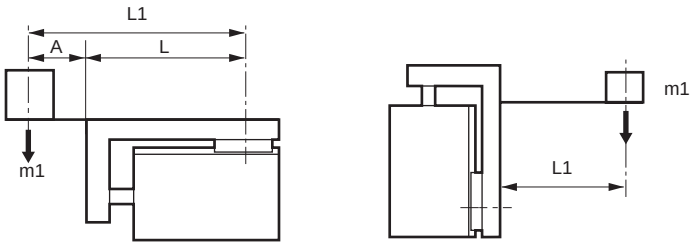

● Radial moment: M2

M2 (N·m)=10 x m2 (kg) x L2 (m)

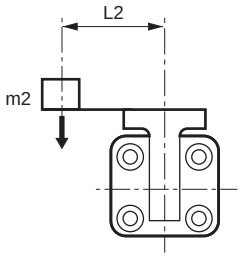

● Torsion moment: M3

M3 (N·m)=10 x m3 (kg) x L3 (m)

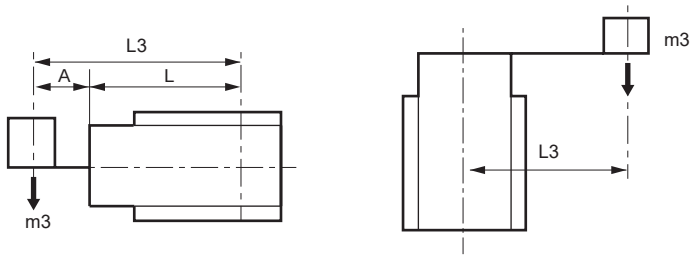

L value (Unit: m)

Bore size (mm)	Stroke					
	5	10	15	20	25	30
ø 6	0.027	0.032	0.037	0.042	0.047	0.052
ø 8	0.028	0.033	0.038	0.043	0.048	0.053
ø12	0.031	0.036	0.041	0.046	0.051	0.056
ø16	0.033	0.038	0.043	0.048	0.053	0.058

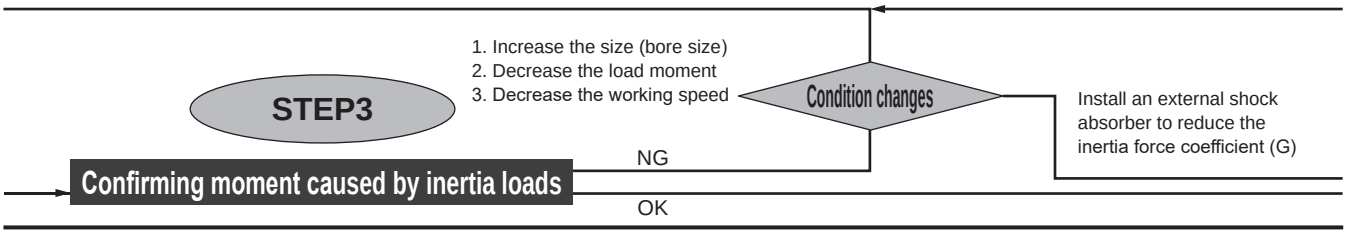

STEP3
Confirming moment caused by inertia loads

Depending on the mounting direction (M1/M2/M3 direction), moment caused by inertia load may be applied.
Calculate the value of moment caused by inertia load by referring to the figure below.

Moment caused by inertia load (M1'/M3') can be obtained from load weight (m1, m2, m3), overhang length (L1, L2, L3, L1', L3') and inertia force coefficient (G).

Inertia force coefficient (G) can be obtained from the relation between inertia force coefficient and stroke end speed (Fig. 1).

Check that the calculated value is within the tolerance value (Table 2).

Table 2 Allowable moment when inertia load is applied (Unit: N·m)

Bore size (mm)	M1'	M2'	M3'
ø6	0.33	-	0.33
ø8	0.33	-	0.33
ø12	0.49	-	0.49
ø16	1.11	-	1.11

* Inertia load is not applied in M2 direction.

● Bending moment: M1

M1' = 10 x m1 x (L1 + G x L1')

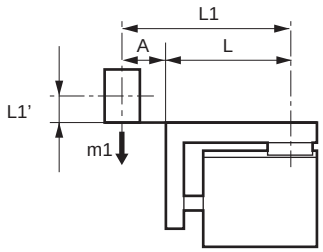

M1' = 10 x m1 x L1 x (1 + G)

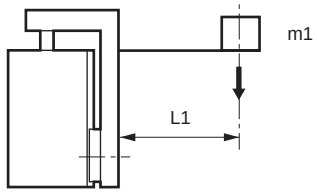

● Torsion moment: M3

M3' = 10 x m3 x (L3 + G x L3')

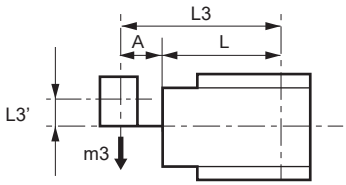

M3' = 10 x m3 x L3 x (1 + G)

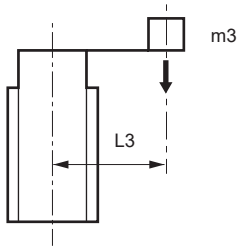

M3' = 10 x m2 x G x L2

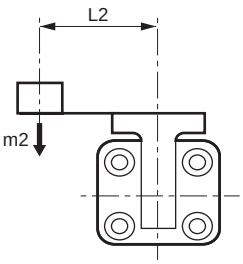

Fig. 1 Relation between inertia force coefficient and stroke end speed

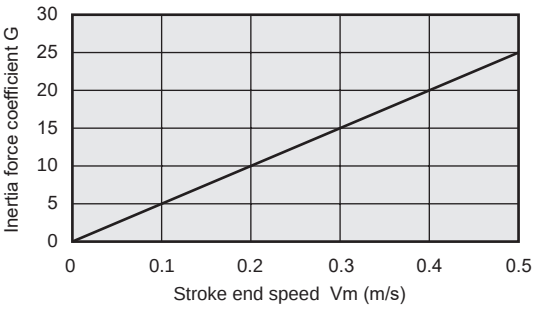

(Note) Calculate the stroke end speed Vm from STEP 4.

SCP*3
CMK2
CMA2
SCM
SCG
SCA2
SCS2
CKV2
CAV2/COVP/N2
SSD2
SSG
SSD
CAT
MDC2
MVC
SMG
MSD/MSDG
FC*
STK
SRL3
SRG3
SRM3
SRT3
MRL2
MRG2
SM-25
ShkAbs
FJ
FK
Spd Contr
Ending

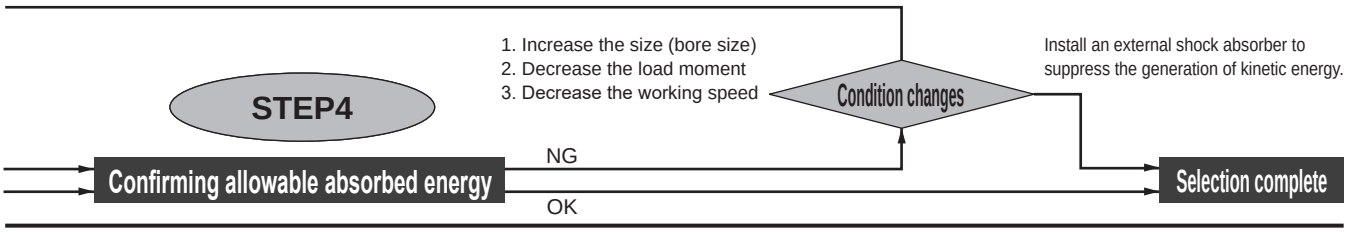

STEP4
Confirming allowable absorbed energy

First, obtain the kinetic energy of cylinder.

$$E = \frac{1}{2} \times m \times Vm^2$$

$$Vm = \frac{St \times 10^{-3}}{t} \times \left(1 + 1.5 \times \frac{\alpha}{100}\right)$$

$$\alpha = \frac{Fn}{F} \times 100$$

$$F = FO \times \frac{\mu}{100}$$

E	:	Kinetic energy	(J)
m	:	Load weight	(kg)
Vm	:	Stroke end speed	(m/s)
St	:	Stroke	(mm)
t	:	Travel time	(S)
α	:	Load factor	(%)
Fn	:	Thrust required to move the workpiece	(N)
F	:	Actual thrust	(N)
F0	:	Theoretical thrust force (refer to Table 4)	(N)
μ	:	Thrust efficiency	(%)

Table 3 Required thrust force (Fn)

Cylinder movement direction	Horizontal direction	Vertical
Thrust	Fn=0.2x10xm	Fn=1.2x10xm

Table 4 Theoretical thrust table (F0) (Unit: N)

Bore size	Operating direction	Working pressure MPa										
		0.1	0.15	0.2	0.3	0.4	0.5	0.6	0.7	0.8	0.9	1.0
ø6	Push			6	8	11	14	17	20	23	25	28
	Pull			3	5	6	8	9	11	13	14	16
ø8	Push		8	10	15	20	25	30	35	40	45	50
	Pull		5	6	9	12	15	18	21	24	28	31
ø12	Push	11	17	23	34	45	57	68	79	90	102	113
	Pull	8	13	17	25	34	42	51	59	68	76	85
ø16	Push	20	30	40	60	80	100	121	141	161	181	201
	Pull	15	23	30	45	60	75	90	106	121	136	151

Fig. 2 Relation between thrust force efficiency and pressure

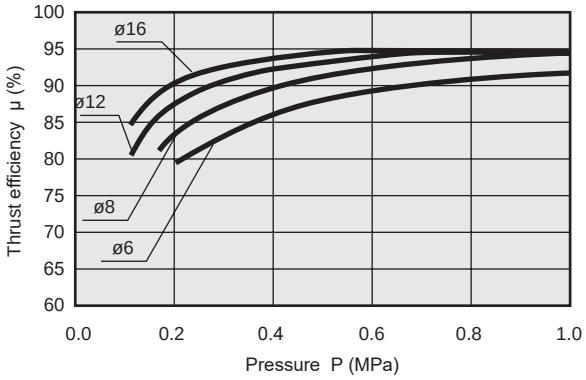

Check that the kinetic energy (E) is within the allowable absorbed energy value (E0).

$E \leq E0$

Table 5 Allowable absorbed energy value (E0)

Bore size (mm)	Allowable absorbed energy E0(J)
ø6	0.004
ø8	0.014
ø12	0.044
ø16	0.110

Table inclination (reference value)

● Inclination at point A when M1 moment is applied

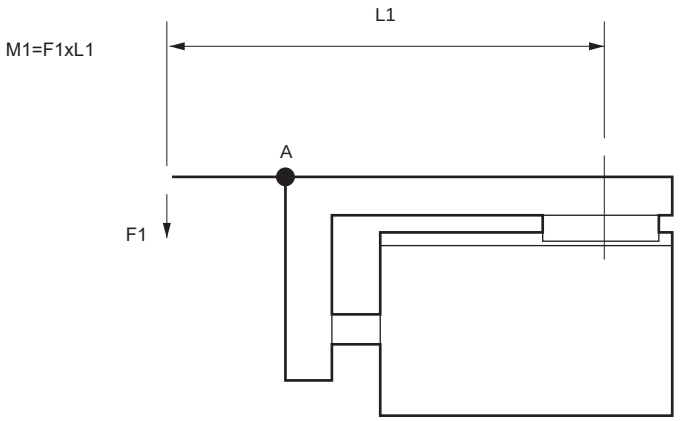

● MSDG-L-6

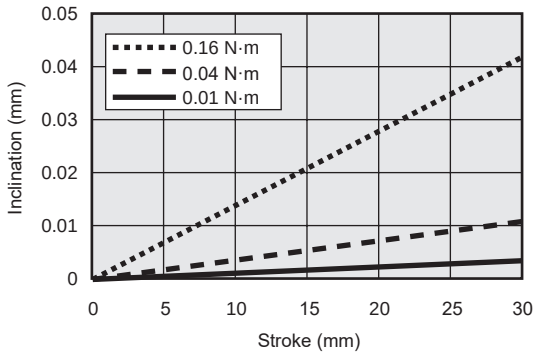

● MSDG-L-8

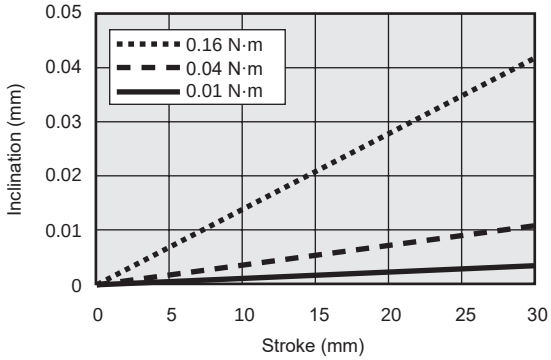

● MSDG-L-12

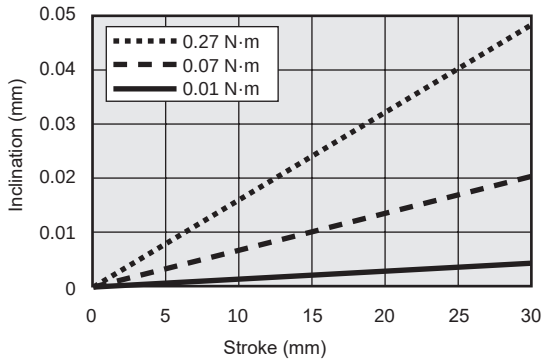

● MSDG-L-16

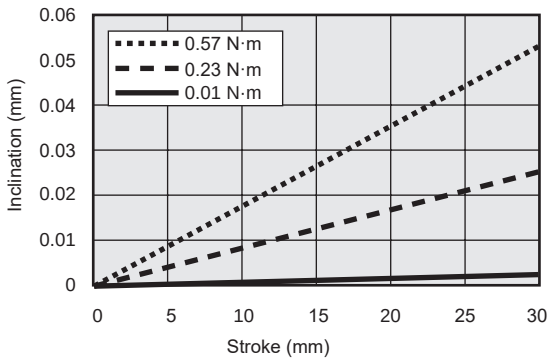

Table inclination (reference value)

● Inclination at point A when M2 moment is applied

M2=F2xL2

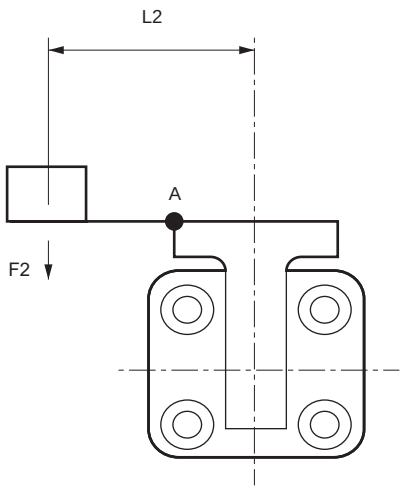

● MSDG-L-6

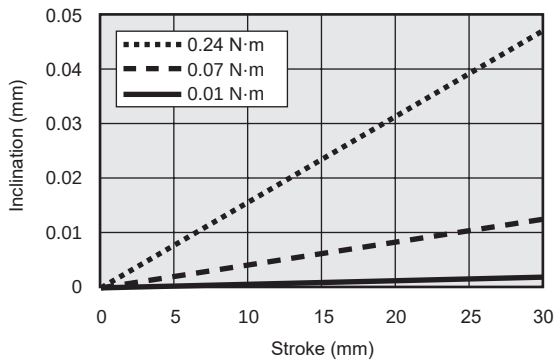

● MSDG-L-8

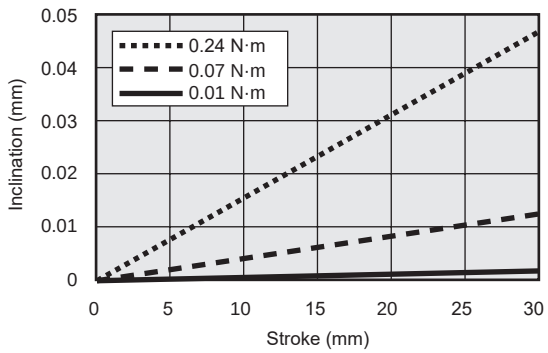

● MSDG-L-12

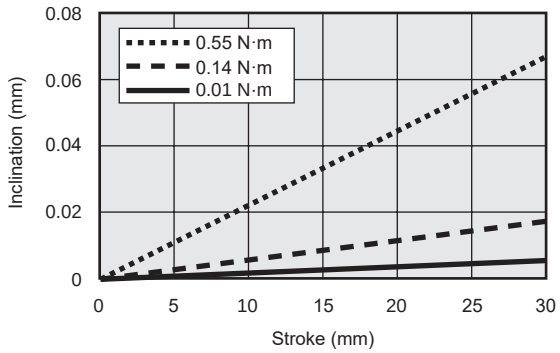

● MSDG-L-16

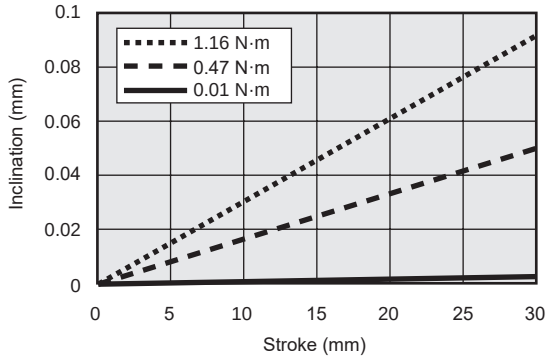

Table inclination (reference value)

● Inclination at point A when M3 moment is applied

M3=F3xL3

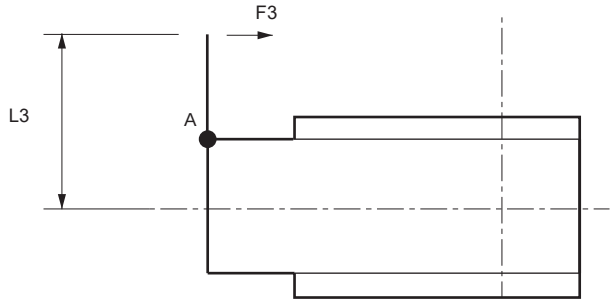

● MSDG-L-6

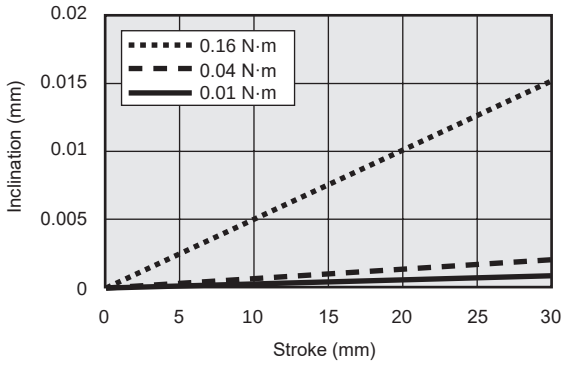

● MSDG-L-8

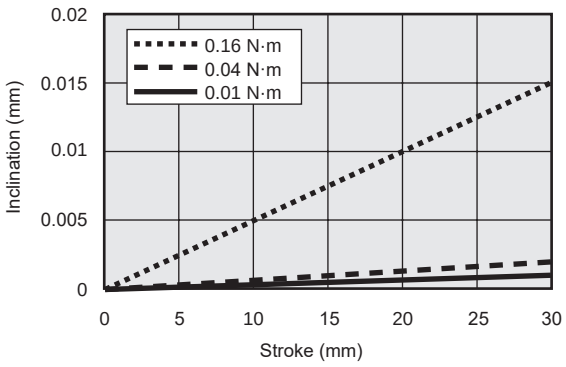

● MSDG-L-12

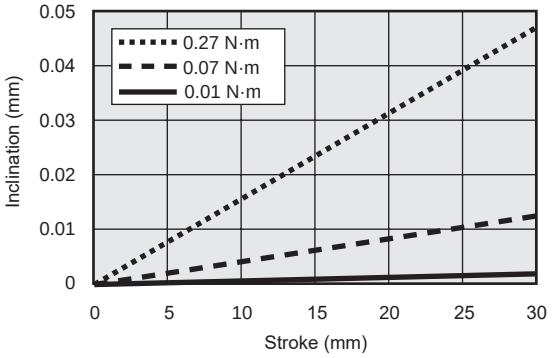

● MSDG-L-16

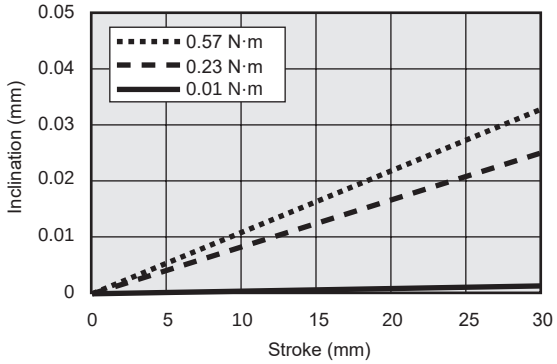

Safety Precautions

Be sure to read this section before use.

Refer to Intro Page 73 for general information of the cylinder, and to Intro Page 80 for general information of the cylinder switch.

Product-specific cautions: Small compact cylinder MSD/MSDG Series

Design/selection

1. Common

CAUTION

■ When selecting a cylinder, follow the “Selection guide” on page 1464.

■ Consult with CKD when using the cylinder as stopper.

■ When selecting the cylinder switch, refer to the “Switch selection table” on pages 1425, 1433, 1443 and 1455.

■ Observe tightening torque when mounting the switch.
If the tightening torque range is exceeded, the mounting bolt, bracket, switch, etc., could be damaged. In addition, when tightening the set screw with a torque less than the tightening torque range, displacement of switch mounting position could occur.
Tightening torque: 29.4 (N•m)

2. Single acting MSD-X/Y

CAUTION

■ Do not use the cylinder so as to apply load when the piston rod is pulled for the push type or when the piston rod is pushed for the pull type.
Because the cylinder built-in cylindrical spring has only returning force for the piston rod, it cannot be returned to the stroke end when a load is applied.

■ Take care when mounting so as not to block the breathing hole provided on the body.
Otherwise, malfunctions may result.

■ Do not leave in a pressurized state.
If it is left pressurized for long periods, the piston rod may not return due to spring load when the pressure is released.

3. Fine speed MSD-(K) F/MSDG-LF

CAUTION

■ Use without lubrication.
Applying lubrication may cause changes in characteristics.

■ Assemble the speed controller near the cylinder.
When installed far from the cylinder, the speed becomes unstable. Use the SC-M3/M5-F, SC3W, or SCD-M3/M5-F series speed controller.

■ In general, the speed is stabler at higher air pressure and lower load factor.
Use at a 50% or less load factor.

■ Stable speed control is achieved with a meter-out circuit.
When fine speed activation is performed with operating direction PUSH for the single rod cylinder, the popping out phenomenon occurs when operation starts if the load resistance is low. For countermeasures, use the ⓑ, ⓒ or ⓓ circuit. Note that circuit ⓓ is the most stable.

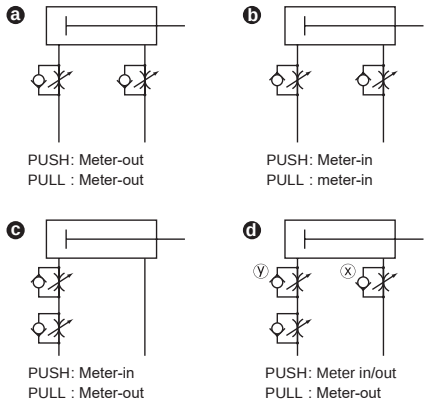

Speed adjustment method for PUSH operation of ⓓ circuit:
1. Set the speed with the speed controller x.
2. Restrict the speed with the speed controller y until there is no popping out.
3. Check the speed again.

(*1) When comparing ⓑ ⓒ ⓓ, the circuit ⓓ is the most stable.

(*2) For vertical mounting, combine the cylinder with a meter-out circuit, as it will fall under its own weight when a meter-in circuit is used.

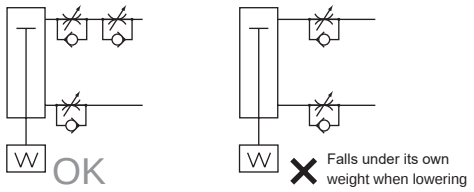

(*3) Use the circuit shown in the figure below for the serial connection of the speed controllers.

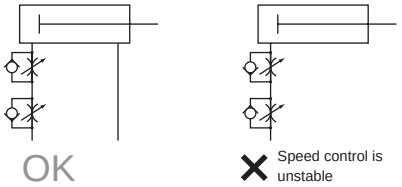

(Guidelines for pop-out generation)
Popping out occurs in the following cases.
· Thrust > Resistance

* Resistance: Thrust caused by residual pressure on the exhaust side (in the fine speed, suction pressure = residual pressure) + { When using horizontally: frictional force caused by load / When using vertically: load self-weight

■ Do not apply a lateral load to the cylinder.
With a lateral load, operation will become unstable.

■ Avoid using this product where vibration is present.
The product will be adversely affected by vibration and operation will become unstable.

Mounting, installation and adjustment

1. Common

⚠ CAUTION

■ Piping
Cautions for piping speed controller/fitting
As compatible fittings are limited, refer to the table below to select a fitting.

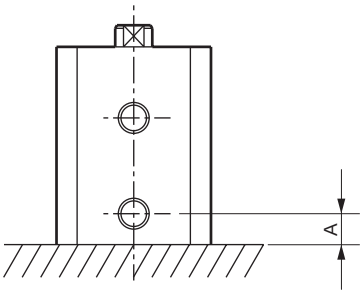

Fitting selection table

Code / Bore size (mm)	Port size	Port position dimension A	Available speed controller/fitting	Fitting O.D.
ø6 ø8	M3	4	SC3W-M3-3 SC3W-M3-4 SC3U-M3-3 SC3U-M3-4	ø8 or less
			GWS3-M3-S GWS4-M4-S	
			FTS4-M3	
ø12 ø16	M5	5	SC3W-M5-3 SC3W-M5-4 SC3W-M5-6 SC3U-M5-3 SC3U-M5-4 SC3U-M5-6	ø10 or less
			GWS4-M5-S GWS6-M5-S	
			FTS4-M5 FTS6-M5	

■ Installation
Do not damage the surface flatness by denting or scratching the body (tube) mounting surface or the table surface. Make sure that the flatness of the mating surface for table mounting is 0.05 mm or less.

2. Fine speed MSD-(K) F/MSDG-LF

⚠ CAUTION

■ Perform adjustment such as centering so that a lateral load is not applied to the cylinder.
In addition, install and adjust the sliding guide so that it is not twisted.
When the load or the resistance fluctuates, operation becomes unstable. With a large difference between static friction and kinematic friction of the guide, operation becomes unstable.

FC*

Flat compact cylinder

ø25/ø32/ø40/ø50/ø63

Space saving structure

Overview

This cylinder is a rectangular space saving cylinder that reduces cylinder axial dimensions by 50% and enables easy installation into a small space. The bore section is oval and a rotation-stop function is provided.

Features

Space saving

Size in width direction is reduced by 50% (compared to our compact cylinders). This cylinder has a space saving structure that functions in a small space.

Easy to install even in a tight space

Conforming to the installation space, tubes can be extracted together in one direction without being bent. Therefore, it can be easily installed even in a tight space.

The 2-color LED proximity switch can be mounted

The 2-color LED proximity switch, which instantly displays the optimum installation position with green LED, can be mounted.

Can be mounted from any surface

This cylinder is provided with mounting holes on the cover and is designed to be mounted from any surface, conforming to the space or applications.

Rotation-stop is not required

Structurally, this cylinder has a rotation-stop function. Therefore, there is no need to provide a rotation-stop mechanism separately. This cylinder also has a higher tolerance torque.

Simple design

This cylinder has a simple shape and matches any equipment.

CONTENTS

Series variation	1474
Product introduction	1474
Variation and option combination selection table	1476
Applications	1478
● Single acting/push (FCS)	1480
● Single acting/pull (FCH)	1480
● Double acting/single rod (FCD)	1488
● Double acting/double rod (FCD-D)	1494
● Double acting/cushioned (FCD-K)	1500
FC* Series common option dimensions	1506
⚠ Safety precautions	1507

Series variation

Flat compact cylinder FC*Series

Variation	Model No. JIS symbol	Bore size (mm)	Standard stroke (mm) 5	10	15	20	25	30	40	50
Single acting/ push with switch	FCS FCS-L 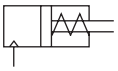	ø25 equivalent/ ø32 equivalent	●	●						
		ø40 equivalent/ø50 equivalent/ø63 equivalent		●		●				
Single acting/pull with switch	FCH FCH-L	ø25 equivalent/ ø32 equivalent	●	●						
		ø40 equivalent/ø50 equivalent/ø63 equivalent		●		●				
Double acting/ single rod with switch	FCD FCD-L 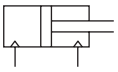	ø25 equivalent/ ø32 equivalent/ ø40 equivalent/ ø50 equivalent/ ø63 equivalent	●	●	●	●	●	●	●	●
Double acting/ double rod with switch	FCD-D FCD-DL 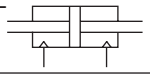	ø25 equivalent/ ø32 equivalent/ ø40 equivalent/ ø50 equivalent/ ø63 equivalent	●	●	●	●	●	●	●	●
Double acting/ cushioned/with switch	FCD-K FCD-KL 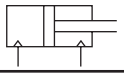	ø25 equivalent/ ø32 equivalent/ ø40 equivalent/ ø50 equivalent/ ø63 equivalent	●	●	●	●	●	●	●	●

Product introduction

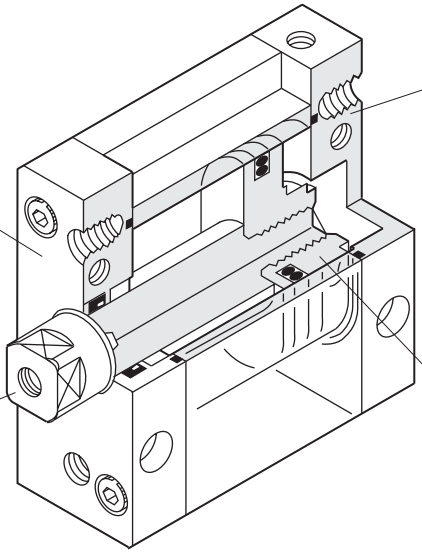

● Rod cover

● Head cover
Mounting holes are provided so that this cylinder can be mounted from any surface, conforming to the space.

● Piston rod end
Female thread or male thread can be selected.
(Note that the 2 WAF is at an unspecified position.)

● Long circular piston is adopted
Cylinder width is reduced by 50% and rotation-stop is not required

●: Standard, ◎: Option, ▒: Not available

	Min. stroke (mm)	Custom stroke (per mm)	Max. stroke (mm)	Option				Switch	Page
				Piston rod material change	Rod end male thread	With spigot	Copper and PTFE free		
				M	N	R	P6		
	1	1	10	◎	◎	◎	◎	◎	1480
			20	◎	◎	◎	◎	◎	
	1	1	10	◎	◎	◎	◎	◎	1480
			20	◎	◎	◎	◎	◎	
	1	1	50	◎	◎	◎	◎	◎	1488
	1	1	50	◎	◎	◎	◎	◎	1494
	1	1	150	◎	◎	◎	◎	◎	1500

SCP*3
CMK2
CMA2
SCM
SCG
SCA2
SCS2
CKV2
CAV2/COVP/N2
SSD2
SSG
SSD
CAT
MDC2
MVC
SMG
MSD/MSDG
FC*
STK
SRL3
SRG3
SRM3
SRT3
MRL2
MRG2
SM-25
ShkAbs
FJ
FK
Spd Contr
Ending

Variation and option combination selection table

◎: Option
○: Available (made-to-order product)
△: Available depending on conditions (Contact CKD.)
x: Not available

Category		Category	Variation								Port thread			Option					
			Double acting basic	Double acting with cushion	Single acting push	Single acting pull	Double acting double rod	Double acting rod cushioned	With cylinder switch		NPT *1	G *1		Piston rod material stainless steel	Piston rod end male thread	Specify piston rod end form	Copper and PTFE free	With spigot	
		Code	None	K	S	H	D	DK	L		N	G		M	N	N**	P6	R	
Variation	Double acting basic	Blank							◎		○	○		◎	◎	○	◎	◎	
	Double acting with cushion	FCD-K			x	x	○	x	◎		○	○		◎	◎	○	◎	◎	
	Single acting push	FCS				x	x	x	◎		○	○		◎	◎	○	◎	◎	
	Single acting pull	FCH					x	x	◎		○	○		◎	◎	○	◎	◎	
	Double acting double rod	FCD-D							◎		○	○		◎	◎	○	◎	◎	
	Double acting rod cushioned	FCD-DK							○		○	○		◎	◎	○	◎	◎	
	With cylinder switch	L									○	○		◎	◎	○	◎	◎	
Port thread	NPT *1	N										x		○	○	○	○	○	
	G *1	G												○	○	○	○	○	
Option	Piston rod material stainless steel	M													◎	○	○	○	
	Piston rod end male thread	N														○	◎	◎	
	Specify piston rod end form	N**															○	○	
	Copper and PTFE free	P6																○	
	With spigot	R																	
Accessory	Cylinder switch	Listed separately	x	x	x	x	x	x	◎		○	○		◎	◎	○	◎	◎	

*1: Available only for ø40 and over

[Example of model No.]

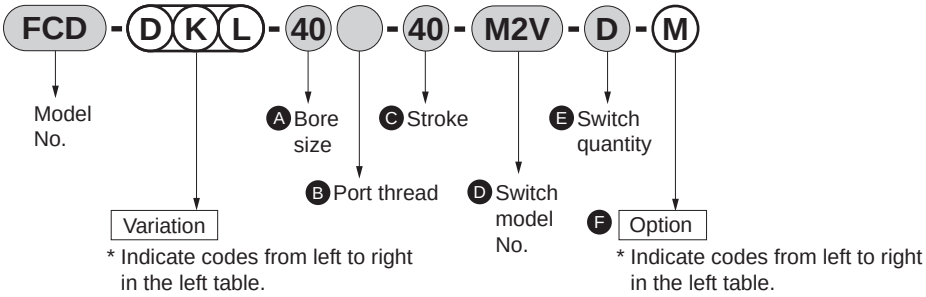

Model No: Flat cylinder
● Variation: Double rod/cushioned/with switch
Ⓐ Bore size : ø40 mm
Ⓑ Port thread : Rc thread
Ⓒ Stroke : 40 mm
Ⓓ Switch model No. : Proximity M2V switch, lead wire 1 m
Ⓔ Switch quantity : 2
Ⓕ Option : Piston rod material (stainless steel)

SCP*3
CMK2
CMA2
SCM
SCG
SCA2
SCS2
CKV2
CAV2/COVP/N2
SSD2
SSG
SSD
CAT
MDC2
MVC
SMG
MSD/MSDG
FC*
STK
SRL3
SRG3
SRM3
SRT3
MRL2
MRG2
SM-25
ShkAbs
FJ
FK
Spd Contr
Ending

Applications

Conventionally impossible automatization of various applications has been achieved

● Installation in a small space

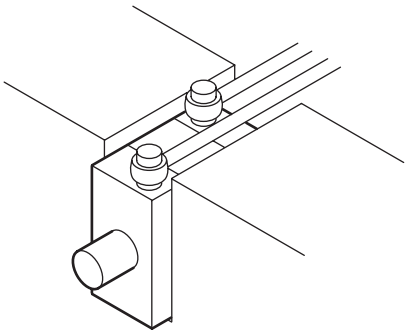

● Positioning when there is an obstacle (rotation-stop function)

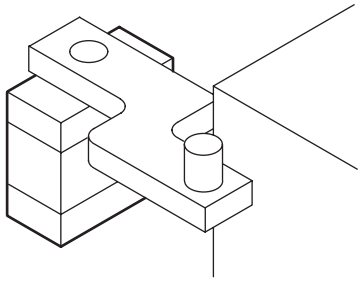

● Clamp

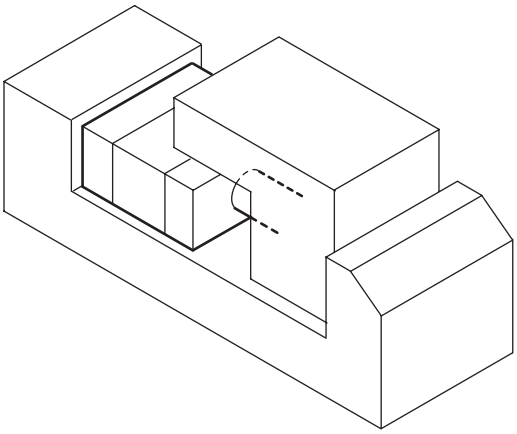

● Can be used in parallel

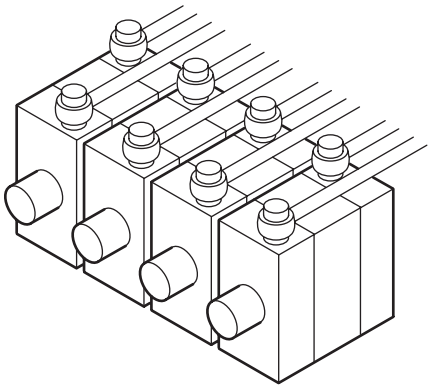

MEMO

Flat compact cylinder single acting/push/single acting/pull

FCS Series/FCH Series

● Bore size: ø25/ø32/ø40/ø50/ø63

JIS symbol 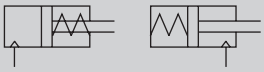

RoHS CAD

Specifications

Item	FCS FCS-L					FCH FCH-L				
Bore size mm	ø25 or equiv.	ø32 or equiv.	ø40 or equiv.	ø50 or equiv.	ø63 or equiv.	ø25 or equiv.	ø32 or equiv.	ø40 or equiv.	ø50 or equiv.	ø63 or equiv.
Actuation	Single acting push					Single acting pull				
Working fluid	Compressed air									
Max. working pressure MPa	0.7 (≈100 psi, 7 bar)									
Min. working pressure MPa	0.12 (≈17 psi, 1.2 bar)									
Proof pressure MPa	1.05 (≈150 psi, 10.5 bar)									
Ambient temperature °C	-10 (14°F) to 60 (140°F) (no freezing)									
Port size	M5		Rc1/8		Rc1/4	M5		Rc1/8		Rc1/4
Stroke tolerance mm	$^{+0.5}_{0}$ (to 50)									
Working piston speed mm/s	50 to 500									
Cushion	None									
Lubrication	Not required (turbine oil type 1 ISO VG32 if necessary for lubrication)									
Allowable absorbed energy J	0.015	0.02	0.026	0.04	0.05	0.015	0.02	0.026	0.04	0.05

Note: Do not leave the single acting cylinder pressurized for a long time. If it is left pressurized for long periods, the piston rod may not return due to spring load when the pressure is released.

Rotation-stop precision/Allowable torque

Item		ø25 or equiv.	ø32 or equiv.	ø40 or equiv.	ø50 or equiv.	ø63 or equiv.
Non-rotating accuracy	*2	±1°	±0.8°	±0.5°	±0.5°	±0.5°
Allowable torque	N·m	1	1.6	2.5	3.9	5.9

*1: Avoid applying rotation torque with impact, or with violent changes in torque load direction.*2: "Non-rotating

Stroke

Model No.	Bore size (mm)	Standard stroke (mm)	Max. stroke (mm)	Min. stroke (mm)
FCS	ø25, ø32 or equiv.	5, 10	10	1
FCH	ø40, ø50, ø63 or equiv.	10, 20	20	

*1: The custom stroke is available in 1mm increments.
*2: The min. stroke varies depending on switch mounting method. Refer to the following table.

Min. stroke with switch

1		2
Rod side installation	Head side installation	Different surface mounting
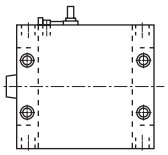	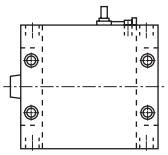	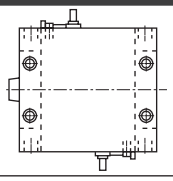
10 mm		15 mm

FCS/FCH spring load

(Unit: N)

Bore size (mm)	Stroke (mm)	When stroke = 0	At full stroke operation
ø25 or equiv.	5	27.4	35.3
	10	19.6	
ø32 or equiv.	5	36	47.5
	10	24.5	
ø40 or equiv.	10	38.5	47.6
	20	29.4	
ø50 or equiv.	10	56.5	74.9
	20	38.2	
ø63 or equiv.	10	92.2	119.8
	20	61.7	

Switch specifications

● Proximity switch

Item	2-wire proximity		3-wire proximity		
	M2V	M2WV (2-color LED)	M3V	M3PV (Made to order)	M3WV (2-color LED)
Applications	Dedicated for programmable controller		For programmable controller, relay, IC circuit, compact solenoid valve		
Output method	-	-	NPN output	PNP output	NPN output
Power supply voltage	-		4.5 to 28 VDC		10 to 28 VDC
Load voltage	10 to 30 VDC		30 VDC or less		
Load current	5 to 30 mA		100 mA or less	100 mA or less	100 mA or less
Indicator	LED (Lit when ON)	Red/green LED (Lit when ON)	LED (Lit when ON)	Yellow LED (Lit when ON)	Red/green LED (Lit when ON)
Leakage current	1 mA or less		10 μA or less	0.05 mA or less	10 μA or less
Weight g	1 m:22 3 m:57 5 m:93				

● Reed switch

Item	2-wire reed			
	M0V		M5V	
Applications	Programmable controller, relay		For programmable controller, relay, IC circuit (without indicator lamp), serial connection	
Power supply voltage	-		-	
Load voltage	12/24 VDC	110 VAC	5/12/24 VDC	110 VAC or less
Load current	5 to 50 mA	7 to 20 mA	50 mA or less	20 mA or less
Indicator	LED (Lit when ON)		No indicator lamp	
Leakage current	0 mA			
Weight g	1 m:22 3 m:57 5 m:93			

*1 : Refer to Ending Page 1 for other switch specifications.
*2 : Dimensions depend on switch model No. Refer to Ending Page 13 for details.

Cylinder weight

(Unit: g)

Item	Product weight when stroke (S) = 0 mm				Switch weight	Mounting bracket weight	Additional weight per S = 10 mm
	FCS		FCH				
Bore size (mm)	No switch	With switch	No switch	With switch			
ø25 or equiv.	155	217	135	197	Refer to the weight in the switch specifications.	2	26
ø32 or equiv.	220	310	190	280			37
ø40 or equiv.	345	468	310	433			46
ø50 or equiv.	545	733	485	673			71
ø63 or equiv.	1090	1226	965	976			90

(Example) Product weight of FCS-32-10
- ● Product weight when S = 0 mm.....220 g
- ● Additional weight when S = 10 mm .....37 g x $\frac{10}{10}$ = 37 g
- ● Product weight.....220 g + 37 g = 257 g

Theoretical thrust table

● FCS

(Unit: N)

Bore size (mm)	Working pressure MPa					
	0.2	0.3	0.4	0.5	0.6	0.7
ø25	63.2	$1.12x10^2$	$1.62x10^2$	$2.11x10^2$	$2.60x10^2$	$3.09x10^2$
ø32	$1.08x10^2$	$1.85x10^2$	$2.63x10^2$	$3.41x10^2$	$4.18x10^2$	$4.96x10^2$
ø40	$2.11x10^2$	$3.40x10^2$	$4.69x10^2$	$5.98x10^2$	$7.27x10^2$	$8.56x10^2$
ø50	$3.11x10^2$	$5.05x10^2$	$6.98x10^2$	$8.91x10^2$	$1.08x10^3$	$1.28x10^3$
ø63	$5.16x10^2$	$8.34x10^2$	$1.15x10^3$	$1.47x10^3$	$1.79x10^3$	$2.10x10^3$

● FCH

(Unit: N)

Bore size (mm)	Working pressure MPa					
	0.2	0.3	0.4	0.5	0.6	0.7
ø25	40.6	78.5	$1.16x10^2$	$1.54x10^2$	$1.92x10^2$	$2.30x10^2$
ø32	67.5	$1.25x10^2$	$1.83x10^2$	$2.40x10^2$	$2.98x10^2$	$3.55x10^2$
ø40	$1.70x10^2$	$2.79x10^2$	$3.88x10^2$	$4.97x10^2$	$6.06x10^2$	$7.15x10^2$
ø50	$2.49x10^2$	$4.10x10^2$	$5.72x10^2$	$7.34x10^2$	$8.96x10^2$	$1.06x10^3$
ø63	$4.53x10^2$	$7.39x10^2$	$1.03x10^3$	$1.31x10^3$	$1.60x10^3$	$1.88x10^3$

SCP*3
CMK2
CMA2
SCM
SCG
SCA2
SCS2
CKV2
CAV2/COVP/N2
SSD2
SSG
SSD
CAT
MDC2
MVC
SMG
MSD/MSDG
FC*
STK
SRL3
SRG3
SRM3
SRT3
MRL2
MRG2
SM-25
ShkAbs
FJ
FK
Spd Contr
Ending

How to order

No switch (without magnet for switch)

FCS - 25 ◯ - 10 ——— N

With switch (built-in magnet for switch)

FCS-L - 25 ◯ - 10 - M2V - R - N

Ⓐ Model No.
Ⓑ Bore size
Ⓒ Port thread
Ⓓ Stroke
Ⓔ Switch model No.
* indicates the lead wire length.
Ⓕ Switch quantity
Ⓖ Option *2

Code	Description
Ⓐ Model No.	
FCS	Single acting/push
FCS-L	Single acting/push/with switch
FCH	Single acting/pull
FCH-L	Single acting/pull/with switch

Ⓑ Bore size (mm)	
25	ø25
32	ø32
40	ø40
50	ø50
63	ø63

Ⓒ Port thread	
Blank	Rc thread
NN	NPT thread (ø40 or more) (made-to-order product)
GN	G thread (ø40 or more) (made-to-order product)

Ⓓ Stroke (mm)

Bore size	Stroke *1	Custom stroke
ø25,ø32	**1 to 10**	**In 1 mm increments**
ø40 to ø63	**1 to 20**	

Ⓔ Switch model No.

Radial lead wire	Contact	Voltage AC	Voltage DC	Indicator	Lead wire
M2V*	Proximity		●	1-color LED	2-wire
M2WV*			●	2-color LED	
M3V*			●	1-color LED	3-wire
M3WV*			●	2-color LED	
M3PV*			●	1-color LED (made to order)	3-wire
M0V*	Reed	●	●	1-color LED	2-wire
M5V*		●	●	No indicator lamp	

*** Lead wire length**	
Blank	1 m (standard)
3	3 m (option)
5	5 m (option)

Ⓕ Switch quantity	
R	1 on rod side
H	1 on head side
D	2

Ⓖ Option	
Blank	Rod end female thread
M	Piston rod material (stainless steel)
N	Rod end male thread
R	With spigot
P6	Copper and PTFE free (copper-based/Teflon-based material is not used)

⚠ Precautions for model No. selection

*1 : Refer to page 1480 for the min. stroke with switch.
*2 : Dimensions of copper and PTFE free "P6" are the same as those of the standard.

[Example of model No.]

FCS-L-25-10-M2V-R-M

Model: Flat compact cylinder

Ⓐ Model No. : Single acting/push
Ⓑ Bore size : ø25 mm
Ⓒ Port thread : Rc thread
Ⓓ Stroke : 10 mm
Ⓔ Switch model No. : Proximity switch M2V
Ⓕ Switch quantity : 1 on rod side
Ⓖ Option : Piston rod material (stainless steel)

How to order switch

● Switch body + mounting bracket set

FCS - M2V

Switch model No.
(Item Ⓔ on page 1482)

● Switch body only

SW - M2V

Switch model No.
(Item Ⓔ on page 1482)

● Mounting bracket set

FCS - M

Mounting bracket

SCP*3
CMK2
CMA2
SCM
SCG
SCA2
SCS2
CKV2
CAV2/COVP/N2
SSD2
SSG
SSD
CAT
MDC2
MVC
SMG
MSD/MSDG
FC*
STK
SRL3
SRG3
SRM3
SRT3
MRL2
MRG2
SM-25
ShkAbs
FJ
FK
Spd Contr
Ending

Internal structure and parts list

● FCS-L (single acting/push, with switch)

* ø25 to ø40 or equiv.

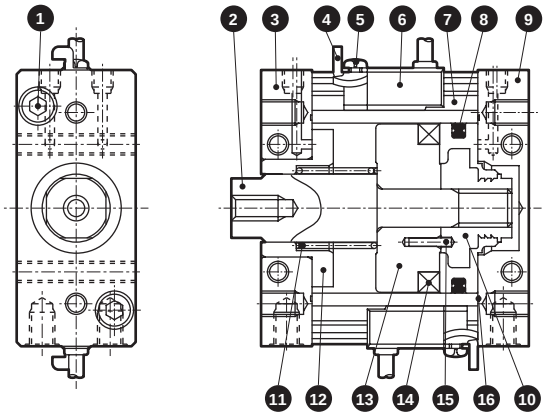

* ø50 to ø63 or equiv.

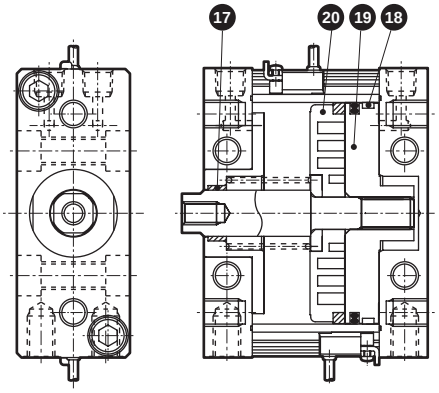

● FCS (Single acting/push)

* ø25 to ø40 or equiv.

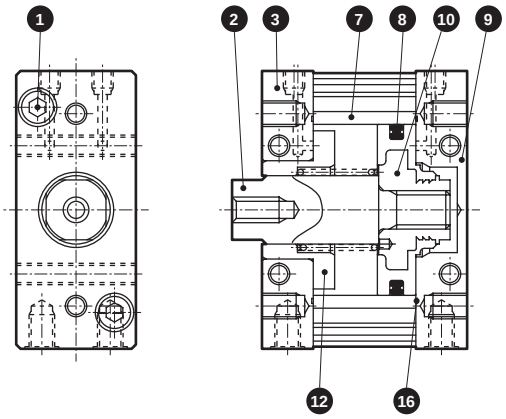

* ø50 to ø63 or equiv.

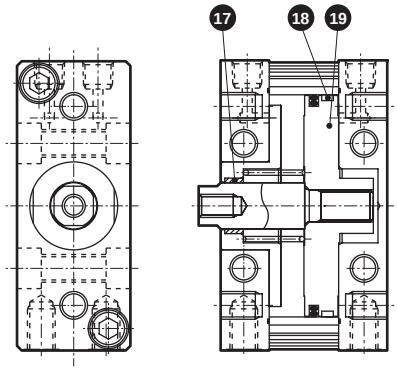

No.	Part name	Material	Remarks	No.	Part name	Material	Remarks
1	Hexagon socket head cap screw	Steel	Zinc chromate	11	Spring	Steel	Electrodeposition
2	Piston rod	Steel	Industrial chrome plating	12	Bush spacer	Aluminum alloy	Alumite
3	Rod cover	Aluminum alloy	Black alumite	13	Spacer	Aluminum alloy	
4	Switch mounting bracket	Stainless steel		14	Magnet		
5	Cross-recessed pan head machine screw	Steel	Zinc chromate	15	Spring pin	Steel	
6	Switch			16	Cover gasket	Nitrile rubber	
7	Tube	Aluminum alloy	Hard alumite	17	Bush	Aluminum alloy	Alumite
8	Piston packing	Nitrile rubber		18	Wear ring	Acetal resin	ø63 only
9	Head cover	Aluminum alloy	Black alumite	19	Piston	Aluminum alloy	Chromate
10	Piston	Aluminum alloy + Acetal resin		20	Spacer	Aluminum alloy	ø50
						Polyamide resin	ø63

Repair parts list (common to types with/without switch)

Bore size (mm)	Kit No.	Repair parts No.
ø25 or equiv.	FCS-25K	8 16
ø32 or equiv.	FCS-32K	
ø40 or equiv.	FCS-40K	
ø50 or equiv.	FCS-50K	
ø63 or equiv.	FCS-63K	8 16 18

Internal structure and parts list

● FCH-L (single acting/pull, with switch)

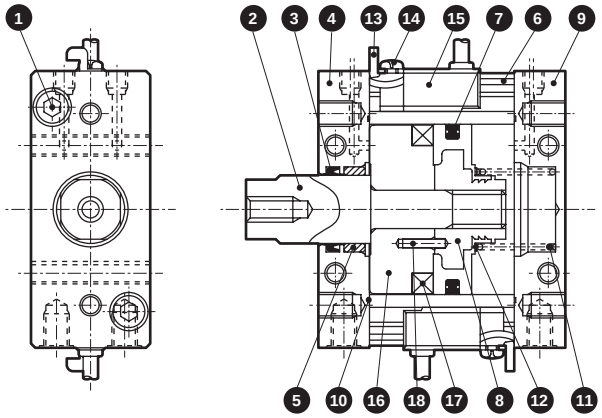

● FCH

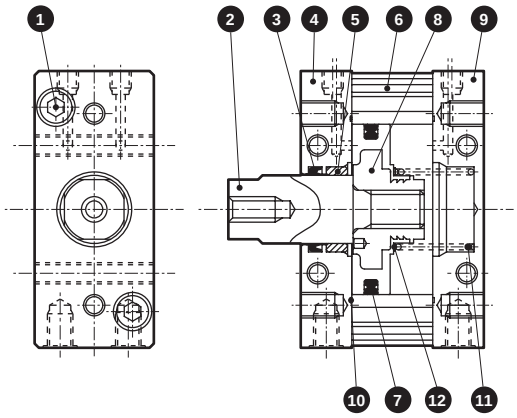

ø63

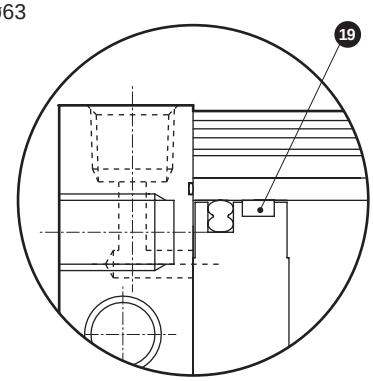

No.	Part name	Material	Remarks	No.	Part name	Material	Remarks
1	Hexagon socket head cap screw	Steel	Zinc chromate	10	Cover gasket	Nitrile rubber	
2	Piston rod	Steel	Industrial chrome plating	11	Spring	Steel	Electrodeposition
3	Rod packing	Nitrile rubber		12	Spring holder	Stainless steel	
4	Rod cover	Aluminum alloy	Black alumite	13	Switch mounting bracket	Stainless steel	
5	Bush	Special bearing material	*1	14	Cross-recessed pan head machine screw	Steel	Zinc chromate
6	Tube	Aluminum alloy	Hard alumite	15	Switch		
7	Piston packing	Nitrile rubber		16	Spacer	Aluminum alloy	ø25 to ø50
8	Piston	Aluminum alloy + Acetal resin	ø25 to ø50			Polyamide resin	ø63
				17	Magnet		
		Aluminum alloy	ø63: Chromate	18	Spring pin	Steel	
9	Head cover	Aluminum alloy	Black alumite	19	Wear ring	Acetal resin	

*1: Special aluminum for copper and PTFE free.

Repair parts list (common to types with/without switch)

Bore size (mm)	Kit No.	Repair parts No.
ø25 or equiv.	FCH-25K	3 7 10
ø32 or equiv.	FCH-32K	
ø40 or equiv.	FCH-40K	
ø50 or equiv.	FCH-50K	
ø63 or equiv.	FCH-63K	3 7 10 19

SCP*3
CMK2
CMA2
SCM
SCG
SCA2
SCS2
CKV2
CAV2/COVP/N2
SSD2
SSG
SSD
CAT
MDC2
MVC
SMG
MSD/MSDG
FC*
STK
SRL3
SRG3
SRM3
SRT3
MRL2
MRG2
SM-25
ShkAbs
FJ
FK
Spd Contr
Ending

Dimensions

● FCS-L (single acting/push, with switch)

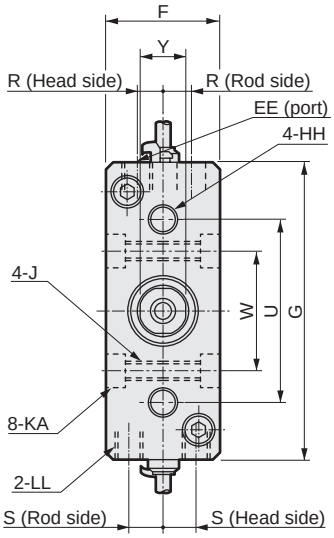

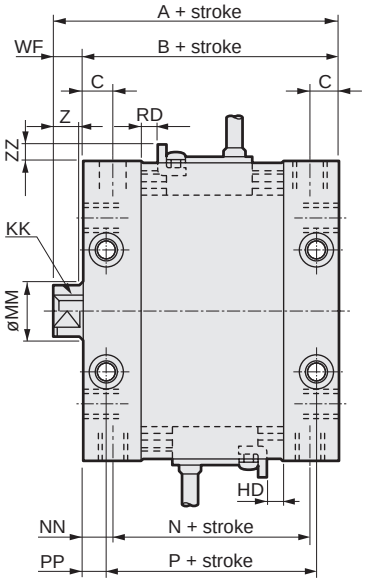

● Dimensions of rod end male thread (Option code N)

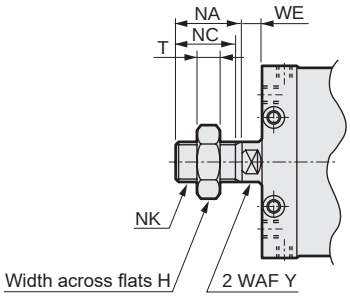

*1: This figure shows FCS-L-40.
*2: Position for Y section 2 WAF is unspecified.

● FCS (without switch)

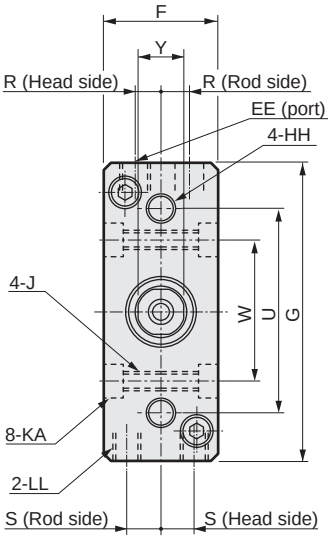

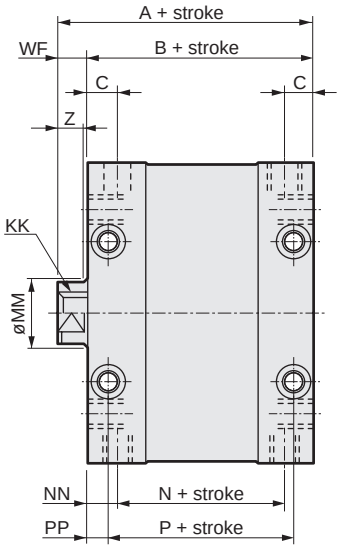

*1: This figure shows FCS-40.
*2: Position for Y section 2 WAF is unspecified.

Code / Bore size (mm)	Dimensions without switch				Dimensions with switch				Common dimensions						
	A	B	N	P	A	B	N	P	C	EE	F	G	HH	J	KA
ø25 or equiv.	42	37	25	29	57	52	40	44	7.5	M5 depth 4	25	55	M5 depth 7	M5 (through)	-
ø32 or equiv.	45	38	26	30	60	53	41	45	7.5	M5 depth 4	28	65	M6 depth 8	M5 (through)	-
ø40 or equiv.	54	46	30	34	69	61	45	49	8.5	Rc1/8	32	83	M8 depth 10	M6 (through)	9.5 spot face depth 5.4
ø50 or equiv.	60.5	51	34	32	75.5	66	49	47	10.5	Rc1/8	39	101	M10 depth 12	M8 (through)	11 spot face depth 6.5
ø63 or equiv.	71.5	62	42	42	86.5	77	57	57	11.5	Rc1/4	49	125	M12 depth 15	M12 (through)	17.5 spot face depth 10.5

Code / Bore size (mm)	Common dimensions with switch														
	KK	LL	MM	NN	PP	R	S	U	W	WF	ZZ	RD	HD	Y	Z
ø25 or equiv.	M5 depth 9	M5 depth 7	12	6	4	4.7	7	38	24	5	5.5 or less	3.5	0	10	5
ø32 or equiv.	M6 depth 11	M6 depth 8	16	6	4	6.2	8	45	30	7	5.5 or less	4.5	0	14	7
ø40 or equiv.	M8 depth 13	M8 depth 10	16	8	6	7.5	9	52	34	8	5.5 or less	4.5	0	14	7
ø50 or equiv.	M8 depth 13	M10 depth 12	20	8.5	9.5	9	10	62	40	9.5	5.5 or less	4.5	0.5	17	8
ø63 or equiv.	M10 depth 15	M12 depth 18	20	10	10	10.5	14	86	54	9.5	5.5 or less	4.5	4.5	17	8

● Rod end male thread dimensions

Code / Bore size (mm)	H	NA	NC	NK	T	WE
ø25 or equiv.	17	22	20	M10x1.25	6	5
ø32 or equiv.	22	22	20	M14x1.5	8	7
ø40 or equiv.	22	22	20	M14x1.5	8	7
ø50 or equiv.	27	28	26	M18x1.5	11	8
ø63 or equiv.	27	28	26	M18x1.5	11	8

Dimensions

● FCH-L (single acting/pull, with switch)

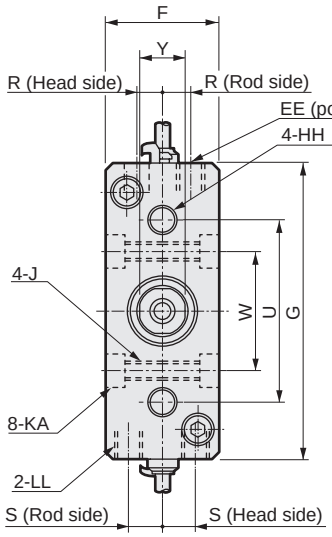

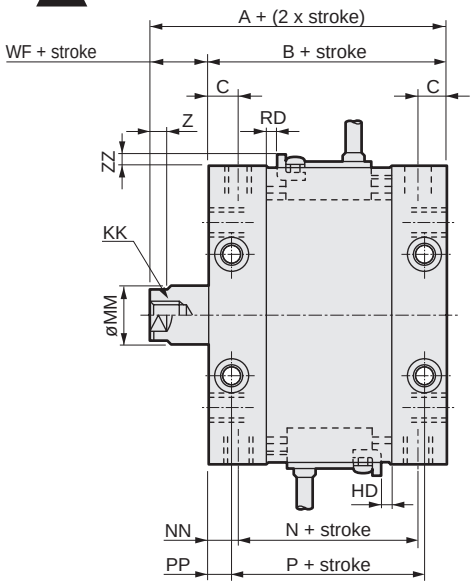

● Dimensions of rod end male thread (Option code: N)

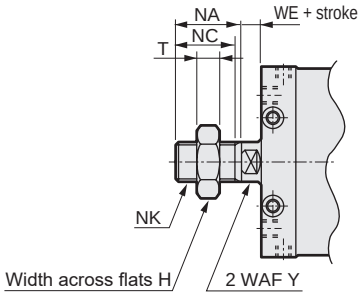

*1: This figure shows FCH-L-40.
*2: Position for Y section 2 WAF is unspecified.

● FCH (without switch)

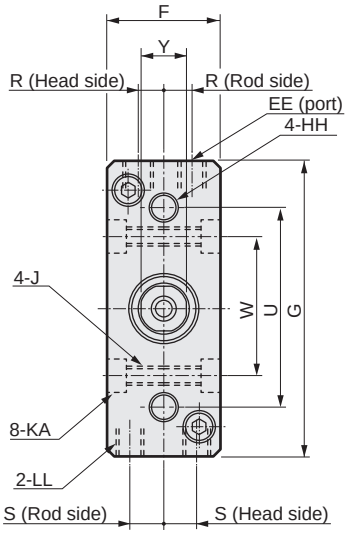

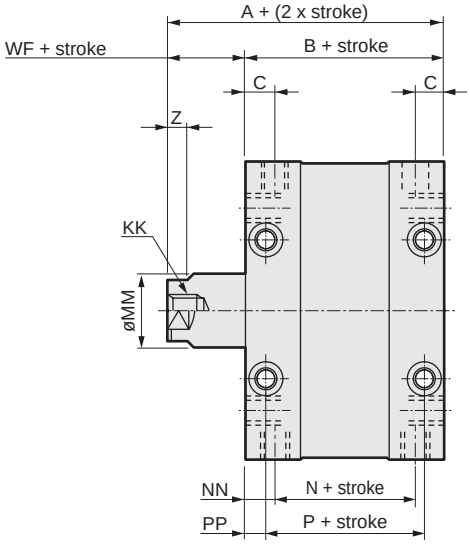

*1: This figure shows FCH-40.
*2: Position for Y section 2 WAF is unspecified.

Code / Bore size (mm)	Dimensions without switch A	B	N	P	Dimensions with switch A	B	N	P	Common dimensions C	EE	F	G	HH	J	KA
ø25 or equiv.	37	32	20	24	52	47	35	39	7.5	M5 depth 4	25	55	M5 depth 7	M5 (through)	-
ø32 or equiv.	40	33	21	25	55	48	36	40	7.5	M5 depth 4	28	65	M6 depth 8	M5 (through)	-
ø40 or equiv.	49	41	25	29	64	56	40	44	8.5	Rc1/8	32	83	M8 depth 10	M6 (through)	9.5 spot face depth 5.4
ø50 or equiv.	55.5	46	29	27	70.5	61	44	42	10.5	Rc1/8	39	101	M10 depth 12	M8 (through)	11 spot face depth 6.5
ø63 or equiv.	66.5	57	37	37	81.5	72	52	52	11.5	Rc1/4	49	125	M12 depth 15	M12 (through)	17.5 spot face depth 10.5

Code / Bore size (mm)	Common dimensions with switch KK	LL	MM	NN	PP	R	S	U	W	WF	ZZ	RD	HD	Y	Z
ø25 or equiv.	M5 depth 9	M5 depth 7	12	6	4	4.7	7	38	24	5	5.5 or less	0	0	10	5
ø32 or equiv.	M6 depth 11	M6 depth 8	16	6	4	6.2	8	45	30	7	5.5 or less	0	0	14	7
ø40 or equiv.	M8 depth 13	M8 depth 10	16	8	6	7.5	9	52	34	8	5.5 or less	0	0	14	7
ø50 or equiv.	M8 depth 13	M10 depth 12	20	8.5	9.5	9	10	62	40	9.5	5.5 or less	0	0.5	17	8
ø63 or equiv.	M10 depth 15	M12 depth 18	20	10	10	10.5	14	86	54	9.5	5.5 or less	0	4.5	17	8

● Rod end male thread dimensions

Code / Bore size (mm)	H	NA	NC	NK	T	WE
ø25 or equiv.	17	22	20	M10x1.25	6	5
ø32 or equiv.	22	22	20	M14x1.5	8	7
ø40 or equiv.	22	22	20	M14x1.5	8	7
ø50 or equiv.	27	28	26	M18x1.5	11	8
ø63 or equiv.	27	28	26	M18x1.5	11	8

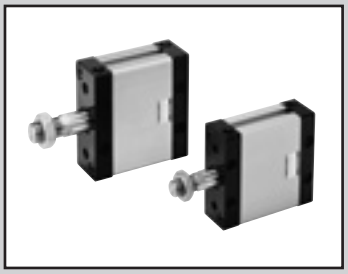

Flat compact cylinder double acting/single rod

FCD Series

● Bore size: ø25/ø32/ø40/ø50/ø63

JIS symbol 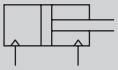

RoHS CAD

Specifications

Item	FCD FCD-L				
Bore size mm	ø25 or equiv.	ø32 or equiv.	ø40 or equiv.	ø50 or equiv.	ø63 or equiv.
Actuation	Double acting				
Working fluid	Compressed air				
Max. working pressure MPa	0.7 (≈100 psi, 7 bar)				
Min. working pressure MPa	0.07 (≈10 psi, 0.7 bar)				
Proof pressure MPa	1.05 (≈150 psi, 10.5 bar)				
Ambient temperature °C	-10 (14°F) to 60 (140°F) (no freezing)				
Port size	M5		Rc1/8		Rc1/4
Stroke tolerance mm	$^{+0.5}_{0}$ (to 50)				
Working piston speed mm/s	50 to 500				
Cushion	None				
Lubrication	Not required (turbine oil type 1 ISO VG32 if necessary for lubrication)				
Allowable absorbed energy J	0.015	0.02	0.026	0.04	0.05

Rotation-stop precision/Allowable torque

Item	ø25 or equiv.	ø32 or equiv.	ø40 or equiv.	ø50 or equiv.	ø63 or equiv.
Non-rotating accuracy *2	±1°	±0.8°	±0.5°	±0.5°	±0.5°
Allowable torque N·m	1	1.6	2.5	3.9	5.9

*1: Avoid applying rotation torque with impact, or with violent changes in torque load direction.*2: "Non-rotating

Stroke

Model No.	Bore size (mm)	Standard stroke (mm)	Max. stroke (mm)	Min. stroke (mm)
FCD	ø25, ø32 ø40, ø50 ø63 or equiv.	5/10/15/20/25 30/40/50	50	1

*1: The custom stroke is available in 1mm increments.
*2: The min. stroke varies depending on switch mounting method. Refer to the following table.

Min. stroke with switch

1		2	
Rod side installation	Head side installation	Different surface mounting	Same surface mounting
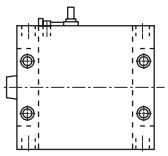	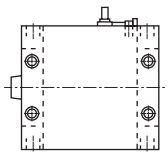	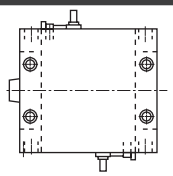	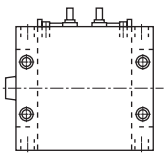
10 mm		15 mm	35 mm (ø25/32/40/50) 30 mm (ø63)

Switch specifications

● Proximity switch

Item	2-wire proximity		3-wire proximity		
	M2V	M2WV (2-color LED)	M3V	M3PV (Made to order)	M3WV (2-color LED)
Applications	Dedicated for programmable controller		Programmable controller, relay, IC circuit, small solenoid valve		
Output method	-	-	NPN output	PNP output	NPN output
Power supply voltage	-		4.5 to 28 VDC		10 to 28 VDC
Load voltage	10 to 30 VDC		30 VDC or less		
Load current	5 to 30 mA		100 mA or less	100 mA or less	100 mA or less
Indicator	LED (Lit when ON)	Red/green LED (Lit when ON)	LED (Lit when ON)	Yellow LED (Lit when ON)	Red/green LED (Lit when ON)
Leakage current	1 mA or less		10 μA or less	0.05 mA or less	10 μA or less
Weight g	1 m:22 3 m:57 5 m:93				

● Reed switch

Item	2-wire reed			
	M0V		M5V	
Applications	Programmable controller, relay		For programmable controller, relay, IC circuit (without indicator lamp), serial connection	
Power supply voltage	-		-	
Load voltage	12/24 VDC	110 VAC	5/12/24 VDC	110 VAC or less
Load current	5 to 50 mA	7 to 20 mA	50 mA or less	20 mA or less
Indicator	LED (Lit when ON)		No indicator lamp	
Leakage current	0 mA			
Weight g	1 m:22 3 m:57 5 m:93			

*1: Refer to Ending Page 1 for other switch specifications.
*2: Dimensions depend on switch model No. Refer to Ending Page 13 for details.

Cylinder weight

(Unit: g)

Item	Product weight when stroke (S) = 0 mm		Switch weight	Mounting bracket weight	Additional weight per S = 10 mm
	FCD				
Bore size (mm)	No switch	With switch			
ø25 or equiv.	130	192	Refer to the weight in the switch specifications.	2	26
ø32 or equiv.	185	275			37
ø40 or equiv.	300	423			46
ø50 or equiv.	470	658			71
ø63 or equiv.	950	1086			90

(Example) Product weight of FCD-32-20
- ● Product weight when S = 0 mm……185 g
- ● Additional weight when S = 20 mm ……37 g x $\frac{20}{10}$ = 74 g
- ● Product weight……185 g + 74 g = 259 g

Theoretical thrust table

(Unit: N)

Bore size (mm)	Operating direction	Working pressure MPa							
		0.1	0.15	0.2	0.3	0.4	0.5	0.6	0.7
ø25	Push	49.3	73.9	98.5	1.48×10^2	1.97×10^2	2.46×10^2	2.96×10^2	3.45×10^2
	Pull	37.9	56.9	75.9	1.14×10^2	1.52×10^2	1.90×10^2	2.28×10^2	2.66×10^2
ø32	Push	77.6	1.16×10^2	1.55×10^2	2.33×10^2	3.10×10^2	3.88×10^2	4.66×10^2	5.43×10^2
	Pull	57.5	86.3	1.15×10^2	1.73×10^2	2.30×10^2	2.88×10^2	3.45×10^2	4.03×10^2
ø40	Push	1.29×10^2	1.94×10^2	2.58×10^2	3.87×10^2	5.16×10^2	6.45×10^2	7.75×10^2	9.04×10^2
	Pull	1.09×10^2	1.63×10^2	2.18×10^2	3.27×10^2	4.36×10^2	5.45×10^2	6.54×10^2	7.63×10^2
ø50	Push	1.93×10^2	2.90×10^2	3.86×10^2	5.80×10^2	7.73×10^2	9.66×10^2	1.16×10^3	1.35×10^3
	Pull	1.62×10^2	2.43×10^2	3.24×10^2	4.85×10^2	6.47×10^2	8.09×10^2	9.71×10^2	1.13×10^3
ø63	Push	3.18×10^2	4.77×10^2	6.36×10^2	9.53×10^2	1.27×10^3	1.59×10^3	1.91×10^3	2.22×10^3
	Pull	2.86×10^2	4.30×10^2	5.73×10^2	8.59×10^2	1.15×10^3	1.43×10^3	1.72×10^3	2.00×10^3

SCP*3
CMK2
CMA2
SCM
SCG
SCA2
SCS2
CKV2
CAV2/COVP/N2
SSD2
SSG
SSD
CAT
MDC2
MVC
SMG
MSD/MSDG
FC*
STK
SRL3
SRG3
SRM3
SRT3
MRL2
MRG2
SM-25
ShkAbs
FJ
FK
Spd Contr
Ending

How to order

No switch (without magnet for switch)

FCD - 25 ◯ - 10 ——— N

With switch (built-in magnet for switch)

FCD-L - 25 ◯ - 10 - M2V - R - N

Ⓐ Model No.
Ⓑ Bore size
Ⓒ Port thread
Ⓓ Stroke
Ⓔ Switch model No.
* indicates the lead wire length.
Ⓕ Switch quantity
Ⓖ Option
*2

Code	Description
Ⓐ Model No.	
FCD	Double acting
FCD-L	Double acting/with switch

Ⓑ Bore size (mm)	
25	ø25
32	ø32
40	ø40
50	ø50
63	ø63

Ⓒ Port thread	
Blank	Rc thread
NN	NPT thread (ø40 or more) (made-to-order product)
GN	G thread (ø40 or more) (made-to-order product)

Ⓓ Stroke (mm)

Bore size	Stroke *1	Custom stroke
ø25 to ø63	**1 to 50**	**In 1 mm increments**

Ⓔ Switch model No.

Radial lead wire	Contact	Voltage AC	Voltage DC	Indicator	Lead wire
M2V*	Proximity		●	1-color LED	2-wire
M2WV*			●	2-color LED	
M3V*			●	1-color LED	3-wire
M3WV*			●	2-color LED	
M3PV*			●	1-color LED (made to order)	
M0V*	Reed	●	●	1-color LED	2-wire
M5V*		●	●	No indicator lamp	

*** Lead wire length**	
Blank	1 m (standard)
3	3 m (option)
5	5 m (option)

Ⓕ Switch quantity	
R	1 on rod side
H	1 on head side
D	2
T	3

Ⓖ Option	
Blank	Rod end female thread
M	Piston rod material (stainless steel)
N	Rod end male thread
R	With spigot
P6	Copper and PTFE free (copper-based/Teflon-based material is not used)

⚠ Precautions for model No. selection

*1 : Refer to page 1488 for the min. stroke with switch.
*2 : Dimensions of copper and PTFE free "P6" are the same as those of the standard.

[Example of model No.]

FCD-L-25-10-M2V-R-M

Model: Flat compact cylinder

Ⓐ Model No. : Double acting/with switch
Ⓑ Bore size : ø25 mm
Ⓒ Port thread : Rc thread
Ⓓ Stroke : 10 mm
Ⓔ Switch model No. : Proximity switch M2V
Ⓕ Switch quantity : 1 on rod side
Ⓖ Option : Piston rod material (stainless steel)

How to order switch

● Switch body + mounting bracket set

FCS - M2V

Switch model No.
(Item Ⓔ on page 1490)

● Switch body only

SW - M2V

Switch model No.
(Item Ⓔ on page 1490)

● Mounting bracket set

FCS - M

Mounting bracket

SCP*3
CMK2
CMA2
SCM
SCG
SCA2
SCS2
CKV2
CAV2/COVP/N2
SSD2
SSG
SSD
CAT
MDC2
MVC
SMG
MSD/MSDG
FC*
STK
SRL3
SRG3
SRM3
SRT3
MRL2
MRG2
SM-25
ShkAbs
FJ
FK
Spd Contr
Ending

Internal structure and parts list

● FCD-L (with switch)

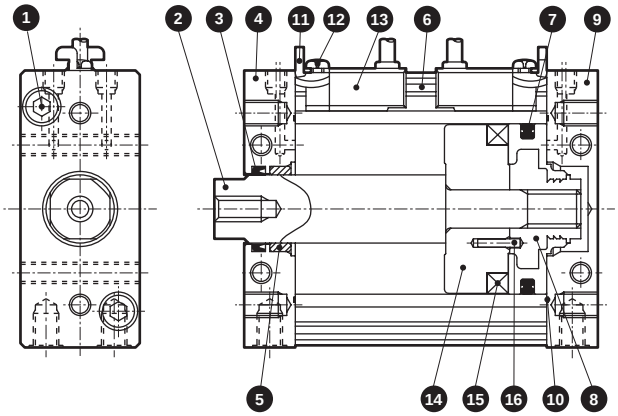

● FCD

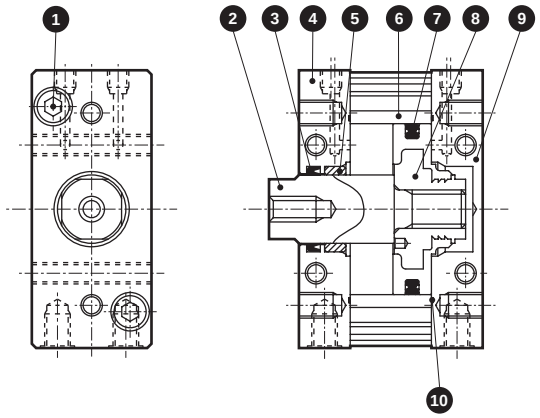

ø63

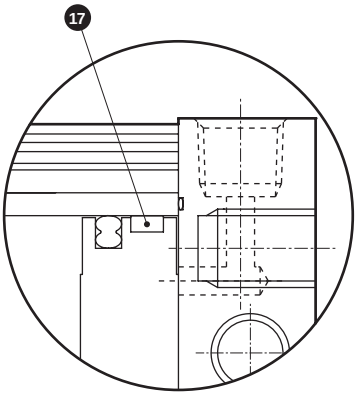

No.	Part name	Material	Remarks	No.	Part name	Material	Remarks
1	Hexagon socket head cap screw	Steel	Zinc chromate	9	Head cover	Aluminum alloy	Black alumite
2	Piston rod	Steel	Industrial chrome plating	10	Cover gasket	Nitrile rubber	
3	Rod packing	Nitrile rubber		11	Switch mounting bracket	Stainless steel	
4	Rod cover	Aluminum alloy	Black alumite	12	Cross-recessed pan head machine screw	Steel	Zinc chromate
5	Bush	Special bearing material	*1	13	Switch		
6	Tube	Aluminum alloy	Hard alumite	14	Spacer	Aluminum alloy	ø25 to ø50
7	Piston packing	Nitrile rubber				Polyamide resin	ø63
8	Piston	Aluminum alloy + Acetal resin	ø25 to ø50	15	Magnet		
				16	Spring pin	Steel	
		Aluminum alloy	ø63: Chromate	17	Wear ring	Acetal resin	

*1: Special aluminum for copper and PTFE free.

Repair parts list (common to types with/without switch)

Bore size (mm)	Kit No.	Repair parts No.
ø25 or equiv.	FCD-25K	3 7 10
ø32 or equiv.	FCD-32K	
ø40 or equiv.	FCD-40K	
ø50 or equiv.	FCD-50K	
ø63 or equiv.	FCD-63K	3 7 10 17

Dimensions

● FCD-L (double acting with switch)

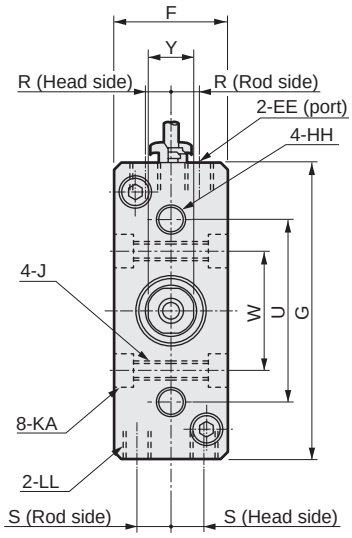

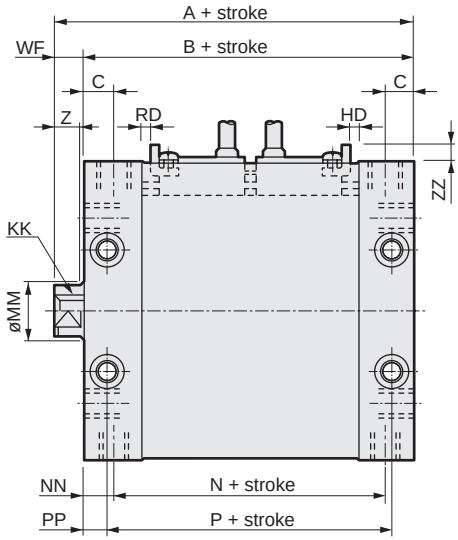

● Dimensions of rod end male thread (Option code N)

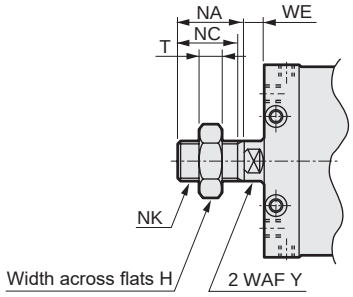

*1: This figure shows FCD-L-40.
*2: For same-surface installation with 2 switches, the stroke of 35 mm and over for ø25 to ø50 equivalent or 30 mm and over for ø63 equivalent is required. For the stroke of that value or less, set on both sides.
*3: Position for Y section 2 WAF is unspecified.

● FCD (No switch)

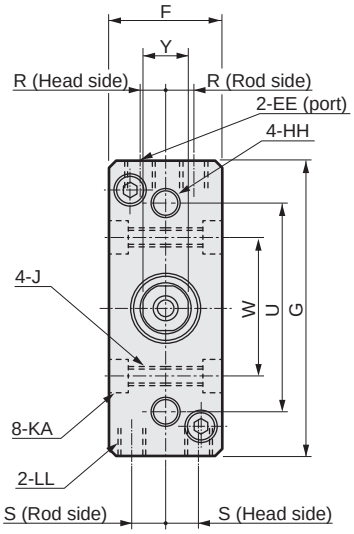

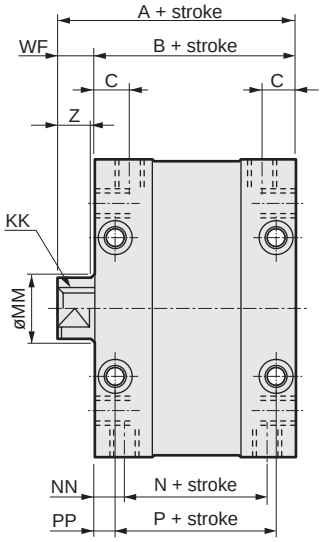

*1: This figure shows FCD-40.
*2: Position for Y section 2 WAF is unspecified.

Code / Bore size (mm)	Dimensions without switch A	B	N	P	Dimensions with switch A	B	N	P	Common dimensions C	EE	F	G	HH	J	KA
ø25 or equiv.	37	32	20	24	52	47	35	39	7.5	M5 depth 4	25	55	M5 depth 7	M5 (through)	-
ø32 or equiv.	40	33	21	25	55	48	36	40	7.5	M5 depth 4	28	65	M6 depth 8	M5 (through)	-
ø40 or equiv.	49	41	25	29	64	56	40	44	8.5	Rc1/8	32	83	M8 depth 10	M6 (through)	9.5 spot face depth 5.4
ø50 or equiv.	55.5	46	29	27	70.5	61	44	42	10.5	Rc1/8	39	101	M10 depth 12	M8 (through)	11 spot face depth 6.5
ø63 or equiv.	66.5	57	37	37	81.5	72	52	52	11.5	Rc1/4	49	125	M12 depth 15	M12 (through)	17.5 spot face depth 10.5

Code / Bore size (mm)	Common dimensions with switch KK	LL	MM	NN	PP	R	S	U	W	WF	ZZ	RD	HD	Y	Z
ø25 or equiv.	M5 depth 9	M5 depth 7	12	6	4	4.7	7	38	24	5	5.5 or less	0	0	10	5
ø32 or equiv.	M6 depth 11	M6 depth 8	16	6	4	6.2	8	45	30	7	5.5 or less	0	0	14	7
ø40 or equiv.	M8 depth 13	M8 depth 10	16	8	6	7.5	9	52	34	8	5.5 or less	0	0	14	7
ø50 or equiv.	M8 depth 13	M10 depth 12	20	8.5	9.5	9	10	62	40	9.5	5.5 or less	0	0.5	17	8
ø63 or equiv.	M10 depth 15	M12 depth 18	20	10	10	10.5	14	86	54	9.5	5.5 or less	0	4.5	17	8

● Rod end male thread dimensions

Code / Bore size (mm)	H	NA	NC	NK	T	WE
ø25 or equiv.	17	22	20	M10x1.25	6	5
ø32 or equiv.	22	22	20	M14x1.5	8	7
ø40 or equiv.	22	22	20	M14x1.5	8	7
ø50 or equiv.	27	28	26	M18x1.5	11	8
ø63 or equiv.	27	28	26	M18x1.5	11	8

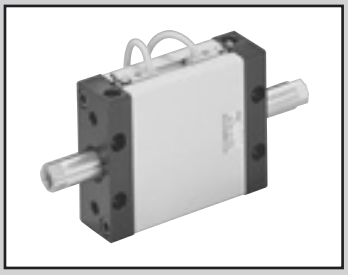

Flat compact cylinder double acting/double rod

FCD-D Series

● Bore size: ø25/ø32/ø40/ø50/ø63

JIS symbol 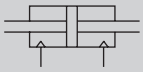

RoHS CAD

Specifications

Item	FCD-D FCD-DL				
Bore size mm	ø25 or equiv.	ø32 or equiv.	ø40 or equiv.	ø50 or equiv.	ø63 or equiv.
Actuation	Double acting/double rod				
Working fluid	Compressed air				
Max. working pressure MPa	0.7 (≈100 psi, 7 bar)				
Min. working pressure MPa	0.10 (≈15 psi, 1 bar)				
Proof pressure MPa	1.05 (≈150 psi, 10.5 bar)				
Ambient temperature °C	-10 (14°F) to 60 (140°F) (no freezing)				
Port size	M5		Rc1/8		Rc1/4
Stroke tolerance mm	$^{+0.5}_{0}$ (to 50)				
Working piston speed mm/s	50 to 500				
Cushion	None				
Lubrication	Not required (turbine oil type 1 ISO VG32 if necessary for lubrication)				
Allowable absorbed energy J	0.015	0.02	0.026	0.04	0.05

Rotation-stop precision/Allowable torque

Item	ø25 or equiv.	ø32 or equiv.	ø40 or equiv.	ø50 or equiv.	ø63 or equiv.
Non-rotating accuracy *2	±1°	±0.8°	±0.5°	±0.5°	±0.5°
Allowable torque N·m	1	1.6	2.5	3.9	5.9

*1: Avoid applying rotation torque with impact, or with violent changes in torque load direction.*2: "Non-rotating

Stroke

Model No.	Bore size (mm)	Standard stroke (mm)	Max. stroke (mm)	Min. stroke (mm)
FCD-D	ø25,ø32 ø40,ø50 ø63 or equiv.	5/10/15/20/25 30/40/50	50	1

*1: The custom stroke is available in 1mm increments.
*2: The min. stroke varies depending on switch mounting method. Refer to the following table.

Min. stroke with switch

1		2	
Rod side installation	Head side installation	Different surface mounting	Same surface mounting
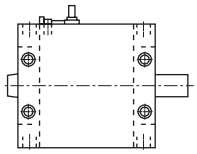	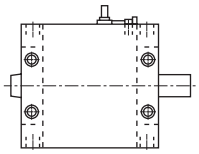	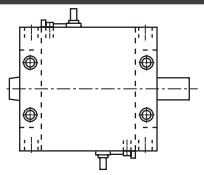	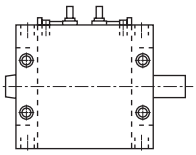
10 mm		15 mm	35 mm (ø25/32/40/50) 30 mm (ø63)

Switch specifications

● Proximity switch

Item	2-wire proximity		3-wire proximity		
	M2V	M2WV (2-color LED)	M3V	M3PV (Made to order)	M3WV (2-color LED)
Applications	Dedicated for programmable controller		Programmable controller, relay, IC circuit, small solenoid valve		
Output method	-	-	NPN output	PNP output	NPN output
Power supply voltage	-		4.5 to 28 VDC		10 to 28 VDC
Load voltage	10 to 30 VDC		30 VDC or less		
Load current	5 to 30 mA		100 mA or less	100 mA or less	100 mA or less
Indicator	LED (Lit when ON)	Red/green LED (Lit when ON)	LED (Lit when ON)	Yellow LED (Lit when ON)	Red/green LED (Lit when ON)
Leakage current	1 mA or less		10 μA or less	0.05 mA or less	10 μA or less
Weight g	1 m:22 3 m:57 5 m:93				

● Reed switch

Item	2-wire reed			
	M0V		M5V	
Applications	Programmable controller, relay		For programmable controller, relay, IC circuit (without indicator lamp), serial connection	
Power supply voltage	-		-	
Load voltage	12/24 VDC	110 VAC	5/12/24 VDC	110 VAC or less
Load current	5 to 50 mA	7 to 20 mA	50 mA or less	20 mA or less
Indicator	LED (Lit when ON)		No indicator lamp	
Leakage current	0 mA			
Weight g	1 m:22 3 m:57 5 m:93			

*1: Refer to Ending Page 1 for other switch specifications.
*2: Dimensions depend on switch model No. Refer to Ending Page 13 for details.

Cylinder weight

(Unit: g)

Item	Product weight when stroke (S) = 0 mm		Switch weight	Mounting bracket weight	Additional weight per S = 10 mm
	FCD-D				
Bore size (mm)	No switch	With switch			
ø25 or equiv.	145	220	Refer to the weight in the switch specifications.	2	35
ø32 or equiv.	215	330			53
ø40 or equiv.	330	478			62
ø50 or equiv.	545	773			96
ø63 or equiv.	1050	1226			115

(Example) Product weight of FCD-D-32-20
- ● Product weight when S = 0 mm.....215 g
- ● Additional weight when S = 20 mm .....53g x $\frac{20}{10}$ = 106 g
- ● Product weight.....215 g + 106 g = 321 g

Theoretical thrust table

(Unit: N)

Bore size (mm)	Operating direction	Working pressure MPa							
		0.1	0.15	0.2	0.3	0.4	0.5	0.6	0.7
ø25	Push/Pull	37.9	56.9	75.9	1.14×10^2	1.52×10^2	1.90×10^2	2.28×10^2	2.66×10^2
ø32	Push/Pull	57.5	86.3	1.15×10^2	1.73×10^2	2.30×10^2	2.88×10^2	3.45×10^2	4.03×10^2
ø40	Push/Pull	1.09×10^2	1.63×10^2	2.18×10^2	3.27×10^2	4.36×10^2	5.45×10^2	6.54×10^2	7.63×10^2
ø50	Push/Pull	1.62×10^2	2.43×10^2	3.24×10^2	4.85×10^2	6.47×10^2	8.09×10^2	9.71×10^2	1.13×10^3
ø63	Push/Pull	2.86×10^2	4.30×10^2	5.73×10^2	8.59×10^2	1.15×10^3	1.43×10^3	1.72×10^3	2.00×10^3

SCP*3
CMK2
CMA2
SCM
SCG
SCA2
SCS2
CKV2
CAV2/COVP/N2
SSD2
SSG
SSD
CAT
MDC2
MVC
SMG
MSD/MSDG
FC*
STK
SRL3
SRG3
SRM3
SRT3
MRL2
MRG2
SM-25
ShkAbs
FJ
FK
Spd Contr
Ending

How to order

No switch (without magnet for switch)

FCD-D - 25 ◯ - 10 ——— N

With switch (built-in magnet for switch)

FCD-DL - 25 ◯ - 10 - M2V - R - N

Ⓐ Model No.

Ⓑ Bore size

Ⓒ Port thread

Ⓓ Stroke

Ⓔ Switch model No.
* indicates the lead wire length.

Ⓕ Switch quantity

Ⓖ Option
*2

Code	Description
Ⓐ Model No.	
FCD-D	Double acting/double rod
FCD-DL	Double acting/double rod/with switch

Ⓑ Bore size (mm)	
25	ø25
32	ø32
40	ø40
50	ø50
63	ø63

Ⓒ Port thread	
Blank	Rc thread
NN	NPT thread (ø40 or more) (made-to-order product)
GN	G thread (ø40 or more) (made-to-order product)

Ⓓ Stroke (mm)

Bore size	Stroke *1	Custom stroke
ø25 to ø63	**1 to 50**	**In 1 mm increments**

Ⓔ Switch model No.

Radial lead wire	Contact	Voltage AC	Voltage DC	Indicator	Lead wire
M2V*	Proximity		●	1-color LED	2-wire
M2WV*			●	2-color LED	
M3V*			●	1-color LED	3-wire
M3WV*			●	2-color LED	
M3PV*			●	1-color LED (made to order)	
M0V*	Reed	●	●	1-color LED	2-wire
M5V*		●	●	No indicator lamp	

*** Lead wire length**	
Blank	1 m (standard)
3	3 m (option)
5	5 m (option)

Ⓕ Switch quantity	
R	1 on rod side
H	1 on head side
D	2
T	3

Ⓖ Option	
Blank	Rod end female thread
M	Piston rod material (stainless steel)
N	Rod end male thread
R	With spigot
P6	Copper and PTFE free (copper-based/Teflon-based material is not used)

⚠ Precautions for model No. selection

*1 : Refer to page 1494 for the min. stroke with switch.
*2 : Dimensions of copper and PTFE free "P6" are the same as those of the standard.

[Example of model No.]

FCD-DL-25-10-M2V-R-M

Model: Flat compact cylinder

Ⓐ Model No. : Double acting/double rod/with switch
Ⓑ Bore size : ø25 mm
Ⓒ Port thread : Rc thread
Ⓓ Stroke : 10 mm
Ⓔ Switch model No. : Proximity switch M2V
Ⓕ Switch quantity : 1 on rod side
Ⓖ Option : Piston rod material (stainless steel)

How to order switch

● Switch body + mounting bracket set

FCS - M2V

Switch model No.
(Item Ⓔ on page 1496)

● Switch body only

SW - M2V

Switch model No.
(Item Ⓔ on page 1496)

● Mounting bracket set

FCS - M

Mounting bracket

SCP*3
CMK2
CMA2
SCM
SCG
SCA2
SCS2
CKV2
CAV2/ COVP/N2
SSD2
SSG
SSD
CAT
MDC2
MVC
SMG
MSD/ MSDG
FC*
STK
SRL3
SRG3
SRM3
SRT3
MRL2
MRG2
SM-25
ShkAbs
FJ
FK
Spd Contr
Ending

Internal structure and parts list

● FCD-DL (with switch)

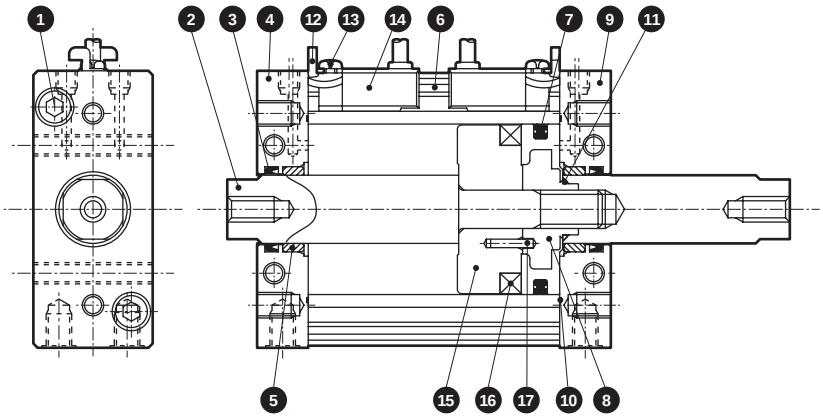

● FCD-D

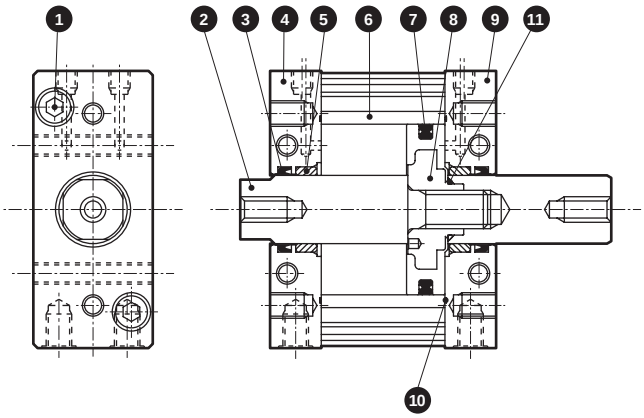

ø63

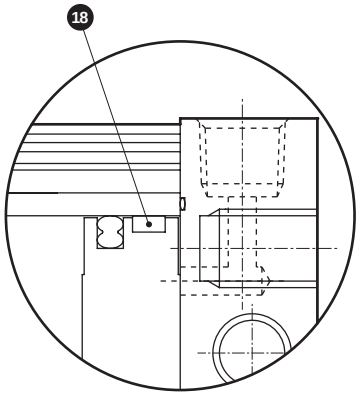

No.	Part name	Material	Remarks
1	Hexagon socket head cap screw	Steel	Zinc chromate
2	Piston rod	Steel	Industrial chrome plating
3	Rod packing	Nitrile rubber	
4	Rod cover	Aluminum alloy	Black alumite
5	Bush	Special bearing material	*1
6	Tube	Aluminum alloy	Hard alumite
7	Piston packing	Nitrile rubber	
8	Piston	Aluminum alloy + Acetal resin	ø25 to ø50
		Aluminum alloy	ø63: Chromate
9	Head cover	Aluminum alloy	Black alumite

No.	Part name	Material	Remarks
10	Cover gasket	Nitrile rubber	
11	Piston gasket	Nitrile rubber	
12	Switch mounting bracket	Stainless steel	
13	Cross-recessed pan head machine screw	Steel	Zinc chromate
14	Switch		
15	Spacer	Aluminum alloy	ø25 to ø50
		Polyamide resin	ø63
16	Magnet		
17	Spring pin	Steel	
18	Wear ring	Acetal resin	

*1: Special aluminum for copper and PTFE free.

Repair parts list (common to types with/without switch)

Bore size (mm)	Kit No.	Repair parts No.
ø25 or equiv.	FCD-D-25K	3 7 10
ø32 or equiv.	FCD-D-32K	
ø40 or equiv.	FCD-D-40K	
ø50 or equiv.	FCD-D-50K	
ø63 or equiv.	FCD-D-63K	3 7 10 18

Dimensions

● FCD-DL (double acting double rod with switch)

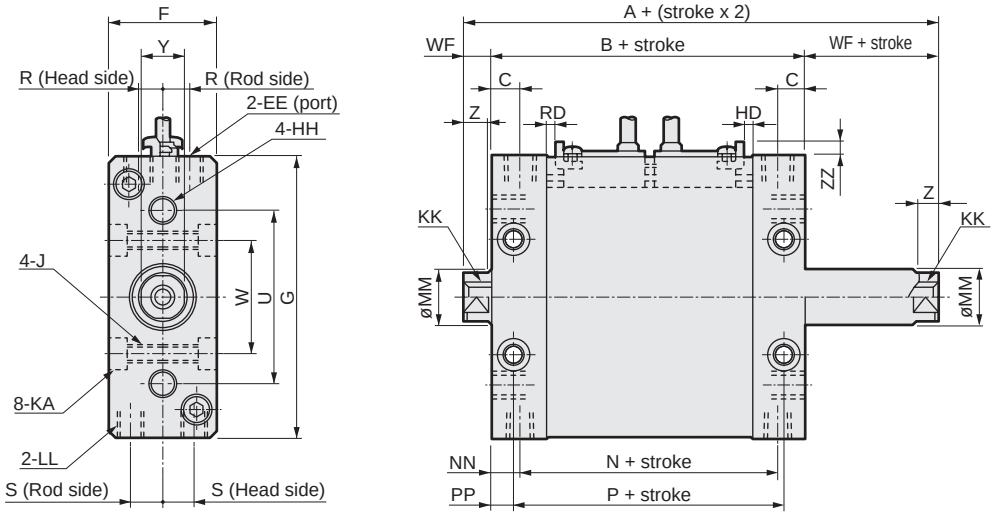

● Dimensions of rod end male thread (Option code: N)

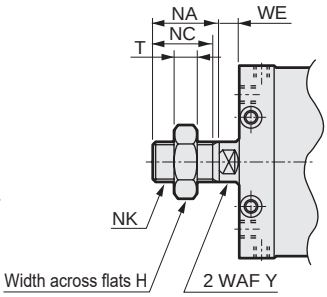

*1: This figure shows FCD-DL-40.
*2: For same-surface installation with 2 switches, the stroke of 35 mm and over for ø25 to ø50 equivalent or 30 mm and over for ø63 equivalent is required. For the stroke of that value or less, set on both sides.
*3: Position for Y section 2 WAF is unspecified.

● FCD-D (without switch)

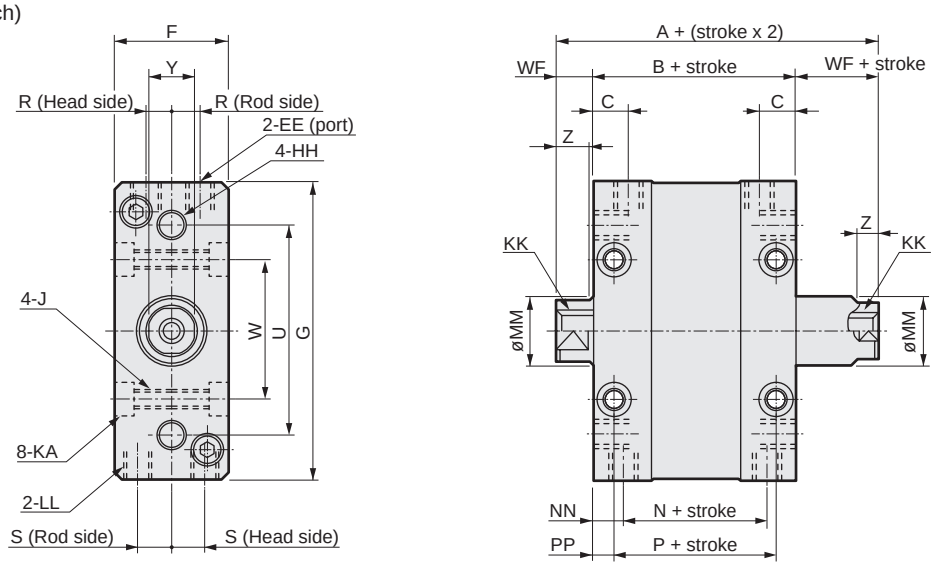

*1: This figure shows FCD-D-40.
*2: Position for Y section 2 WAF is unspecified.

Code / Bore size (mm)	Dimensions without switch				Dimensions with switch				Common dimensions						
	A	B	N	P	A	B	N	P	C	EE	F	G	HH	J	KA
ø25 or equiv.	42	32	20	24	57	47	35	39	7.5	M5 depth 4	25	55	M5 depth 7	M5 (through)	-
ø32 or equiv.	47	33	21	25	62	48	36	40	7.5	M5 depth 4	28	65	M6 depth 8	M5 (through)	-
ø40 or equiv.	57	41	25	29	72	56	40	44	8.5	Rc1/8	32	83	M8 depth 10	M6 (through)	9.5 spot face depth 5.4
ø50 or equiv.	65	46	29	27	80	61	44	42	10.5	Rc1/8	39	101	M10 depth 12	M8 (through)	11 spot face depth 6.5
ø63 or equiv.	76	57	37	37	91	72	52	52	11.5	Rc1/4	49	125	M12 depth 15	M12 (through)	17.5 spot face depth 10.5

Code / Bore size (mm)	Common dimensions with switch														
	KK	LL	MM	NN	PP	R	S	U	W	WF	ZZ	RD	HD	Y	Z
ø25 or equiv.	M5 depth 9	M5 depth 7	12	6	4	4.7	7	38	24	5	5.5 or less	0	0	10	5
ø32 or equiv.	M6 depth 11	M6 depth 8	16	6	4	6.2	8	45	30	7	5.5 or less	0	0	14	7
ø40 or equiv.	M8 depth 13	M8 depth 10	16	8	6	7.5	9	52	34	8	5.5 or less	0	0	14	7
ø50 or equiv.	M8 depth 13	M10 depth 12	20	8.5	9.5	9	10	62	40	9.5	5.5 or less	0	0.5	17	8
ø63 or equiv.	M10 depth 15	M12 depth 18	20	10	10	10.5	14	86	54	9.5	5.5 or less	0	4.5	17	8

● Rod end male thread dimensions

Code / Bore size (mm)	H	NA	NC	NK	T	WE
ø25 or equiv.	17	22	20	M10x1.25	6	5
ø32 or equiv.	22	22	20	M14x1.5	8	7
ø40 or equiv.	22	22	20	M14x1.5	8	7
ø50 or equiv.	27	28	26	M18x1.5	11	8
ø63 or equiv.	27	28	26	M18x1.5	11	8

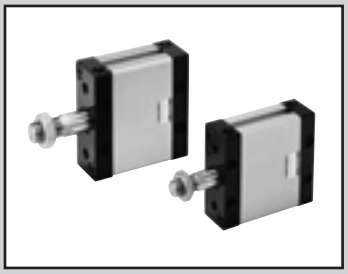

Flat compact cylinder double acting/cushioned

FCD-K Series

● Bore size: ø25/ø32/ø40/ø50/ø63

JIS symbol 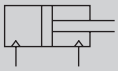

RoHS CAD

Specifications

Item	FCD-K FCD-KL				
Bore size mm	ø25 or equiv.	ø32 or equiv.	ø40 or equiv.	ø50 or equiv.	ø63 or equiv.
Actuation	Double acting/cushioned				
Working fluid	Compressed air				
Max. working pressure MPa	0.7 (≈100 psi, 7 bar)				
Min. working pressure MPa	0.07 (≈10 psi, 0.7 bar)				
Proof pressure MPa	1.05 (≈150 psi, 10.5 bar)				
Ambient temperature °C	-10 (14°F) to 60 (140°F) (no freezing)				
Port size	M5		Rc1/8		Rc1/4
Stroke tolerance mm	$^{+1.5}_{0}$ (to 50), $^{+2.0}_{0}$ (to 150)				
Working piston speed mm/s	50 to 500				
Cushion	Rubber cushion				
Lubrication	Not required (turbine oil class 1 ISO VG32 if necessary for lubrication)				
Allowable absorbed energy J	0.34	0.54	0.67	1.02	1.56

Rotation-stop precision/Allowable torque

Item	ø25 or equiv.	ø32 or equiv.	ø40 or equiv.	ø50 or equiv.	ø63 or equiv.
Non-rotating accuracy *2	±1°	±0.8°	±0.5°	±0.5°	±0.5°
Allowable torque N·m	1	1.6	2.5	3.9	5.9

*1: Avoid applying rotation torque with impact, or with violent changes in torque load direction.*2: "Non-rotating

Stroke

Model No.	Bore size (mm)	Standard stroke (mm)	Max. stroke (mm)	Min. stroke (mm)
FCD-K	ø25, ø32 ø40, ø50 ø63 or equiv.	5/10/15/20/25 30/40/50	150	1

*1: The custom stroke is available in 1mm increments.
*2: The min. stroke varies depending on switch mounting method. Refer to the following table.

Min. stroke with switch

1		2	
Rod side installation	Head side installation	Different surface mounting	Same surface mounting
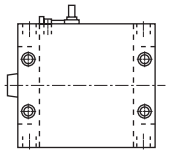	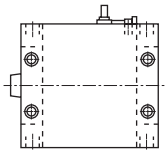	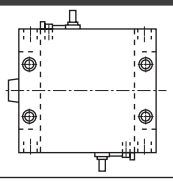	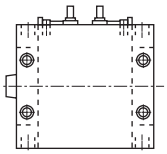
10 mm		15 mm	35 mm (ø25/32/40/50) 30 mm (ø63)

Switch specifications

● Proximity switch

Item	2-wire proximity		3-wire proximity		
	M2V	M2WV (2-color LED)	M3V	M3PV (Made to order)	M3WV (2-color LED)
Applications	Dedicated for programmable controller		Programmable controller, relay, IC circuit, small solenoid valve		
Output method	-	-	NPN output	PNP output	NPN output
Power supply voltage	-		4.5 to 28 VDC		10 to 28 VDC
Load voltage	10 to 30 VDC		30 VDC or less		
Load current	5 to 30 mA		100 mA or less	100 mA or less	100 mA or less
Indicator	LED (Lit when ON)	Red/green LED (Lit when ON)	LED (Lit when ON)	Yellow LED (Lit when ON)	Red/green LED (Lit when ON)
Leakage current	1 mA or less		10 μA or less	0.05 mA or less	10 μA or less
Weight g	1 m:22 3 m:57 5 m:93				

● Reed switch

Item	2-wire reed			
	M0V		M5V	
Applications	Programmable controller, relay		For programmable controller, relay, IC circuit (without indicator lamp), serial connection	
Power supply voltage	-		-	
Load voltage	12/24 VDC	110 VAC	5/12/24 VDC	110 VAC or less
Load current	5 to 50 mA	7 to 20 mA	50 mA or less	20 mA or less
Indicator	LED (Lit when ON)		No indicator lamp	
Leakage current	0 mA			
Weight g	1 m:22 3 m:57 5 m:93			

*1: Refer to Ending Page 1 for other switch specifications.
*2: Dimensions depend on switch model No. Refer to Ending Page 13 for details.

Cylinder weight

(Unit: g)

Item	Product weight when stroke (S) = 0 mm		Switch weight	Mounting bracket weight	Additional weight per S = 10 mm
	FCD-K				
Bore size (mm)	No switch	With switch			
ø25 or equiv.	155	221	Refer to the weight in the switch specifications.	2	26
ø32 or equiv.	225	316			37
ø40 or equiv.	355	481			46
ø50 or equiv.	550	741			71
ø63 or equiv.	1135	1196			90

(Example) Product weight of FCD-K-32-20
- ● Product weight when S = 0 mm.....225 g
- ● Additional weight when S = 20 mm .....37 g x $\frac{20}{10}$ = 74 g
- ● Product weight.....225 g + 74 g = 299 g

Theoretical thrust table

(Unit: N)

Bore size (mm)	Operating direction	Working pressure MPa							
		0.1	0.15	0.2	0.3	0.4	0.5	0.6	0.7
ø25	Push	49.3	73.9	98.5	1.48×10^2	1.97×10^2	2.46×10^2	2.96×10^2	3.45×10^2
	Pull	37.9	56.9	75.9	1.14×10^2	1.52×10^2	1.90×10^2	2.28×10^2	2.66×10^2
ø32	Push	77.6	1.16×10^2	1.55×10^2	2.33×10^2	3.10×10^2	3.88×10^2	4.66×10^2	5.43×10^2
	Pull	57.5	86.3	1.15×10^2	1.73×10^2	2.30×10^2	2.88×10^2	3.45×10^2	4.03×10^2
ø40	Push	1.29×10^2	1.94×10^2	2.58×10^2	3.87×10^2	5.16×10^2	6.45×10^2	7.75×10^2	9.04×10^2
	Pull	1.09×10^2	1.63×10^2	2.18×10^2	3.27×10^2	4.36×10^2	5.45×10^2	6.54×10^2	7.63×10^2
ø50	Push	1.93×10^2	2.90×10^2	3.86×10^2	5.80×10^2	7.73×10^2	9.66×10^2	1.16×10^3	1.35×10^3
	Pull	1.62×10^2	2.43×10^2	3.24×10^2	4.85×10^2	6.47×10^2	8.09×10^2	9.71×10^2	1.13×10^3
ø63	Push	3.18×10^2	4.77×10^2	6.36×10^2	9.53×10^2	1.27×10^3	1.59×10^3	1.91×10^3	2.22×10^3
	Pull	2.86×10^2	4.30×10^2	5.73×10^2	8.59×10^2	1.15×10^3	1.43×10^3	1.72×10^3	2.00×10^3

SCP*3
CMK2
CMA2
SCM
SCG
SCA2
SCS2
CKV2
CAV2/COVP/N2
SSD2
SSG
SSD
CAT
MDC2
MVC
SMG
MSD/MSDG
FC*
STK
SRL3
SRG3
SRM3
SRT3
MRL2
MRG2
SM-25
ShkAbs
FJ
FK
Spd Contr
Ending

How to order

No switch (without magnet for switch)

FCD-K - 25 ◯ - 10 ——— N

With switch (built-in magnet for switch)

FCD-KL - 25 ◯ - 10 - M2V - R - N

Ⓐ Model No.
Ⓑ Bore size
Ⓒ Port thread
Ⓓ Stroke
Ⓔ Switch model No.
* indicates the lead wire length.
Ⓕ Switch quantity
Ⓖ Option *2

Code	Description
Ⓐ Model No.	
FCD-K	Double acting/cushioned
FCD-KL	Double acting/cushioned/with switch

Ⓑ Bore size (mm)	
25	ø25
32	ø32
40	ø40
50	ø50
63	ø63

Ⓒ Port thread	
Blank	Rc thread
NN	NPT thread (ø40 or more) (made-to-order product)
GN	G thread (ø40 or more) (made-to-order product)

Ⓓ Stroke (mm)

Bore size	Stroke *1	Custom stroke
ø25 to ø63	**1 to 150**	**In 1 mm increments**

Ⓔ Switch model No.

Radial lead wire	Contact	Voltage AC	Voltage DC	Indicator	Lead wire
M2V*	Proximity		●	1-color LED	2-wire
M2WV*			●	2-color LED	
M3V*			●	1-color LED	3-wire
M3WV*			●	2-color LED	
M3PV*			●	1-color LED (made to order)	
M0V*	Reed	●	●	1-color LED	2-wire
M5V*		●	●	No indicator lamp	

*** Lead wire length**	
Blank	1 m (standard)
3	3 m (option)
5	5 m (option)

Ⓕ Switch quantity	
R	1 on rod side
H	1 on head side
D	2
T	3

Ⓖ Option	
Blank	Rod end female thread
M	Piston rod material (stainless steel)
N	Rod end male thread
R	With spigot
P6	Copper and PTFE free (copper-based/Teflon-based material is not used)

⚠ Precautions for model No. selection

*1 : Refer to page 1500 for the min. stroke with switch.
*2 : Dimensions of copper and PTFE free "P6" are the same as those of the standard.

[Example of model No.]

FCD-KL-25-10-M2V-R-M

Model: Flat compact cylinder

Ⓐ Model No. : Double acting/cushioned/with switch
Ⓑ Bore size : ø25 mm
Ⓒ Port thread : Rc thread
Ⓓ Stroke : 10 mm
Ⓔ Switch model No. : Proximity switch M2V
Ⓕ Switch quantity : 1 on rod side
Ⓖ Option : Piston rod material (stainless steel)

How to order switch

● Switch body + mounting bracket set

FCS - M2V

Switch model No.
(Item Ⓔ on page 1502)

● Switch body only

SW - M2V

Switch model No.
(Item Ⓔ on page 1502)

● Mounting bracket set

FCS - M

Mounting bracket

SCP*3
CMK2
CMA2
SCM
SCG
SCA2
SCS2
CKV2
CAV2/COVP/N2
SSD2
SSG
SSD
CAT
MDC2
MVC
SMG
MSD/MSDG
FC*
STK
SRL3
SRG3
SRM3
SRT3
MRL2
MRG2
SM-25
ShkAbs
FJ
FK
Spd Contr
Ending

Internal structure and parts list

● FCD-KL (with switch)

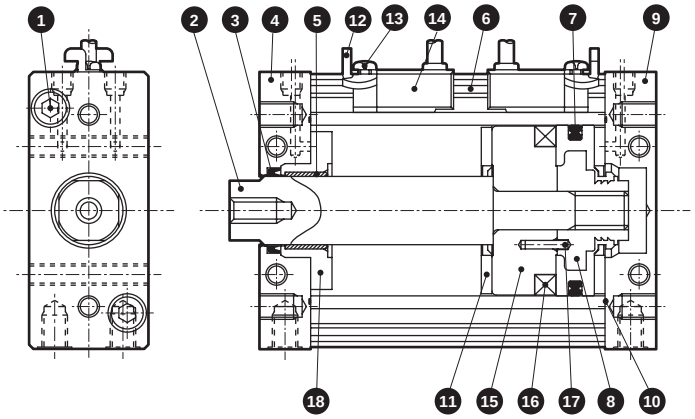

● FCD-K

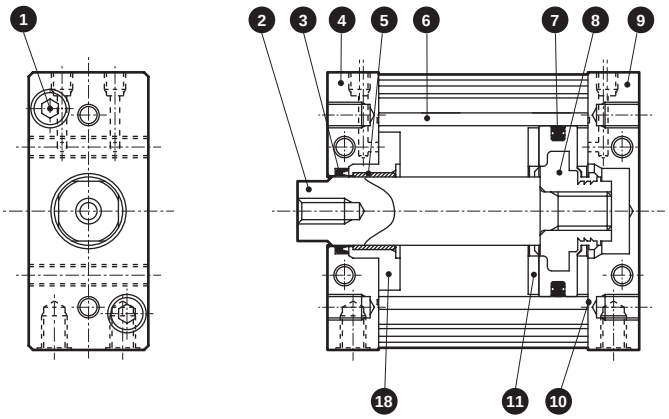

ø63

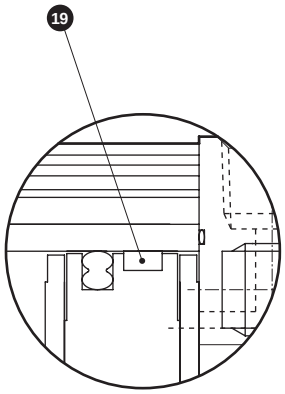

No.	Part name	Material	Remarks	No.	Part name	Material	Remarks
1	Hexagon socket head cap screw	Steel	Zinc chromate	10	Cover gasket	Nitrile rubber	
2	Piston rod	Steel	Industrial chrome plating	11	Cushion rubber	Urethane rubber	
3	Rod packing	Nitrile rubber		12	Switch mounting bracket	Stainless steel	
4	Rod cover	Aluminum alloy	Black alumite	13	Cross-recessed pan head machine screw	Steel	Zinc chromate
5	Bush	Special bearing material	*1	14	Switch		
6	Tube	Aluminum alloy	Hard alumite	15	Spacer	Aluminum alloy	ø25 to ø50
7	Piston packing	Nitrile rubber				Polyamide resin	ø63
8	Piston	Aluminum alloy + Acetal resin	ø25 to ø50	16	Magnet		
				17	Spring pin	Steel	
		Aluminum alloy	ø63: Chromate	18	Bush spacer	Aluminum alloy	ø63: Chromate
9	Head cover	Aluminum alloy	Black alumite	19	Wear ring	Acetal resin	

*1: Special aluminum for copper and PTFE free.

Repair parts list (common to types with/without switch)

Bore size (mm)	Kit No.	Repair parts No.
ø25 or equiv.	FCD-K-25K	3 7 10 11
ø32 or equiv.	FCD-K-32K	
ø40 or equiv.	FCD-K-40K	
ø50 or equiv.	FCD-K-50K	
ø63 or equiv.	FCD-K-63K	3 7 10 11 19

Dimensions

● FCD-KL (double acting cushioned, with switch)

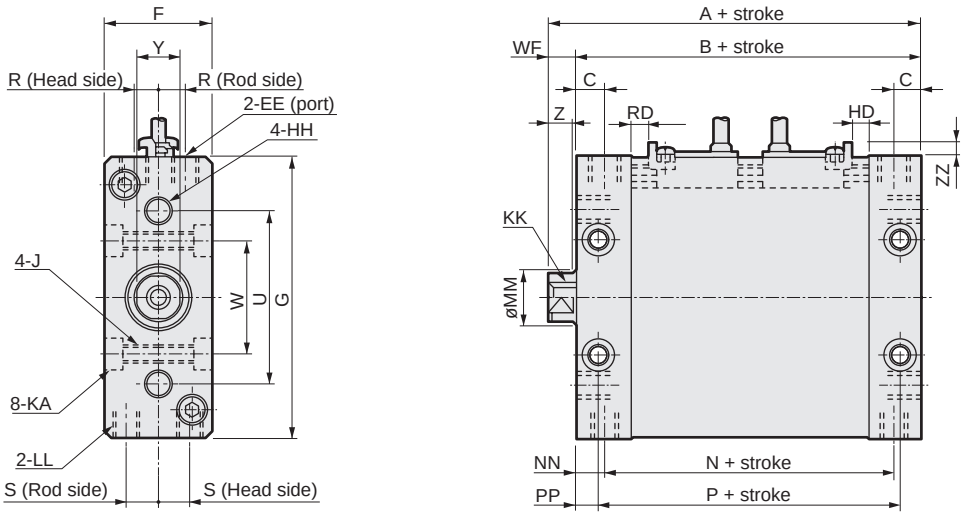

● Dimensions of rod end male thread (Option code: N)

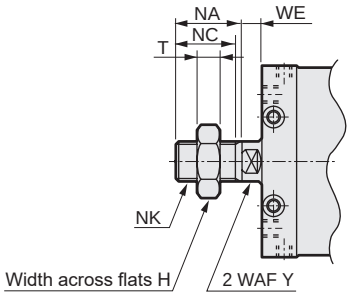

*1: This figure shows FCD-KL-40.
*2: For same-surface installation with 2 switches, the stroke of 35 mm and over for ø25 to ø50 equivalent or 30 mm and over for ø63 equivalent is required. For the stroke of that value or less, set on both sides.
*3: Position for Y section 2 WAF is unspecified.

● FCD-K (without switch)

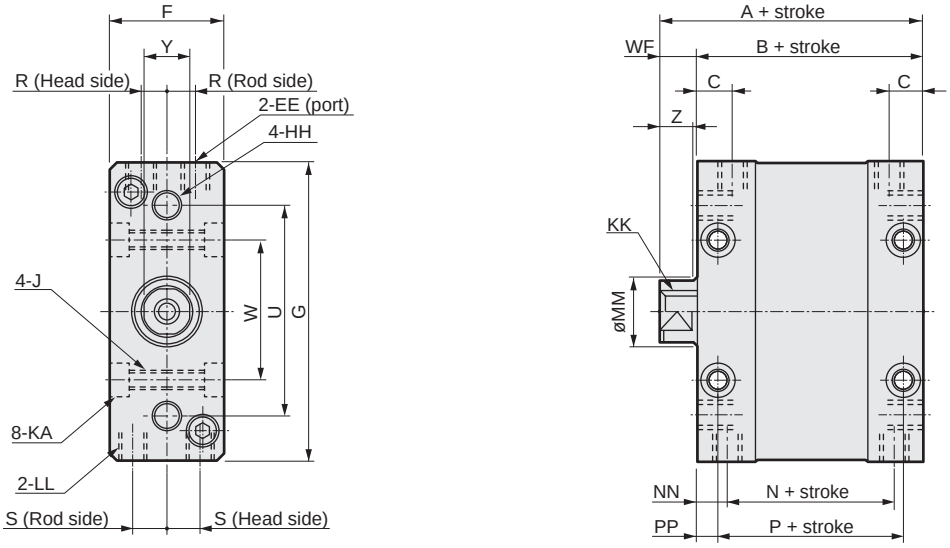

*1: This figure shows FCD-K-32.
*2: Position for Y section 2 WAF is unspecified.

Code	Dimensions without switch				Dimensions with switch				Common dimensions						
Bore size (mm)	A	B	N	P	A	B	N	P	C	EE	F	G	HH	J	KA
ø25 or equiv.	47	42	30	34	62	57	45	49	7.5	M5 depth 4	25	55	M5 depth 7	M5 (through)	-
ø32 or equiv.	50	43	31	35	65	58	46	50	7.5	M5 depth 4	28	65	M6 depth 8	M5 (through)	-
ø40 or equiv.	59	51	35	39	74	66	50	54	8.5	Rc1/8	32	83	M8 depth 10	M6 (through)	9.5 spot face depth 5.4
ø50 or equiv.	65.5	56	39	37	80.5	71	54	52	10.5	Rc1/8	39	101	M10 depth 12	M8 (through)	11 spot face depth 6.5
ø63 or equiv.	76.5	67	47	47	91.5	82	62	62	11.5	Rc1/4	49	125	M12 depth 15	M12 (through)	17.5 spot face depth 10.5

Code	Common dimensions with switch														
Bore size (mm)	KK	LL	MM	NN	PP	R	S	U	W	WF	ZZ	RD	HD	Y	Z
ø25 or equiv.	M5 depth 9	M5 depth 7	12	6	4	4.7	7	38	24	5	5.5 or less	6	1	10	5
ø32 or equiv.	M6 depth 11	M6 depth 8	16	6	4	6.2	8	45	30	7	5.5 or less	7	1	14	7
ø40 or equiv.	M8 depth 13	M8 depth 10	16	8	6	7.5	9	52	34	8	5.5 or less	7	2	14	7
ø50 or equiv.	M8 depth 13	M10 depth 12	20	8.5	9.5	9	10	62	40	9.5	5.5 or less	7	3	17	8
ø63 or equiv.	M10 depth 15	M12 depth 18	20	10	10	10.5	14	86	54	9.5	5.5 or less	7	7	17	8

● Rod end male thread dimensions

Code / Bore size (mm)	H	NA	NC	NK	T	WE
ø25 or equiv.	17	22	20	M10x1.25	6	5
ø32 or equiv.	22	22	20	M14x1.5	8	7
ø40 or equiv.	22	22	20	M14x1.5	8	7
ø50 or equiv.	27	28	26	M18x1.5	11	8
ø63 or equiv.	27	28	26	M18x1.5	11	8

SCP*3
CMK2
CMA2
SCM
SCG
SCA2
SCS2
CKV2
CAV2/COVP/N2
SSD2
SSG
SSD
CAT
MDC2
MVC
SMG
MSD/MSDG
FC*
STK
SRL3
SRG3
SRM3
SRT3
MRL2
MRG2
SM-25
ShkAbs
FJ
FK
Spd Contr
Ending

FC Series common dimensions: Option (with spigot)

● Dimensions with spigot (option code R)

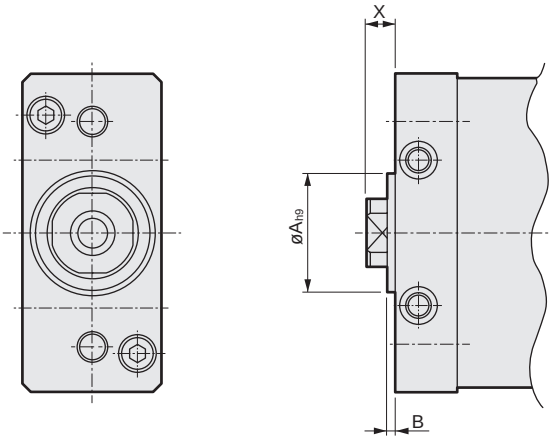

Code / Bore size (mm)	A	B	X
ø25 or equiv.	20	$2^{0}_{-0.4}$	5
ø32 or equiv.	24	$2^{0}_{-0.4}$	7
ø40 or equiv.	28	$2^{0}_{-0.4}$	8
ø50 or equiv.	32	$2^{0}_{-0.4}$	9.5
ø63 or equiv.	32	$2^{0}_{-0.4}$	9.5

Safety Precautions

Be sure to read this section before use.

Refer to Intro Page 73 for general information of the cylinder, and to Intro Page 80 for general information of the cylinder switch.

Product-specific cautions: Flat compact cylinder FC* Series

Mounting, installation and adjustment

1. Common

CAUTION

- For male threads with load mounted on ends, fix the wrench hook at the end of the rod with a wrench and tighten.

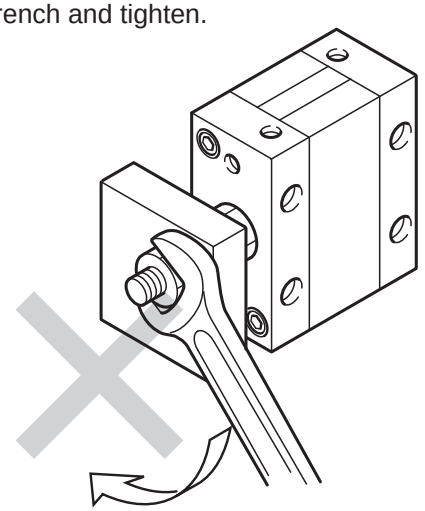

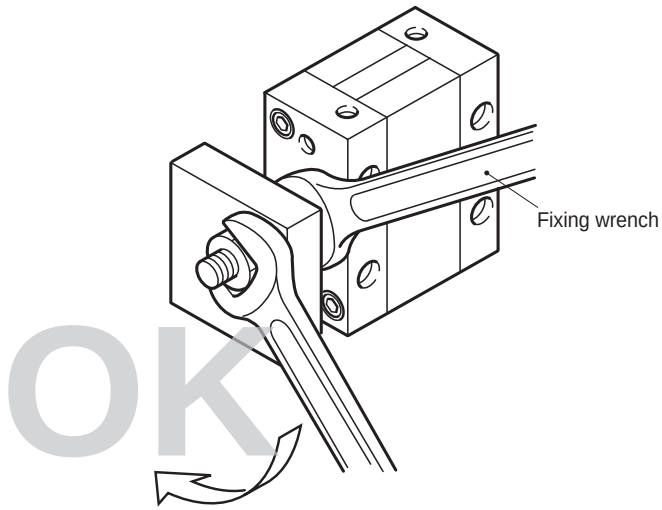

- For female threads, fix the wrench hook at the end of the rod with a wrench using a standard tool (Allen wrench), and tighten.

- Avoid using the product so as to apply rotation torque to the piston rod. When inevitable, use within the allowable torque range.

Item \ Model No.	ø25	ø32	ø40	ø50	ø63
Allowable torque (N·m)	1	1.6	2.5	3.9	5.9

● Do not apply rotation torque with impact, or with instantaneous changes in torque load direction.

2. Single acting FCS/FCH

CAUTION

- Do not leave in a pressurized state. If it is left pressurized for long periods, the piston rod may not return due to spring load when the pressure is released.

STK

Stopper cylinder

ø20/ø32/ø40/ø50

Space saving structure

Overview

This is a square, space saving cylinder that can be used for applications in which a lateral load is applied to the piston rod.

Features

Design for high load

Space saving square shape

Direct mounting

Type with rod end female thread is available

CONTENTS

Series variation	1510
● Double acting/round rod end form (STK)	1512
● Single acting/pull/round rod end form (STK-Y)	1518
● Double acting/spring integrated/round rod end form (STK-Y1)	1524
● Double acting/rod end form chamfered type (STK-M)	1530
● Single acting/pull/rod end form chamfered type (STK-MY)	1536
● Double acting/spring integrated/rod end form chamfered type (STK-MY1)	1542
● Single acting/pull/rod end form roller (STK-JY)	1548
● Double acting/spring integrated/rod end form roller (STK-JY1)	1554
List of mounting bolts	1561
Selection guide	1562
⚠ Safety precautions	1564

The cylinder switches T2YH, T2YV, T3YH, and T3YV are scheduled for end of production at the end of December 2023.

Stopper cylinder STK Series

Variation	Model No. JIS symbol	Bore size (mm)	Standard stroke (mm)		
			10	15	
Double acting/ round rod end form	STK 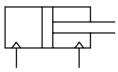	ø20 equivalent/ø32 equivalent	●	●	
		ø40 equivalent/ø50 equivalent			
Single acting/pull round rod end form	STK-Y	ø20 equivalent/ø32 equivalent	●	●	
		ø40 equivalent/ø50 equivalent			
Double acting/spring integrated round rod end form	STK-Y1	ø20 equivalent/ø32 equivalent	●	●	
		ø40 equivalent/ø50 equivalent			
Double acting/ rod end form chamfered type	STK-M 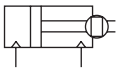	ø20 equivalent/ø32 equivalent	●	●	
		ø40 equivalent/ø50 equivalent			
Single acting/pull rod end form chamfered type	STK-MY	ø20 equivalent/ø32 equivalent	●	●	
		ø40 equivalent/ø50 equivalent			
Double acting/spring integrated rod end form chamfered type	STK-MY1	ø20 equivalent/ø32 equivalent	●	●	
		ø40 equivalent/ø50 equivalent			
Single acting/pull rod end form roller	STK-JY	ø20 equivalent/ø32 equivalent	●	●	
		ø40 equivalent/ø50 equivalent			
Double acting/spring integrated rod end form roller	STK-JY1	ø20 equivalent/ø32 equivalent	●	●	
		ø40 equivalent/ø50 equivalent			

●: Standard ◎: Option ▒: Not available

Standard stroke (mm)				Min. stroke (mm)	Max. stroke (mm)	Option	Switch	Page
						With rod end female thread		
	20	25	30			N11		
	●			10	20	◎	◎	1512
	●	●	●	20	30	◎		
	●			10	20	◎	◎	1518
	●	●	●	20	30	◎		
	●			10	20	◎	◎	1524
	●	●	●	20	30	◎		
	●			10	20	◎	◎	1530
	●	●	●	20	30	◎		
	●			10	20	◎	◎	1536
	●	●	●	20	30	◎		
	●			10	20	◎	◎	1542
	●	●	●	20	30	◎		
	●			10	20		◎	1548
	●	●	●	20	30			
	●			10	20		◎	1554
	●	●	●	20	30			

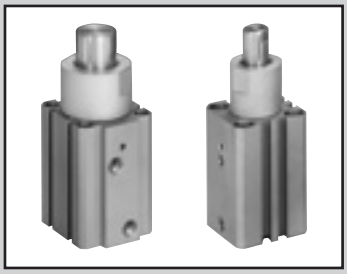

Stopper cylinder double acting/round rod end form

STK Series

● Bore size: ø20/ø32/ø40/ø50

JIS symbol

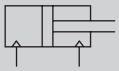

Double acting

RoHS CAD

Specifications

1 MPa = 10 bar

Item		STK			
Bore size	mm	ø20	ø32	ø40	ø50
Actuation		Double acting			
Working fluid		Compressed air			
Max. working pressure	MPa	1.0 (≈150 psi, 10 bar)			
Min. working pressure	MPa	0.15 (≈22 psi)	0.1 (≈15 psi, 1 bar)		
Proof pressure	MPa	1.6 (≈230 psi, 16 bar)			
Ambient temperature	°C	-10 (14°F) to 60 (140°F) (no freezing)			
Port size		M5	Rc1/8		Rc1/4
Stroke tolerance	mm	+2.0 0			
Working piston speed	mm/s	50 to 500			
Cushion		With rubber cushion			
Lubrication		Not required (use turbine oil class 1 ISO VG32 if necessary for lubrication)			
Rod end form		Round rod type			
Allowable absorbed energy	J	Refer to page 1562.			

Stroke

Bore size (mm)	Stroke (mm)	Max. stroke (mm)	Min. stroke (mm)	Min. stroke with switch (mm)
ø20	10, 15, 20	20	10	10
ø32				
ø40	20, 25, 30	30	20	20
ø50				

Note: Products other than standard stroke are made-to-order products.

Switch specifications

● 1-color/2-color LED

Item	2-wire proximity	2-wire proximity			3-wire proximity				2-wire reed						
	T1H/T1V	T2H/T2V/ T2JH/T2JV	T2YH/ T2YV	T2WH/ T2WV	T3H/ T3V	T3PH/ T3PV	T3YH/ T3YV	T3WH/ T3WV	T0H/T0V		T5H/T5V		T8H/T8V		
Applications	For programmable controller, relay, compact solenoid valve	Dedicated for programmable controller			For programmable controller, relay				For programmable controller, relay		For programmable controller, relay (no lamp), serial		For programmable controller, relay		
Output method	-				NPN output	PNP output	NPN output	NPN output	-						
Pwr. supp. V.	-				10 to 28 VDC				-						
Load voltage	85 to 265 VAC	10 to 30 VDC		24 VDC ±10%	30 VDC or less				12/24 VDC	100/110 VAC	5/12/24 VDC	100/110 VAC	12/24 VDC	110 VAC	220 VAC
Load current	5 to 100 mA	5 to 20 mA (*3)			100 mA or less		50 mA or less		5 to 50 mA	7 to 20 mA	50 mA or less	20 mA or less	5 to 50 mA	7 to 20 mA	7 to 10 mA
Indicator	LED (Lit when ON)	LED (Lit when ON)	Red/green LED (Lit when ON)	Red/green LED (Lit when ON)	LED (Lit when ON)	Yellow LED (Lit when ON)	Red/green LED (Lit when ON)	Red/green LED (Lit when ON)	LED (Lit when ON)		No indicator lamp		LED (Lit when ON)		
Leakage current	≤ 1 mA at 100 VAC, ≤ 2 mA at 200 VAC	1 mA or less			10 μA or less				0 mA						
Weight g	1 m:33 3 m:87 5 m:142	1 m:18 3 m:49 5 m:80	1 m:33 3 m:87 5 m:142	1 m:18 3 m:49 5 m:80	1 m:18 3 m:49 5 m:80		1 m:33 3 m:87 5 m:142	1 m:18 3 m:49 5 m:80	1 m:18 3 m:49 5 m:80				1 m:33 3 m:87 5 m:142		

*1 : Refer to Ending Page 1 for detailed switch specifications and dimensions.
*2 : Switches other than the above models, such as switches with connectors, are also available. Refer to Ending Page 1.
*3 : The max. load current is 20 mA at 25°C. The current is lower than 20 mA if the operating ambient temperature around the switch is higher than 25˚C. (5 to 10 mA at 60°C)

Cylinder weight table

(Unit: g)

Stroke / Bore size	10	15	20	25	30	Switch weight (Grommet)
ø20	214	229	243	-	-	Refer to the weight in the switch specifications.
ø32	438	463	488	-	-	
ø40	-	-	793	834	875	
ø50	-	-	1285	1311	1337	

Theoretical thrust table

(Unit: N)

Bore size (mm)	Operating direction	Working pressure MPa										
		0.1	0.15	0.2	0.3	0.4	0.5	0.6	0.7	0.8	0.9	1.0
ø20	Push	-	-	62.8	94.2	$1.26x10^2$	$1.57x10^2$	$1.88x10^2$	$2.20x10^2$	$2.51x10^2$	$2.83x10^2$	$3.14x10^2$
	Pull	-	-	40.2	60.3	80.4	$1.01x10^2$	$1.21x10^2$	$1.41x10^2$	$1.61x10^2$	$1.81x10^2$	$2.01x10^2$
ø32	Push	80.4	$1.21x10^2$	$1.61x10^2$	$2.41x10^2$	$3.22x10^2$	$4.02x10^2$	$4.83x10^2$	$5.63x10^2$	$6.43x10^2$	$7.24x10^2$	$8.04x10^2$
	Pull	49.0	73.5	98.0	$1.47x10^2$	$1.96x10^2$	$2.45x10^2$	$2.94x10^2$	$3.43x10^2$	$3.92x10^2$	$4.41x10^2$	$4.90x10^2$
ø40	Push	$1.26x10^2$	$1.88x10^2$	$2.51x10^2$	$3.77x10^2$	$5.03x10^2$	$6.28x10^2$	$7.54x10^2$	$8.80x10^2$	$1.01x10^3$	$1.13x10^3$	$1.26x10^3$
	Pull	76.6	$1.15x10^2$	$1.53x10^2$	$2.30x10^2$	$3.06x10^2$	$3.83x10^2$	$4.59x10^2$	$5.36x10^2$	$6.13x10^2$	$6.89x10^2$	$7.66x10^2$
ø50	Push	$1.96x10^2$	$2.95x10^2$	$3.93x10^2$	$5.89x10^2$	$7.85x10^2$	$9.82x10^2$	$1.18x10^3$	$1.37x10^3$	$1.57x10^3$	$1.77x10^3$	$1.96x10^3$
	Pull	$1.26x10^2$	$1.88x10^2$	$2.51x10^2$	$3.77x10^2$	$5.03x10^2$	$6.28x10^2$	$7.54x10^2$	$8.80x10^2$	$1.01x10^3$	$1.13x10^3$	$1.26x10^3$

SCP*3
CMK2
CMA2
SCM
SCG
SCA2
SCS2
CKV2
CAV2/COVP/N2
SSD2
SSG
SSD
CAT
MDC2
MVC
SMG
MSD/MSDG
FC*
STK
SRL3
SRG3
SRM3
SRT3
MRL2
MRG2
SM-25
ShkAbs
FJ
FK
Spd Contr
Ending

How to order

No switch (built-in magnet for switch)

STK - 20 ( ) - 10 ——— N11

With switch (built-in magnet for switch)

STK - 20 ( ) - 10 - T0H - R - N11

Ⓐ Bore size

Ⓑ Port thread

Ⓒ Stroke

Ⓓ Switch model No.
*1
*2

Ⓔ Switch quantity

Ⓕ Option

Code	Description
Ⓐ Bore size (mm)	
20	ø20
32	ø32
40	ø40
50	ø50

Ⓑ Port thread	
Blank	Rc thread
NN	NPT thread (ø32 and over) (made-to-order product)
GN	G thread (ø32 and over) (made-to-order product)

Ⓒ Stroke (mm)

Bore size		ø20	ø32	ø40	ø50
10	10	●	●		
15	15	●	●		
20	20	●	●	●	●
25	25			●	●
30	30			●	●

Ⓓ Switch model No.

Axial lead wire	Radial lead wire	Contact	Voltage AC	Voltage DC	Indicator	Lead wire
T0H*	**T0V***	Reed	●	●	1-color LED	2-wire
T5H*	**T5V***	Reed	●	●	No indicator lamp	2-wire
T8H*	**T8V***	Reed	●	●	1-color LED	2-wire
T1H*	**T1V***	Proximity	●		1-color LED	2-wire
T2H*	**T2V***	Proximity		●	1-color LED	2-wire
T3H*	**T3V***	Proximity		●	1-color LED	3-wire
T3PH*	**T3PV***	Proximity		●	1-color LED	3-wire
T2WH*	**T2WV***	Proximity		●	2-color LED	2-wire
T2YH*	**T2YV***	Proximity		●	2-color LED	2-wire
T3WH*	**T3WV***	Proximity		●	2-color LED	3-wire
T3YH*	**T3YV***	Proximity		●	2-color LED	3-wire
T2JH*	**T2JV***	Proximity		●	1-color LED off-delay	2-wire

*** Lead wire length (m)**	
Blank	1 m (standard)
3	3 m (option)
5	5 m (option)

Ⓔ Switch quantity	
R	1 on rod side
H	1 on head side
D	2

Ⓕ Option	
Blank	Rod end no thread
N11	With rod end female thread

⚠ Precautions for model No. selection

*1 : Switches other than Ⓓ Switch model No. are also available. (Made to order) Refer to Ending Page 1 for details.
*2 : Switches are shipped with the product. Contact CKD if assembling before shipment is necessary.

[Example of model No.]

STK-20-10-T0H-R-N11

Model: Stopper cylinder double acting/round rod end form

Ⓐ Bore size : ø20 mm
Ⓑ Port thread : Rc thread
Ⓒ Stroke : 10 mm
Ⓓ Switch model No. : Reed T0H switch, lead wire 1m
Ⓔ Switch quantity : 1 on rod side
Ⓕ Option : With rod end female thread

How to order switch

SW - T0H

Switch model No.
(Item Ⓓ above)

Specifications for rechargeable battery

(Catalog No. CC-1226A)

● Design compatible with rechargeable battery manufacturing process

STK ····· P4*

Internal structure and parts list

● STK-20

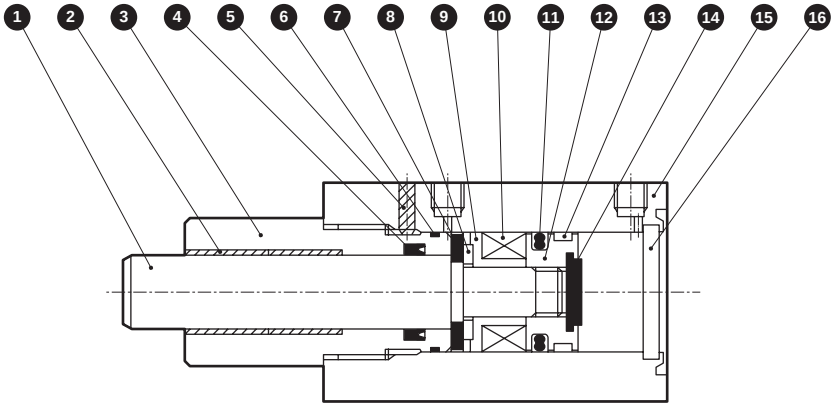

● STK-32/40/50

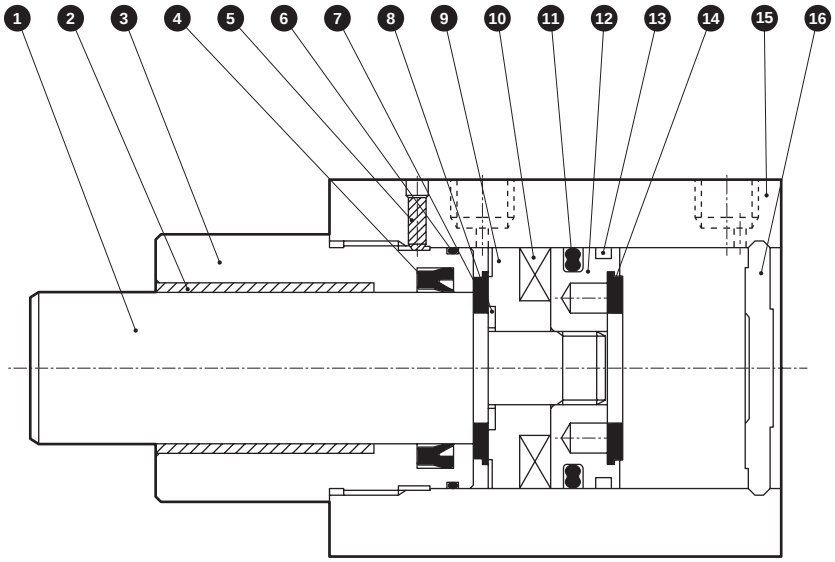

No.	Part name	Material	Remarks	No.	Part name	Material	Remarks
1	Piston rod	ø20: Stainless steel ø32 to ø50: Steel	Industrial chrome plating	9	Spacer	Polyamide	
				10	Magnet	Plastic	
2	Bush	Dry bearing		11	Piston packing	Nitrile rubber	
3	Rod cover	Aluminum alloy	Alumite	12	Piston	Aluminum alloy	Chromate
4	Rod packing	Nitrile rubber		13	Wear ring	Acetal resin	
5	Hexagon socket set screw	Steel	Black finish	14	Cushion rubber H	Urethane rubber	
6	Metal gasket	Nitrile rubber		15	Body	Aluminum alloy	Hard alumite
7	Cushion rubber R	Urethane rubber		16	Cover	ø20: Stainless steel ø32 to ø50: Aluminum alloy	ø32 to 50: Chromate
8	Spacer washer	Stainless steel					

Repair parts list

Bore size (mm)	Kit No.	Repair parts No.
ø20	STK-20K	4 6 11 13 14
ø32	STK-32K	
ø40	STK-40K	
ø50	STK-50K	

SCP*3
CMK2
CMA2
SCM
SCG
SCA2
SCS2
CKV2
CAV2/ COVP/N2
SSD2
SSG
SSD
CAT
MDC2
MVC
SMG
MSD/ MSDG
FC*
STK
SRL3
SRG3
SRM3
SRT3
MRL2
MRG2
SM-25
ShkAbs
FJ
FK
Spd Contr
Ending

Dimensions

● STK-20

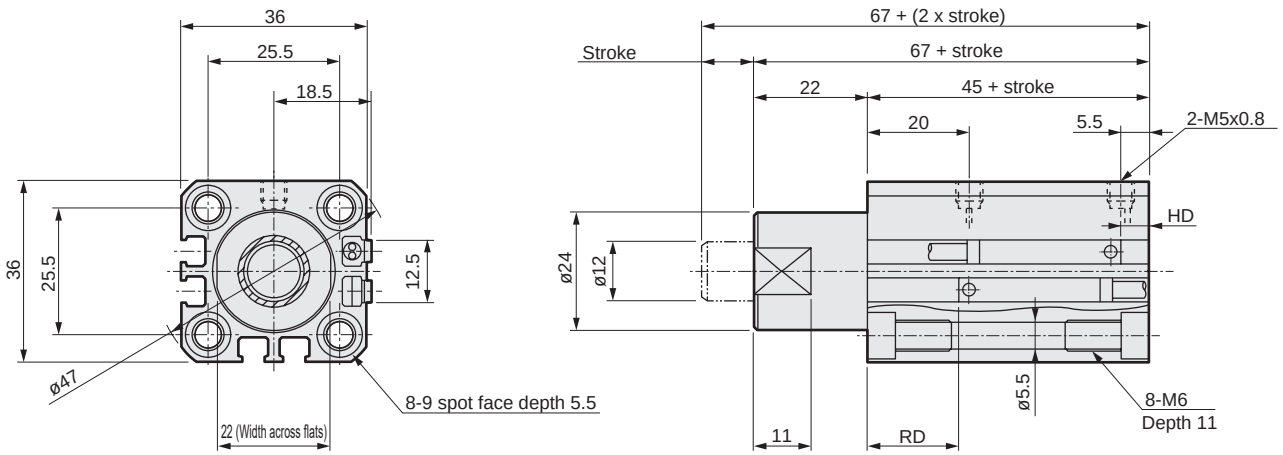

● STK-20-N11 (Dimensions other than displayed dimensions are the same as those of the above (STK-20).)

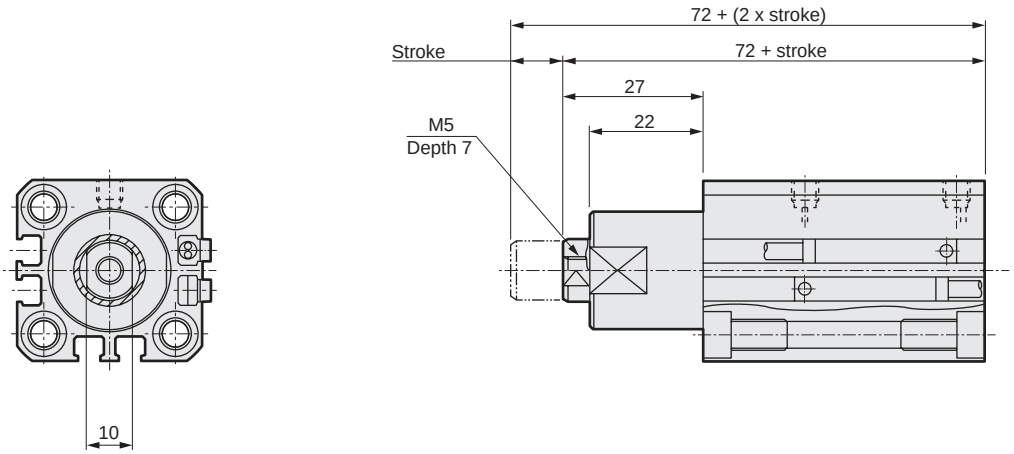

Dimensions with switch

Bore size	Reed T0H/T0V/T5H/T5V		Proximity T2H/T2V/T3H/T3V		Proximity T2WH/T2WV/T3WH/T3WV	
	HD	RD	HD	RD	HD	RD
ø20	5.5	21	5.5	21	7.0	22.5

Note: Refer to page 1559 for HD, RD and protruding dimensions of the 2-color LED, off-delay, T1* and T8* switches.

Dimensions

● STK-32/40/50

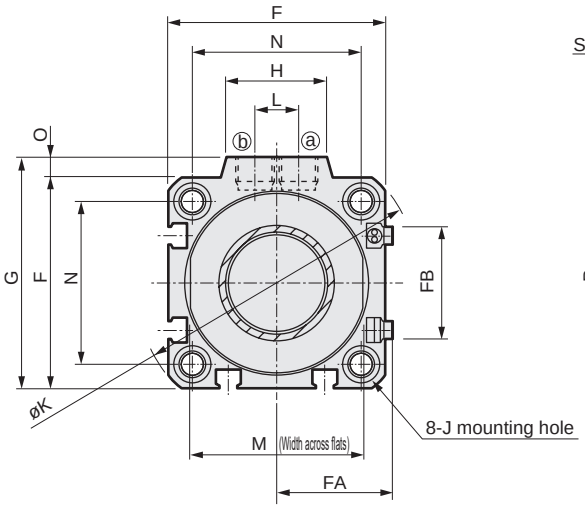

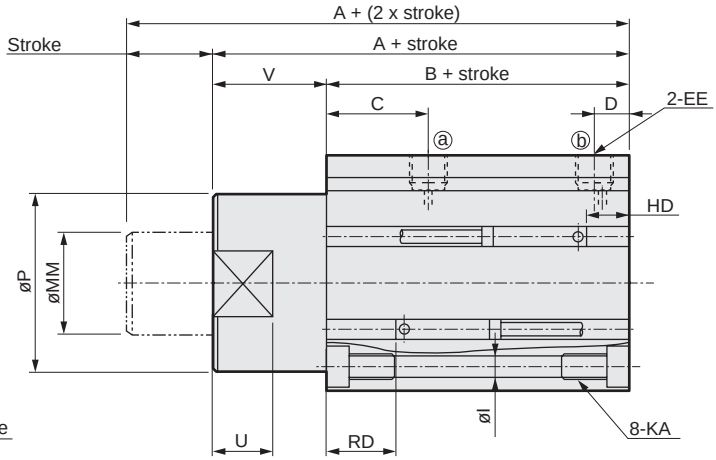

● STK-32/40/50-N11 (Dimensions other than displayed dimensions are the same as those of the above (STK-32/40/50).)

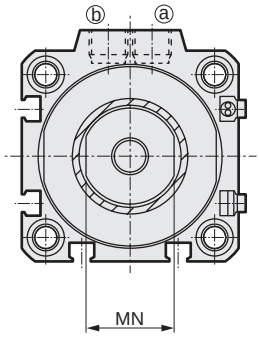

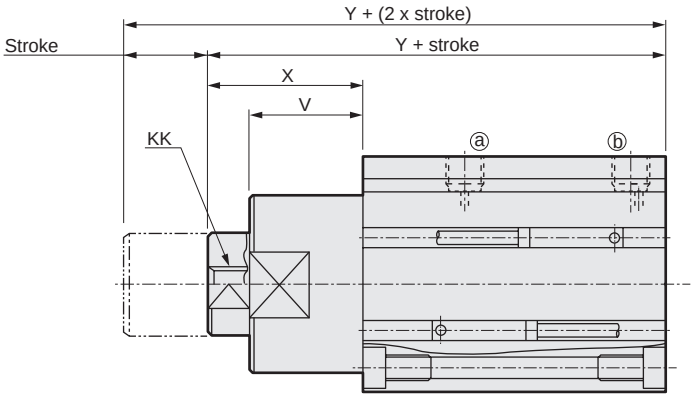

Code / Bore size	A	B	C	D	EE	F	FA	FB	G	H	I	J	K	KA	KK	L	M	MM	MN	N	O	P	U	V	X	Y
ø32	68	48	20	8	Rc1/8	45	23	20.5	49.5	24	5.5	9 spot face depth 5.5	60	M6 depth 11	M8 depth 13	10	32	20	17	34	4.5	36	13	20	30	78
ø40	80.5	52.5	24.5	8.5	Rc1/8	52	26.5	27.5	57	24	5.5	9 spot face depth 5.5	69	M6 depth 11	M8 depth 13	10	41	25	22	40	5	44	15	28	38	90.5
ø50	82	54	24.5	10.5	Rc1/4	64	32.5	28.5	71	33	6.9	11 spot face depth 6.5	86	M8 depth 13	M10 depth 15	15	50	30	27	50	7	56	15	28	43	97

Dimensions with switch

Bore size	Reed T0H/T0V/T5H/T5V		Proximity T2H/T2V/T3H/T3V		Proximity T2WH/T2WV/T3WH/T3WV	
	HD	RD	HD	RD	HD	RD
ø32	9.5	21	9	21	10.5	22.5
ø40	10.5	24	10.5	24	12	25.5
ø50	11.5	24	11.5	24	13	25.5

Note: Refer to page 1559 for HD, RD and protruding dimensions of the 2-color LED, off-delay, T1* and T8* switches.

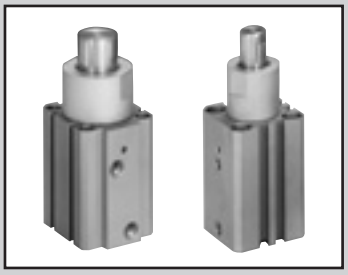

Stopper cylinder single acting/pull, round rod end form

STK-Y Series

● Bore size: ø20/ø32/ø40/ø50

JIS symbol

Single acting/pull

Specifications

1 MPa = 10 bar

Item		STK-Y			
Bore size	mm	ø20	ø32	ø40	ø50
Actuation		Single acting pull			
Working fluid		Compressed air			
Max. working pressure	MPa	1.0 (≈150 psi, 10 bar)			
Min. working pressure	MPa	0.22 (≈32 psi)	0.12 (≈17 psi, 1.2 bar)		
Proof pressure	MPa	1.6 (≈230 psi, 16 bar)			
Ambient temperature	°C	-10 (14°F) to 60 (140°F) (no freezing)			
Port size		M5	Rc1/8		Rc1/4
Stroke tolerance	mm	+2.0 0			
Working piston speed	mm/s	50 to 500			
Cushion		With rubber cushion			
Lubrication		Not required (use turbine oil class 1 ISO VG32 if necessary for lubrication)			
Rod end form		Round rod type			
Allowable absorbed energy	J	Refer to page 1562.			

Stroke

Bore size (mm)	Stroke (mm)	Max. stroke (mm)	Min. stroke (mm)	Min. stroke with switch (mm)
ø20	10, 15, 20	20	10	10
ø32				
ø40	20, 25, 30	30	20	20
ø50				

Note: Products other than standard stroke are made-to-order products.

Spring load

(Unit: N)

Bore size (mm)	Stroke (mm)	When stroke = 0	At full stroke operation
ø20	10	11.5	14.7
	15	9.9	
	20	8.2	
ø32	10	24.5	31.4
	15	21.1	
	20	17.6	
ø40	20	29.0	44.4
	25	25.3	
	30	21.5	
ø50	20	55.4	84.8
	25	48.0	
	30	40.7	

Switch specifications

● 1-color/2-color LED

Item	2-wire proximity	2-wire proximity			3-wire proximity				2-wire reed						
	T1H/T1V	T2H/T2V/ T2JH/T2JV	T2YH/ T2YV	T2WH/ T2WV	T3H/ T3V	T3PH/ T3PV	T3YH/ T3YV	T3WH/ T3WV	T0H/T0V		T5H/T5V		T8H/T8V		
Applications	For programmable controller, relay, compact solenoid valve	Dedicated for programmable controller			For programmable controller, relay				For programmable controller, relay		For programmable controller, relay (no lamp), serial		For programmable controller, relay		
Output method	-				NPN output	PNP output	NPN output	NPN output	-						
Pwr. supp. V.	-				10 to 28 VDC				-						
Load voltage	85 to 265 VAC	10 to 30 VDC		24 VDC ±10%	30 VDC or less				12/24 VDC	100/110 VAC	5/12/24 VDC	100/110 VAC	12/24 VDC	110 VAC	220 VAC
Load current	5 to 100 mA	5 to 20 mA (*3)			100 mA or less		50 mA or less		5 to 50 mA	7 to 20 mA	50 mA or less	20 mA or less	5 to 50 mA	7 to 20 mA	7 to 10 mA
Indicator	LED (Lit when ON)	LED (Lit when ON)	Red/green LED (Lit when ON)	Red/green LED (Lit when ON)	LED (Lit when ON)	Yellow LED (Lit when ON)	Red/green LED (Lit when ON)	Red/green LED (Lit when ON)	LED (Lit when ON)		No indicator lamp		LED (Lit when ON)		
Leakage current	≤ 1 mA at 100 VAC, ≤ 2 mA at 200 VAC	1 mA or less			10 μA or less				0 mA						
Weight g	1 m:33 3 m:87 5 m:142	1 m:18 3 m:49 5 m:80	1 m:33 3 m:87 5 m:142	1 m:18 3 m:49 5 m:80	1 m:18 3 m:49 5 m:80		1 m:33 3 m:87 5 m:142	1 m:18 3 m:49 5 m:80	1 m:18 3 m:49 5 m:80				1 m:33 3 m:87 5 m:142		

*1 : Refer to Ending Page 1 for detailed switch specifications and dimensions.
*2 : Switches other than the above models, such as switches with connectors, are also available. Refer to Ending Page 1.
*3 : The max. load current is 20 mA at 25°C. The current is lower than 20 mA if the operating ambient temperature around the switch is higher than 25˚C. (5 to 10 mA at 60°C)

Cylinder weight table

(Unit: g)

Stroke / Bore size	10	15	20	25	30	Switch weight (Grommet)
ø20	217	232	246	-	-	Refer to the weight in the switch specifications.
ø32	454	479	504	-	-	
ø40	-	-	809	850	891	
ø50	-	-	1299	1325	1351	

Theoretical thrust table

(Unit: N)

Bore size (mm)	Working pressure MPa								
	0.2	0.3	0.4	0.5	0.6	0.7	0.8	0.9	1.0
ø20	-	45.6	65.7	85.8	1.06×10^2	1.26×10^2	1.46×10^2	1.66×10^2	1.86×10^2
ø32	66.6	1.16×10^2	1.65×10^2	2.14×10^2	2.63×10^2	3.12×10^2	3.61×10^2	4.10×10^2	4.59×10^2
ø40	1.09×10^2	1.85×10^2	2.62×10^2	3.38×10^2	4.15×10^2	4.92×10^2	5.68×10^2	6.45×10^2	7.21×10^2
ø50	1.67×10^2	2.92×10^2	4.18×10^2	5.44×10^2	6.69×10^2	7.95×10^2	9.21×10^2	1.05×10^3	1.17×10^3

SCP*3
CMK2
CMA2
SCM
SCG
SCA2
SCS2
CKV2
CAV2/COVP/N2
SSD2
SSG
SSD
CAT
MDC2
MVC
SMG
MSD/MSDG
FC*
STK
SRL3
SRG3
SRM3
SRT3
MRL2
MRG2
SM-25
ShkAbs
FJ
FK
Spd Contr
Ending

How to order

No switch (built-in magnet for switch)

STK-Y - 20 ◯ - 10 ——— N11

With switch (built-in magnet for switch)

STK-Y - 20 ◯ - 10 - T0H - R - N11

Ⓐ Bore size

Ⓑ Port thread

Ⓒ Stroke

Ⓓ Switch model No. *1 *2

Ⓔ Switch quantity

Ⓕ Option

Code	Description
Ⓐ Bore size (mm)	
20	ø20
32	ø32
40	ø40
50	ø50

Ⓑ Port thread	
Blank	Rc thread
NN	NPT thread (ø32 and over) (made-to-order product)
GN	G thread (ø32 and over) (made-to-order product)

Ⓒ Stroke

Bore size		ø20	ø32	ø40	ø50
10	10	●	●		
15	15	●	●		
20	20	●	●	●	●
25	25			●	●
30	30			●	●

Ⓓ Switch model No.

Axial lead wire	Radial lead wire	Contact	Voltage AC	Voltage DC	Indicator	Lead wire
T0H*	**T0V***	Reed	●	●	1-color LED	2-wire
T5H*	**T5V***	Reed	●	●	No indicator lamp	2-wire
T8H*	**T8V***	Reed	●	●	1-color LED	2-wire
T1H*	**T1V***	Proximity	●		1-color LED	2-wire
T2H*	**T2V***	Proximity		●	1-color LED	2-wire
T3H*	**T3V***	Proximity		●	1-color LED	3-wire
T3PH*	**T3PV***	Proximity		●	1-color LED	3-wire
T2WH*	**T2WV***	Proximity		●	2-color LED	2-wire
T2YH*	**T2YV***	Proximity		●	2-color LED	2-wire
T3WH*	**T3WV***	Proximity		●	2-color LED	3-wire
T3YH*	**T3YV***	Proximity		●	2-color LED	3-wire
T2JH*	**T2JV***	Proximity		●	1-color LED off-delay	2-wire

*** Lead wire length (m)**	
Blank	1 m (standard)
3	3 m (option)
5	5 m (option)

Ⓔ Switch quantity	
R	1 on rod side
H	1 on head side
D	2

Ⓕ Option	
Blank	Rod end no thread
N11	With rod end female thread

⚠ Precautions for model No. selection

*1 : Switches other than Ⓓ Switch model No. are also available. (Made to order) Refer to Ending Page 1 for details.

*2 : Switches are shipped with the product. Contact CKD if assembling before shipment is necessary.

[Example of model No.]

STK-Y-20-10-T0H-R-N11

Model: Stopper cylinder single acting/pull, round rod end form

Ⓐ Bore size : ø20 mm
Ⓑ Port thread : Rc thread
Ⓒ Stroke : 10 mm
Ⓓ Switch model No. : Reed T0H switch, Lead wire 1m
Ⓔ Switch quantity : 1 on rod side
Ⓕ Option : With rod end female thread

How to order switch

SW - T0H

Switch model No. (Item Ⓓ above)

Internal structure and parts list

● STK-Y-20

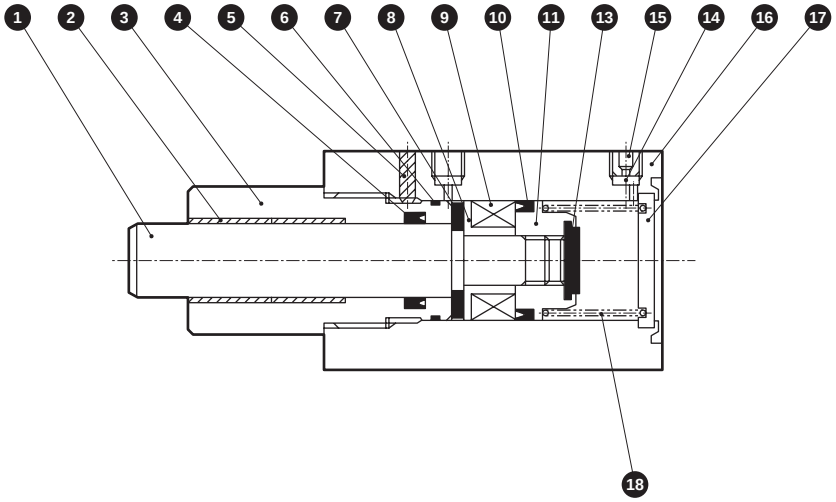

● STK-Y-32/40/50

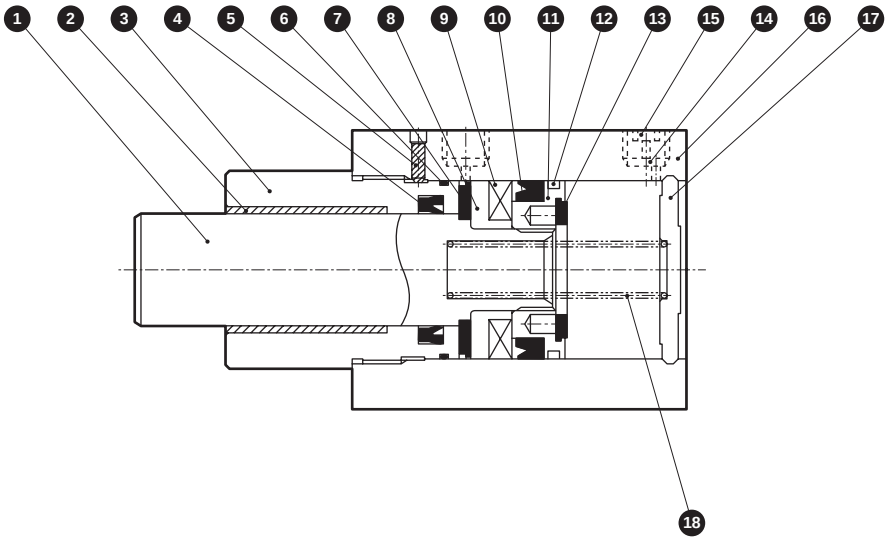

No.	Part name	Material	Remarks	No.	Part name	Material	Remarks
1	Piston rod	ø20: Stainless steel ø32 to ø50: Steel	Industrial chrome plating	10	Piston packing	Nitrile rubber	
				11	Piston	Aluminum alloy	Chromate
2	Bush	Dry bearing		12	Wear ring	Acetal resin	
3	Rod cover	Aluminum alloy	Alumite	13	Cushion rubber H	Urethane rubber	
4	Rod packing	Nitrile rubber		14	Stainless steel wire mesh	Stainless steel	
5	Hexagon socket set screw	Steel	Black finish	15	Plug	Stainless steel	
6	Metal gasket	Nitrile rubber		16	Body	Aluminum alloy	Hard alumite
7	Cushion rubber R	Urethane rubber		17	Cover	ø20: Steel ø32 to 50: Aluminum alloy	ø20: Galvanizing ø32 to 50: Chromate
8	Spacer	Aluminum alloy	Chromate				
9	Magnet	Plastic		18	Coil spring	Steel	Electrodeposition

Repair parts list

Bore size (mm)	Kit No.	Repair parts No.
ø20	STK-Y-20K	4 6 10 12 13
ø32	STK-Y-32K	
ø40	STK-Y-40K	
ø50	STK-Y-50K	

SCP*3
CMK2
CMA2
SCM
SCG
SCA2
SCS2
CKV2
CAV2/ COVP/N2
SSD2
SSG
SSD
CAT
MDC2
MVC
SMG
MSD/ MSDG
FC*
STK
SRL3
SRG3
SRM3
SRT3
MRL2
MRG2
SM-25
ShkAbs
FJ
FK
Spd Contr
Ending

Dimensions

● STK-Y-20

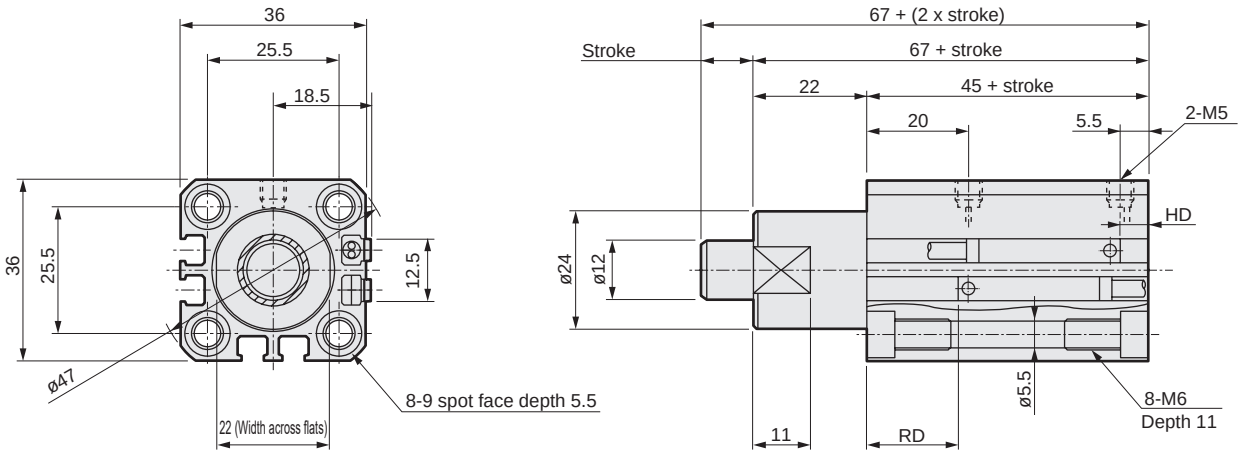

● STK-Y-20-N11 (Dimensions other than displayed dimensions are the same as those of the above (STK-Y-20).)

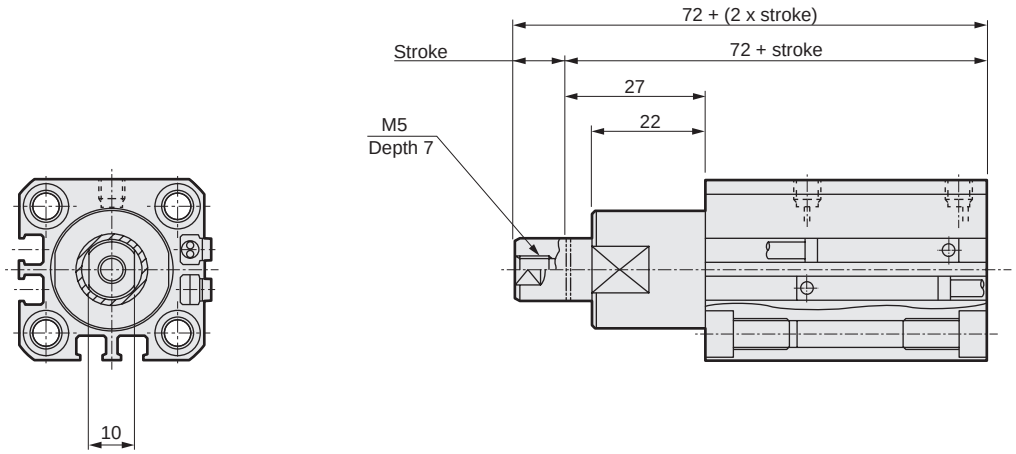

Dimensions with switch

Bore size	Reed T0H/T0V/T5H/T5V		Proximity T2H/T2V/T3H/T3V		Proximity T2WH/T2WV/T3WH/T3WV	
	HD	RD	HD	RD	HD	RD
ø20	7	19.5	7	19.5	8.5	21

Note: Refer to page 1560 for HD, RD and protruding dimensions of the 2-color LED, off-delay, T1* and T8* switches.

Dimensions

● STK-Y-32/40/50

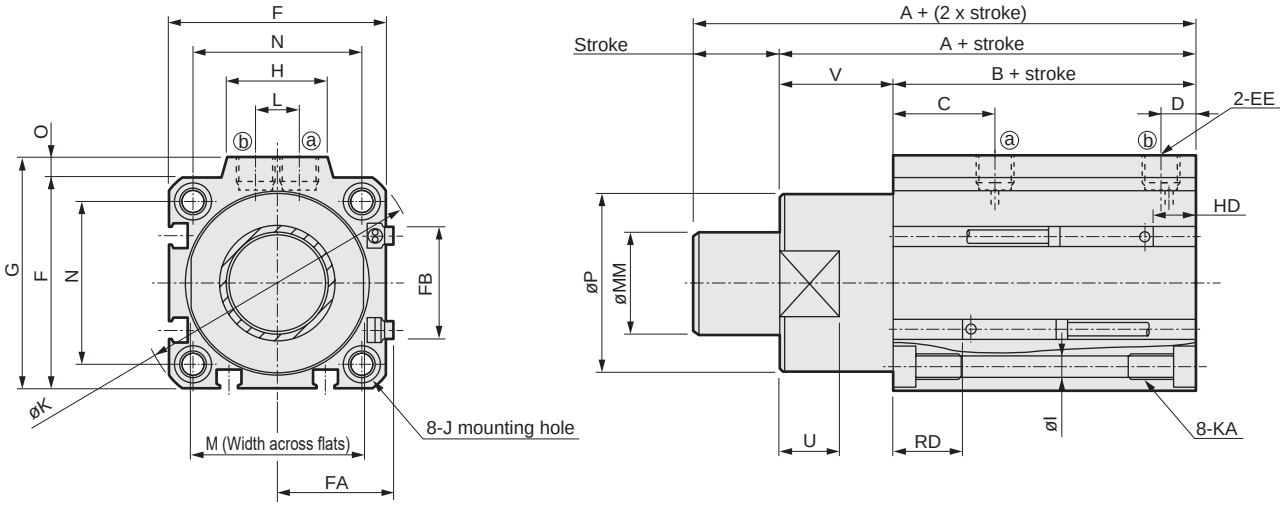

● STK-Y-32/40/50-N11 (Dimensions other than displayed dimensions are the same as those of the above (STK-Y-32/40/50).)

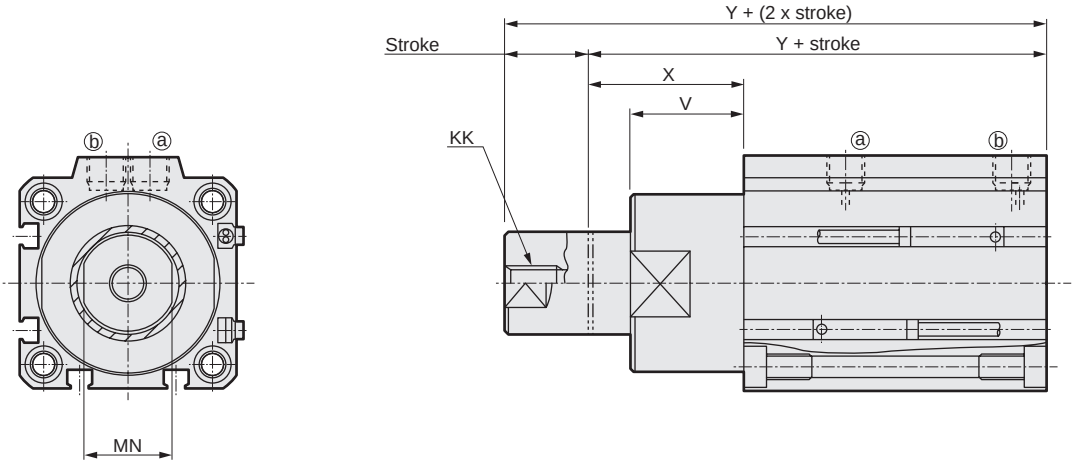

Code / Bore size	A	B	C	D	EE	F	FA	FB	G	H	I	J	K	KA	KK	L	M	MM	MN	N	O	P	U	V	X	Y
ø32	68	48	20	8	Rc1/8	45	23	20.5	49.5	24	5.5	9 spot face depth 5.5	60	M6 depth 11	M8 depth 13	10	32	20	17	34	4.5	36	13	20	30	78
ø40	80.5	52.5	24.5	8.5	Rc1/8	52	26.5	27.5	57	24	5.5	9 spot face depth 5.5	69	M6 depth 11	M8 depth 13	10	41	25	22	40	5	44	15	28	38	90.5
ø50	82	54	24.5	10.5	Rc1/4	64	32.5	28.5	71	33	6.9	11 spot face depth 6.5	86	M8 depth 13	M10 depth 15	15	50	30	27	50	7	56	15	28	43	97

Dimensions with switch

Bore size	Reed T0H/T0V/T5H/T5V		Proximity T2H/T2V/T3H/T3V		Proximity T2WH/T2WV/T3WH/T3WV	
	HD	RD	HD	RD	HD	RD
ø32	10.5	20	10.5	20	12	21.5
ø40	11.5	23	11.5	23	13	24.5
ø50	12.5	23	12.5	23	14	24.5

Note: Refer to page 1560 for HD, RD and protruding dimensions of the 2-color LED, off-delay, T1* and T8* switches.

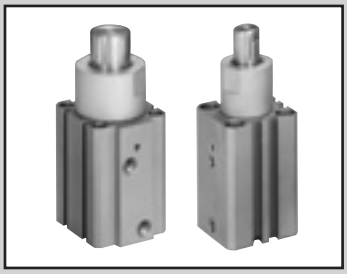

Stopper cylinder double acting/spring integrated/round rod end form

STK-Y1 Series

● Bore size: ø20/ø32/ø40/ø50

JIS symbol

Double acting/spring integrated

RoHS CAD

Specifications

1 MPa = 10 bar

Item		STK-Y1			
Bore size	mm	ø20	ø32	ø40	ø50
Actuation		Double acting/spring integrated			
Working fluid		Compressed air			
Max. working pressure	MPa	1.0 (≈150 psi, 10 bar)			
Min. working pressure	MPa	0.22 (≈32 psi)	0.12 (≈17 psi, 1.2 bar)		
Proof pressure	MPa	1.6 (≈230 psi, 16 bar)			
Ambient temperature	°C	-10 (14°F) to 60 (140°F) (no freezing)			
Port size		M5	Rc1/8		Rc1/4
Stroke tolerance	mm	+2.0 0			
Working piston speed	mm/s	50 to 500			
Cushion		With rubber cushion			
Lubrication		Not required (use turbine oil class 1 ISO VG32 if necessary for lubrication)			
Rod end form		Round rod type			
Allowable absorbed energy	J	Refer to page 1562.			

Stroke

Bore size (mm)	Stroke (mm)	Max. stroke (mm)	Min. stroke (mm)	Min. stroke with switch (mm)
ø20	10, 15, 20	20	10	10
ø32				
ø40	20, 25, 30	30	20	20
ø50				

Note: Products other than standard stroke are made-to-order products.

Spring load

(Unit: N)

Bore size (mm)	Stroke (mm)	When stroke = 0	At full stroke operation
ø20	10	11.5	14.7
	15	9.9	
	20	8.2	
ø32	10	24.5	31.4
	15	21.1	
	20	17.6	
ø40	20	29.0	44.4
	25	25.3	
	30	21.5	
ø50	20	55.4	84.8
	25	48.0	
	30	40.7	

Switch specifications

● 1-color/2-color LED

Item	2-wire proximity	2-wire proximity			3-wire proximity				2-wire reed						
	T1H/T1V	T2H/T2V/ T2JH/T2JV	T2YH/ T2YV	T2WH/ T2WV	T3H/ T3V	T3PH/ T3PV	T3YH/ T3YV	T3WH/ T3WV	T0H/T0V		T5H/T5V		T8H/T8V		
Applications	For programmable controller, relay, compact solenoid valve	Dedicated for programmable controller			For programmable controller, relay				For programmable controller, relay		For programmable controller, relay (no lamp), serial		For programmable controller, relay		
Output method	-				NPN output	PNP output	NPN output	NPN output	-						
Pwr. supp. V.	-				10 to 28 VDC				-						
Load voltage	85 to 265 VAC	10 to 30 VDC		24 VDC ±10%	30 VDC or less				12/24 VDC	100/110 VAC	5/12/24 VDC	100/110 VAC	12/24 VDC	110 VAC	220 VAC
Load current	5 to 100 mA	5 to 20 mA (*3)			100 mA or less		50 mA or less		5 to 50 mA	7 to 20 mA	50 mA or less	20 mA or less	5 to 50 mA	7 to 20 mA	7 to 10 mA
Indicator	LED (Lit when ON)	LED (Lit when ON)	Red/green LED (Lit when ON)	Red/green LED (Lit when ON)	LED (Lit when ON)	Yellow LED (Lit when ON)	Red/green LED (Lit when ON)	Red/green LED (Lit when ON)	LED (Lit when ON)		No indicator lamp		LED (Lit when ON)		
Leakage current	≤ 1 mA at 100 VAC, ≤ 2 mA at 200 VAC	1 mA or less			10 μA or less				0 mA						
Weight g	1 m:33 3 m:87 5 m:142	1 m:18 3 m:49 5 m:80	1 m:33 3 m:87 5 m:142	1 m:18 3 m:49 5 m:80	1 m:18 3 m:49 5 m:80		1 m:33 3 m:87 5 m:142	1 m:18 3 m:49 5 m:80	1 m:18 3 m:49 5 m:80				1 m:33 3 m:87 5 m:142		

*1 : Refer to Ending Page 1 for detailed switch specifications and dimensions.
*2 : Switches other than the above models, such as switches with connectors, are also available. Refer to Ending Page 1.
*3 : The max. load current is 20 mA at 25°C. The current is lower than 20 mA if the operating ambient temperature around the switch is higher than 25˚C. (5 to 10 mA at 60°C)

Cylinder weight table

(Unit: g)

Stroke / Bore size	10	15	20	25	30	Switch weight (Grommet)
ø20	217	232	246	-	-	Refer to the weight in the switch specifications.
ø32	454	479	504	-	-	
ø40	-	-	809	850	891	
ø50	-	-	1299	1325	1351	

Theoretical thrust table

(Unit: N)

Bore size (mm)	Operating direction	Working pressure MPa									
		0.15	0.2	0.3	0.4	0.5	0.6	0.7	0.8	0.9	1.0
ø20	Push	-	-	94.2	$1.26x10^2$	$1.57x10^2$	$1.88x10^2$	$2.20x10^2$	$2.51x10^2$	$2.83x10^2$	$3.14x10^2$
	Pull	-	-	45.6	65.7	85.8	$1.06x10^2$	$1.26x10^2$	$1.46x10^2$	$1.66x10^2$	$1.86x10^2$
ø32	Push	$1.21x10^2$	$1.61x10^2$	$2.41x10^2$	$3.22x10^2$	$4.02x10^2$	$4.83x10^2$	$5.63x10^2$	$6.43x10^2$	$7.24x10^2$	$8.04x10^2$
	Pull	42.1	66.6	$1.16x10^2$	$1.65x10^2$	$2.14x10^2$	$2.63x10^2$	$3.12x10^2$	$3.61x10^2$	$4.10x10^2$	$4.59x10^2$
ø40	Push	$1.88x10^2$	$2.51x10^2$	$3.77x10^2$	$5.03x10^2$	$6.28x10^2$	$7.54x10^2$	$8.80x10^2$	$1.01x10^3$	$1.13x10^3$	$1.26x10^3$
	Pull	70.5	$1.09x10^2$	$1.85x10^2$	$2.62x10^2$	$3.38x10^2$	$4.15x10^2$	$4.92x10^2$	$5.68x10^2$	$6.45x10^2$	$7.21x10^2$
ø50	Push	$2.95x10^2$	$3.93x10^2$	$5.89x10^2$	$7.85x10^2$	$9.82x10^2$	$1.18x10^3$	$1.37x10^3$	$1.57x10^3$	$1.77x10^3$	$1.96x10^3$
	Pull	$1.04x10^2$	$1.67x10^2$	$2.92x10^2$	$4.18x10^2$	$5.44x10^2$	$6.69x10^2$	$7.95x10^2$	$9.21x10^2$	$1.05x10^3$	$1.17x10^3$

SCP*3
CMK2
CMA2
SCM
SCG
SCA2
SCS2
CKV2
CAV2/COVP/N2
SSD2
SSG
SSD
CAT
MDC2
MVC
SMG
MSD/MSDG
FC*
STK
SRL3
SRG3
SRM3
SRT3
MRL2
MRG2
SM-25
ShkAbs
FJ
FK
Spd Contr
Ending

How to order

No switch (built-in magnet for switch)

STK-Y1 - 20 ◯ - 10 ——— N11

With switch (built-in magnet for switch)

STK-Y1 - 20 ◯ - 10 - T0H - R - N11

Ⓐ Bore size

Ⓑ Port thread

Ⓒ Stroke

Ⓓ Switch model No.
*1
*2

Ⓔ Switch quantity

Ⓕ Option

Code	Description
Ⓐ Bore size (mm)	
20	ø20
32	ø32
40	ø40
50	ø50

Ⓑ Port thread	
Blank	Rc thread
NN	NPT thread (ø32 and over) (made-to-order product)
GN	G thread (ø32 and over) (made-to-order product)

Ⓒ Stroke (mm)

Bore size		ø20	ø32	ø40	ø50
10	10	●	●		
15	15	●	●		
20	20	●	●	●	●
25	25			●	●
30	30			●	●

Ⓓ Switch model No.

Axial lead wire	Radial lead wire	Contact	Voltage AC	Voltage DC	Indicator	Lead wire
T0H*	**T0V***	Reed	●	●	1-color LED	2-wire
T5H*	**T5V***	Reed	●	●	No indicator lamp	2-wire
T8H*	**T8V***	Reed	●	●	1-color LED	2-wire
T1H*	**T1V***	Proximity	●		1-color LED	2-wire
T2H*	**T2V***	Proximity		●	1-color LED	2-wire
T3H*	**T3V***	Proximity		●	1-color LED	3-wire
T3PH*	**T3PV***	Proximity		●	1-color LED	3-wire
T2WH*	**T2WV***	Proximity		●	2-color LED	2-wire
T2YH*	**T2YV***	Proximity		●	2-color LED	2-wire
T3WH*	**T3WV***	Proximity		●	2-color LED	3-wire
T3YH*	**T3YV***	Proximity		●	2-color LED	3-wire
T2JH*	**T2JV***	Proximity		●	1-color LED off-delay	2-wire

*** Lead wire length (m)**	
Blank	1 m (standard)
3	3 m (option)
5	5 m (option)

Ⓔ Switch quantity	
R	1 on rod side
H	1 on head side
D	2

Ⓕ Option	
Blank	Rod end no thread
N11	With rod end female thread

⚠ Precautions for model No. selection

*1 : Switches other than ⒹSwitch model No. are also available. (Made to order) Refer to Ending Page 1 for details.
*2 : Switches are shipped with the product. Contact CKD if assembling before shipment is necessary.

[Example of model No.]
STK-Y1-20-10-T0H-R-N11

Model: Stopper cylinder double acting/spring integrated, round rod end form type

Ⓐ Bore size : ø20 mm
Ⓑ Port thread : Rc thread
Ⓒ Stroke : 10 mm
Ⓓ Switch model No. : Reed T0H switch, Lead wire 1m
Ⓔ Switch quantity : 1 on rod side
Ⓕ Option : With rod end female thread

Discrete switch model No.

SW - T0H

Switch model No.
(Item Ⓓ above)

Internal structure and parts list

● STK-Y1-20

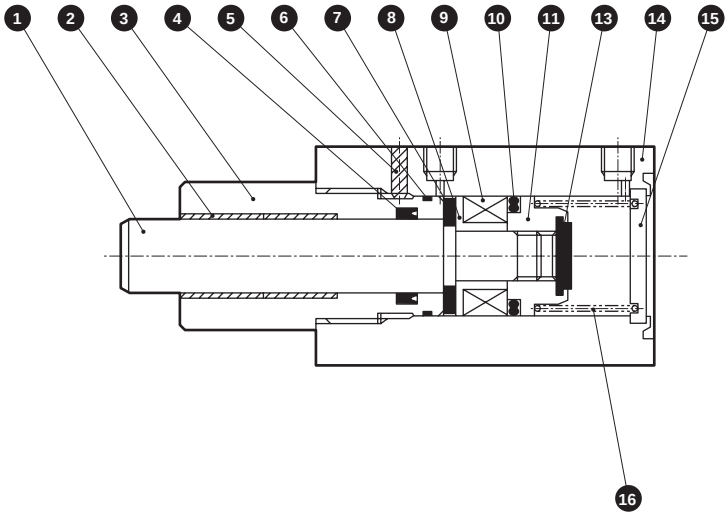

● STK-Y1-32/40/50

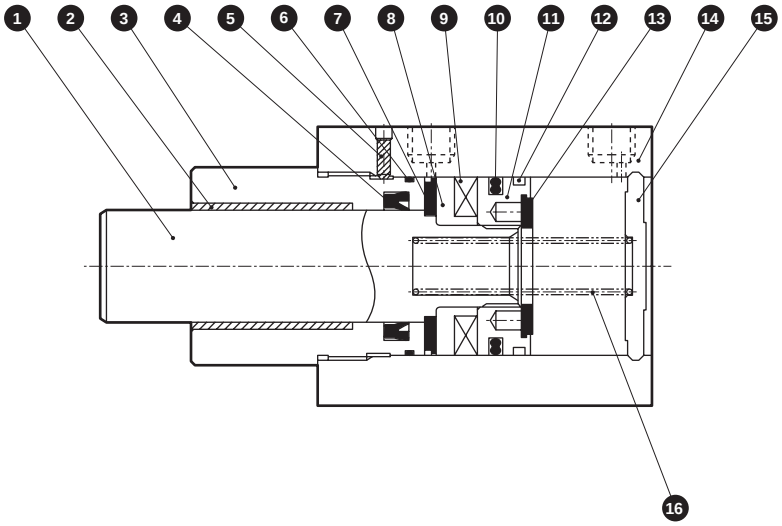

No.	Part name	Material	Remarks	No.	Part name	Material	Remarks
1	Piston rod	ø20: Stainless steel ø32 to ø50: Steel	Industrial chrome plating	9	Magnet	Plastic	
				10	Piston packing	Nitrile rubber	
2	Bush	Dry bearing		11	Piston	Aluminum alloy	Chromate
3	Rod cover	Aluminum alloy	Alumite	12	Wear ring	Acetal resin	
4	Rod packing	Nitrile rubber		13	Cushion rubber H	Urethane rubber	
5	Hexagon socket set screw	Steel	Black finish	14	Body	Aluminum alloy	Hard alumite
6	Metal gasket	Nitrile rubber		15	Cover	ø20: Steel ø32 to 50: Aluminum alloy	ø20: Galvanizing ø32 to 50: Chromate
7	Cushion rubber R	Urethane rubber					
8	Spacer	Aluminum alloy	Chromate	16	Coil spring	Steel	Electrodeposition

Repair parts list

Bore size (mm)	Kit No.	Repair parts No.
ø20	STK-Y1-20K	4 6 10 12 13
ø32	STK-Y1-32K	
ø40	STK-Y1-40K	
ø50	STK-Y1-50K	

SCP*3
CMK2
CMA2
SCM
SCG
SCA2
SCS2
CKV2
CAV2/ COVP/N2
SSD2
SSG
SSD
CAT
MDC2
MVC
SMG
MSD/ MSDG
FC*
STK
SRL3
SRG3
SRM3
SRT3
MRL2
MRG2
SM-25
ShkAbs
FJ
FK
Spd Contr
Ending

Dimensions

● STK-Y1-20

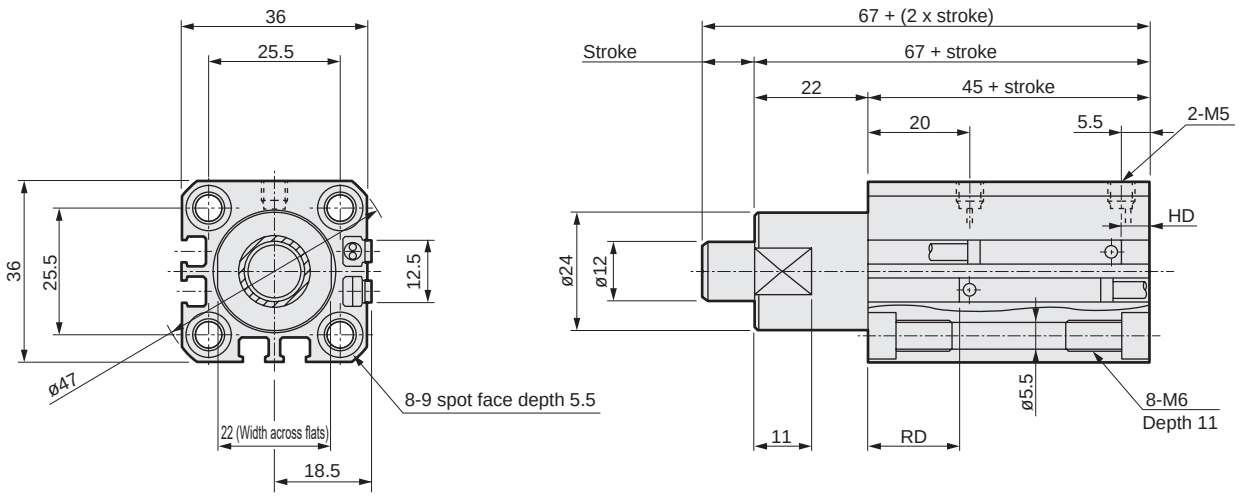

● STK-Y1-20-N11 (Dimensions other than displayed dimensions are the same as those of the above (STK-Y1-20).)

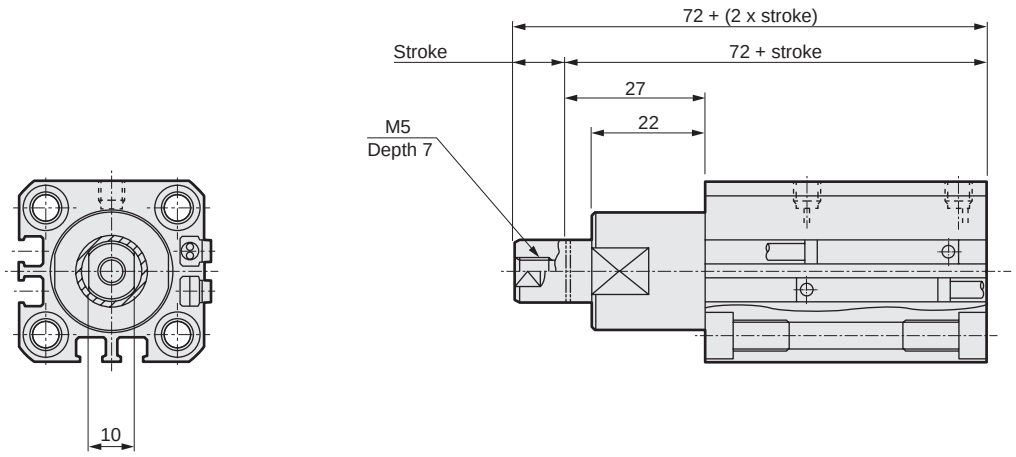

STK-Y1 Dimensions with switch

Bore size	Reed T0H/T0V/T5H/T5V		Proximity T2H/T2V/T3H/T3V		Proximity T2WH/T2WV/T3WH/T3WV	
	HD	RD	HD	RD	HD	RD
ø20	7	19.5	7	19.5	8.5	21

Note: Refer to page 1560 for HD, RD and protruding dimensions of the 2-color LED, off-delay, T1* and T8* switches.

Dimensions

● STK-Y1-32/40/50

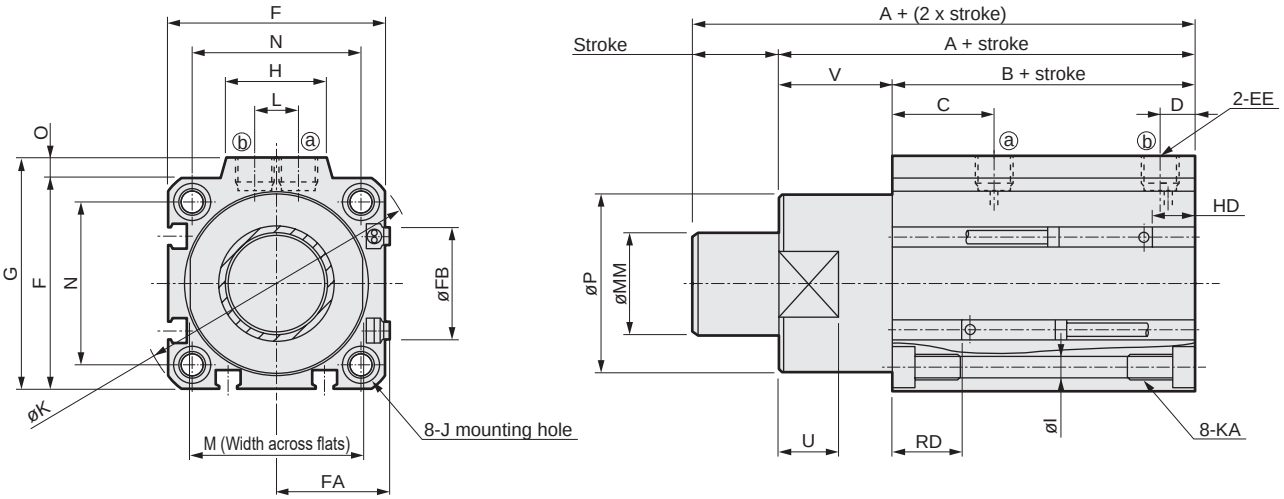

● STK-Y1-32/40/50-N11 (Dimensions other than displayed dimensions are the same as those of the above (STK-Y1-32/40/50).)

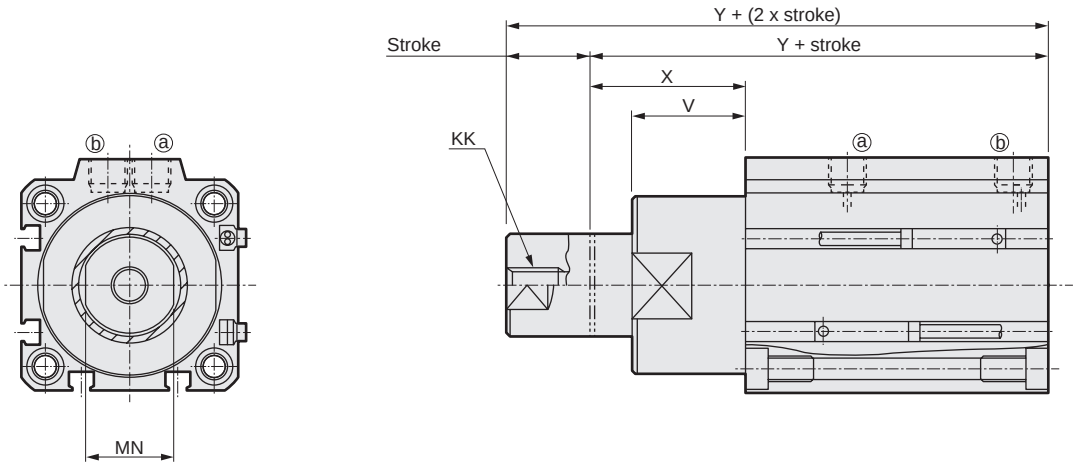

Code / Bore size	A	B	C	D	EE	F	FA	FB	G	H	I	J	K	KA	KK	L	M	MM	MN	N	O	P	U	V	X	Y
ø32	68	48	20	8	Rc1/8	45	23	20.5	49.5	24	5.5	9 spot face depth 5.5	60	M6 depth 11	M8 depth 13	10	32	20	17	34	4.5	36	13	20	30	78
ø40	80.5	52.5	24.5	8.5	Rc1/8	52	26.5	27.5	57	24	5.5	9 spot face depth 5.5	69	M6 depth 11	M8 depth 13	10	41	25	22	40	5	44	15	28	38	90.5
ø50	82	54	24.5	10.5	Rc1/4	64	32.5	28.5	71	33	6.9	11 spot face depth 6.5	86	M8 depth 13	M10 depth 15	15	50	30	27	50	7	56	15	28	43	97

Dimensions with switch

Bore size	Reed T0H/T0V/T5H/T5V		Proximity T2H/T2V/T3H/T3V		Proximity T2WH/T2WV/T3WH/T3WV	
	HD	RD	HD	RD	HD	RD
ø32	10.5	20	10.5	20	12	21.5
ø40	11.5	23	11.5	23	13	24.5
ø50	12.5	23	12.5	23	14	24.5

Note: Refer to page 1560 for HD, RD and protruding dimensions of the 2-color LED, off-delay, T1* and T8* switches.

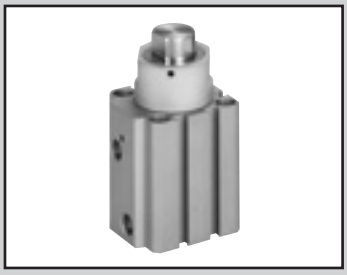

Stopper cylinder double acting/rod end form chamfered type

STK-M Series

● Bore size: ø20/ø32/ø40/ø50

JIS symbol

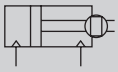

Double acting

Specifications

1 MPa = 10 bar

Item		STK-M			
Bore size	mm	ø20	ø32	ø40	ø50
Actuation		Double acting			
Working fluid		Compressed air			
Max. working pressure	MPa	1.0 (≈150 psi, 10 bar)			
Min. working pressure	MPa	0.15 (≈22 psi)	0.1 (≈15 psi, 1 bar)		
Proof pressure	MPa	1.6 (≈230 psi, 16 bar)			
Ambient temperature	°C	-10 (14°F) to 60 (140°F) (no freezing)			
Port size		M5	Rc1/8		Rc1/4
Stroke tolerance	mm	+2.0 0			
Working piston speed	mm/s	50 to 500			
Cushion		With rubber cushion			
Lubrication		Not required (use turbine oil class 1 ISO VG32 if necessary for lubrication)			
Rod end form		Chamfered type			
Allowable absorbed energy	J	Refer to page 1562.			

Stroke

Bore size (mm)	Stroke (mm)	Max. stroke (mm)	Min. stroke (mm)	Min. stroke with switch (mm)
ø20	10, 15, 20	20	10	10
ø32				
ø40	20, 25, 30	30	20	20
ø50				

Note: Products other than standard stroke are made-to-order products.

Switch specifications

● 1-color/2-color LED

Item	2-wire proximity	2-wire proximity			3-wire proximity				2-wire reed						
	T1H/T1V	T2H/T2V/ T2JH/T2JV	T2YH/ T2YV	T2WH/ T2WV	T3H/ T3V	T3PH/ T3PV	T3YH/ T3YV	T3WH/ T3WV	T0H/T0V		T5H/T5V		T8H/T8V		
Applications	For programmable controller, relay, compact solenoid valve	Dedicated for programmable controller			For programmable controller, relay				For programmable controller, relay		For programmable controller, relay (no lamp), serial		For programmable controller, relay		
Output method	-				NPN output	PNP output	NPN output	NPN output	-						
Pwr. supp. V.	-				10 to 28 VDC				-						
Load voltage	85 to 265 VAC	10 to 30 VDC		24 VDC ±10%	30 VDC or less				12/24 VDC	100/110 VAC	5/12/24 VDC	100/110 VAC	12/24 VDC	110 VAC	220 VAC
Load current	5 to 100 mA	5 to 20 mA (*3)			100 mA or less		50 mA or less		5 to 50 mA	7 to 20 mA	50 mA or less	20 mA or less	5 to 50 mA	7 to 20 mA	7 to 10 mA
Indicator	LED (Lit when ON)	LED (Lit when ON)	Red/green LED (Lit when ON)	Red/green LED (Lit when ON)	LED (Lit when ON)	Yellow LED (Lit when ON)	Red/green LED (Lit when ON)	Red/green LED (Lit when ON)	LED (Lit when ON)		No indicator lamp		LED (Lit when ON)		
Leakage current	≤ 1 mA at 100 VAC, ≤ 2 mA at 200 VAC	1 mA or less			10 μA or less				0 mA						
Weight g	1 m:33 3 m:87 5 m:142	1 m:18 3 m:49 5 m:80	1 m:33 3 m:87 5 m:142	1 m:18 3 m:49 5 m:80	1 m:18 3 m:49 5 m:80		1 m:33 3 m:87 5 m:142	1 m:18 3 m:49 5 m:80	1 m:18 3 m:49 5 m:80				1 m:33 3 m:87 5 m:142		

*1 : Refer to Ending Page 1 for detailed switch specifications and dimensions.
*2 : Switches other than the above models, such as switches with connectors, are also available. Refer to Ending Page 1.
*3 : The max. load current is 20 mA at 25°C. The current is lower than 20 mA if the operating ambient temperature around the switch is higher than 25˚C. (5 to 10 mA at 60°C)

Cylinder weight table

(Unit: g)

Stroke / Bore size	10	15	20	25	30	Switch weight (Grommet)
ø20	215	230	244	-	-	Refer to the weight in the switch specifications.
ø32	441	466	491	-	-	
ø40	-	-	796	837	878	
ø50	-	-	1288	1314	1340	

Theoretical thrust table

(Unit: N)

Bore size (mm)	Operating direction	Working pressure MPa										
		0.1	0.15	0.2	0.3	0.4	0.5	0.6	0.7	0.8	0.9	1.0
ø20	Push	-	-	62.8	94.2	$1.26x10^2$	$1.57x10^2$	$1.88x10^2$	$2.20x10^2$	$2.51x10^2$	$2.83x10^2$	$3.14x10^2$
	Pull	-	-	40.2	60.3	80.4	$1.01x10^2$	$1.21x10^2$	$1.41x10^2$	$1.61x10^2$	$1.81x10^2$	$2.01x10^2$
ø32	Push	80.4	$1.21x10^2$	$1.61x10^2$	$2.41x10^2$	$3.22x10^2$	$4.02x10^2$	$4.83x10^2$	$5.63x10^2$	$6.43x10^2$	$7.24x10^2$	$8.04x10^2$
	Pull	49.0	73.5	98.0	$1.47x10^2$	$1.96x10^2$	$2.45x10^2$	$2.94x10^2$	$3.43x10^2$	$3.92x10^2$	$4.41x10^2$	$4.90x10^2$
ø40	Push	$1.26x10^2$	$1.88x10^2$	$2.51x10^2$	$3.77x10^2$	$5.03x10^2$	$6.28x10^2$	$7.54x10^2$	$8.80x10^2$	$1.01x10^3$	$1.13x10^3$	$1.26x10^3$
	Pull	76.6	$1.15x10^2$	$1.53x10^2$	$2.30x10^2$	$3.06x10^2$	$3.83x10^2$	$4.59x10^2$	$5.36x10^2$	$6.13x10^2$	$6.89x10^2$	$7.66x10^2$
ø50	Push	$1.96x10^2$	$2.95x10^2$	$3.93x10^2$	$5.89x10^2$	$7.85x10^2$	$9.82x10^2$	$1.18x10^3$	$1.37x10^3$	$1.57x10^3$	$1.77x10^3$	$1.96x10^3$
	Pull	$1.26x10^2$	$1.88x10^2$	$2.51x10^2$	$3.77x10^2$	$5.03x10^2$	$6.28x10^2$	$7.54x10^2$	$8.80x10^2$	$1.01x10^3$	$1.13x10^3$	$1.26x10^3$

SCP*3
CMK2
CMA2
SCM
SCG
SCA2
SCS2
CKV2
CAV2/COVP/N2
SSD2
SSG
SSD
CAT
MDC2
MVC
SMG
MSD/MSDG
FC*
STK
SRL3
SRG3
SRM3
SRT3
MRL2
MRG2
SM-25
ShkAbs
FJ
FK
Spd Contr
Ending

How to order

No switch (built-in magnet for switch)

STK-M - 20 ◯ - 10 ——— N11

With switch (built-in magnet for switch)

STK-M - 20 ◯ - 10 - T0H - R - N11

Ⓐ Bore size

Ⓑ Port thread

Ⓒ Stroke

Ⓓ Switch model No. *1 *2

Ⓔ Switch quantity

Ⓕ Option

Code	Description
Ⓐ Bore size (mm)	
20	ø20
32	ø32
40	ø40
50	ø50

Ⓑ Port thread	
Blank	Rc thread
NN	NPT thread (ø32 and over) (made-to-order product)
GN	G thread (ø32 and over) (made-to-order product)

Ⓒ Stroke (mm)

Bore size		ø20	ø32	ø40	ø50
10	10	●	●		
15	15	●	●		
20	20	●	●	●	●
25	25			●	●
30	30			●	●

Ⓓ Switch model No.

Axial lead wire	Radial lead wire	Contact	Voltage AC	Voltage DC	Indicator	Lead wire
T0H*	**T0V***	Reed	●	●	1-color LED	2-wire
T5H*	**T5V***	Reed	●	●	No indicator lamp	2-wire
T8H*	**T8V***	Reed	●	●	1-color LED	2-wire
T1H*	**T1V***	Proximity	●		1-color LED	2-wire
T2H*	**T2V***	Proximity		●	1-color LED	2-wire
T3H*	**T3V***	Proximity		●	1-color LED	3-wire
T3PH*	**T3PV***	Proximity		●	1-color LED	3-wire
T2WH*	**T2WV***	Proximity		●	2-color LED	2-wire
T2YH*	**T2YV***	Proximity		●	2-color LED	2-wire
T3WH*	**T3WV***	Proximity		●	2-color LED	3-wire
T3YH*	**T3YV***	Proximity		●	2-color LED	3-wire
T2JH*	**T2JV***	Proximity		●	1-color LED off-delay	2-wire

*** Lead wire length (m)**	
Blank	1 m (standard)
3	3 m (option)
5	5 m (option)

Ⓔ Switch quantity	
R	1 on rod side
H	1 on head side
D	2

Ⓕ Option	
Blank	Rod end no thread
N11	With rod end female thread

⚠ Precautions for model No. selection

*1 : Switches other than ● Switch model No. are also available. (Made to order)
Refer to Ending Page 1 for details.

*2 : Switches are shipped with the product.
Contact CKD if assembling before shipment is necessary.

[Example of model No.]

STK-M-20-10-T0H-R-N11

Model: Stopper cylinder double acting/rod end form chamfered type

Ⓐ Bore size : ø20 mm
Ⓑ Port thread : Rc thread
Ⓒ Stroke : 10 mm
Ⓓ Switch model No. : Reed T0H switch, lead wire 1m
Ⓔ Switch quantity : 1 on rod side
Ⓕ Option : With rod end female thread

How to order switch

SW - T0H

Switch model No.
(Item Ⓓ above)

Internal structure and parts list

● STK-M-20

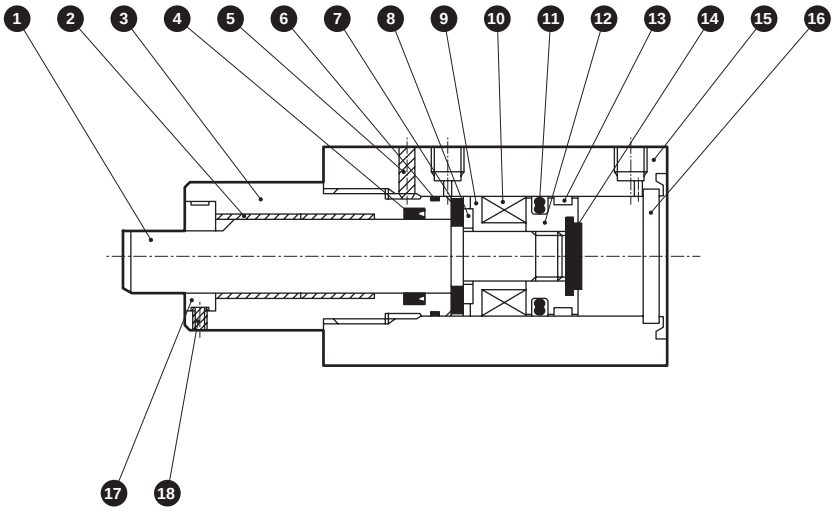

● STK-M-32/40/50

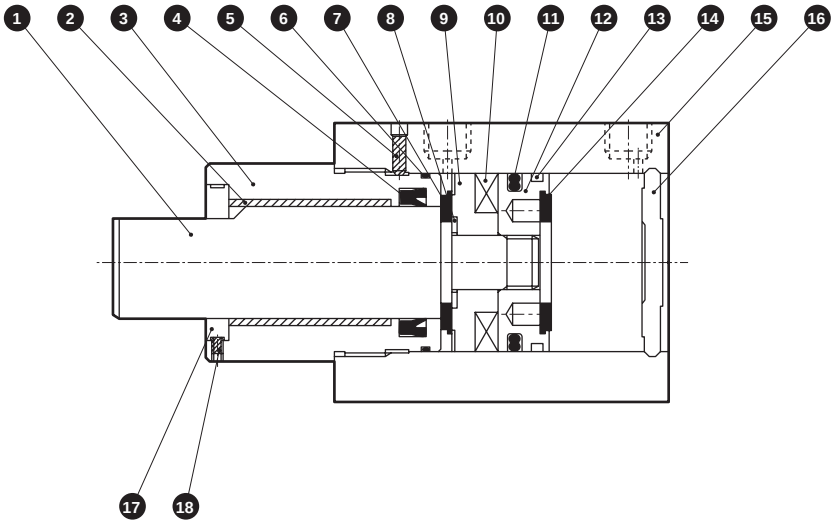

No.	Part name	Material	Remarks	No.	Part name	Material	Remarks
1	Piston rod	Stainless steel	Industrial chrome plating	11	Piston packing	Nitrile rubber	
2	Bush	Dry bearing		12	Piston	Aluminum alloy	Chromate
3	Rod cover	Aluminum alloy	Alumite	13	Wear ring	Acetal resin	
4	Rod packing	Nitrile rubber		14	Cushion rubber H	Urethane rubber	
5	Hexagon socket set screw	Steel	Black finish	15	Body	Aluminum alloy	Hard alumite
6	Metal gasket	Nitrile rubber		16	Cover	ø20: Stainless steel ø32 to 50: Aluminum alloy	ø32 to 50: Chromate
7	Cushion rubber R	Urethane rubber					
8	Spacer washer	Stainless steel		17	Rotation-stop spacer	Steel	Nickeling
9	Spacer	Polyamide		18	Hexagon socket set screw	Steel	Black finish
10	Magnet	Plastic					

Repair parts list

Bore size (mm)	Kit No.	Repair parts No.
ø20	STK-20K	4 6 11 13 14
ø32	STK-32K	
ø40	STK-40K	
ø50	STK-50K	

SCP*3
CMK2
CMA2
SCM
SCG
SCA2
SCS2
CKV2
CAV2/ COVP/N2
SSD2
SSG
SSD
CAT
MDC2
MVC
SMG
MSD/ MSDG
FC*
STK
SRL3
SRG3
SRM3
SRT3
MRL2
MRG2
SM-25
ShkAbs
FJ
FK
Spd Contr
Ending

Dimensions

● STK-M-20

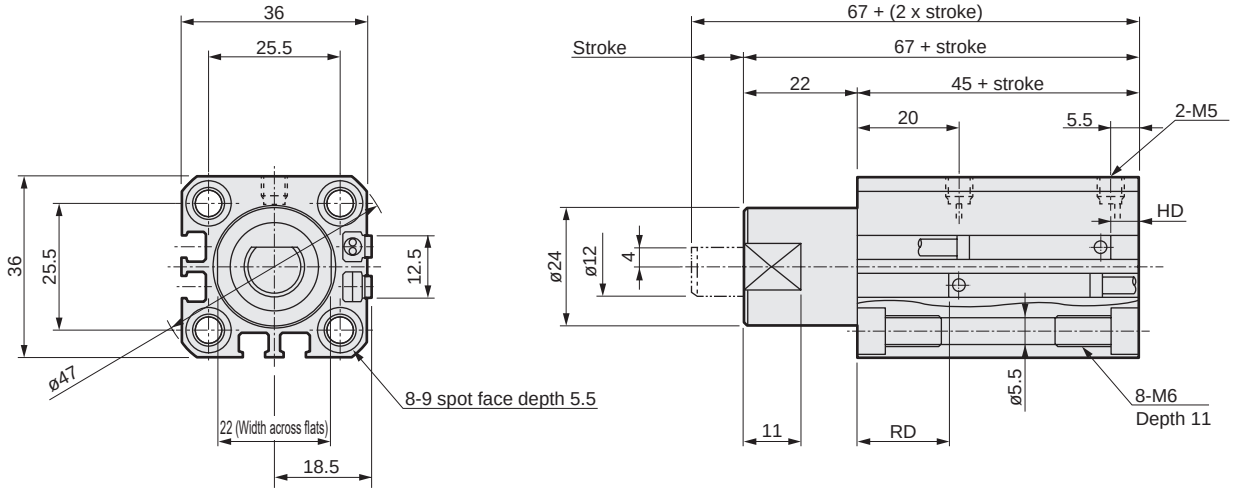

● STK-M-20-N11 (Dimensions other than displayed dimensions are the same as those of the above (STK-M-20).)

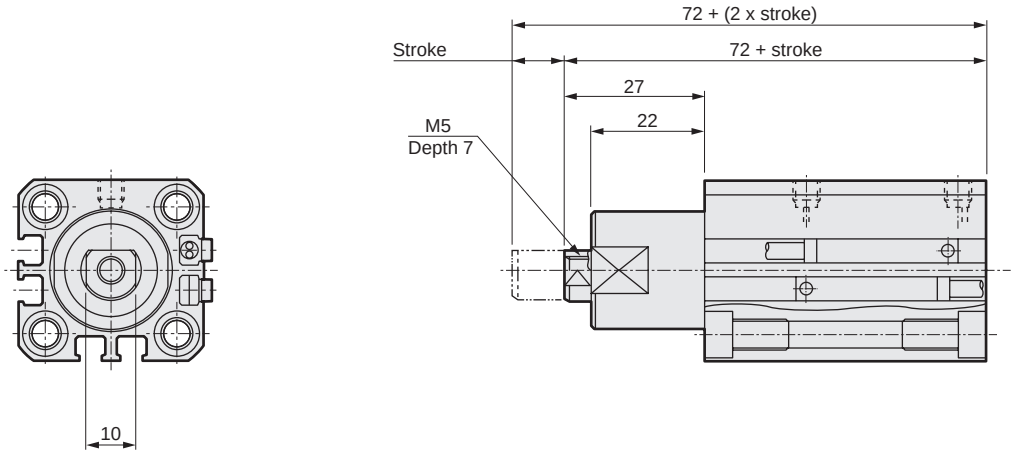

STK-M Dimensions with switch

Bore size	Reed T0H/T0V/T5H/T5V		Proximity T2H/T2V/T3H/T3V		Proximity T2WH/T2WV/T3WH/T3WV	
	HD	RD	HD	RD	HD	RD
ø20	5.5	21	5.5	21	7	22.5

Note: Refer to page 1559 for HD, RD and protruding dimensions of the 2-color LED, off-delay, T1* and T8* switches.

Dimensions

● STK-M-32/40/50

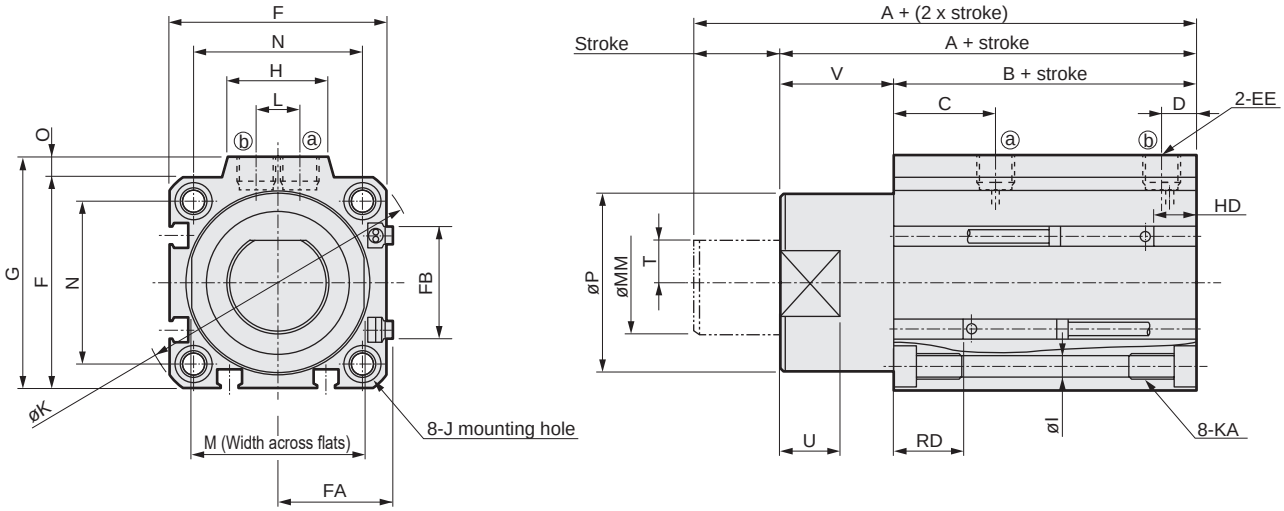

● STK-M-32/40/50-N11 (Dimensions other than displayed dimensions are the same as those of the above (STK-M-32/40/50).)

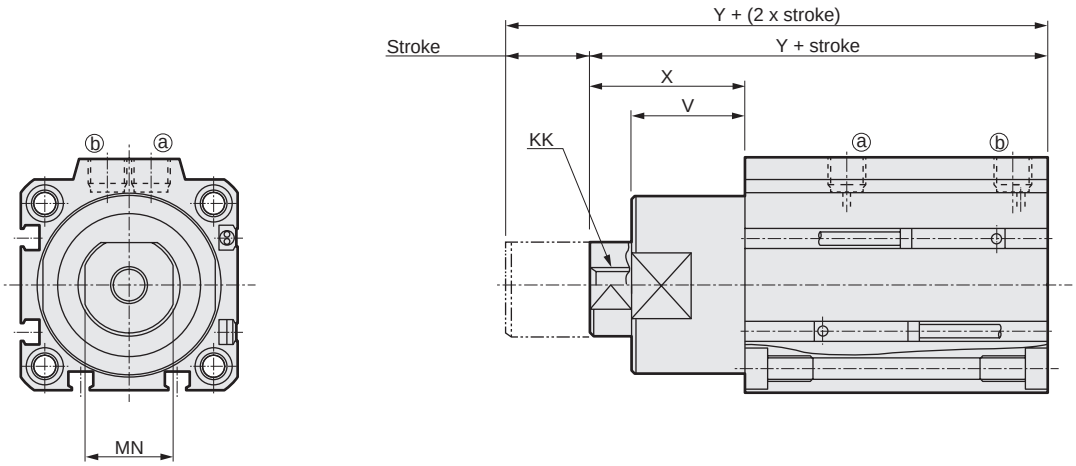

Code / Bore size	A	B	C	D	EE	F	FA	FB	G	H	I	J	K	KA	KK	L	M	MM	MN	N	O	P	T	U	V	X	Y
ø32	68	48	20	8	Rc1/8	45	23	20.5	49.5	24	5.5	9 spot face depth 5.5	60	M6 depth 11	M8 depth 13	10	32	20	17	34	4.5	36	8	13	20	30	78
ø40	80.5	52.5	24.5	8.5	Rc1/8	52	26.5	27.5	57	24	5.5	9 spot face depth 5.5	69	M6 depth 11	M8 depth 13	10	41	25	22	40	5	44	10	15	28	38	90.5
ø50	82	54	24.5	10.5	Rc1/4	64	32.5	28.5	71	33	6.9	11 spot face depth 6.5	86	M8 depth 13	M10 depth 15	15	50	30	27	50	7	56	12	15	28	43	97

Dimensions with switch

Bore size	Reed T0H/T0V/T5H/T5V		Proximity T2H/T2V/T3H/T3V		Proximity T2WH/T2WV/T3WH/T3WV	
	HD	RD	HD	RD	HD	RD
ø32	9.5	21	9.5	21	11	22.5
ø40	10.5	24	10.5	24	12	25.5
ø50	11.5	24	11.5	24	13	25.5

Note: Refer to page 1559 for HD, RD and protruding dimensions of the 2-color LED, off-delay, T1* and T8* switches.

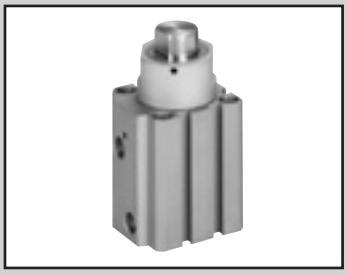

Stopper cylinder single acting/pull/rod end form chamfered type

STK-MY Series

● Bore size: ø20/ø32/ø40/ø50

JIS symbol

Single acting/pull

RoHS CAD

Specifications

1 MPa = 10 bar

Item		STK-MY			
Bore size	mm	ø20	ø32	ø40	ø50
Actuation		Single acting pull			
Working fluid		Compressed air			
Max. working pressure	MPa	1.0 (≈150 psi, 10 bar)			
Min. working pressure	MPa	0.22 (≈32 psi)	0.12 (≈17 psi, 1.2 bar)		
Proof pressure	MPa	1.6 (≈230 psi, 16 bar)			
Ambient temperature	°C	-10 (14°F) to 60 (140°F) (no freezing)			
Port size		M5	Rc1/8		Rc1/4
Stroke tolerance	mm	+2.0 0			
Working piston speed	mm/s	50 to 500			
Cushion		With rubber cushion			
Lubrication		Not required (use turbine oil class 1 ISO VG32 if necessary for lubrication)			
Rod end form		Chamfered type			
Allowable absorbed energy	J	Refer to page 1562.			

Stroke

Bore size (mm)	Stroke (mm)	Max. stroke (mm)	Min. stroke (mm)	Min. stroke with switch (mm)
ø20	10, 15, 20	20	10	10
ø32				
ø40	20, 25, 30	30	20	20
ø50				

Note: Products other than standard stroke are made-to-order products.

Spring load

(Unit: N)

Bore size (mm)	Stroke (mm)	When stroke = 0	At full stroke operation
ø20	10	11.5	14.7
	15	9.9	
	20	8.2	
ø32	10	24.5	31.4
	15	21.1	
	20	17.6	
ø40	20	29.0	44.4
	25	25.3	
	30	21.5	
ø50	20	55.4	84.8
	25	48.0	
	30	40.7	

Switch specifications

● 1-color/2-color LED

Item	2-wire proximity	2-wire proximity			3-wire proximity				2-wire reed						
	T1H/T1V	T2H/T2V/ T2JH/T2JV	T2YH/ T2YV	T2WH/ T2WV	T3H/ T3V	T3PH/ T3PV	T3YH/ T3YV	T3WH/ T3WV	T0H/T0V		T5H/T5V		T8H/T8V		
Applications	For programmable controller, relay, compact solenoid valve	Dedicated for programmable controller			For programmable controller, relay				For programmable controller, relay		For programmable controller, relay (no lamp), serial		For programmable controller, relay		
Output method	-				NPN output	PNP output	NPN output	NPN output	-						
Pwr. supp. V.	-				10 to 28 VDC				-						
Load voltage	85 to 265 VAC	10 to 30 VDC		24 VDC ±10%	30 VDC or less				12/24 VDC	100/110 VAC	5/12/24 VDC	100/110 VAC	12/24 VDC	110 VAC	220 VAC
Load current	5 to 100 mA	5 to 20 mA (*3)			100 mA or less		50 mA or less		5 to 50 mA	7 to 20 mA	50 mA or less	20 mA or less	5 to 50 mA	7 to 20 mA	7 to 10 mA
Indicator	LED (Lit when ON)	LED (Lit when ON)	Red/green LED (Lit when ON)	Red/green LED (Lit when ON)	LED (Lit when ON)	Yellow LED (Lit when ON)	Red/green LED (Lit when ON)	Red/green LED (Lit when ON)	LED (Lit when ON)		No indicator lamp		LED (Lit when ON)		
Leakage current	≤ 1 mA at 100 VAC, ≤ 2 mA at 200 VAC	1 mA or less			10 μA or less				0 mA						
Weight g	1 m:33 3 m:87 5 m:142	1 m:18 3 m:49 5 m:80	1 m:33 3 m:87 5 m:142	1 m:18 3 m:49 5 m:80	1 m:18 3 m:49 5 m:80		1 m:33 3 m:87 5 m:142	1 m:18 3 m:49 5 m:80	1 m:18 3 m:49 5 m:80				1 m:33 3 m:87 5 m:142		

*1 : Refer to Ending Page 1 for detailed switch specifications and dimensions.
*2 : Switches other than the above models, such as switches with connectors, are also available. Refer to Ending Page 1.
*3 : The max. load current is 20 mA at 25°C. The current is lower than 20 mA if the operating ambient temperature around the switch is higher than 25˚C. (5 to 10 mA at 60°C)

Cylinder weight table

(Unit: g)

Stroke / Bore size	10	15	20	25	30	Switch weight (Grommet)
ø20	218	233	247	-	-	Refer to the weight in the switch specifications.
ø32	457	482	507	-	-	
ø40	-	-	812	853	894	
ø50	-	-	1302	1328	1354	

Theoretical thrust table

(Unit: N)

Bore size (mm)	Working pressure MPa								
	0.2	0.3	0.4	0.5	0.6	0.7	0.8	0.9	1.0
ø20	-	45.6	65.7	85.8	1.06×10^2	1.26×10^2	1.46×10^2	1.66×10^2	1.86×10^2
ø32	66.6	1.16×10^2	1.65×10^2	2.14×10^2	2.63×10^2	3.12×10^2	3.61×10^2	4.10×10^2	4.59×10^2
ø40	1.09×10^2	1.85×10^2	2.62×10^2	3.38×10^2	4.15×10^2	4.92×10^2	5.68×10^2	6.45×10^2	7.21×10^2
ø50	1.67×10^2	2.92×10^2	4.18×10^2	5.44×10^2	6.69×10^2	7.95×10^2	9.21×10^2	1.05×10^3	1.17×10^3

SCP*3
CMK2
CMA2
SCM
SCG
SCA2
SCS2
CKV2
CAV2/ COVP/N2
SSD2
SSG
SSD
CAT
MDC2
MVC
SMG
MSD/ MSDG
FC*
STK
SRL3
SRG3
SRM3
SRT3
MRL2
MRG2
SM-25
ShkAbs
FJ
FK
Spd Contr
Ending

How to order

No switch (built-in magnet for switch)

STK-MY - 20 ( ) - 10 ——— N11

With switch (built-in magnet for switch)

STK-MY - 20 ( ) - 10 - T0H - R - N11

Ⓐ Bore size

Ⓑ Port thread

Ⓒ Stroke

Ⓓ Switch model No. *1 *2

Ⓔ Switch quantity

Ⓕ Option

Code	Description
Ⓐ Bore size (mm)	
20	ø20
32	ø32
40	ø40
50	ø50

Ⓑ Port thread	
Blank	Rc thread
NN	NPT thread (ø32 and over) (made-to-order product)
GN	G thread (ø32 and over) (made-to-order product)

Ⓒ Stroke (mm)

Bore size		ø20	ø32	ø40	ø50
10	10	●	●		
15	15	●	●		
20	20	●	●	●	●
25	25			●	●
30	30			●	●

Ⓓ Switch model No.

Axial lead wire	Radial lead wire	Contact	Voltage AC	Voltage DC	Indicator	Lead wire
T0H*	**T0V***	Reed	●	●	1-color LED	2-wire
T5H*	**T5V***	Reed	●	●	No indicator lamp	2-wire
T8H*	**T8V***	Reed	●	●	1-color LED	2-wire
T1H*	**T1V***	Proximity	●		1-color LED	2-wire
T2H*	**T2V***	Proximity		●	1-color LED	2-wire
T3H*	**T3V***	Proximity		●	1-color LED	3-wire
T3PH*	**T3PV***	Proximity		●	1-color LED	3-wire
T2WH*	**T2WV***	Proximity		●	2-color LED	2-wire
T2YH*	**T2YV***	Proximity		●	2-color LED	2-wire
T3WH*	**T3WV***	Proximity		●	2-color LED	3-wire
T3YH*	**T3YV***	Proximity		●	2-color LED	3-wire
T2JH*	**T2JV***	Proximity		●	1-color LED off-delay	2-wire

*** Lead wire length (m)**	
Blank	1 m (standard)
3	3 m (option)
5	5 m (option)

Ⓔ Switch quantity	
R	1 on rod side
H	1 on head side
D	2

Ⓕ Option	
Blank	Rod end no thread
N11	With rod end female thread

⚠ Precautions for model No. selection

*1 : Switches other than Ⓓ Switch model No. are also available. (Made to order) Refer to Ending Page 1 for details.

*2 : Switches are shipped with the product. Contact CKD if assembling before shipment is necessary.

[Example of model No.]

STK-MY-20-10-T0H-R-N11

Model: Stopper cylinder single acting/pull, rod end form chamfered type

Ⓐ Bore size : ø20 mm
Ⓑ Port thread : Rc thread
Ⓒ Stroke : 10 mm
Ⓓ Switch model No. : Reed T0H switch, Lead wire 1m
Ⓔ Switch quantity : 1 on rod side
Ⓕ Option : With rod end female thread

How to order switch

SW - T0H

Switch model No. (Item Ⓓ above)

Internal structure and parts list

● STK-MY-20

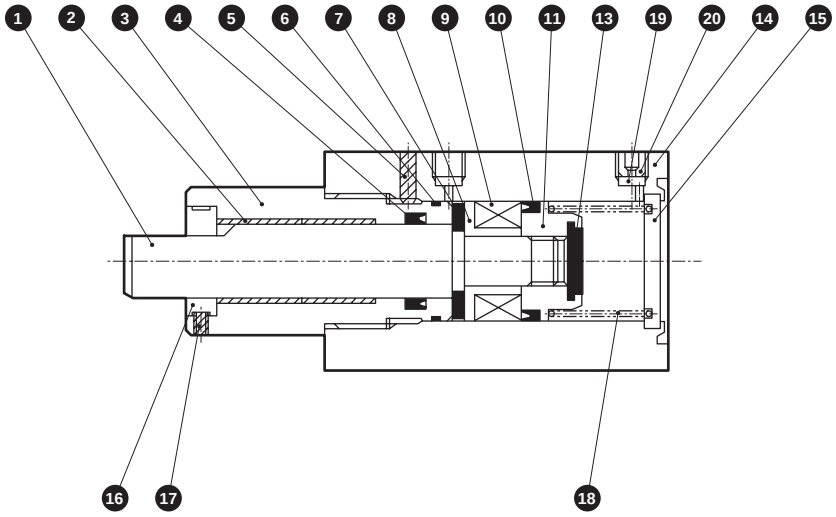

● STK-MY-32/40/50

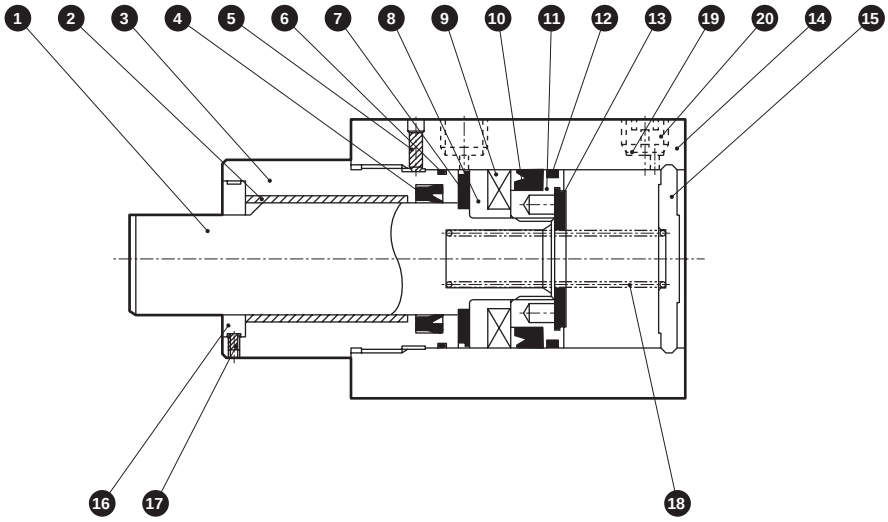

No.	Part name	Material	Remarks	No.	Part name	Material	Remarks
1	Piston rod	Stainless steel	Industrial chrome plating	12	Wear ring	Acetal resin	
2	Bush	Dry bearing		13	Cushion rubber H	Urethane rubber	
3	Rod cover	Aluminum alloy	Alumite	14	Body	Aluminum alloy	Hard alumite
4	Rod packing	Nitrile rubber		15	Cover	ø20: Steel ø32 to 50: Aluminum alloy	ø20: Galvanizing ø32 to 50: Chromate
5	Hexagon socket set screw	Steel	Black finish				
6	Metal gasket	Nitrile rubber		16	Rotation-stop spacer	Steel	Nickeling
7	Cushion rubber R	Urethane rubber		17	Hexagon socket set screw	Steel	Black finish
8	Spacer	Aluminum alloy		18	Coil spring	Steel	Electrodeposition
9	Magnet	Plastic	Chromate	19	Stainless steel wire mesh	Stainless steel	
10	Piston packing	Nitrile rubber		20	Plug	Stainless steel	
11	Piston	Aluminum alloy	Chromate				

Repair parts list

Bore size (mm)	Kit No.	Repair parts No.
ø20	STK-Y-20K	4 6 10 12 13
ø32	STK-Y-32K	
ø40	STK-Y-40K	
ø50	STK-Y-50K	

SCP*3
CMK2
CMA2
SCM
SCG
SCA2
SCS2
CKV2
CAV2/ COVP/N2
SSD2
SSG
SSD
CAT
MDC2
MVC
SMG
MSD/ MSDG
FC*
STK
SRL3
SRG3
SRM3
SRT3
MRL2
MRG2
SM-25
ShkAbs
FJ
FK
Spd Contr
Ending

Dimensions

● STK-MY-20

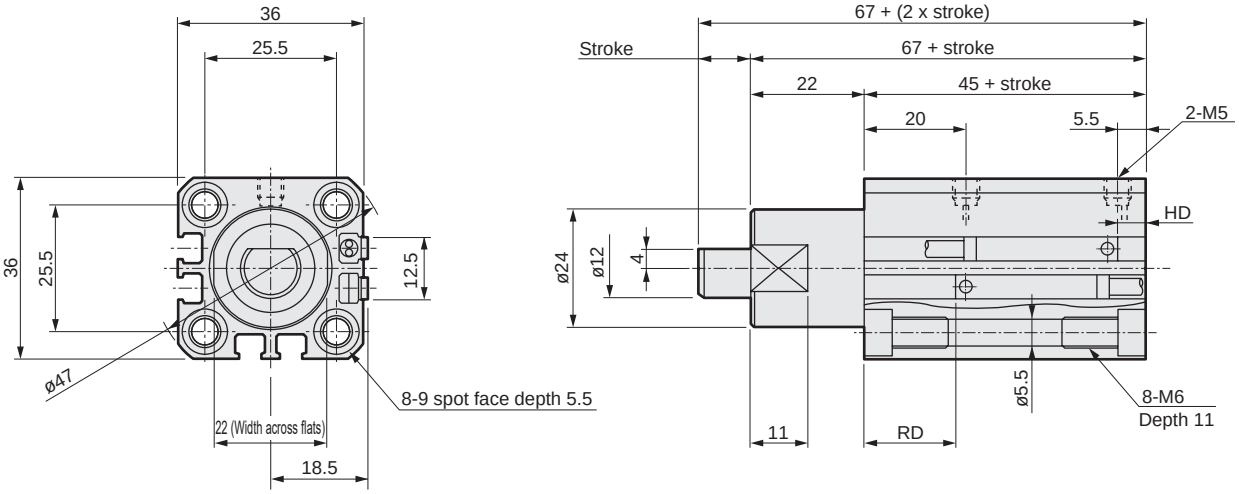

● STK-MY-20-N11 (Dimensions other than displayed dimensions are the same as those of the above (STK-MY-20).)

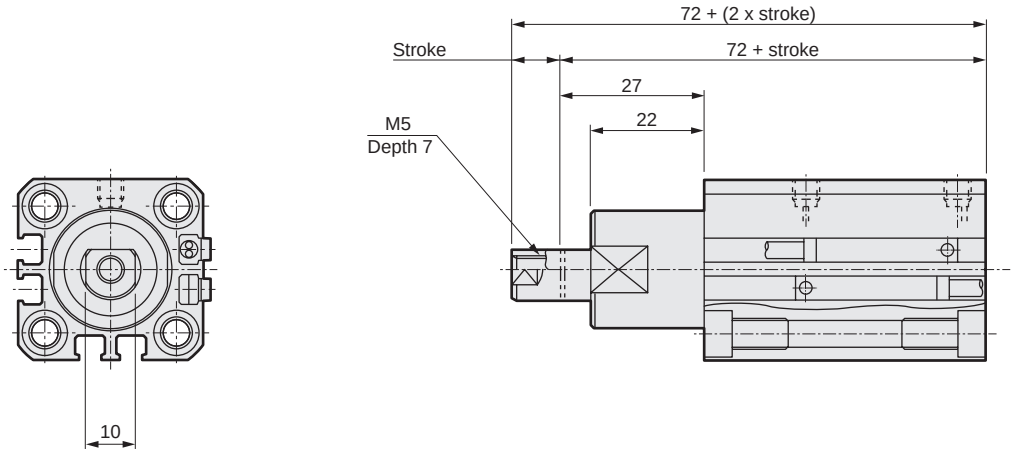

Dimensions with switch

Bore size	Reed T0H/T0V/T5H/T5V		Proximity T2H/T2V/T3H/T3V		Proximity T2WH/T2WV/T3WH/T3WV	
	HD	RD	HD	RD	HD	RD
ø20	7	19.5	7	19.5	8.5	21

Note: Refer to page 1560 for HD, RD and protruding dimensions of the 2-color LED, off-delay, T1* and T8* switches.

Dimensions

● STK-MY-32/40/50

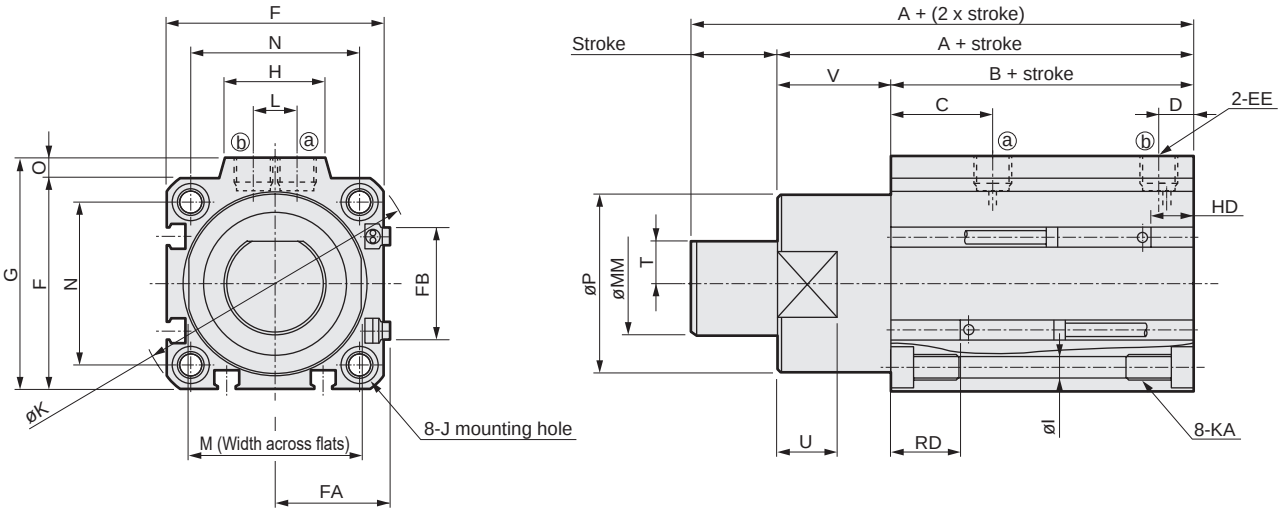

● STK-MY-32/40/50-N11 (Dimensions other than displayed dimensions are the same as those of the above (STK-MY-32/40/50).)

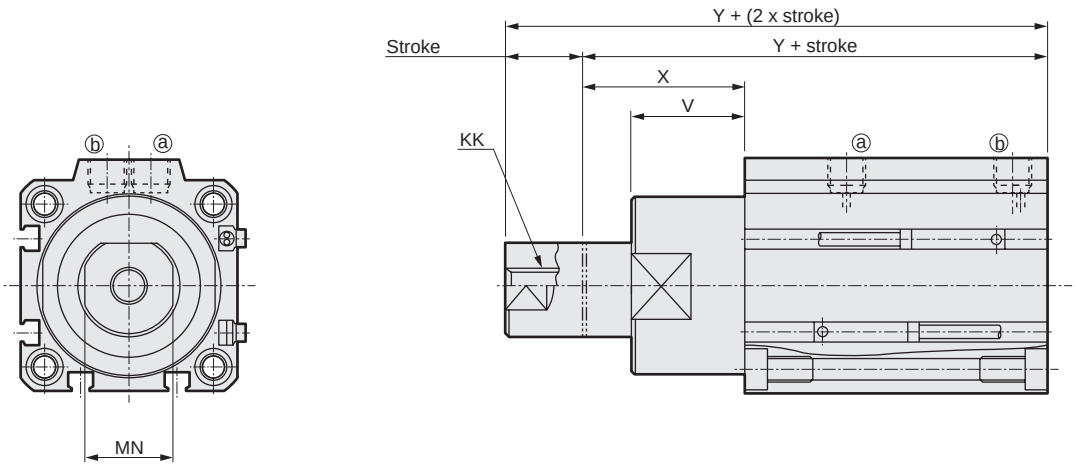

Code / Bore size	A	B	C	D	EE	F	FA	FB	G	H	I	J	K	KA	KK	L	M	MM	MN	N	O	P	T	U	V	X	Y
ø32	68	48	20	8	Rc1/8	45	23	20.5	49.5	24	5.5	9 spot face depth 5.5	60	M6 depth 11	M8 depth 13	10	32	20	17	34	4.5	36	8	13	20	30	78
ø40	80.5	52.5	24.5	8.5	Rc1/8	52	26.5	27.5	57	24	5.5	9 spot face depth 5.5	69	M6 depth 11	M8 depth 13	10	41	25	22	40	5	44	10	15	28	38	90.5
ø50	82	54	24.5	10.5	Rc1/4	64	32.5	28.5	71	33	6.9	11 spot face depth 6.5	86	M8 depth 13	M10 depth 15	15	50	30	27	50	7	56	12	15	28	43	97

Dimensions with switch

Bore size	Reed T0H/T0V/T5H/T5V		Proximity T2H/T2V/T3H/T3V		Proximity T2WH/T2WV/T3WH/T3WV	
	HD	RD	HD	RD	HD	RD
ø32	10.5	20	10.5	20	12	21.5
ø40	11.5	23	11.5	23	13	24.5
ø50	12.5	23	12.5	23	14	24.5

Note: Refer to page 1560 for HD, RD and protruding dimensions of the 2-color LED, off-delay, T1* and T8* switches.

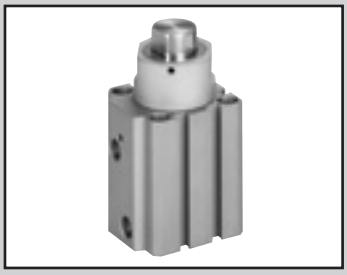

Stopper cylinder double acting/spring integrated
rod end form chamfered type

STK-MY1 Series

● Bore size: ø20/ø32/ø40/ø50

JIS symbol

Double acting/spring integrated

RoHS CAD

Specifications

1 MPa = 10 bar

Item		STK-MY1			
Bore size	mm	ø20	ø32	ø40	ø50
Actuation		Double acting/spring integrated			
Working fluid		Compressed air			
Max. working pressure	MPa	1.0 (≈150 psi, 10 bar)			
Min. working pressure	MPa	0.22 (≈32 psi)	0.12 (≈17 psi, 1.2 bar)		
Proof pressure	MPa	1.6 (≈230 psi, 16 bar)			
Ambient temperature	°C	-10 (14°F) to 60 (140°F) (no freezing)			
Port size		M5	Rc1/8		Rc1/4
Stroke tolerance	mm	+2.0 0			
Working piston speed	mm/s	50 to 500			
Cushion		With rubber cushion			
Lubrication		Not required (use turbine oil class 1 ISO VG32 if necessary for lubrication)			
Rod end form		Chamfered type			
Allowable absorbed energy	J	Refer to page 1562.			

Stroke

Bore size (mm)	Stroke (mm)	Max. stroke (mm)	Min. stroke (mm)	Min. stroke with switch (mm)
ø20	10, 15, 20	20	10	10
ø32				
ø40	20, 25, 30	30	20	20
ø50				

Note: Products other than standard stroke are made-to-order products.

Spring load

(Unit: N)

Bore size (mm)	Stroke (mm)	When stroke = 0	At full stroke operation
ø20	10	11.5	14.7
	15	9.9	
	20	8.2	
ø32	10	24.5	31.4
	15	21.1	
	20	17.6	
ø40	20	29.0	44.4
	25	25.3	
	30	21.5	
ø50	20	55.4	84.8
	25	48.0	
	30	40.7	

Switch specifications

● 1-color/2-color LED

Item	2-wire proximity	2-wire proximity			3-wire proximity				2-wire reed						
	T1H/T1V	T2H/T2V/ T2JH/T2JV	T2YH/ T2YV	T2WH/ T2WV	T3H/ T3V	T3PH/ T3PV	T3YH/ T3YV	T3WH/ T3WV	T0H/T0V		T5H/T5V		T8H/T8V		
Applications	For programmable controller, relay, compact solenoid valve	Dedicated for programmable controller			For programmable controller, relay				For programmable controller, relay		For programmable controller, relay (no lamp), serial		For programmable controller, relay		
Output method	-				NPN output	PNP output	NPN output	NPN output	-						
Pwr. supp. V.	-				10 to 28 VDC				-						
Load voltage	85 to 265 VAC	10 to 30 VDC		24 VDC ±10%	30 VDC or less				12/24 VDC	100/110 VAC	5/12/24 VDC	100/110 VAC	12/24 VDC	110 VAC	220 VAC
Load current	5 to 100 mA	5 to 20 mA (*3)			100 mA or less		50 mA or less		5 to 50 mA	7 to 20 mA	50 mA or less	20 mA or less	5 to 50 mA	7 to 20 mA	7 to 10 mA
Indicator	LED (Lit when ON)	LED (Lit when ON)	Red/green LED (Lit when ON)	Red/green LED (Lit when ON)	LED (Lit when ON)	Yellow LED (Lit when ON)	Red/green LED (Lit when ON)	Red/green LED (Lit when ON)	LED (Lit when ON)		No indicator lamp		LED (Lit when ON)		
Leakage current	≤ 1 mA at 100 VAC, ≤ 2 mA at 200 VAC	1 mA or less			10 μA or less				0 mA						
Weight g	1 m:33 3 m:87 5 m:142	1 m:18 3 m:49 5 m:80	1 m:33 3 m:87 5 m:142	1 m:18 3 m:49 5 m:80	1 m:18 3 m:49 5 m:80		1 m:33 3 m:87 5 m:142	1 m:18 3 m:49 5 m:80	1 m:18 3 m:49 5 m:80				1 m:33 3 m:87 5 m:142		

*1 : Refer to Ending Page 1 for detailed switch specifications and dimensions.
*2 : Switches other than the above models, such as switches with connectors, are also available. Refer to Ending Page 1.
*3 : The max. load current is 20 mA at 25°C. The current is lower than 20 mA if the operating ambient temperature around the switch is higher than 25˚C. (5 to 10 mA at 60°C)

Cylinder weight

(Unit: g)

Stroke / Bore size	10	15	20	25	30	Switch weight (Grommet)
ø20	218	233	247	-	-	Refer to the weight in the switch specifications.
ø32	457	482	507	-	-	
ø40	-	-	812	853	894	
ø50	-	-	1302	1328	1354	

Theoretical thrust table

(Unit: N)

Bore size (mm)	Operating direction	Working pressure MPa									
		0.15	0.2	0.3	0.4	0.5	0.6	0.7	0.8	0.9	1.0
ø20	Push	-	-	94.2	1.26×10^2	1.57×10^2	1.88×10^2	2.20×10^2	2.51×10^2	2.83×10^2	3.14×10^2
	Pull	-	-	45.6	65.7	85.8	1.06×10^2	1.26×10^2	1.46×10^2	1.66×10^2	1.86×10^2
ø32	Push	1.21×10^2	1.61×10^2	2.41×10^2	3.22×10^2	4.02×10^2	4.83×10^2	5.63×10^2	6.43×10^2	7.24×10^2	8.04×10^2
	Pull	42.1	66.6	1.16×10^2	1.65×10^2	2.14×10^2	2.63×10^2	3.12×10^2	3.61×10^2	4.10×10^2	4.59×10^2
ø40	Push	1.88×10^2	2.51×10^2	3.77×10^2	5.03×10^2	6.28×10^2	7.54×10^2	8.80×10^2	1.01×10^3	1.13×10^3	1.26×10^3
	Pull	70.5	1.09×10^2	1.85×10^2	2.62×10^2	3.38×10^2	4.15×10^2	4.92×10^2	5.68×10^2	6.45×10^2	7.21×10^2
ø50	Push	2.95×10^2	3.93×10^2	5.89×10^2	7.85×10^2	9.82×10^2	1.18×10^3	1.37×10^3	1.57×10^3	1.77×10^3	1.96×10^3
	Pull	1.04×10^2	1.67×10^2	2.92×10^2	4.18×10^2	5.44×10^2	6.69×10^2	7.95×10^2	9.21×10^2	1.05×10^3	1.17×10^3

How to order

No switch (built-in magnet for switch)

STK-MY1 - 20 ( ) - 10 ——— N11

With switch (built-in magnet for switch)

STK-MY1 - 20 ( ) - 10 - T0H - R - N11

Ⓐ Bore size

Ⓑ Port thread

Ⓒ Stroke

Ⓓ Switch model No. *1 *2

Ⓔ Switch quantity

Ⓕ Option

Code	Description
Ⓐ Bore size (mm)	
20	ø20
32	ø32
40	ø40
50	ø50

Ⓑ Port thread	
Blank	Rc thread
NN	NPT thread (ø32 and over) (made-to-order product)
GN	G thread (ø32 and over) (made-to-order product)

Ⓒ Stroke (mm)

Bore size		ø20	ø32	ø40	ø50
10	10	●	●		
15	15	●	●		
20	20	●	●	●	●
25	25			●	●
30	30			●	●

Ⓓ Switch model No.

Axial lead wire	Radial lead wire	Contact	Voltage AC	Voltage DC	Indicator	Lead wire
T0H*	**T0V***	Reed	●	●	1-color LED	2-wire
T5H*	**T5V***	Reed	●	●	No indicator lamp	2-wire
T8H*	**T8V***	Reed	●	●	1-color LED	2-wire
T1H*	**T1V***	Proximity	●		1-color LED	2-wire
T2H*	**T2V***	Proximity		●	1-color LED	2-wire
T3H*	**T3V***	Proximity		●	1-color LED	3-wire
T3PH*	**T3PV***	Proximity		●	1-color LED	3-wire
T2WH*	**T2WV***	Proximity		●	2-color LED	2-wire
T2YH*	**T2YV***	Proximity		●	2-color LED	2-wire
T3WH*	**T3WV***	Proximity		●	2-color LED	3-wire
T3YH*	**T3YV***	Proximity		●	2-color LED	3-wire
T2JH*	**T2JV***	Proximity		●	1-color LED off-delay	2-wire

*** Lead wire length (m)**	
Blank	1 m (standard)
3	3 m (option)
5	5 m (option)

Ⓔ Switch quantity	
R	1 on rod side
H	1 on head side
D	2

Ⓕ Option	
Blank	Rod end no thread
N11	With rod end female thread

⚠ Precautions for model No. selection

*1 : Switches other than Ⓓ Switch model No. are also available. (Made to order) Refer to Ending Page 1 for details.

*2 : Switches are shipped with the product. Contact CKD if assembling before shipment is necessary.

[Example of model No.]

STK-MY1-20-10-T0H-R-N11

Model: Stopper cylinder
Double acting/spring integrated/rod end form chamfered type

Ⓐ Bore size : ø20 mm
Ⓑ Port thread : Rc thread
Ⓒ Stroke : 10mm
Ⓓ Switch model No. : Reed T0H switch, Lead wire 1m
Ⓔ Switch quantity : 1 on rod side
Ⓕ Option : Rod end female thread

How to order switch

SW - T0H

Switch model No.
(Item Ⓓ above)

Internal structure and parts list

● STK-MY1-20

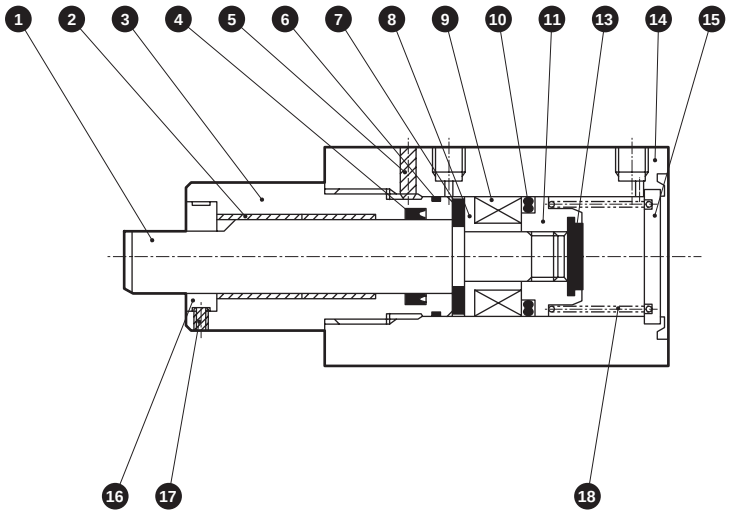

● STK-MY1-32/40/50

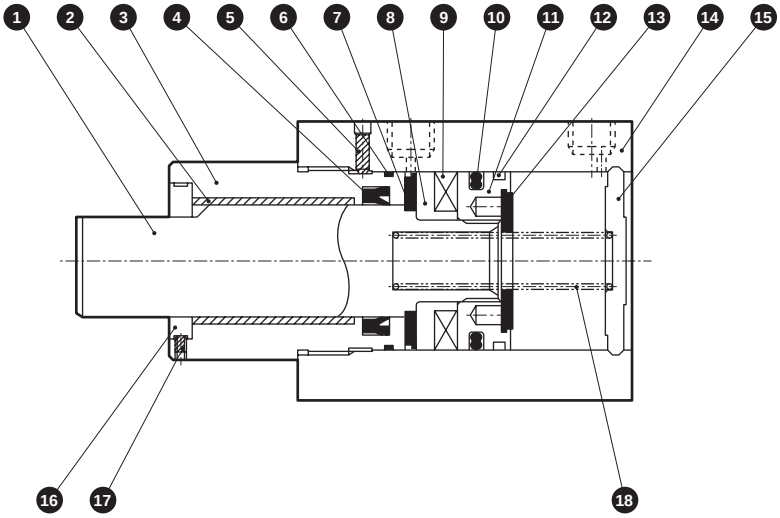

No.	Part name	Material	Remarks	No.	Part name	Material	Remarks
1	Piston rod	Stainless steel	Industrial chrome plating	11	Piston	Aluminum alloy	Chromate
2	Bush	Dry bearing		12	Wear ring	Acetal resin	
3	Rod cover	Aluminum alloy	Alumite	13	Cushion rubber H	Urethane rubber	
4	Rod packing	Nitrile rubber		14	Body	Aluminum alloy	Hard alumite
5	Hexagon socket set screw	Steel	Black finish	15	Cover	ø20: Steel ø32 to 50: Aluminum alloy	ø20: Galvanizing ø32 to 50: Chromate
6	Metal gasket	Nitrile rubber					
7	Cushion rubber R	Urethane rubber		16	Rotation-stop spacer	Steel	Nickeling
8	Spacer	Aluminum alloy	Chromate	17	Hexagon socket set screw	Steel	Black finish
9	Magnet	Plastic		18	Coil spring	Steel	Electrodeposition
10	Piston packing	Nitrile rubber					

Repair parts list

Bore size (mm)	Kit No.	Repair parts No.
ø20	STK-Y1-20K	4 6 10 12 13
ø32	STK-Y1-32K	
ø40	STK-Y1-40K	
ø50	STK-Y1-50K	

SCP*3
CMK2
CMA2
SCM
SCG
SCA2
SCS2
CKV2
CAV2/ COVP/N2
SSD2
SSG
SSD
CAT
MDC2
MVC
SMG
MSD/ MSDG
FC*
STK
SRL3
SRG3
SRM3
SRT3
MRL2
MRG2
SM-25
ShkAbs
FJ
FK
Spd Contr
Ending

Dimensions CAD

● STK-MY1-20

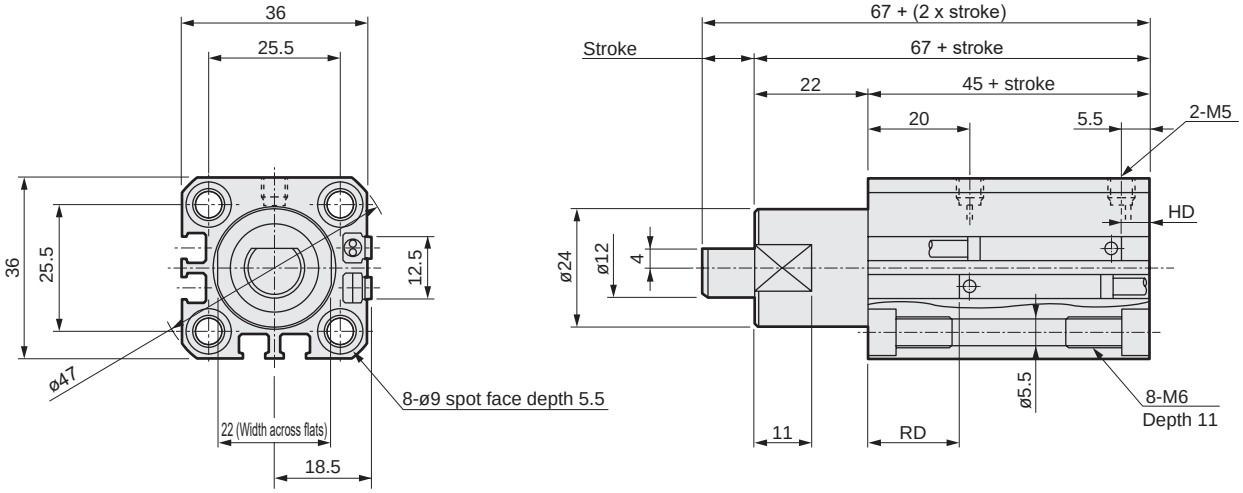

● STK-MY1-20-N11 (Dimensions other than displayed dimensions are the same as those of the above (STK-MY1-20).)

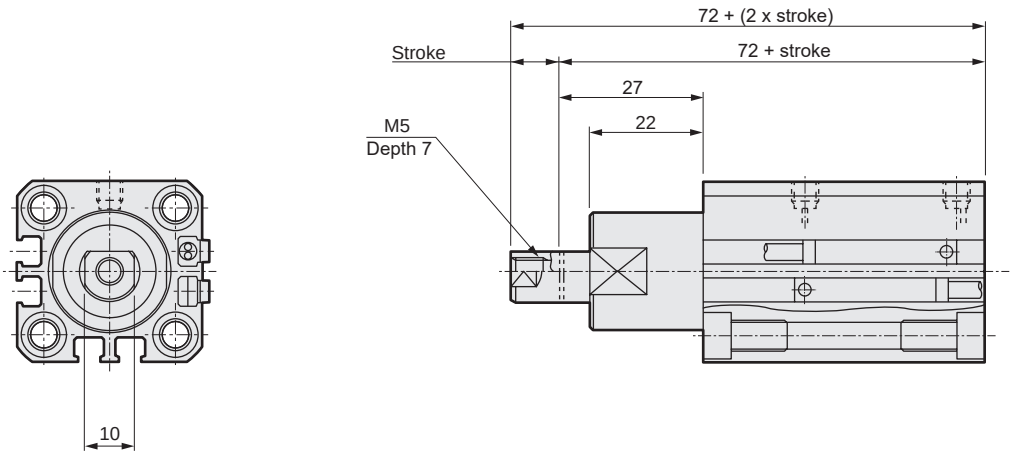

Dimensions with switch

Bore size	Reed T0H/T0V/T5H/T5V		Proximity T2H/T2V/T3H/T3V		Proximity T2WH/T2WV/T3WH/T3WV	
	HD	RD	HD	RD	HD	RD
ø20	7	19.5	7	19.5	8.5	21

Note: Refer to page 1560 for HD, RD and protruding dimensions of the 2-color LED, off-delay, T1* and T8* switches.

Dimensions

● STK-MY1-32/40/50

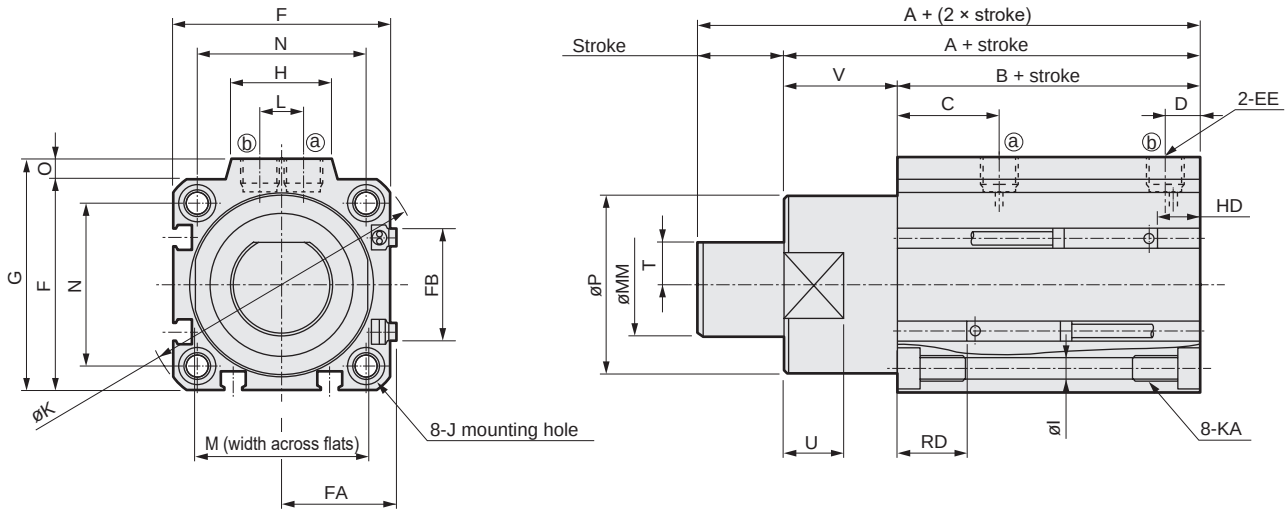

● STK-MY1-32/40/50-N11 (Dimensions other than displayed dimensions are the same as those of the above (STK-MY1-32/40/50).)

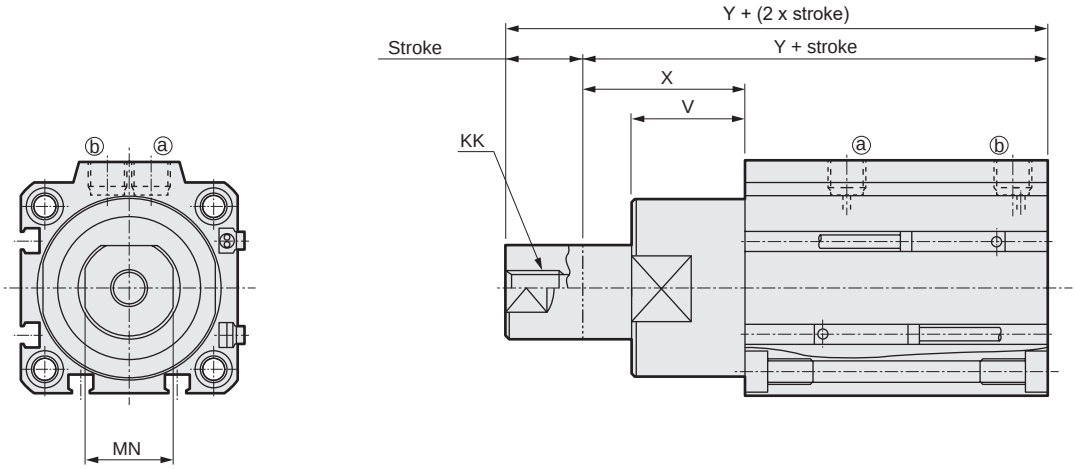

Code / Bore size	A	B	C	D	EE	F	FA	FB	G	H	I	J	K	KA	KK	L	M	MM	MN	N	O	P	T	U	V	X	Y
ø32	68	48	20	8	Rc1/8	45	23	20.5	49.5	24	5.5	9 spot face depth 5.5	60	M6 depth 11	M8 depth 13	10	32	20	17	34	4.5	36	8	13	20	30	78
ø40	80.5	52.5	24.5	8.5	Rc1/8	52	26.5	27.5	57	24	5.5	9 spot face depth 5.5	69	M6 depth 11	M8 depth 13	10	41	25	22	40	5	44	10	15	28	38	90.5
ø50	82	54	24.5	10.5	Rc1/4	64	32.5	28.5	71	33	6.9	11 spot face depth 6.5	86	M8 depth 13	M10 depth 15	15	50	30	27	50	7	56	12	15	28	43	97

Dimensions with switch

Bore size	Reed T0H/T0V/T5H/T5V		Proximity T2H/T2V/T3H/T3V		Proximity T2WH/T2WV/T3WH/T3WV	
	HD	RD	HD	RD	HD	RD
ø32	10.5	20	10.5	20	12	21.5
ø40	11.5	23	11.5	23	13	24.5
ø50	12.5	23	12.5	23	14	24.5

Note: Refer to page 1560 for HD, RD and protruding dimensions of the 2-color LED, off-delay, T1* and T8* switches.

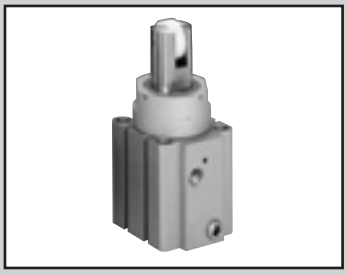

Stopper cylinder single acting/pull/rod end form roller

STK-JY Series

● Bore size: ø20/ø32/ø40/ø50

JIS symbol

Single acting/pull

Specifications

1 MPa = 10 bar

Item		STK-JY			
Bore size	mm	ø20	ø32	ø40	ø50
Actuation		Single acting pull			
Working fluid		Compressed air			
Max. working pressure	MPa	1.0 (≈150 psi, 10 bar)			
Min. working pressure	MPa	0.22 (≈32 psi)	0.12 (≈17 psi, 1.2 bar)		
Proof pressure	MPa	1.6 (≈230 psi, 16 bar)			
Ambient temperature	°C	-10 (14°F) to 60 (140°F) (no freezing)			
Port size		M5	Rc1/8		Rc1/4
Stroke tolerance	mm	+2.0 0			
Working piston speed	mm/s	50 to 500			
Cushion		With rubber cushion			
Lubrication		Not required (use turbine oil class 1 ISO VG32 if necessary for lubrication)			
Rod end form		Roller			
Allowable absorbed energy	J	Refer to page 1562.			

Stroke

Bore size (mm)	Stroke (mm)	Max. stroke (mm)	Min. stroke (mm)	Min. stroke with switch (mm)
ø20	10, 15, 20	20	10	10
ø32				
ø40	20, 25, 30	30	20	20
ø50				

Note: Products other than standard stroke are made-to-order products.

Spring load

(Unit: N)

Bore size (mm)	Stroke (mm)	When stroke = 0	At full stroke operation
ø20	10	11.5	14.7
	15	9.9	
	20	8.2	
ø32	10	24.5	31.4
	15	21.1	
	20	17.6	
ø40	20	29.0	44.4
	25	25.3	
	30	21.5	
ø50	20	55.4	84.8
	25	48.0	
	30	40.7	

Switch specifications

● 1-color/2-color LED

Item	2-wire proximity	2-wire proximity			3-wire proximity				2-wire reed						
	T1H/T1V	T2H/T2V/ T2JH/T2JV	T2YH/ T2YV	T2WH/ T2WV	T3H/ T3V	T3PH/ T3PV	T3YH/ T3YV	T3WH/ T3WV	T0H/T0V		T5H/T5V		T8H/T8V		
Applications	For programmable controller, relay, compact solenoid valve	Dedicated for programmable controller			For programmable controller, relay				For programmable controller, relay		For programmable controller, relay (no lamp), serial		For programmable controller, relay		
Output method	-				NPN output	PNP output	NPN output	NPN output	-						
Pwr. supp. V.	-				10 to 28 VDC				-						
Load voltage	85 to 265 VAC	10 to 30 VDC		24 VDC ±10%	30 VDC or less				12/24 VDC	100/110 VAC	5/12/24 VDC	100/110 VAC	12/24 VDC	110 VAC	220 VAC
Load current	5 to 100 mA	5 to 20 mA (*3)			100 mA or less		50 mA or less		5 to 50 mA	7 to 20 mA	50 mA or less	20 mA or less	5 to 50 mA	7 to 20 mA	7 to 10 mA
Indicator	LED (Lit when ON)	LED (Lit when ON)	Red/green LED (Lit when ON)	Red/green LED (Lit when ON)	LED (Lit when ON)	Yellow LED (Lit when ON)	Red/green LED (Lit when ON)	Red/green LED (Lit when ON)	LED (Lit when ON)		No indicator lamp		LED (Lit when ON)		
Leakage current	≤ 1 mA at 100 VAC, ≤ 2 mA at 200 VAC	1 mA or less			10 μA or less				0 mA						
Weight g	1 m:33 3 m:87 5 m:142	1 m:18 3 m:49 5 m:80	1 m:33 3 m:87 5 m:142	1 m:18 3 m:49 5 m:80	1 m:18 3 m:49 5 m:80		1 m:33 3 m:87 5 m:142	1 m:18 3 m:49 5 m:80	1 m:18 3 m:49 5 m:80				1 m:33 3 m:87 5 m:142		

*1 : Refer to Ending Page 1 for detailed switch specifications and dimensions.
*2 : Switches other than the above models, such as switches with connectors, are also available. Refer to Ending Page 1.
*3 : The max. load current is 20 mA at 25°C. The current is lower than 20 mA if the operating ambient temperature around the switch is higher than 25°C. (5 to 10 mA at 60°C)

Cylinder weight

(Unit: g)

Stroke / Bore size	10	15	20	25	30	Switch weight (Grommet)
ø20	225	240	254	-	-	Refer to the weight in the switch specifications.
ø32	482	507	532	-	-	
ø40	-	-	862	903	944	
ø50	-	-	1362	1388	1414	

Theoretical thrust table

(Unit: N)

Bore size (mm)	Working pressure MPa								
	0.2	0.3	0.4	0.5	0.6	0.7	0.8	0.9	1.0
ø20	-	45.6	65.7	85.8	1.06×10^2	1.26×10^2	1.46×10^2	1.66×10^2	1.86×10^2
ø32	66.6	1.16×10^2	1.65×10^2	2.14×10^2	2.63×10^2	3.12×10^2	3.61×10^2	4.10×10^2	4.59×10^2
ø40	1.09×10^2	1.85×10^2	2.62×10^2	3.38×10^2	4.15×10^2	4.92×10^2	5.68×10^2	6.45×10^2	7.21×10^2
ø50	1.67×10^2	2.92×10^2	4.18×10^2	5.44×10^2	6.69×10^2	7.95×10^2	9.21×10^2	1.05×10^3	1.17×10^3

SCP*3
CMK2
CMA2
SCM
SCG
SCA2
SCS2
CKV2
CAV2/COVP/N2
SSD2
SSG
SSD
CAT
MDC2
MVC
SMG
MSD/MSDG
FC*
STK
SRL3
SRG3
SRM3
SRT3
MRL2
MRG2
SM-25
ShkAbs
FJ
FK
Spd Contr
Ending

How to order

No switch (built-in magnet for switch)

STK-JY - 20 ◯ - 10

With switch (built-in magnet for switch)

STK-JY - 20 ◯ - 10 - T0H - R

Ⓐ Bore size

Ⓑ Port thread

Ⓒ Stroke

Ⓓ Switch model No.
*1
*2

Ⓔ Switch quantity

Code	Description
Ⓐ Bore size (mm)	
20	ø20
32	ø32
40	ø40
50	ø50

Ⓑ Port thread	
Blank	Rc thread
NN	NPT thread (ø32 and over) (made-to-order product)
GN	G thread (ø32 and over) (made-to-order product)

Ⓒ Stroke (mm)

Bore size		ø20	ø32	ø40	ø50
10	10	●	●		
15	15	●	●		
20	20	●	●	●	●
25	25			●	●
30	30			●	●

Ⓓ Switch model No.

Axial lead wire	Radial lead wire	Contact	Voltage AC	Voltage DC	Indicator	Lead wire
T0H*	**T0V***	Reed	●	●	1-color LED	2-wire
T5H*	**T5V***	Reed	●	●	No indicator lamp	2-wire
T8H*	**T8V***	Reed	●	●	1-color LED	2-wire
T1H*	**T1V***	Proximity	●		1-color LED	2-wire
T2H*	**T2V***	Proximity		●	1-color LED	2-wire
T3H*	**T3V***	Proximity		●	1-color LED	3-wire
T3PH*	**T3PV***	Proximity		●	1-color LED	3-wire
T2WH*	**T2WV***	Proximity		●	2-color LED	2-wire
T2YH*	**T2YV***	Proximity		●	2-color LED	2-wire
T3WH*	**T3WV***	Proximity		●	2-color LED	3-wire
T3YH*	**T3YV***	Proximity		●	2-color LED	3-wire
T2JH*	**T2JV***	Proximity		●	1-color LED off-delay	2-wire

*** Lead wire length (m)**	
Blank	1 m (standard)
3	3 m (option)
5	5 m (option)

Ⓔ Switch quantity	
R	1 on rod side
H	1 on head side
D	2

⚠ Precautions for model No. selection

*1 : Switches other than Ⓓ Switch model No. are also available. (Made to order) Refer to Ending Page 1 for details.
*2 : Switches are shipped with the product. Contact CKD if assembling before shipment is necessary.

[Example of model No.]

STK-JY-20-10-T0H-R

Model: Stopper cylinder single acting/pull, rod end form roller

Ⓐ Bore size : ø20 mm
Ⓑ Port thread : Rc thread
Ⓒ Stroke : 10mm
Ⓓ Switch model No. : Reed T0H switch, Lead wire 1m
Ⓔ Switch quantity : 1 on rod side

How to order switch

SW - T0H

Switch model No.
(Item Ⓓ above)

Internal structure and parts list

● STK-JY-20

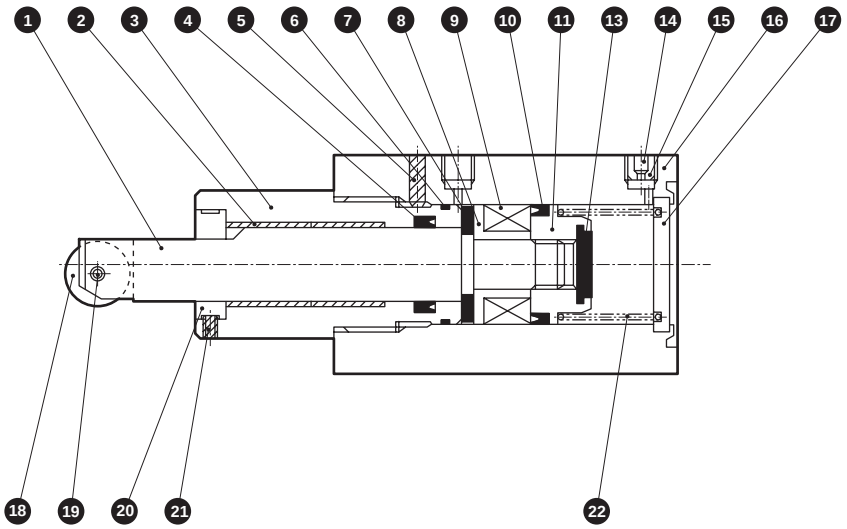

● STK-JY-32/40/50

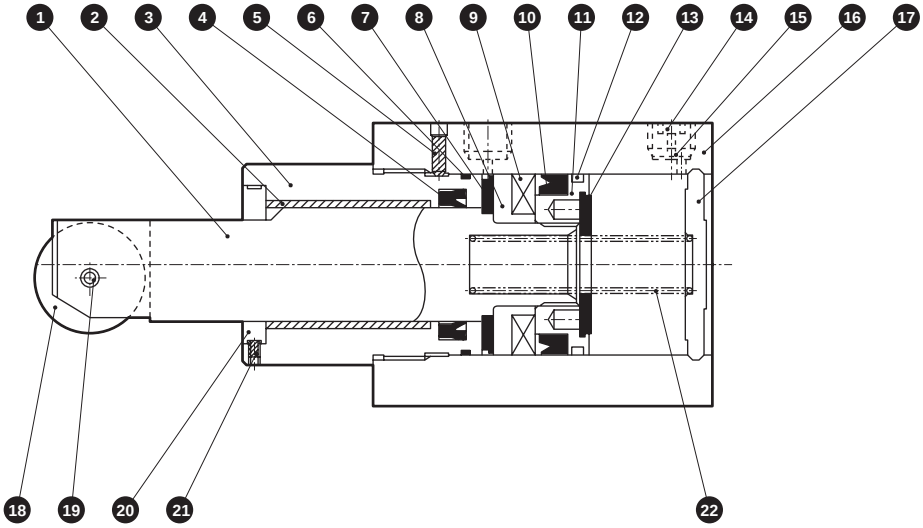

No.	Part name	Material	Remarks	No.	Part name	Material	Remarks
1	Piston rod	Stainless steel	Industrial chrome plating	13	Cushion rubber H	Urethane rubber	
2	Bush	Dry bearing		14	Stainless steel wire mesh	Stainless steel	
3	Rod cover	Aluminum alloy	Alumite	15	Plug	Stainless steel	
4	Rod packing	Nitrile rubber		16	Body	Aluminum alloy	Hard alumite
5	Hexagon socket set screw	Steel	Black finish	17	Cover	ø20: Steel ø32 to 50: Aluminum alloy	ø20: Galvanizing ø32 to 50: Chromate
6	Metal gasket	Nitrile rubber					
7	Cushion rubber R	Urethane rubber		18	Roller	Resin	
8	Spacer	Aluminum alloy	Chromate	19	Spring pin	Carbon tool steel	
9	Magnet	Plastic		20	Rotation-stop spacer	Steel	Nickeling
10	Piston packing	Nitrile rubber		21	Hexagon socket set screw	Steel	Black finish
11	Piston	Aluminum alloy	Chromate	22	Coil spring	Steel	Electrodeposition
12	Wear ring	Acetal resin					

Repair parts list

Bore size (mm)	Kit No.	Repair parts No.
ø20	STK-Y-20K	4 6 10 12 13
ø32	STK-Y-32K	
ø40	STK-Y-40K	
ø50	STK-Y-50K	

Dimensions

● STK-JY-20

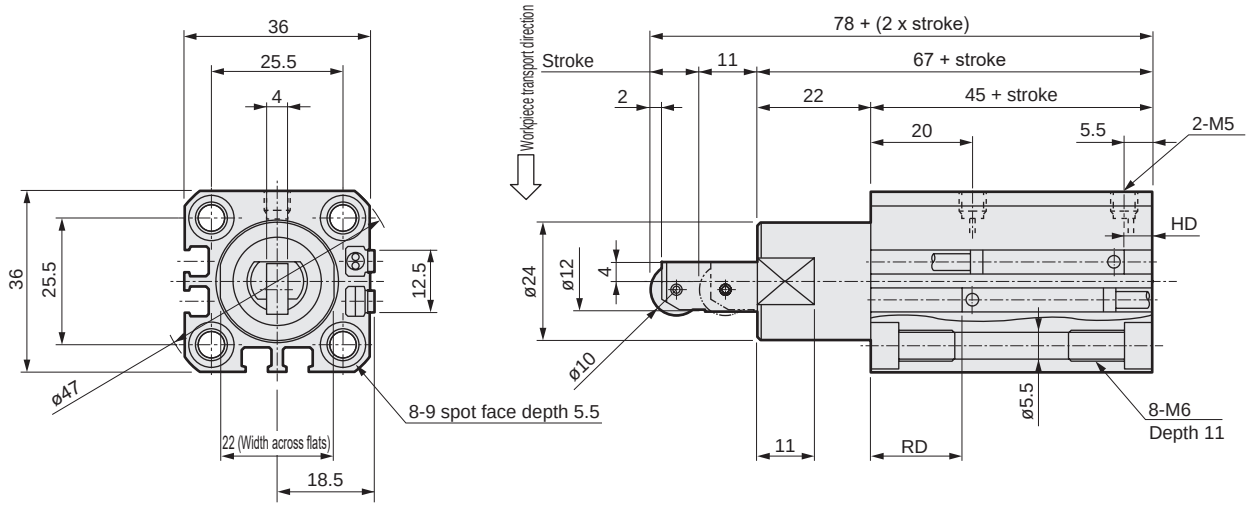

Dimensions with switch						
Bore size	Reed T0H/T0V/T5H/T5V		Proximity T2H/T2V/T3H/T3V		Proximity T2WH/T2WV/T3WH/T3WV	
	HD	RD	HD	RD	HD	RD
ø20	7	19.5	7	19.5	8.5	21

● STK-JY-32/40/50

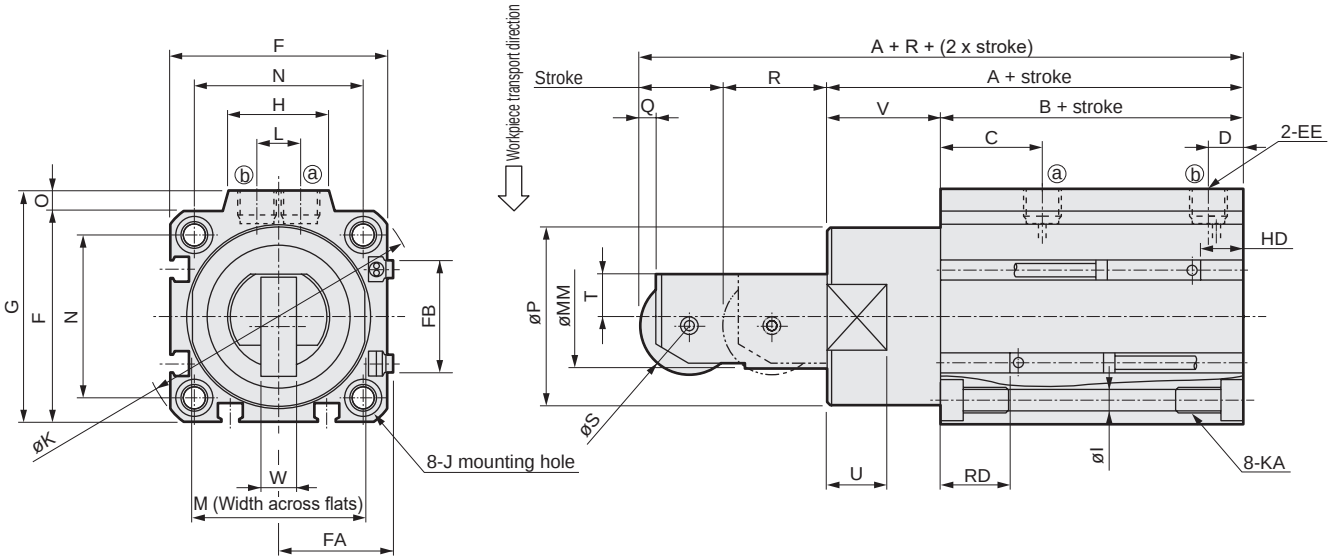

Code / Bore size	A	B	C	D	EE	F	FA	FB	G	H	I	J	K	KA	L	M	MM	N	O	P	Q	R	S	T	U	V	W
ø32	68	48	20	8	Rc1/8	45	23	20.5	49.5	24	5.5	9 spot face depth 5.5	60	M6 depth 11	10	32	20	34	4.5	36	3	19	18	8	13	20	8
ø40	80.5	52.5	24.5	8.5	Rc1/8	52	26.5	27.5	57	24	5.5	9 spot face depth 5.5	69	M6 depth 11	10	41	25	40	5	44	4	25	24	10	15	28	9
ø50	82	54	24.5	10.5	Rc1/4	64	32.5	28.5	71	33	6.9	11 spot face depth 6.5	86	M8 depth 13	15	50	30	50	7	56	4	25	28	12	15	28	10

Dimensions with switch						
Bore size	Reed T0H/T0V/T5H/T5V		Proximity T2H/T2V/T3H/T3V		Proximity T2WH/T2WV/T3WH/T3WV	
	HD	RD	HD	RD	HD	RD
ø32	10.5	20	10.5	20	12	21.5
ø40	11.5	23	11.5	23	13	24.5
ø50	12.5	23	12.5	23	14	24.5

Note: Refer to page 1560 for HD, RD and protruding dimensions of the 2-color LED, off-delay, T1* and T8* switches.

MEMO

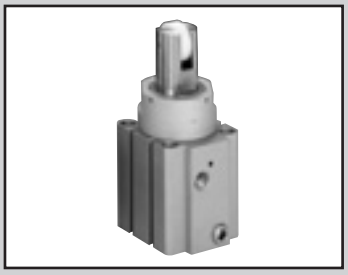

Stopper cylinder double acting/spring integrated/rod end form roller

STK-JY1 Series

● Bore size: ø20/ø32/ø40/ø50

JIS symbol

Double acting spring integrated pull type

Specifications

1 MPa = 10 bar

Item		STK-JY1			
Bore size	mm	ø20	ø32	ø40	ø50
Actuation		Double acting/spring integrated			
Working fluid		Compressed air			
Max. working pressure	MPa	1.0 (≈150 psi, 10 bar)			
Min. working pressure	MPa	0.22 (≈32 psi)	0.12 (≈17 psi, 1.2 bar)		
Proof pressure	MPa	1.6 (≈230 psi, 16 bar)			
Ambient temperature	°C	-10 (14°F) to 60 (140°F) (no freezing)			
Port size		M5	Rc1/8		Rc1/4
Stroke tolerance	mm	+2.0 0			
Working piston speed	mm/s	50 to 500			
Cushion		With rubber cushion			
Lubrication		Not required (use turbine oil class 1 ISO VG32 if necessary for lubrication)			
Rod end form		Roller			
Allowable absorbed energy	J	Refer to page 1562.			

Stroke

Bore size (mm)	Stroke (mm)	Max. stroke (mm)	Min. stroke (mm)	Min. stroke with switch (mm)
ø20	10, 15, 20	20	10	10
ø32				
ø40	20, 25, 30	30	20	20
ø50				

Note: Products other than standard stroke are made-to-order products.

Spring load

(Unit: N)

Bore size (mm)	Stroke (mm)	When stroke = 0	At full stroke operation
ø20	10	11.5	14.7
	15	9.9	
	20	8.2	
ø32	10	24.5	31.4
	15	21.1	
	20	17.6	
ø40	20	29.0	44.4
	25	25.3	
	30	21.5	
ø50	20	55.4	84.8
	25	48.0	
	30	40.7	

Switch specifications

● 1-color/2-color LED

Item	2-wire proximity	2-wire proximity			3-wire proximity				2-wire reed						
	T1H/T1V	T2H/T2V/ T2JH/T2JV	T2YH/ T2YV	T2WH/ T2WV	T3H/ T3V	T3PH/ T3PV	T3YH/ T3YV	T3WH/ T3WV	T0H/T0V		T5H/T5V		T8H/T8V		
Applications	For programmable controller, relay, compact solenoid valve	Dedicated for programmable controller			For programmable controller, relay				For programmable controller, relay		For programmable controller, relay (no lamp), serial		For programmable controller, relay		
Output method	-				NPN output	PNP output	NPN output	NPN output	-						
Pwr. supp. V.	-				10 to 28 VDC				-						
Load voltage	85 to 265 VAC	10 to 30 VDC		24 VDC ±10%	30 VDC or less				12/24 VDC	100/110 VAC	5/12/24 VDC	100/110 VAC	12/24 VDC	110 VAC	220 VAC
Load current	5 to 100 mA	5 to 20 mA (*3)			100 mA or less		50 mA or less		5 to 50 mA	7 to 20 mA	50 mA or less	20 mA or less	5 to 50 mA	7 to 20 mA	7 to 10 mA
Indicator	LED (Lit when ON)	LED (Lit when ON)	Red/green LED (Lit when ON)	Red/green LED (Lit when ON)	LED (Lit when ON)	Yellow LED (Lit when ON)	Red/green LED (Lit when ON)	Red/green LED (Lit when ON)	LED (Lit when ON)		No indicator lamp		LED (Lit when ON)		
Leakage current	≤ 1 mA at 100 VAC, ≤ 2 mA at 200 VAC	1 mA or less			10 μA or less				0 mA						
Weight g	1 m:33 3 m:87 5 m:142	1 m:18 3 m:49 5 m:80	1 m:33 3 m:87 5 m:142	1 m:18 3 m:49 5 m:80	1 m:18 3 m:49 5 m:80		1 m:33 3 m:87 5 m:142	1 m:18 3 m:49 5 m:80	1 m:18 3 m:49 5 m:80				1 m:33 3 m:87 5 m:142		

*1 : Refer to Ending Page 1 for detailed switch specifications and dimensions.
*2 : Switches other than the above models, such as switches with connectors, are also available. Refer to Ending Page 1.
*3 : The max. load current is 20 mA at 25°C. The current is lower than 20 mA if the operating ambient temperature around the switch is higher than 25˚C. (5 to 10 mA at 60°C)

Cylinder weight table

(Unit: g)

Stroke / Bore size	10	15	20	25	30	Switch weight (Grommet)
ø20	225	240	254	-	-	Refer to the weight in the switch specifications.
ø32	482	507	532	-	-	
ø40	-	-	862	903	944	
ø50	-	-	1362	1388	1414	

Theoretical thrust table

(Unit: N)

Bore size (mm)	Operating direction	Working pressure MPa									
		0.15	0.2	0.3	0.4	0.5	0.6	0.7	0.8	0.9	1.0
ø20	Push	-	-	94.2	$1.26x10^2$	$1.57x10^2$	$1.88x10^2$	$2.20x10^2$	$2.51x10^2$	$2.83x10^2$	$3.14x10^2$
	Pull	-	-	45.6	65.7	85.8	$1.06x10^2$	$1.26x10^2$	$1.46x10^2$	$1.66x10^2$	$1.86x10^2$
ø32	Push	$1.21x10^2$	$1.61x10^2$	$2.41x10^2$	$3.22x10^2$	$4.02x10^2$	$4.83x10^2$	$5.63x10^2$	$6.43x10^2$	$7.24x10^2$	$8.04x10^2$
	Pull	42.1	66.6	$1.16x10^2$	$1.65x10^2$	$2.14x10^2$	$2.63x10^2$	$3.12x10^2$	$3.61x10^2$	$4.10x10^2$	$4.59x10^2$
ø40	Push	$1.88x10^2$	$2.51x10^2$	$3.77x10^2$	$5.03x10^2$	$6.28x10^2$	$7.54x10^2$	$8.80x10^2$	$1.01x10^3$	$1.13x10^3$	$1.26x10^3$
	Pull	70.5	$1.09x10^2$	$1.85x10^2$	$2.62x10^2$	$3.38x10^2$	$4.15x10^2$	$4.92x10^2$	$5.68x10^2$	$6.45x10^2$	$7.21x10^2$
ø50	Push	$2.95x10^2$	$3.93x10^2$	$5.89x10^2$	$7.85x10^2$	$9.82x10^2$	$1.18x10^3$	$1.37x10^3$	$1.57x10^3$	$1.77x10^3$	$1.96x10^3$
	Pull	$1.04x10^2$	$1.67x10^2$	$2.92x10^2$	$4.18x10^2$	$5.44x10^2$	$6.69x10^2$	$7.95x10^2$	$9.21x10^2$	$1.05x10^3$	$1.17x10^3$

SCP*3
CMK2
CMA2
SCM
SCG
SCA2
SCS2
CKV2
CAV2/COVP/N2
SSD2
SSG
SSD
CAT
MDC2
MVC
SMG
MSD/MSDG
FC*
STK
SRL3
SRG3
SRM3
SRT3
MRL2
MRG2
SM-25
ShkAbs
FJ
FK
Spd Contr
Ending

How to order

No switch (built-in magnet for switch)

STK-JY1 - 20 ◯ - 10

With switch (built-in magnet for switch)

STK-JY1 - 20 ◯ - 10 - T0H - R

Ⓐ Bore size

Ⓑ Port thread

Ⓒ Stroke

Ⓓ Switch model No. *1 *2

Ⓔ Switch quantity

Code	Description
Ⓐ Bore size (mm)	
20	ø20
32	ø32
40	ø40
50	ø50

Ⓑ Port thread	
Blank	Rc thread
NN	NPT thread (ø32 and over) (made-to-order product)
GN	G thread (ø32 and over) (made-to-order product)

Ⓒ Stroke (mm)

Bore size		ø20	ø32	ø40	ø50
10	10	●	●		
15	15	●	●		
20	20	●	●	●	●
25	25			●	●
30	30			●	●

Ⓓ Switch model No.

Axial lead wire	Radial lead wire	Contact	Voltage AC	Voltage DC	Indicator	Lead wire
T0H*	**T0V***	Reed	●	●	1-color LED	2-wire
T5H*	**T5V***	Reed	●	●	No indicator lamp	2-wire
T8H*	**T8V***	Reed	●	●	1-color LED	2-wire
T1H*	**T1V***	Proximity	●		1-color LED	2-wire
T2H*	**T2V***	Proximity		●	1-color LED	2-wire
T3H*	**T3V***	Proximity		●	1-color LED	3-wire
T3PH*	**T3PV***	Proximity		●	1-color LED	3-wire
T2WH*	**T2WV***	Proximity		●	2-color LED	2-wire
T2YH*	**T2YV***	Proximity		●	2-color LED	2-wire
T3WH*	**T3WV***	Proximity		●	2-color LED	3-wire
T3YH*	**T3YV***	Proximity		●	2-color LED	3-wire
T2JH*	**T2JV***	Proximity		●	1-color LED off-delay	2-wire

*** Lead wire length (m)**	
Blank	1 m (standard)
3	3 m (option)
5	5 m (option)

Ⓔ Switch quantity	
R	1 on rod side
H	1 on head side
D	2

⚠ Precautions for model No. selection

*1 : Switches other than Ⓓ Switch model No. are also available. (Made to order) Refer to Ending Page 1 for details.

*2 : Switches are shipped with the product. Contact CKD if assembling before shipment is necessary.

[Example of model No.]

STK-JY1-20-10-T0H-R

Model: Stopper cylinder
Double acting/spring integrated/rod end form roller

Ⓐ Bore size : ø20 mm
Ⓑ Port thread : Rc thread
Ⓒ Stroke : 10mm
Ⓓ Switch model No. : Reed T0H switch, Lead wire 1m
Ⓔ Switch quantity : 1 on rod side

How to order switch

SW - T0H

Switch model No.
(Item Ⓓ above)

Internal structure and parts list

● STK-JY1-20

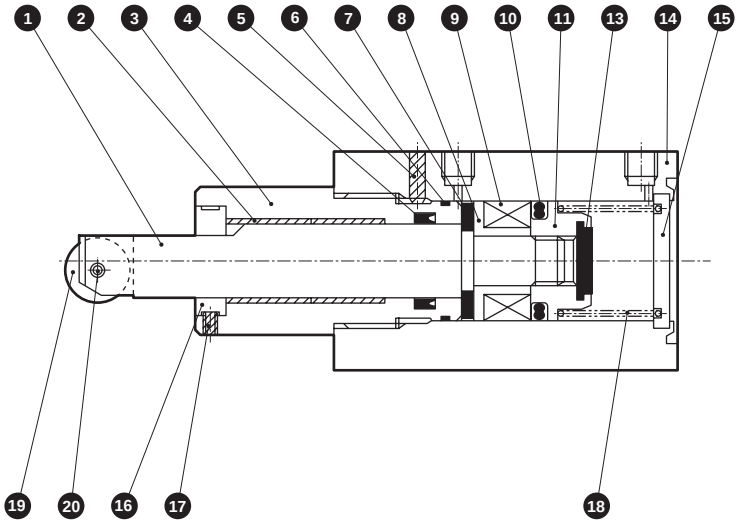

● STK-JY1-32/40/50

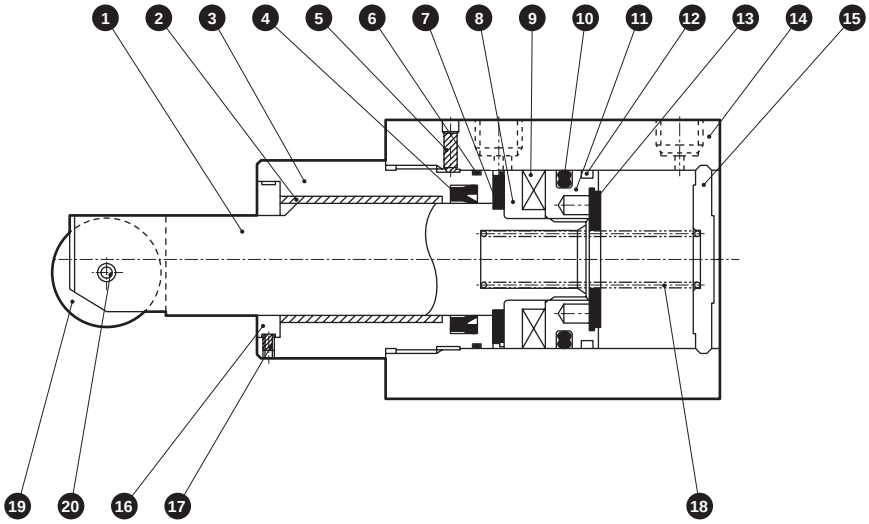

No.	Part name	Material	Remarks	No.	Part name	Material	Remarks
1	Piston rod	Stainless steel	Industrial chrome plating	12	Wear ring	Acetal resin	
2	Bush	Dry bearing		13	Cushion rubber H	Urethane rubber	
3	Rod cover	Aluminum alloy	Alumite	14	Body	Aluminum alloy	Hard alumite
4	Rod packing	Nitrile rubber		15	Cover	ø20: Steel ø32 to 50: Aluminum alloy	ø20: Galvanizing ø32 to 50: Chromate
5	Hexagon socket set screw	Steel	Black finish				
6	Metal gasket	Nitrile rubber		16	Rotation-stop spacer	Steel	Nickeling
7	Cushion rubber R	Urethane rubber		17	Hexagon socket set screw	Steel	Black finish
8	Spacer	Aluminum alloy	Chromate	18	Coil spring	Steel	Electrodeposition
9	Magnet	Plastic		19	Roller	Resin	
10	Piston packing	Nitrile rubber		20	Spring pin	Carbon tool steel	
11	Piston	Aluminum alloy	Chromate				

Repair parts list

Bore size (mm)	Kit No.	Repair parts No.
ø20	STK-Y1-20K	4 6 10 12 13
ø32	STK-Y1-32K	
ø40	STK-Y1-40K	
ø50	STK-Y1-50K	

SCP*3
CMK2
CMA2
SCM
SCG
SCA2
SCS2
CKV2
CAV2/ COVP/N2
SSD2
SSG
SSD
CAT
MDC2
MVC
SMG
MSD/ MSDG
FC*
STK
SRL3
SRG3
SRM3
SRT3
MRL2
MRG2
SM-25
ShkAbs
FJ
FK
Spd Contr
Ending

Dimensions

● STK-JY1-20

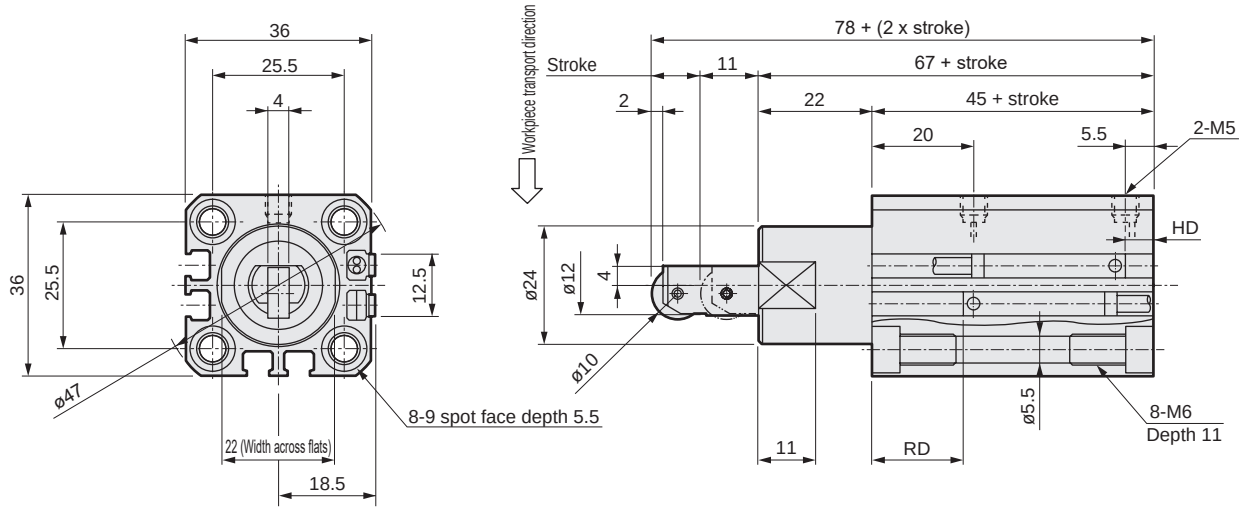

Dimensions with switch						
Bore size	Reed T0H/T0V/T5H/T5V		Proximity T2H/T2V/T3H/T3V		Proximity T2WH/T2WV/T3WH/T3WV	
	HD	RD	HD	RD	HD	RD
ø20	7	19.5	7	19.5	8.5	21

● STK-JY1-32/40/50

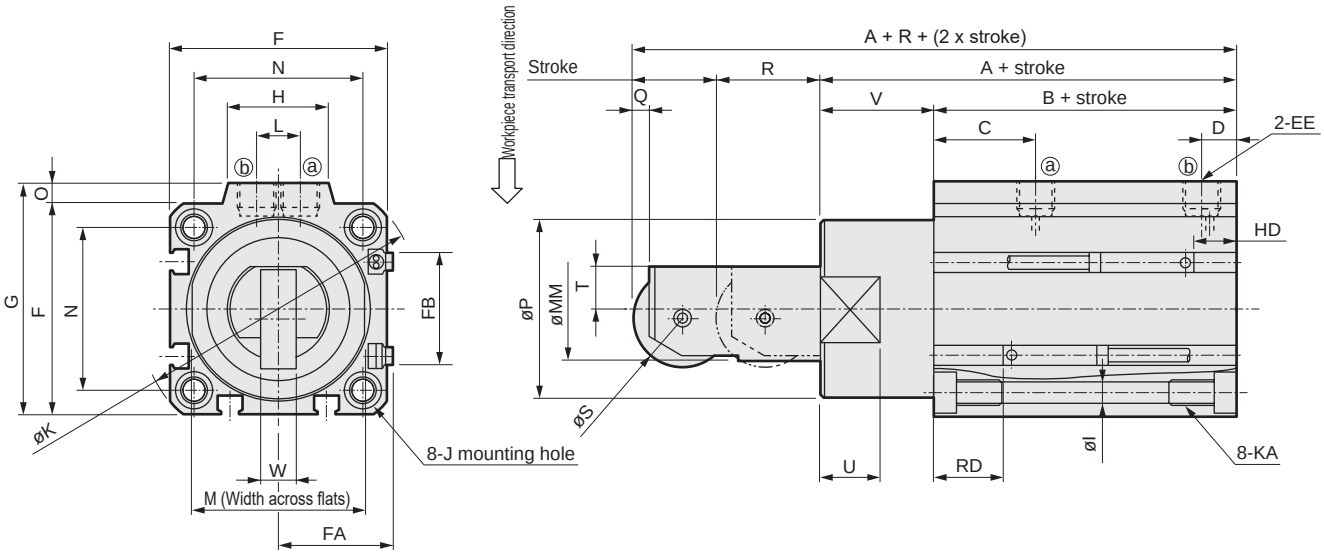

Code / Bore size	A	B	C	D	EE	F	FA	FB	G	H	I	J	K	KA	L	M	MM	N	O	P	Q	R	S	T	U	V	W
ø32	68	48	20	8	Rc1/8	45	23	20.5	49.5	24	5.5	9 spot face depth 5.5	60	M6 depth 11	10	32	20	34	4.5	36	3	19	18	8	13	20	8
ø40	80.5	52.5	24.5	8.5	Rc1/8	52	26.5	27.5	57	24	5.5	9 spot face depth 5.5	69	M6 depth 11	10	41	25	40	5	44	4	25	24	10	15	28	9
ø50	82	54	24.5	10.5	Rc1/4	64	32.5	28.5	71	33	6.9	11 spot face depth 6.5	86	M8 depth 13	15	50	30	50	7	56	4	25	28	12	15	28	10

Dimensions with switch						
Bore size	Reed T0H/T0V/T5H/T5V		Proximity T2H/T2V/T3H/T3V		Proximity T2WH/T2WV/T3WH/T3WV	
	HD	RD	HD	RD	HD	RD
ø32	10.5	20	10.5	20	12	21.5
ø40	11.5	23	11.5	23	13	24.5
ø50	12.5	23	12.5	23	14	24.5

Note: Refer to page 1560 for HD, RD and protruding dimensions of the 2-color LED, off-delay, T1* and T8* switches.

STK Series common dimensions (2-color LED, off-delay, with T1* and T8* switches)

Double acting (STK, STK-M)

● T2YH/V, T3YH/V, T2JH/V, T8H/V

· ø20

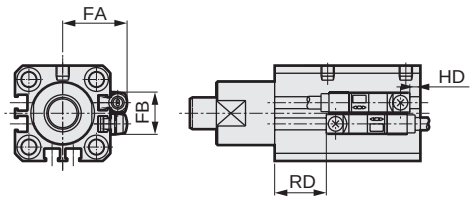

·ø32 to 50

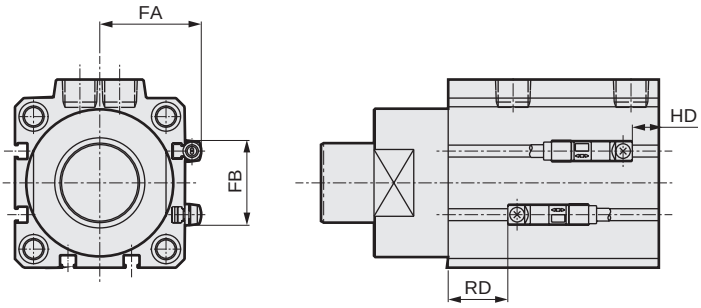

Code / Bore size (mm)	FA	FB	T2JH/V, T2YH/V, T3YH/V		T8H/V	
			RD	HD	RD	HD
ø20	24.3	16	19.5	4	15	0
ø32	28.8	24	19.5	8	15	3.5
ø40	32.3	31	22.5	8.5	18	4.5
ø50	38.3	32	22.5	10	18	5.5

● T1H/V

· ø20

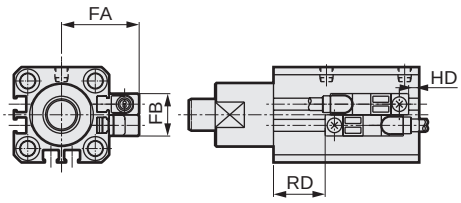

·ø32 to 50

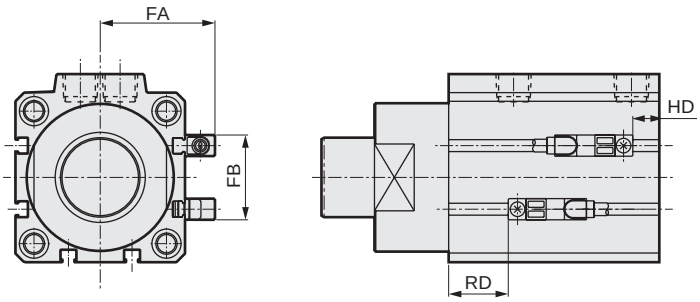

Code / Bore size (mm)	FA	FB	RD	HD
ø20	24.3	16	19.5	4
ø32	28.8	24	19.5	8
ø40	32.3	31	22.5	8.5
ø50	38.3	32	22.5	10

SCP*3
CMK2
CMA2
SCM
SCG
SCA2
SCS2
CKV2
CAV2/ COVP/N2
SSD2
SSG
SSD
CAT
MDC2
MVC
SMG
MSD/ MSDG
FC*
STK
SRL3
SRG3
SRM3
SRT3
MRL2
MRG2
SM-25
ShkAbs
FJ
FK
Spd Contr
Ending

STK Series common dimensions (2-color LED, off-delay, with T1* and T8* switches)

Single acting pull, double acting spring integrated (STK-Y, STK-Y1, STK-MY, STK-MY1, STK-JY, STK-JY1)

● T2YH/V, T3YH/V, T2JH/V, T8H/V

· ø20

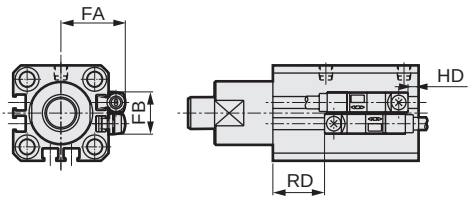

·ø32 to 50

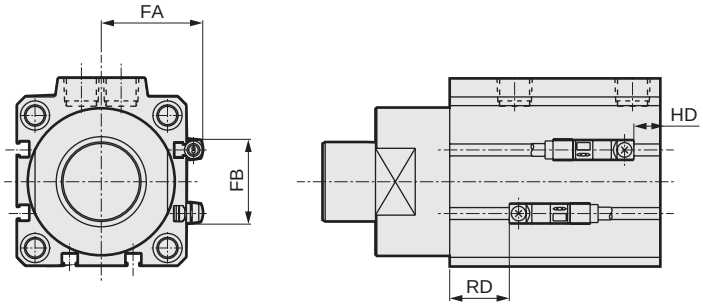

Code / Bore size (mm)	FA	FB	T2JH/V, T2YH/V, T3YH/V		T8H/V	
			RD	HD	RD	HD
ø20	24.3	16	18	5.5	13.5	1
ø32	28.8	24	18.5	9	14	4.5
ø40	32.3	31	21.5	10	17	5.5
ø50	38.3	32	21.5	11	17	6.5

● T1H/V

· ø20

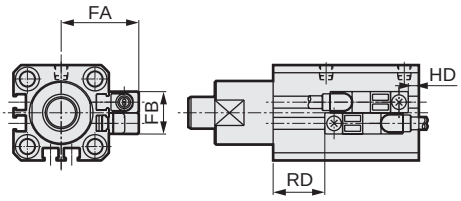

·ø32 to 50

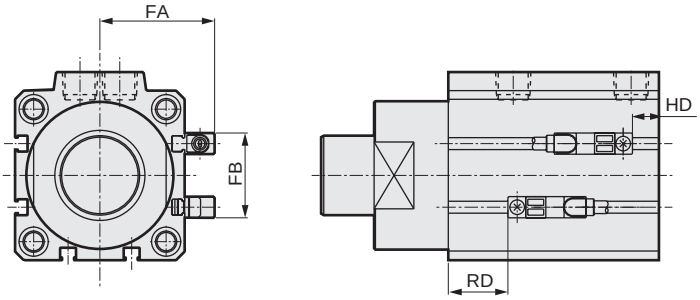

Code / Bore size (mm)	FA	FB	RD	HD
ø20	24.3	16	18	5.5
ø32	28.8	24	18.5	9
ø40	32.3	31	21.5	10
ø50	38.3	32	21.5	11

Mounting bolt model No.

STK - **BOLT** - **dxL**

Mounting bolts (Bolts are available in units of 4 bolts per set.)

How to read the list

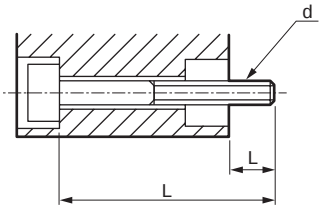

Material: Steel
Treatment: Black finish
d: Mounting bolt screw diameter
L: Mounting bolt length
L Mating side screw-in available length
(Note) The mounting bolts will be displayed as d x L.

Mounting bolt for STK-□

Model No.	L	dxL
STK-20-10	10.5	M5x60
15		x65
20		x70
STK-32-10	12.5	M5x65
15		x70
20		x75

Model No.	L	dxL
STK-40-20	13	M5x80
25		x85
30		x90
STK-50-20	12.5	M6x80
25		x85
30		x90

Stopper cylinder selection guide

Depending on the mounting method, the allowable absorbed energy varies. Check whether the mounting is A or B type in the figure below to select the cylinder.

A. Rod side installation		B. Head end installation	
Screw-in installation	Through bolt installation	Screw-in installation	Through bolt installation
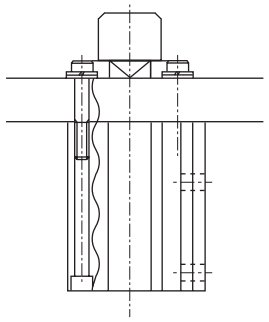	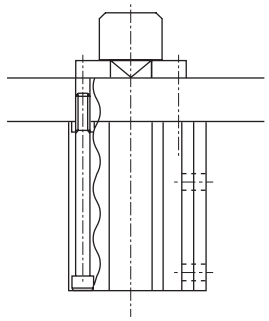	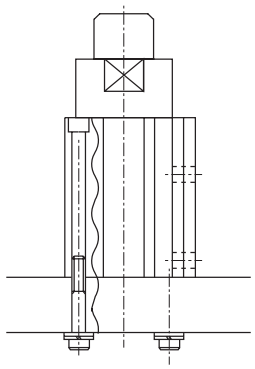	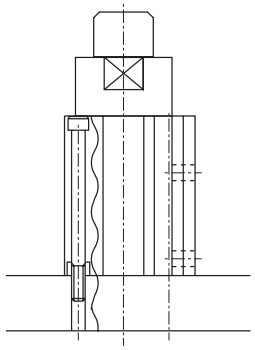

1. Method of selecting specified range

Select the model using transport weight (m) and transport speed (V) so that the model is within the allowable absorbed energy in the graph in the right .

Formula for kinetic energy calculation

$E=\frac{1}{2}mV^2$ E: Kinetic energy J
m: Transport weight kg
V: Transport speed m/s

(Example) Transport speed 15 m/min, transport weight 40 kg
A. For rod side installation

[How to look at the graph]
For the selection method of the specifications above, obtain the intersection point of the speed 15 m/min on the horizontal axis and the weight 40 kg on the vertical axis of Graph 1, and then select STK-40 within the allowable absorbed energy range.

A. Rod side installation

Fig. 1 Allowable absorbed energy value

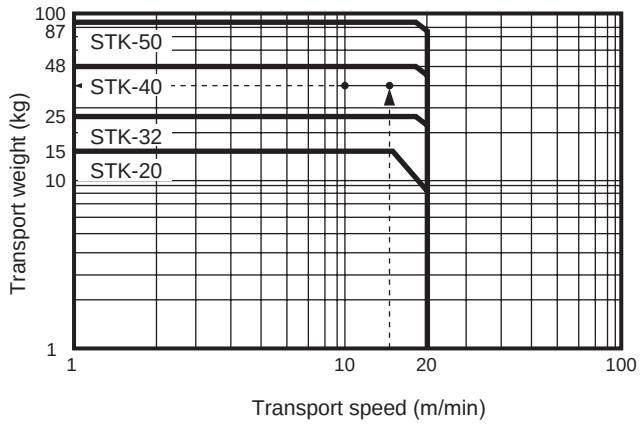

B. Head end installation

Fig. 2 Allowable absorbed energy value

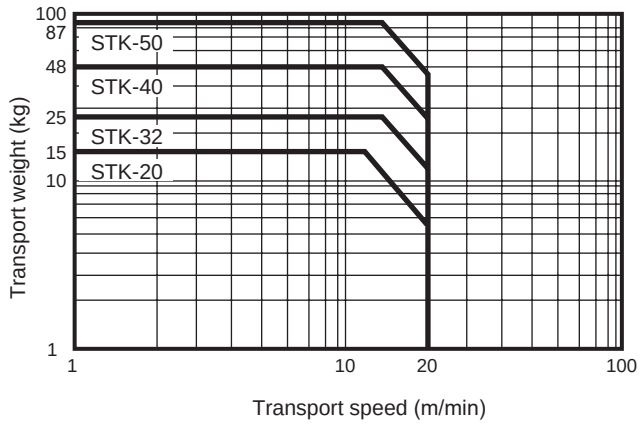

(Note) Rod end form: Compatible with all round rod types/chamfered types/roller.

Lateral load and working pressure

Depending on the degree of the lateral load applied to the rod end, the working pressure varies when the cylinder is pulled.
Therefore, calculate the required working pressure by the steps below.

1. Calculate the lateral load (F) applied to the rod end.

$F = 10 \cdot m \cdot n \cdot \mu_1$

F : Lateral load (N)
m : Transport weight(kg)
n : Number of transported objects
μ_1 : Coefficient of friction between transport pallet and conveyor

2. Obtain the thrust (P) required when the cylinder is pulled.

$P = F \cdot \mu_2$

P : Required thrust (N)
μ_2 : Coefficient of friction between transported object and rod
(Note) As the coefficient of friction varies depending on the material of the transported object, refer to the coefficient in the table below.

Material of transported object	Steel	Aluminum	Urethane
μ_2	0.5	0.8	2.0

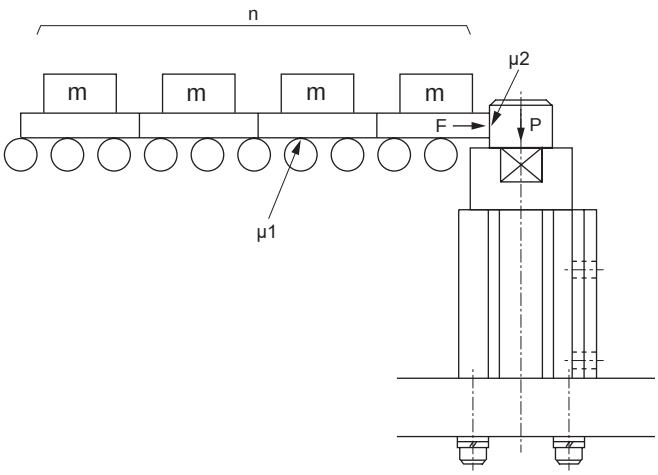

Allowable lateral load (Unit: N)

Bore size	Stroke				
	10	15	20	25	30
ø20	106.5	99.4	93.2	-	-
ø32	272.8	254.6	238.7	-	-
ø40	-	-	371.3	352.1	334.8
ø50	-	-	582.8	552.8	525.8

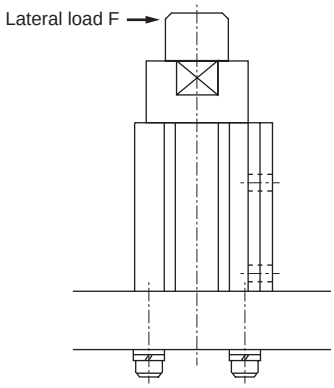

3. Obtain the working pressure from the required thrust (P) using Fig. 3.

Fig. 3 Required thrust force

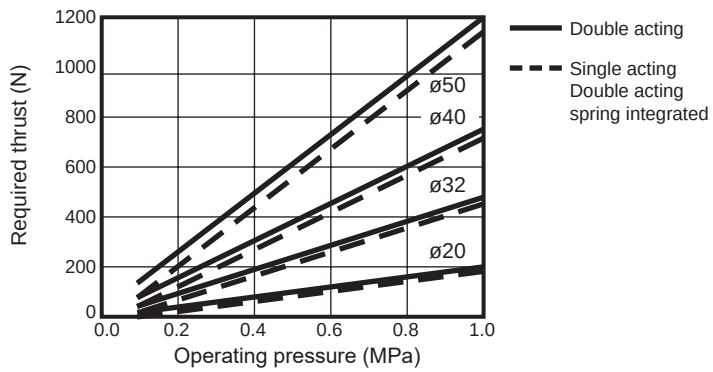

Safety Precautions

Be sure to read this section before use.

Refer to Intro Page 73 for general information of the cylinder, and to Intro Page 80 for general information of the cylinder switch.

Product-specific cautions: Stopper cylinder STK Series

Design/selection

1. Common

CAUTION

■ When using a stopper cylinder to brake loads directly connected to cylinder, etc

● The specified range is only for stopping pallets on the conveyor. When using a stopper cylinder to stop loads directly connected to cylinder, etc., because the cylinder thrust is applied as a lateral load, select the cylinder within the range of allowable absorbed energy and allowable lateral load.

2. Single acting STK-Y

CAUTION

■ Do not apply pressure from the head side for the single acting.

● If air is introduced for the head side for single acting, air leakage will occur.

Mounting, installation and adjustment

1. Common

CAUTION

■ Do not apply rotation torque to the piston rod. Attach the piston rod so that the rod contact surface is parallel to the pallet contact surface in order that torque is not applied.

■ Avoid using oil, etc., for the piston rod sliding section.

● Otherwise, cylinder malfunctions, etc., may result.

■ The cylinder switch could malfunction if there is a magnetic substance such as a metal plate installed adjacently. Confirm that a distance of at least 10 mm is allocated from the surface of the cylinders.
(Same clearance for all bore sizes)

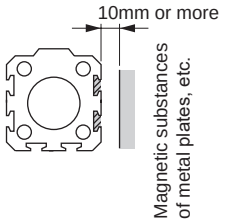

■ The cylinder switch could malfunction if cylinders are installed adjacently. Check that the following distances are allocated between cylinders.
(Same clearance for all bore sizes)

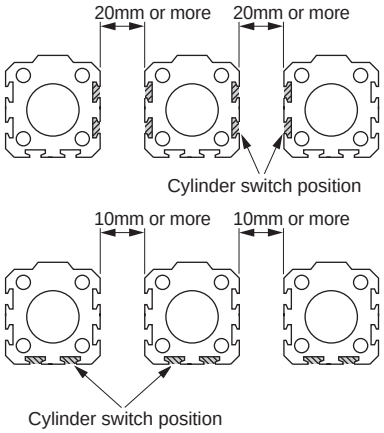

2. Single acting STK-Y

⚠ CAUTION

■ Do not leave the single acting cylinder pressurized. If it is left pressurized, the piston rod may not be returned by the spring force when the pressure is released.

3. Rod end form chamfered type with female thread STK-M-N11

⚠ CAUTION

■ Avoid using the product so as to apply rotation torque to the piston rod.
The spacer for rotation-stop comes off and the direction of the chamfered piston rod is changed.

■ When fixing a workpiece onto the end of the piston rod, push the piston rod to the stroke end and apply a wrench to the section projecting from the rod's parallel section. Be careful when tightening so that torque is not applied to the cylinder body.

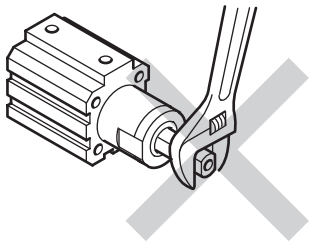

Use/maintenance

1. Common

⚠ CAUTION

■ As compatible piping fittings are limited, refer to the table below to select the fitting.

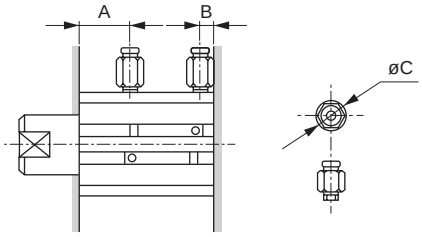

Item / Bore size (mm)	Port size	Port position dimensions A	Port position dimensions B	Applicable fittings	Fitting O.D. øC	Inapplicable fittings
ø20	M5	8	5.5	SC3W-M5-4 SC3W-M5-6 GWS4-M5-S GWS4-M5 GWL4-M5 GWL6-M5	ø11 or less	GWS6-M5
ø32	Rc1/8	8	8	SC3W-6-4/6/8 GWS4-6 GWS6-6 GWS8-6 GWL4-6 GWL6-6	ø15 or less	GWS10-6 GWL-8-6 GWL10-6
ø40		12	8.5			
ø50	Rc1/4	10.5	10.5	SC3W-8-6/8/10 GWS4-8 GWS6-8 GWS10-8 GWL4 to 12-8	ø21 or less	GWS-12-8

■ When changing the direction of the rotation-stop, loosen the rod cover set screws (3 positions) to change position arbitrarily and then tighten them again.

2. Spring integrated double acting STK-Y1

⚠ CAUTION

■ Spring integrated double acting is usually used as a double acting, and when the air is shut off for any reason, the rod is pushed and the stopper function is maintained.

Rodless cylinder

	Page
Rodless cylinder series variations	1568
Rodless cylinder **SRL3** Series	1569
High precision guided rodless cylinder **SRG3** Series (single guide)	1645
High precision guided rodless cylinder **SRM3** Series (double guide)	1673
Rodless cylinder with brake **SRT3** Series	1703
Magnet rodless cylinder **MRL2** Series	1731
Magnet rodless cylinder high precision **MRG2** Series	1763
Shuttle mover **SM-25** Series	1783

Series variation

Rodless cylinder SR*3 Series

Variation/model No.	Bore size (equiv.)										Page
	ø12	ø16	ø20	ø25	ø32	ø40	ø50	ø63	ø80	ø100	
Basic SRL3 Series Basic model of space saving	●	●	●	●	●	●	●	●	●	●	1574
Resin guide SRL3-G Series With simple resin guide	●	●	●	●	●	●	●	●	●	●	1590
High precision guide (with 1-axis linear guide) SRG3 Series With high precision guide	●	●	●	●							1650
High precision guide (with 2-axis linear guide) SRM3 Series With high precision guide				●	●	●		●			1676
With brake SRT3 Series With brake	●	●	●	●	●	●	●	●			1706
Standard/position locking SRL3-Q Series Standard/with position locking function	●	●	●	●	●	●	●	●	●	●	1604
Resin guide/position locking SRL3-GQ Series With simple resin guide/position locking function	●	●	●	●	●	●	●	●	●	●	1614
High precision guide/position locking (with 2-axis linear guide) SRM3-Q Series 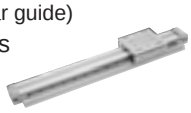 High precision guide/with position locking function				●	●	●	●	●			1676

SRL3

Rodless cylinder

ø12/ø16/ø20/ø25/ø32/ø40
ø50/ø63/ø80/ø100

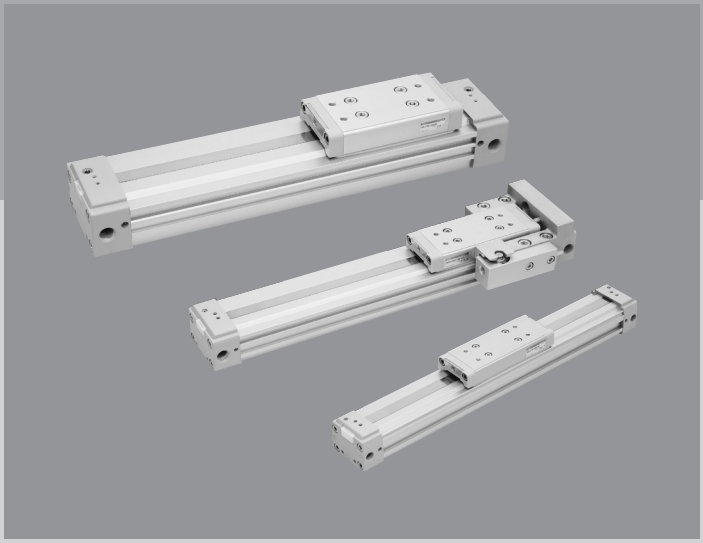

Overview

Resistant to high load and durable. High-speed rodless cylinder Series runs from ø12 to ø100 with a variety of choices.

Features

Flat cylinder
Piston is flat, with a structure allowing it to receive load. Highly load-resistant, with rotation-stop mechanism also provided.

Seal belt
The sealed part is straight with better sealing performance.

Magnet provided as standard
Compatible with switch installation as standard.

High-speed packing
A piston packing for high speed operation has been adopted.

Common port
A common port (one-side piping) or standard port (both sides piping) can be selected according to the installation location. Equipment can be downsized.

CONTENTS

Series variation	1570
Variation and option combination selection table	1572
● Double acting (SRL3)	1574
● Double acting/resin guide type (SRL3-G)	1590
● Double acting/position locking (SRL3-Q)	1604
● Double acting/resin guide/position locking (SRL3-GQ)	1614
SRL3 Series common option dimensions	1588
Configurations table	1624
Kit weight list	1627
Selection guide	1629
⚠Safety precautions	1639

The cylinder switches T2YH, T2YV, T3YH, and T3YV are scheduled for end of production at the end of December 2023.

Rodless cylinder SRL3 Series

Variation	Model No. JIS symbol	Bore size (mm)	Standard stroke (mm) 200	300	400	500	600	700	800	900	1000	Min. stroke (mm)	Max. stroke (mm)
Double acting/ standard	SRL3 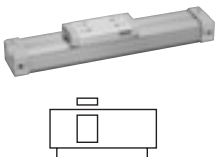	ø12 equivalent/ø16 equivalent/ø20 equivalent	●	●	●	●	●	●	●	●	●	1	5000
		ø25 or equiv.	●	●	●	●	●	●	●	●	●		5000
		ø32 or equiv.	●	●	●	●	●	●	●	●	●		5000
		ø40 equivalent/ø50 equivalent/ø63 equivalent	●	●	●	●	●	●	●	●	●		5000
		ø80 equivalent/ø100 equivalent	●	●	●	●	●	●	●	●	●		5000
Double acting/ resin guide	SRL3-G 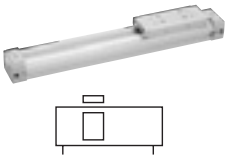	ø12 equivalent/ø16 equivalent/ø20 equivalent	●	●	●	●	●	●	●	●	●	1	5000
		ø25 or equiv.	●	●	●	●	●	●	●	●	●		5000
		ø32 or equiv.	●	●	●	●	●	●	●	●	●		5000
		ø40 equivalent/ø50 equivalent/ø63 equivalent	●	●	●	●	●	●	●	●	●		5000
		ø80 equivalent/ø100 equivalent	●	●	●	●	●	●	●	●	●		5000
Double acting/ position locking	SRL3-Q	ø12 equivalent/ø16 equivalent/ø20 equivalent	●	●	●	●	●	●	●	●	●	5	5000
		ø25 or equiv.	●	●	●	●	●	●	●	●	●		5000
		ø32 or equiv.	●	●	●	●	●	●	●	●	●		5000
		ø40 equivalent/ø50 equivalent/ø63 equivalent	●	●	●	●	●	●	●	●	●		5000
		ø80 equivalent/ø100 equivalent	●	●	●	●	●	●	●	●	●		5000
Double acting/ position locking Resin guide	SRL3-GQ	ø12 equivalent/ø16 equivalent/ø20 equivalent	●	●	●	●	●	●	●	●	●	5	5000
		ø25 or equiv.	●	●	●	●	●	●	●	●	●		5000
		ø32 or equiv.	●	●	●	●	●	●	●	●	●		5000
		ø40 equivalent/ø50 equivalent/ø63 equivalent	●	●	●	●	●	●	●	●	●		5000
		ø80 equivalent/ø100 equivalent	●	●	●	●	●	●	●	●	●		5000

●: Standard, ◎: Option, ○: Made to order, ▒ : Not available

	Custom stroke (per mm)	Mounting				Cushion				Option										Switch	Page
		Basic	Axial foot	Axial foot	Axial foot	Both sides cushioned	R side cushioned	L side cushioned	Without cushion	Both-sides full stroke adjustable, shock absorber	R side full stroke adjustable, shock absorber	L side full stroke, adjustable, shock absorber	Full stroke adjustable, adjusting bracket to be added	Floating fitting	Thin floating fitting	Intermediate support bracket for 00, LB	Intermediate support bracket for LB1	Larger thread for table installation	Height adjustment plate		
		00	LB	LB1	LJ	B	R	L	N	A	A1	A2	A3	Y	Y1	L*	N*	H	U		
	1	●	●	●	▒	●	●	●	●	◎	◎	◎	◎	◎	◎	◎	◎	◎	◎	◎	1574
		●	●	●	▒	●	●	●	●	◎	◎	◎	◎	◎	◎	◎	◎	▒	◎		
		●	●	●	▒	●	●	●	●	◎	◎	◎	▒	◎	◎	◎	◎	▒	◎		
		●	●	▒	▒	●	●	●	●	◎	◎	◎	▒	◎	◎	◎	▒	▒	◎		
		●	●	▒	▒	●	●	●	●	◎	◎	◎	▒	◎	▒	◎	▒	▒	◎		
	1	●	●	●	▒	●	●	●	●	◎	◎	◎	◎	▒	▒	◎	◎	◎	◎	◎	1590
		●	●	●	▒	●	●	●	●	◎	◎	◎	◎	▒	▒	◎	◎	▒	◎		
		●	●	●	▒	●	●	●	●	◎	◎	◎	▒	▒	▒	◎	▒	▒	◎		
		●	●	▒	▒	●	●	●	●	◎	◎	◎	▒	▒	▒	◎	▒	▒	◎		
		●	●	▒	▒	●	●	●	●	◎	◎	◎	▒	▒	▒	◎	▒	▒	◎		
	1	●	●	●	▒	●	●	●	●	◎	◎	◎	◎	◎	○	◎	◎	◎	◎	◎	1604
		●	●	●	▒	●	●	●	●	◎	◎	◎	◎	◎	○	◎	◎	▒	◎		
		●	●	●	▒	●	●	●	●	◎	◎	◎	▒	◎	▒	◎	◎	▒	◎		
		●	●	▒	▒	●	●	●	●	◎	◎	◎	▒	◎	▒	◎	▒	▒	◎		
		●	●	▒	▒	●	●	●	●	◎	◎	◎	▒	◎	▒	◎	▒	▒	◎		
	1	●	●	●	▒	●	●	●	●	◎	◎	◎	◎	▒	▒	◎	◎	◎	◎	◎	1614
		●	●	●	▒	●	●	●	●	◎	◎	◎	◎	▒	▒	◎	◎	▒	◎		
		●	●	●	▒	●	●	●	●	◎	◎	◎	▒	▒	▒	◎	◎	▒	◎		
		●	●	▒	▒	●	●	●	●	◎	◎	◎	▒	▒	▒	◎	▒	▒	◎		
		●	●	▒	▒	●	●	●	●	◎	◎	◎	▒	▒	▒	◎	▒	▒	◎		

Variation and option combination selection table

●: Standard
◎: Option
○: Available (made-to-order product)
△: Available depending on conditions (Contact CKD)
x: Not available

Category		Category	Variation				Port thread			Option										
			Double acting basic	Resin guide type	Position locking		NPT	G		Stroke adjustable Both sides	Stroke adjustable R side	Stroke adjustable L side	Stroke adjustable with retrofitted adjusting bracket	Larger thread for table installation	Port/cushion needle position specification	Port/cushion needle position specification	Port/cushion needle position specification	Port/cushion needle position specification	Port/cushion needle position specification	Port/cushion needle position specification
		Code	None	G	Q		N	G		A	A1	A2	A3	H	R	B	T	D	S	X
Variation	Double acting basic	Blank					○	○		◎	◎	◎	◎	◎	◎	◎	◎	◎	◎	◎
Variation	Resin guide type	G			◎		○	○		◎	◎	◎	◎	◎	◎	◎	◎	◎	◎	◎
Variation	Position locking	Q					○	○		◎	◎	◎	◎	◎	◎	◎	◎	◎	◎	◎
Port thread	NPT	N						x		○	○	○	○	○	○	○	○	○	○	○
Port thread	G	G								○	○	○	○	○	○	○	○	○	○	○
Option	Stroke adjustable Both sides	A									x	x	x	◎	◎	◎	◎	◎	◎	◎
Option	Stroke adjustable R side	A1										x	x	◎	◎	◎	◎	◎	◎	◎
Option	Stroke adjustable L side	A2											x	◎	◎	◎	◎	◎	◎	◎
Option	Stroke adjustable with retrofitted adjusting bracket	A3												◎	◎	◎	◎	◎	◎	◎
Option	Larger thread for table installation	H													◎	◎	◎	◎	◎	◎
Option	Port/cushion needle position specification	R														x	x	x	x	x
Option	Port/cushion needle position specification	B															x	x	x	x
Option	Port/cushion needle position specification	T																x	x	x
Option	Port/cushion needle position specification	D																	x	x
Option	Port/cushion needle position specification	S																		x
Option	Port/cushion needle position specification	X																		
Accessory	Cylinder switch		◎	◎	◎		○	○		◎	◎	◎	◎	◎	◎	◎	◎	◎	◎	◎
Accessory	Floating fitting	Y	◎	x	◎		○	○		◎	◎	◎	◎	△	◎	◎	◎	◎	◎	◎
Accessory	Thin floating fitting	Y1	◎	x	*1		○	○		○	○	○	○	△	◎	◎	◎	◎	◎	◎
Accessory	Intermediate support bracket (for 00, LB)	L	◎	◎	◎		○	○		◎	◎	◎	◎	◎	◎	◎	◎	◎	◎	◎
Accessory	Intermediate support bracket (for LB1)	N	◎	◎	◎		○	○		◎	◎	◎	◎	◎	◎	◎	◎	◎	◎	◎
Accessory	With height adjustment plate	U	◎	◎	◎		○	○		◎	◎	◎	◎	△	◎	◎	◎	◎	◎	◎

*1: Available "○" (as made to order) for ø25 or less.

[Example of model No.]

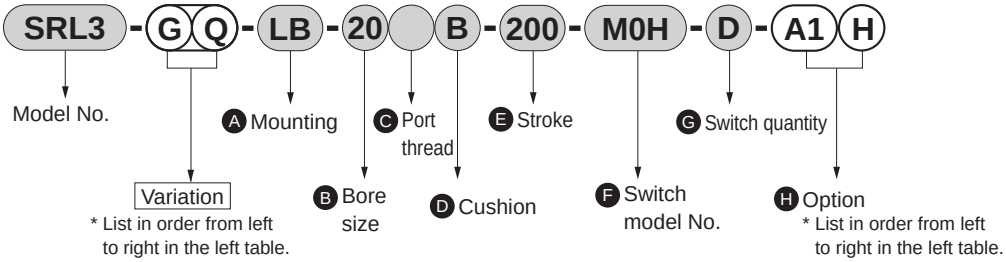

Model No.: Rodless cylinder

● Variations: Resin guide type, position locking

A	Mounting	: Axial foot
B	Bore size	: ø20 mm
C	Port thread	: Rc thread
D	Cushion	: Both sides cushioned
E	Stroke	: 200 mm
F	Switch model No.	: Reed MOH switch, lead wire 1m
G	Switch quantity	: 2
H	Option	: R side only full stroke adjustable, with shock absorber, larger table mounting thread

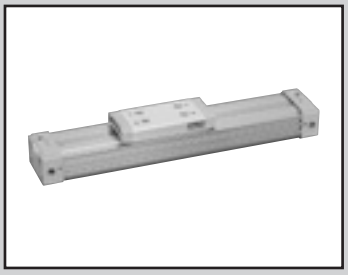

Rodless cylinder double acting

SRL3 Series

● Bore size: ø12, ø16, ø20, ø25, ø32
ø40, ø50, ø63, ø80, ø100 or equiv.

JIS symbol

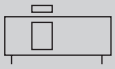

RoHS CAD

Specifications

Item	SRL3									
Bore size mm	ø12	ø16	ø20	ø25	ø32	ø40	ø50	ø63	ø80	ø100
Actuation	Double acting									
Working fluid	Compressed air									
Max. working pressure MPa	0.7 (≈100 psi, 7 bar)									
Min. working pressure MPa	0.2 (≈29 psi, 2 bar)			0.1 (≈15 psi, 1 bar)				0.05 (≈7.3 psi, 0.5 bar)		
Proof pressure MPa	1.05 (≈150 psi, 10.5 bar)									
Ambient temperature °C	5 (41°F) to 60 (140°F)									
Port size	M5		Rc1/8		Rc1/4		Rc3/8		Rc1/2	
Stroke tolerance mm	$^{+2.0}_{0}$ (to 1000), $^{+2.5}_{0}$ (to 3000), $^{+3.0}_{0}$ (to 5000)									
Working piston speed mm/s	50 to 2000 (standard piping) (*1)									
Cushion	Air cushion									
Lubrication	Not required (use turbine oil class 1 ISO VG32 if necessary for lubrication. Once lubricated, the cylinder will need periodic lubrication.)									

*1: For common port piping, the working piston speed varies depending on the stroke. Contact CKD.

Allowable absorbed energy

Bore size (mm)	Cushioned		Without cushion	With shock absorber (initial set point)	
	Max absorbed energy (J)	Cushion stroke (mm)	Max absorbed energy (J)	Absorbed energy (J)	Effective stroke (mm)
ø12 or equiv.	0.03	14.5	0.003	2.4	5.5
ø16 or equiv.	0.22	19.2	0.007	2.4	5.5
ø20 or equiv.	0.59	22.2	0.010	5.7	7
ø25 or equiv.	1.40	20.9	0.015	10	9
ø32 or equiv.	2.57	23.5	0.030	18	13
ø40 or equiv.	4.27	23.9	0.050	50	16.5
ø50 or equiv.	9.13	24.9	0.072	86	21
ø63 or equiv.	17.4	29.6	0.138	86	21
ø80 or equiv.	40	45.8	0.393	143	25
ø100 or equiv.	67	45.8	0.622	143	25

Stroke

Bore size (mm)	Standard stroke (mm)	Max. stroke (mm)	Min. stroke (mm)
ø12 or equiv. ø16 or equiv. ø20 or equiv. ø25 or equiv. ø32 or equiv. ø40 or equiv. ø50 or equiv. ø63 or equiv. ø80 or equiv. ø100 or equiv.	200/300 400/500 600/700 800/900 1000	5000	1

* The custom stroke is available in 1 mm increments.

Number of installed M-switches and min. stroke (mm)

Switch quantity	1		2		3		4		5		6	
Switch model No. / Bore size (mm)	M*V	M*H	M*V	M*H	M*V	M*H	M*V	M*H	M*V	M*H	M*V	M*H
ø12 or equiv.	10	10	30	45(70)	60	90(120)	90	135(170)	120	180(220)	150	225(270)
ø16 or equiv.	10	10	30	45(70)	60	90(120)	90	135(170)	120	180(220)	150	225(270)
ø20 or equiv.	10	10	30	45(70)	60	90(120)	90	135(170)	120	180(220)	150	225(270)
ø25 or equiv.	10	10	30	45(70)	60	90(120)	90	135(170)	120	180(220)	150	225(270)
ø32 or equiv.	10	10	30	45	60	90	90	135	120	180	150	225
ø40 or equiv.	10	10	30	45	60	90	90	135	120	180	150	225
ø50 or equiv.	15	15	30	45	60	90	90	135	120	180	150	225
ø63 or equiv.	15	15	30	45	60	90	90	135	120	180	150	225
ø80 or equiv.	25		50		100		150		200		250	
ø100 or equiv.	25		50		100		150		200		250	

Note: Values in ( ) are the min. stroke with switch of the full stroke adjustable.

Number of installed T-switches and min. stroke (mm)

Switch quantity	1		2		3		4		5		6	
Switch model No. / Bore size (mm)	T*V	T*H	T*V	T*H	T*V	T*H	T*V	T*H	T*V	T*H	T*V	T*H
ø12 or equiv.	5	5	45	50(70)	85	100(120)	125	150(170)	165	200(220)	205	250(270)
ø16 or equiv.	5	5	45	50(70)	85	100(120)	125	150(170)	165	200(220)	205	250(270)
ø20 or equiv.	5	5	45	50(70)	85	100(120)	125	150(170)	165	200(220)	205	250(270)
ø25 or equiv.	10	10	45	50(70)	85	100(120)	125	150(170)	165	200(220)	205	250(270)
ø32 or equiv.	10	10	45	50	85	100	125	150	165	200	205	250
ø40 or equiv.	10	10	45	50	85	100	125	150	165	200	205	250
ø50 or equiv.	10	10	45	50	85	100	125	150	165	200	205	250
ø63 or equiv.	10	10	45	50	85	100	125	150	165	200	205	250
ø80 or equiv.	15	15	45	50	85	100	125	150	165	200	205	250
ø100 or equiv.	15	15	45	50	85	100	125	150	165	200	205	250

Note: Values in ( ) are the min. stroke with switch of the full stroke adjustable.

Switch specifications (M-switch)

● 1-color/2-color LED

Item	2-wire proximity		3-wire proximity		
	M2V,M2H	M2WV (2-color LED)	M3H/M3V	M3PH/M3PV (made to order)	M3WV
Applications	Dedicated for programmable controller		For programmable controller, relay, IC circuit, compact solenoid valve		
Output method	-		NPN output	PNP output	NPN output
Power supply voltage	-		4.5 to 28 VDC		10 to 28 VDC
Load voltage	10 to 30 VDC		30 VDC or less		
Load current	5 to 30 mA		100 mA or less	100 mA or less	100 mA or less
Indicator	LED (Lit when ON)	Red/green LED (Lit when ON)	LED (Lit when ON)	Yellow LED (Lit when ON)	Red/green LED (Lit when ON)
Leakage current	1 mA or less		10 μA or less	0.05 mA or less	10 μA or less
Weight g	1 m:22 3 m:57 5 m:93				

Item	2-wire reed			
	M0V,M0H		M5V,M5H	
Applications	Programmable controller, relay		For programmable controller, relay, IC circuit (without indicator lamp), serial connection	
Power supply voltage	-		-	
Load voltage	12/24 VDC	110 VAC	5/12/24 VDC	110 VAC or less
Load current	5 to 50 mA	7 to 20 mA	50 mA or less	20 mA or less
Indicator	LED (Lit when ON)		No indicator lamp	
Leakage current	0 mA			
Weight g	1 m:22 3 m:57 5 m:93			

*1: Refer to Ending Page 1 for detailed switch specifications and dimensions.

Switch specifications (T-switch)

● 2-color LED

Item	2-wire proximity		3-wire proximity	
	T2YH/T2YV	T2WH/T2WV	T3YH/T3YV	T3WH/T3WV
Applications	Dedicated for programmable controller		For programmable controller, relay	
Output method	-		NPN output	NPN output
Power supply voltage	-		10 to 28 VDC	
Load voltage	10 to 30 VDC	24 VDC ±10%	30 VDC or less	
Load current	5 to 20 mA(*3)		50 mA or less	
Indicator	Red/green LED (Lit when ON)	Red/green LED (Lit when ON)	Red/green LED (Lit when ON)	Red/green LED (Lit when ON)
Leakage current	1 mA or less		10 μA or less	
Weight g	1 m:33 3 m:87 5 m:142	1 m:18 3 m:49 5 m:80	1 m:33 3 m:87 5 m:142	1 m:18 3 m:49 5 m:80

● For AC magnetic field

Item	Proximity switch
	T2YD, T2YDT (*4)
Applications	Dedicated for programmable controller
Indicator	Red/green LED (Lit when ON)
Load voltage	24 VDC ±10%
Load current	5 to 20 mA
Internal voltage drop	6V or less
Leakage current	1.0 mA or less
Weight g	1 m:61 3 m:166 5 m:272

*1 : Refer to Ending Page 1 for detailed switch specifications and dimensions.
*2 : Switches other than the above models, such as switches with connectors, are also available. Refer to Ending Page 1.
*3 : The max. load current is 20 mA at 25°C. The current is lower than 20 mA if the operating ambient temperature around the switch is higher than 25°C. (5 to 10 mA at 60°C)
*4 : AC magnetic field proof switch (T2YD/T2YDT) cannot be used in DC magnetic field.

Cylinder weight

Unit: kg

Bore size (mm)	Weight for 0 mm stroke				Mounting bracket weight		Additional weight per St = 100mm
	Basic (00)	Foot (LB)	Foot (LB1)	Switch weight	T type	M type	
ø12 or equiv.	0.24	0.25	0.26	Refer to the weight in the switch specifications.	0.005	0.001	0.10
ø16 or equiv.	0.32	0.33	0.35				0.13
ø20 or equiv.	0.52	0.54	0.58				0.18
ø25 or equiv.	1.0	1.1	1.1				0.28
ø32 or equiv.	1.5	1.6	1.7				0.36
ø40 or equiv.	2.4	2.5	-				0.53
ø50 or equiv.	3.5	3.6	-				0.75
ø63 or equiv.	6.1	6.4	-				1.11
ø80 or equiv.	18.4	19.0	-				2.32
ø100 or equiv.	26.2	27.2	-				3.38

SCP*3
CMK2
CMA2
SCM
SCG
SCA2
SCS2
CKV2
CAV2/COVP/N2
SSD2
SSG
SSD
CAT
MDC2
MVC
SMG
MSD/MSDG
FC*
STK
SRL3
SRG3
SRM3
SRT3
MRL2
MRG2
SM-25
ShkAbs
FJ
FK
Spd Contr
Ending

How to order

No switch (built-in magnet for switch)

SRL3 - 00 - 12 ◯ B - 200 ——— B

With switch (built-in magnet for switch)

SRL3 - 00 - 12 ◯ B - 200 - M0H - R - B

Ⓐ Mounting *1, *2

Ⓑ Bore size

Ⓒ Port thread

Ⓓ Cushion

Ⓔ Stroke

Ⓕ Switch model No. *4

Ⓖ Switch quantity

Ⓗ Option *5, *6 *7, *8 *9

Code	Description
Ⓐ Mounting	
00	Basic
LB	Axial foot
LB1	Axial foot (ø12 to ø32 only)

Ⓑ Bore size (mm)	
12	ø12
16	ø16
20	ø20
25	ø25
32	ø32
40	ø40
50	ø50
63	ø63
80	ø80
100	ø100

Ⓒ Port thread	
Blank	Rc thread (M5 for ø12 and ø16)
N	NPT thread (ø20 or more) (made-to-order product)
G	G thread (ø20 or more) (made-to-order product)

Ⓓ Cushion	
B	Both sides cushioned
R	R side cushioned
L	L side cushioned
N	Without cushion

Ⓔ Stroke (mm)

Bore size	Stroke *3	Custom stroke
ø12 to ø100	**1 to 5000**	**In 1 mm increments**

Ⓕ Switch model No.

Axial lead wire	Radial lead wire	Contact	Voltage AC	Voltage DC	Indicator	Lead wire
M0H*	**M0V***	Reed	●	●	1-color LED	2-wire
M5H*	**M5V***	Reed	●	●	No indicator lamp	2-wire
M2H*	**M2V***	Proximity		●	1-color LED	
-	**M2WV***	Proximity		●	2-color LED	2-wire
M3H*	**M3V***	Proximity		●	1-color LED	
-	**M3WV***	Proximity		●	2-color LED	3-wire
M3PH*	**M3PV***	Proximity		●	1-color LED (custom)	3-wire
T2WH*	**T2WV***	Proximity		●	2-color LED	2-wire
T2YH*	**T2YV***	Proximity		●	2-color LED	2-wire
T3WH*	**T3WV***	Proximity		●	2-color LED	3-wire
T3YH*	**T3YV***	Proximity		●	2-color LED	3-wire
T2YD*	**-**	Proximity		●	2-color LED for AC magnetic field	2-wire
T2YDT*	**-**	Proximity		●	2-color LED for AC magnetic field	2-wire

*** Lead wire length**	
Blank	1 m (standard)
3	3 m (option)
5	5 m (option)

Ⓖ Switch quantity	
R	1 on R side
L	1 on L side
D	2
T	3
4	4 (when there are more than 4 switches, indicate switch quantity.)

Ⓗ Option

	Bore size (ø)	12	16	20	25	32	40	50	63	80	100
A	Both-sides full stroke adjustable, shock absorber	●	●	●	●	●	●	●	●	●	●
A1	R side full stroke adjustable, shock absorber	●	●	●	●	●	●	●	●	●	●
A2	L side full stroke, adjustable, shock absorber	●	●	●	●	●	●	●	●	●	●
A3	Full stroke adjustable, adjusting bracket to be added	●	●	●	●						
Y	Floating fitting	●	●	●	●	●	●	●	●	●	●
Y1	Thin floating fitting	●	●	●	●	●	●	●	●		
L*	Intermediate support bracket (for 00, LB)	●	●	●	●	●	●	●	●	●	●
N*	Intermediate support bracket (for LB1)	●	●	●	●	●					
H	Larger thread for table installation	●	●	●							
U	Height adjustment plate	●	●	●	●	●	●	●	●	●	●
Blank	Port position: F (Standard); Cushion needle position: F (Standard)	●	●	●	●	●	●	●	●	●	●
R	Port position: R (Common port); Cushion needle position: F	●	●	●	●	●	●	●	●	●	●
B	Port position: F; Cushion needle position: B	●	●	●	●	●	●	●	●	●	●
T	Port position: R (Common port); Cushion needle position: B	●	●	●	●	●	●	●	●	●	●
D	Port position: D; Cushion needle position: F				●	●	●	●	●	●	●
S	Port position: D; Cushion needle position: D					●	●	●	●	●	●
X	Port position: F (Common port); Cushion needle position: F									●	●

⚠ Precautions for model No. selection

*1 : Mounting bracket will be shipped assembled with the product.
*2 : For 12, 16, 20, 25 and 32 bore sizes with option code "R" or "T", the mounting will be "00" or "LB1". (Piping with "LB" is not possible for option codes "R" and "T".)
*3 : Refer to page 1574 for the min. stroke with switch.
*4 : Switches other than Ⓕ Switch model No. are also available. (Made to order) Refer to Ending Page 1 for details.
5 : "" of L* and N* indicates the number of sets. When more than one set are necessary, specify "L2" (for LB) or "N2" (for LB1). 2 pcs./set
*6 : For the port and cushion needle position codes, refer to dimensions on pages 1582 to 1587.
*7 : In the case of the standard with ø12 to ø25, remove the cover, attach a flat nut and install the full stroke adjusting bracket. A flat nut is attached to option "A3" to enable retrofitting the full stroke adjusting bracket without removing the cover.
*8 : In "H", the thread size for ø12 and ø16 will be "M4" and that for ø20 will be "M5".
*9 : Check the option combinations in "Option selection table" on the next page.
*10 : Copper and PTFE free as standard. (Except for type with shock absorber)

[Example of model No.]

SRL3-00-12B-200-M0H-R-B

Model: Rodless cylinder

Ⓐ Mounting	:	Basic
Ⓑ Bore size	:	ø12 mm
Ⓒ Port thread	:	M5
Ⓓ Cushion	:	Both sides cushioned
Ⓔ Stroke	:	200 mm
Ⓕ Switch model No.	:	Reed M0H switch, lead wire 1 m
Ⓖ Switch quantity	:	1 on R side
Ⓗ Option	:	Port position F, cushion needle position B

Option selection table

●: Available ■: Not available

	Code	A	A1	A2	A3	Y	Y1	L*	N*	H	U	Blank	R	B	T	D	S	X
		Both side full stroke adjustable, with shock absorber	R side full stroke adjustable, with shock absorber	L side full stroke adjustable, with shock absorber	Full stroke adjustable with adjusting bracket to be added later	Floating fitting	Thin floating fitting	Intermediate support bracket (for 00, LB)	Intermediate support bracket (for LB1)	Larger thread for table installation	Height adjustment plate	Port position F, cushion needle position F (standard)	Port position R, cushion needle position F (common port)	Port position F, cushion needle position B	Port position R, cushion needle position B (common port)	Port position D, cushion needle position F	Port position D, cushion needle position D	Port position F, cushion needle position F (common port)
Option	A					●	●	●	●	●	●	●	●	●	●	●	●	●
	A1					●	●	●	●	●	●	●	●	●	●	●	•	•
	A2					●	●	●	●	●	●	●	●	●	●	●	●	●
	A3					●	●	●	●	●	●	●	•	●	●	●	●	
	Y							●	●			●	●	●	●	●	●	●
	Y1							●	●			●	●	●	●	●	●	
	L*									●	●	●	●	●	●	●	●	●
	N*									●	●	●	●	●	●	●	●	
	H											●	●	●	●	●	●	
	U											●	●	●	●	●	●	●
	Blank																	
	R																	
	B																	
	T																	
	D																	
	S																	
	X																	

*1 : Some combinations are not available depending on the bore size. Be sure to check the Ⓗ Option in "How to order" on the previous page.
*2 : LB1 with port position D is not possible. (ø25, ø32)

Specifications for rechargeable battery

(Catalog No. CC-1226A)

● Design compatible with rechargeable battery manufacturing process

SRL3 - ····· - P4*

Theoretical thrust table

(Unit: N)

Bore size (mm)	Operating direction	Working pressure MPa 0.05	0.1	0.2	0.3	0.4	0.5	0.6	0.7
ø12	Push/Pull	–	–	27.7	41.5	55.3	69.1	83.0	96.8
ø16	Push/Pull	–	–	43.2	64.8	86.4	1.08×10^2	1.30×10^2	1.51×10^2
ø20	Push/Pull	–	–	62.9	94.4	1.26×10^2	1.57×10^2	1.89×10^2	2.20×10^2
ø25	Push/Pull	–	54.2	1.08×10^2	1.63×10^2	2.17×10^2	2.71×10^2	3.25×10^2	3.80×10^2
ø32	Push/Pull	–	81.4	1.63×10^2	2.44×10^2	3.26×10^2	4.07×10^2	4.88×10^2	5.70×10^2
ø40	Push/Pull	–	1.27×10^2	2.53×10^2	3.80×10^2	5.06×10^2	6.33×10^2	7.60×10^2	8.86×10^2
ø50	Push/Pull	–	1.99×10^2	3.98×10^2	5.96×10^2	7.95×10^2	9.94×10^2	1.19×10^3	1.39×10^3
ø63	Push/Pull	1.57×10^2	3.14×10^2	6.27×10^2	9.41×10^2	1.25×10^3	1.57×10^3	1.88×10^3	2.20×10^3
ø80	Push/Pull	2.53×10^2	5.06×10^2	1.01×10^3	1.52×10^3	2.03×10^3	2.53×10^3	3.04×10^3	3.54×10^3
ø100	Push/Pull	3.96×10^2	7.91×10^2	1.58×10^3	2.37×10^3	3.16×10^3	3.95×10^3	4.74×10^3	5.53×10^3

SCP*3
CMK2
CMA2
SCM
SCG
SCA2
SCS2
CKV2
CAV2/COVP/N2
SSD2
SSG
SSD
CAT
MDC2
MVC
SMG
MSD/MSDG
FC*
STK
SRL3
SRG3
SRM3
SRT3
MRL2
MRG2
SM-25
ShkAbs
FJ
FK
Spd Contr
Ending

How to order switch (For configurations, refer to pages 1624 to 1626)

● Switch body + mounting bracket set (*1)

SRL3 - M0H*

Switch model No.
(Item Ⓕ on page 1576)

● Switch body only

SW - M0H*

Switch model No.
(Item Ⓕ on page 1576)

* Lead wire length	
Blank	1 m (standard)
3	3 m (option)
5	5 m (option)

* indicates lead wire length.

● Mounting bracket set (*2)

· M-switch

SRL3 - M

· T-switch

SRL3 - T

● Lead wire holder (*3)

SRL3 - MH

*1 : "Switch body + mounting bracket set" does not include lead wire holders. Order lead wire holders separately if necessary.
*2 : The mounting bracket is different between the M-switch and T-switch.
*3 : The quantity of lead wire holders per set is 10.

● How to order discrete shock absorber

SRL3 - 40 - NCK

Bore size
(Item Ⓑ on page 1576)

(One shock absorber, one shock absorber fixing hexagon nut)
(Note) The shock absorber fixing hexagon nut for SRL3-40 is a made-to-order product.

Applicable shock absorber model No.

Model	Shock absorber model No.
SRL3-12	NCK-00-0.3-C
SRL3-16	NCK-00-0.3-C
SRL3-20	NCK-00-0.7-C
SRL3-25	NCK-00-1.2
SRL3-32	NCK-00-2.6
SRL3-40	NCK-00-7
SRL3-50	NCK-00-12
SRL3-63	NCK-00-12
SRL3-80	NCK-00-20
SRL3-100	NCK-00-20

● How to order floating fitting set

SRL3 - 40 - Y

Bore size
(Item Ⓑ on page 1576)
(Mount, mount base, pin, plain washer, pan head machine screw with spring washer, four mounting bolts)

● How to order discrete intermediate support bracket

For 00/LB

SRL3 - 40 - L (2/set)

Bore size
(Item Ⓑ on page 1576)

For LB1

SRL3 - 32 - N (2/set)

Bore size
(Item Ⓑ on page 1576)

● How to order full stroke adjusting bracket kit

SRL3 - 40 - A1 (1 set)

Bore size
(Item Ⓑ on page 1576)

(For configurations, refer to "Full stroke adjusting bracket kit" on page 1625.)

● How to order repair parts

SRL3 - 40 K - 200

Bore size (Item Ⓑ on page 1576)
Stroke (Item Ⓔ on page 1576)

● How to order mounting bracket

SRL3 - LB - 40

Mounting (Item Ⓐ on page 1576)
Bore size (Item Ⓑ on page 1576)
(Bracket x2, mounting bolt x4)

● How to order height adjustment plate set

SRL3 - 40 - U

Bore size
(Item Ⓑ on page 1576)
(Plate, mounting bolt x4)

Internal structure and parts list

● ø12 to ø40 equiv.

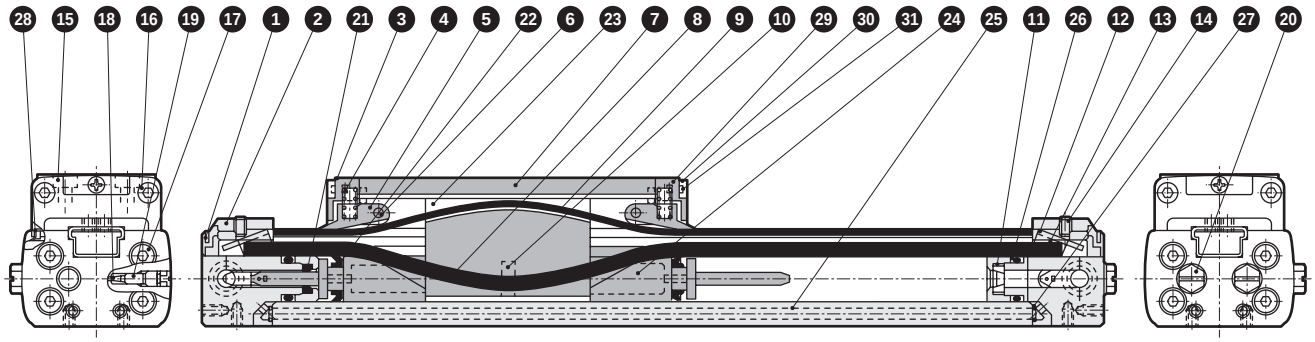

Parts list

No.	Part name	Material	Remarks	No.	Part name	Material	Remarks
1	Belt cover	Polyamide		18	Needle gasket	Nitrile rubber	
2	Cover (L)	Aluminum alloy	Baking finish	19	Cushion needle	Steel	Zinc chromate
3	Table cover	Acetal resin		20	Plug (ø12, ø16)	Copper alloy	Nickeling
4	Spring	Steel	Black finish		Plug (ø20 to ø40)	Steel	Zinc chromate
5	Belt holder	Acetal resin		21	Cushion packing	Urethane rubber	
6	Parallel pin (ø12 to ø20)	Stainless steel		22	Piston packing	Nitrile rubber	
	Shaft (ø25 to ø40)	Steel	Zinc chromate	23	Yoke	Aluminum alloy	Alumite
7	Table	Aluminum alloy	Alumite	24	Piston	Acetal resin	
8	Seal belt	Urethane rubber		25	Cylinder tube	Aluminum alloy	Alumite
9	Dust-proof belt	Stainless steel + nitrile rubber		26	Cylinder gasket	Nitrile rubber	
10	Magnet			27	O-ring for common port	Nitrile rubber	
11	Cushion adaptor	Acetal resin		28	Dust wiper	Acetal resin	
12	Cover (R)	Aluminum alloy	Baking finish	29	Double-sided tape		
13	Belt spacer	Steel	Zinc chromate	30	Plate	Stainless steel (ø12 to ø20)	
14	Hexagon socket set screw	Alloy steel	Zinc chromate			Alloy steel (ø25 to ø40)	Zinc chromate
15	Hexagon socket head cap screw	Alloy steel	Zinc chromate	31	Cross-recessed tapping screw	Stainless steel	
16	Hexagon socket head cap screw	Stainless steel					
17	Hexagon socket head cap screw	Alloy steel	Zinc chromate				

Repair parts list

Bore size (mm)	Kit No.	Repair parts No.
ø12 or equiv.	SRL3-12K-*	
ø16 or equiv.	SRL3-16K-*	
ø20 or equiv.	SRL3-20K-*	8 9 18 21 22 26 27 28
ø25 or equiv.	SRL3-25K-*	
ø32 or equiv.	SRL3-32K-*	
ø40 or equiv.	SRL3-40K-*	

Note: Specify the kit No. when placing an order.
Specify the stroke for *.

SCP*3
CMK2
CMA2
SCM
SCG
SCA2
SCS2
CKV2
CAV2/COVP/N2
SSD2
SSG
SSD
CAT
MDC2
MVC
SMG
MSD/MSDG
FC*
STK
SRL3
SRG3
SRM3
SRT3
MRL2
MRG2
SM-25
ShkAbs
FJ
FK
Spd Contr
Ending

Internal structure and parts list

● ø50 to ø63 or equiv.

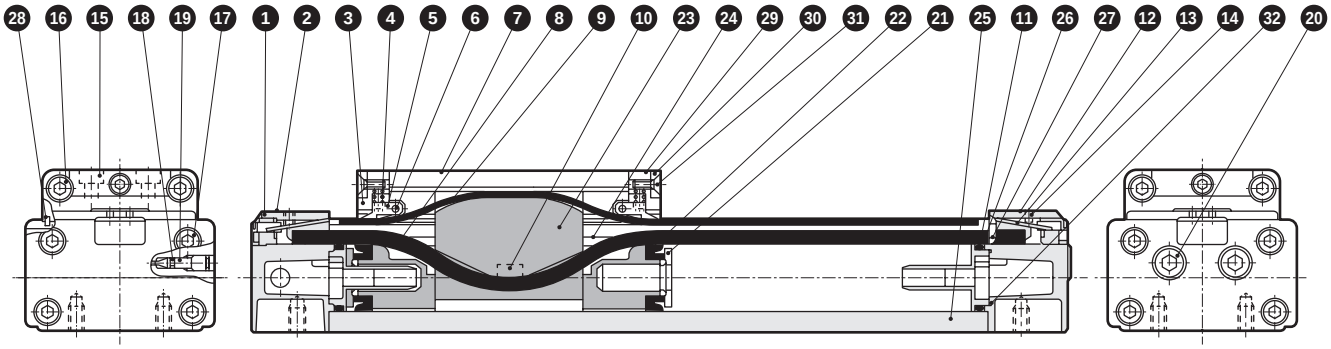

Parts list

No.	Part name	Material	Remarks	No.	Part name	Material	Remarks
1	Belt cover	Polyamide		17	Hexagon socket head cap screw	Alloy steel	Zinc chromate
2	Cover (L)	Aluminum alloy	Baking finish	18	Needle gasket	Nitrile rubber	
3	Table cover	Acetal resin		19	Cushion needle	Steel	Zinc chromate
4	Spring	Steel	Black finish	20	Plug	Steel	Zinc chromate
5	Belt holder	Acetal resin		21	Cushion packing	Urethane rubber	
6	Shaft	Steel	Zinc chromate	22	Piston packing	Nitrile rubber	
7	Table	Aluminum alloy	Alumite	23	Yoke	Aluminum alloy	Alumite
8	Seal belt	Urethane rubber		24	Piston	Acetal resin	
9	Dust-proof belt	Stainless steel + nitrile rubber		25	Cylinder tube	Aluminum alloy	Alumite
10	Magnet			26	Cylinder gasket	Nitrile rubber	
11	Cushion ring	Acetal resin		27	O-ring for common port	Nitrile rubber	
12	Cover (R)	Aluminum alloy	Baking finish	28	Dust wiper	Acetal resin	
13	Belt spacer	Steel	Zinc chromate	29	Double-sided tape		
14	Hexagon socket set screw	Alloy steel	Zinc chromate	30	Plate	Alloy steel	Zinc chromate
15	Hexagon socket head cap screw	Alloy steel	Zinc chromate	31	Cross-recessed tapping screw	Stainless steel	
16	Hexagon socket head cap screw	Stainless steel		32	Cushion ring gasket	Nitrile rubber	

Repair parts list

Bore size (mm)	Kit No.	Repair parts No.
ø50 or equiv.	SRL3-50K-*	8 9 18 21 22
ø63 or equiv.	SRL3-63K-*	26 27 28 32

Note: Specify the kit No. when placing an order. Specify the stroke for *.

Internal structure and parts list

● ø80 to ø100 or equiv.

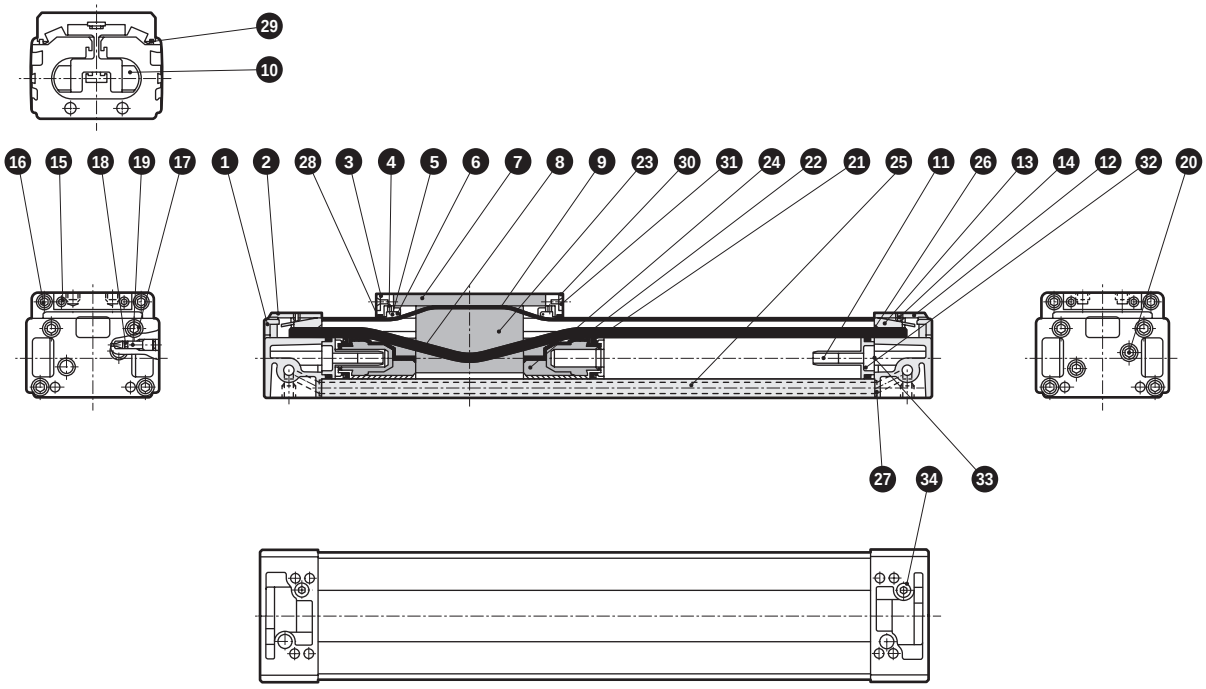

Parts list

No.	Part name	Material	Remarks	No.	Part name	Material	Remarks
1	Belt cover	Polyamide		18	Needle gasket	Nitrile rubber	
2	Cover (L)	Aluminum alloy	Baking finish	19	Cushion needle	Steel	Zinc chromate
3	Table cover	Acetal resin		20	Plug	Steel	Zinc chromate
4	Spring	Steel	Black finish	21	Cushion packing	Urethane rubber	
5	Belt holder	Acetal resin		22	Piston packing	Nitrile rubber	
6	Shaft	Steel	Zinc chromate	23	Yoke	Aluminum alloy	Alumite
7	Table	Aluminum alloy	Alumite	24	Piston	Acetal resin	
8	Seal belt	Urethane rubber		25	Cylinder tube	Aluminum alloy	Alumite
9	Dust-proof belt	Stainless steel + nitrile rubber		26	Cylinder gasket	Nitrile rubber	
10	Magnet			27	O-ring for common port	Nitrile rubber	
11	Cushion ring	Acetal resin		28	Felt (1)	Wool	
12	Cover (R)	Aluminum alloy	Baking finish	29	Felt (2)	Wool	
13	Belt spacer	Steel	Zinc chromate	30	Plate	Alloy steel	Zinc chromate
14	Hexagon socket set screw	Alloy steel	Zinc chromate	31	Cross-recessed tapping screw	Stainless steel	
15	Hexagon socket head cap screw	Alloy steel	Zinc chromate	32	Cushion ring gasket (1)	Nitrile rubber	
16	Hexagon socket head cap screw	Stainless steel		33	Cushion ring gasket (2)	Nitrile rubber	
17	Hexagon socket head cap screw	Alloy steel	Zinc chromate	34	Plug	Steel	Zinc chromate

Repair parts list

Bore size (mm)	Kit No.	Repair parts No.
ø80 or equiv.	SRL3-80K-*	8 9 18 21 22 26 27 28 29 32 33
ø100 or equiv.	SRL3-100K-*	

Note: Specify the kit No. when placing an order. Specify the stroke for *.

SCP*3
CMK2
CMA2
SCM
SCG
SCA2
SCS2
CKV2
CAV2/COVP/N2
SSD2
SSG
SSD
CAT
MDC2
MVC
SMG
MSD/MSDG
FC*
STK
SRL3
SRG3
SRM3
SRT3
MRL2
MRG2
SM-25
ShkAbs
FJ
FK
Spd Contr
Ending

Dimensions (ø12 to ø20 equiv.)

● With cylinder switch SRL3-**-**-***-M*V* (L-shaped lead wire)

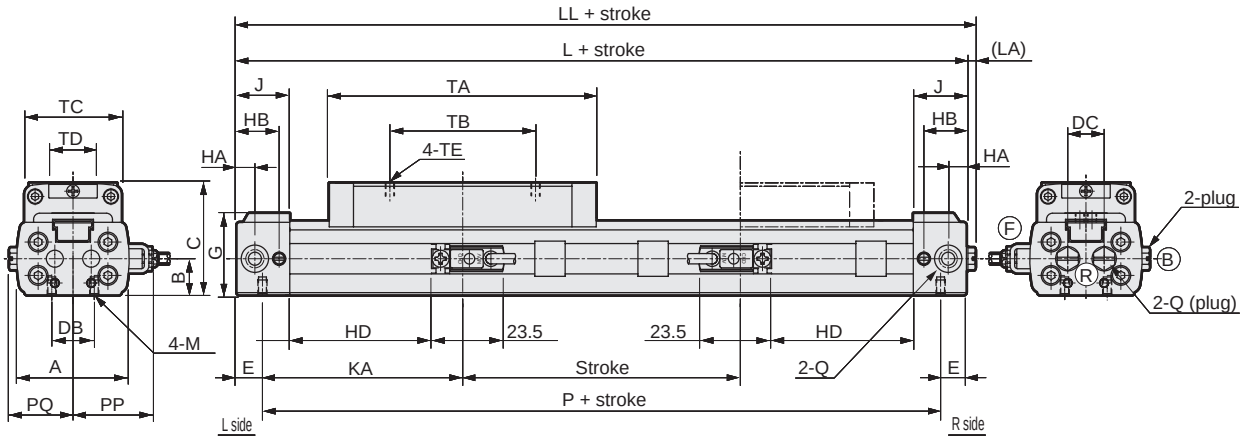

● With cylinder switch SRL3-**-**-***-M*H* (straight lead wire)

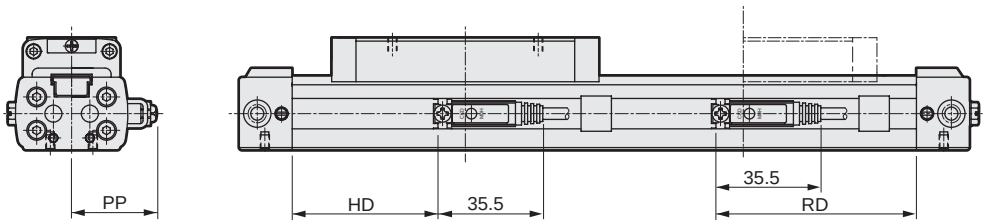

● With cylinder switch SRL3-**-**-***-T*H (T*W, T*Y, T2YD)

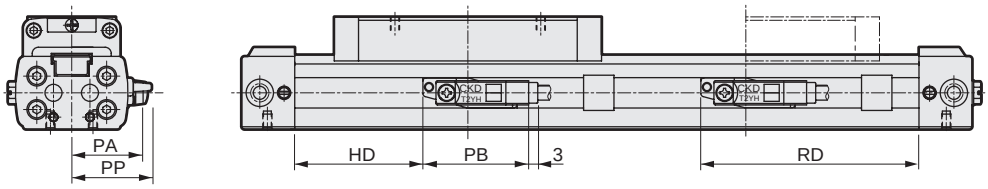

● With cylinder switch SRL3-**-**-***-T*V (T*W, T*Y)

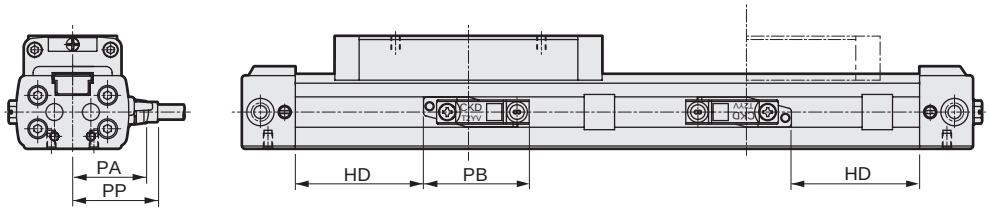

RD: Max. sensitivity installation position HD: Max. sensitivity installation position

Code / Bore size (mm)	A	B	C	DB	DC	E	G	HA	HB	J	KA	L	LL	LA	M	P	PQ	Q	TA	TB	TC	TD	TE
ø12 or equiv.	33	10.5	33	10	11	8.5	24	6	14	17.5	59.5	136	139	3	M3 depth 5	119	19	M5	81	42	29	13	M3 depth 5
ø16 or equiv.	37	12	37	14	12	8.5	27	6	14	17.5	66	149	152	3	M3 depth 5	132	21	M5	88	48	32	15	M3 depth 5
ø20 or equiv.	44	14	42	16	16	10.5	31	8.5	18.5	22	74	169	171.5	2.5	M4 depth 6.5	148	24.5	Rc1/8	100	60	38	18	M4 depth 6

Code	With switch															
Bore size (mm)	HD			RD			PA	PB			PP					
	M*	T*Y*	T*W	M*	T*Y*	T*W		T*Y*	T2YD	T*W*	M*V	M*H	T*YV	T*YH	T2YD	T*WV	T*WH
ø12 or equiv.	40.5	36	32	60.5	65	69	24.3	35	34	33.5	24.5	24.5	26	23	28.4	20.7	17.2
ø16 or equiv.	47	42	38	67	72	76	26.3	35	34	33.5	26.5	26.5	28	25	30.4	22.7	19.2
ø20 or equiv.	52.5	48	44	72.5	77	81	29.3	35	34	33.5	29.5	29.5	31	28	33.4	25.7	22.2

*1: For dimensions with options and dimensions of accessories, refer to pages 1588, 1589, 1622 and 1623.

Dimensions (ø12 to ø20 equiv.)

● With foot bracket SRL3-LB-12 to 20

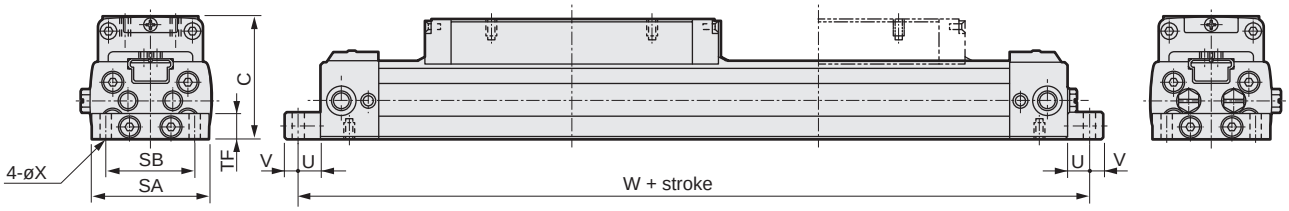

● With foot bracket SRL3-LB1-12 to 20

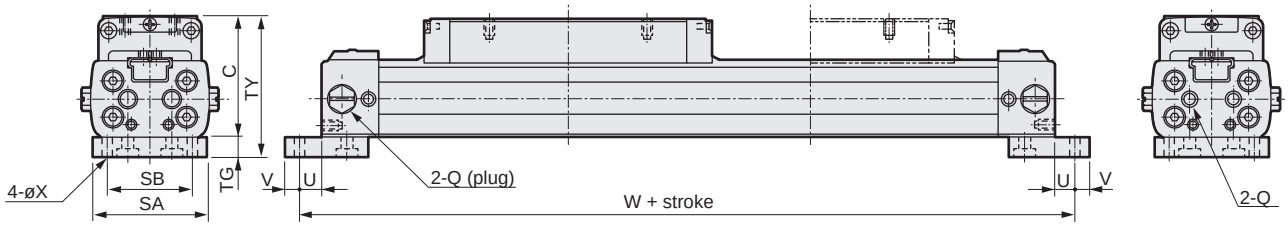

Code	With foot bracket (LB)							With foot bracket (LB1)							
Bore size (mm)	SA	SB	TF	U	V	W	X	SA	SB	TG	TY	U	V	W	X
ø12 or equiv.	32	24	8	6	4	148	3.4	32	24	6	39	6	4	148	3.4
ø16 or equiv.	35	26	8	6	4	161	3.4	35	26	6	43	6	4	161	3.4
ø20 or equiv.	43	33	10	6	6	181	4.5	43	33	8	50	6	6	181	4.5

SCP*3
CMK2
CMA2
SCM
SCG
SCA2
SCS2
CKV2
CAV2/COVP/N2
SSD2
SSG
SSD
CAT
MDC2
MVC
SMG
MSD/MSDG
FC*
STK
SRL3
SRG3
SRM3
SRT3
MRL2
MRG2
SM-25
ShkAbs
FJ
FK
Spd Contr
Ending

Dimensions (ø25 to ø63 equiv.)

● With cylinder switch SRL3-**-**-***-M*V* (L-shaped lead wire)

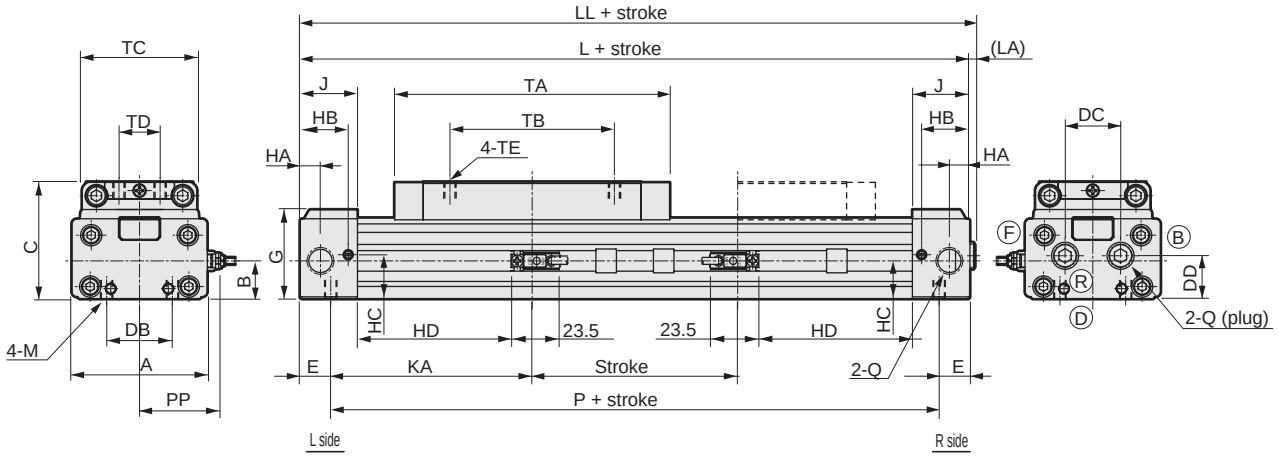

● Bottom piping (option code: D/S)

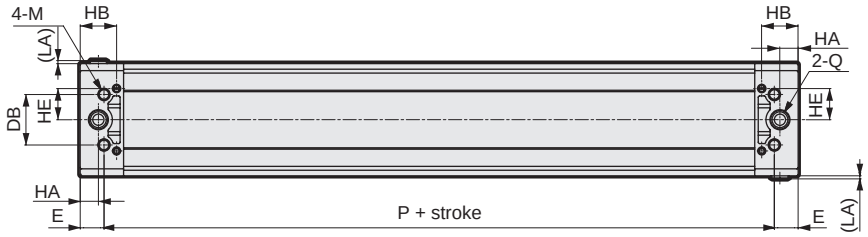

Code / Bore size (mm)	A	B	C	DB	DC	DD	E	G	HA	HB	HC	HE	J	KA	L	LL	LA	M	P	Q	TA	TB	TC	TD	TE
ø25 or equiv.	53	17	53	20	26	19	14	40.5	7.5	20	18.9	-	24	81	190	192	2	M6 depth 9	162	Rc1/8	122	70	48	20	M5 depth 6
ø32 or equiv.	66	18.5	57	32	27	21	15	43.5	10	23.5	21.5	17	28	98	226	228.5	2.5	M6 depth 9	196	Rc1/4	134	80	56	20	M6 depth 7.5
ø40 or equiv.	80	22	67	36	35	28	17	51.5	13	26	27	22.3	31	105	244	246.5	2.5	M8 depth 12	210	Rc1/4	148	90	68	30	M6 depth 9
ø50 or equiv.	96	28	82	45	35	35	23	61	15	33	35.3	11	39	106	258	260.5	2.5	M8 depth 12	212	Rc3/8	152	100	80	30	M8 depth 10.5
ø63 or equiv.	118	35	95	50	39	42	19	74	15	32	43	31	39	129	296	298.5	2.5	M10 depth 15	258	Rc3/8	168	110	102	40	M8 depth 11.5

Code / Bore size (mm)	With switch																
	HD			RD			PA	PB			PP						
	M*	T*Y*	T*W	M*	T*Y*	T*W		T*Y*	T2YD	T*W*	M*V	M*H	T*YV	T*YH	T2YD	T*WV	T*WH
ø25 or equiv.	60	56	52	82	86	90	34.3	35	34	33.5	34.5	34.5	36	33	38.4	30.7	27.2
ø32 or equiv.	74	70	66	96	100	104	41.3	35	34	33.5	41.5	41.5	43	40	45.4	37.7	34.2
ø40 or equiv.	80	76	72	102	106	110	48.3	35	34	33.5	48.5	48.5	50	47	52.4	44.7	41.2
ø50 or equiv.	79	75	71	101	105	109	56.3	35	34	33.5	56.5	56.5	58	55	60.4	52.7	49.2
ø63 or equiv.	98	94	90	120	124	128	67.3	35	34	33.5	67.5	67.5	69	66	71.4	63.7	60.2

*1 : For dimensions with options and dimensions of accessories, refer to pages 1588, 1589, 1622 and 1623.
*2 : Option S is not available for ø25.

Dimensions (ø25 to ø63 equiv.)

● With cylinder switch SRL3-**-**-***-M*H* (straight lead wire)

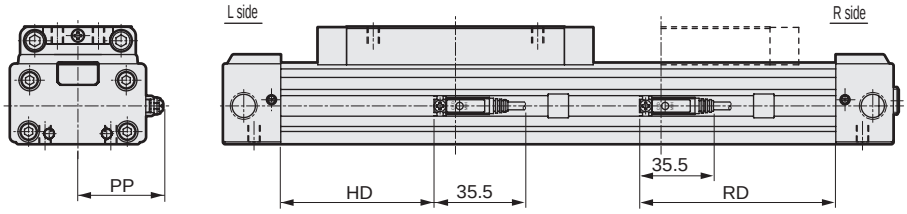

● With cylinder switch SRL3-**-**-***-T*H (T*W, T*Y, T2YD)

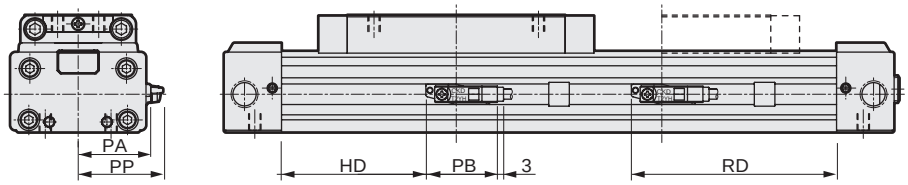

● With cylinder switch SRL3-**-**-***-T*V (T*W, T*Y)

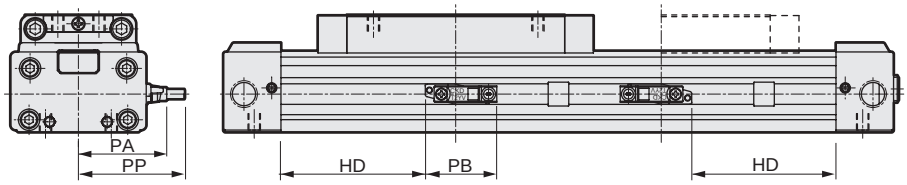

RD: Max. sensitivity installation position HD: Max. sensitivity installation position

● With foot bracket SRL3-LB-25 to 63

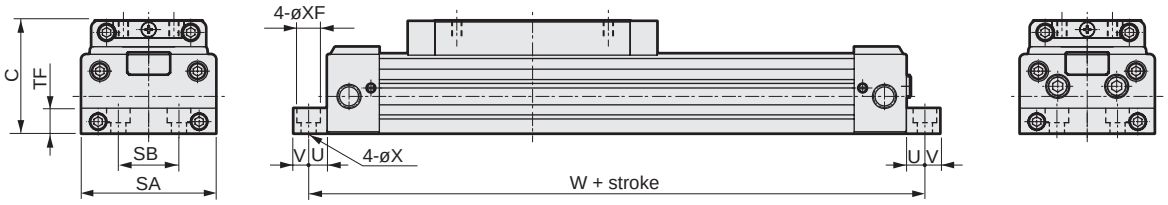

● With foot bracket SRL3-LB1-25, 32 (The mounting LB1 is not available for ø40 to ø63 or equiv.)

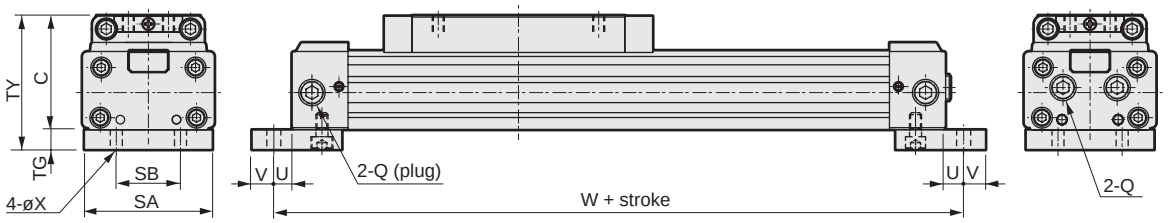

Code	With foot bracket (LB)								With foot bracket (LB1)							
Bore size (mm)	SA	SB	TF	U	V	W	X	XF	SA	SB	TG	TY	U	V	W	X
ø25 or equiv.	52	20	12	9	11	208	7	-	50	20	10	63	9	11	208	7
ø32 or equiv.	64	32	12	9	11	244	7	-	64	32	10	67	9	11	244	7
ø40 or equiv.	80	36	15	11	9	266	9	14 spot face depth 8.6	-	-	-	-	-	-	-	-
ø50 or equiv.	94	45	20	11	9	280	9	14 spot face depth 8.6	-	-	-	-	-	-	-	-
ø63 or equiv.	116	50	25	13	12	322	11	17.5 spot face depth 10.8	-	-	-	-	-	-	-	-

SCP*3
CMK2
CMA2
SCM
SCG
SCA2
SCS2
CKV2
CAV2/ COVP/N2
SSD2
SSG
SSD
CAT
MDC2
MVC
SMG
MSD/ MSDG
FC*
STK
SRL3
SRG3
SRM3
SRT3
MRL2
MRG2
SM-25
ShkAbs
FJ
FK
Spd Contr
Ending

Dimensions (ø80 to ø100 equiv.)

● With cylinder switch SRL3-**-**-***-M*V* (L-shaped lead wire)

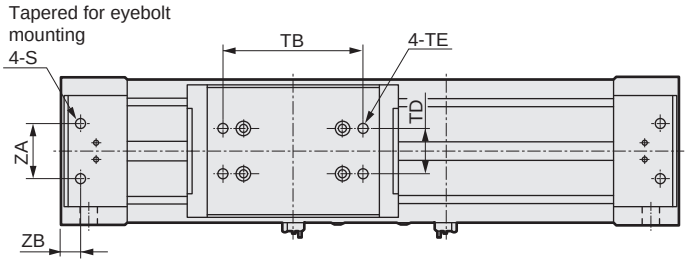

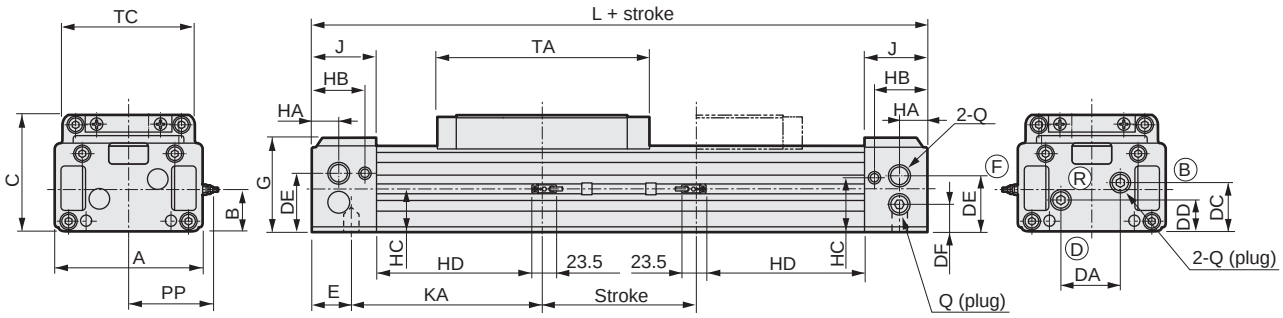

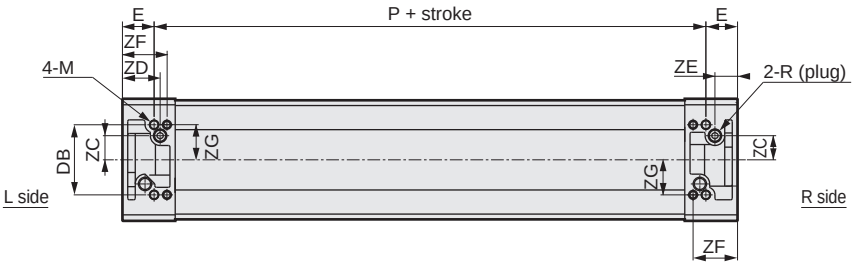

Code / Bore size (mm)	A	B	C	DA	DB	DC	DD	DE	DF	E	G	HA	HB	HC	J	KA	L	M	P	Q	R	S
ø80 or equiv.	162	49	130	64	93	58	38	65	33	42	106	30	59	64.5	70	208	500	M12 depth 18	416	Rc1/2	Rc3/8	M12 depth 23
ø100 or equiv.	198	61.5	150	73	108	71.5	47.5	81.5	41.5	43	125	30	69	76.5	80	222	530	M12 depth 18	444	Rc1/2	Rc1/2	M12 depth 23

Code / Bore size (mm)	TA	TB	TC	TD	TE	ZA	ZB	ZC	ZD	ZE	ZF	ZG	With foot bracket						
													SA	SB	TF	U	V	W	X
ø80 or equiv.	228	150	146	50	M12 depth 15	60	21	32	50	30	59	46.5	162	134	25	13	12	526	14
ø100 or equiv.	238	160	170	60	M12 depth 15	60	21	36.5	55	30	69	54	198	160	30	15	15	560	14

*1: For dimensions with options and dimensions of accessories, refer to pages 1588, 1589, 1622 and 1623.

Dimensions (ø80 to ø100 equiv.)

● With cylinder switch SRL3-**-**-***-M*H*
(straight lead wire)

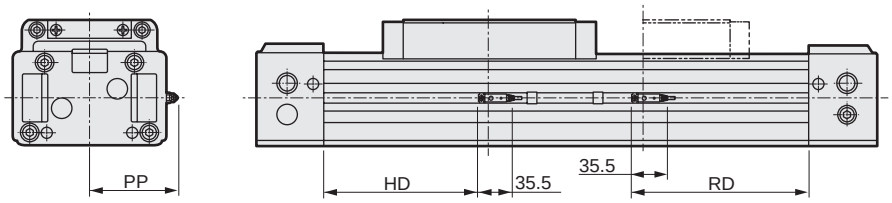

RD: Max. sensitivity mounting position
HD: Max. sensitivity mounting position

● With cylinder switch SRL3-**-**-***-T*H (T*W, T*Y, T2YD)

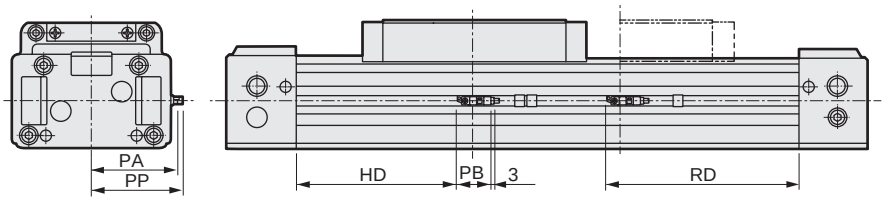

● With cylinder switch SRL3-**-**-***-T*V (T*W, T*Y)

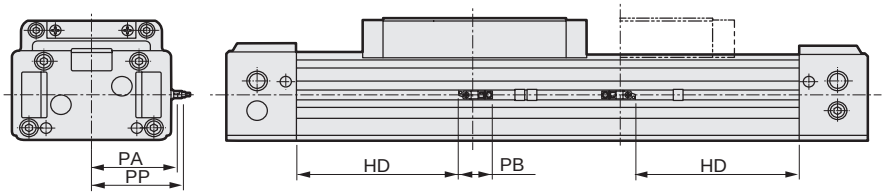

● With foot bracket SRL3-LB-**-***

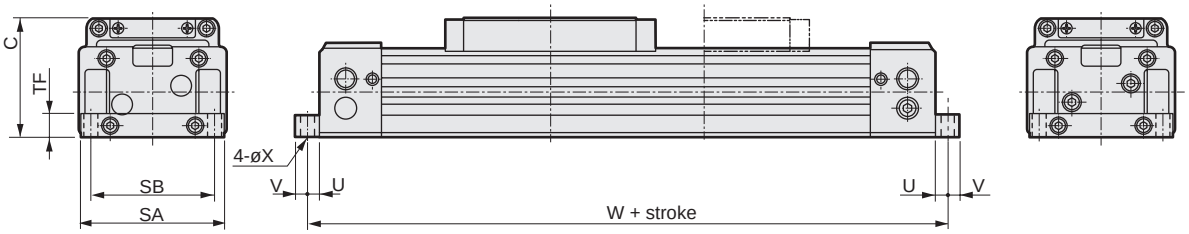

Code	With switch																
Bore size (mm)	HD			RD			PA	PB			PP						
	M*	T*Y*	T*W	M*	T*Y*	T*W		T*Y*	T2YD	T*W*	M*V	M*H	T*YV	T*YH	T2YD	T*WV	T*WH
ø80 or equiv.	170	165	161	190	195	199	87.3	35	34	33.5	87.5	87.5	89	86	91.4	83.7	80.2
ø100 or equiv.	175	170	166	195	200	204	105.3	35	34	33.5	105.5	105.5	107	104	109.4	101.7	98.2

SCP*3
CMK2
CMA2
SCM
SCG
SCA2
SCS2
CKV2
CAV2/ COVP/N2
SSD2
SSG
SSD
CAT
MDC2
MVC
SMG
MSD/ MSDG
FC*
STK
SRL3
SRG3
SRM3
SRT3
MRL2
MRG2
SM-25
ShkAbs
FJ
FK
Spd Contr
Ending

SRL3 Series common dimensions

● Full stroke adjustable with shock absorber (SRL3)

· ø12 to ø25 or equiv.

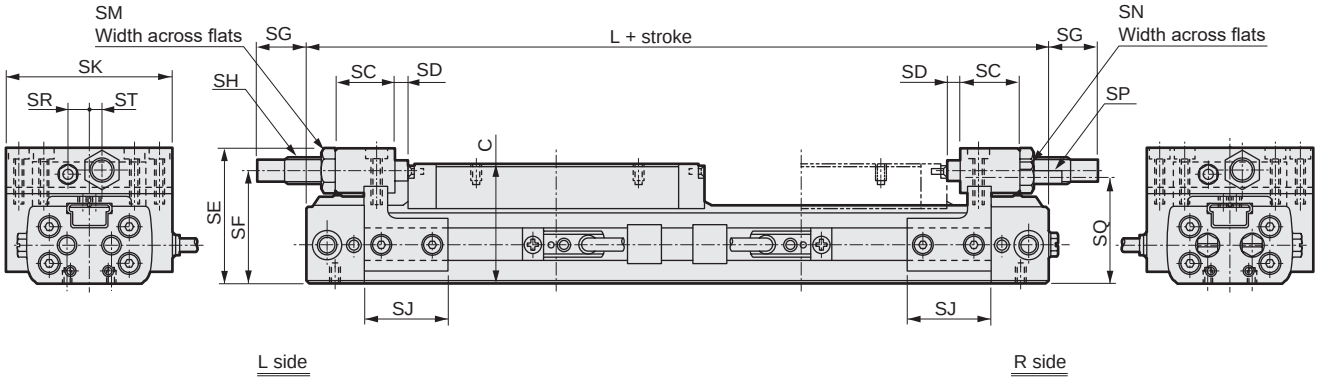

Code / Bore size (mm)	SC	SD	SE	SF	SG At max.	SG At min.	SG Adj range	SH Thread size	SH Max. absorbed energy (J)	SJ	SK	SM	SN	SP	SQ	SR	ST	C	L
ø12 or equiv.	19.5	2.5	40	32	17.5	7.5	10	M8x0.75	3	25	45	12	5.5	M3	30.5	6	3	33	136
ø16 or equiv.	18	4	42	35	14.5	4.5	10	M8x0.75	3	25	49	12	5.5	M3	34	6	4	37	149
ø20 or equiv.	22.5	3.5	48	40	14.5	4.5	10	M10x1.0	7	39	57	14	7	M4	38	8	5	42	169
ø25 or equiv.	20	2.5	62.5	51.5	14.5	4.5	10	M12x1.0	12	50	77	17	10	M6	50	12	10	53	190

· ø32 to ø63 or equiv.

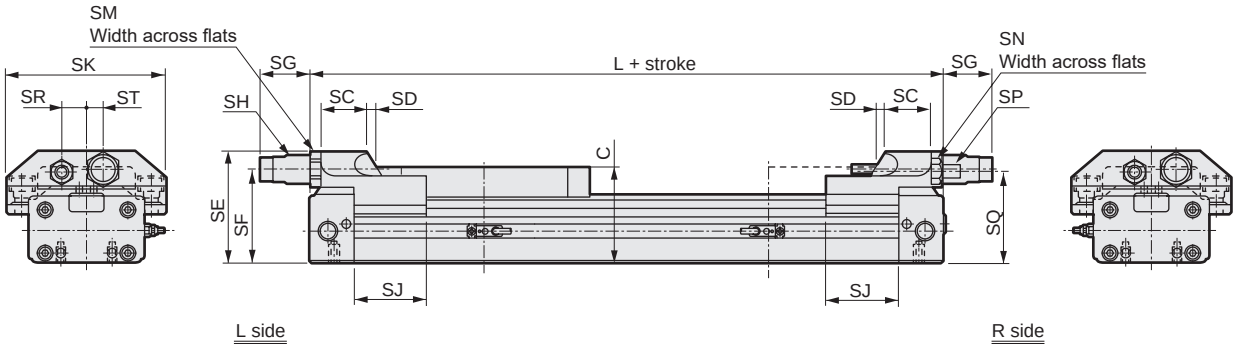

Code / Bore size (mm)	SC	SD	SE	SF	SG At max.	SG At min.	SG Adj range	SH Thread size	SH Max. absorbed energy (J)	SJ	SK	SM	SN	SP	SQ	SR	ST	C	L
ø32 or equiv.	22	7	66.5	55.5	27	17	10	M14x1.5	26	46	98	19	13	M8	53.5	14	12	57	226
ø40 or equiv.	32	7	78.5	65.5	34	24	10	M20x1.5	70	51	112	24	17	M10	63.5	17	12	67	244
ø50 or equiv.	38	8	99	80	55	45	10	M25x1.5	120	53	136	32	19	M12	77.5	22	17	82	258
ø63 or equiv.	38	8	112	93.5	44	34	10	M25x1.5	120	64	158	32	24	M16	89	25	20	95	296

SRL3 Series common dimensions

● Full stroke adjustable with shock absorber

· ø80, ø100 or equiv.

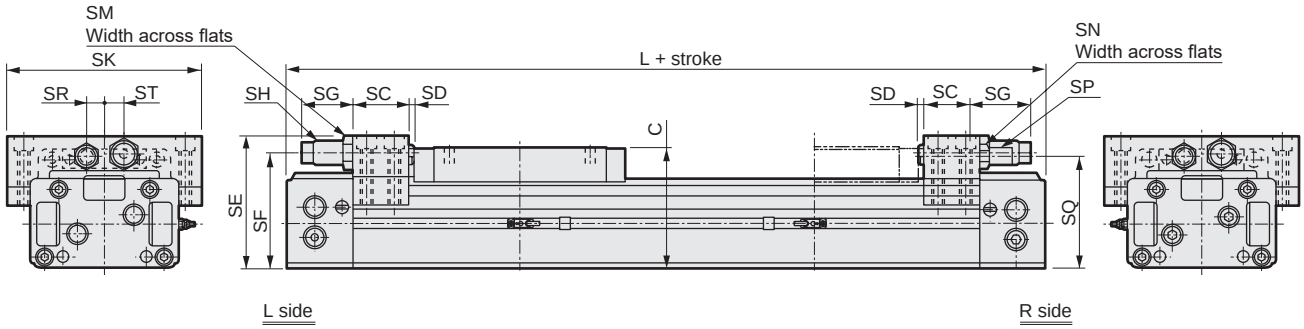

Code / Bore size (mm)	SC	SD	SE	SF	SG At max.	SG At min.	SG Adj range	SH Thread size	SH Max. absorbed energy (J)	SK	SM	SN	SP	SQ	SR	ST	C	L
ø80 or equiv.	60	6	145	125.5	50	40	10	M27x1.5	200	214	32	27	M20	123	20	20	130	500
ø100 or equiv.	60	6	164	144.5	50	40	10	M27x1.5	200	250	32	27	M20	142	20	20	150	530

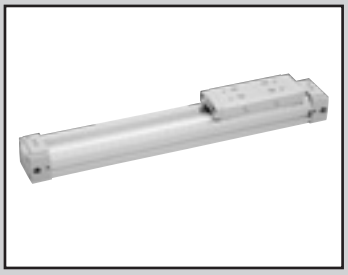

Rodless cylinder resin guide

SRL3-G Series

● Bore size: ø12, ø16, ø20, ø25, ø32
ø40, ø50, ø63, ø80, ø100

JIS symbol 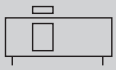

RoHS CAD

Specifications

Item	SRL3-G									
Bore size mm	ø12	ø16	ø20	ø25	ø32	ø40	ø50	ø63	ø80	ø100
Actuation	Double acting									
Working fluid	Compressed air									
Max. working pressure MPa	0.7 (≈100 psi, 7 bar)									
Min. working pressure MPa	0.25 (≈36 psi, 2.5 bar)			0.15 (≈22 psi, 1.5 bar)				0.1 (≈15 psi, 1 bar)		
Proof pressure MPa	1.05 (≈150 psi, 10.5 bar)									
Ambient temperature °C	5 (41°F) to 60 (140°F)									
Port size	M5		Rc1/8		Rc1/4		Rc3/8		Rc1/2	
Stroke tolerance mm	$^{+2.0}_{0}$ (to 1000), $^{+2.5}_{0}$ (to 3000), $^{+3.0}_{0}$ (to 5000)									
Working piston speed mm/s	50 to 2000 (standard piping) (*1)									
Cushion	Air cushion									
Lubrication	Not required (use turbine oil class 1 ISO VG32 if necessary for lubrication. Once lubricated, the cylinder will need periodic lubrication.)									

*1: For common port piping, the working piston speed varies depending on the stroke. Contact CKD.

Allowable absorbed energy

Bore size (mm)	Cushioned		Without cushion	With shock absorber (initial set point)	
	Max absorbed energy (J)	Cushion stroke (mm)	Max absorbed energy (J)	Absorbed energy (J)	Effective stroke (mm)
ø12 or equiv.	0.03	14.5	0.003	2.4	5.5
ø16 or equiv.	0.22	19.2	0.007	2.4	5.5
ø20 or equiv.	0.59	22.2	0.010	5.7	7
ø25 or equiv.	1.40	20.9	0.015	10	9
ø32 or equiv.	2.57	23.5	0.030	18	13
ø40 or equiv.	4.27	23.9	0.050	50	16.5
ø50 or equiv.	9.13	24.9	0.072	86	21
ø63 or equiv.	17.4	29.6	0.138	86	21
ø80 or equiv.	40	45.8	0.393	143	25
ø100 or equiv.	67	45.8	0.622	143	25

Stroke

Bore size (mm)	Standard stroke (mm)	Max. stroke (mm)	Min. stroke (mm)
ø12 equiv. ø16 equiv. ø20 equiv. ø25 equiv. ø32 equiv. ø40 equiv. ø50 equiv. ø63 equiv. ø80 equiv. ø100 equiv.	200/300 400/500 600/700 800/900 1000	5000	1

* The custom stroke is available in 1 mm increments.

Number of installed M-switches and min. stroke (mm)

Switch quantity	1		2		3		4		5		6	
Switch model No. / Bore size (mm)	M*V	M*H	M*V	M*H	M*V	M*H	M*V	M*H	M*V	M*H	M*V	M*H
ø12 or equiv.	10	10	30	45(70)	60	90(120)	90	135(170)	120	180(220)	150	225(270)
ø16 or equiv.	10	10	30	45(70)	60	90(120)	90	135(170)	120	180(220)	150	225(270)
ø20 or equiv.	10	10	30	45(70)	60	90(120)	90	135(170)	120	180(220)	150	225(270)
ø25 or equiv.	10	10	30	45(70)	60	90(120)	90	135(170)	120	180(220)	150	225(270)
ø32 or equiv.	10	10	30	45	60	90	90	135	120	180	150	225
ø40 or equiv.	10	10	30	45	60	90	90	135	120	180	150	225
ø50 or equiv.	15	15	30	45	60	90	90	135	120	180	150	225
ø63 or equiv.	15	15	30	45	60	90	90	135	120	180	150	225
ø80 or equiv.	25		50		100		150		200		250	
ø100 or equiv.	25		50		100		150		200		250	

Note: Values in ( ) are the min. stroke with switch of the full stroke adjustable.

Number of installed T-switches and min. stroke (mm)

Switch quantity	1		2		3		4		5		6	
Switch model No. / Bore size (mm)	T*V	T*H	T*V	T*H	T*V	T*H	T*V	T*H	T*V	T*H	T*V	T*H
ø12 or equiv.	5	5	45	50(70)	85	100(120)	125	150(170)	165	200(220)	205	250(270)
ø16 or equiv.	5	5	45	50(70)	85	100(120)	125	150(170)	165	200(220)	205	250(270)
ø20 or equiv.	5	5	45	50(70)	85	100(120)	125	150(170)	165	200(220)	205	250(270)
ø25 or equiv.	10	10	45	50(70)	85	100(120)	125	150(170)	165	200(220)	205	250(270)
ø32 or equiv.	10	10	45	50	85	100	125	150	165	200	205	250
ø40 or equiv.	10	10	45	50	85	100	125	150	165	200	205	250
ø50 or equiv.	10	10	45	50	85	100	125	150	165	200	205	250
ø63 or equiv.	10	10	45	50	85	100	125	150	165	200	205	250
ø80 or equiv.	15	15	45	50	85	100	125	150	165	200	205	250
ø100 or equiv.	15	15	45	50	85	100	125	150	165	200	205	250

Note: Values in ( ) are the min. stroke with switch of the full stroke adjustable.

Switch specifications (M-switch)

● 1-color/2-color LED

Item	2-wire proximity		3-wire proximity		
	M2V,M2H	M2WV (2-color LED)	M3H/M3V	M3PH/M3PV (Made to order)	M3WV
Applications	Dedicated for programmable controller		Programmable controller,Relay,ICcircuitRoad,Compact solenoid valve		
Output method	-		NPN output	PNP output	NPN output
Power supply voltage	-		4.5 to 28 VDC		10 to 28 VDC
Load voltage	10 to 30 VDC		30 VDC or less		
Load current	5 to 30mA		100 mA or less	100 mA or less	100 mA or less
Indicator	LED (Lit when ON)	Red/green LED (Lit when ON)	LED (Lit when ON)	Yellow LED (Lit when ON)	Red/green LED (Lit when ON)
Leakage current	1 mA or less		10 μA or less	0.05 mA or less	10 μA or less
Weight g	1 m: 22 3 m: 57 5 m: 93				

Item	2-wire reed			
	M0V,M0H		M5V,M5H	
Applications	For programmable controller, relay		For programmable controller, relay, IC circuit (without indicator lamp), serial connection	
Power supply voltage	-		-	
Load voltage	12/24 VDC	110 VAC	5/12/24 VDC	110 VAC or less
Load current	5 to 50mA	7 to 20mA	50 mA or less	20 mA or less
Indicator	LED(ONHourON)		No indicator lamp	
Leakage current	0mA			
Weight g	1 m: 22 3 m: 57 5 m: 93			

*1: Refer to Ending Page 1 for detailed switch specifications and dimensions.

Switch specifications(TModelSwitch)

● 2-color LED

Item	2-wire proximity		3-wire proximity	
	T2YH/T2YV	T2WH/T2WV	T3YH/T3YV	T3WH/T3WV
Applications	Dedicated for programmable controller		For programmable controller, relay	
Output method	-		NPN output	NPN output
Power supply voltage	-		10 to 28 VDC	
Load voltage	10 to 30 VDC	24 VDC ±10%	30 VDC or less	
Load current	5 to 20 mA (*3)		50 mA or less	
Indicator	Red/green LED (Lit when ON)	Red/green LED (Lit when ON)	Red/green LED (Lit when ON)	Red/green LED (Lit when ON)
Leakage current	1 mA or less		10 μA or less	
Weight g	1 m: 33 3 m: 87 5 m: 142	1 m: 18 3 m: 49 5 m: 80	1 m: 33 3 m: 87 5 m: 142	1 m: 18 3 m: 49 5 m: 80

● For AC magnetic field

Item	2-wire proximity
	T2YD, T2YDT (*4)
Applications	Dedicated for programmable controller
Indicator	Red/Green LED (Lit when ON)
Load voltage	24 VDC ±10%
Load current	5 to 20mA
Internal voltage drop	6 V or less
Leakage current	1.0 mA or less
Weight g	1 m: 61 3 m: 166 5 m: 272

*1 : Refer to Ending Page 1 for detailed switch specifications and dimensions.
*2 : Switches other than the above models, such as switches with connectors, are also available. Refer to Ending Page 1.
*3 : The max. load current is 20 mA at 25°C. The current is lower than 20 mA if the operating ambient temperature around the switch is higher than 25°C. (5 to 10 mA at 60°C)
*4 : AC magnetic field proof switch (T2YD/T2YDT) cannot be used in DC magnetic field.

Cylinder weight

Unit: kg

Bore size (mm)	Stroke for 0 mmVolume				Mounting bracket weight		Additional weight per St = 100mm
	Basic (00)	Foot		#Switch weight			
		(LB)	(LB1)		T type	M type	
ø12 or equiv.	0.24	0.25	0.26	Refer to the weight in the Use this as a reference.	0.005	0.001	0.10
ø16 or equiv.	0.32	0.33	0.35				0.13
ø20 or equiv.	0.52	0.54	0.58				0.18
ø25 or equiv.	1.0	1.1	1.1				0.28
ø32 or equiv.	1.5	1.6	1.7				0.36
ø40 or equiv.	2.4	2.5	-				0.53
ø50 or equiv.	3.5	3.6	-				0.75
ø63 or equiv.	6.1	6.4	-				1.11
ø80 or equiv.	18.8	19.4	-				2.32
ø100 or equiv.	26.6	27.6	-				3.38

SCP*3
CMK2
CMA2
SCM
SCG
SCA2
SCS2
CKV2
CAV2/COVP/N2
SSD2
SSG
SSD
CAT
MDC2
MVC
SMG
MSD/MSDG
FC*
STK
SRL3
SRG3
SRM3
SRT3
MRL2
MRG2
SM-25
ShkAbs
FJ
FK
Spd Contr
Ending

How to order

No switch (built-in magnet for switch)

SRL3-G - 00 - 12 ◯ B - 200 ——— B

With switch (built-in magnet for switch)

SRL3-G - 00 - 12 ◯ B - 200 - M0H - R - B

Ⓐ Mounting *1, *2

Ⓑ Bore size

Ⓒ Port thread

Ⓓ Cushion

Ⓔ Stroke

Ⓕ Switch model No.

Ⓖ Switch quantity

Ⓗ Option *4, *5 *6, *7

Code	Description
Ⓐ Mounting	
00	Basic
LB	Axial foot
LB1	Axial foot (ø12 to ø32 only)
Ⓑ Bore size (mm)	
12	ø12
16	ø16
20	ø20
25	ø25
32	ø32
40	ø40
50	ø50
63	ø63
80	ø80
100	ø100
Ⓒ Port thread	
Blank	Rc thread (M5 for ø12 and ø16)
N	NPT thread (ø20 or more) (made-to-order product)
G	G thread (ø20 or more) (made-to-order product)
Ⓓ Cushion	
B	Both sides cushioned
R	R side cushioned
L	L side cushioned
N	Without cushion

Ⓔ Stroke (mm)

Bore size	Stroke *3	Custom stroke
ø12 to ø100	**1 to 5000**	**In 1 mm increments**

Ⓕ Switch model No.

Axial lead wire	Radial lead wire	Contact	Voltage AC	Voltage DC	Indicator	Lead wire
M0H*	M0V*	Reed	●	●	1-color LED	2-wire
M5H*	M5V*	Reed	●	●	No indicator lamp	2-wire
M2H*	M2V*	Proximity		●	1-color LED	
-	M2WV*	Proximity		●	2-color LED	2-wire
M3H*	M3V*	Proximity		●	1-color LED	
-	M3WV*	Proximity		●	2-color LED	3-wire
M3PH*	M3PV*	Proximity		●	1-color LED (custom)	3-wire
T2WH*	T2WV*	Proximity		●	2-color LED	2-wire
T2YH*	T2YV*	Proximity		●	2-color LED	2-wire
T3WH*	T3WV*	Proximity		●	2-color LED	3-wire
T3YH*	T3YV*	Proximity		●	2-color LED	3-wire
T2YD*	-	Proximity		●	2-color LED for AC magnetic field	2-wire
T2YDT*	-	Proximity		●	2-color LED for AC magnetic field	2-wire

*** Lead wire length**

Blank	1 m (standard)
3	3 m (option)
5	5 m (option)

Ⓖ Switch quantity

R	1 on R side
L	1 on L side
D	2
T	3
4	4 (when there are more than 4 switches, indicate switch quantity.)

Ⓗ Option

	Bore size (ø)	12	16	20	25	32	40	50	63	80	100
A	Both-sides full stroke adjustable, shock absorber	●	●	●	●	●	●	●	●	●	●
A1	R side full stroke adjustable, shock absorber	●	●	●	●	●	●	●	●	●	●
A2	L side full stroke, adjustable, shock absorber	●	●	●	●	●	●	●	●	●	●
A3	Full stroke adjustable, adjusting bracket to be added	●	●	●	●						
L*	Intermediate support bracket (for 00, LB)	●	●	●	●	●	●	●	●	●	●
N*	Intermediate support bracket (for LB1)	●	●	●	●	●					
H	Larger thread for table installation	●	●	●							
U	Height adjustment plate	●	●	●	●	●	●	●	●	●	●
Blank	Port position: F (Standard); Cushion needle position: F (Standard)	●	●	●	●	●	●	●	●	●	●
R	Port position: R (Common port); Cushion needle position: F	●	●	●	●	●	●	●	●	●	●
B	Port position: F; Cushion needle position: B	●	●	●	●	●	●	●	●	●	●
T	Port position: R (Common port); Cushion needle position: B	●	●	●	●	●	●	●	●	●	●
D	Port position: D; Cushion needle position: F				●	●	●	●	●	●	●
S	Port position: D; Cushion needle position: D					●	●	●	●	●	●
X	Port position: F (Common port); Cushion needle position: F									●	●

Note on model No. selection

*1 : Mounting bracket will be shipped assembled with the product.
*2 : For 12, 16, 20, 25 and 32 bore sizes with option code "R" or "T", the mounting will be "00" or "LB1". (Piping with mounting "LB" is not possible for option codes "R" and "T".)
*3 : Refer to page 1590 for the min. stroke with switch.
*4 : Switches other than Ⓕ Switch model No. are also available. (Made to order) Refer to Ending Page 1 for details.
5 : "" of L* and N* indicates the number of sets. When more than one set are necessary, specify "L2" (for LB) or "N2" (for LB1). 2 pcs./set
*6 : For the port and cushion needle position codes, refer to dimensions on pages 1598 to 1603.
*7 : In the case of the standard with ø12 to ø25, remove the cover, attach a flat nut and install the full stroke adjusting bracket. A flat nut is attached to option "A3" to enable retrofitting the full stroke adjusting bracket without removing the cover.
*8 : In "H", the thread size for ø12 and ø16 will be "M4" and that for ø20 will be "M5".
*9 : Check the option combinations in "Option selection table".
*10 : Copper and PTFE free as standard. (except for type with shock absorber)

[Example of model No.]

SRL3-G-00-12B-200-M0H-R-B

Model: Rodless cylinder resin guide type

Ⓐ Mounting : Basic
Ⓑ Bore size : ø12 mm
Ⓒ Port thread : M5
Ⓓ Cushion : Both sides cushioned
Ⓔ Stroke : 200 mm
Ⓕ Switch model No. : Reed M0H switch, lead wire 1 m
Ⓖ Switch quantity : 1 on R side
Ⓗ Option : Port position F, cushion needle position B

Option selection table

●: Available ■: Not available

		Option														
		Both side full stroke adjustable, with shock absorber	R side full stroke adjustable, with shock absorber	L side full stroke adjustable, with shock absorber	Full stroke adjustable with adjusting bracket to be added later	Intermediate support bracket (for 00, LB)	Intermediate support bracket (for LB1)	Larger thread for table installation	Height adjustment plate	Port position F, cushion needle position F (standard)	Port position R, cushion needle position F (common port)	Port position F, cushion needle position B	Port position R, cushion needle position B (common port)	Port position D, cushion needle position F	Port position D, cushion needle position D	Port position F, cushion needle position F (common port)
	Code	A	A1	A2	A3	L*	N*	H	U	Blank	R	B	T	D	S	X
Option	A					●	●	●	●	●	●	●	●	●	●	●
	A1					●	●	●	●	●	●	●	●	●	●	●
	A2					●	●	●	●	●	●	●	●	●	●	●
	A3					●	●	●	●	●	●	●	●	●	●	
	L*							●	●	●	●	●	●	●	●	●
	N*							●	●	●	●	●	●	●	●	
	H									●	●	●	●	●	●	
	U									●	●	●	●	●	●	●
	Blank															
	R															
	B															
	T															
	D															
	S															
	X															

*1: Some combinations are not available depending on the bore size. Be sure to check the Ⓗ Option in "How to order" on the previous page.
*2: LB1 with port position D is not possible. (ø25, ø32)

Theoretical thrust table

(Unit: N)

Bore size (mm)	Operating direction	Working pressure MPa								
		0.1	0.15	0.2	0.25	0.3	0.4	0.5	0.6	0.7
ø12	Push/Pull	–	–	–	34.6	41.5	55.3	69.1	83.0	96.8
ø16	Push/Pull	–	–	–	54.0	64.8	86.4	1.08×10^2	1.30×10^2	1.51×10^2
ø20	Push/Pull	–	–	–	78.6	94.4	1.26×10^2	1.57×10^2	1.89×10^2	2.20×10^2
ø25	Push/Pull	–	81.4	1.08×10^2	1.35×10^2	1.63×10^2	2.17×10^2	2.71×10^2	3.25×10^2	3.80×10^2
ø32	Push/Pull	–	1.22×10^2	1.63×10^2	2.04×10^2	2.44×10^2	3.26×10^2	4.07×10^2	4.88×10^2	5.70×10^2
ø40	Push/Pull	–	1.90×10^2	2.53×10^2	3.16×10^2	3.80×10^2	5.06×10^2	6.33×10^2	7.60×10^2	8.86×10^2
ø50	Push/Pull	–	2.98×10^2	3.98×10^2	4.98×10^2	5.96×10^2	7.95×10^2	9.94×10^2	1.19×10^3	1.39×10^3
ø63	Push/Pull	3.14×10^2	4.70×10^2	6.27×10^2	7.84×10^2	9.41×10^2	1.25×10^3	1.57×10^3	1.88×10^3	2.20×10^3
ø80	Push/Pull	5.06×10^2	7.60×10^2	1.01×10^3	1.26×10^3	1.52×10^3	2.03×10^3	2.53×10^3	3.04×10^3	3.54×10^3
ø100	Push/Pull	7.91×10^2	1.19×10^3	1.58×10^3	1.98×10^3	2.37×10^3	3.16×10^3	3.95×10^3	4.74×10^3	5.53×10^3

How to order switch (For configurations, refer to pages 1624 to 1626)

● Switch body + mounting bracket set (*1)

SRL3 - M0H*

Switch model No.
(Item Ⓕ on page 1592)

● Switch body only

SW - M0H*

Switch model No.
(Item Ⓕ on page 1592)

* Lead wire length	
Blank	1 m (standard)
3	3 m (option)
5	5 m (option)

* indicates lead wire length.

● Mounting bracket set (*2)

· M-switch

SRL3 - M

· T-switch

SRL3 - T

● Lead wire holder (*3)

SRL3 - MH

*1: "Switch body + mounting bracket set" does not include lead wire holders. Order lead wire holders separately if necessary.
*2: The mounting bracket is different between the M-switch and T-switch.
*3: The quantity of lead wire holders per set is 10.

● How to order discrete shock absorber

SRL3 - 40 - NCK

Bore size
(Item Ⓑ on page 1592)
(One shock absorber, one shock absorber fixing hexagon nut)

(Note) The shock absorber fixing hexagon nut for SRL3-40 is a made-to-order product.

Applicable shock absorber model No.

Model	Shock absorber model No.
SRL3-12	NCK-00-0.3-C
SRL3-16	NCK-00-0.3-C
SRL3-20	NCK-00-0.7-C
SRL3-25	NCK-00-1.2
SRL3-32	NCK-00-2.6
SRL3-40	NCK-00-7
SRL3-50	NCK-00-12
SRL3-63	NCK-00-12
SRL3-80	NCK-00-20
SRL3-100	NCK-00-20

● How to order discrete intermediate support bracket

For 00/LB

SRL3 - 40 - L (2/set)

Bore size
(Item Ⓑ on page 1592)

For LB1

SRL3 - 32 - N (2/set)

Bore size
(Item Ⓑ on page 1592)

● How to order full stroke adjusting bracket kit

SRL3 - 40 - A1 (1 set)

Bore size
(Item Ⓑ on page 1592)

(For configurations, refer to "Full stroke adjusting bracket kit" on page 1625.)

● How to order repair parts

SRL3-G - 40 K - 200

Bore size (Item Ⓑ on page 1592)
Stroke (Item Ⓔ on page 1592)

● How to order mounting bracket

SRL3 - LB - 40

Mounting (Item Ⓐ on page 1592)
Bore size (Item Ⓑ on page 1592)
(Bracket x2, mounting bolt x4)

● How to order height adjustment plate set

SRL3 - 40 - U

Bore size
(Item Ⓑ on page 1592)
(Plate, mounting bolt x4)

Internal structure and parts list (ø12 to ø40 equiv.)

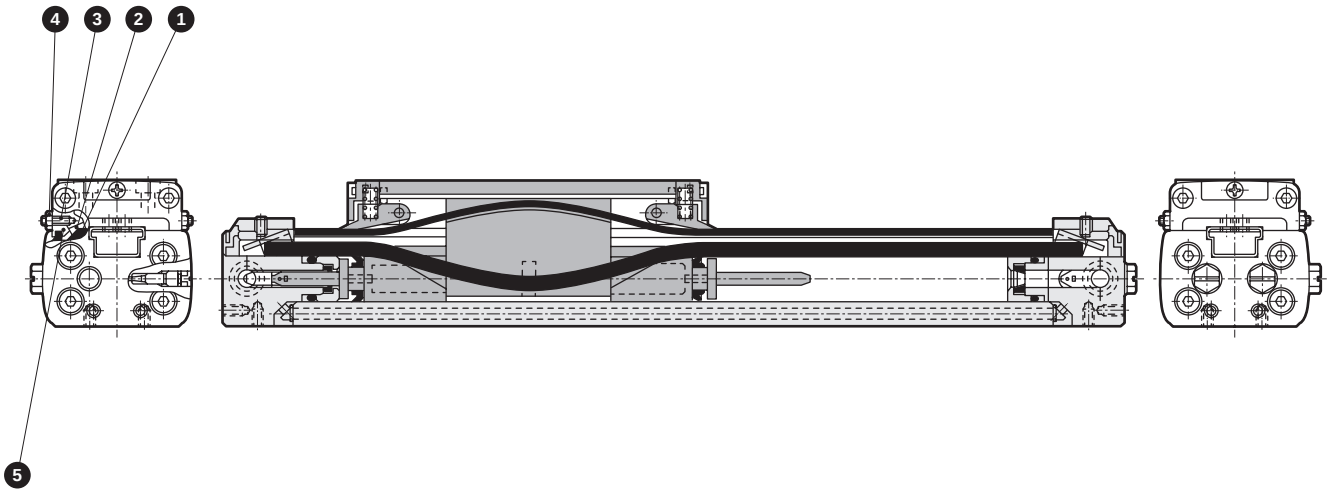

Parts list

No.	Part name	Material	Remarks	No.	Part name	Material	Remarks
1	Slider	Acetal resin		4	Nut	Steel	Zinc chromate
2	Slider plate	Steel		5	Dust wiper	Acetal resin	
3	Adjusting screw	Alloy steel	Zinc chromate				

Repair parts list

Bore size (mm)	Kit No.	Repair parts No.
ø12 or equiv.	SRL3-G-12K-*	❶ ❺ ⑧ ⑨ ⑱ ㉑ ㉒ ㉖ ㉗
ø16 or equiv.	SRL3-G-16K-*	
ø20 or equiv.	SRL3-G-20K-*	
ø25 or equiv.	SRL3-G-25K-*	
ø32 or equiv.	SRL3-G-32K-*	
ø40 or equiv.	SRL3-G-40K-*	

*1 : Specify the kit No. when placing an order. Specify the stroke for *.
*2 : Part numbers ⑧⑨⑱㉑㉒㉖㉗ are the same as those on page 1579.

SCP*3
CMK2
CMA2
SCM
SCG
SCA2
SCS2
CKV2
CAV2/COVP/N2
SSD2
SSG
SSD
CAT
MDC2
MVC
SMG
MSD/MSDG
FC*
STK
SRL3
SRG3
SRM3
SRT3
MRL2
MRG2
SM-25
ShkAbs
FJ
FK
Spd Contr
Ending

Internal structure and parts list (ø50, ø63 equiv.)

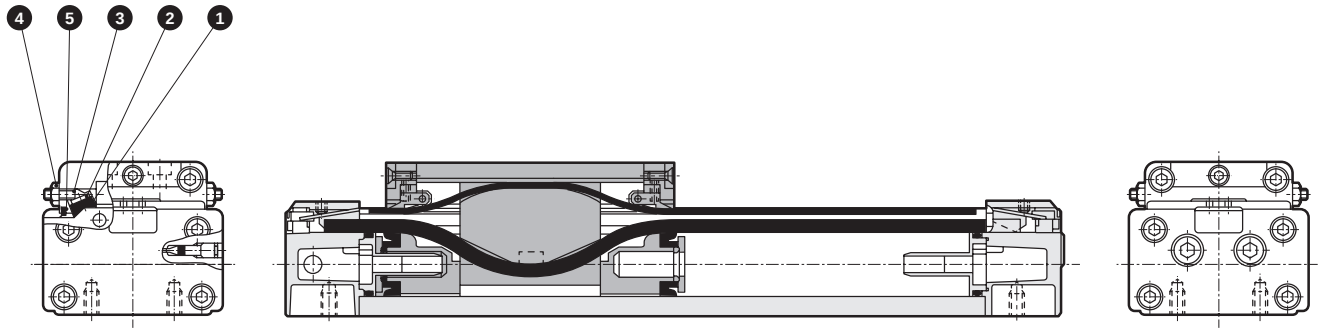

Parts list

No.	Part name	Material	Remarks	No.	Part name	Material	Remarks
1	Slider	Acetal resin		4	Nut	Steel	Zinc chromate
2	Slider plate	Steel	Zinc chromate	5	Dust wiper	Acetal resin	
3	Adjusting screw	Alloy steel	Zinc chromate				

Repair parts list

Bore size (mm)	Kit No.	Repair parts No.
ø50 or equiv.	SRL3-G-50K-*	❶ ❺ ⑧ ⑨ ⑱ ㉑ ㉒ ㉖ ㉗ ㉜
ø63 or equiv.	SRL3-G-63K-*	

*1 : Specify the kit No. when placing an order. Specify the stroke for *.
*2 : Part numbers ⑧⑨⑱㉑㉒㉖㉗㉜ are the same as those on page 1580.

Internal structure and parts list (ø80, ø100 equiv.)

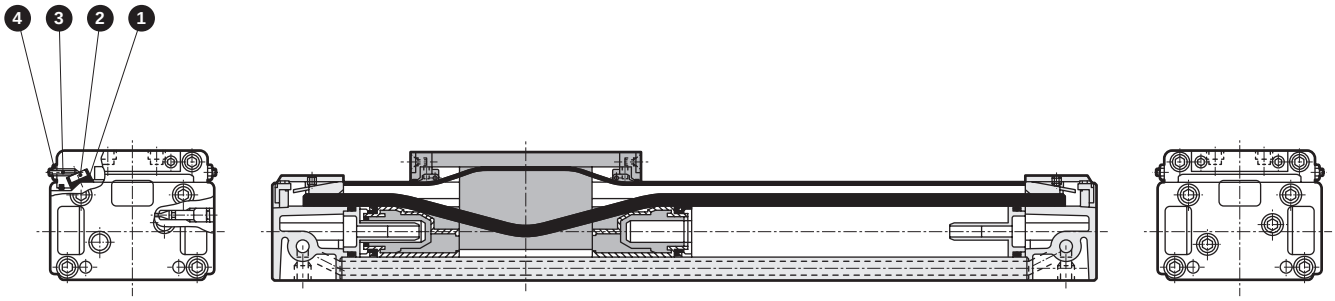

Parts list

No.	Part name	Material	Remarks	No.	Part name	Material	Remarks
1	Slider	Acetal resin		3	Adjusting screw	Alloy steel	Zinc chromate
2	Slider plate	Steel	Zinc chromate	4	Nut	Steel	Zinc chromate

Repair parts list

Bore size (mm)	Kit No.	Repair parts No.
ø80 or equiv.	SRL3-G-80K-*	❶ ⑧ ⑨ ⑱ ㉑ ㉒ ㉖ ㉗ ㉘ ㉙ ㉜ ㉝
ø100 or equiv.	SRL3-G-100K-*	

*1 : Specify the kit No. when placing an order. Specify the stroke for *.
*2 : Part numbers ⑧⑨⑱㉑㉒㉖㉗㉘㉙㉜㉝ are the same as those on page 1581.

SCP*3
CMK2
CMA2
SCM
SCG
SCA2
SCS2
CKV2
CAV2/COVP/N2
SSD2
SSG
SSD
CAT
MDC2
MVC
SMG
MSD/MSDG
FC*
STK
SRL3
SRG3
SRM3
SRT3
MRL2
MRG2
SM-25
ShkAbs
FJ
FK
Spd Contr
Ending

Dimensions (ø12 to ø20 equiv.)

CAD

● With cylinder switch SRL3-G-**-**-***-M*V*
(L-shaped lead wire)

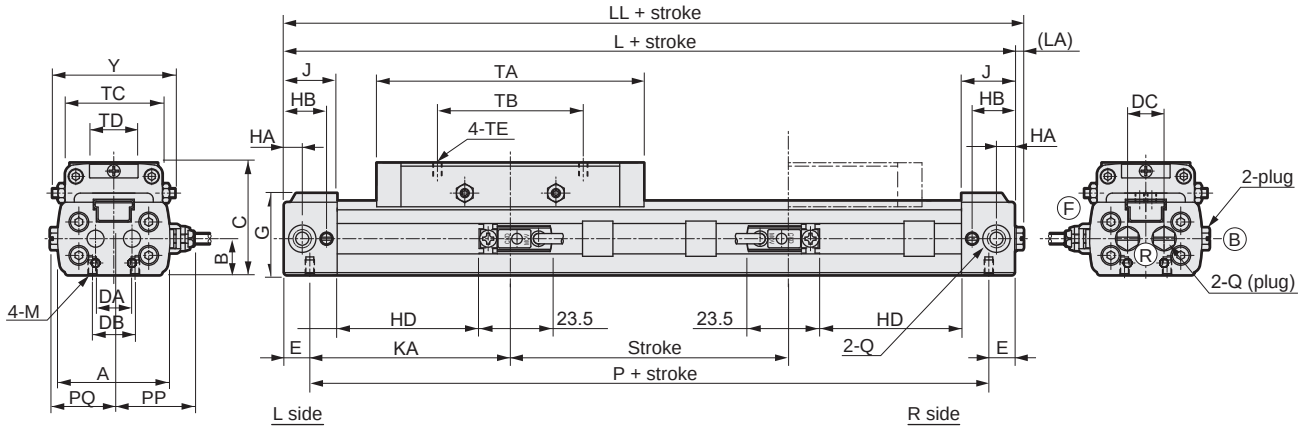

● With cylinder switch SRL3-G-**-**-***-M*H*
(straight lead wire)

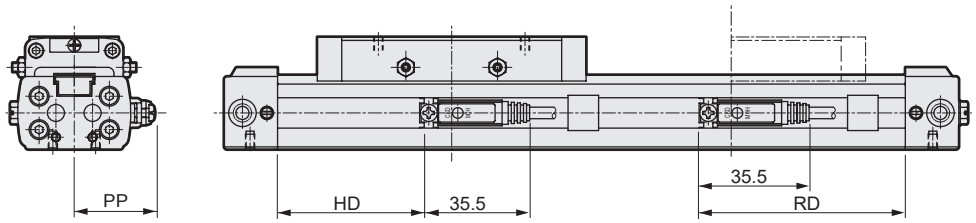

● With cylinder switch SRL3-G-**-**-***-T*H (T*W, T*Y, T2YD)

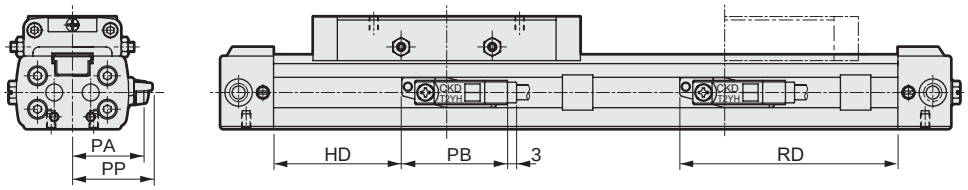

● With cylinder switch SRL3-G-**-**-***-T*V (T*W, T*Y)

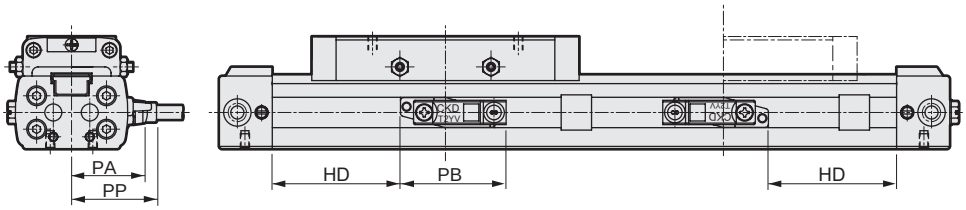

RD: Max. sensitivity installation position HD: Max. sensitivity installation position

Code / Bore size (mm)	A	B	C	DA	DB	DC	E	G	HA	HB	J	KA	L	LL	LA	M	P	PQ	Q	TA	TB	TC	TD	TE	Y
ø12 or equiv.	33	10.5	33	8	10	11	8.5	24	6	14	17.5	59.5	136	139	3	M3 depth 5	119	19	M5	81	42	29	13	M3 depth 5	36 to 38
ø16 or equiv.	37	12	37	12	14	12	8.5	27	6	14	17.5	66	149	152	3	M3 depth 5	132	21	M5	88	48	32	15	M3 depth 5	39 to 41
ø20 or equiv.	44	14	42	16	16	16	10.5	31	8.5	18.5	22	74	169	171.5	2.5	M4 depth 6.5	148	24.5	Rc1/8	100	60	38	18	M4 depth 6	43 to 45

Code	With switch																
Bore size (mm)	HD			RD			PA	PB			PP						
	M*	T*Y*	T*W	M*	T*Y*	T*W		T*Y*	T2YD	T*W*	M*V	M*H	T*YV	T*YH	T2YD	T*WV	T*WH
ø12 or equiv.	40.5	36	32	60.5	65	69	24.3	35	34	33.5	24.5	23	26	23	28.4	20.7	17.2
ø16 or equiv.	47	42	38	67	72	76	26.3	35	34	33.5	26.5	25	28	25	30.4	22.7	19.2
ø20 or equiv.	52.5	48	44	72.5	77	81	29.3	35	34	33.5	29.5	28	31	28	33.4	25.7	22.2

*1: For dimensions with options and dimensions of accessories, refer to pages 1588, 1589, 1622 and 1623.

Dimensions (ø12 to ø20 equiv.)

● With foot bracket SRL3-G-LB-12 to 20

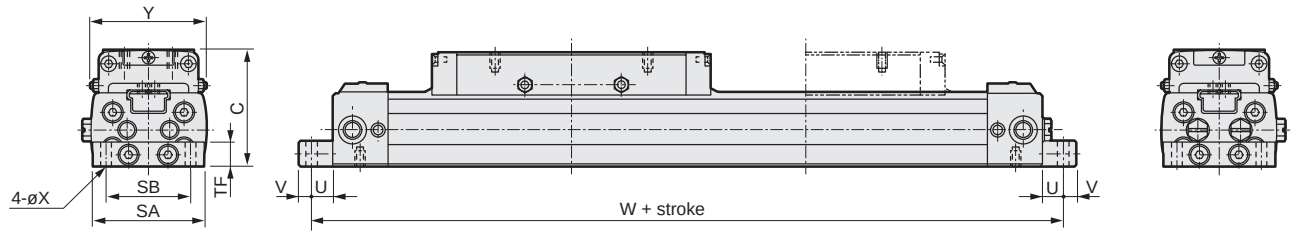

● With foot bracket SRL3-G-LB1-12 to 20

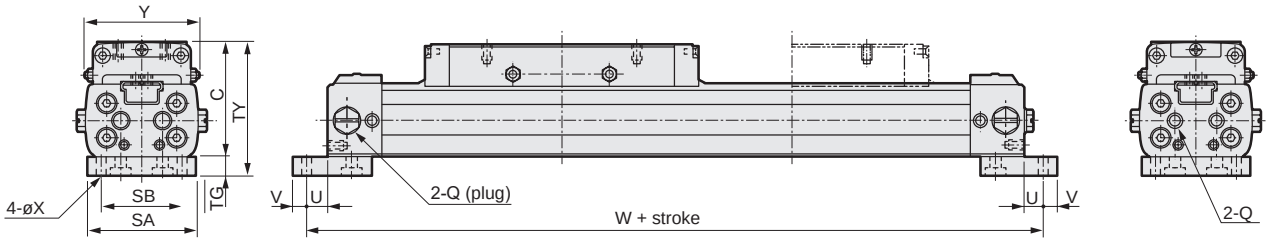

Code	With foot bracket (LB)							With foot bracket (LB1)							
Bore size (mm)	SA	SB	TF	U	V	W	X	SA	SB	TG	TY	U	V	W	X
ø12 or equiv.	32	24	8	6	4	148	3.4	32	24	6	39	6	4	148	3.4
ø16 or equiv.	35	26	8	6	4	161	3.4	35	26	6	43	6	4	161	3.4
ø20 or equiv.	43	33	10	6	6	181	4.5	43	33	8	50	6	6	181	4.5

SCP*3
CMK2
CMA2
SCM
SCG
SCA2
SCS2
CKV2
CAV2/ COVP/N2
SSD2
SSG
SSD
CAT
MDC2
MVC
SMG
MSD/ MSDG
FC*
STK
SRL3
SRG3
SRM3
SRT3
MRL2
MRG2
SM-25
ShkAbs
FJ
FK
Spd Contr
Ending

Dimensions (ø25 to ø63 equiv.)

● With cylinder switch SRL3-G-**-**-***-M*V*
(L-shaped lead wire)

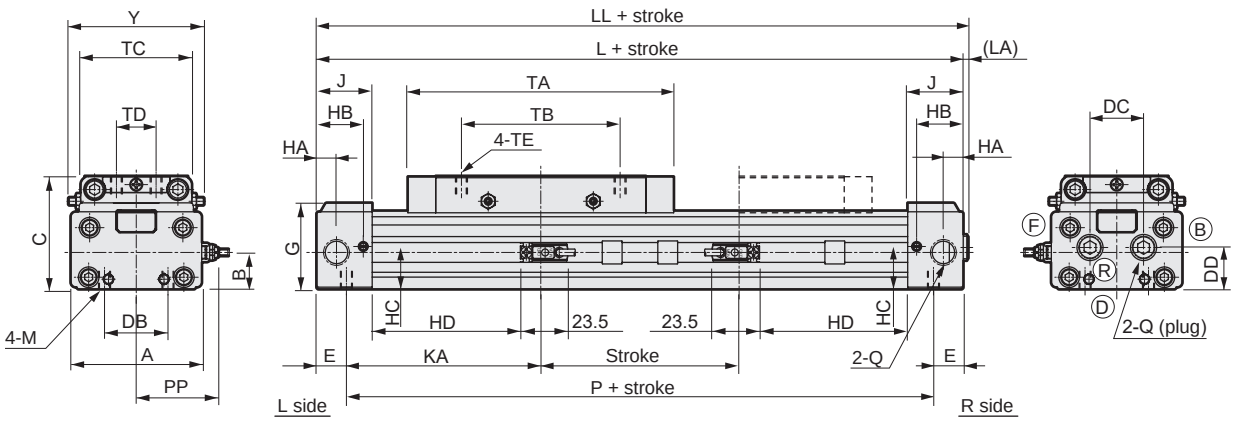

● Bottom piping (option code: D/S)

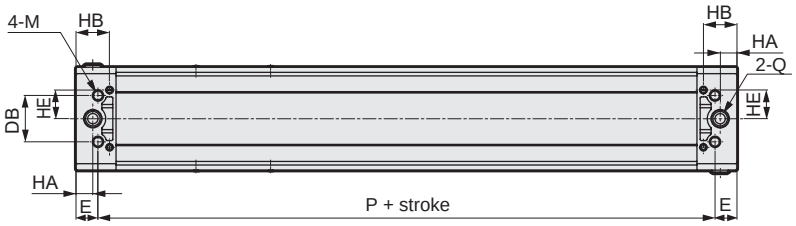

Code / Bore size (mm)	A	B	C	DB	DC	DD	E	G	HA	HB	HC	HE	J	KA	L	LL	LA	M	P	Q	TA	TB	TC	TD	TE	Y
ø25 or equiv.	53	17	53	20	26	19	14	40.5	7.5	20	18.9	-	24	81	190	192	2	M6 depth 9	162	Rc1/8	122	70	48	20	M5 depth 6	58 to 61
ø32 or equiv.	66	18.5	57	32	27	21	15	43.5	10	23.5	21.5	17	28	98	226	228.5	2.5	M6 depth 9	196	Rc1/4	134	80	56	20	M6 depth 7.5	65 to 69
ø40 or equiv.	80	22	67	36	35	28	17	51.5	13	26	27	22.3	31	105	244	246.5	2.5	M8 depth 12	210	Rc1/4	148	90	68	30	M6 depth 9	77 to 81
ø50 or equiv.	96	28	82	45	35	35	23	61	15	33	35.3	11	39	106	258	260.5	2.5	M8 depth 12	212	Rc3/8	152	100	80	30	M8 depth 10.5	92 to 96
ø63 or equiv.	118	35	95	50	39	42	19	74	15	32	43	31	39	129	296	298.5	2.5	M10 depth 15	258	Rc3/8	168	110	102	40	M8 depth 11.5	114 to 118

Code	With switch																
Bore size (mm)	HD			RD			PA	PB			PP						
	M*	T*Y*	T*W	M*	T*Y*	T*W		T*Y*	T2YD	T*W*	M*V	M*H	T*YV	T*YH	T2YD	T*WV	T*WH
ø25 or equiv.	60	56	52	82	86	90	34.3	35	34	33.5	34.5	33	36	33	38.4	30.7	27.2
ø32 or equiv.	74	70	66	96	100	104	41.3	35	34	33.5	41.5	40	43	40	45.4	37.7	34.2
ø40 or equiv.	80	76	72	102	106	110	48.3	35	34	33.5	48.5	47	50	47	52.4	44.7	41.2
ø50 or equiv.	79	75	71	101	105	109	56.3	35	34	33.5	56.5	55	58	55	60.4	52.7	49.2
ø63 or equiv.	98	94	90	120	124	128	67.3	35	34	33.5	67.5	66	69	66	71.4	63.7	60.2

*1 : For dimensions with options and dimensions of accessories, refer to pages 1588, 1589, 1622 and 1623.
*2 : Bottom piping is not available for ø25.

Dimensions (ø25 to ø63 equiv.)

● With cylinder switch SRL3-G-**-**-***-M*H*
(straight lead wire)

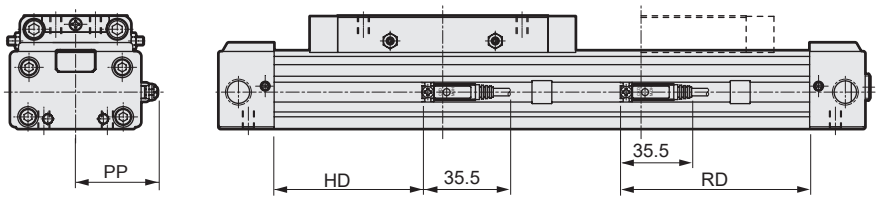

● With cylinder switch SRL3-G-**-**-***-T*H (T*W, T*Y, T2YD)

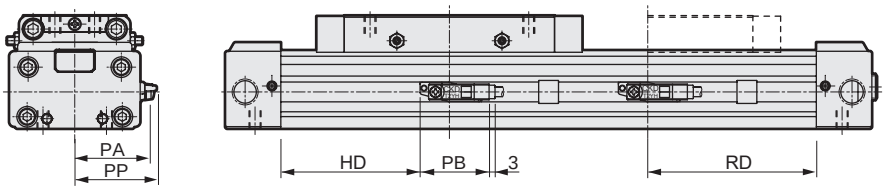

● With cylinder switch SRL3-G-**-**-***-T*V (T*W, T*Y)

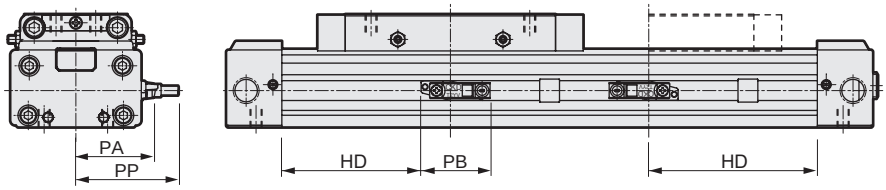

RD: Max. sensitivity installation position HD: Max. sensitivity installation position

● With foot bracket SRL3-G-LB-25 to 63

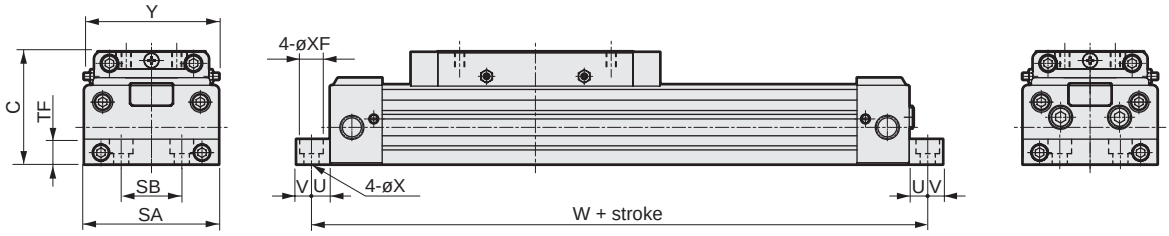

● With foot bracket SRL3-G-LB1-25, 32 (The mounting LB1 is not available for ø40 to ø63 or equiv.)

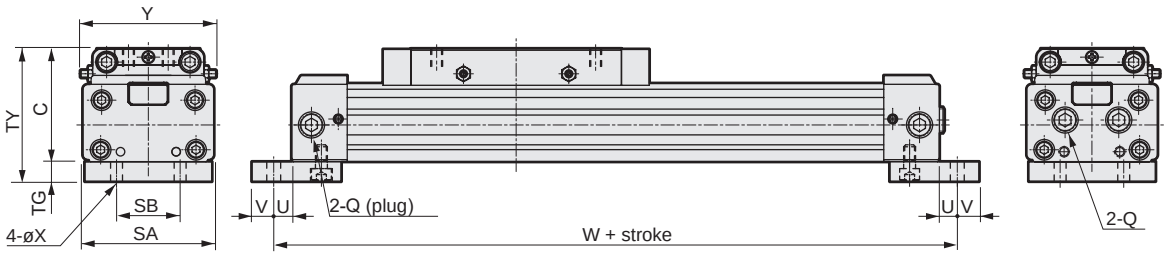

Code	With foot bracket (LB)								With foot bracket (LB1)							
Bore size (mm)	SA	SB	TF	U	V	W	X	XF	SA	SB	TG	TY	U	V	W	X
ø25 or equiv.	52	20	12	9	11	208	7	-	50	20	10	63	9	11	208	7
ø32 or equiv.	64	32	12	9	11	244	7	-	64	32	10	67	9	11	244	7
ø40 or equiv.	80	36	15	11	9	266	9	14 spot face depth 8.6	-	-	-	-	-	-	-	-
ø50 or equiv.	94	45	20	11	9	280	9	14 spot face depth 8.6	-	-	-	-	-	-	-	-
ø63 or equiv.	116	50	25	13	12	322	11	17.5 spot face depth 10.8	-	-	-	-	-	-	-	-

SCP*3
CMK2
CMA2
SCM
SCG
SCA2
SCS2
CKV2
CAV2/COVP/N2
SSD2
SSG
SSD
CAT
MDC2
MVC
SMG
MSD/MSDG
FC*
STK
SRL3
SRG3
SRM3
SRT3
MRL2
MRG2
SM-25
ShkAbs
FJ
FK
Spd Contr
Ending

Dimensions (ø80 to ø100 equiv.)

CAD

● With cylinder switch SRL3-G-**-**-***-M*V*
(L-shaped lead wire)

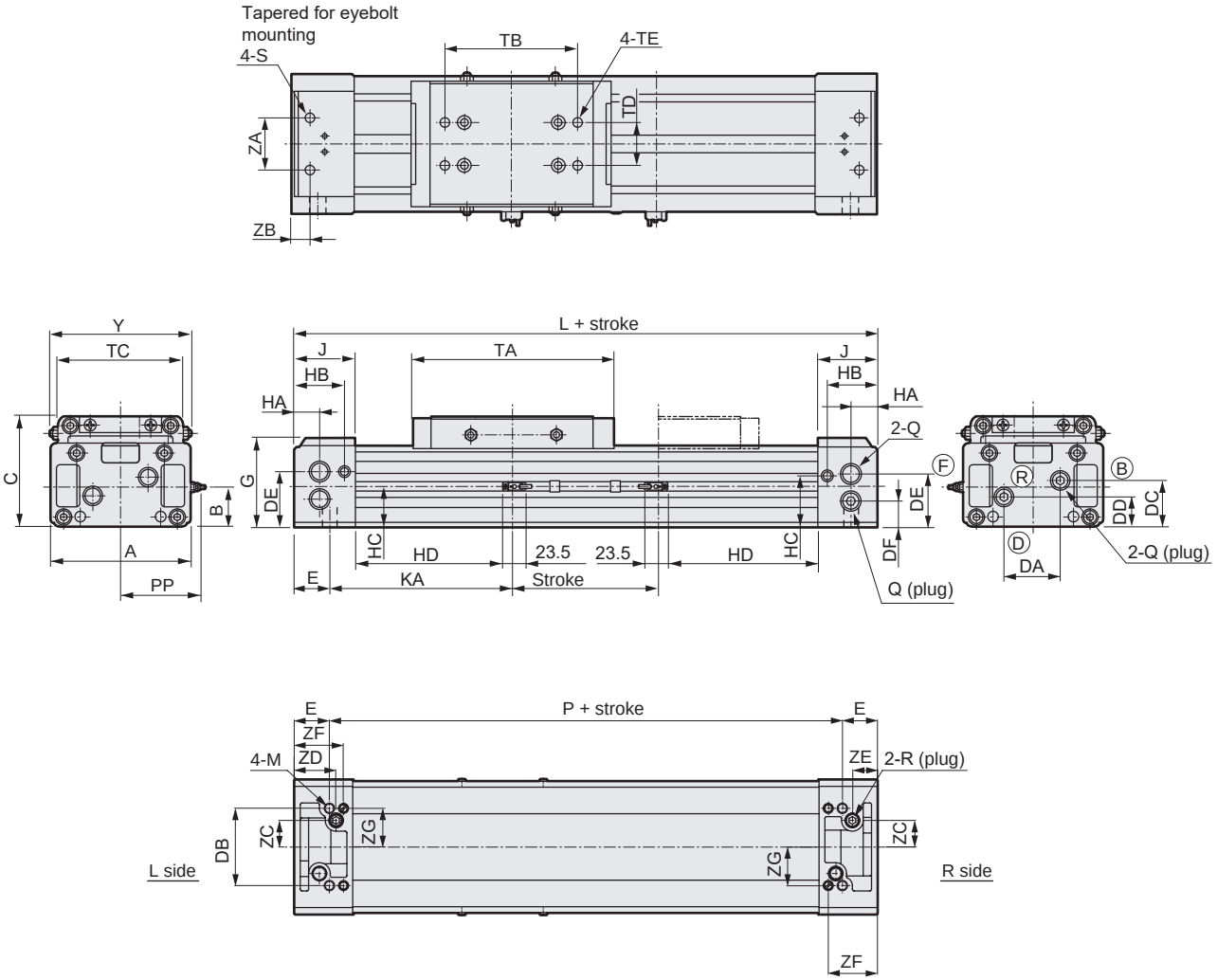

Code / Bore size (mm)	A	B	C	DA	DB	DC	DD	DE	DF	E	G	HA	HB	HC	J	KA	L	M	P	Q	R	S
ø80 or equiv.	162	49	130	64	93	58	38	65	33	42	106	30	59	64.5	70	208	500	M12 depth 18	416	Rc1/2	Rc3/8	M12 depth 23
ø100 or equiv.	198	61.5	150	73	108	71.5	47.5	81.5	41.5	43	125	30	69	76.5	80	222	530	M12 depth 18	444	Rc1/2	Rc1/2	M12 depth 23

Code / Bore size (mm)	TA	TB	TC	TD	TE	Y	ZA	ZB	ZC	ZD	ZE	ZF	ZG	With foot bracket						
														SA	SB	TF	U	V	W	X
ø80 or equiv.	228	150	146	50	M12 depth 15	157 to 164	60	21	64	50	30	59	46.5	162	134	25	13	12	526	14
ø100 or equiv.	238	160	170	60	M12 depth 15	183 to 190	60	21	73	55	30	69	54	198	160	30	15	15	560	14

*1: For dimensions with options and dimensions of accessories, refer to pages 1588, 1589, 1622 and 1623.

Dimensions (ø80 to ø100 equiv.)

CAD

● With cylinder switch SRL3-G-**-**-***-M*H*
(Axial lead wire)

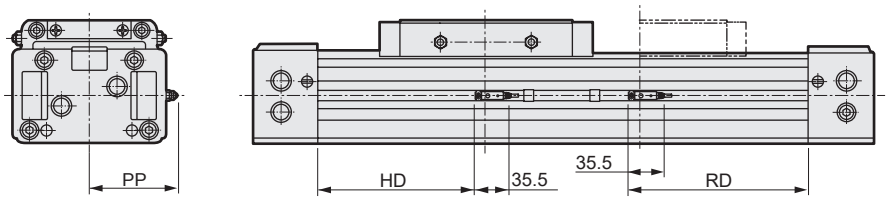

RD: Max. sensitivity mounting position
HD: Max. sensitivity mounting position

● With cylinder switch SRL3-G-**-***-T*H (T*W, T*Y, T2YD)

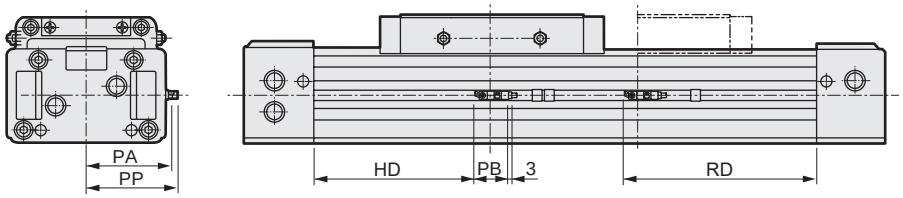

● With cylinder switch SRL3-G-**-***-T*V (T*T*W, T*Y)

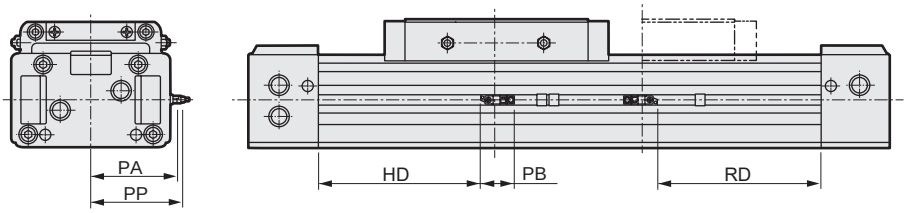

● With foot bracket SRL3-G-LB-**-***

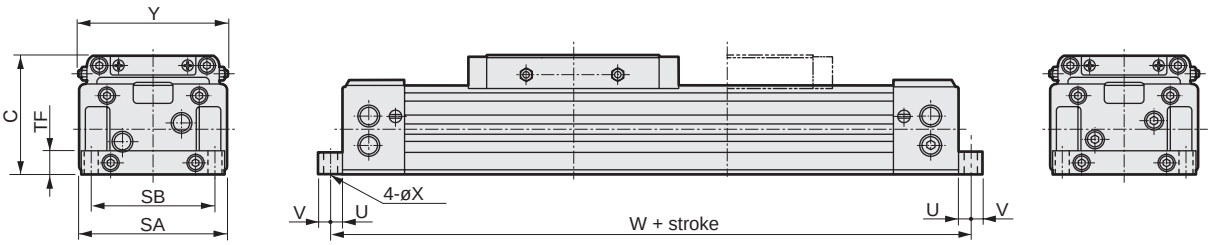

Code	With switch																
Bore size (mm)	HD			RD			PA	PB			PP						
	M*	T*Y*	T*W	M*	T*Y*	T*W		T*Y*	T2YD	T*W*	M*V	M*H	T*YV	T*YH	T2YD	T*WV	T*WH
ø80 or equiv.	170	165	161	190	195	199	87.3	35	34	33.5	87.5	86	89	86	91.4	83.7	80.2
ø100 or equiv.	175	170	166	195	200	204	105.3	35	34	33.5	105.5	104	107	104	109.4	101.7	98.2

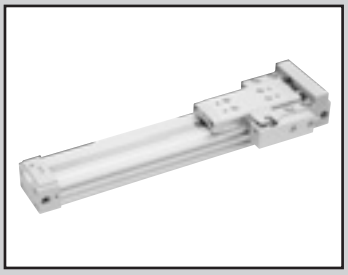

Rodless cylinder double acting/position locking

SRL3-Q Series

● Bore size: ø12, ø16, ø20, ø25, ø32
ø40, ø50, ø63, ø80, ø100

JIS symbol

RoHS CAD

Specifications

Item		SRL3-Q									
Bore size mm		ø12	ø16	ø20	ø25	ø32	ø40	ø50	ø63	ø80	ø100
Actuation		Double acting									
Working fluid		Compressed air									
Max. working pressure MPa		0.7 (≈100 psi, 7 bar)									
Min. working pressure MPa		0.2 (≈29 psi, 2 bar)			0.15 (≈22 psi, 1.5 bar)			0.1 (≈15 psi, 1 bar)			
Proof pressure MPa		1.05 (≈150 psi, 10.5 bar)									
Ambient temperature °C		5 (41°F) to 60 (140°F)									
Port size	Cylinder	M5		Rc1/8		Rc1/4		Rc3/8		Rc1/2	
	Position locking part	M5		Rc1/8							
Stroke tolerance mm		$^{+2.0}_{0}$ (to 1000)			$^{+2.5}_{0}$ (to 3000)			$^{+3.0}_{0}$ (to 5000)			
Working piston speed mm/s		50 to 2000 (standard piping) (*1)									
Cushion		Air cushion									
Lubrication		Not required (use turbine oil class 1 ISO VG32 if necessary for lubrication. Once lubricated, the cylinder will need periodic lubrication.)									
Position locking mechanism		Attached to R side of cover									
Holding force N		Max. thrust x 0.7									

*1: (1) When the piston moves at 500 to 2000 mm/s, reduce the speed when entering the position locking mechanism to 500 mm/s or less. For common port piping, the working piston speed varies depending on the stroke. Contact CKD.
(2) To reduce the speed, add an external shock absorber or deceleration circuit.
(3) Apply grease regularly to the sliding part of the lock lever.

Allowable absorbed energy

Bore size (mm)	Cushioned		Without cushion	With shock absorber (initial set point)	
	Max absorbed energy (J)	Cushion stroke (mm)	Max absorbed energy (J)	Absorbed energy (J)	Effective stroke (mm)
ø12 or equiv.	0.03	14.5	0.003	2.4	5.5
ø16 or equiv.	0.22	19.2	0.007	2.4	5.5
ø20 or equiv.	0.59	22.2	0.010	5.7	7
ø25 or equiv.	1.40	20.9	0.015	10	9
ø32 or equiv.	2.57	23.5	0.030	18	13
ø40 or equiv.	4.27	23.9	0.050	50	16.5
ø50 or equiv.	9.13	24.9	0.072	86	21
ø63 or equiv.	17.4	29.6	0.138	86	21
ø80 or equiv.	40	45.8	0.393	143	25
ø100 or equiv.	67	45.8	0.622	143	25

Stroke

Bore size (mm)	Standard stroke (mm)	Max. stroke (mm)	Min. stroke (mm)
ø12 equiv. ø16 equiv. ø20 equiv. ø25 equiv. ø32 equiv. ø40 equiv. ø50 equiv. ø63 equiv. ø80 equiv. ø100 equiv.	200/300 400/500 600/700 800/900 1000	5000	5

* The custom stroke is available in 1 mm increments.

Number of installed M-switches and min. stroke (mm)

Switch quantity	1		2		3		4		5		6	
Switch model No. / Bore size (mm)	M*V	M*H	M*V	M*H	M*V	M*H	M*V	M*H	M*V	M*H	M*V	M*H
ø12 or equiv.	10	10	30	70	60	120	90	170	120	220	150	270
ø16 or equiv.	10	10	30	70	60	120	90	170	120	220	150	270
ø20 or equiv.	10	10	30	70	60	120	90	170	120	220	150	270
ø25 or equiv.	10	10	30	70	60	120	90	170	120	220	150	270
ø32 or equiv.	10	10	30	45	60	90	90	135	120	180	150	225
ø40 or equiv.	10	10	30	45	60	90	90	135	120	180	150	225
ø50 or equiv.	15	15	30	45	60	90	90	135	120	180	150	225
ø63 or equiv.	15	15	30	45	60	90	90	135	120	180	150	225
ø80 or equiv.	25		50		100		150		200		250	
ø100 or equiv.	25		50		100		150		200		250	

Number of installed T-switches and min. stroke (mm)

Switch quantity	1		2		3		4		5		6	
Switch model No. / Bore size (mm)	T*V	T*H	T*V	T*H	T*V	T*H	T*V	T*H	T*V	T*H	T*V	T*H
ø12 or equiv.	5	5	45	70	85	120	125	170	165	220	205	270
ø16 or equiv.	5	5	45	70	85	120	125	170	165	220	205	270
ø20 or equiv.	5	5	45	70	85	120	125	170	165	220	205	270
ø25 or equiv.	10	10	45	70	85	120	125	170	165	220	205	270
ø32 or equiv.	10	10	45	50	85	100	125	150	165	200	205	250
ø40 or equiv.	10	10	45	50	85	100	125	150	165	200	205	250
ø50 or equiv.	10	10	45	50	85	100	125	150	165	200	205	250
ø63 or equiv.	10	10	45	50	85	100	125	150	165	200	205	250
ø80 or equiv.	15	15	45	50	85	100	125	150	165	200	205	250
ø100 or equiv.	15	15	45	50	85	100	125	150	165	200	205	250

⚠ Be sure to read the Safety Precautions for (Position locking) on pages 1639 and 1642 to 1644 before use.

Switch specifications (M-switch)

● 1-color/2-color LED

Item	2-wire proximity		3-wire proximity		
	M2V,M2H	M2WV (2-color LED)	M3H/M3V	M3PH/M3PV (made to order)	M3WV
Applications	Dedicated for programmable controller		For programmable controller, relay, IC circuit, compact solenoid valve		
Output method	-		NPN output	PNP output	NPN output
Power supply voltage	-		4.5 to 28 VDC		10 to 28 VDC
Load voltage	10 to 30 VDC		30 VDC or less		
Load current	5 to 30 mA		100 mA or less	100 mA or less	100 mA or less
Indicator	LED (Lit when ON)	Red/green LED (Lit when ON)	LED (Lit when ON)	Yellow LED (Lit when ON)	Red/green LED (Lit when ON)
Leakage current	1 mA or less		10 μA or less	0.05 mA or less	10 μA or less
Weight g	1 m:22 3 m:57 5 m:93				

Item	2-wire reed			
	M0V,M0H		M5V,M5H	
Applications	For programmable controller, relay		For programmable controller, relay, IC circuit (without indicator lamp), serial connection	
Power supply voltage	-		-	
Load voltage	12/24 VDC	110 VAC	5/12/24 VDC	110 VAC or less
Load current	5 to 50 mA	7 to 20 mA	50 mA or less	20 mA or less
Indicator	LED (Lit when ON)		No indicator lamp	
Leakage current	0 mA			
Weight g	1 m:22 3 m:57 5 m:93			

*1: Refer to Ending Page 1 for detailed switch specifications and dimensions.

Switch specifications (T-switch)

● 2-color LED

Item	2-wire proximity		3-wire proximity	
	T2YH/T2YV	T2WH/T2WV	T3YH/T3YV	T3WH/T3WV
Applications	Dedicated for programmable controller		For programmable controller, relay	
Output method	-		NPN output	NPN output
Power supply voltage	-		10 to 28 VDC	
Load voltage	10 to 30 VDC	24 VDC ±10%	30 VDC or less	
Load current	5 to 20 mA		50 mA or less	
Indicator	Red/green LED (Lit when ON)	Red/green LED (Lit when ON)	Red/green LED (Lit when ON)	Red/green LED (Lit when ON)
Leakage current	1 mA or less		10 μA or less	
Weight g	1 m:33 3 m:87 5 m:142	1 m:18 3 m:49 5 m:80	1 m:33 3 m:87 5 m:142	1 m:18 3 m:49 5 m:80

● For AC magnetic field

Item	2-wire proximity
	T2YD,T2YDT (*4)
Applications	Dedicated for programmable controller
Indicator	Red/green LED (Lit when ON)
Load voltage	24 VDC ±10%
Load current	5 to 20 mA
Internal voltage drop	6V or less
Leakage current	1.0 mA or less
Weight g	1 m:61 3 m:166 5 m:272

*1: Refer to Ending Page 1 for detailed switch specifications and dimensions.
*2: Switches other than the above models, such as switches with connectors, are also available. Refer to Ending Page 1.
*3: The max. load current is 20 mA at 25°C. The current is lower than 20 mA if the operating ambient temperature around the switch is higher than 25°C. (5 to 10 mA at 60°C)
*4: AC magnetic field proof switch (T2YD/T2YDT) cannot be used in DC magnetic field.

Cylinder weight

Unit: kg

Bore size (mm)	Weight for 0 mm stroke				Mounting bracket weight		Additional weight per St = 100mm
	Basic (00)	Foot (LB)	Foot (LB1)	Switch weight	T type	M type	
ø12 or equiv.	0.38	0.39	0.40	Refer to the weight in the switch specifications.	0.005	0.001	0.10
ø16 or equiv.	0.47	0.48	0.50				0.13
ø20 or equiv.	0.74	0.76	0.80				0.18
ø25 or equiv.	1.5	1.6	1.6				0.28
ø32 or equiv.	2.4	2.5	2.6				0.36
ø40 or equiv.	3.6	3.7	-				0.53
ø50 or equiv.	6.0	6.1	-				0.75
ø63 or equiv.	8.8	9.1	-				1.11
ø80 or equiv.	22.4	23.0	-				2.32
ø100 or equiv.	30.5	31.5	-				3.38

SCP*3
CMK2
CMA2
SCM
SCG
SCA2
SCS2
CKV2
CAV2/COVP/N2
SSD2
SSG
SSD
CAT
MDC2
MVC
SMG
MSD/MSDG
FC*
STK
SRL3
SRG3
SRM3
SRT3
MRL2
MRG2
SM-25
ShkAbs
FJ
FK
Spd Contr
Ending

How to order

No switch (built-in magnet for switch)

SRL3-Q - 00 - 12 ( ) B - 200 ——— B

With switch (built-in magnet for switch)

SRL3-Q - 00 - 12 ( ) B - 200 - M0H - R - B

Ⓐ Mounting *1, *2

Ⓑ Bore size

Ⓒ Port thread

Ⓓ Cushion

Ⓔ Stroke

Ⓕ Switch model No. *4

Ⓖ Switch quantity

Ⓗ Option *5, *6 *7, *8 *9, *10

Code	Description
Ⓐ Mounting	
00	Basic
LB	Axial foot
LB1	Axial foot (ø12 to ø32 only)
Ⓑ Bore size (mm)	
12	ø12
16	ø16
20	ø20
25	ø25
32	ø32
40	ø40
50	ø50
63	ø63
80	ø80
100	ø100
Ⓒ Port thread	
Blank	Rc thread (M5 for ø12 and ø16)
N	NPT thread (ø20 or more) (made-to-order product)
G	G thread (ø20 or more) (made-to-order product)
Ⓓ Cushion	
B	Both sides cushioned
R	R side cushioned
L	L side cushioned
N	Without cushion

Ⓔ Stroke (mm)

Bore size	Stroke *3	Custom stroke
ø12 to ø100	5 to 5000	In 1 mm increments

Ⓕ Switch model No.

Axial lead wire	Radial lead wire	Contact	Voltage AC	Voltage DC	Indicator	Lead wire
M0H*	M0V*	Reed	●	●	1-color LED	2-wire
M5H*	M5V*	Reed	●	●	No indicator lamp	2-wire
M2H*	M2V*	Proximity		●	1-color LED	
-	M2WV*	Proximity		●	2-color LED	2-wire
M3H*	M3V*	Proximity		●	1-color LED	
-	M3WV*	Proximity		●	2-color LED	3-wire
M3PH*	M3PV*	Proximity		●	1-color LED (custom)	3-wire
T2WH*	T2WV*	Proximity		●	2-color LED	2-wire
T2YH*	T2YV*	Proximity		●	2-color LED	2-wire
T3WH*	T3WV*	Proximity		●	2-color LED	3-wire
T3YH*	T3YV*	Proximity		●	2-color LED	3-wire
T2YD*	-	Proximity		●	2-color LED for AC magnetic field	2-wire
T2YDT*	-	Proximity		●	2-color LED for AC magnetic field	2-wire

*** Lead wire length**

Blank	1 m (standard)
3	3 m (option)
5	5 m (option)

Ⓖ Switch quantity

R	1 on R side
L	1 on L side
D	2
T	3
4	4 (when there are more than 4 switches, indicate switch quantity.)

Ⓗ Option

	Bore size (ø)	12	16	20	25	32	40	50	63	80	100
A	Both-sides full stroke adjustable, shock absorber	●	●	●	●	●	●	●	●	●	●
A1	R side full stroke adjustable, shock absorber	●	●	●	●	●	●	●	●	●	●
A2	L side full stroke, adjustable, shock absorber	●	●	●	●	●	●	●	●	●	●
A3	Full stroke adjustable, adjusting bracket to be added	●	●	●	●						
Y	Floating fitting	●	●	●	●	●	●	●	●	●	●
Y1	Thin floating fitting	●	●	●	●						
L*	Intermediate support bracket (for 00, LB)	●	●	●	●	●	●	●	●	●	●
N*	Intermediate support bracket (for LB1)	●	●	●	●	●					
H	Larger thread for table installation	●	●	●							
U	Height adjustment plate	●	●	●	●	●	●	●	●	●	●
Blank	Port position: F (Standard) / Cushion needle position: F (Standard)	●	●	●	●	●	●	●	●	●	●
R	Port position: R (Common port) / Cushion needle position: F	●	●	●	●	●	●	●	●	●	●
B	Port position: F / Cushion needle position: B	●	●	●	●	●	●	●	●	●	●
T	Port position: R (Common port) / Cushion needle position: B	●	●	●	●	●	●	●	●	●	●
D	Port position: D / Cushion needle position: F				●	●	●	●	●	●	●
S	Port position: D / Cushion needle position: D					●	●	●	●	●	●
X	Port position: F (Common port) / Cushion needle position: F									●	●

Precautions for model No. selection

*1 : Mounting bracket will be shipped assembled with the product.

*2 : For 12, 16, 20, 25 and 32 bore sizes with option code "R" or "T", the mounting will be "00" or "LB1". (Piping with "LB" is not possible for option codes "R" and "T".)

*3 : Refer to page 1604 for the min. stroke with switch.

*4 : Switches other than Ⓕ Switch model No. are also available. (Made to order) Refer to Ending Page 1 for details.

*5 : The full stroke adjusting bracket on R side is provided as standard for the position locking. Therefore, if "A1" is selected, a shock absorber only is added to R side. In the case of "A", R side is position locking and full stroke adjustable with shock absorber, and L side is full stroke adjustable with shock absorber. (Figure below)

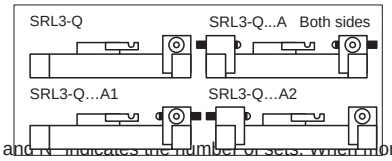

6 : "" of L* and N* indicates the number of sets. When more than one set are necessary, specify "L2" (for LB) or "N2" (for LB1).
2 pcs./set

*7 : For the port and cushion needle position codes, refer to dimensions on pages 1582 to 1587.

*8 : In the case of the standard with ø12 to ø25, remove the cover, attach a flat nut and install the full stroke adjusting bracket. A flat nut is attached to option "A3" to enable retrofitting the full stroke adjusting bracket without removing the cover.

*9 : In "H", the thread size for ø12 and ø16 will be "M4" and that for ø20 will be "M5".

*10 : Check the option combinations in "Option selection table" on the next page.

*11 : Copper and PTFE free as standard. (except for type with shock absorber)

[Example of model No.]

SRL3-Q-00-12B-200-M0H-R-B

Model: Rodless cylinder position locking

Ⓐ Mounting	: Basic
Ⓑ Bore size	: ø12 mm
Ⓒ Port thread	: M5
Ⓓ Cushion	: Both sides cushioned
Ⓔ Stroke	: 200 mm
Ⓕ Switch model No.	: Reed M0H switch, lead wire 1 m
Ⓖ Switch quantity	: 1 on R side
Ⓗ Option	: Port position F, cushion needle position B

Option selection table

●: Available ▒: Not available

	Code	A	A1	A2	A3	Y	Y1	L*	N*	H	U	Blank	R	B	T	D	S	X
		Both side full stroke adjustable, with shock absorber	R side full stroke adjustable, with shock absorber	L side full stroke adjustable, with shock absorber	Full stroke adjustable with adjusting bracket to be added later	Floating fitting	Thin floating fitting	Intermediate support bracket (for 00, LB)	Intermediate support bracket (for LB1)	Larger thread for table installation	Height adjustment plate	Port position F, cushion needle position F (standard)	Port position R, cushion needle position F (common port)	Port position F, cushion needle position B	Port position R, cushion needle position B (common port)	Port position D, cushion needle position F	Port position D, cushion needle position D	Port position F, cushion needle position F (common port)
Option	A					●	●	●	●	●	●	●	●	●	●	●	●	●
	A1					●	●	●	●	●	●	●	●	●	●	●	●	●
	A2					●	●	●	●	●	●	●	●	●	●	●	●	●
	A3					●	●	●	●	●	●	●	●	●	●	●	●	
	Y							●	●			●	●	●	●	●	●	●
	Y1							●	●			●	●	●	●	●	●	
	L*									●	●	●	●	●	●	●	●	●
	N*									●	●	●	●	●	●	●	●	
	H											●	●	●	●	●	●	
	U											●	●	●	●	●	●	●
	Blank																	
	R																	
	B																	
	T																	
	D																	
	S																	
	X																	

*1: Some combinations are not available depending on the bore size. Be sure to check the Ⓗ Option in "How to order" on the previous page.
*2: LB1 with port position D is not possible. (ø25, ø32)

Specifications for rechargeable battery (Catalog No. CC-1226A)

● Design compatible with rechargeable battery manufacturing process

SRL3 - Q - …… - P4*

Theoretical thrust table

(Unit: N)

Bore size (mm)	Operating direction	Working pressure MPa 0.1	0.15	0.2	0.3	0.4	0.5	0.6	0.7
ø12	Push/Pull	-	-	27.7	41.5	55.3	69.1	83.0	96.8
ø16	Push/Pull	-	-	43.2	64.8	86.4	1.08×10^2	1.30×10^2	1.51×10^2
ø20	Push/Pull	-	-	62.9	94.4	1.26×10^2	1.57×10^2	1.89×10^2	2.20×10^2
ø25	Push/Pull	-	81.4	1.08×10^2	1.63×10^2	2.17×10^2	2.71×10^2	3.25×10^2	3.80×10^2
ø32	Push/Pull	-	1.22×10^2	1.63×10^2	2.44×10^2	3.26×10^2	4.07×10^2	4.88×10^2	5.70×10^2
ø40	Push/Pull	-	1.90×10^2	2.53×10^2	3.80×10^2	5.06×10^2	6.33×10^2	7.60×10^2	8.86×10^2
ø50	Push/Pull	-	2.98×10^2	3.98×10^2	5.96×10^2	7.95×10^2	9.94×10^2	1.19×10^3	1.39×10^3
ø63	Push/Pull	3.14×10^2	4.70×10^2	6.27×10^2	9.41×10^2	1.25×10^3	1.57×10^3	1.88×10^3	2.20×10^3
ø80	Push/Pull	5.06×10^2	7.60×10^2	1.01×10^3	1.52×10^3	2.03×10^3	2.53×10^3	3.04×10^3	3.54×10^3
ø100	Push/Pull	7.91×10^2	1.19×10^3	1.58×10^3	2.37×10^3	3.16×10^3	3.95×10^3	4.74×10^3	5.53×10^3

How to order switch (For configurations, refer to pages 1624 to 1626)

● Switch body + mounting bracket set (*1)

SRL3 - M0H*

Switch model No.
(Item Ⓕ on page 1606)

● Switch body only

SW - M0H*

Switch model No.
(Item Ⓕ on page 1606)

* Lead wire length	
Blank	1 m (standard)
3	3 m (option)
5	5 m (option)

* indicates lead wire length.

● Mounting bracket set (*2)

· M-switch

SRL3 - M

· T-switch

SRL3 - T

● Lead wire holder (*3)

SRL3 - MH

*1: "Switch body + mounting bracket set" does not include lead wire holders. Order lead wire holders separately if necessary.
*2: The mounting bracket is different between the M-switch and T-switch.
*3: The quantity of lead wire holders per set is 10.

● How to order discrete shock absorber

SRL3 - 40 - NCK

Bore size
(Item Ⓑ on page 1606)

(One shock absorber, one shock absorber fixing hexagon nut)

(Note) The shock absorber fixing hexagon nut for SRL3-40 is a made-to-order product.

Applicable shock absorber model No.

Model	Shock absorber model No.
SRL3-12	NCK-00-0.3-C
SRL3-16	NCK-00-0.3-C
SRL3-20	NCK-00-0.7-C
SRL3-25	NCK-00-1.2
SRL3-32	NCK-00-2.6
SRL3-40	NCK-00-7
SRL3-50	NCK-00-12
SRL3-63	NCK-00-12
SRL3-80	NCK-00-20
SRL3-100	NCK-00-20

● How to order floating fitting set

SRL3 - 40 - Y

Bore size
(Item Ⓑ on page 1606)

(Mount, mount base, pin, plain washer, pan head machine screw with spring washer)

● How to order discrete intermediate support bracket

For 00/LB

SRL3 - 40 - L (2/set)

Bore size
(Item Ⓑ on page 1606)

For LB1

SRL3 - 32 - N (2/set)

Bore size
(Item Ⓑ on page 1606)

● How to order full stroke adjusting bracket kit

SRL3 - 40 - A1 (1 set)

Bore size
(Item Ⓑ on page 1606)

(For configurations, refer to "Full stroke adjusting bracket kit" on page 1625.)

● How to order repair parts

SRL3-Q - 40 K - 200

Bore size (Item Ⓑ on page 1606) Stroke (Item Ⓔ on page 1606)

● How to order mounting bracket

SRL3 - LB - 40

Mounting (Item Ⓐ on page 1606) Bore size (Item Ⓑ on page 1606)

(Bracket x2, mounting bolt x4)

● How to order height adjustment plate set

SRL3 - 40 - U

Bore size
(Item Ⓑ on page 1606)

(Plate, mounting bolt x4)

Internal structure and parts list (ø12 to ø25 equiv.)

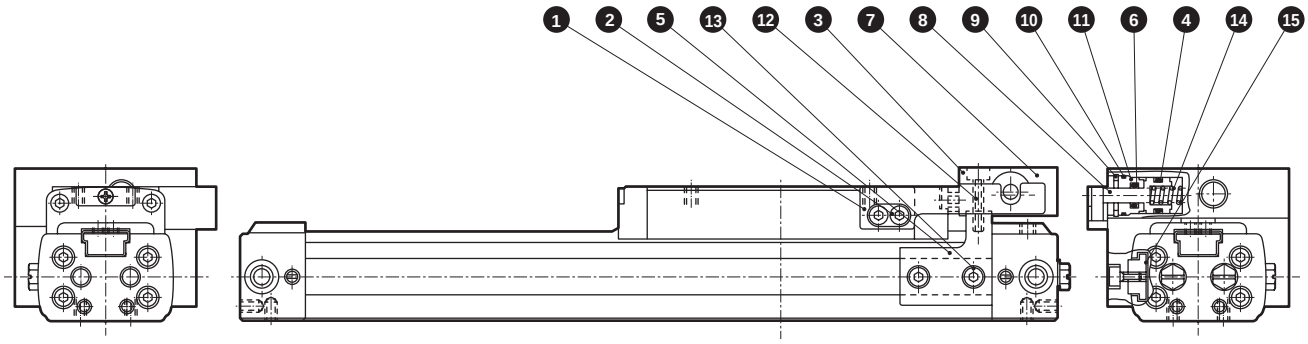

Parts list

No.	Part name	Material	Remarks	No.	Part name	Material	Remarks
1	Lock lever	Alloy steel	Chrome plating	9	C-snap ring for hole	Steel	
2	Hexagon socket head cap screw	Alloy steel	Zinc chromate	10	Gasket	Nitrile rubber	
3	Stopper	Steel	Black finish	11	Rod cover	Aluminum alloy	Alumite
4	Piston packing	Nitrile rubber		12	Hexagon socket head cap screw	Alloy steel	Zinc chromate
5	Adaptor	Steel	Zinc chromate	13	Hexagon socket head cap screw	Alloy steel	Zinc chromate
6	Rod packing	Nitrile rubber		14	Spring	Steel	Electrodeposition
7	Position locking mechanism	Aluminum alloy	Alumite	15	Flat nut	Alloy steel	Black finish
8	Lock pin (stopper piston)	Alloy steel	Chrome plating				

Repair parts list

Bore size (mm)	Kit No.	Repair parts No.
ø12 or equiv.	SRL3-Q-12K-*	❹ ❻ ❿ ⑧ ⑨ ⑱ ㉑ ㉒ ㉖ ㉗ ㉘
ø16 or equiv.	SRL3-Q-16K-*	
ø20 or equiv.	SRL3-Q-20K-*	
ø25 or equiv.	SRL3-Q-25K-*	

*1 : Specify the kit No. when placing an order. Specify the stroke for *.
*2 : Part numbers ⑧⑨⑱㉑㉒㉖㉗㉘ are the same as those on page 1579.

Internal structure and parts list (ø32 to ø63 equiv.)

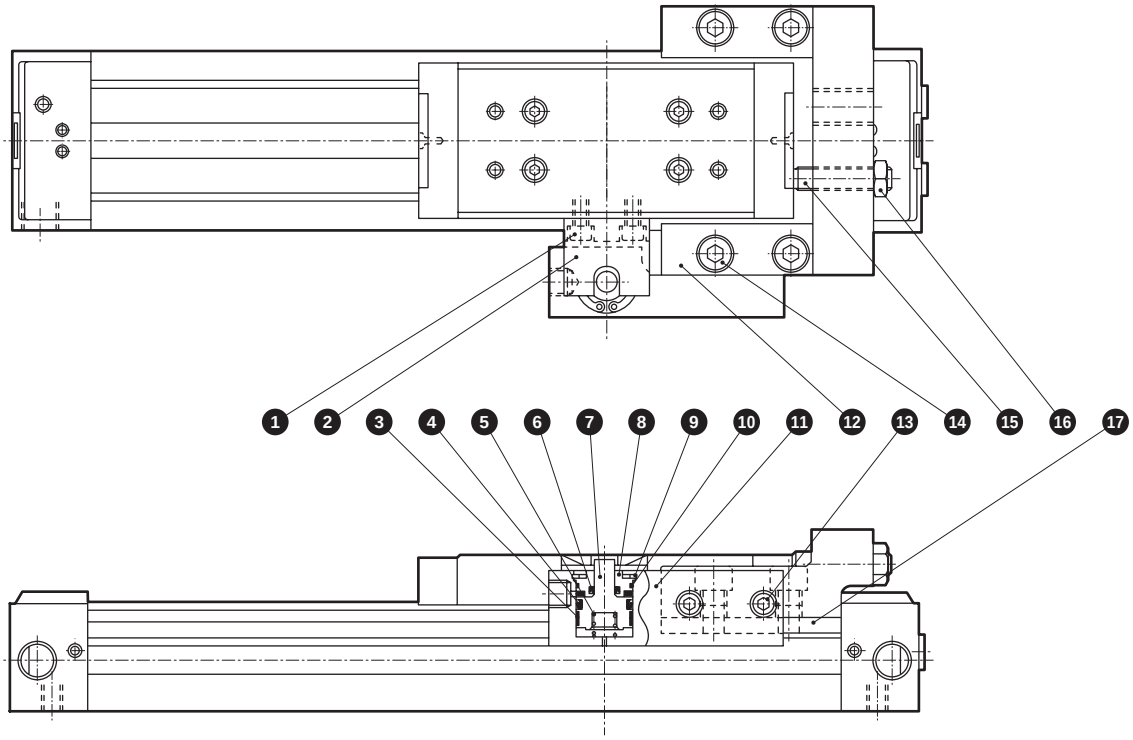

Parts list

No.	Part name	Material	Remarks	No.	Part name	Material	Remarks
1	Hexagon socket head cap screw	Alloy steel	Zinc chromate	10	Gasket	Nitrile rubber	
2	Lock lever	Alloy steel	Zinc chromate	11	Position locking mechanism	Aluminum alloy	Alumite
3	Wear ring	Acetal resin		12	Adaptor	Steel	Zinc chromate
4	Piston packing	Nitrile rubber		13	Hexagon socket head cap screw	Alloy steel	Zinc chromate
5	Spring	Steel	Electrodeposition	14	Hexagon socket head cap screw	Alloy steel	Zinc chromate
6	Rod packing	Nitrile rubber		15	Hexagon socket set screw	Alloy steel	Zinc chromate
7	Lock pin	Alloy steel	Chrome plating	16	Hexagon nut	Steel	Zinc chromate
8	Rod cover	Aluminum alloy	Alumite	17	Adaptor nut	Alloy steel	Zinc chromate
9	C-snap ring for hole	Steel					

Repair parts list

Bore size (mm)	Kit No.	Repair parts No.
ø32 or equiv.	SRL3-Q-32K-*	❸ ❹ ❻ ❿ ⑧ ⑨ ⑱ ㉑ ㉒ ㉖ ㉗ ㉘ (㉜) *3
ø40 or equiv.	SRL3-Q-40K-*	
ø50 or equiv.	SRL3-Q-50K-*	
ø63 or equiv.	SRL3-Q-63K-*	

*1 : Specify the kit No. when placing an order. Specify the stroke for *.
*2 : Part numbers ⑧⑨⑱㉑㉒㉖㉗㉘㉜ are the same as those on pages 1579 and 1580.
*3 : ㉜ is only applicable to ø50 equiv./ø63 equiv.

Internal structure and parts list (ø80, ø100 equiv.)

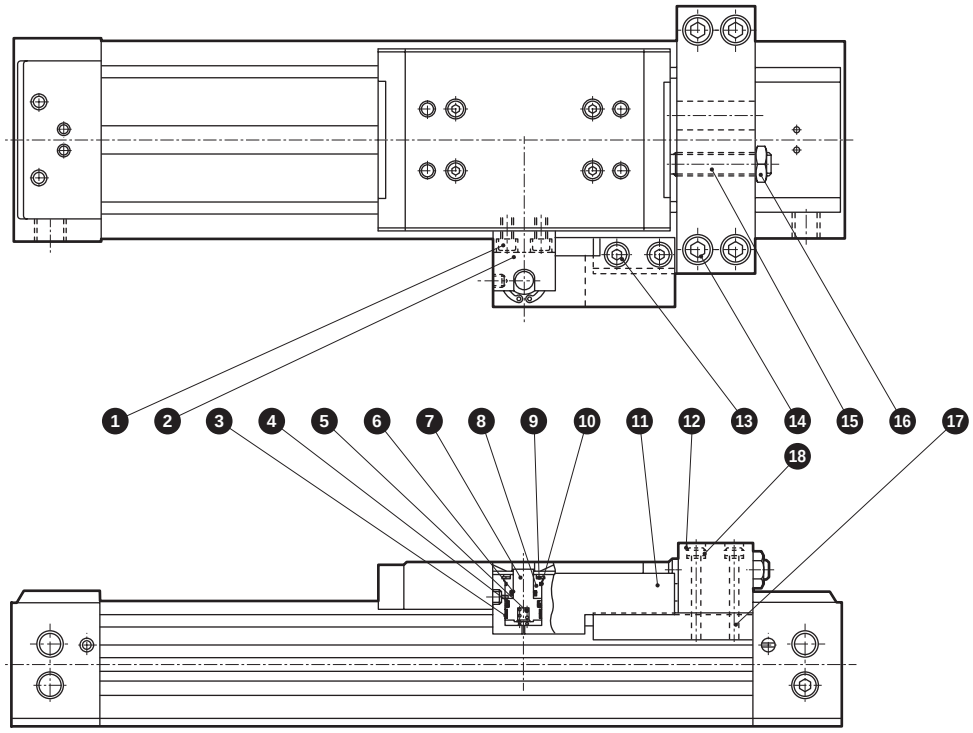

Parts list

No.	Part name	Material	Remarks	No.	Part name	Material	Remarks
1	Hexagon socket head cap screw	Alloy steel	Zinc chromate	10	Gasket	Nitrile rubber	
2	Lock lever	Alloy steel	Zinc chromate	11	Position locking mechanism	Aluminum alloy	Alumite
3	Wear ring	Acetal resin		12	Adaptor	Steel	Zinc chromate
4	Piston packing	Nitrile rubber		13	Hexagon socket head cap screw	Alloy steel	Zinc chromate
5	Spring	Steel	Electrodeposition	14	Hexagon socket head cap screw	Alloy steel	Zinc chromate
6	Rod packing	Nitrile rubber		15	Hexagon socket set screw	Alloy steel	Zinc chromate
7	Lock pin	Alloy steel	Chrome plating	16	Hexagon nut	Steel	Zinc chromate
8	Rod cover	Aluminum alloy	Alumite	17	Adaptor nut	Alloy steel	Zinc chromate
9	C-snap ring for hole	Steel		18	Conical spring washer	Steel	

Repair parts list

Bore size (mm)	Kit No.	Repair parts No.
ø80 or equiv.	SRL3-Q-80K-*	❸ ❹ ❻ ❿ ⑧ ⑨ ⑱ ㉑ ㉒ ㉖ ㉗ ㉘ ㉙ ㉜ ㉝
ø100 or equiv.	SRL3-Q-100K-*	

*1 : Specify the kit No. when placing an order. Specify the stroke for *.

*2 : Part numbers ⑧⑨⑱㉑㉒㉖㉗㉘㉙㉜㉝ are the same as those on page 1581.

SCP*3
CMK2
CMA2
SCM
SCG
SCA2
SCS2
CKV2
CAV2/COVP/N2
SSD2
SSG
SSD
CAT
MDC2
MVC
SMG
MSD/MSDG
FC*
STK
SRL3
SRG3
SRM3
SRT3
MRL2
MRG2
SM-25
ShkAbs
FJ
FK
Spd Contr
Ending

Dimensions (ø12 to ø25 equiv.)

*1: For dimensions other than those below, refer to pages 1582 to 1585.
*2: For dimensions with options and dimensions of accessories, refer to pages 1588, 1589, 1622 and 1623.

● SRL3-Q

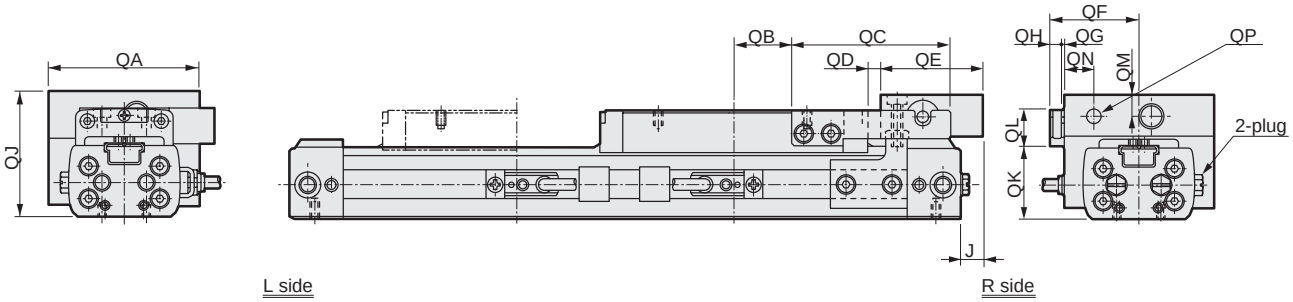

● With foot bracket SRL3-Q-LB1-**-***

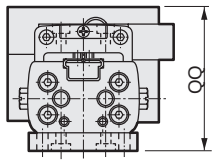

Code / Bore size (mm)	J	QA	QB	QC	QD	QE	QF	QG	QH	QJ	QK	QL	QM	QN	QP	QQ
ø12 or equiv.	0	45	19	46	2.5	25	27.5	1	4	40	21.5	12.5	7	9.5	M5	46
ø16 or equiv.	0	49	19	52	2.5	28	29.5	1	4	42	25	12	7	9.5	M5	48
ø20 or equiv.	-1	57	24	53	2.5	31	33.5	1	4	48	29	13	8	10.5	Rc1/8	56
ø25 or equiv.	5.5	77	26	67.5	2.5	37	43.5	1	4	62.5	36	17	8	10.5	Rc1/8	72.5

Dimensions (ø32 to ø63 equiv.)

*1: For dimensions other than those below, refer to pages 1584 and 1585.
*2: For dimensions with options and dimensions of accessories, refer to pages 1588, 1589, 1622 and 1623.

● SRL3-Q

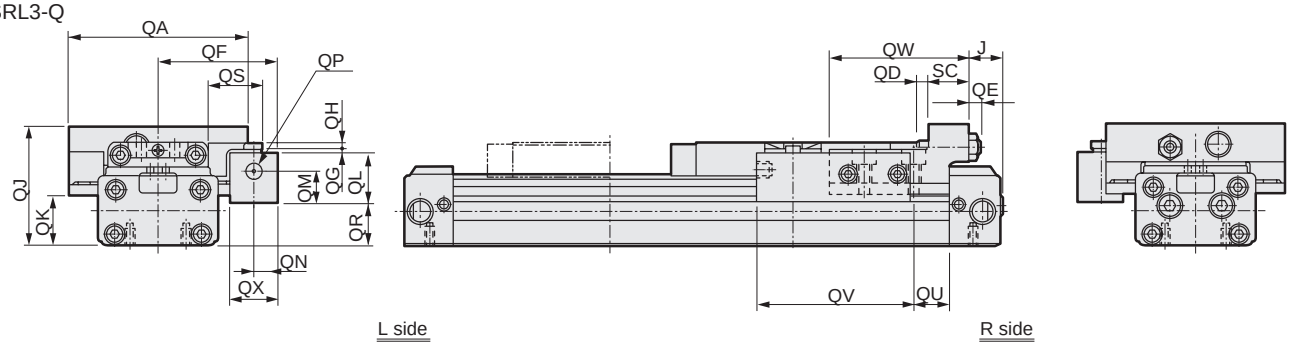

● With foot bracket SRL3-Q-LB1-32-***

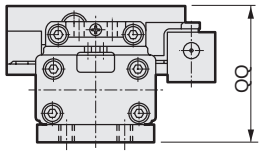

Code / Bore size (mm)	J	QA	QD	QE	QF	QG	QH	QJ	QK	QL	QM	QN	QP	QQ	QR	QS	QU	QV	QW	QX	SC
ø32 or equiv.	19.5	98	7	6	65	2	4	66.5	28	27.5	18	13	Rc1/ 8	88.5	23.5	29	21	84	76	26	22
ø40 or equiv.	11.5	112	7	11	72	2	4	78.5	34	27.5	18	13	Rc1/ 8	-	31.5	29	27	84	87	26	32
ø50 or equiv.	9.5	136	8	9	84	2	5	99	40	33	21.5	15	Rc1/8	-	42	36	12.5	100	102	30	38
ø63 or equiv.	20.5	158	8	14	95	2	5	112	50	33	21.5	15	Rc1/8	-	55	36	31.5	100	91	30	38

Dimensions (ø80, ø100 equiv.)

*1: For dimensions other than those below, refer to pages 1586 and 1587.
*2: For dimensions with options and dimensions of accessories, refer to pages 1588, 1589, 1622 and 1623.

● SRL3-Q

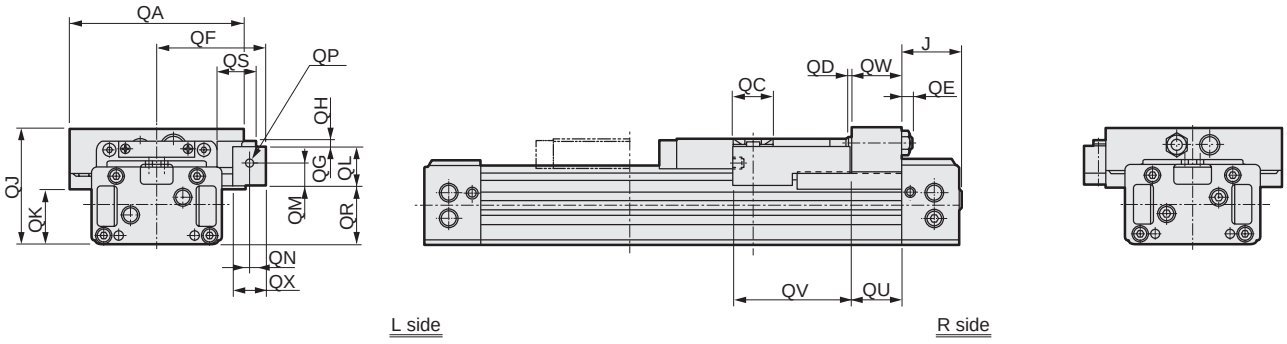

Code / Bore size (mm)	J	QA	QC	QD	QE	QF	QG	QH	QJ	QK	QL	QM	QN	QP	QR	QS	QU	QV	QW	QX
ø80 or equiv.	70	214	50	6	14	133	2	7	145	69	47.5	29	20	Rc1/8	73.5	48	62	143	60	40
ø100 or equiv.	80	250	50	6	14	145	2	7	164	88	47.5	29	20	Rc1/8	92.5	48	62	148	60	40

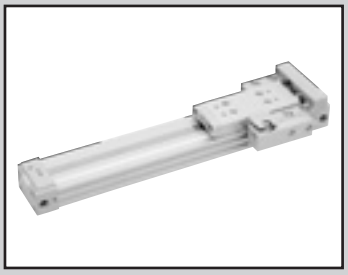

Rodless cylinder double acting/resin guide/position locking

SRL3-GQ Series

● Bore size: ø12, ø16, ø20, ø25, ø32
ø40, ø50, ø63, ø80, ø100

JIS symbol

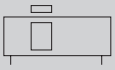

RoHS CAD

Specifications

Item		SRL3-GQ									
Bore size mm		ø12	ø16	ø20	ø25	ø32	ø40	ø50	ø63	ø80	ø100
Actuation		Double acting									
Working fluid		Compressed air									
Max. working pressure MPa		0.7 (≈100 psi, 7 bar)									
Min. working pressure MPa		0.25 (≈36 psi, 2.5 bar)			0.15 (≈22 psi, 1.5 bar)				0.1 (≈15 psi, 1 bar)		
Proof pressure MPa		1.05 (≈150 psi, 10.5 bar)									
Ambient temperature °C		5 (41°F) to 60 (140°F)									
Port size	Cylinder	M5		Rc1/8		Rc1/4		Rc3/8		Rc1/2	
	Position locking part	M5		Rc1/8							
Stroke tolerance mm		$^{+2.0}_{0}$(to 1000), $^{+2.5}_{0}$(to 3000), $^{+3.0}_{0}$(to 5000)									
Working piston speed mm/s		50 to 2000 (standard piping) (*1)									
Cushion		Air cushion									
Lubrication		Not required (use turbine oil class 1 ISO VG32 if necessary for lubrication. Once lubricated, the cylinder will need periodic lubrication.)									
Position locking mechanism		Attached to R side of cover									
Holding force N		Max. thrust x 0.7									

*1: (1) When the piston moves at 500 to 2000 mm/s, reduce the speed when entering the position locking mechanism to 500 mm/s or less. For common port piping, the working piston speed varies depending on the stroke. Contact CKD.
(2) To reduce the speed, add an external shock absorber or deceleration circuit.
(3) Apply grease regularly to the sliding part of the lock lever.

Allowable absorbed energy

Bore size (mm)	Cushioned		Without cushion	With shock absorber (initial set point)	
	Max absorbed energy (J)	Cushion stroke (mm)	Max absorbed energy (J)	Absorbed energy (J)	Effective stroke (mm)
ø12 or equiv.	0.03	14.5	0.003	2.4	5.5
ø16 or equiv.	0.22	19.2	0.007	2.4	5.5
ø20 or equiv.	0.59	22.2	0.010	5.7	7
ø25 or equiv.	1.40	20.9	0.015	10	9
ø32 or equiv.	2.57	23.5	0.030	18	13
ø40 or equiv.	4.27	23.9	0.050	50	16.5
ø50 or equiv.	9.13	24.9	0.072	86	21
ø63 or equiv.	17.4	29.6	0.138	86	21
ø80 or equiv.	40	45.8	0.393	143	25
ø100 or equiv.	67	45.8	0.622	143	25

Stroke

Bore size (mm)	Standard stroke (mm)	Max. stroke (mm)	Min. stroke (mm)
ø12 equiv. ø16 equiv. ø20 equiv. ø25 equiv. ø32 equiv. ø40 equiv. ø50 equiv. ø63 equiv. ø80 equiv. ø100 equiv.	200/300 400/500 600/700 800/900 1000	5000	5

* The custom stroke is available in 1 mm increments.

Number of installed M-switches and min. stroke (mm)

Switch quantity	1		2		3		4		5		6	
Switch model No. / Bore size (mm)	M*V	M*H	M*V	M*H	M*V	M*H	M*V	M*H	M*V	M*H	M*V	M*H
ø12 or equiv.	10	10	30	70	60	120	90	170	120	220	150	270
ø16 or equiv.	10	10	30	70	60	120	90	170	120	220	150	270
ø20 or equiv.	10	10	30	70	60	120	90	170	120	220	150	270
ø25 or equiv.	10	10	30	70	60	120	90	170	120	220	150	270
ø32 or equiv.	10	10	30	45	60	90	90	135	120	180	150	225
ø40 or equiv.	10	10	30	45	60	90	90	135	120	180	150	225
ø50 or equiv.	15	15	30	45	60	90	90	135	120	180	150	225
ø63 or equiv.	15	15	30	45	60	90	90	135	120	180	150	225
ø80 or equiv.	25		50		100		150		200		250	
ø100 or equiv.	25		50		100		150		200		250	

Number of installed T-switches and min. stroke (mm)

Switch quantity	1		2		3		4		5		6	
Switch model No. / Bore size (mm)	T*V	T*H	T*V	T*H	T*V	T*H	T*V	T*H	T*V	T*H	T*V	T*H
ø12 or equiv.	5	5	45	70	85	120	125	170	165	220	205	270
ø16 or equiv.	5	5	45	70	85	120	125	170	165	220	205	270
ø20 or equiv.	5	5	45	70	85	120	125	170	165	220	205	270
ø25 or equiv.	10	10	45	70	85	120	125	170	165	220	205	270
ø32 or equiv.	10	10	45	50	85	100	125	150	165	200	205	250
ø40 or equiv.	10	10	45	50	85	100	125	150	165	200	205	250
ø50 or equiv.	10	10	45	50	85	100	125	150	165	200	205	250
ø63 or equiv.	10	10	45	50	85	100	125	150	165	200	205	250
ø80 or equiv.	15	15	45	50	85	100	125	150	165	200	205	250
ø100 or equiv.	15	15	45	50	85	100	125	150	165	200	205	250

⚠ Be sure to read the Safety Precautions for Position locking on pages 1639 and 1642 to 1644 before use.

Switch specifications (M-switch)

● 1-color/2-color LED

Item	2-wire proximity		3-wire proximity		
	M2V,M2H	M2WV (2-color LED)	M3H/M3V	M3PH/M3PV (made to order)	M3WV
Applications	Dedicated for programmable controller		For programmable controller, relay, IC circuit, compact solenoid valve		
Output method	-		NPN output	PNP output	NPN output
Power supply voltage	-		4.5 to 28 VDC		10 to 28 VDC
Load voltage	10 to 30 VDC		30 VDC or less		
Load current	5 to 30 mA		100 mA or less	100 mA or less	100 mA or less
Indicator	LED (Lit when ON)	Red/green LED (Lit when ON)	LED (Lit when ON)	Yellow LED (Lit when ON)	Red/green LED (Lit when ON)
Leakage current	1 mA or less		10 μA or less	0.05mA or less	10 μA or less
Weight g	1 m:22 3 m:57 5 m:93				

Item	2-wire reed			
	M0V, M0H		M5V, M5H	
Applications	Programmable controller, relay		For programmable controller, relay, IC circuit (without indicator lamp), serial connection	
Power supply voltage	-		-	
Load voltage	12/24 VDC	110 VAC	5/12/24 VDC	110 VAC or less
Load current	5 to 50 mA	7 to 20 mA	50 mA or less	20 mA or less
Indicator	LED (Lit when ON)		No indicator lamp	
Leakage current	0 mA			
Weight g	1 m:22 3 m:57 5 m:93			

*1: Refer to Ending Page 1 for detailed switch specifications and dimensions.

Switch specifications (T-switch)

● 2-color LED

Item	2-wire proximity		3-wire proximity	
	T2YH/T2YV	T2WH/T2WV	T3YH/T3YV	T3WH/T3WV
Applications	Dedicated for programmable controller		For programmable controller, relay	
Output method	-		NPN output	NPN output
Power supply voltage	-		10 to 28 VDC	
Load voltage	10 to 30 VDC	24 VDC ±10%	30 VDC or less	
Load current	5 to 20 mA (*1)		50 mA or less	
Indicator	Red/green LED (Lit when ON)	Red/green LED (Lit when ON)	Red/green LED (Lit when ON)	Red/green LED (Lit when ON)
Leakage current	1 mA or less		10 μA or less	
Weight g	1 m:33 3 m:87 5 m:142	1 m:18 3 m:49 5 m:80	1 m:33 3 m:87 5 m:142	1 m:18 3 m:49 5 m:80

● For AC magnetic field

Item	2-wire proximity
	T2YD,T2YDT (*4)
Applications	Dedicated for programmable controller
Indicator	Red/green LED (Lit when ON)
Load voltage	24 VDC ±10%
Load current	5 to 20 mA
Internal voltage drop	6V or less
Leakage current	1.0 mA or less
Weight g	1 m:61 3 m:166 5 m:272

*1: Refer to Ending Page 1 for detailed switch specifications and dimensions.
*2: Switches other than the above models, such as switches with connectors, are also available. Refer to Ending Page 1.
*3: The max. load current is 20 mA at 25°C. The current is lower than 20 mA if the operating ambient temperature around the switch is higher than 25°C. (5 to 10 mA at 60°C)
*4: AC magnetic field proof switch (T2YD/T2YDT) cannot be used in DC magnetic field.

Cylinder weight

Unit: kg

Bore size (mm)	Weight for 0 mm stroke				Mounting bracket weight		Additional weight per St = 100 mm
	Basic (00)	Foot (LB)	Foot (LB1)	Switch weight	T type	M type	
ø12 or equiv.	0.38	0.39	0.40	Refer to the weight in the switch specifications.	0.005	0.001	0.10
ø16 or equiv.	0.47	0.48	0.50				0.13
ø20 or equiv.	0.74	0.76	0.80				0.18
ø25 or equiv.	1.5	1.6	1.6				0.28
ø32 or equiv.	2.4	2.5	2.6				0.36
ø40 or equiv.	3.6	3.7	-				0.53
ø50 or equiv.	6.0	6.1	-				0.75
ø63 or equiv.	8.8	9.1	-				1.11
ø80 or equiv.	22.4	23.0	-				2.32
ø100 or equiv.	30.5	31.5	-				3.38

SCP*3
CMK2
CMA2
SCM
SCG
SCA2
SCS2
CKV2
CAV2/COVP/N2
SSD2
SSG
SSD
CAT
MDC2
MVC
SMG
MSD/MSDG
FC*
STK
SRL3
SRG3
SRM3
SRT3
MRL2
MRG2
SM-25
ShkAbs
FJ
FK
Spd Contr
Ending

How to order

No switch (built-in magnet for switch)

SRL3-GQ - 00 - 12 ◯ B - 200 ——— B

With switch (built-in magnet for switch)

SRL3-GQ - 00 - 12 ◯ B - 200 - M0H - R - B

- Ⓐ Mounting *1, *2
- Ⓑ Bore size
- Ⓒ Port thread
- Ⓓ Cushion
- Ⓔ Stroke
- Ⓕ Switch model No. *4
- Ⓖ Switch quantity
- Ⓗ Option *5, *6 *7, *8 *9

Code	Description
Ⓐ Mounting	
00	Basic
LB	Axial foot
LB1	Axial foot (ø12 to ø32 only)
Ⓑ Bore size (mm)	
12	ø12
16	ø16
20	ø20
25	ø25
32	ø32
40	ø40
50	ø50
63	ø63
80	ø80
100	ø100
Ⓒ Port thread	
Blank	Rc thread (M5 for ø12 and ø16)
N	NPT thread (ø20 or more) (made-to-order product)
G	G thread (ø20 or more) (made-to-order product)
Ⓓ Cushion	
B	Both sides cushioned
R	R side cushioned
L	L side cushioned
N	Without cushion

Ⓔ Stroke (mm)

Bore size	Stroke *3	Custom stroke
ø12 to ø100	**5 to 5000**	**In 1 mm increments**

Ⓕ Switch model No.

Axial lead wire	Radial lead wire	Contact	Voltage AC	Voltage DC	Indicator	Lead wire
M0H*	**M0V***	Reed	●	●	1-color LED	2-wire
M5H*	**M5V***	Reed	●	●	No indicator lamp	2-wire
M2H*	**M2V***	Proximity		●	1-color LED	
-	**M2WV***	Proximity		●	2-color LED	2-wire
M3H*	**M3V***	Proximity		●	1-color LED	
-	**M3WV***	Proximity		●	2-color LED	3-wire
M3PH*	**M3PV***	Proximity		●	1-color LED (custom)	3-wire
T2WH*	**T2WV***	Proximity		●	2-color LED	2-wire
T2YH*	**T2YV***	Proximity		●	2-color LED	2-wire
T3WH*	**T3WV***	Proximity		●	2-color LED	3-wire
T3YH*	**T3YV***	Proximity		●	2-color LED	3-wire
T2YD*	**-**	Proximity		●	2-color LED AC magnetic field	2-wire
T2YDT*	**-**	Proximity		●	2-color LED AC magnetic field	2-wire

*** Lead wire length**

Blank	1 m (standard)
3	3 m (option)
5	5 m (option)

Ⓖ Switch quantity

R	1 on R side
L	1 on L side
D	2
T	3
4	4 (when there are more than 4 switches, indicate switch quantity.)

Ⓗ Option

	Bore size (ø)	12	16	20	25	32	40	50	63	80	100
A	Both-sides full stroke adjustable, shock absorber	●	●	●	●	●	●	●	●	●	●
A1	R side full stroke adjustable, shock absorber	●	●	●	●	●	●	●	●	●	●
A2	L side full stroke, adjustable, shock absorber	●	●	●	●	●	●	●	●	●	●
A3	Full stroke adjustable, adjusting bracket to be added	●	●	●	●						
L*	Intermediate support bracket (for 00, LB)	●	●	●	●	●	●	●	●	●	●
N*	Intermediate support bracket (for LB1)	●	●	●	●	●					
H	Larger thread for table installation	●	●	●							
U	Height adjustment plate	●	●	●	●	●	●	●	●	●	●
Blank	Port position: F (Standard) / Cushion needle position: F (Standard)	●	●	●	●	●	●	●	●	●	●
R	Port position: R (Common port) / Cushion needle position: F	●	●	●	●	●	●	●	●	●	●
B	Port position: F / Cushion needle position: B	●	●	●	●	●	●	●	●	●	●
T	Port position: R (Common port) / Cushion needle position: B	●	●	●	●	●	●	●	●	●	●
D	Port position: D / Cushion needle position: F				●	●	●	●	●	●	●
S	Port position: D / Cushion needle position: D					●	●	●	●	●	●
X	Port position: F (Common port) / Cushion needle position: F									●	●

⚠ Precautions for model No. selection

*1 : Mounting bracket will be shipped assembled with the product.

*2 : For 12, 16, 20, 25 and 32 bore sizes with option code "R" or "T", the mounting will be "00" or "LB1".
(Piping with "LB" is not possible for option codes "R" and "T".)

*3 : Refer to page 1614 for the min. stroke with switch.

*4 : Switches other than Ⓕ Switch model No. are also available. (Made to order) Refer to Ending Page 1 for details.

*5 : The full stroke adjusting bracket on R side is provided as standard for the position locking. Therefore, if "A1" is selected, a shock absorber only is added to R side. In the case of "A", R side is position locking and full stroke adjustable with shock absorber, and L side is full stroke adjustable with shock absorber. (Figure below)

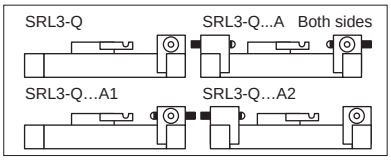

6 : "" of L* and N* indicates the number of sets. When more than one set are necessary, specify "L2" (for LB) or "N2" (for LB1). 2 pcs./set

*7 : For the port and cushion needle position codes, refer to dimensions on pages 1598 to 1603.

*8 : In the case of the standard with ø12 to ø25, remove the cover, attach a flat nut and install the full stroke adjusting bracket. A flat nut is attached to option "A3" to enable retrofitting the full stroke adjusting bracket without removing the cover.

*9 : In "H", the thread size for ø12 and ø16 will be "M4" and that for ø20 will be "M5".

*10 : Check the option combinations in "Option selection table" on the next page.

*11 : Copper and PTFE free as standard. (except for type with shock absorber)

[Example of model No.]

SRL3-GQ-00-12B-200-M0H-R-B

Model: Rodless cylinder Resin guide/position locking

- Ⓐ Mounting : Basic
- Ⓑ Bore size : ø12 mm
- Ⓒ Port thread : M5
- Ⓓ Cushion : Both sides cushioned
- Ⓔ Stroke : 200 mm
- Ⓕ Switch model No. : Reed M0H switch, lead wire 1 m
- Ⓖ Switch quantity : 1 on R side
- Ⓗ Option : Port position F, cushion needle position B

Option selection table

●: Available ▒: Not available

	Code	A	A1	A2	A3	L*	N*	H	U	Blank	R	B	T	D	S	X
		Both side full stroke adjustable, with shock absorber	R side full stroke adjustable, with shock absorber	L side full stroke adjustable, with shock absorber	Full stroke adjustable with adjusting bracket to be added later	Intermediate support bracket (for 00, LB)	Intermediate support bracket (for LB1)	Larger thread for table installation	Height adjustment plate	Port position F, cushion needle position F (standard)	Port position R, cushion needle position F (common port)	Port position F, cushion needle position B	Port position R, cushion needle position B (common port)	Port position D, cushion needle position F	Port position D, cushion needle position D	Port position F, cushion needle position F (common port)
Option	A					●	●	●	●	●	●	●	●	●	●	●
	A1					●	●	●	●	●	●	●	●	●	●	●
	A2					●	●	●	●	●	●	●	●	●	●	●
	A3					●	●	●	●	●	●	●	●	●	●	
	L*							●	●	●	●	●	●	●	●	●
	N*							●	●	●	●	●	●	●	●	
	H									●	●	●	●	●	●	
	U									●	●	●	●	●	●	●
	Blank															
	R															
	B															
	T															
	D															
	S															
	X															

*1: Some combinations are not available depending on the bore size. Be sure to check the Ⓗ Option in "How to order" on the previous page.
*2: LB1 with port position D is not possible. (ø25, ø32)

Theoretical thrust table

(Unit: N)

Bore size (mm)	Operating direction	Working pressure MPa								
		0.1	0.15	0.2	0.25	0.3	0.4	0.5	0.6	0.7
ø12	Push/Pull	–	–	–	34.6	41.5	55.3	69.1	83.0	96.8
ø16	Push/Pull	–	–	–	54.0	64.8	86.4	1.08×10^2	1.30×10^2	1.51×10^2
ø20	Push/Pull	–	–	–	78.6	94.4	1.26×10^2	1.57×10^2	1.89×10^2	2.20×10^2
ø25	Push/Pull	–	81.4	1.08×10^2	1.35×10^2	1.63×10^2	2.17×10^2	2.71×10^2	3.25×10^2	3.80×10^2
ø32	Push/Pull	–	1.22×10^2	1.63×10^2	2.04×10^2	2.44×10^2	3.26×10^2	4.07×10^2	4.88×10^2	5.70×10^2
ø40	Push/Pull	–	1.90×10^2	2.53×10^2	3.16×10^2	3.80×10^2	5.06×10^2	6.33×10^2	7.60×10^2	8.86×10^2
ø50	Push/Pull	–	2.98×10^2	3.98×10^2	4.94×10^2	5.96×10^2	7.95×10^2	9.94×10^2	1.19×10^3	1.39×10^3
ø63	Push/Pull	3.14×10^2	4.70×10^2	6.27×10^2	7.84×10^2	9.41×10^2	1.25×10^3	1.57×10^3	1.88×10^3	2.20×10^3
ø80	Push/Pull	5.06×10^2	7.60×10^2	1.01×10^3	1.26×10^3	1.52×10^3	2.03×10^3	2.53×10^3	3.04×10^3	3.54×10^3
ø100	Push/Pull	7.91×10^2	1.19×10^3	1.58×10^3	1.98×10^3	2.37×10^3	3.16×10^3	3.95×10^3	4.74×10^3	5.53×10^3

How to order switch (For configurations, refer to pages 1624 to 1626)

● Switch body + mounting bracket set (*1)

SRL3 - M0H*

Switch model No.
(Item Ⓕ on page 1616)

● Switch body only

SW - M0H*

Switch model No.
(Item Ⓕ on page 1616)

* Lead wire length	
Blank	1 m (standard)
3	3 m (option)
5	5 m (option)

* indicates lead wire length.

● Mounting bracket set (*2)

· M-switch

SRL3 - M

· T-switch

SRL3 - T

Note: The mounting bracket is different between the M-switch and T-switch.

● Lead wire holder (*3)

SRL3 - MH

*1: "Switch body + mounting bracket set" does not include lead wire holders. Order lead wire holders separately if necessary.
*2: The mounting bracket is different between the M-switch and T-switch.
*3: The quantity of lead wire holders per set is 10.

● How to order discrete shock absorber

SRL3 - 40 - NCK

Bore size
(Item Ⓑ on page 1616)

(One shock absorber, one shock absorber fixing hexagon nut)

(Note) The shock absorber fixing hexagon nut for SRL3-40 is a made-to-order product.

Applicable shock absorber model No.

Model	Shock absorber model No.
SRL3-12	NCK-00-0.3-C
SRL3-16	NCK-00-0.3-C
SRL3-20	NCK-00-0.7-C
SRL3-25	NCK-00-1.2
SRL3-32	NCK-00-2.6
SRL3-40	NCK-00-7
SRL3-50	NCK-00-12
SRL3-63	NCK-00-12
SRL3-80	NCK-00-20
SRL3-100	NCK-00-20

● How to order discrete intermediate support bracket

For 00/LB

SRL3 - 40 - L (2/set)

Bore size
(Item Ⓑ on page 1616)

For LB1

SRL3 - 32 - N (2/set)

Bore size
(Item Ⓑ on page 1616)

● How to order full stroke adjusting bracket kit

SRL3 - 40 - A1 (1 set)

Bore size
(Item Ⓑ on page 1616)

(For configurations, refer to "Full stroke adjusting bracket kit" on page 1625.)

● How to order repair parts

SRL3-GQ - 40 K - 200

Bore size (Item Ⓑ on page 1616) Stroke (Item Ⓔ on page 1616)

● How to order mounting bracket

SRL3 - LB - 40

Mounting (Item Ⓐ on page 1616) Bore size (Item Ⓑ on page 1616)

(Bracket x2, mounting bolt x4)

● How to order height adjustment plate set

SRL3 - 40 - U

Bore size
(Item Ⓑ on page 1616)

(Plate, mounting bolt x4)

Internal structure and parts list

For the internal structure and parts list, refer to:
SRL3 Series Pages 1579 to 1581
SRL3-G Series Pages 1595 to 1597
SRL3-Q Series Pages 1609 to 1611.

Repair parts list

Bore size (mm)	Kit No.	Repair parts No.		
ø12 or equiv.	SRL3-GQ-12K-*	❽ ❾ ⑱ ㉑ ㉒ ㉖ ㉗ (The same as part numbers on page 1579.)	❹ ❻ ❿ (The same as part numbers on page 1609.)	❶ ❺ (The same as part numbers on page 1595.)
ø16 or equiv.	SRL3-GQ-16K-*			
ø20 or equiv.	SRL3-GQ-20K-*			
ø25 or equiv.	SRL3-GQ-25K-*			
ø32 or equiv.	SRL3-GQ-32K-*	❽ ❾ ⑱ ㉑ ㉒ ㉖ ㉗ (The same as part numbers on page 1579.)	❸ ❹ ❻ ❿ (The same as part numbers on page 1610.)	❶ ❺ (The same as part numbers on page 1595.)
ø40 or equiv.	SRL3-GQ-40K-*			
ø50 or equiv.	SRL3-GQ-50K-*	❽ ❾ ⑱ ㉑ ㉒ ㉖ ㉗ ㉜ (The same as part numbers on page 1580.)	❸ ❹ ❻ ❿ (The same as part numbers on page 1610)	❶ ❺ (The same as part numbers on page 1596.)
ø63 or equiv.	SRL3-GQ-63K-*			
ø80 or equiv.	SRL3-GQ-80K-*	❽ ❾ ⑱ ㉑ ㉒ ㉖ ㉗ ㉘ ㉙ ㉜ ㉝ (The same as part numbers on page 1581.)	❸ ❹ ❻ ❿ (The same as part numbers on page 1611.)	❶ (The same as part numbers on page 1597.)
ø100 or equiv.	SRL3-GQ-100K-*			

Dimensions

SRL3 Series Pages 1582 to 1587
SRL3-G Series Pages 1598 to 1603
SRL3-Q Series Pages 1612 and 1613.

SRL3-Q Series common dimensions

● Full stroke adjustable with shock absorber

Note: In the case of option A or A1, adjust the stroke on the position locking side by adjusting the stroke of the entire unit. Do not perform fine adjustment using the shock absorber and hexagon socket set screw.
Fine adjustment with the shock absorber and hexagon socket set screw will cause the lock lever and the position locking mechanism to be misaligned, which prevents secure locking.

·ø12 to ø25 or equiv.

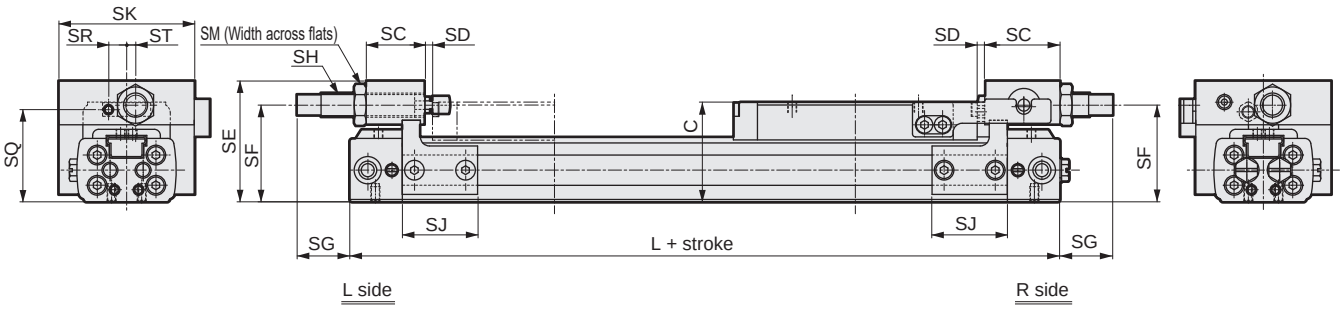

Code / Bore size (mm)	SC	SD	SE	SF	SG At max.	SG At min.	SG Adj range	SH Thread size	SH Max. absorbed energy (J)	SJ	SK	SM	SN	SP	SQ	SR	ST	C	L
ø12 or equiv.	19.5	2.5	40	32	17.5	7.5	10	M8x0.75	3	25	45	12	5.5	M3	30.5	6	3	33	136
ø16 or equiv.	18	4	42	35	14.5	4.5	10	M8x0.75	3	25	49	12	5.5	M3	34	6	4	37	149
ø20 or equiv.	22.5	3.5	48	40	14.5	4.5	10	M10x1.0	7	39	57	14	7	M4	38	8	5	42	169
ø25 or equiv.	20	2.5	62.5	51.5	14.5	4.5	10	M12x1.0	12	50	77	17	10	M6	50	12	10	53	190

·ø32 to ø63 or equiv.

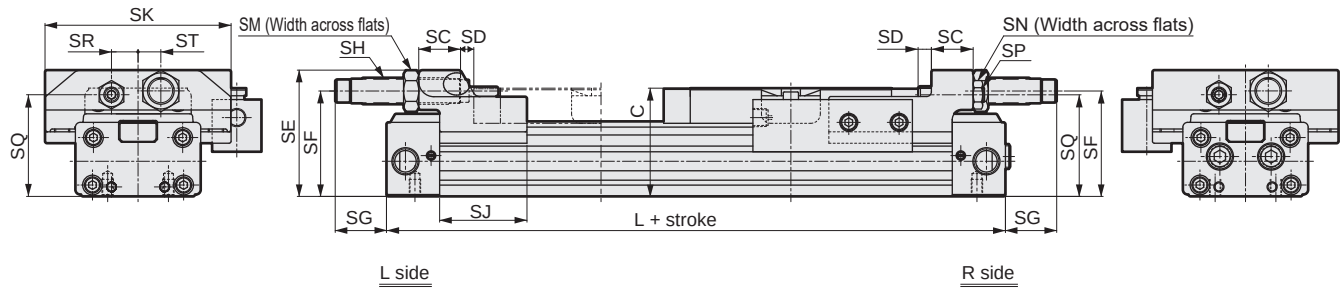

Code / Bore size (mm)	SC	SD	SE	SF	SG At max.	SG At min.	SG Adj range	SH Thread size	SH Max. absorbed energy (J)	SJ	SK	SM	SN	SP	SQ	SR	ST	C	L
ø32 or equiv.	22	7	66.5	55.5	27	17	10	M14x1.5	26	46	98	19	13	M8	53.5	14	12	57	226
ø40 or equiv.	32	7	78.5	65.5	34	24	10	M20x1.5	70	51	112	24	17	M10	63.5	17	12	67	244
ø50 or equiv.	38	8	99	80	55	45	10	M25x1.5	120	53	136	32	19	M12	77.5	22	17	82	258
ø63 or equiv.	38	8	112	93.5	44	34	10	M25x1.5	120	64	158	32	24	M16	89	25	20	95	296

SRL3-Q Series common dimensions

● Full stroke adjustable with shock absorber

Note: In the case of option A or A1, adjust the stroke on the position locking side by adjusting the stroke of the entire unit. Do not perform fine adjustment using the shock absorber and hexagon socket set screw.
Fine adjustment with the shock absorber and hexagon socket set screw will cause the lock lever and the position locking mechanism to be misaligned, which prevents secure locking.

·ø80 to ø100 or equiv.

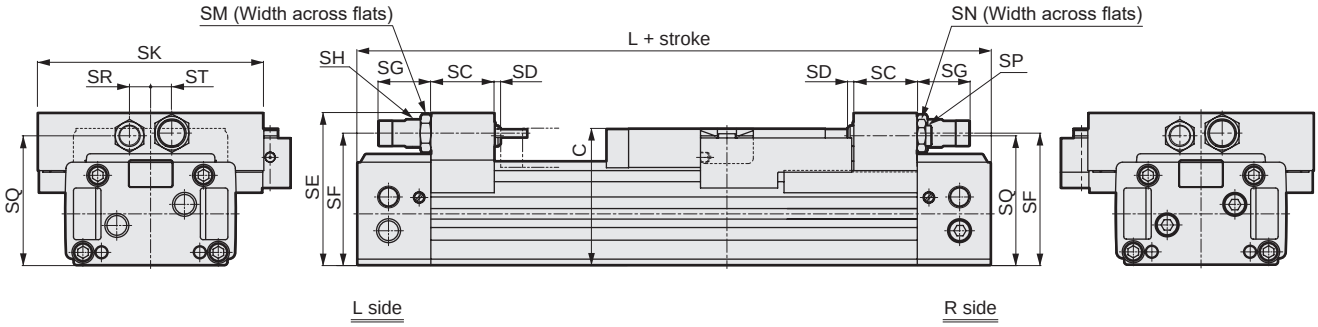

Code / Bore size (mm)	SC	SD	SE	SF	SG At max.	SG At min.	SG Adj range	SH Thread size	SH Max. absorbed energy (J)	SK	SM	SN	SP	SQ	SR	ST	C	L
ø80 or equiv.	60	6	145	125.5	50	40	10	M27x1.5	200	214	32	27	M20	123	20	20	130	500
ø100 or equiv.	60	6	164	144.5	50	40	10	M27x1.5	200	250	32	27	M20	142	20	20	150	530

SCP*3
CMK2
CMA2
SCM
SCG
SCA2
SCS2
CKV2
CAV2/ COVP/N2
SSD2
SSG
SSD
CAT
MDC2
MVC
SMG
MSD/ MSDG
FC*
STK
SRL3
SRG3
SRM3
SRT3
MRL2
MRG2
SM-25
ShkAbs
FJ
FK
Spd Contr
Ending

SRL3 Series common option dimensions

● Floating fitting (Y)

Material: Steel
Zinc chromate treatment

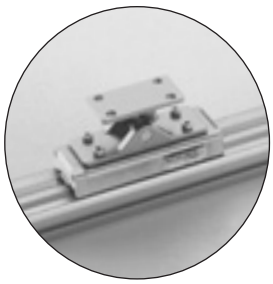

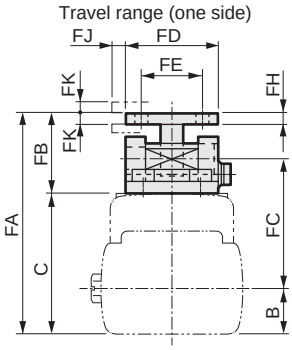

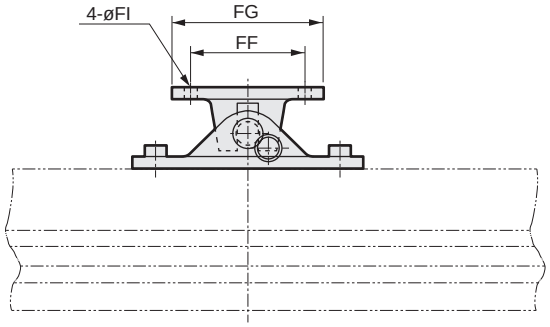

Code / Bore size (mm)	FA	FB	FC	FD	FE	FF	FG	FH	FI	FJ	FK	B	C
ø12 or equiv.	54	21	31.5	24	16	30	40	3	3.4	3	3	10.5	33
ø16 or equiv.	58	21	34	24	16	30	40	3	3.4	3	3	12	37
ø20 or equiv.	67	25	39	30	20	40	56	4	4.5	3	3	14	42
ø25 or equiv.	78	25	47	30	20	40	56	4	6	3	3	17	53
ø32 or equiv.	95	38	55.5	45	30	50	70	6	7	5	5	18.5	57

Code / Bore size (mm)	FA	FB	FC	FD	FE	FF	FG	FH	FI	FJ	FK	B	C
ø40 or equiv.	105	38	62	45	30	50	70	6	7	5	5	22	67
ø50 or equiv.	126	44	73	60	40	70	90	8	9	5	5	28	82
ø63 or equiv.	139	44	79	60	40	70	90	8	9	5	5	35	95
ø80 or equiv.	188	58	107	80	50	90	120	11	14	10	5	49	130
ø100 or equiv.	220	70	120.5	90	60	110	140	13	14	10	5	61.5	150

● Thin floating fitting (Y1) ø12 to ø63

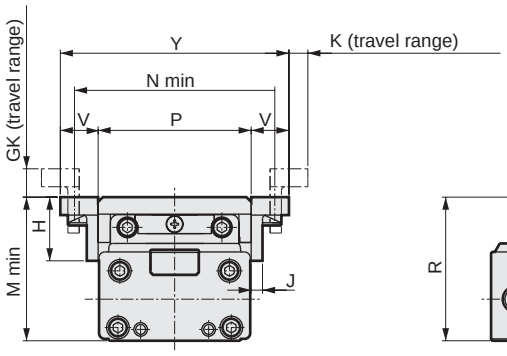

[Hooks facing outside]

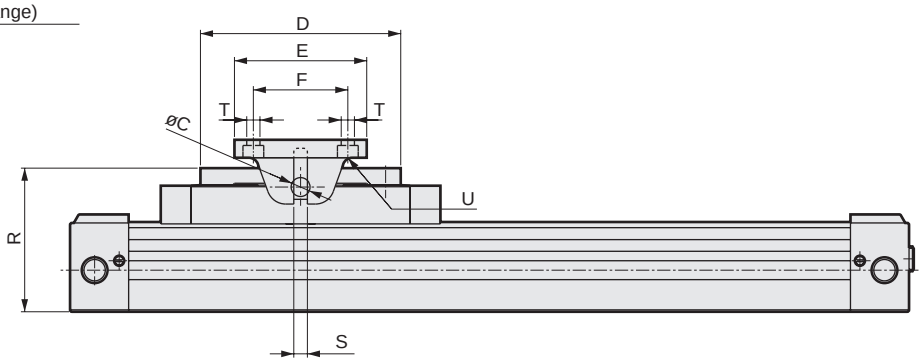

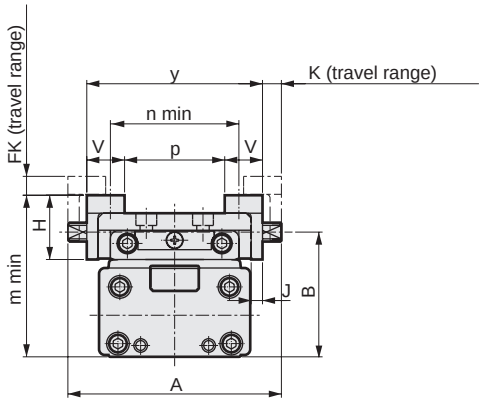

[Hooks facing inside]

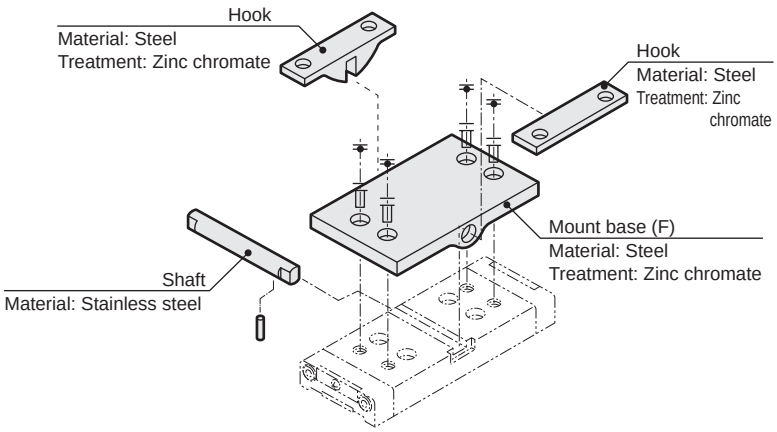

Code / Bore size	A	B	C	D	E	F	H	J	K	FK	GK	M min	m min	N min	n min	P	p	R	S	V	Y	y	T	U
ø12	52	32	5	60	40	30	20	3	6	6	9	38	43	47.5	26.5	34	16	38	3.5	12	58	40	ø3.4	ø6.5 spot face depth 3.3
ø16	56	36.5	5	60	40	30	20	3	6	6	9	42	47	51.5	30.5	38	20	42	3.5	12	62	44	ø3.4	ø6.5 spot face depth 3.3
ø20	64	41	6	84	56	40	24.5	4	6	6	9	48.5	56.5	62	34	44	22	48.5	4	15	74	52	ø4.5	ø8 spot face depth 4.4
ø25	74	53	6	84	56	40	24.5	4	6	6	9	60.5	68.5	72	44	54	32	60.5	4	15	84	62	ø5.5	ø9.5 spot face depth 5.4
ø32	99	56.5	8	106	70	50	34	6	10	10	15	66	75.5	92	54	67	39	66	5.5	20	107	79	ø6.6	ø11 spot face depth 6.5
ø40	113	66	10	116	70	50	34	6	10	10	15	76	85.5	106	68	81	53	76	7	20	121	93	ø6.6	ø11 spot face depth 6.5
ø50	133	81	12	120	90	70	43	8	10	10	15	93	106	129	81	97	63	93	8.5	25	147	113	ø9	ø14 spot face depth 8.6
ø63	155	94	14	136	90	70	43	8	10	10	15	108	120	151	103	119	85	107	10	25	169	135	ø9	ø14 spot face depth 8.6

SRL3 Series common option dimensions

CAD

● Intermediate support bracket (L*N*)
(auxiliary bracket for preventing sag)

Material: Aluminum alloy
Alumite treatment

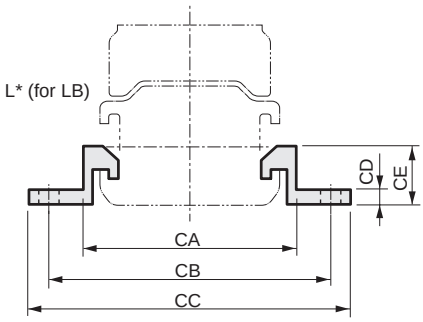

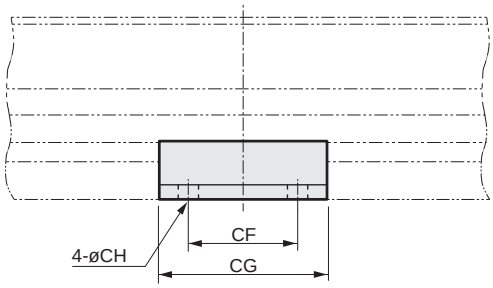

Code / Bore size (mm)	CA	CB	CC	CD	CE	CF	CG	CH	CJ
ø12 or equiv.	38	52	60	3	11	16	30	4	6
ø16 or equiv.	42	56	64	3	12	20	35	4	6
ø20 or equiv.	49	64	75	4	14	20	38	5	8
ø25 or equiv.	60	76	88	6	19.5	20	40	7	10
ø32 or equiv.	74	88	100	6	21.5	20	40	7	10
ø40 or equiv.	90	108	124	6	24.5	30	60	9	-
ø50 or equiv.	106	124	140	8	30.5	30	60	9	-
ø63 or equiv.	130	152	172	10	38.5	50	90	11	-
ø80 or equiv.	172	210	236	12	32	60	110	14	-
ø100 or equiv.	208	246	272	12	32	60	110	14	-

L* (for 00/LB)N* (for LB1)

N* (for LB1)

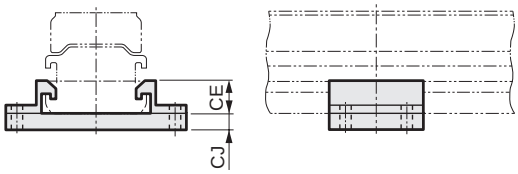

● Height adjustment plate (U)

Material: Aluminum alloy
Alumite treatment

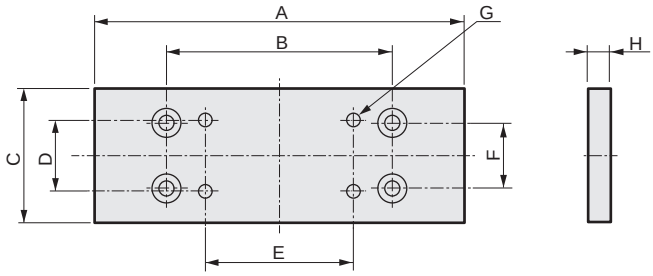

Code / Bore size	A	B	C	D	E	F	G	H
ø 12	80	42	29	16	30	13	4-M3 through	8
ø 16	87	48	32	16	30	15	4-M3 through	6
ø 20	99	60	38	20	40	18	4-M4 through	7
ø 25	121	70	48	20	40	20	4-M5 through	10.5
ø 32	134	80	56	30	50	20	4-M6 through	10.5
ø 40	147	90	68	30	50	30	4-M6 through	12.5
ø 50	151	100	80	40	70	30	4-M8 through	18
ø 63	167	110	102	40	70	40	4-M8 through	18
ø 80	227	150	146	50	90	50	4-M12 through	18
ø100	237	160	170	60	110	60	4-M12 through	18

Configurations table

Switch

● Switch body + mounting bracket set (*1)

SRL3 - M0H*

Switch model No.
(Item Ⓕ on page 1576)

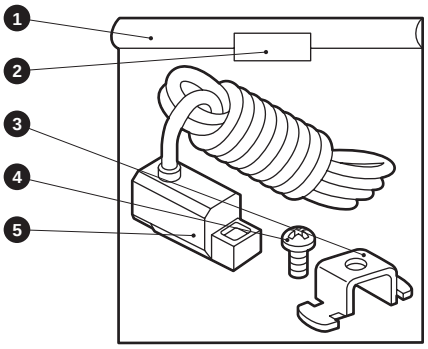

No.	Part name	Qty.
1	Plastic bag	1
2	Label	1
3	Switch mounting bracket	1
4	Cross-recessed pan head machine screw	1
5	Switch	1

● Switch body only

SW - M0H*

Switch model No.
(Item Ⓕ on page 1576)

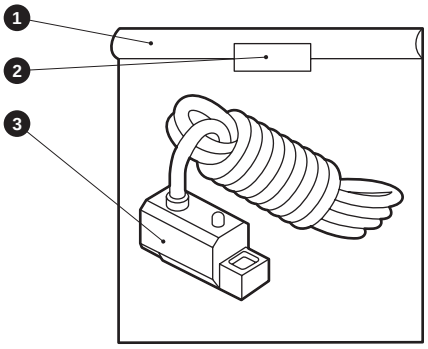

No.	Part name	Qty.
1	Plastic bag	1
2	Label	1
3	Switch	1

Switch

● Mounting bracket only

SRL3 - M

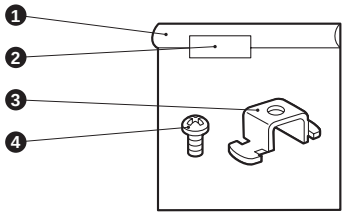

● Mounting bracket only

SRL3 - T

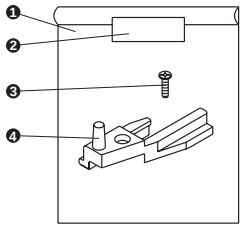

No.	Part name	Qty.
1	Plastic bag	1
2	Label	1
3	Switch mounting bracket	1
4	Cross-recessed pan head machine screw	1

● Lead wire holder

SRL3 - MH

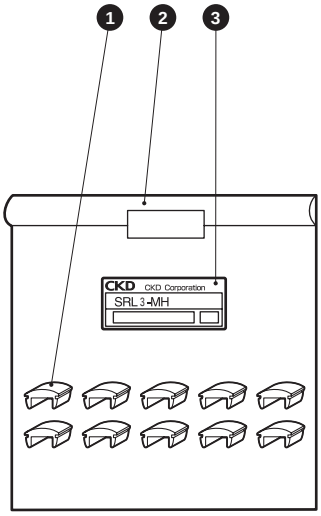

No.	Part name	Qty.
1	Lead wire holder	10
2	Plastic bag	1
3	Package label (S)	1

Note: Packing details may differ depending on the product size.

Repair parts

SRL3 - 40 K - 200

Bore size (Item Ⓑ on page 1576)
Stroke (Item Ⓔ on page 1576)

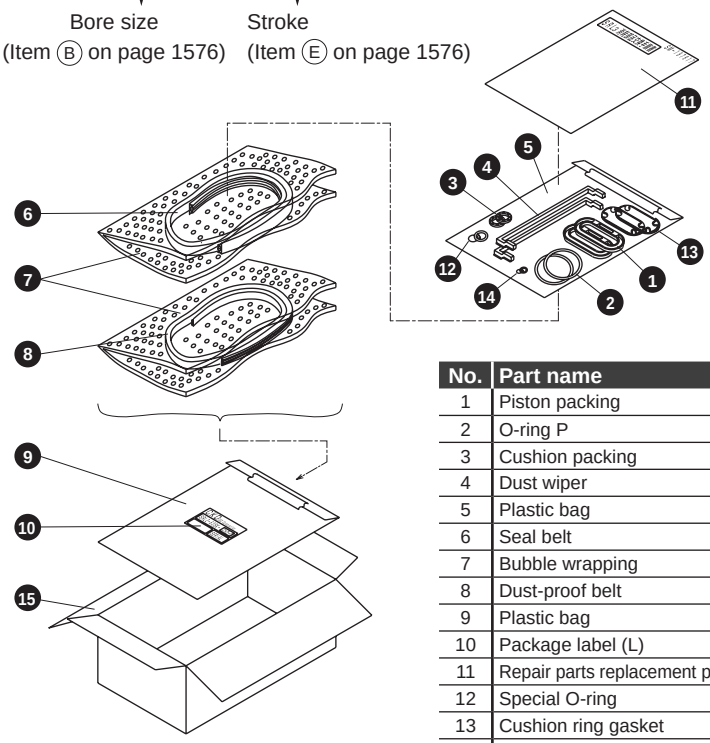

No.	Part name	Qty.
1	Piston packing	2
2	O-ring P	2
3	Cushion packing	2
4	Dust wiper	2
5	Plastic bag	1
6	Seal belt	1
7	Bubble wrapping	1
8	Dust-proof belt	1
9	Plastic bag	1
10	Package label (L)	1
11	Repair parts replacement procedures	1
12	Special O-ring	2
13	Cushion ring gasket	2
14	Needle gasket	2
15	Carton	1

*1: Cushion ring gaskets are not included in ø12 to ø40.
*2: Four gaskets are added with ø80 to ø100.

Mounting bracket

SRL3 - LB - 40

Mounting (Item Ⓐ on page 1576)
Bore size (Item Ⓑ on page 1576)

Bracket x 2 + mounting bolt x 4

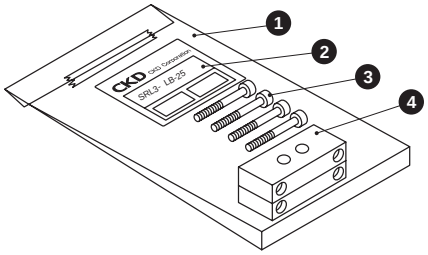

No.	Part name	Qty.
1	Plastic bag	1
2	Package label (S)	1
3	Hexagon socket head cap screw	4
4	Foot bracket (A)	2

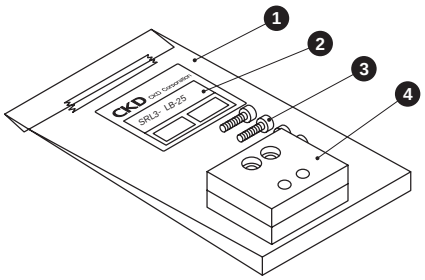

No.	Part name	Qty.
1	Plastic bag	1
2	Package label (S)	1
3	Hexagon socket head cap screw	4
4	Foot bracket (B)	2

Full stroke adjusting bracket kit

SRL3 - 40 - A1 1 set

Bore size (Item Ⓑ on page 1576)

[ø12 to ø25]

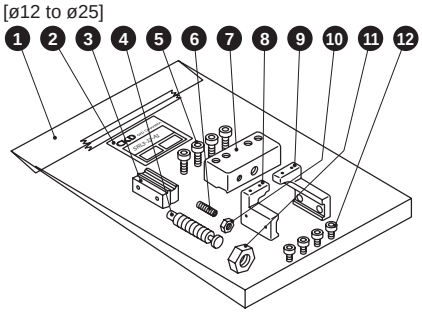

No.	Part name	Qty.
1	Plastic bag	1
2	Package label (S)	1
3	Flat nut	2
4	Shock absorber	1
5	Hexagon socket head cap screw	4
6	Hexagon socket set screw	1
7	Plate	1
8	Adaptor (R)	1
9	Adaptor (L)	1
10	Stopper bolt fixing nut	1
11	Shock absorber fixing nut	1
12	Hexagon socket head cap screw	4

[ø32 to ø63]

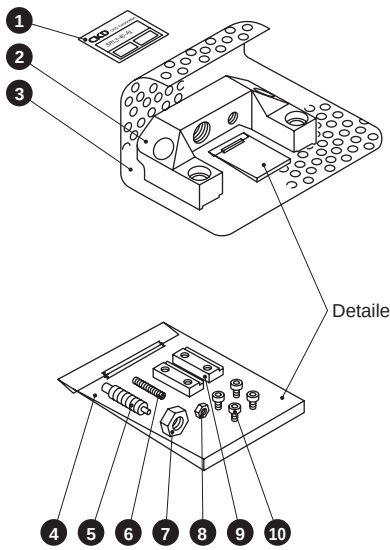

[ø80/ø100]

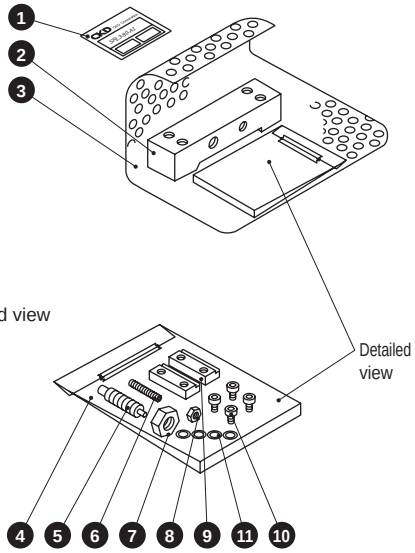

No.	Product name	Qty.	No.	Product name	Qty.
1	Package label (S)	1	7	Hexagon nut	1
2	Adaptor	1	8	Hexagon nut	1
3	Bubble wrapping		9	Adaptor nut	2
4	Plastic bag	1	10	Hexagon socket head cap screw	4
5	Shock absorber	1	11	Disc spring	4
6	Hexagon socket set screw	1			

Note: Packing details may differ depending on the product size.

SCP*3
CMK2
CMA2
SCM
SCG
SCA2
SCS2
CKV2
CAV2/COVP/N2
SSD2
SSG
SSD
CAT
MDC2
MVC
SMG
MSD/MSDG
FC*
STK
SRL3
SRG3
SRM3
SRT3
MRL2
MRG2
SM-25
ShkAbs
FJ
FK
Spd Contr
Ending

Floating fitting set

SRL3 - 40 - Y

Bore size
(Item Ⓑ on page 1576)

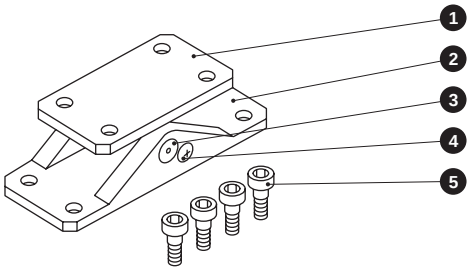

No.	Part name	Qty.
1	Mount	1
2	Mount base	1
3	Pin	1
4	Pan head machine screw with spring washer	1
5	Mounting bolt	4

Note: Packing details may differ depending on the product size.

Intermediate support bracket

● For 00/LB

SRL3 - 40 - L 2 pcs./set

Bore size
(Item Ⓑ on page 1576)

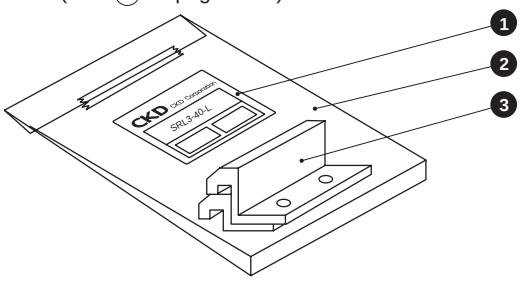

No.	Part name	Qty.
1	Package label (S)	1
2	Plastic bag	1
3	Intermediate support bracket	2

● For LB1

SRL3 - 32 - N 2 pcs./set

Bore size
(Item Ⓑ on page 1576)

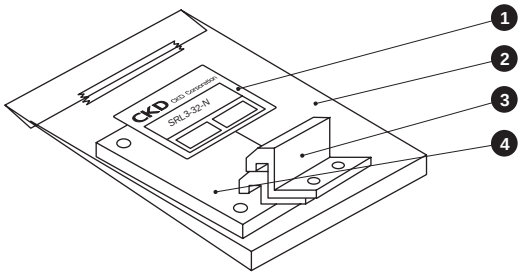

No.	Part name	Qty.
1	Package label (S)	1
2	Plastic bag	1
3	Intermediate support bracket	2
4	Plate	1

Kit weight list

Floating fitting

Kit No.	Weight (g)
SRL3-12-Y	86
SRL3-16-Y	86
SRL3-20-Y	189
SRL3-25-Y	188
SRL3-32-Y	572
SRL3-40-Y	571
SRL3-50-Y	1194
SRL3-63-Y	1188
SRL3-80-Y	2638
SRL3-100-Y	4115

Thin floating fitting

Kit No.	Weight (g)
SRL3-12-Y1	139
SRL3-16-Y1	157
SRL3-20-Y1	291
SRL3-25-Y1	403
SRL3-32-Y1	732
SRL3-40-Y1	879
SRL3-50-Y1	1590
SRL3-63-Y1	2057

Intermediate support bracket

● For 00/LB

Kit No.	Weight (g)
SRL3-12-L	12
SRL3-16-L	14
SRL3-20-L	21
SRL3-25-L	35
SRL3-32-L	35
SRL3-40-L	70
SRL3-50-L	87
SRL3-63-L	199
SRL3-80-L	337
SRL3-100-L	337

● For LB1

Kit No.	Weight (g)
SRL3-12-N	40
SRL3-16-N	49
SRL3-20-N	81
SRL3-25-N	123
SRL3-32-N	136

Mounting bracket

● For LB

Kit No.	Weight (g)
SRL3-LB-12	13
SRL3-LB-16	15
SRL3-LB-20	28
SRL3-LB-25	88
SRL3-LB-32	103
SRL3-LB-40	152
SRL3-LB-50	272
SRL3-LB-63	448
SRL3-LB-80	610
SRL3-LB-100	1014

● For LB1

Kit No.	Weight (g)
SRL3-LB1-12	25
SRL3-LB1-16	27
SRL3-LB1-20	58
SRL3-LB1-25	123
SRL3-LB1-32	161

Discrete shock absorber

Kit No.	Weight (g)
SRL3-12-NCK	14
SRL3-16-NCK	14
SRL3-20-NCK	23
SRL3-25-NCK	45
SRL3-32-NCK	77
SRL3-40-NCK	212
SRL3-50-NCK	330
SRL3-63-NCK	330
SRL3-80-NCK	475
SRL3-100-NCK	475

Height adjustment plate

Kit No.	Weight (g)
SRL3-12-U	52
SRL3-16-U	47
SRL3-20-U	75
SRL3-25-U	173
SRL3-32-U	225
SRL3-40-U	352
SRL3-50-U	620
SRL3-63-U	873
SRL3-80-U	1396
SRL3-100-U	2070

Kit weight list

Switch related parts

● Mounting bracket only

Kit No.	Weight (g)
SRL3-M	1
SRL3-T	5

Note: In the case of the mounting bracket + switch, add the switch weight.

● Lead wire holder

Kit No.	Weight (g)
SRL3-MH	3

Repair parts

● SRL3 Series

Kit No.	Weight (g)
SRL3-12K-□	7 + 5 x stroke/100
SRL3-16K-□	8 + 5 x stroke/100
SRL3-20K-□	10 + 5 x stroke/100
SRL3-25K-□	24 + 10 x stroke/100
SRL3-32K-□	31 + 10 x stroke/100
SRL3-40K-□	54 + 18 x stroke/100
SRL3-50K-□	66 + 18 x stroke/100
SRL3-63K-□	91 + 18 x stroke/100
SRL3-80K-□	248 + 42 x stroke/100
SRL3-100K-□	268 + 42 x stroke/100

● SRL3-G Series

Kit No.	Weight (g)
SRL3-G-12K-□	7 + 5 x stroke/100
SRL3-G-16K-□	9 + 5 x stroke/100
SRL3-G-20K-□	11 + 5 x stroke/100
SRL3-G-25K-□	28 + 10 x stroke/100
SRL3-G-32K-□	36 + 10 x stroke/100
SRL3-G-40K-□	59 + 18 x stroke/100
SRL3-G-50K-□	78 + 18 x stroke/100
SRL3-G-63K-□	104 + 18 x stroke/100
SRL3-G-80K-□	296 + 42 x stroke/100
SRL3-G-100K-□	319 + 42 x stroke/100

● SRL3-Q Series

Kit No.	Weight (g)
SRL3-Q-12K-□	7 + 5 x stroke/100
SRL3-Q-16K-□	8 + 5 x stroke/100
SRL3-Q-20K-□	10 + 5 x stroke/100
SRL3-Q-25K-□	25 + 10 x stroke/100
SRL3-Q-32K-□	31 + 10 x stroke/100
SRL3-Q-40K-□	54 + 18 x stroke/100
SRL3-Q-50K-□	68 + 18 x stroke/100
SRL3-Q-63K-□	92 + 18 x stroke/100
SRL3-Q-80K-□	250 + 42 x stroke/100
SRL3-Q-100K-□	270 + 42 x stroke/100

● SRL3-GQ Series

Kit No.	Weight (g)
SRL3-GQ-12K-□	8 + 5 x stroke/100
SRL3-GQ-16K-□	9 + 5 x stroke/100
SRL3-GQ-20K-□	11 + 5 x stroke/100
SRL3-GQ-25K-□	29 + 10 x stroke/100
SRL3-GQ-32K-□	37 + 10 x stroke/100
SRL3-GQ-40K-□	60 + 18 x stroke/100
SRL3-GQ-50K-□	80 + 18 x stroke/100
SRL3-GQ-63K-□	105 + 18 x stroke/100
SRL3-GQ-80K-□	298 + 42 x stroke/100
SRL3-GQ-100K-□	322 + 42 x stroke/100

Full stroke adjusting kit

Kit No.	Weight (g)
SRL3-12-A1	110
SRL3-16-A1	114
SRL3-20-A1	187
SRL3-25-A1	375
SRL3-32-A1	644
SRL3-40-A1	1032
SRL3-50-A1	2128
SRL3-63-A1	2454
SRL3-80-A1	3108
SRL3-100-A1	3422

Rodless cylinder selection guide

[STEP1]

Moment actuates according to the cylinder mounting direction and the position of center of gravity of load.

● Types of moment caused by load

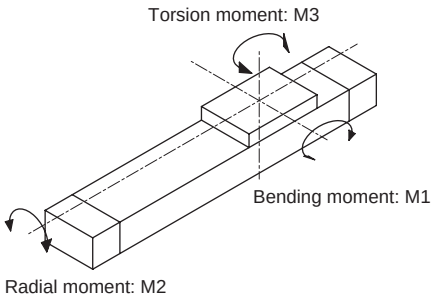

[Table 1] Value of a

Bore size	a(m)
	SRL3,SRL3-G,SRL3-Q,SRL3-GQ
ø12	0.023
ø16	0.025
ø20	0.028
ø25	0.036
ø32	0.039
ø40	0.045
ø50	0.054
ø63	0.060
ø80	0.081
ø100	0.089

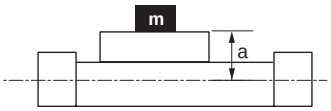

1 Obtain the static moment.

Unit: N·m

Mounting orientation		Horizontal upward	Horizontal downward	Horizontal lateral	Vertical
Vertical load W		mx9.8			-
Static moment	M1	$W \times \ell_1$	$W \times \ell_1$	-	$W \times (\ell_3 + a)$
	M2	$W \times \ell_2$	$W \times \ell_2$	$W \times (\ell_3 + a)$	-
	M3	-	-	$W \times \ell_1$	$W \times \ell_2$

m : Load weight [kg]
ℓ_1 : Length along the stroke direction from the center of table to the center of gravity of load [m]
ℓ_2 : Length in the width direction from the center of table to the center of gravity of load [m]
ℓ_3 : Length in the vertical direction from the center of table to the center of gravity of load [m]

Horizontal upward

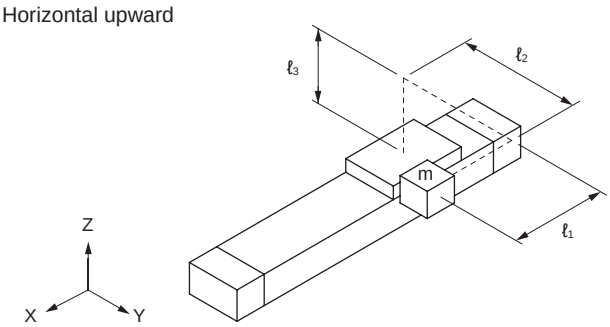

Horizontal downward

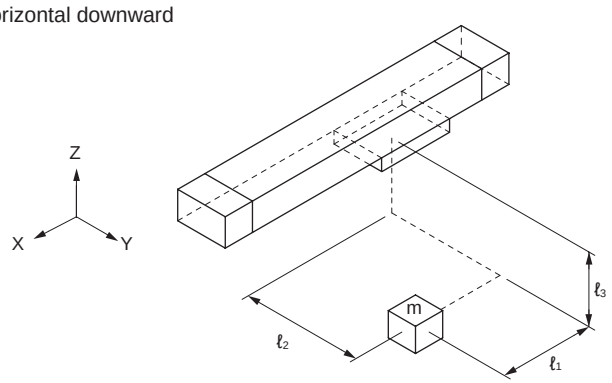

Horizontal lateral

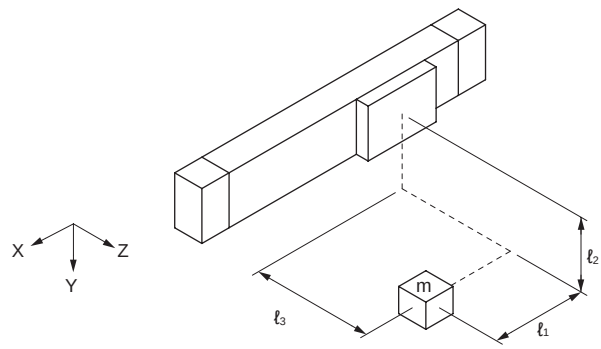

Vertical

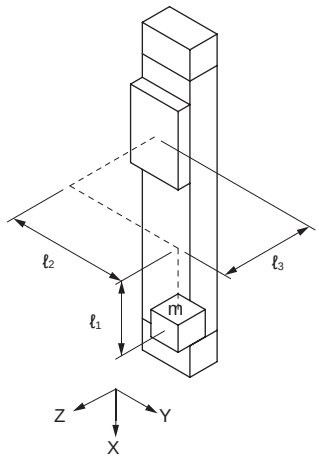

2 Obtain the dynamic moment caused by the load inertia at the stroke end.

Unit: N·m

Mounting orientation		Horizontal upward	Horizontal downward	Vertical	Horizontal lateral
Dynamic moment	M1i	$W \times (\ell_3 + a) \times G$			
	M2i	M2i dynamic moment is not generated.			
	M3i	$W \times \ell_2 \times G$			

Dynamic moment can be calculated with the formulas above regardless of the mounting direction.

Obtain an approximate G coefficient from Table 2.

[Table 2] $Va\ (\text{Average speed}) = \dfrac{\text{Travel distance}}{\text{Travel time}}\ (\text{m/s})$

Va (Average speed) (m/s)	Vm (stroke end speed) (m/s)	G Coefficient
0.3	to 0.65	9
0.6	to 1.00	15
0.9	to 1.30	23
1.2	to 2.00	40

G Coefficient = [ ]

3 Select an approximate bore size.

Select an approximate bore size.

M1 + M1i = [ ] (N·m) →(ø)

M2 = [ ] (N·m) →(ø)

M3 + M3i = [ ] (N·m) →(ø)

W = [ ] (N) →(ø)

$E_0 = \frac{1}{2} \times m \times Vm^2$ = [ ] (J) →(ø)

Select a temporary max. bore size.

ø [ ]

[Table 3] Allowable value

Item / Bore size (mm)		W_{max} (N)	$M1_{max}$ (N·m)	$M2_{max}$ (N·m)	$M3_{max}$ (N·m)
SRL3	ø12	30	1.5	0.6	0.6
	ø16	140	5	1	1
	ø20	200	10	1.5	3
	ø25	360	17	5	10
	ø32	620	36	10	21
	ø40	970	77	23	26
	ø50	1470	154	32	42
	ø63	2320	275	52	76
	ø80	3500	460	70	100
	ø100	5000	750	95	130
SRL3-G	ø12	30	1.5	0.6	0.4
	ø16	140	5	1	0.6
	ø20	200	10	1.5	1
	ø25	360	17	5	2
	ø32	620	36	10	4
	ø40	810	41	18	5
	ø50	1440	76	32	9
	ø63	1630	98	51	12
	ø80	3500	351	70	37
	ø100	4130	386	95	42

[Table 4] Allowable absorbed energy value of SRL3 (Eo)

Bore size (mm)	Integrated air cushion (J)	Shock absorber (J)	Model No.
ø12	0.03	2.4	NCK-00-0.3-C
ø16	0.22	2.4	NCK-00-0.3-C
ø20	0.59	5.7	NCK-00-0.7-C
ø25	1.40	10.0	NCK-00-1.2
ø32	2.57	18.0	NCK-00-2.6
ø40	4.27	50.0	NCK-00-7
ø50	9.13	86.0	NCK-00-12
ø63	17.4	86.0	NCK-00-12
ø80	33.0	143.0	NCK-00-20
ø100	57.0	143.0	NCK-00-20

4 Obtain the resultant moment at the stroke end (M_T).
(Confirm that the bore size selected in **3** satisfies the formula below.)

$$M_T = \frac{M1+M1_i}{M1max} + \frac{M2}{M2max} + \frac{M3+M3i}{M3max} + \frac{W}{Wmax} < 1$$

M : Resultant moment (must be smaller than 1)
Wmax : Max. allowable value of W (from Table 3)
M1max : Max. allowable value of M1 (from Table 3)
M2max : Max. allowable value of M2 (from Table 3)
M3max : Max. allowable value of M3 (from Table 3)

- If M_T is much more than 1, change the selection condition.
- If M_T is slightly more than 1, improving the accuracy in STEP 2 may make the value 1 or less. Perform STEP 2 to see the result.

[STEP2]

Next, obtain a more accurate load factor, effective thrust, stroke end speed and resultant moment.

● Calculate the load factor.

$$\alpha = \frac{F_0}{F} \times 100[\%]$$

α : Load factor
F_0 : Force (N) required to move the workpiece
F : Effective thrust of the cylinder (N) (Fig. 1 to 4)

For horizontal operation	For vertical operation
$F_0=F_W+F_1+F_2+F_3+F_L$	$F_0=W+F_1+F_2+F_3+F_L$
Fw : Wx0.2(N) F_2 : $M_2 \times C_2$ Note (N) F_L : Other kinds of resistance (e.g., guide resistance) (N)	F_1 : $M_1 \times C_1$ Note (N) F_3 : $M_3 \times C_3$ Note (N) W : Load (N)

Note: Coefficient to correct the increase of friction caused when moment is applied

[Table 5] Moment friction coefficients 1/m

Bore size (mm)	C_1	C_2	C_3
ø12 or equiv.	8	27	8
ø16 or equiv.	7	24	7
ø20 or equiv.	6	21	6
ø25 or equiv.	5	16	5
ø32 or equiv.	4	13	4
ø40 or equiv.	4	11	4
ø50 or equiv.	4	9	4
ø63 or equiv.	3	8	3
ø80 or equiv.	3	7	3
ø100 or equiv.	3	6	3

[Table 6] Load factor guidelines

Working pressure (MPa)	Load factor (%)
0.2 to 0.3	α ≤ 40
0.3 to 0.6	α ≤ 50
0.6 to 0.7	α ≤ 60

● Graph for obtaining effective thrust

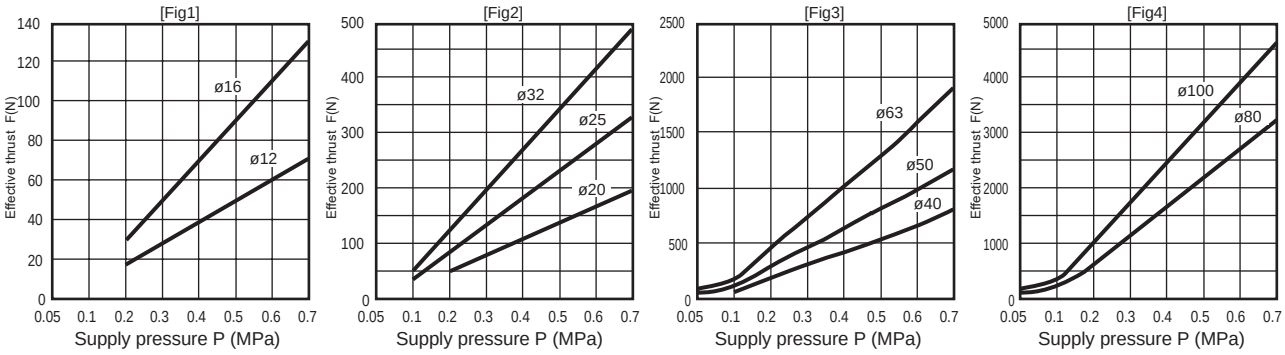

SCP*3
CMK2
CMA2
SCM
SCG
SCA2
SCS2
CKV2
CAV2/COVP/N2
SSD2
SSG
SSD
CAT
MDC2
MVC
SMG
MSD/MSDG
FC*
STK
SRL3
SRG3
SRM3
SRT3
MRL2
MRG2
SM-25
ShkAbs
FJ
FK
Spd Contr
Ending

[STEP3]

In [Fig. 1], obtain the stroke end speed (Vm) and G coefficient from the average speed (Va) and load factor obtained in STEP 2.

● Graph of speed and G coefficient [Fig. 1]

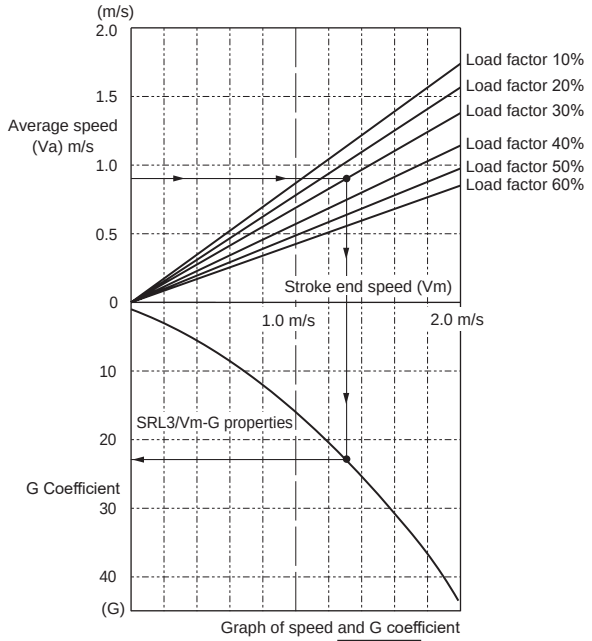

Graph of speed and G coefficient

G Coefficient = [ ]

● The arrow (→) in the figure is the formula for obtaining

Stroke end speed : 1.3 m/s
G Coefficient : 22.5
at
Average speed : 0.9 m/s
Load factor : 30 %

[STEP4]

● Calculate the resultant moment (M_T) using the G coefficient obtained in STEP 3.

M1 + M1i	=	[ ]	(N·m)
M2	=	[ ]	(N·m)
M3 + M3i	=	[ ]	(N·m)
W	=	[ ]	(N)

$$M_T = \frac{M1+M1_i}{M1max} + \frac{M2}{M2max} + \frac{M3+M3i}{M3max} + \frac{W}{Wmax}$$

$M_T \leq 1$

↓

Bore size is decided. (* Refer to [Table 3] in STEP 1)

↓

Confirm cushion capacity

Unit: N·m

Mounting orientation		Horizontal upward	Horizontal downward	Vertical	Horizontal lateral
Dynamic moment	M1i	Wx(ℓ_3 + a)xG			
	M2i	M2i dynamic moment is not generated.			
	M3i	Wxℓ_2xG			

Although the formulas are the same as those in STEP 1, use the G coefficient obtained in STEP 3 for calculation.

[STEP5]

● Confirming cushion capacity

$$E = \frac{1}{2} \times m \times Vm^2$$

E : Kinetic energy at workpiece end (J)
m : Load weight (kg)
Vm : Speed of the piston entering the cushion (m/s)

Checking the allowable absorbed energy of shock absorber
Calculate the colliding energy E and the colliding object equivalent weight Me from the formula in the table below. Confirm that Me is within the allowable values shown in Figure 2. As well, check that it is within the allowable values shown in Table 7.
Note that the allowable colliding object equivalent weight Me and allowable colliding energy E change depending on the colliding speed.

● The allowable absorbed energy changes depending on the colliding speed. Keep it within 1/3 of the max. energy absorption in Table 7 at 2000 mm/s colliding speed, and within 1/2 at 1000 mm/s colliding speed.

[Table 7] Allowable absorbed energy value of SRL3 (Eo)

Bore size (mm)	Integrated air cushion (J)	Shock absorber (J)	Model No.
ø12	0.03	2.4	NCK-00-0.3-C
ø16	0.22	2.4	NCK-00-0.3-C
ø20	0.59	5.7	NCK-00-0.7-C
ø25	1.40	10.0	NCK-00-1.2
ø32	2.57	18.0	NCK-00-2.6
ø40	4.27	50.0	NCK-00-7
ø50	9.13	86.0	NCK-00-12
ø63	17.4	86.0	NCK-00-12
ø80	33.0	143.0	NCK-00-20
ø100	57.0	143.0	NCK-00-20

	Horizontal movement	Vertical down	Vertical up
Applications	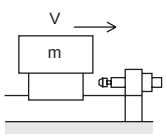	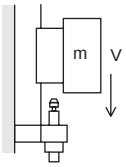	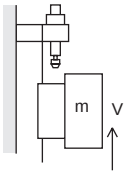
Colliding object equivalent weight Me (kg)	$Me = \frac{2xE}{V^2}$	$Me = \frac{2xE}{V^2}$	$Me = \frac{2xE}{V^2}$
Energy E (J)	$E = \frac{mV^2}{2} + F \cdot St$	$E = \frac{mV^2}{2} + (F+mg) \cdot St$	$E = \frac{mV^2}{2} + (F-mg) \cdot St$

● Code

E	: Colliding energy	J
Me	: Colliding object equivalent weight	kg
m	: Workpiece weight	kg
F	: Cylinder thrust	N
V	: Colliding speed (m/s)	
St	: Shock absorber stroke (m)	
g	: Gravity acceleration 9.8 (m/s^2)	

[Figure 2] Allowable colliding object equivalent weight

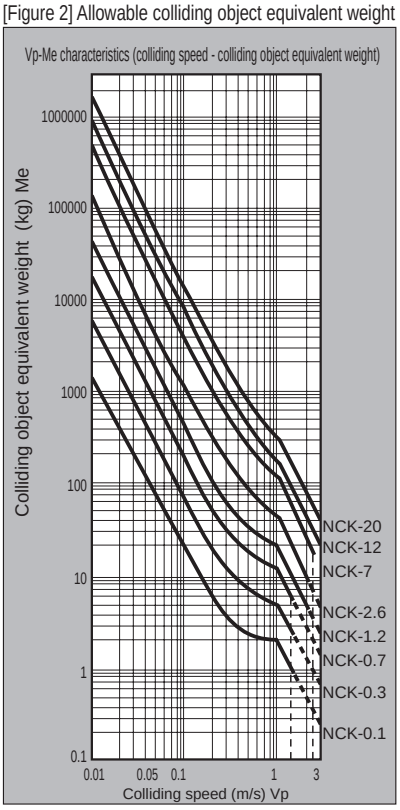

[STEP6]

● The bore size determined from the cushion performance is øA. (Bore size determined in STEP 5)

● The bore size determined from the load conditions is øB. (Bore size determined in STEP 4)

øA ≥ øB → Select øA.

or

→ øB should be used with an external damper.

øA < øB → Select øB.

SCP*3
CMK2
CMA2
SCM
SCG
SCA2
SCS2
CKV2
CAV2/ COVP/N2
SSD2
SSG
SSD
CAT
MDC2
MVC
SMG
MSD/ MSDG
FC*
STK
SRL3
SRG3
SRM3
SRT3
MRL2
MRG2
SM-25
ShkAbs
FJ
FK
Spd Contr
Ending

1 Limits of vertical load

● If the stroke is long, the cylinder tube sags with its self weight and load. In this case, use an intermediate support bracket to keep the support interval in the figure below within the value of the graph.
(The intermediate support bracket is an auxiliary bracket for reducing sag. It is not a fixing bracket.)

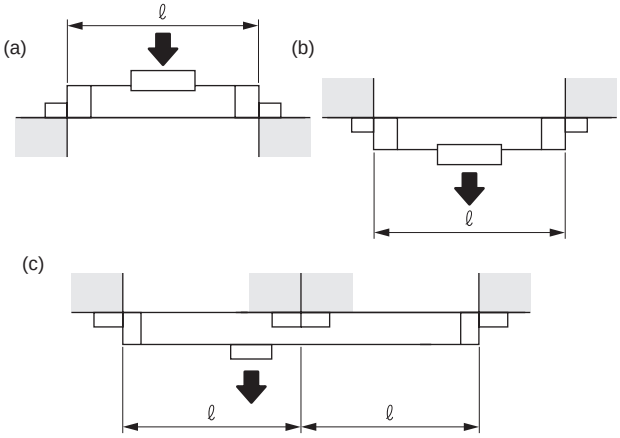

● Allowable load for the supporting methods (a), (b) and (c) above

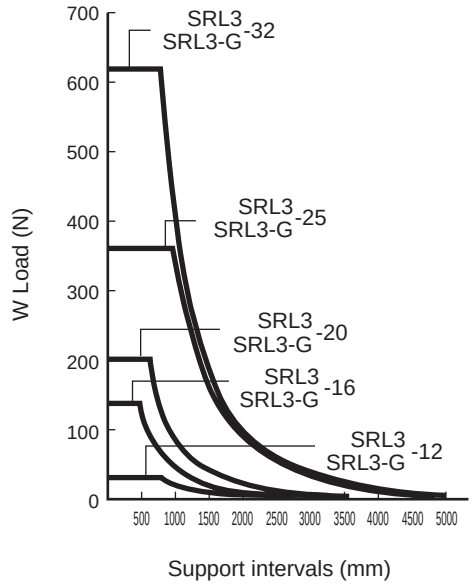

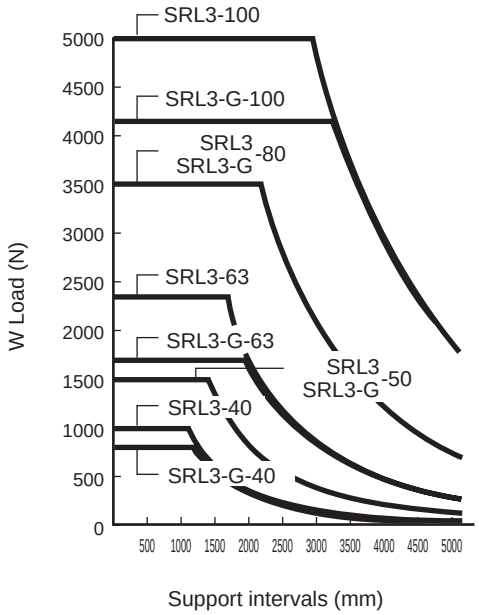

2 Sag of cylinder tube δ

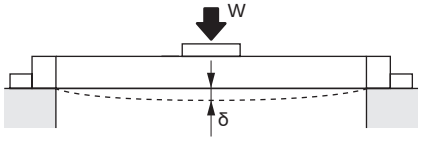

● SRL3-12, SRL3-G-12 (ø12 or equiv.)

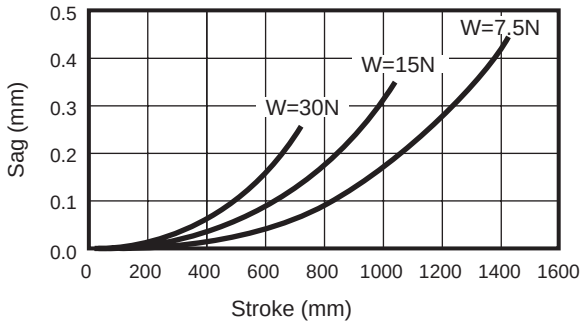

● SRL3-16, SRL3-G-16 (ø16 or equiv.)

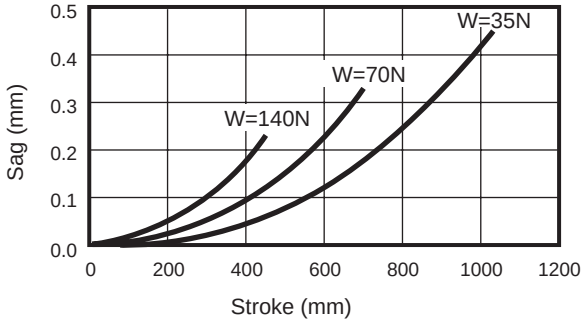

● SRL3-20, SRL3-G-20 (ø20 or equiv.)

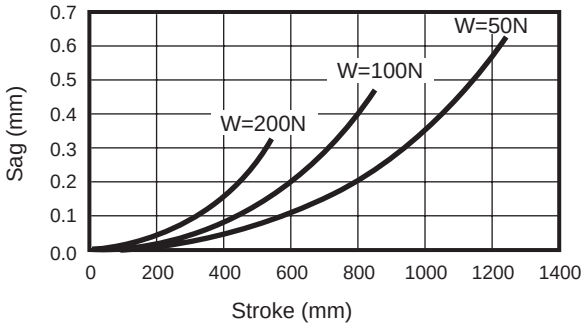

● SRL3-25, SRL3-G-25 (ø25 or equiv.)

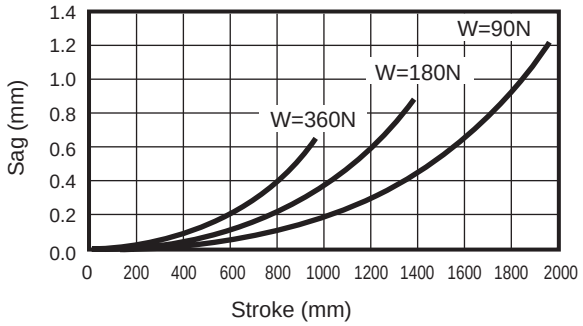

● SRL3-32, SRL3-G-32 (ø32 or equiv.)

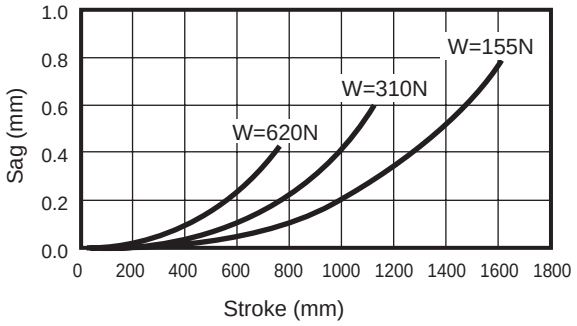

● SRL3-40, SRL3-G-40 (ø40 or equiv.)

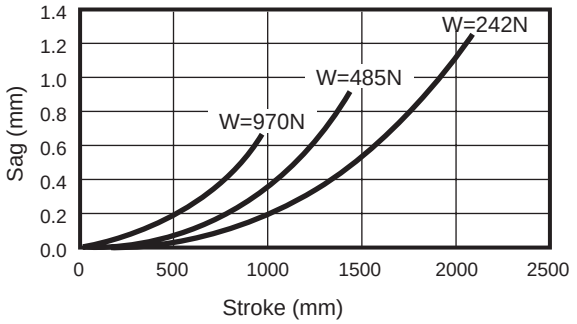

● SRL3-50, SRL3-G-50 (ø50 or equiv.)

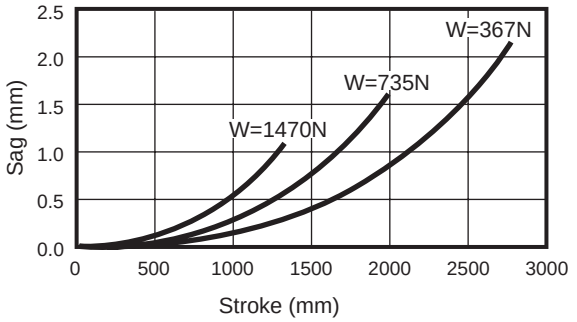

● SRL3-63, SRL3-G-63 (ø63 or equiv.)

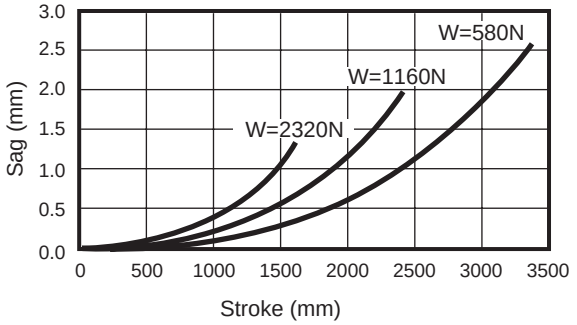

● SRL3-80, SRL3-G-80 (ø80 or equiv.)

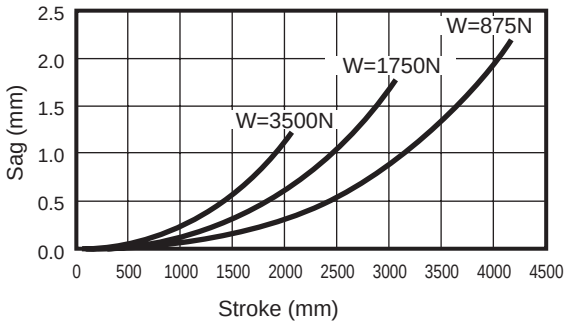

● SRL3-100, SRL3-G-100 (ø100 or equiv.)

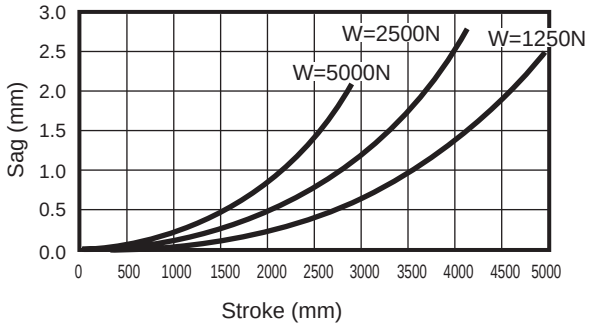

3 Inclination θ of table

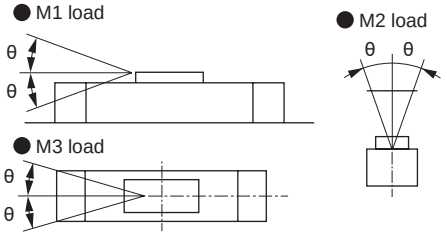

● SRL3-12 (ø12 or equiv.)

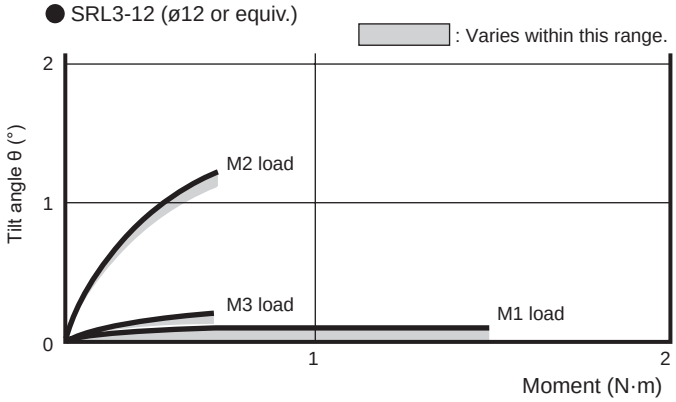

● SRL3-16 (ø16 or equiv.)

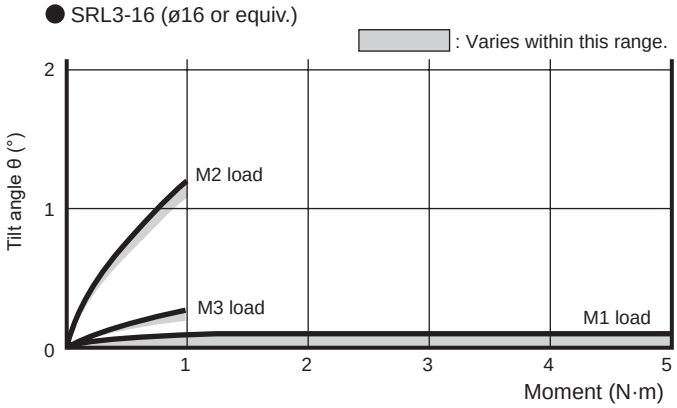

● SRL3-20 (ø20 or equiv.)

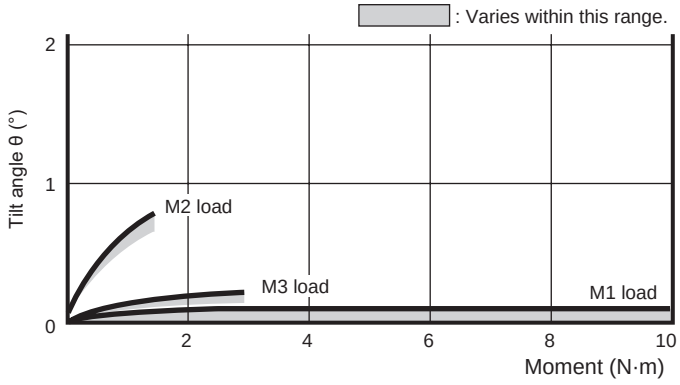

SCP*3
CMK2
CMA2
SCM
SCG
SCA2
SCS2
CKV2
CAV2/COVP/N2
SSD2
SSG
SSD
CAT
MDC2
MVC
SMG
MSD/MSDG
FC*
STK
SRL3
SRG3
SRM3
SRT3
MRL2
MRG2
SM-25
ShkAbs
FJ
FK
Spd Contr
Ending

● SRL3-25 (ø25 or equiv.)

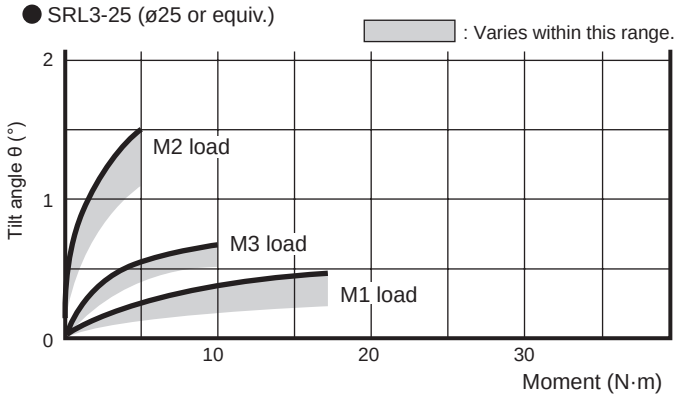

● SRL3-80 (ø80 or equiv.)

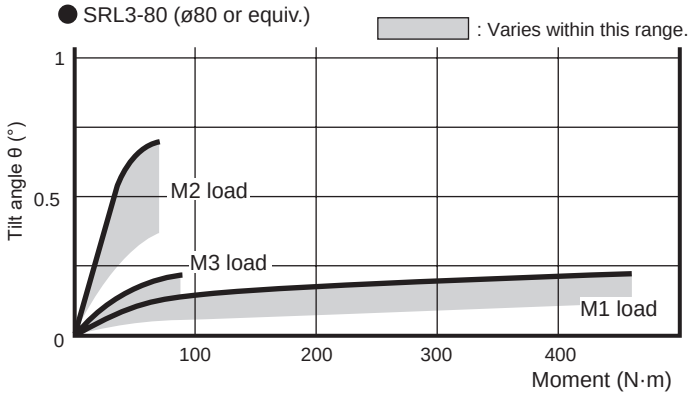

● SRL3-32 (ø32 or equiv.)

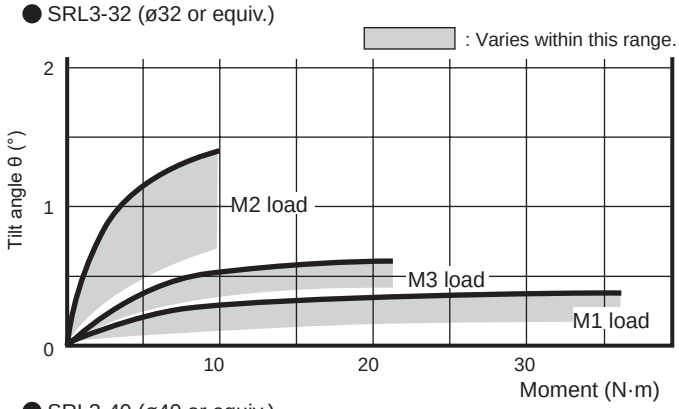

● SRL3-100 (ø100 or equiv.)

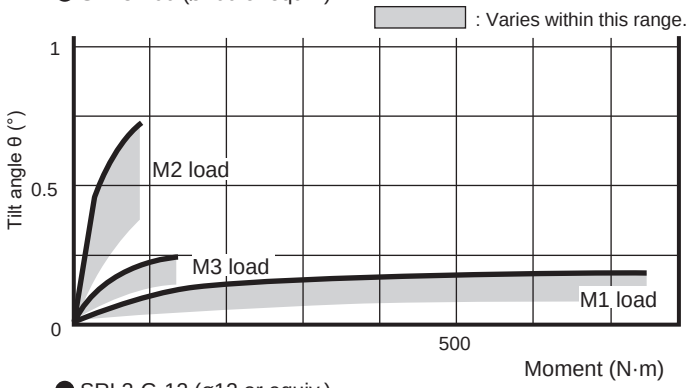

● SRL3-40 (ø40 or equiv.)

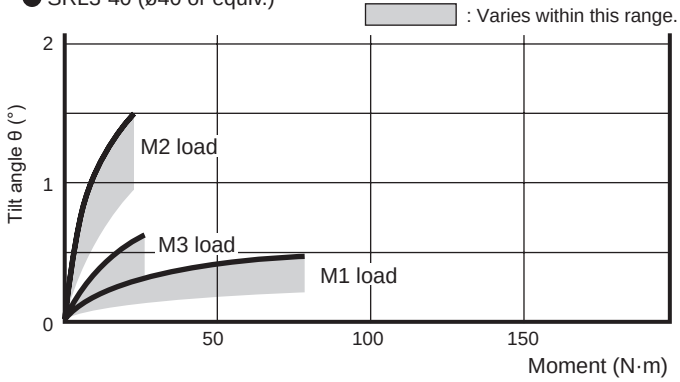

● SRL3-G-12 (ø12 or equiv.)

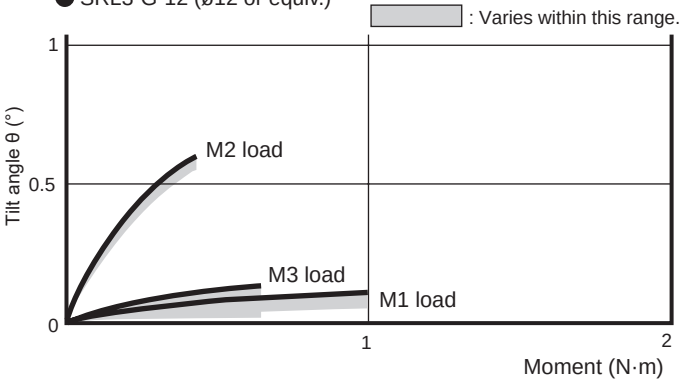

● SRL3-50 (ø50 or equiv.)

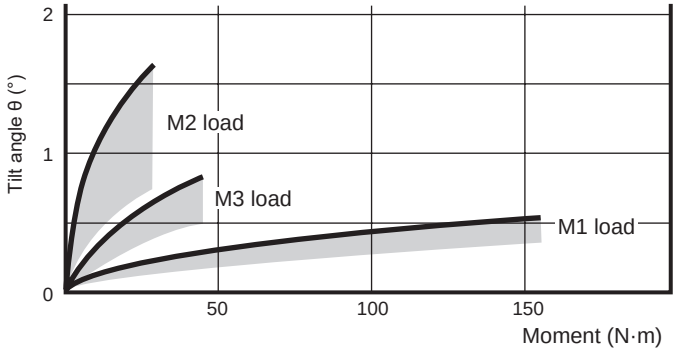

● SRL3-G-16 (ø16 or equiv.)

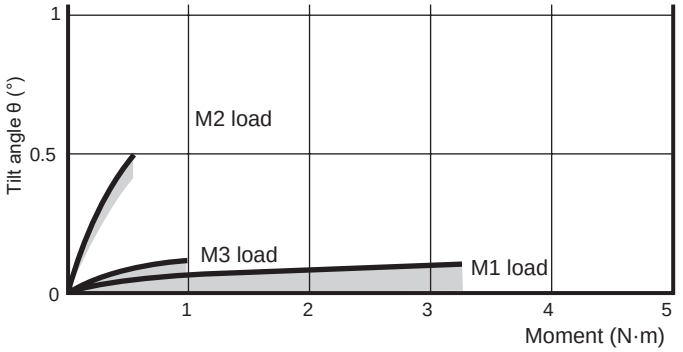

● SRL3-63 (ø63 or equiv.)

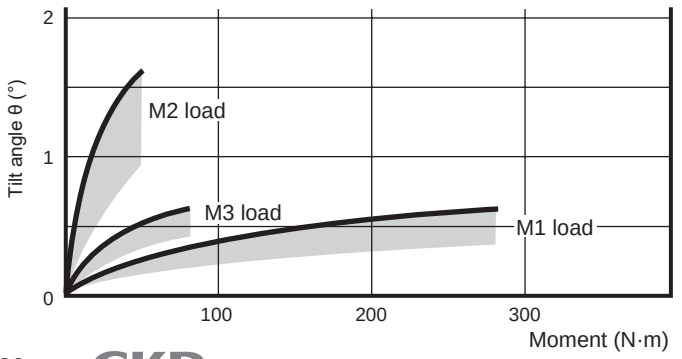

● SRL3-G-20(ø20or equiv.)

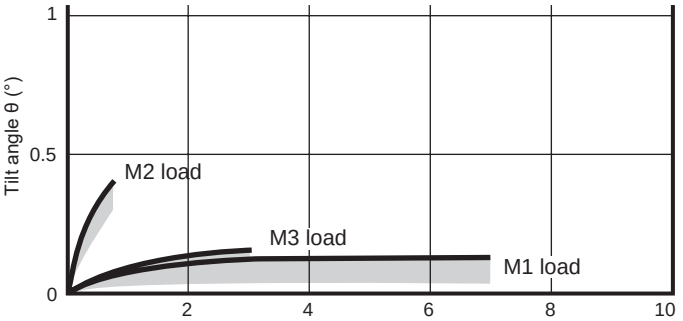

● SRL3-G-25 (ø25 or equiv.)

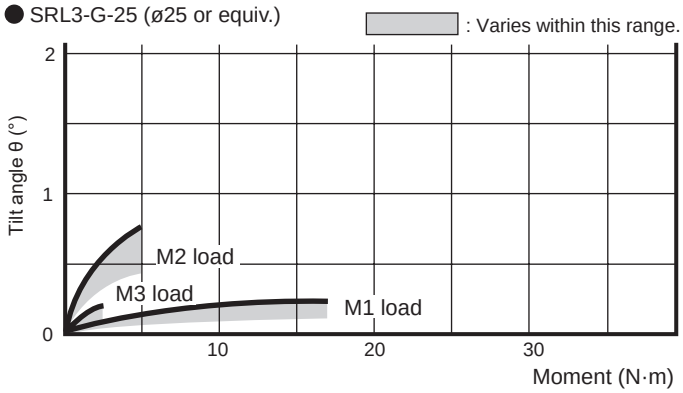

● SRL3-G-32 (ø32 or equiv.)

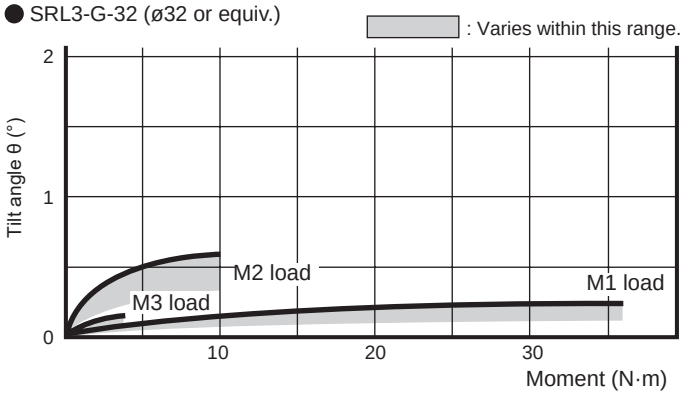

● SRL3-G-40 (ø40 or equiv.)

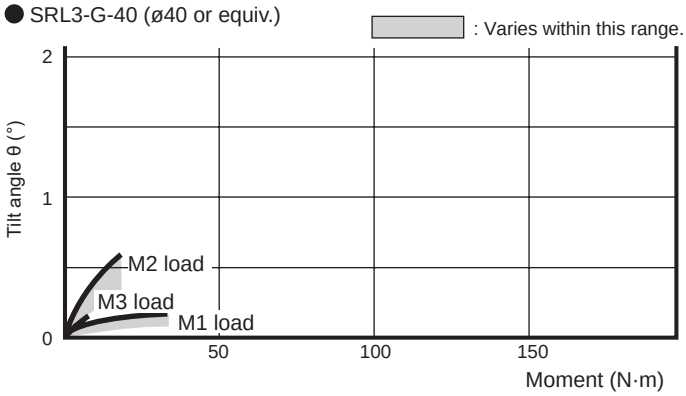

● SRL3-G-50 (ø50 or equiv.)

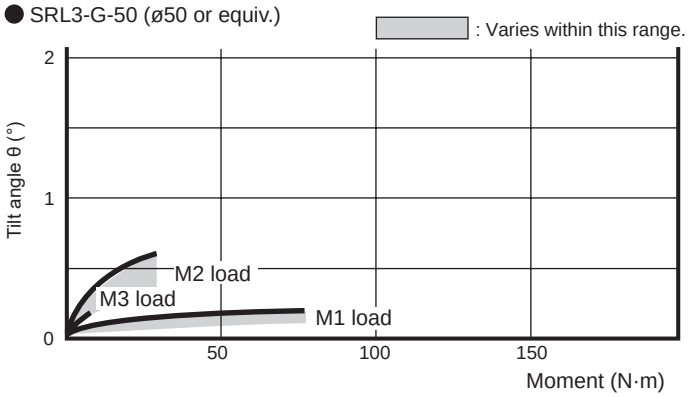

● SRL3-G-63 (ø63 or equiv.)

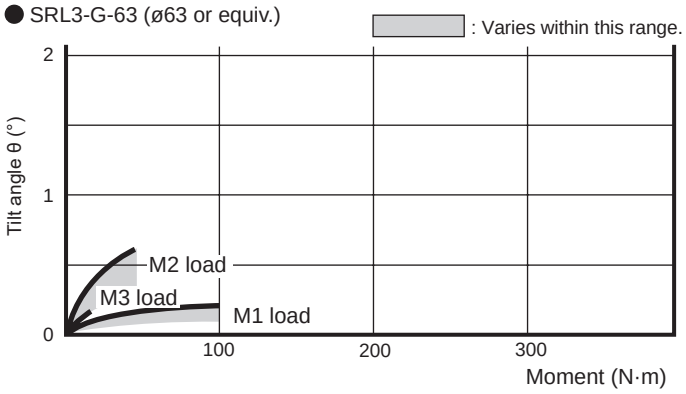

● SRL3-G-80 (ø80 or equiv.)

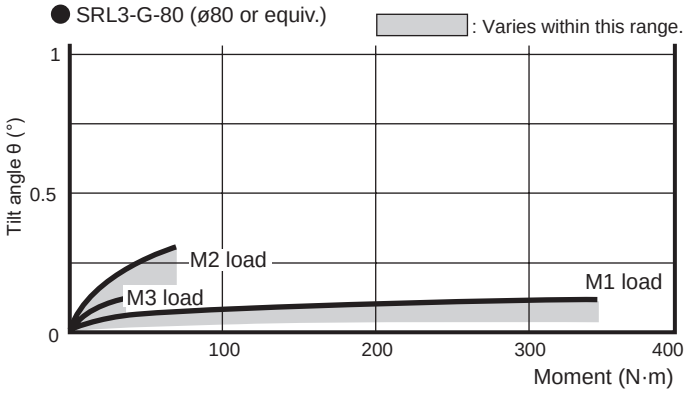

● SRL3-G-100 (ø100 or equiv.)

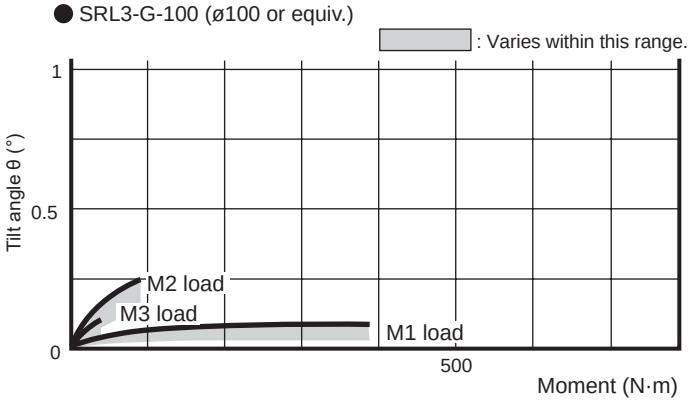

MEMO

Pneumatic components

Safety Precautions

Be sure to read this section before use.
Refer to Intro Page 73 for general information of the cylinder, and to Intro Page 80 for general information of the cylinder switch.

Product-specific cautions: Rodless cylinder SRL3 Series

Design/selection

1. Common

CAUTION

- Pay attention when designing the brake control circuit.
  A slight amount of external leakage is inherent to the structure of SRL3 and other slit rodless cylinders. Therefore, brake control using a 3-position valve with all ports closed may fail to keep the stop position of the table. Use the control circuit with both sides pressurized with 3-position P/A/B connection valve. However, note that the table may deviate from origin if air pressure is applied in the de-energized state when starting after a pressure drop.
  Do not brake with A/B/R connection control: air may leak from both sides, risking popping out when restarting operation, as well as making speed control difficult.

- Basic circuit diagram
  - Horizontal load
    When piping is as shown in Fig. 1, equal pressure is applied to both ends of the piston when stopped to prevent the table from popping out when operation is restarted.

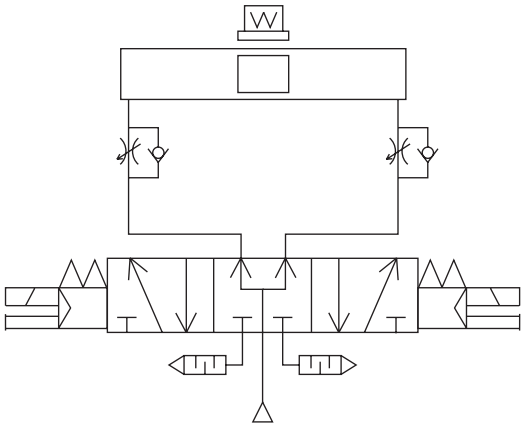

Fig. 1

  - Vertical load
  - If vertical load works as shown in Figure 2, the table moves in the load direction. Install a regulator with check valve on the top to reduce thrust in the load direction to balance the load.

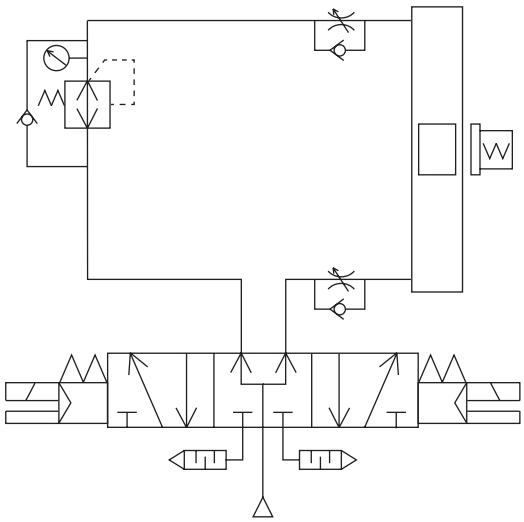

Fig. 2

- Although the structure of SRL3 and other slit rodless cylinders has a slight amount of external air leakage, it does not affect the speed control performance.

- Prevent negative pressure from occurring inside the cylinder tube. Using the cylinder as an air balancer or operating the table with external force or inertia force with all ports closed may cause negative pressure inside the cylinder, resulting in air leakage if the seal belt comes off. Do not use external force or inertia force, otherwise negative pressure will occur inside the cylinder.

2. Position locking SRL3-Q

CAUTION

- Cylinder load factor must be 50% or less. If the load factor is high, the lock may not be released, or the lock section may be damaged.

- To operate the cylinder at 500 mm/s and over, reduce the speed when entering the position locking mechanism to 500 mm/s or less.
  To reduce the speed, add an external shock absorber or deceleration circuit.

SCP*3
CMK2
CMA2
SCM
SCG
SCA2
SCS2
CKV2
CAV2/COVP/N2
SSD2
SSG
SSD
CAT
MDC2
MVC
SMG
MSD/MSDG
FC*
STK
SRL3
SRG3
SRM3
SRT3
MRL2
MRG2
SM-25
ShkAbs
FJ
FK
Spd Contr
Ending

Mounting, installation and adjustment

1. Common

⚠ WARNING

■ How to adjust the stroke adjusting unit

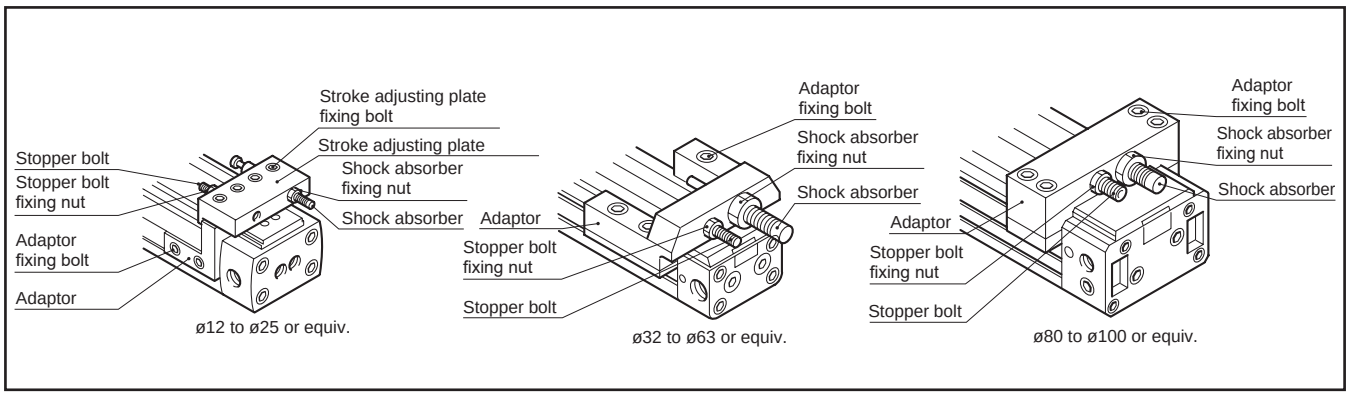

(1) Moving the stroke adjusting unit
Loosen the adaptor fixing bolt (adaptor fixing bolt and stroke adjusting plate fixing bolt for ø12 to ø25) to move the stroke adjusting unit.

(2) Fixing the stroke adjusting unit
After moving the stroke adjusting unit to the desired position, tighten the adaptor fixing bolt (adaptor fixing bolt and stroke adjusting plate fixing bolt for ø12 to ø25) with the value in Table 8 to fix the unit. Note that if tightened with a value less than that in the table below, the stroke adjusting unit may be displaced.

Table 1 Tightening torque of adaptor fixing bolt and stroke adjusting plate fixing bolt

Tightening torque / Model	Adaptor fixing bolt (N·m)	Stroke adjusting plate fixing bolt (N·m)
SRL3-12/16	1 to 1.2	0.5 to 0.7
SRL3-20	2.5 to 2.7	
SRL3-25	5.2 to 5.6	2.5 to 2.7
SRL3-32	22 to 24	—
SRL3-40	44 to 48	—
SRL3-50/63	77 to 83	—
SRL3-80/100	100 to 110	—

(3) Adjusting the stroke with a stopper bolt
{In the case of ø12 to ø20, adjust the stroke normally by moving the stroke adjusting unit, since there is a danger that fingers may be caught in a narrow space between the table and the stroke adjusting plate.}
To adjust the stroke, loosen the stopper bolt fixing nut and turn the stopper bolt. After adjustment, tighten the stopper bolt fixing nut with the value in Table 2 to fix the stopper bolt.(4) Adjusting the shock absorber
Change the operational stroke of the shock absorber to adjust its absorbed energy.
To adjust the operational stroke of the shock absorber, loosen the shock absorber fixing nut and turn the shock absorber. After adjustment, tighten the shock absorber fixing nut with the value in Table 2 to fix the shock absorber.
Because the gap between the shock absorber and the stopper bolt is narrow, it is recommended to remove the adapter (stroke adjusting plate) for adjustment.

(5) Precautions for use

Table 2 Tightening torque of stopper bolt fixing nut and shock absorber fixing nut

Tightening torque / Model	Stopper bolt fixing nut (N·m)	Shock absorber fixing nut (N·m)
SRL3-12/16	1.1 to 1.2	1.3 to 1.8
SRL3-20	2.5 to 2.7	2.9 to 3.9
SRL3-25	8.8 to 9.5	4.5 to 6
SRL3-32	22 to 24	7.5 to 10
SRL3-40	44 to 48	22 to 30
SRL3-50	77 to 83	55 to 70
SRL3-63	200 to 216	55 to 70
SRL3-80/100	215 to 235	100 to 130

● A shock absorber can absorb the rated energy at the rated stroke. However, the initial shock absorber position is adjusted to have an stroke allowance at the cylinder's stroke end.
Therefore, the absorbed energy will be less than the allowable absorbed energy of a discrete shock absorber. If the rated absorbed energy is required, adjust the shock absorber so that the full stroke can be used.At the time, adjust so that the table stops with the stopper bolt.
Even at the cylinder stroke end, if the cylinder's thrust is continuously applied, the shock absorber may be damaged.

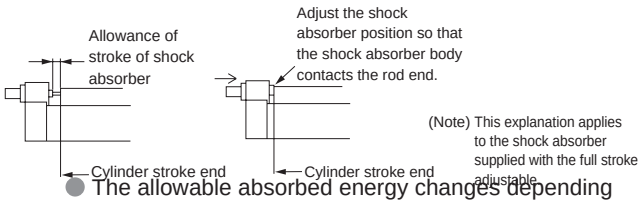

● The allowable absorbed energy changes depending on the colliding speed. Keep it within 1/3 of the max. energy absorption in Table 3 at 2000 mm/s colliding speed, and within 1/2 at 1000 mm/s colliding speed.

Table 3 Specifications of full stroke adjustable with shock absorber (initial set point)

Type	Absorbed energy (J)	Effective stroke (mm)
For SRL3-12/16	2.4	5.5
For SRL3-20	5.7	7
For SRL3-25	10	9
For SRL3-32	18	13
For SRL3-40	50	16.5
For SRL3-50/63	86	21
For SRL3-80/100	143	25

⚠ CAUTION

■ Do not perform electric welding after installing the rodless cylinder.
Otherwise electric current passes into the cylinder and causes sparks between the dust-proof belt and cylinder tube, which will damage the dust-proof belt.

■ The cylinder body may be damaged or may malfunction if a unit with excessive inertia, etc., is moved. Use within the allowable range.

■ Do not apply strong impact or excessive moment to the table.

■ Carefully match the centers when connecting a load with an external guide mechanism.
- Displacement of the shaft center increases as the stroke becomes longer. Consider the connection method (floating) so that the displacement can be absorbed.

■ Keep moment, including inertia force caused by load transfer or stop, within the allowable load. If this valve is exceeded, it will lead to damage.
(When the overhang load is large)
- When the overhang load is large and the cylinder is stopped at both ends by the piston, load inertia causes bending moment even if the energy is within the allowable absorbed energy of the internal cushion.
If the kinetic energy is large and an external cushion is used, adjust so that the cylinder contacts with the center of gravity of workpiece or the closest point to it.

(When an external stopper is used)
- When using an external stopper, make a selection considering bending moment due to the cylinder thrust.
- Moment that operates when the cylinder stops with an external stopper

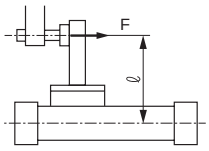

F : Cylinder thrust
ℓ : Length from the center of the cylinder to the stopper

$M1 = F \cdot \ell$

(When an external guide is used)
- If the centers are not coincident when an external guide is attached, movement will not be smooth and resistance due to interference will operate as moment. Design the connection part so that it can accept non-coincidence of the centers.
- Example of guide use

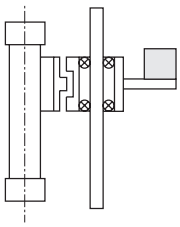

■ Piping port position and operating direction
Bore size ø12 to ø20 equiv.

● Option code (blank, R, B, T)

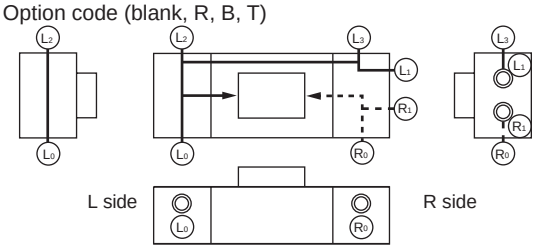

Ⓡ indicates the pressurized ports on R side and Ⓛ indicates the pressurized ports on L side. When the product is shipped from the factory, ports other than one each of Ⓡ and Ⓛ are sealed with plugs. Remove the plugs when piping to the plugged ports. Option codes (D and S) are not available.

Bore size ø25 to ø63 equiv.

● Option code (blank, R, B, T)

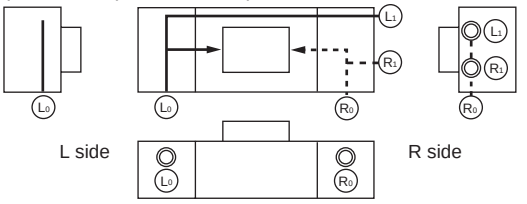

Ⓡ indicates the pressurized ports on R side and Ⓛ indicates the pressurized ports on L side. When the product is shipped from the factory, ports other than one each of Ⓡ and Ⓛ are sealed with plugs. Remove the plugs when piping to the plugged ports. Bottom piping is not possible. If bottom piping is necessary, select the option (D or S).

● Option code (D, S) (bottom piping)

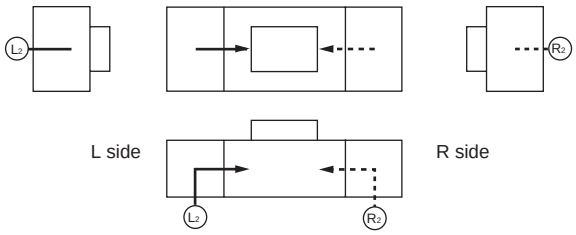

Ⓡ indicates the pressurized ports on R side and Ⓛ indicates the pressurized ports on L side.
There are no ports for piping other than Ⓡ₂ Ⓛ₂.

SCP*3
CMK2
CMA2
SCM
SCG
SCA2
SCS2
CKV2
CAV2/ COVP/N2
SSD2
SSG
SSD
CAT
MDC2
MVC
SMG
MSD/ MSDG
FC*
STK
SRL3
SRG3
SRM3
SRT3
MRL2
MRG2
SM-25
ShkAbs
FJ
FK
Spd Contr
Ending

Bore size ø80/ø100 equiv.

● Option code (blank, R, B, T)

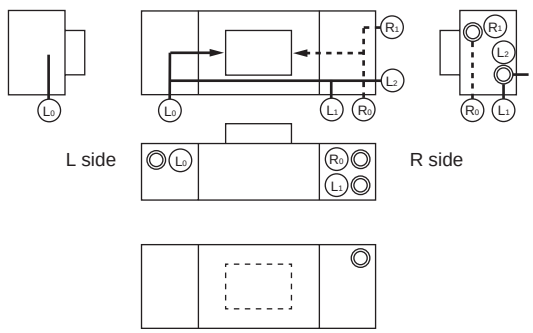

Ⓡ indicates the pressurized ports on R side and Ⓛ indicates the pressurized ports on L side. When the product is shipped from the factory, ports other than one each of Ⓡ and Ⓛ are sealed with plugs. Remove the plugs when piping to the plugged ports.

● Option code (D, S) (bottom piping)

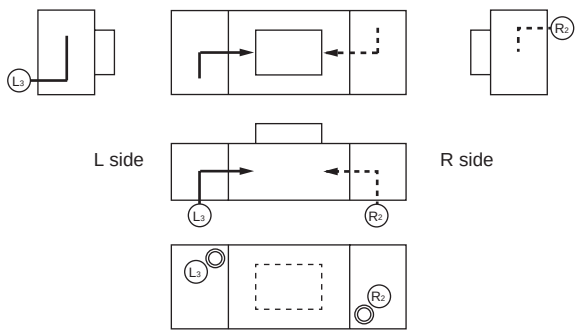

There are no ports for piping other than Ⓡ₂ Ⓛ₃.

■ CKD's shock absorber is a repair part.
Replace when the energy absorption performance has degraded or the operation is not smooth.

■ Install the switch in parallel with the mounting groove and do not apply force to the lead wire.

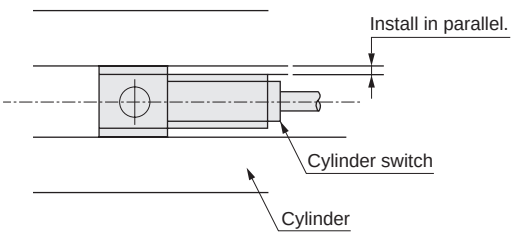

2. Position locking SRL3-Q

⚠ WARNING

■ How to adjust the stroke adjusting unit

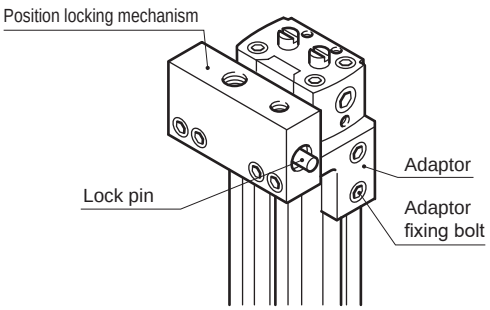

● Loosen the adaptor fixing bolt to move the position locking mechanism.
The type with shock absorber (A or A1) should be used in this case. Using the shock absorber for fine adjustment of the stroke will displace the position locking mechanism, which prevents secure locking. Therefore, use the adaptor fixing bolt for fine adjustment.

● After moving it to the desired position, tighten the adaptor fixing bolt with the value in the table below. If tightened with a value less than that in the table below, the position locking mechanism may be displaced.

● When setting a load, make sure to check that the lock mechanism functions before installing the product.

Model	Adaptor fixing bolt tightening torque (N·m)
SRL3-Q-12/16	1 to 1.2
SRL3-Q-20	2.5 to 2.8
SRL3-Q-25	5.2 to 5.6
SRL3-Q-32	22 to 24
SRL3-Q-40	44 to 48
SRL3-Q-50/63	77 to 83
SRL3-Q-80/100	100 to 110

■ Piping

● Piping to the position locking mechanism is necessary.

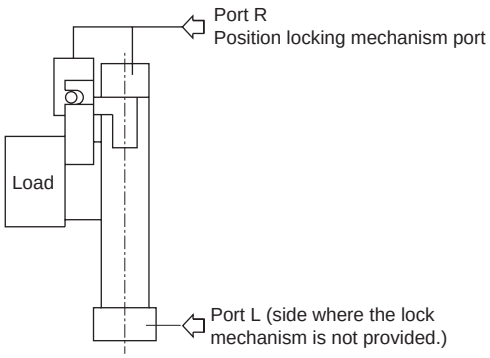

● Divide the piping to R side of the rodless cylinder using a tee fitting, etc., and with the same kind of pipe, connect the piping to the position locking mechanism.

● When the piping to the position locking mechanism is long and thin, or when the speed controller is far away from the cylinder port, note that it takes time to engage the lock. Clogging in the silencer mounted on the EXH port of the valve may cause the same result.

■ Supply pressure equal to or higher than the min. working pressure to the position locking mechanism port.

■ Manual release

● Push in the lock pin of position locking mechanism using a stick. At this time, make sure to supply pressure to port L, and before unlocking, check that load is not applied to the lock mechanism.
If pressure is supplied to port R when both ports R and L are exhausted and the piston is locked, the lock may be unlocked and the table may pop out. This can be extremely hazardous.

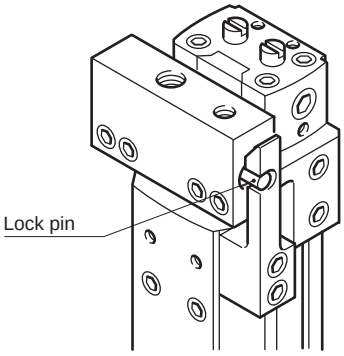

■ Valves

● Keeping the cylinder with pressure applied to the lock mechanism may cause the lock pin to come off, which is very dangerous. Do not use 3-position closed center and 3-position P/A/B connection valves.

● If back pressure is applied to the locking mechanism, the lock may be released. Use a discrete valve, or use an individual exhaust manifold.

● For usage where the drop rate is increased using the quick exhaust valve, the lock may not release normally because the cylinder body starts operating before the lock pin.
For the position locking cylinder, do not use the quick exhaust valve.

Use/maintenance

1. Position locking SRL3-Q

⚠ WARNING

- For safety purposes, prevent the load from falling under its own weight during maintenance.

- In the case of the cylinder with air cushion, if the air cushion needle at the lock mechanism side is tightened excessively, the piston bounds at the stroke end, the lock lever contacts the lock pin violently and the lock mechanism may be damaged. Also, if the air cushion needle is opened too much, the piston bounces off at the stroke end, which may similarly damage the mechanism. Adjust the needle of the air cushion so that there is no bound.
  When stopping the piston with an external buffer device (shock absorber, etc.), adjust it similarly so that there is no bound.
  Inspect the piston once or twice per year to make sure there is no damage to the retainer caused by this phenomenon.

⚠ CAUTION

- After the lock mechanism is manually operated, make sure to confirm manual operation and return the mechanism to the original state before use. Do not perform manual operation except for adjustment, as it is dangerous.

- When mounting or adjusting the cylinder, release the lock. If mounting work, etc., is done while the lock is engaged, the lock part may be damaged.

- Do not use multiple synchronized cylinders. Do not use so that 1 workpiece is moved by synchronizing 2 or more position locking cylinders. Lock release may fail for one of the cylinders.

- Use the speed controller with meter-out. If the meter-in control is used, the lock may not be able to be released.

- At the side where the lock mechanism is attached, be sure to use the cylinder from the stroke end. If the cylinder piston does not reach the stroke end, the lock may not be engaged or the lock may not be able to be released.

- Apply grease regularly to the sliding part of the lock lever.

SRG3

High precision guided rodless cylinder

Rodless

ø12/ø16/ø20/ø25

Overview

High precision rodless cylinder (ø12 to ø25) with integrated high precision 1-axis linear guide. Perfect for accurate conveyors for small parts.

Features

Compact and high-precision

The compact guided rodless cylinder has a body of SRL3 with a high precision 1-axis guide integrated on the side. It is small enough to contribute to downsizing of the system.

Thin system as with SRL3

Our original flat rodless cylinder structure has a table in a very low position and thus enables you to design a thin system. The stroke is common between this cylinder and SRL3, the base model. Therefore they are dimensionally interchangeable.

Common port

A common port (one-side piping) or standard port (both sides piping) can be selected according to the installation location.
Equipment can be downsized.

CONTENTS

Series variation	1646
Variation and option combination selection table	1648
● Double acting (SRG3)	1650
Selection guide	1662
Technical data	1667
⚠ Safety precautions	1670

The cylinder switches T2YH, T2YV, T3YH, and T3YV are scheduled for end of production at the end of December 2023.

High precision guided rodless cylinder SRG3 Series

Variation	Model No. JIS symbol	Bore size (mm)	Standard stroke (mm)									Min. stroke (mm)
			200	300	400	500	600	700	800	900	1000	
Double acting	SRG3 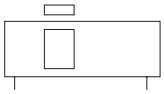	ø12 or equiv.	●	●	●							1
		ø16 or equiv./ ø20 or equiv.	●	●	●	●	●	●	●			
		ø25 or equiv.	●	●	●	●	●	●	●	●	●	

●: Standard, ◎: Option, ▒ : Not available

Max. stroke (mm)	Custom stroke (per mm)	Mounting			Cushion				Option					Switch	Page
		Basic	Axial foot	Axial foot	Without cushion	Both sides cushioned	R side cushioned	L side cushioned	Both-side full stroke adjustable with shock absorber	R side full stroke adjustable with shock absorber	L side full stroke adjustable with shock absorber	Full stroke adjustable with adjusting bracket to be added later	Larger thread for table installation		
		00	LB	LB1	N	B	R	L	A	A1	A2	A3	H		
450	1	●	●	●	●	●	●	●	◎	◎	◎	◎	◎	◎	1650
800		●	●	●	●	●	●	●	◎	◎	◎	◎	◎		
1000		●	●	●	●	●	●	●	◎	◎	◎	◎			

SCP*3
CMK2
CMA2
SCM
SCG
SCA2
SCS2
CKV2
CAV2/COVP/N2
SSD2
SSG
SSD
CAT
MDC2
MVC
SMG
MSD/MSDG
FC*
STK
SRL3
SRG3
SRM3
SRT3
MRL2
MRG2
SM-25
ShkAbs
FJ
FK
Spd Contr
Ending

Variation and option combination selection table

◎: Option
○: Available (made-to-order product)
△: Available depending on conditions (Contact CKD.)
x: Not available

Category		Category	Variation	Port thread		Option									
			Double acting basic	NPT	G	Stroke adjustable Both sides	Stroke adjustable R side	Stroke adjustable L side	Stroke adjustable with retrofitted adjusting bracket	Larger thread for table installation	Port/cushion needle position specification	Port/cushion needle position specification	Port/cushion needle position specification	Port/cushion needle position specification	Port/cushion needle position specification
		Code	None	N	G	A	A1	A2	A3	H	R	B	T	D	S
Variation	Double acting basic	Blank		○	○	◎	◎	◎	◎	◎	◎	◎	◎	◎	◎
Port thread	NPT	N			x	○	○	○	○	○	○	○	○	○	○
Port thread	G	G				○	○	○	○	○	○	○	○	○	○
Option	Stroke adjustable Both sides	A					x	x	x	◎	◎	◎	◎	◎	◎
Option	Stroke adjustable R side	A1						x	x	◎	◎	◎	◎	◎	◎
Option	Stroke adjustable L side	A2							x	◎	◎	◎	◎	◎	◎
Option	Stroke adjustable with retrofitted adjusting bracket	A3								◎	◎	◎	◎	◎	◎
Option	Larger thread for table installation	H									◎	◎	◎	◎	◎
Option	Port/cushion needle position specification	R										x	x	x	x
Option	Port/cushion needle position specification	B											x	x	x
Option	Port/cushion needle position specification	T												x	x
Option	Port/cushion needle position specification	D													x
Option	Port/cushion needle position specification	S													
Accy.	Cylinder switch	Listed separately	◎	○	○	◎	◎	◎	◎	◎	◎	◎	◎	◎	◎

[Example of model No.]

SRG3 - 00 - 20 ( ) B - 200 - M0H - D - A1 H

- SRG3: Model No.
- 00: A Mounting
- 20: B Bore size
- ( ): C Port thread
- B: D Cushion
- 200: E Stroke
- M0H: F Switch model No.
- D: G Switch quantity
- A1 H: H Option
  * List in order from left to right in the above table.

Model No.: High precision guided rodless cylinder

A Mounting	: Basic
B Bore size	: ø20 mm
C Port thread	: Rc thread
D Cushion	: Both sides cushioned
E Stroke	: 200 mm
F Switch model No.	: Reed MOH switch, lead wire 1m
G Switch quantity	: 2
H Option	: R side full stroke adjustable, with shock absorber, larger table mounting thread

MEMO

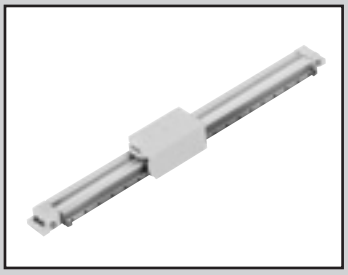

High precision guided rodless cylinder

SRG3 Series

● Bore size: ø12/ø16/ø20/ø25 or equiv.

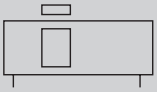

RoHS CAD

Specifications

Item	SRG3 (Standard/with switch)			
Bore size	ø12	ø16	ø20	ø25
Actuation	Double acting			
Working fluid	Compressed air			
Max. working pressure MPa	0.7 (≈100 psi, 7 bar)			
Min. working pressure MPa	0.2 (≈29 psi, 2 bar)			0.1 (≈15 psi)
Proof pressure MPa	1.05 (≈150 psi, 10.5 bar)			
Ambient temperature °C	5 (41°F) to 60 (140°F)			
Port size	M5		Rc1/8	
Stroke tolerance mm	$^{+2.0}_{0}$			
Working piston speed mm/s	50 to 1000 (*1)			
Repeat stopping accuracy mm	±0.05 (With shock absorber)			
Cushion	Air cushion			
Lubrication	Not required (Use turbine oil class 1 ISO VG32 if necessary for lubrication. Once lubricated, the cylinder will need periodic lubrication.)			

*1: For common port piping, the working piston speed varies depending on the stroke. Contact CKD.

Allowable absorbed energy

Bore size (mm)	Cushioned		Without cushion	With shock absorber (initial set point)	
	Allowable absorbed energy (J)	Cushion stroke (mm)	Allowable absorbed energy (J)	Absorbed energy (J)	Effective stroke (mm)
ø12 or equiv.	0.03	14.5	0.003	2.4	5.5
ø16 or equiv.	0.22	19.2	0.007	2.4	5.5
ø20 or equiv.	0.59	22.2	0.010	5.7	7
ø25 or equiv.	1.40	20.9	0.015	10	9

Stroke

Bore size (mm)	Standard stroke (mm)	Max. stroke (mm)	Min. stroke (mm)
ø12 or equiv.	200, 300, 400	450	1
ø16 or equiv.	200, 300, 400, 500 600, 700, 800	800	
ø20 or equiv.			
ø25 or equiv.	200/300/400/ 500/600/700/ 800/900/1000	1000	

* The custom stroke is available in 1 mm increments.

Number of installed M-switches and min. stroke (mm)

Switch quantity	1		2		3		4		5		6	
Switch model No. / Bore size (mm)	M*V	M*H	M*V	M*H	M*V	M*H	M*V	M*H	M*V	M*H	M*V	M*H
ø12 or equiv.	10	10	30	45(70)	60	90(120)	90	135(170)	120	180(220)	150	225(270)
ø16 or equiv.	10	10	30	45(70)	60	90(120)	90	135(170)	120	180(220)	150	225(270)
ø20 or equiv.	10	10	30	45(70)	60	90(120)	90	135(170)	120	180(220)	150	225(270)
ø25 or equiv.	10	10	30	45(70)	60	90(120)	90	135(170)	120	180(220)	150	225(270)

Note: Values in ( ) are the min. stroke with switch of the full stroke adjustable.

Number of installed T-switches and min. stroke (mm)

Switch quantity	1		2		3		4		5		6	
Switch model No. / Bore size (mm)	T*V	T*H	T*V	T*H	T*V	T*H	T*V	T*H	T*V	T*H	T*V	T*H
ø12 or equiv.	5	5	45	50(70)	85	100(120)	125	150(170)	165	200(220)	205	250(270)
ø16 or equiv.	5	5	45	50(70)	85	100(120)	125	150(170)	165	200(220)	205	250(270)
ø20 or equiv.	5	5	45	50(70)	85	100(120)	125	150(170)	165	200(220)	205	250(270)
ø25 or equiv.	10	10	45	50(70)	85	100(120)	125	150(170)	165	200(220)	205	250(270)

Note: Values in ( ) are the min. stroke with switch of the full stroke adjustable.

Switch specifications (M-switch)

● 1-color/2-color LED

Item	2-wire proximity		3-wire proximity		
	M2V,M2H	M2WV (2-color LED)	M3H,M3V	M3PH/M3PV (made to order)	M3WV
Applications	Dedicated for programmable controller		For programmable controller, relay, IC circuit, compact solenoid valve		
Output method	-		NPN output	PNP output	NPN output
Power supply voltage	-		4.5 to 28 VDC		10 to 28 VDC
Load voltage	10 to 30 VDC		30 VDC or less		
Load current	5 to 20 mA		100 mA or less	100 mA or less	100 mA or less
Indicator	LED (Lit when ON)	Red/green LED (Lit when ON)	LED (Lit when ON)	Yellow LED (Lit when ON)	Red/green LED (Lit when ON)
Leakage current	1 mA or less		10 μA or less	0.05 mA or less	10 μA or less
Weight g	1 m:22 3 m:57 5 m:93				

Item	2-wire reed			
	M0V, M0H		M5V, M5H	
Applications	Programmable controller, relay		For programmable controller, relay, IC circuit (without indicator lamp), serial connection	
Power supply voltage	-		-	
Load voltage	12/24 VDC	110 VAC	24 VDC or less	110 VAC or less
Load current	5 to 50 mA	7 to 20 mA	50 mA or less	20 mA or less
Indicator	LED (Lit when ON)		No indicator lamp	
Leakage current	0 mA			
Weight g	1 m:22 3 m:57 5 m:93			

*1: Refer to Ending Page 1 for detailed switch specifications and dimensions.

Switch specifications (T-switch)

● 2-color LED

Item	2-wire proximity		3-wire proximity	
	T2YH/T2YV	T2WH/T2WV	T3YH/T3YV	T3WH/T3WV
Applications	Dedicated for programmable controller		For programmable controller, relay	
Output method	-		NPN output	NPN output
Power supply voltage	-		10 to 28 VDC	
Load voltage	10 to 30 VDC	24 VDC ±10%	30 VDC or less	
Load current	5 to 20 mA (*3)		50 mA or less	
Indicator	Red/green LED (Lit when ON)	Red/green LED (Lit when ON)	Red/green LED (Lit when ON)	Red/green LED (Lit when ON)
Leakage current	1 mA or less		10 μA or less	
Weight g	1 m:33 3 m:87 5 m:142	1 m:18 3 m:49 5 m:80	1 m:33 3 m:87 5 m:142	1 m:18 3 m:49 5 m:80

● For AC magnetic field

Item	2-wire proximity
	T2YD, T2YDT (*4)
Applications	Dedicated for programmable controller
Indicator	Red/green LED (Lit when ON)
Load voltage	24 VDC ±10%
Load current	5 to 20 mA
Internal voltage drop	6V or less
Leakage current	1.0 mA or less
Weight g	1 m:61 3 m:166 5 m:272

*1 : Refer to Ending Page 1 for detailed switch specifications and dimensions.
*2 : Switches other than the above models, such as switches with connectors, are also available. Refer to Ending Page 1.
*3 : The max. load current is 20 mA at 25°C. The current is lower than 20 mA if the operating ambient temperature around the switch is higher than 25°C. (5 to 10 mA at 60°C)
*4 : AC magnetic field proof switch (T2YD/T2YDT) cannot be used in DC magnetic field.

Cylinder weight

Unit: kg

Bore size (mm)	Weight for 0 mm stroke				Mounting bracket weight		Additional weight per 100mm stroke
	Basic (00)	Foot		Switch weight	T type	M type	
		(LB)	(LB1)				
ø12 or equiv.	0.46	0.47	0.48	Refer to the weight in the switch specifications.	0.005	0.001	0.23
ø16 or equiv.	0.61	0.62	0.64				0.28
ø20 or equiv.	0.96	0.98	1.02				0.33
ø25 or equiv.	1.73	1.83	1.83				0.52

How to order

No switch (built-in magnet for switch)

SRG3 - 00 - 25 ◯ B - 200 ——— A

With switch (built-in magnet for switch)

SRG3 - 00 - 25 ◯ B - 200 - M0H - R - A

- Ⓐ Mounting *1
- Ⓑ Bore size
- Ⓒ Port thread
- Ⓓ Cushion
- Ⓔ Stroke
- Ⓕ Switch model No. *3/*4
- Ⓖ Switch quantity
- Ⓗ Option *5, *6 *7, *8 *9

Code	Description
Ⓐ Mounting	
00	Basic
LB	Axial foot
LB1	Axial foot

Ⓑ Bore size (mm)	
12	ø12
16	ø16
20	ø20
25	ø25

Ⓒ Port thread	
Blank	Rc thread (M5 for ø12 and ø16)
N	NPT thread (ø20 or more) (made-to-order product)
G	G thread (ø20 or more) (made-to-order product)

Ⓓ Cushion	
B	Both sides cushioned
R	R side cushioned
L	L side cushioned
N	Without cushion

Ⓔ Stroke (mm)

Bore size	Stroke *2	Custom stroke
ø12	1 to 450	In 1 mm increments
ø16	1 to 800	
ø20	1 to 800	
ø25	1 to 1000	

Ⓕ Switch model No.

Axial lead wire	Radial lead wire	Contact	Voltage AC	Voltage DC	Indicator	Lead wire
M0H*	M0V*	Reed	●	●	1-color LED	2-wire
M5H*	M5V*	Reed	●	●	No indicator lamp	2-wire
M2H*	M2V*	Proximity		●	1-color LED	
-	M2WV*	Proximity		●	2-color LED	2-wire
M3H*	M3V*	Proximity		●	1-color LED	
-	M3WV*	Proximity		●	2-color LED	3-wire
M3PH*	M3PV*	Proximity		●	1-color LED (custom)	3-wire
T2WH*	T2WV*	Proximity		●	2-color LED	2-wire
T2YH*	T2YV*	Proximity		●	2-color LED	2-wire
T3WH*	T3WV*	Proximity		●	2-color LED	3-wire
T3YH*	T3YV*	Proximity		●	2-color LED	3-wire
T2YD*	-	Proximity		●	2-color LED AC magnetic field	2-wire
T2YDT*	-	Proximity		●	2-color LED AC magnetic field	2-wire

*** Lead wire length**	
Blank	1 m (standard)
3	3 m (option)
5	5 m (option)

Ⓖ Switch quantity	
R	1 on R side
L	1 on L side
D	2
T	3
4	4 (when there are more than 4 switches, indicate switch quantity.)

Ⓗ Option

	Bore size (ø)			12	16	20	25
A	Both-sides full stroke adjustable, shock absorber			●	●	●	●
A1	R side full stroke adjustable, shock absorber			●	●	●	●
A2	L side full stroke, adjustable, shock absorber			●	●	●	●
A3	Full stroke adjustable, adjusting bracket to be added			●	●	●	●
H	Larger thread for table installation			●	●	●	
Blank	Port position	F (Standard)	Cushion needle position F (Standard)	●	●	●	●
R	Port position	R (Common port)	Cushion needle position F	●	●	●	●
B	Port position	F	Cushion needle position B	●	●	●	
T	Port position	R (Common port)	Cushion needle position B	●	●	●	
D	Port position	D	Cushion needle position F				●

⚠ Precautions for model No. selection

*1 : Mounting bracket will be shipped assembled with the product.
*2 : Refer to page 1650 for the min. stroke with switch.
*3 : Avoid environments where the cylinder is exposed to welding spatter.
Be careful with T2YD and T2YDT in use.
*4 : Switches other than Ⓕ Switch model No. are also available. (Made to order) Refer to Ending Page 1 for details.
*5 : Refer to the dimensions for the port and cushion needle position codes.
*6 : For option codes "R" and "T", the mounting will be "00" or "LB1".
(Piping with "LB" is not possible for option codes "R" and "T".)
*7 : A flat nut is already attached to option code "A3" so that you can add the full stroke adjusting bracket later.
*8 : The thread size of option code "H" is M4 for ø12/ø16 and M5 for ø20.
*9 : LB1 with port position D is not possible. (ø25)

[Example of model No.]

SRG3-00-25B-200-M0H-R-A

Model: High precision guided rodless cylinder

Ⓐ Mounting	: Basic
Ⓑ Bore size	: ø25 mm
Ⓒ Port thread	: Rc thread
Ⓓ Cushion	: Both sides cushioned
Ⓔ Stroke	: 200 mm
Ⓕ Switch model No.	: Reed MOH switch
Ⓖ Switch quantity	: 1 on R side
Ⓗ Option	: Both-side full stroke adjustable, with shock absorber

How to order switch

(Common with SRL3.)

● Switch body + mounting bracket set

SRL3 - M0H

Switch model No.
(Item Ⓕ on page 1652)

● Switch body only

SW - M0H

Switch model No.
(Item Ⓕ on page 1652)

● Mounting bracket set (*2)

M-switch

SRL3 - M

T-switch

SRL3 - T

● Lead wire holder (*3)

SRL3 - MH

(*1) "Switch body + mounting bracket set" does not include lead wire holders. Order lead wire holders separately if necessary.
(*2) The mounting bracket is different between the M-switch and T-switch.
(*3) The quantity of lead wire holders per set is 10.

How to order discrete shock absorber

SRL3 - 20 - NCK

Bore size
(Item Ⓑ on page 1652)

(One shock absorber, one shock absorber fixing hexagon nut)

Applicable shock absorber model No.

Model No.	Compatible model
NCK-00-0.3-C	SRG3-12/16
NCK-00-0.7-C	SRG3-20
NCK-00-1.2	SRG3-25

How to order repair parts

SRL3 - 20 K - 200

Bore size
(Item Ⓑ on page 1652)

Stroke
(Item Ⓔ on page 1652)

How to order mounting bracket

SRL3 - LB - 20

Mounting
(Item Ⓐ on page 1652)

Bore size
(Item Ⓑ on page 1652)

(Bracket x 2, mounting bolt x 4)

How to order full stroke adjusting bracket kit

(Applies to option code A3.)

SRG3 - 20 - A (Both-side full stroke adjusting bracket kit)
- A1 (R side full stroke adjusting bracket kit)
- A2 (L side full stroke adjusting bracket kit)

Bore size
(Item Ⓑ on page 1652)

(For configurations, refer to page 1659)

Theoretical thrust table

(Unit: N)

Bore size (mm)	Operating direction	Working pressure MPa						
		0.1	0.2	0.3	0.4	0.5	0.6	0.7
ø12	Push/Pull	-	27.7	41.5	55.3	69.1	83.0	96.8
ø16	Push/Pull	-	43.2	64.8	86.4	1.08×10^2	1.30×10^2	1.51×10^2
ø20	Push/Pull	-	62.9	94.4	1.26×10^2	1.57×10^2	1.89×10^2	2.20×10^2
ø25	Push/Pull	54.2	1.08×10^2	1.63×10^2	2.17×10^2	2.71×10^2	3.25×10^2	3.80×10^2

Internal structure and parts list

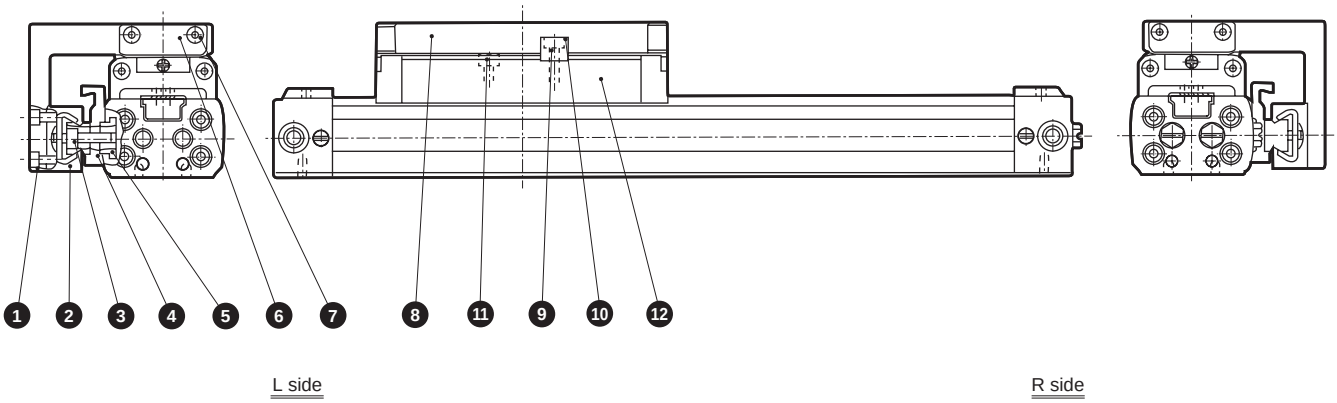

No.	Part name	Material	Remarks	No.	Part name	Material	Remarks
1	Hexagon socket head cap screw	Alloy steel	Black finish	7	Hexagon socket head cap screw	Alloy steel	Zinc chromate
2	High precision guide	Stainless steel		8	Connection plate	Aluminum alloy	Alumite
3	Hexagon socket head cap screw	Alloy steel	Black finish	9	Key	Steel	Black finish
4	Guide holder	Aluminum alloy	Alumite	10	Hexagon socket head cap screw	Alloy steel	Black finish
5	Flat nut (B)	Steel	Black finish	11	Hexagon socket head cap screw	Alloy steel	Zinc chromate
6	Stopper plate	Steel	Zinc chromate	12	Table	Aluminum alloy	Alumite

Note: The cylinder part internal structure is the same as the rodless cylinder SRL3 Series.
Refer to page 1579.

Repair parts list

Bore size (mm)	Kit No.	Repair parts No.
ø12 or equiv.	SRL3-12K-*	The repair parts are the same as those of the rodless cylinder SRL3 Series. Refer to page 1579.
ø16 or equiv.	SRL3-16K-*	
ø20 or equiv.	SRL3-20K-*	
ø25 or equiv.	SRL3-25K-*	

*1: Specify the kit No. when placing an order. Specify the stroke for *.

Internal structure and parts list

● Full stroke adjustable with shock absorber

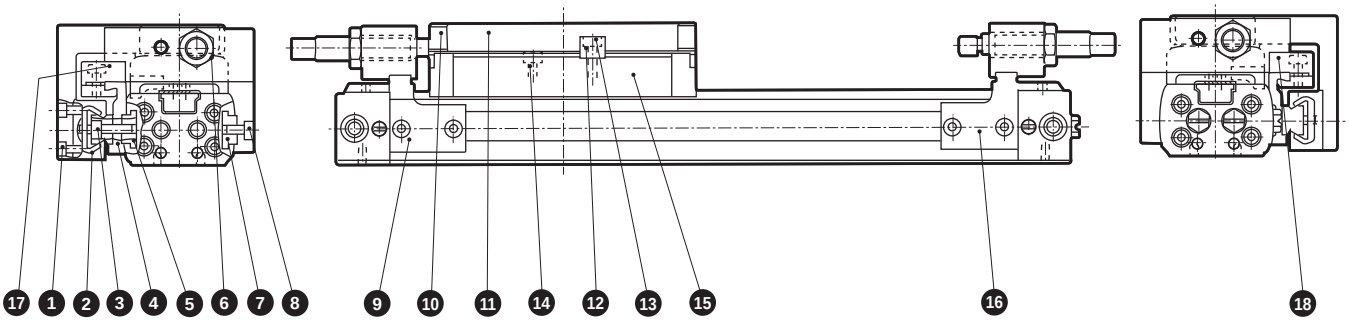

L side

R side

No.	Part name	Material	Remarks	No.	Part name	Material	Remarks
1	Hexagon socket head cap screw	Alloy steel	Black finish	10	Stopper plate	Steel	Zinc chromate
2	High precision guide	Stainless steel		11	Connection plate	Aluminum alloy	Alumite
3	Hexagon socket head cap screw	Alloy steel	Black finish	12	Key	Steel	Black finish
4	Guide holder	Aluminum alloy	Alumite	13	Hexagon socket head cap screw	Alloy steel	Black finish
5	Flat nut (B)	Steel	Black finish	14	Hexagon socket head cap screw	Alloy steel	Zinc chromate
6	Hexagon nut	Steel	Zinc chromate	15	Table	Aluminum alloy	Alumite
7	Flat nut	Alloy steel	Black finish	16	Adaptor (L)	Steel	Zinc chromate
8	Hexagon socket head cap screw	Alloy steel	Zinc chromate	17	Adaptor (LG)	Steel	Zinc chromate
9	Adaptor (R)	Steel	Zinc chromate	18	Adaptor (RG)	Steel	Zinc chromate

SCP*3
CMK2
CMA2
SCM
SCG
SCA2
SCS2
CKV2
CAV2/COVP/N2
SSD2
SSG
SSD
CAT
MDC2
MVC
SMG
MSD/MSDG
FC*
STK
SRL3
SRG3
SRM3
SRT3
MRL2
MRG2
SM-25
ShkAbs
FJ
FK
Spd Contr
Ending

Dimensions

● With cylinder switch SRG3-**-**-***-M*V* (L-shaped lead wire)

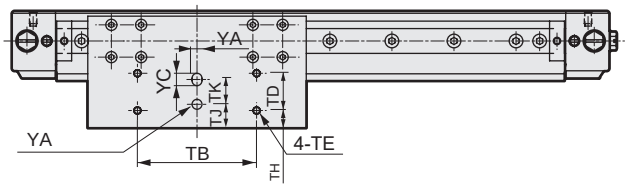

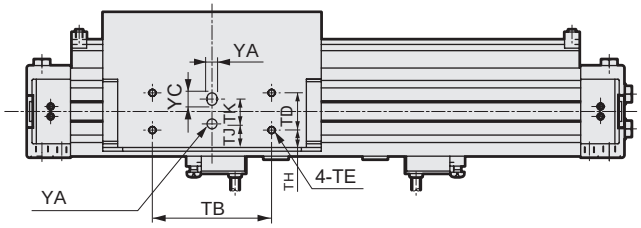

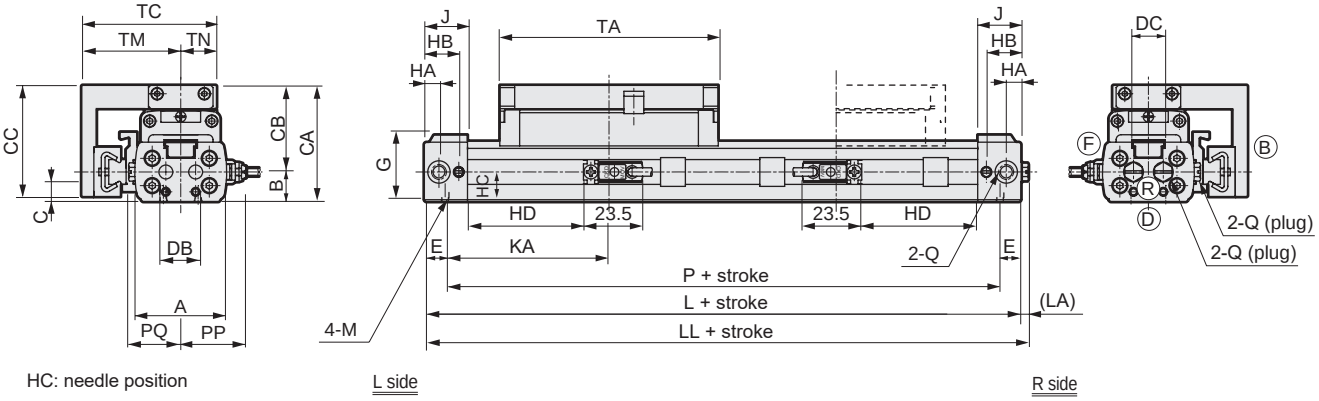

HC: needle position

● Bottom piping (option code: D)
Bottom piping is only for ø25 or equiv.

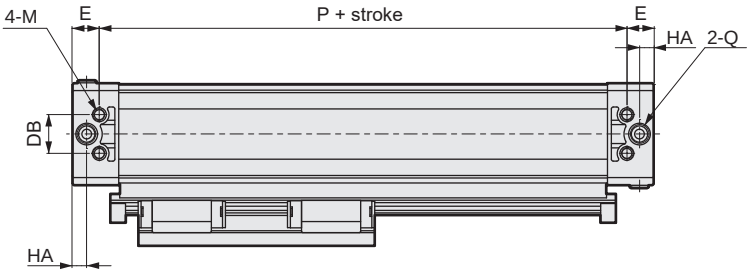

● With cylinder switch SRG3-**-**-***-M*H* (straight lead wire)

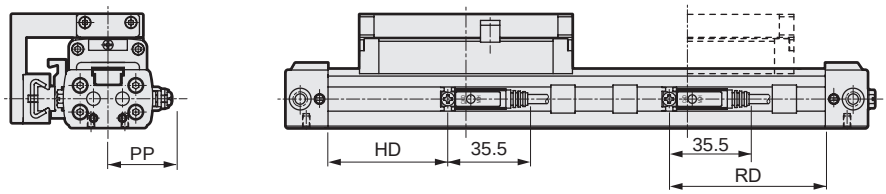

Code / Bore size (mm)	A	B	CA	CB	CC	DB	DC	E	G	HA	HB	HC	J	KA	L	LL	LA	M	P	PQ	Q	TA	TB	TC
ø12 or equiv.	33	10.5	43	32.5	40.5	10	11	8.5	24	6	14	10.5	17.5	59.5	136	139	3	M3 depth 5	119	19	M5	81	42	49
ø16 or equiv.	37	12	47	35	45	14	12	8.5	27	6	14	12	17.5	66	149	152	3	M3 depth 5	132	21	M5	88	48	54.5
ø20 or equiv.	44	14	54	40	50	16	16	10.5	31	8.5	18.5	14	22	74	169	171.5	2.5	M4 depth 6.5	148	24.5	Rc1/8	100	60	61.5
ø25 or equiv.	53	17	67	50	63.5	20	26	14	40.5	7.5	20	18.9	24	81	190	192	2	M6 depth 9	162	—	Rc1/8	122	70	80

Note: Refer to the table on the right as well.

Dimensions

● With cylinder switch SRG3-**-**-***-T*H (T*W, T*Y, T2YD)

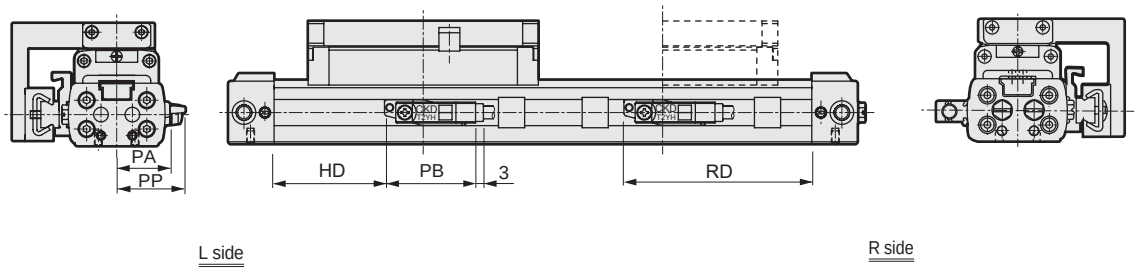

● With cylinder switch SRG3-**-**-***-T*V (T*W, T*Y)

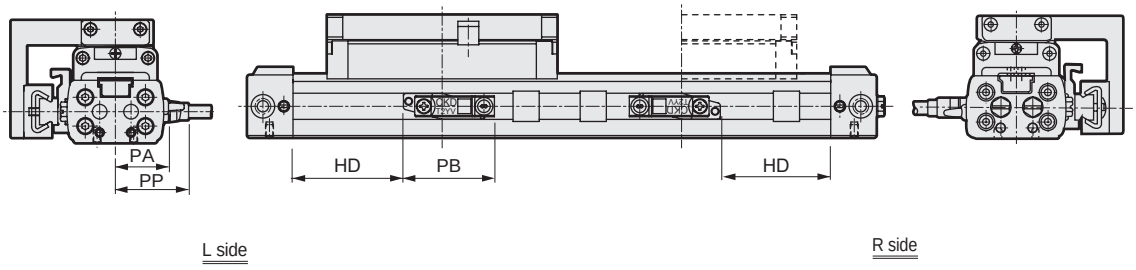

● With foot bracket SRG3-LB-**-***

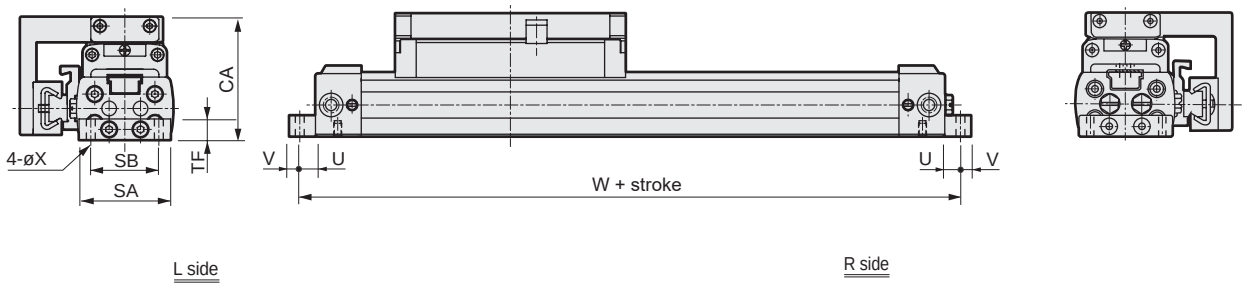

Code / Bore size (mm)	TD	TE	TH	TJ	TK	TM	TN	YA	YC	With foot bracket (LB)						
										SA	SB	TF	U	V	W	X
ø12 or equiv.	13	M3 depth 5	6.5	8	10	36	13	4 $^{+0.07}_{+0.02}$ depth 4	5	32	24	8	6	4	148	3.4
ø16 or equiv.	15	M3 depth 6	7	9.5	10	40	14.5	4 $^{+0.07}_{+0.02}$ depth 4	5	35	26	8	6	4	161	3.4
ø20 or equiv.	18	M4 depth 6	8.5	10	15	44	17.5	6 $^{+0.07}_{+0.02}$ depth 6	7	43	33	10	6	6	181	4.5
ø25 or equiv.	20	M5 depth 8	12	14.5	15	58	22	6 $^{+0.07}_{+0.02}$ depth 6	7	52	20	12	9	11	208	7

Code / Bore size (mm)	With switch																
	HD			RD			PA	PB			PP						
	M*	T*Y*	T*W	M*	T*Y*	T*W		T*Y*	T2YD	T*W*	M*V	M*H	T*YV	T*YH	T2YD	T*WV	T*WH
ø12 or equiv.	40.5	36	32	60.5	65	69	24.3	35	34	33.5	23	24.5	26	23	28.4	20.7	17.2
ø16 or equiv.	47	42	38	67	72	76	26.3	35	34	33.5	25	26.5	28	25	30.4	22.7	19.2
ø20 or equiv.	52.5	48	44	72.5	77	81	29.3	35	34	33.5	28	29.5	31	28	33.4	25.7	22.2
ø25 or equiv.	60	56	52	82	86	90	34.3	35	34	33.5	33	34.5	36	33	38.4	30.7	27.2

Note: Refer to the table on the left as well.

SCP*3
CMK2
CMA2
SCM
SCG
SCA2
SCS2
CKV2
CAV2/ COVP/N2
SSD2
SSG
SSD
CAT
MDC2
MVC
SMG
MSD/ MSDG
FC*
STK
SRL3
SRG3
SRM3
SRT3
MRL2
MRG2
SM-25
ShkAbs
FJ
FK
Spd Contr
Ending

Dimensions

● With foot bracket SRG3-LB1-**-***

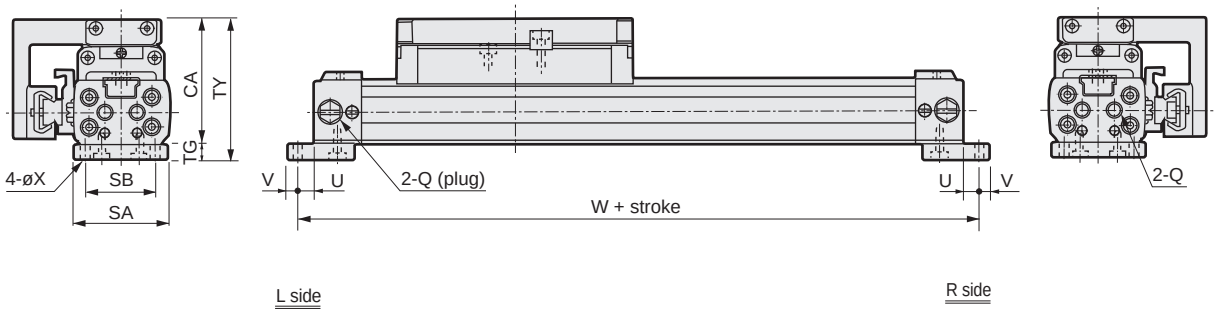

Code	With foot bracket (LB1)									
Bore size (mm)	Q	SA	SB	TG	TY	CA	U	V	W	X
ø12 or equiv.	M5	32	24	6	49	43	6	4	148	3.4
ø16 or equiv.	M5	35	26	6	53	47	6	4	161	3.4
ø20 or equiv.	Rc1/8	43	33	8	62	54	6	6	181	4.5
ø25 or equiv.	Rc1/8	50	20	10	77	67	9	11	208	7

Dimensions: With option

● Full stroke adjustable with shock absorber (SRG3)

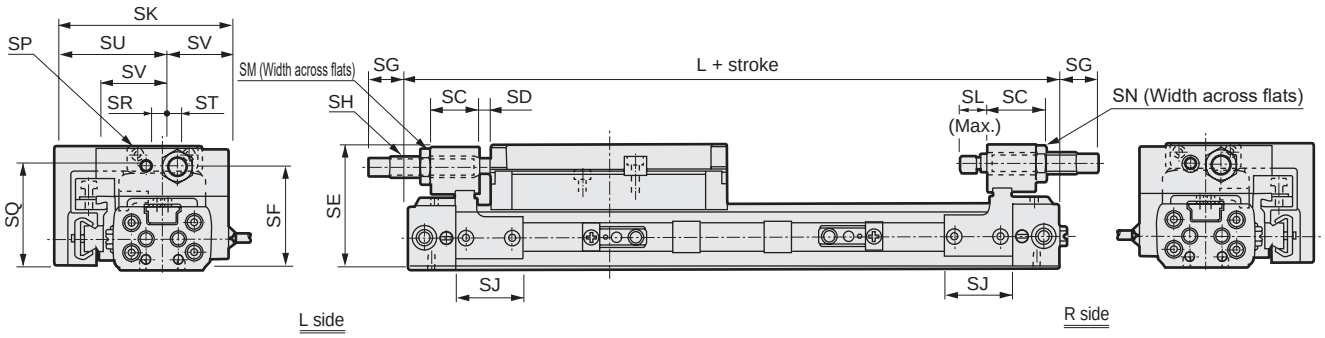

Code	SC	SD	SE	SF	SG			SH		SJ	SK	SL	SM	SN	SP	SQ	SR	ST	SU	SV
Bore size (mm)					At max.	At min.	Adjusting range	O.D. thread	Max. absorbed energy(J)											
ø12 or equiv.	19.5	2.5	42	35	17.5	7.5	10	M8x0.75	3	25	58.5	8.5	12	7	M4	35.5	6	3	36	22.5
ø16 or equiv.	18	4	46	39	14.5	4.5	10	M8x0.75	3	25	64.5	10	12	7	M4	40	6	4	40	24.5
ø20 or equiv.	22.5	3.5	53	45	14.5	4.5	10	M10x1.0	7	39	72.5	11.5	14	8	M5	48	8	5	44	28.5
ø25 or equiv.	20	2.5	65.5	54.5	14.5	4.5	10	M12x1.0	12	50	96.5	11.5	17	10	M6	56	12	10	58	38.5

Full stroke adjusting bracket kit

● Both-side full stroke adjusting bracket kit

SRG3 - 25 - A

Bore size
(Item Ⓑ on page 1652)

[ø12 to ø20]

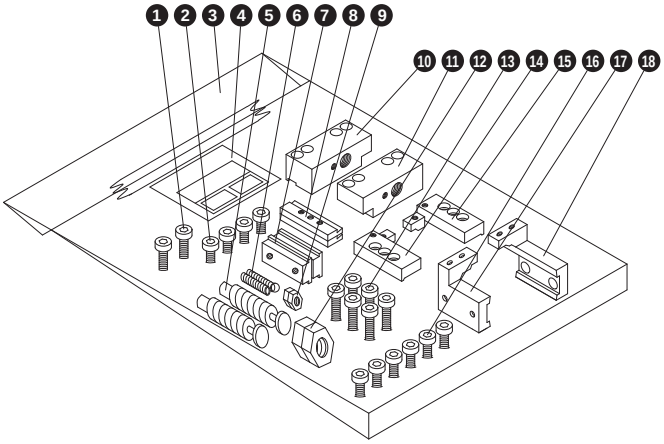

[ø25]

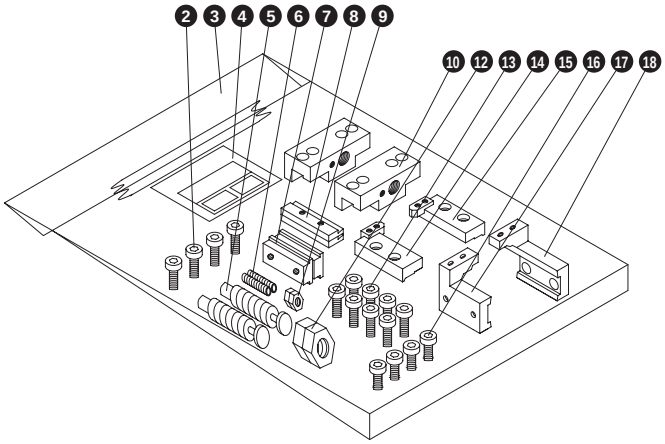

No.	Part name	Quantity
1	Hexagon socket head cap screw	ø12 to ø20:2 ø25:-
2	Hexagon socket head cap screw	4
3	Plastic bag	1
4	Package label	1
5	Shock absorber	2
6	Hexagon socket set screw	2
7	Flat nut	2
8	Adaptor nut	2
9	Hexagon nut	2
10	ø12 to ø20: Plate (R) ø25: Plate	ø12 to ø20:1 ø25:2
11	Plate (L)	ø12 to ø20:1 ø25:-
12	Hexagon nut	2
13	Hexagon socket head cap screw	ø12 to ø20:6 ø25:8
14	Adaptor (RG)	1
15	Adaptor (LG)	1
16	Hexagon socket head cap screw	ø12 to ø20:6 ø25:4
17	Adaptor (R)	1
18	Adaptor (L)	1

SCP*3
CMK2
CMA2
SCM
SCG
SCA2
SCS2
CKV2
CAV2/COVP/N2
SSD2
SSG
SSD
CAT
MDC2
MVC
SMG
MSD/MSDG
FC*
STK
SRL3
SRG3
SRM3
SRT3
MRL2
MRG2
SM-25
ShkAbs
FJ
FK
Spd Contr
Ending

Full stroke adjusting bracket kit

● R side full stroke adjusting bracket kit

SRG3 - 25 - A1

Bore size
(Item Ⓑ on page 1652)

[ø12 to ø20]

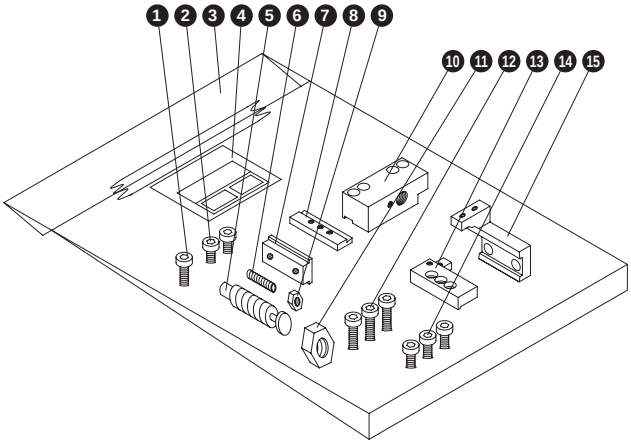

[ø25]

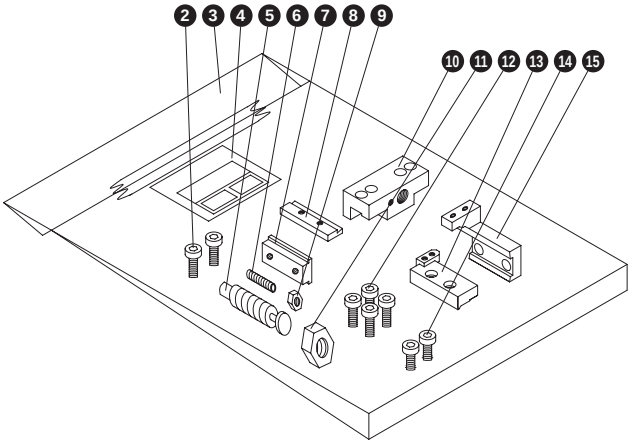

No.	Part name	Quantity
1	Hexagon socket head cap screw	ø12 to ø20:1 ø25:-
2	Hexagon socket head cap screw	2
3	Plastic bag	1
4	Package label	1
5	Shock absorber	1
6	Hexagon socket set screw	1
7	Flat nut	1
8	Adaptor nut	1

No.	Part name	Quantity
9	Hexagon nut	1
10	ø12 to ø20: Plate (R) ø25: Plate	1
11	Hexagon nut	1
12	Hexagon socket head cap screw	ø12 to ø20:3 ø25:4
13	Adaptor (RG)	1
14	Hexagon socket head cap screw	ø12 to ø20:3 ø25:2
15	Adaptor (L)	1

● L side full stroke adjusting bracket kit

SRG3 - 25 - A2

Bore size
(Item Ⓑ on page 1652)

[ø12 to ø20]

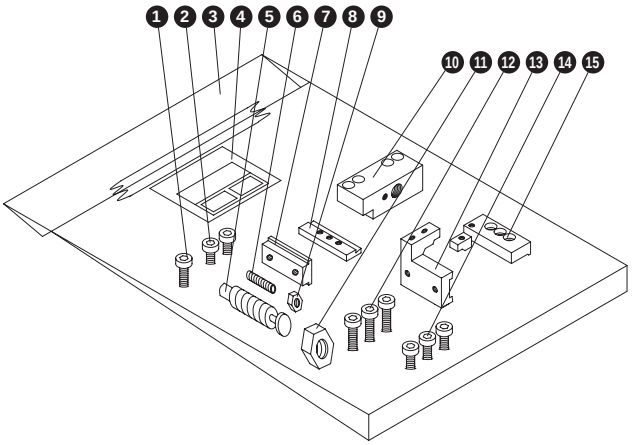

[ø25]

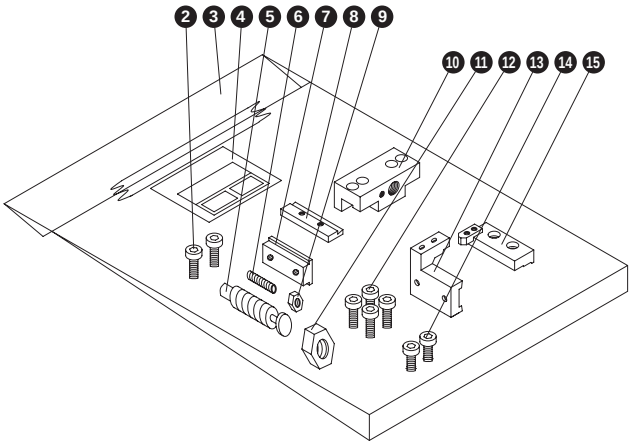

No.	Part name	Quantity
1	Hexagon socket head cap screw	ø12 to ø20:1 ø25:-
2	Hexagon socket head cap screw	2
3	Plastic bag	1
4	Package label	1
5	Shock absorber	1
6	Hexagon socket set screw	1
7	Flat nut	1
8	Adaptor nut	1

No.	Part name	Quantity
9	Hexagon nut	1
10	ø12 to ø20: Plate (L) ø25: Plate	1
11	Hexagon nut	1
12	Hexagon socket head cap screw	ø12 to ø20:3 ø25:4
13	Adaptor (LG)	1
14	Hexagon socket head cap screw	ø12 to ø20:3 ø25:2
15	Adaptor (R)	1

Parts kit weight list

Full stroke adjusting kit

● Both side full stroke adjusting bracket kit

Kit No.	Kit weight (g)
SRG3-12-A	244
SRG3-16-A	261
SRG3-20-A	405
SRG3-25-A	813

● R side full stroke adjusting bracket kit

Kit No.	Kit weight (g)
SRG3-12-A1	122
SRG3-16-A1	131
SRG3-20-A1	202
SRG3-25-A1	406

● L side full stroke adjusting bracket kit

Kit No.	Kit weight (g)
SRG3-12-A2	122
SRG3-16-A2	130
SRG3-20-A2	403
SRG3-25-A2	407

The other parts kits are the same as those of SRL3 Series.
Refer to SRL3 Series on pages 1627 and 1628.

SCP*3
CMK2
CMA2
SCM
SCG
SCA2
SCS2
CKV2
CAV2/ COVP/N2
SSD2
SSG
SSD
CAT
MDC2
MVC
SMG
MSD/ MSDG
FC*
STK
SRL3
SRG3
SRM3
SRT3
MRL2
MRG2
SM-25
ShkAbs
FJ
FK
Spd Contr
Ending

SRG3 Series selection guide

As the selection conditions are different from those of general air cylinders, confirm whether the model is adequate or not according to the selection guide.

1 Step 1

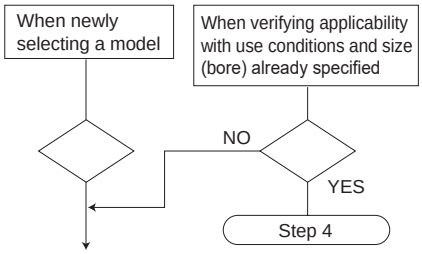

2 Step 2 Confirming working conditions

1. Working pressure (P) (MPa)
2. Load weight (M) (kg)
3. Applied load (F_L) (N)
4. Mounting orientation
5. Stroke (L) (mm)
6. Travel time (t) (s)
7. Operation speed (V) (m/s)

Formula of the cylinder's average operation speed V

$$V = \frac{L}{t} \times \frac{1}{1000} \text{ (m/s)}$$

[Load weight]

Value of (weight of transported object + jig weight)

[Mounting orientation]

Operating direction: Horizontal + vertical

Mounting direction: With table upward, with table downward

3 Step 3 Selection of approximate size of cylinder

● Formula for calculating cylinder size (bore size)

$$F = \frac{\pi}{4} \times D^2 \times P \times \frac{a}{100} \text{ (N)}$$

$$\therefore D = \sqrt{\frac{4F}{\pi \cdot P \cdot a}} \text{ (mm)}$$

D: Cylinder bore size (mm)
P: Working pressure (MPa)
a: Thrust efficiency (%) (Refer to Fig. 1)
F: Cylinder theoretical thrust (N)

D= ø

Figure 1 Trends of thrust efficiency of SRG3

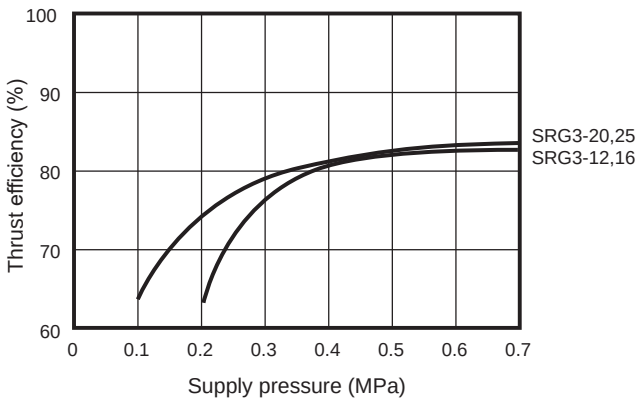

● When calculating from the theoretical thrust value in Table 1

Approximate required thrust ≥ Applied load x 2

("x 2" in "Applied load x 2" is for when the load factor is approx. 50% as a safety coefficient)

(Example) Working pressure 0.5 MPa
Applied load 5 N
* Required thrust is 5 (N) x 2 = 10 N

The bore size selected from Table 1 with theoretical thrust of 10 N and over at working pressure of 0.5 MPa will be ø12.

D= ø12

[Cylinder theoretical thrust]

Table 1 Cylinder theoretical thrust value

Unit: N

Bore size (mm)	Pressurized area (mm²)	Working pressure MPa						
		0.1	0.2	0.3	0.4	0.5	0.6	0.7
ø12 or equiv.	138	-	28	41	55	69	83	97
ø16 or equiv.	216	-	43	65	86	108	130	151
ø20 or equiv.	315	-	63	94	126	157	189	220
ø25 or equiv.	542	54	108	163	217	271	325	380

Note: Values in Table 1 do not include thrust efficiency.

4 Step 4 Calculation of load (W) and moments

Vertical load and static moment work according to the cylinder mounting direction and the position of center of gravity of load.

[Vertical load]

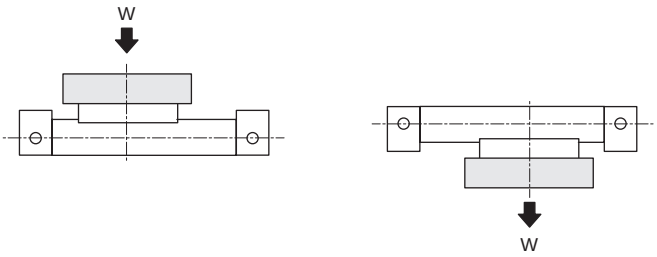

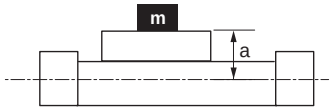

Value of a

Bore size	a(m)
ø25 or equiv.	0.033
ø32 or equiv.	0.035
ø40 or equiv.	0.040
ø63 or equiv.	0.050

[Static moment]

● Types of moment caused by load

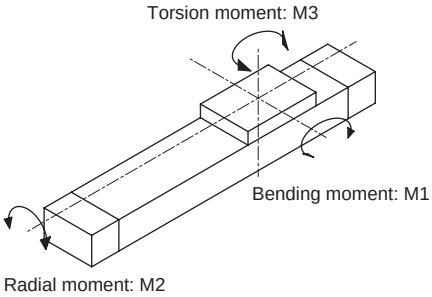

Unit: N·m

Mounting orientation		Horizontal upward	Horizontal downward	Horizontal lateral	Vertical
Vertical load W		mx9.8			-
Static moment	M1	$W \times \ell_1$	$W \times \ell_1$	-	$W \times (\ell_3 + a)$
	M2	$W \times \ell_2$	$W \times \ell_2$	$W \times (\ell_3 + a)$	-
	M3	-	-	$W \times \ell_1$	$W \times \ell_2$

m : Load weight [kg]
ℓ_1 : Length along the stroke direction from the center of table to the center of gravity of load [m]
ℓ_2 : Length in the width direction from the center of table to the center of gravity of load [m]
ℓ_3 : Length in the vertical direction from the center of table to the center of gravity of load [m]

Horizontal upward

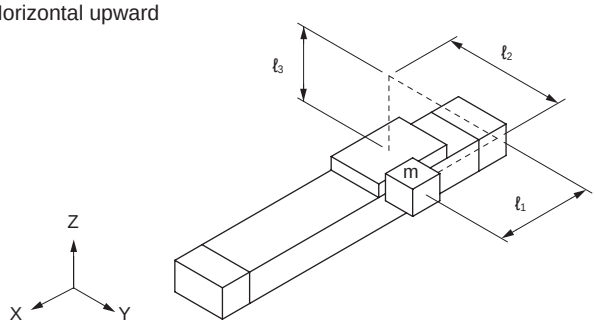

Horizontal downward

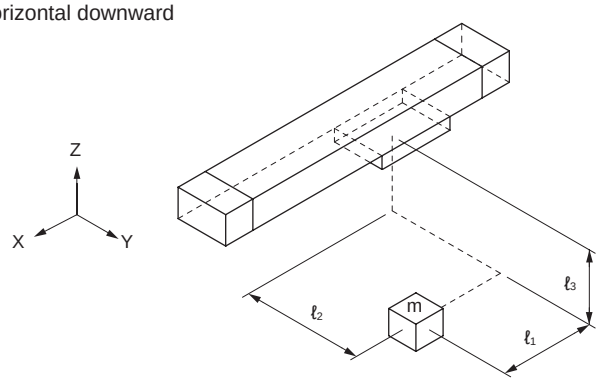

Horizontal lateral

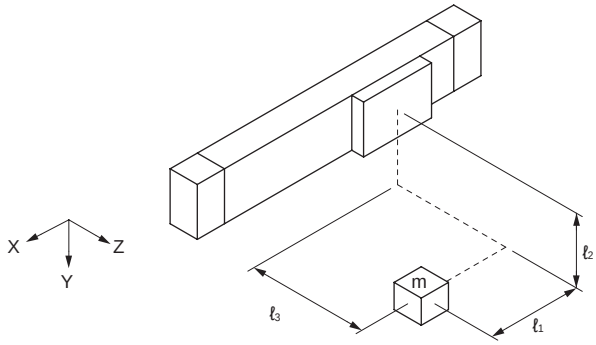

Vertical

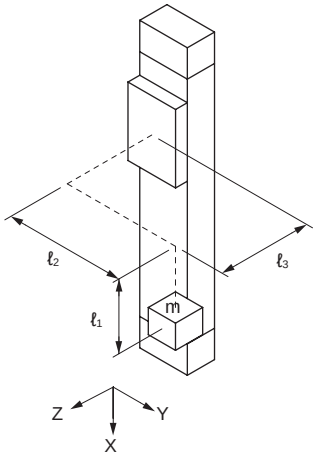

5 Step 5 Calculation of load and resultant moment

● Divide each load by the value shown in Table 2 to find load/moment ratio, and confirm that the total value is 1.0 or less.

● Formula

$$\frac{W}{Wmax} + \frac{M1}{M1max} + \frac{M2}{M2max} + \frac{M3}{M3max} \leq 1.0$$

Table 2 Applied loads/allowable moments

Item / Bore size (mm)	Vertical load W(N)	Bending moment M1 (N·m)	Radial moment M2 (N·m)	Torsion moment M3 (N·m)
ø12 or equiv.	20	1	0.5	3
ø16 or equiv.	40	2.5	1	5.5
ø20 or equiv.	40	2.5	1	5.5
ø25 or equiv.	90	6.5	2.5	17

● If the total value is more than 1.0,

1. Review the load
2. Use a cylinder with wider bore size, etc., for revision.

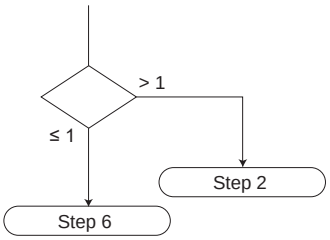

6 Step 6 Calculation of required thrust

● Calculate the required cylinder thrust (F_N) that satisfies the conditions of the moments.

1. For horizontal operation

$F_N = F_W + F_{M1} + F_{M2} + F_{M3} + F_L$ (N)

$F_W = W \times 0.2$ (N)

$F_{M1} = M1 \times C1$ (N)

$F_{M2} = M2 \times C2$ (N)

$F_{M3} = M3 \times C3$ (N)

F_L: Applied load (N)

C1: Coefficient of friction of moment M1 (Table 3)

C2: Coefficient of friction of moment M2 (Table 3)

C3: Coefficient of friction of moment M3 (Table 3)

2. For vertical operation

$F_N = W + F_{M1} + F_{M3} + F_L$ (N)

$F_N =$ ☐ (N)

[Moment friction coefficients]

● The friction differs depending on the moment. Calculate the friction of each moment from Table 3.

Table 3 Coefficients of friction of moments

1/m

Bore size (mm)	C1	C2	C3
ø12 or equiv.	8	27	8
ø16 or equiv.	7	24	7
ø20 or equiv.	6	21	6
ø25 or equiv.	5	16	5

7 Step 7 Calculation of load factor

● Determine the load factor by taking into account the status of utilization such as stability, margin and service life of the cylinder.

● Formula of load factor (α)

$$\alpha = \frac{\text{Required thrust } (F_N)}{\text{Thrust of cylinder } (F)} \times 100\%$$

$$F = \frac{\pi}{4} \times D^2 \times P \times \frac{\mu}{100} \text{ (N)}$$

D: Cylinder bore size (mm)

$\frac{\pi}{4} \times D^2$ = Pressurized area (mm^2)

● The cylinder theoretical thrust value in Table 1 can be used as the $\frac{\pi}{4} \times D^2 \times P$ value.

P : Working pressure MPa

μ : Thrust efficiency (Use the values in Figure 1.)

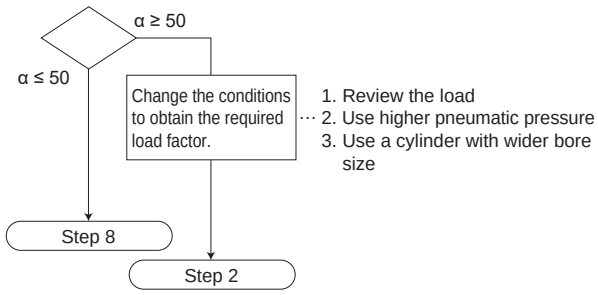

[Appropriate range of load factor]

● The piston speed differs depending on the load factor. In normal use, the values in Table 4 are recommended.

Table 4 (Appropriate range of load factor - reference value)

Working pressure MPa	Load factor (%)
0.2 to 0.3	α ≤ 40
0.3 to 0.6	α ≤ 50
0.6 to 0.7	α ≤ 60

[Example] Size of the cylinder used: ø12 or equiv.

Required thrust 1.78(N)

Working pressure 0.5 (MPa)

$$\alpha = \frac{1.78}{138 \times 0.5 \times \frac{82}{100}} \times 100$$

= 3.1%

Appropriate since the result is α ≤ 50%.

8 Step 8 Confirming cushion capacity

Check if the kinetic energy generated by an actual load can be absorbed by the cylinder cushion.

[Allowable absorbed energy of cylinder: E_1]

● The kinetic energy absorption performance of the cylinder's cushion depends on the cylinder bore size. The values of SRG3 are shown in Table 5.

Table 5 SRG3 allowable absorbed energy (E_1)

Bore size (mm)	Allowable absorbed energy (J)
ø12 or equiv.	0.03
ø16 or equiv.	0.22
ø20 or equiv.	0.59
ø25 or equiv.	1.40

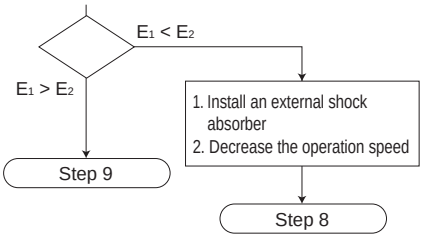

[Piston kinetic energy: E_2]

● Formula for calculating the piston kinetic energy

$$E_2 = \frac{1}{2} \times M \times Va^2 \text{ (J)}$$

M: Applied load weight (kg)

Va: Speed of the piston entering the cushion (m/s)

$$Va = \frac{L}{t} \times \left(1 + 1.5 \times \frac{\alpha}{100}\right)$$

L : Stroke (m)

t : Operating time (s)

α : Load factor (%)

SCP*3
CMK2
CMA2
SCM
SCG
SCA2
SCS2
CKV2
CAV2/COVP/N2
SSD2
SSG
SSD
CAT
MDC2
MVC
SMG
MSD/MSDG
FC*
STK
SRL3
SRG3
SRM3
SRT3
MRL2
MRG2
SM-25
ShkAbs
FJ
FK
Spd Contr
Ending

9 Step 9 Confirmation of inertia load

● Check whether the inertia force of the load caused by the piston operation is within the allowable range of the cylinder.

(1) Obtain the G coefficient from the speed of entering the cushion (Va) and Figure 2 (Trends of inertia force coefficient for SRG3). Use the speed of entering the cushion (Va) calculated in Step 8.

Va: Speed of the piston entering the cushion (m/s)

$$Va = \frac{L}{t} \times \left(1 + 1.5 \times \frac{\alpha}{100}\right)$$

L : Stroke (mm)
t : Operating time (S)
α : Load factor (%)

(2) Obtain the bending moment (M1i) and torsion moment (M3i) of the inertia force.

Unit: N·m

Mounting orientation		Horizontal upward / Horizontal downward	Vertical	Horizontal lateral
Dynamic moment	M1i	$W \times (\ell_3 + a) \times G$		
	M2i	M2i dynamic moment is not generated.		
	M3i	$W \times \ell_2 \times G$		

Moment of inertia force can be calculated with the formulas above regardless of the mounting direction.

(3) Add moments of static load (M1 and M3) and moments of inertia force (M1i and M3i) and check that the resulting values are within the values in Table 2.

$$M1 + M1i \leq M1max$$
$$M3 + M3i \leq M3max$$

M1max and M3max are the values in Table 2.

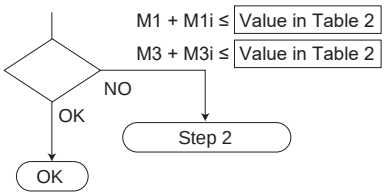

Figure 2 Trends of inertia force coefficient for SRG3

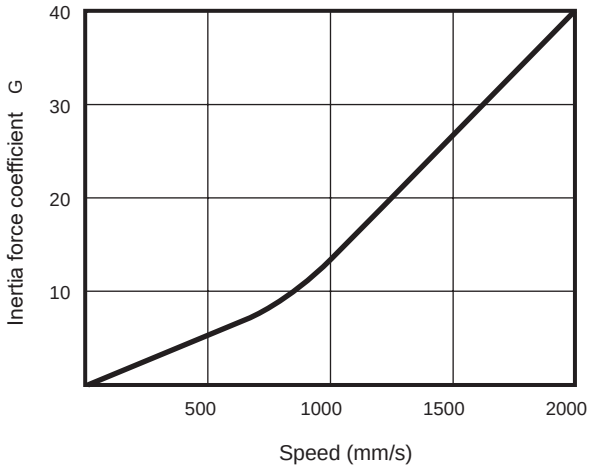

1 Sag of cylinder tube δ

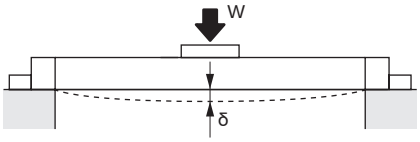

● SRG3-12

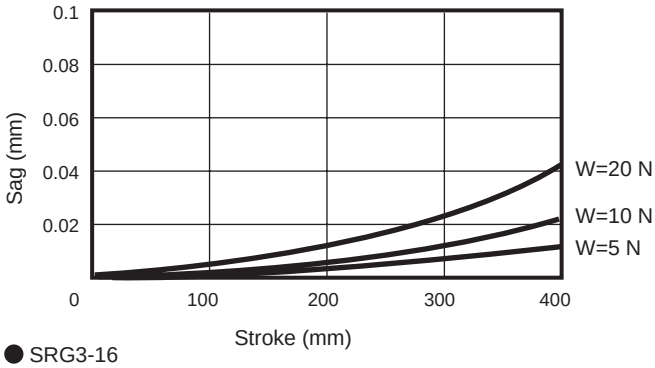

● SRG3-16

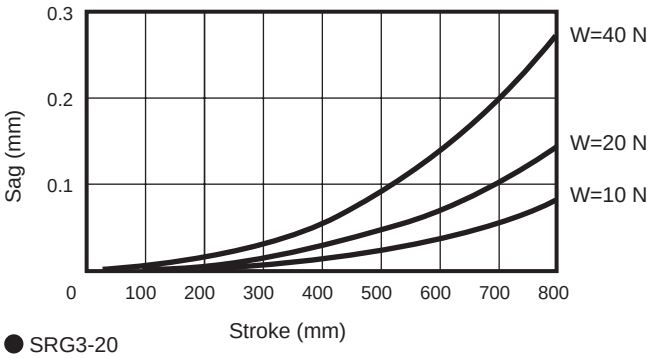

● SRG3-20

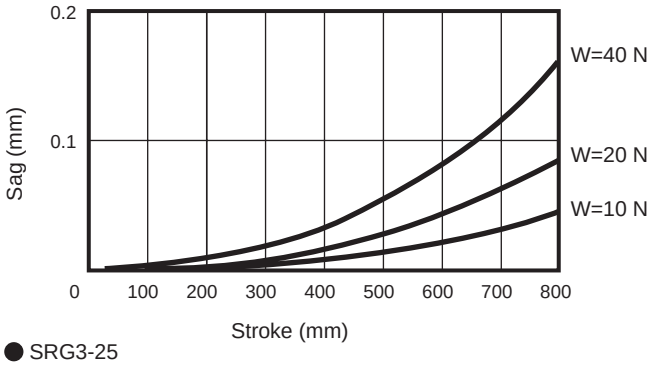

● SRG3-25

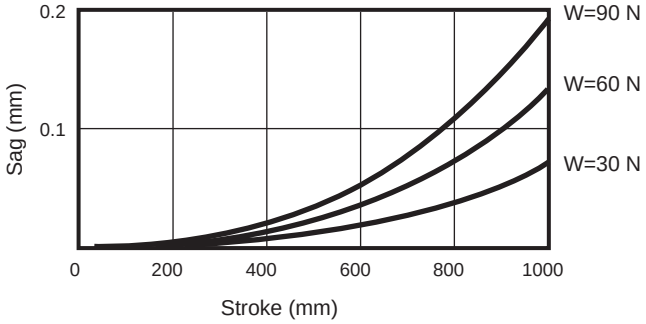

2 Runout of table (Runout at 70 mm from the center of the cylinder)

● SRG3-12

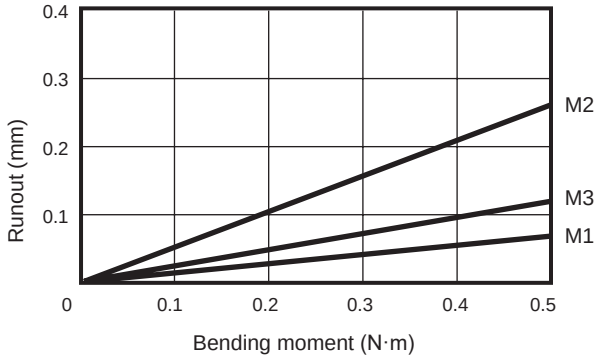

● SRG3-16

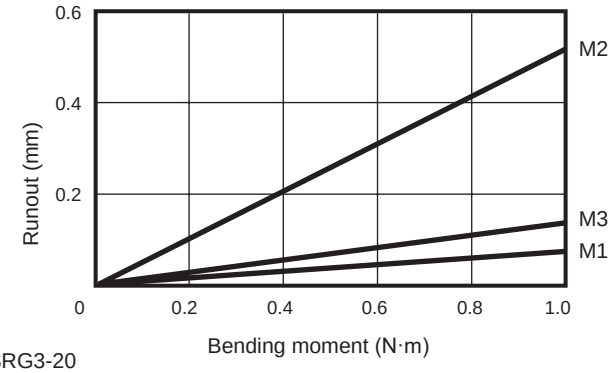

● SRG3-20

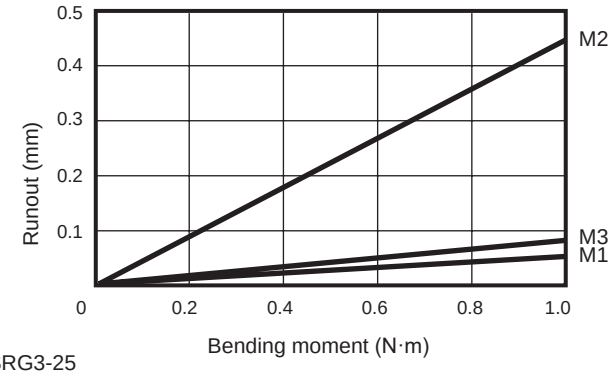

● SRG3-25

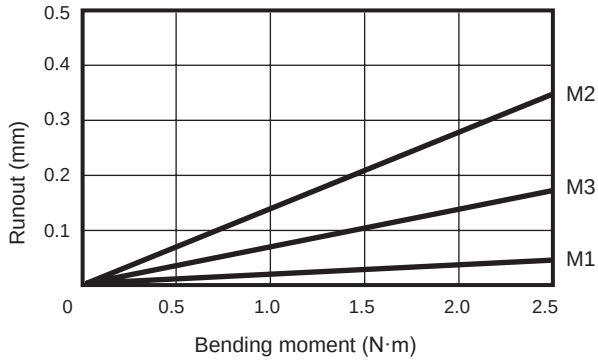

Note: This table has a vertical tilt when without load, separate from the table displacement noted above. (Refer to table below)

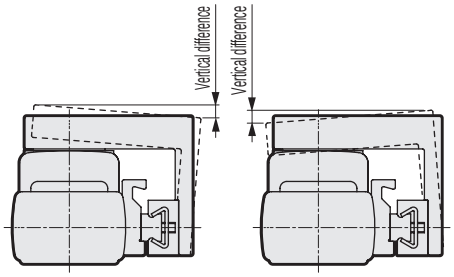

Vertical difference (reference value)

Bore size	Vertical difference (MAX)
ø12	0.9mm
ø16	1.0mm
ø20	1.1mm
ø25	1.5mm

SCP*3
CMK2
CMA2
SCM
SCG
SCA2
SCS2
CKV2
CAV2/ COVP/N2
SSD2
SSG
SSD
CAT
MDC2
MVC
SMG
MSD/ MSDG
FC*
STK
SRL3
SRG3
SRM3
SRT3
MRL2
MRG2
SM-25
ShkAbs
FJ
FK
Spd Contr
Ending

3 How to check the full stroke adjusting unit

(1)Checking the allowable colliding energy of shock absorber

Calculate the colliding object equivalent weight Me and the colliding energy E from the formula in the table below. Confirm that Me and E are within the allowable values shown in Figure 3. Also, confirm that the operating frequency, colliding speed and other specifications are within the allowable values in Table 11. Note that the allowable colliding object equivalent weight Me and allowable colliding energy E change depending on the colliding speed.

● Code

E: Colliding energy (J)
Me: Colliding object equivalent weight (kg)
m: Workpiece weight (kg)
F: Cylinder thrust (N)
V: Colliding speed (m/s)
St: Shock absorber stroke (m)
g: Gravity acceleration 9.8 $(m/s)^2$)

	Horizontal travel	Vertical down	Vertical up
Applications	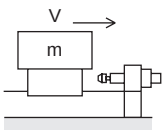	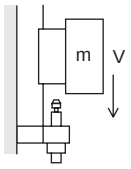	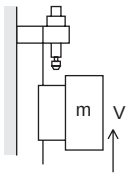
Colliding object equivalent weight Me (kg)	$Me = m + \frac{2F \cdot St}{V^2}$	$Me = m + \frac{2 \cdot St\,(F+mg)}{V^2}$	$Me = m + \frac{2 \cdot St(F-mg)}{V^2}$
Energy E (J)	$E = \frac{mV^2}{2} + F \cdot St$	$E = \frac{mV^2}{2} + (F+mg) \cdot St$	$E = \frac{mV^2}{2} + (F-mg) \cdot St$

Fig. 3 Allowable colliding object equivalent weight

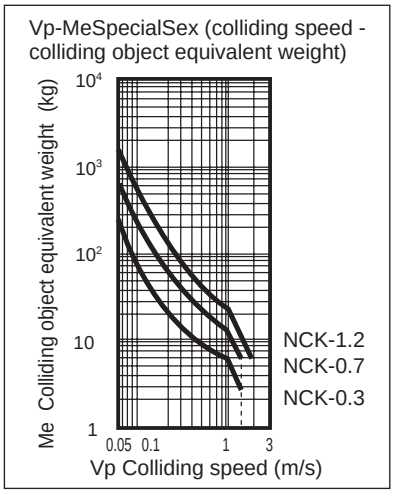

(2) Shock absorber

Table 6 Specifications

Type		For SRG3-12/16	For SRG3-20	For SRG3-25
Shock absorber model No. / Descriptions		NCK-00-0.3-C	NCK-00-0.7-C	NCK-00-1.2
Type/Classification		Spring return without adjuster		
Max. absorbed energy J		3	7	12
Stroke mm		6	8	10
Hourly Max. energy absorption kJ/hour		6.3	12.6	21.6
Max. colliding speed m/s		1.5		2.0
Max. operating frequency cycles/min.		35	30	
Ambient temperature °C		−10 to 80		
Required mounting strength N		3540	6150	8400
Return time S		0.3 or less		
Product weight kg		0.012	0.02	0.04
Return Spring force	When extended N	2.9	2.0	2.9
	When compressed N	4.5	4.3	5.9

(3) Example of calculation (SRG3-20)

● Example of calculation
Rising and lowering
Working conditions
- ● Applied load M 1 (kg)
- ● Colliding speed
  Rising 0.5 (m/s)
  Lowering 0.7 (m/s)
- ● Working pressure 0.5 (MPa)
  (157 N)

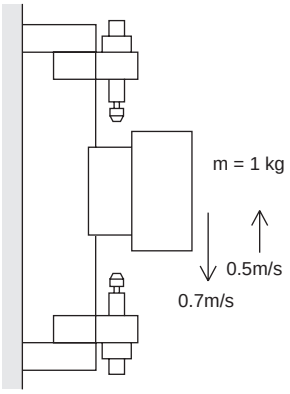

①Kinetic energy when rising (E_1)

$$E_1 = \frac{1 \times 0.5^2}{2} + (157 - 1 \times 9.8) \times 0.008$$

$= 1.30$ (J)

The kinetic energy (E_1) is less than 1/2 of the max. energy absorption in Table 12 and can be absorbed.

$$Me = 1 + \frac{2 \times 0.008(157 - 1 \times 9.8)}{0.5^2}$$

$= 10.42$ (kg)

From Figure 4, Me at V=0.5 (m/s) of the shock absorber for SRG3-20 is 18 kg.,Absorbable

②Kinetic energy when falling (E_1)

$$E_1 = \frac{1 \times 0.7^2}{2} + (157 + 1 \times 9.8) \times 0.008$$

$= 1.58$ (J)

The kinetic energy (E) is less than 1/2 of the max. energy absorption in Table 6 and$_1$)is allowable

$$Me = 1 + \frac{2 \times 0.008(157 + 1 \times 9.8)}{0.7^2}$$

$= 6.45$ (kg)

From Figure 4, Me at V = 0.7 (m/s) of the shock absorber for SRG3-20 is 16 kg. Therefore, the result is allowable.

● Example calculation (2)
Horizontal
Working conditions
Load weight M 1.5 (kg)
Colliding speed
Horizontal direction 0.5 (m/s)
Working pressure 0.3 (MPa)
(94 N)

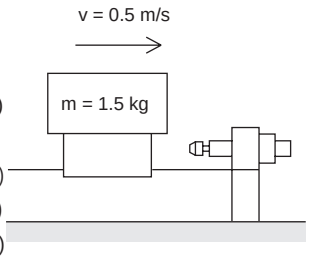

Horizontal kinetic energy (E_1)

$$E_1 = \frac{1.5 \times 0.5^2}{2} + 94 \times 0.08$$

$= 0.94$ (J)

The kinetic energy (E_1) is less than 1/2 of the max. energy absorption in Table 12 and can be absorbed.

$$Me = 1.5 + \frac{2 \times 94 \times 0.008}{0.5^2}$$

$= 1.53$ (kg)

V=0.5 from Fig. 4 (m/s)The Me value of the shock absorber for SRG3-20 at is 18kg. Therefore, 1.53 < 18 is allowable.

(Note) Refer to 9 Step 9 (Confirmation of inertia load) and keep the inertia load within the allowable value.

Safety Precautions

Be sure to read this section before use.
Refer to Intro Page 73 for general information of the cylinder, and to Intro Page 80 for general information of the cylinder switch.

Product-specific cautions: High precision guided rodless cylinder SRG3 Series

Mounting, installation and adjustment

1. Common

CAUTION

■ Pay attention when designing the brake control circuit.
A slight amount of external leakage is inherent to the structure of SRL3 and other slit rodless cylinders. Therefore, brake control using a 3-position valve with all ports closed may fail to keep the stop position of the table. Use the control circuit with both sides pressurized with 3-position P/A/B connection valve. However, note that the table may deviate from origin if air pressure is applied in the de-energized state when starting after a pressure drop.

■ Basic circuit diagram

● Horizontal load
When piping is as shown in Fig. 1, equal pressure is applied to both ends of the piston when stopped to prevent the table from popping out when operation is restarted.

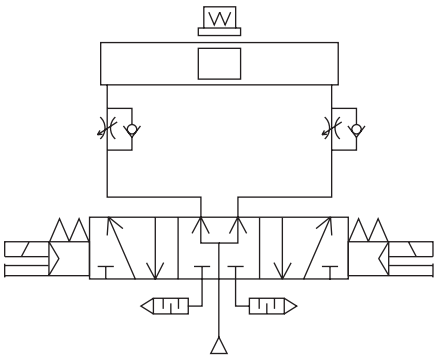

Fig. 1

● Vertical load
● If vertical load works as shown in Figure 2, the table moves in the load direction. Install a regulator with check valve on the top to reduce thrust in the load direction to balance the load.

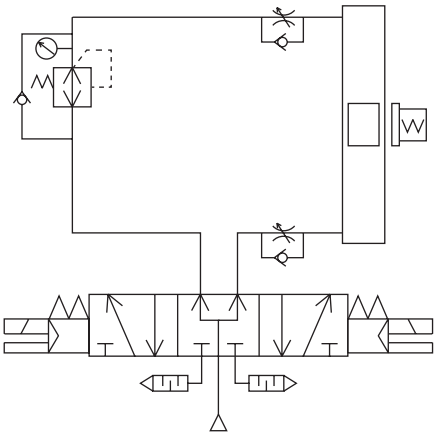

Fig. 2

■ Although the structure of SRL3 and other slit rodless cylinders has a slight amount of external air leakage, it does not affect the speed control performance.

■ Prevent negative pressure from occurring inside the cylinder tube. Using the cylinder as an air balancer or operating the table with external force or inertia force with all ports closed may cause negative pressure inside the cylinder, resulting in air leakage if the sealing belt comes off. Do not use external force or inertia force, otherwise negative pressure will occur inside the cylinder.

WARNING

■ How to adjust the stroke adjusting unit

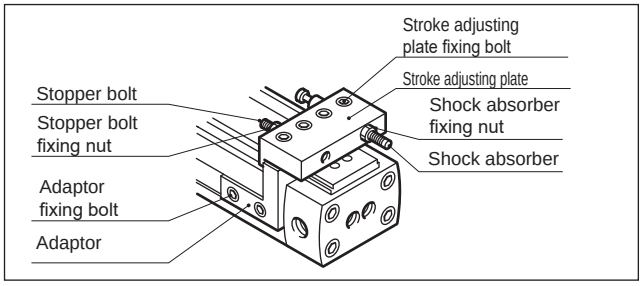

(1) Moving the stroke adjusting unit
● Loosen the adaptor fixing bolt and the stroke adjusting plate fixing bolt to move the stroke adjusting unit.

(2) Fixing the stroke adjusting unit
● After moving the stroke adjusting unit to the desired position, tighten the adaptor fixing bolt and the stroke adjusting plate fixing bolt with the value in Table 1 to fix the unit. Note that if tightened with a value less than that in the table below, the stroke adjusting unit may be displaced.

Table 1 Tightening torque of adaptor fixing bolt and stroke adjusting plate fixing bolt

Tightening torque / Model	Adaptor fixing bolt (N·m)	Stroke adjusting plate fixing bolt (N·m)
SRG3-12/16	1.0 to 1.2	0.5 to 0.7
SRG3-20	2.5 to 2.7	
SRG3-25	5.2 to 5.6	2.5 to 2.7

(3) Adjusting the stroke with a stopper bolt
● In the case of ø12 to ø20, adjust the stroke normally by moving the stroke adjusting unit, since there is a danger that fingers may be caught in a narrow space between the table and the stroke adjusting plate. To adjust the stroke, loosen the stopper bolt fixing nut and turn the stopper bolt. After adjustment, tighten the stopper bolt fixing nut with the value in Table 2 to fix the stopper bolt.

Table 2 Tightening torque of stopper bolt fixing nut and shock absorber fixing nut

Tightening torque / Model	Stopper bolt fixing nut (N·m)	Shock absorber fixing nut (N·m)
SRG3-12/16	1.1 to 1.2	1.3 to 1.8
SRG3-20	2.5 to 2.7	2.9 to 3.9
SRG3-25	8.8 to 9.5	4.5 to 6.0

(4) Adjusting the shock absorber

- With standard shock absorber
  Change the operational stroke of the shock absorber to adjust its absorbed energy.
  To adjust the operational stroke of the shock absorber, loosen the shock absorber fixing nut and turn the shock absorber. After adjustment, tighten the shock absorber fixing nut with the value in Table 2 to fix the shock absorber.
  Because the gap between the shock absorber and the stopper bolt is narrow, it is recommended to remove the stroke adjusting plate for adjustment.

(5) Precautions for use

- A shock absorber can absorb the rated energy at the rated stroke. However, the initial shock absorber installation position is adjusted to have a stroke allowance at the cylinder's stroke end. Therefore, the absorbed energy will be less than the allowable absorbed energy of a discrete shock absorber. If the rated absorbed energy is required, adjust the shock absorber so that the full stroke can be used. At the time, adjust so that the table stops with the stopper bolt. Even at the cylinder stroke end, if the cylinder's thrust is continuously applied, the shock absorber may be damaged.

Fig. 1

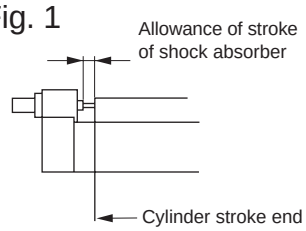

Fig. 2

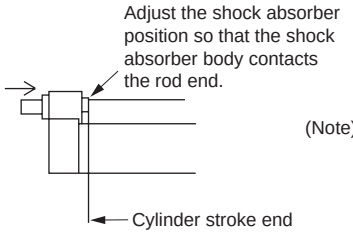

(Note) This explanation applies to the shock absorber supplied with the full stroke adjustable.

- The absorbed energy changes depending on the colliding speed. Keep it within 1/2 of the max. energy absorption in Table 3 at 1000 mm/s colliding speed.

Table 3 Specifications of full stroke adjustable with shock absorber (initial set point)

Type	Absorbed energy (J)	Effective stroke (mm)
For SRG3-12/16	2.4	5.5
For SRG3-20	5.7	7
For SRG3-25	10	8

■ Do not perform electric welding after installing the rodless cylinder.
Otherwise electric current passes into the cylinder and causes sparks between the dust-proof belt and cylinder tube, which will damage the dust-proof belt.

■ The cylinder body may be damaged or may malfunction if a unit with excessive inertia, etc., is moved. Use within the allowable range.

■ Do not apply strong impact or excessive moment to the table.

■ Carefully match the centers when connecting a load with an external guide mechanism.

- Displacement of the shaft center increases as the stroke becomes longer. Consider the connection method (floating) so that the displacement can be absorbed.

■ Keep moment, including inertia force caused by load transfer or stop, within the allowable load. Damage will occur if this value is exceeded.

(When the overhang load is large)

- When the overhang load is large and the cylinder is stopped at both ends by the piston, load inertia causes bending moment even if the energy is within the allowable absorbed energy of the internal cushion.
  If the kinetic energy is large and an external cushion is used, adjust so that the cylinder contacts with the center of gravity of workpiece or the closest point to it.

(When an external stopper is used)

- When using an external stopper, make a selection considering bending moment due to the cylinder thrust.

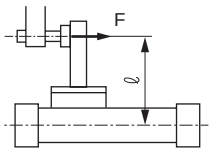

$M1 = F \cdot \ell$

F: Cylinder thrust
ℓ: Length from the center of the cylinder to the stopper

■ Using common port piping

- Piping fittings compatible with the common ports (options R and T) are limited. Select an appropriate one from Table 4.

Table 4

Mounting / Bore size (mm)	Applicable fitting O.D. øC		
	00	LB	LB1
ø12 or equiv.	11 or less	Common port piping is not available	11 or less
ø16 or equiv.	12 or less		12 or less
ø20 or equiv.	16 or less		16 or less
ø25 or equiv.	26 or less		26 or less

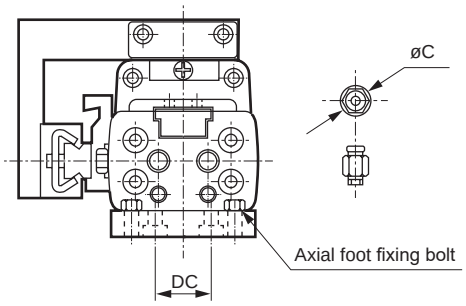

- In the case of the axial foot (LB1) mounting with option R or T, the piping fitting interferes with the axial foot fixing bolt. Fix the cylinder body (by tightening the axial foot fixing bolt) before attaching the piping fitting.
  (Attaching the piping fitting first will cause interference and prevent tightening of the axial foot fixing bolt.)

SCP*3
CMK2
CMA2
SCM
SCG
SCA2
SCS2
CKV2
CAV2/COVP/N2
SSD2
SSG
SSD
CAT
MDC2
MVC
SMG
MSD/MSDG
FC*
STK
SRL3
SRG3
SRM3
SRT3
MRL2
MRG2
SM-25
ShkAbs
FJ
FK
Spd Contr
Ending

■ Piping port position and operating direction

Bore size ø12 to ø20 or equiv.

● Option code (blank, R, B, T)

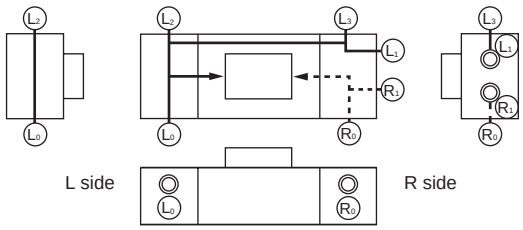

Ⓡ indicates the pressurized ports on R side and Ⓛ indicates the pressurized ports on L side. When the product is shipped from the factory, ports other than one each of Ⓡ0 and Ⓛ0 are sealed with plugs. Remove the plugs when piping to the plugged ports.
Option (D) is not available.

Bore size ø25

● Option code (blank, R, B, T)

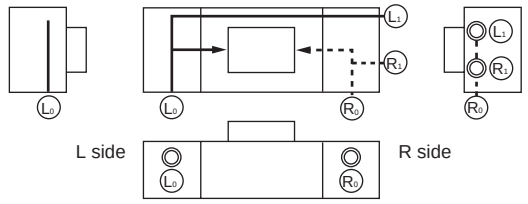

Ⓡ indicates the pressurized ports on R side and Ⓛ indicates the pressurized ports on L side. When the product is shipped from the factory, ports other than one each of Ⓡ0 and Ⓛ0 are sealed with plugs. Remove the plugs when piping to the plugged ports. Bottom piping is not possible. If bottom piping is necessary, select the option (D).

● Option (D) (bottom piping)

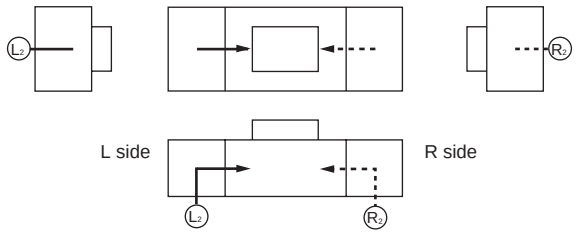

Ⓡ indicates the pressurized ports on R side and Ⓛ indicates the pressurized ports on L side. There are no ports for piping other than Ⓡ2 and Ⓛ2.

■ Do not damage surface flatness by denting or scratching the body (tube) mounting surface or the end plate surface.

⚠ CAUTION

■ Pay attention when designing the brake control circuit.

A slight amount of external leakage is inherent to the structure of SRL3 and other slit rodless cylinders. Therefore, brake control using a 3-position valve with all ports closed may fail to keep the stop position of the table. Use the control circuit with both sides pressurized with 3-position P/A/B connection valve.
However, note that the table may deviate from origin if air pressure is applied in the de-energized state when starting after a pressure drop.

■ Basic circuit diagram

● Horizontal load

When piping is as shown in Fig. 1, equal pressure is applied to both ends of the piston when stopped to prevent the table from popping out when operation is started.

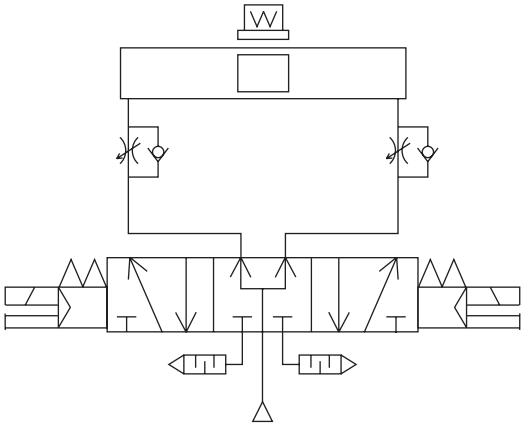

Fig. 1

● Vertical load

When vertical load works as shown in Figure 2, the table moves in the load direction. Install a regulator with check valve on the top to reduce thrust in the load direction to balance the load.

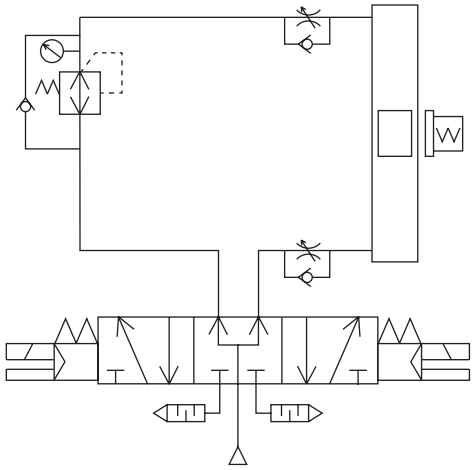

Fig. 2

■ Do not use the cylinder in places where it is directly exposed to coolant, oil mist, etc.

Be sure to provide a protective cover, etc., if the cylinder must be installed in such a place.

■ Do not use this product where foreign matter such as cutting chips, dust, or spatter, etc., will contact or enter the cylinders.

Provide a protective cover, etc., if the cylinder must be installed in such a place. Be sure to consult with CKD for use in these environments.

■ CKD's shock absorber is a repair part.

Replace when the energy absorption performance has degraded or the operation is not smooth.

SRM3

High precision guided rodless cylinder

ø25/ø32/ø40/ø63

Rodless

Overview

High precision rodless cylinder (ø25 to ø63) with two integrated high precision linear guides. Ideal for high-precision transfer of parts.

Features

Thin design resistant to bending moment

Safety (Position locking unit is available as option)

A position locking unit that can mechanically lock at a desired point in the full stroke can be installed, increasing machinery safety.

Fixing the full stroke adjusting unit

The full stroke adjusting unit with shock absorber is securely fixed with a special flat nut to prevent displacement at the stroke end. No spacer is necessary for a gap between the unit and cover.

CONTENTS

Series variation	1674
● Double acting (SRM3)	1676
● Double acting/position locking (SRM3-Q)	1676
Selection guide	1688
Technical data	1694
⚠ Safety precautions	1698

The cylinder switches T2YH, T2YV, T3YH, and T3YV are scheduled for end of production at the end of December 2023.

Series variation

High precision guided rodless cylinder SRM3 Series

Variation	Model No. JIS symbol	Bore size (mm)	Standard stroke (mm)												
			200	300	400	500	600	700	800	900	1000	1100	1200	1300	1400
Double acting	SRM3 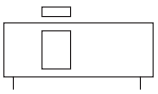	ø25 equivalent/ ø32 equivalent	●	●	●	●	●	●	●	●	●				
		ø40 equivalent/ ø63 equivalent	●	●	●	●	●	●	●	●	●	●	●	●	●
Double acting/ position locking	SRM3-Q	ø25 equivalent/ ø32 equivalent	●	●	●	●	●	●	●	●	●				
		ø40 equivalent/ ø63 equivalent	●	●	●	●	●	●	●	●	●	●	●	●	●

●: Standard, ◎: Option, ▒ : Not available

Standard stroke (mm)							Min. stroke (mm)	Max. stroke (mm)	Custom stroke (per mm)	Cushion				Option								Switch	Page
										Without cushion	Both sides cushioned	R side cushioned	L side cushioned	Both side full stroke adjustable with shock absorber	R side full stroke adjustable with shock absorber	L side full stroke adjustable with shock absorber	Full stroke adjustable with adjusting bracket to be added later	Both side full stroke adjustable with light-load shock absorber	R side full stroke adjustable with light-load shock absorber	L side full stroke adjustable with light-load shock absorber	Copper and PTFE free		
1500	1600	1700	1800	1900	2000					N	B	R	L	A	A1	A2	A3	E	E1	E2	P6		
▒	▒	▒	▒	▒	▒		50	1000	1	●	●	●	●	◎	◎	◎	◎	◎	◎	◎	●	◎	1676
●	●	●	●	●	●		80	2000		●	●	●	●	◎	◎	◎	◎	◎	◎	◎	●		
▒	▒	▒	▒	▒	▒		50	1000	1	●	●	●	●	◎	◎	◎	◎	◎	◎	◎	●	◎	1676
●	●	●	●	●	●		80	2000		●	●	●	●	◎	◎	◎	◎	◎	◎	◎	●		

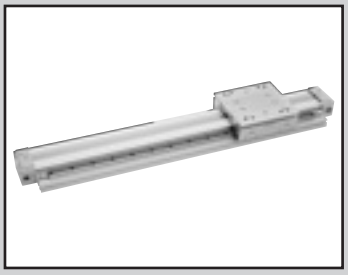

High precision guided rodless cylinder

Double acting SRM3 Series

Double acting/position locking SRM3-Q Series

● Bore size: ø25/ø32/ø40/ø63 or equiv.

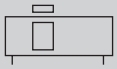

RoHS CAD

Specifications

1 MPa ≈ 145.0 psi, 1 MPa = 10 bar

Item		SRM3				SRM3-Q			
		Standard/with switch				Position locking/with switch			
Bore size	mm	ø25 or equiv.	ø32 or equiv.	ø40 or equiv.	ø63 or equiv.	ø25 or equiv.	ø32 or equiv.	ø40 or equiv.	ø63 or equiv.
Actuation		Double acting				Double acting/position locking			
Working fluid		Compressed air							
Max. working pressure	MPa	0.7 (≈100 psi, 7 bar)							
Min. working pressure	MPa	0.15 (≈22 psi, 1.5 bar)			0.1	0.15 (≈22 psi, 1.5 bar)			0.1
Proof pressure	MPa	1.05 (≈150 psi, 10.5 bar)							
Ambient temperature	°C	5 (41°F) to 60 (140°F)							
Port size	Cylinder body port	Rc1/8	Rc1/4		Rc3/8	Rc1/8	Rc1/4		Rc3/8
	Position locking port	-				Rc1/8			
Stroke tolerance	mm	$^{+2.0}_{0}$(to 1000)				$^{+2.5}_{0}$(to 2000)			
Working piston speed	mm/s	50 to 1500 (*1, *2)							
Cushion		Air cushion							
Lubrication		Not required							
Repeat stopping accuracy	mm	±0.03							
Position locking mechanism		-				Attached to R side of cover			
Holding force	N	-				Max. thrust x 0.7			

*1: For common port piping, working piston speed varies depending on stroke. Contact CKD.
*2: (1) When the piston moves at 500 to 1500 mm/s, reduce the speed when entering the position locking mechanism to 500 mm/s or less
(2) To reduce the speed, add an external shock absorber or deceleration circuit.
(3) Apply grease regularly to the sliding part of the lock lever.

Allowable absorbed energy

Bore size (mm)	Cushioned		Without cushion	With shock absorber (initial set point)	
	Allowable absorbed energy (J)	Cushion stroke (mm)	Allowable absorbed energy (J)	Absorbed energy (J)	Effective stroke (mm)
ø25 or equiv.	1.40	20.9	0.015	10	9
ø32 or equiv.	2.57	23.5	0.030	18	13
ø40 or equiv.	4.27	23.9	0.050	50	16.5
ø63 or equiv.	17.4	29.6	0.138	86	21

Stroke

Bore size (mm)	Standard stroke (mm)	Max. stroke (mm)	Min. stroke (mm)
ø25, ø32 or equiv.	200, 300, 400, 500, 600, 700, 800, 900, 1000	1000	50
ø40, ø63 or equiv.	200, 300, 400, 500, 600, 700, 800, 900, 1000, 1100, 1200, 1300, 1400, 1500, 1600, 1700, 1800, 1900, 2000	2000	80

Note: The custom stroke is available in 1 mm increments.

Number of installed switches and min. stroke (mm)

Switch quantity	1		2		3		4		5		6		7		8		9	
Switch model No. / Bore size (mm)	T*V	T*H	T*V	T*H	T*V	T*H	T*V	T*H	T*V	T*H	T*V	T*H	T*V	T*H	T*V	T*H	T*V	T*H
ø25 or equiv.	50	50	50	50	90	100	135	150	180	200	225	250	270	300	315	350	360	400
ø32 or equiv.	50	50	50	50	90	100	135	150	180	200	225	250	270	300	315	350	360	400
ø40 or equiv.	80	80	80	80	90	100	135	150	180	200	225	250	270	300	315	350	360	400
ø63 or equiv.	80	80	80	80	90	100	135	150	180	200	225	250	270	300	315	350	360	400

Switch specifications

● 1-color/2-color LED/for AC magnetic field proof

Item	2-wire proximity		3-wire proximity		2-wire reed							2-wire proximity
	T2YH/ T2YV	T2WH/ T2WV	T3YH/ T3YV	T3WH/ T3WV	TOH/TOV		T5H/T5V		T8H/T8V			T2YD/ T2YDT (*4)
Applications	Dedicated for programmable controller		For programmable controller, relay		For programmable controller, relay		For programmable controller, relay (no lamp), serial		For programmable controller, relay			Dedicated for programmable controller
Output method	-		NPN output		-							
Power supply voltage	-		10 to 28 VDC		-							
Load voltage	10 to 30 VDC	24 VDC ±10%	30 VDC or less		12/24 VDC	110 VAC	5/12/24 VDC	110 VAC	12/24 VDC	110 VAC	220 VAC	24 VDC ±10%
Load current	5 to 20 mA (*2)		50 mA or less		5 to 50 mA	7 to 20 mA	50 mA or less	20 mA or less	5 to 50 mA	7 to 20 mA	7 to 10 mA	5 to 20 mA
Indicator	Red/green LED (Lit when ON)		Red/green LED (Lit when ON)		LED (Lit when ON)		No indicator lamp		LED (Lit when ON)			Red/green LED (Lit when ON)
Leakage current	1 mA or less		10 μA or less		0 mA							1 mA or less
Weight g	1 m: 33 3 m: 87 5 m: 142	1 m: 18 3 m: 49 5 m: 80	1 m: 33 3 m: 87 5 m: 142	1 m: 18 3 m: 49 5 m: 80	1 m: 18 3 m: 49 5 m: 80				1 m: 33 3 m: 87 5 m: 142			1 m: 61 3 m: 166 5 m: 272

*1 : After shipment, modification from reed switch to proximity switch or vice versa is not possible.
If the cylinder switch is not specified (i.e., blank), a reed switch will be attached to the cylinder body.
*2 : Refer to Ending Page 1 for detailed switch specifications and dimensions.
*3 : Switches other than the above models, such as switches with connectors, are also available. Refer to Ending Page 1.
*4 : The max. load current is 20 mA at 25°C. The current is lower than 20 mA if the operating ambient temperature around the switch is higher than 25°C. (5 to 10 mA at 60°C)
*5 : Switch for AC magnetic field (T2YD/T2YDT) cannot be used in DC magnetic field.

Cylinder weight

Unit: kg

Bore size (mm)	Weight for 0 mm stroke			Additional weight per St = 100mm
	Basic (SRM3)	Position locking (SRM3-Q)	Switch weight	
ø25 or equiv.	2.4	2.9	Refer to the weight in the switch specifications.	0.59
ø32 or equiv.	3.3	4.2		0.72
ø40 or equiv.	4.8	6.0		1.20
ø63 or equiv.	15.1	17.8		1.99

Theoretical thrust table

(Unit: N)

Bore size (mm)	Operating direction	Working pressure MPa							
		0.1	0.15	0.2	0.3	0.4	0.5	0.6	0.7
ø25	Push/Pull	-	81.4	1.08×10^2	1.63×10^2	2.17×10^2	2.71×10^2	3.25×10^2	3.80×10^2
ø32	Push/Pull	-	1.21×10^2	1.63×10^2	2.44×10^2	3.26×10^2	4.07×10^2	4.88×10^2	5.70×10^2
ø40	Push/Pull	-	1.90×10^2	2.53×10^2	3.80×10^2	5.06×10^2	6.33×10^2	7.60×10^2	8.86×10^2
ø63	Push/Pull	3.14×10^2	4.70×10^2	6.27×10^2	9.41×10^2	1.25×10^3	1.57×10^3	1.88×10^3	2.20×10^3

SCP*3
CMK2
CMA2
SCM
SCG
SCA2
SCS2
CKV2
CAV2/COVP/N2
SSD2
SSG
SSD
CAT
MDC2
MVC
SMG
MSD/MSDG
FC*
STK
SRL3
SRG3
SRM3
SRT3
MRL2
MRG2
SM-25
ShkAbs
FJ
FK
Spd Contr
Ending

How to order

No switch (built-in magnet for switch)

SRM3 - 25 B - 500 —— C0 — A

With switch (built-in magnet for switch)

SRM3 - 25 B - 500 - T0H - R - A

Ⓐ Model No.
Ⓑ Bore size
Ⓒ Cushion
Ⓓ Stroke
Ⓔ Switch model No. *2
Ⓕ Switch quantity
Ⓖ Option *3 *4 *5

Code	Description
Ⓐ Model No.	
SRM3	Standard
SRM3-Q	Position locking

Ⓑ Bore size (mm)	
25	ø25
32	ø32
40	ø40
63	ø63

Ⓒ Cushion	
B	Both sides cushioned
R	R side cushioned
L	L side cushioned
N	Without cushion

Ⓓ Stroke (mm)

Bore size	Stroke (*1)	Custom stroke
ø25	50 to 1000	In 1 mm increments
ø32	50 to 1000	
ø40	80 to 2000	
ø63	80 to 2000	

Ⓔ Switch model No.

Axial lead wire	Radial lead wire	Contact	Voltage AC	Voltage DC	Indicator	Lead wire
T0H*	T0V*	Reed	●	●	1-color LED	2-wire
T5H*	T5V*	Reed	●	●	No indicator lamp	2-wire
T8H*	T8V*	Reed	●	●	1-color LED	2-wire
T2WH*	T2WV*	Proximity		●	2-color LED	2-wire
T2YH*	T2YV*	Proximity		●	2-color LED	2-wire
T3WH*	T3WV*	Proximity		●	2-color LED	3-wire
T3YH*	T3YV*	Proximity		●	2-color LED	3-wire
T2YD*	-	Proximity		●	2-color LED for AC magnetic field	2-wire
T2YDT*	-	Proximity		●	2-color LED for AC magnetic field	2-wire

*** Lead wire length**	
Blank	1 m (standard)
3	3 m (option)
5	5 m (option)

*** Select only when the switch model No. is not specified *6**	
C0	With integrated magnet for reed switch
C1	With integrated magnet for proximity switch

Ⓕ Switch quantity	
R	1 on R side
L	1 on L side
D	2
T	3
4	4 (when there are more than 4 switches, indicate switch quantity.)

Ⓖ Option

			Bore size (ø)	25	32	40	63
A	Full stroke adjustable		With shock absorber on both sides	●	●	●	●
A1	Full stroke adjustable		With shock absorber on R side	●	●	●	●
A2	Full stroke adjustable		With shock absorber on L side	●	●	●	●
A3	Full stroke adjustable		Adjusting bracket to be added later	●	●	●	●
E	Full stroke adjustable		With light-load shock absorber - both sides	●	●	●	●
E1	Full stroke adjustable		With light-load shock absorber - R side	●	●	●	●
E2	Full stroke adjustable		With light-load shock absorber on L side	●	●	●	●
Blank	Port position	F (Standard)	Cushion needle position: F (Standard)	●	●	●	●
R	Port position	R (Common port)	Cushion needle position: F	●	●	●	
B	Port position	F	Cushion needle position: B	●	●	●	●
T	Port position	R (Common port)	Cushion needle position: B	●	●	●	
D	Port position	D	Cushion needle position: F	●	●	●	●
S	Port position	D	Cushion needle position: D		●	●	●

⚠ Precautions for model No. selection

*1 : Refer to page 1676 for the min. stroke with switch.

*2 : Switches other than Ⓔ Switch model No. are also available. (Made to order) Refer to Ending Page 1 for details.

*3 : To install the full stroke adjusting bracket later, you need to remove the cover and attach a flat nut. A flat nut is attached to option "A3" to enable retrofitting the full stroke adjusting bracket.

*4 : The full stroke adjusting bracket on R side is provided as standard for the position locking. Therefore, if "A1" or "E1" is selected, a shock absorber only is added to R side. In the case of "A", R side is position locking and full stroke adjustable with shock absorber, and L side is full stroke adjustable with shock absorber. (Figure below)

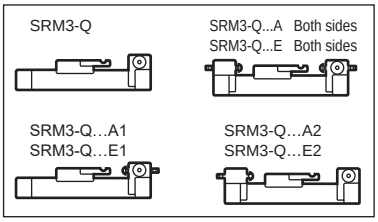

*5 : Copper and PTFE free as standard. (except for type with shock absorber)

*6 : The built-in magnet cannot be changed after shipment.

*7 : Square nuts (two types, eight pieces each) are supplied for use of the T-groove.

[Example of model No.]

SRM3-25B-500-T0H-R-A

Model: High precision guided rodless cylinder

Ⓐ Model No. : Standard
Ⓑ Bore size : ø25 mm
Ⓒ Cushion : Both sides cushioned
Ⓓ Stroke : 500 mm
Ⓔ Switch model No. : Reed T0H switch
Ⓕ Switch quantity : 1 on R side
Ⓖ Option : Both-side full stroke adjustable, with shock absorber

How to order switch

● Switch body only

SW - T0H

→ Switch model No.
(Item Ⓔ on page 1678)

How to order discrete shock absorber

Model	Discrete shock absorber model No.	
	Standard (-A)	Light-load (-E)
SRM3-25	NCK-00-1.2	NCK-00-0.7-C
SRM3-32	NCK-00-2.6	NCK-00-1.2
SRM3-40	NCK-00-7	NCK-00-2.6
SRM3-63	NCK-00-12	NCK-00-7

Specifications for rechargeable battery

(Catalog No. CC-1226A)

● Design compatible with rechargeable battery manufacturing process

SRM3 - ····· - P4*

SRM3 - Q - ····· - P4*

How to order repair parts

SRM3 - 40 K - 200

Bore size (Item Ⓑ on page 1678)

Stroke (Item Ⓓ on page 1678)

How to order full stroke adjusting bracket kit (Applies to option code A3.)

SRM3 - 40

- **A1** (Full stroke adjusting bracket kit with shock absorber)
- **E1** (Full stroke adjusting bracket kit with light-load shock absorber)

Bore size (Item Ⓑ on page 1678)

(For configurations, refer to “Full stroke adjusting bracket kit” on page 1686.)

SCP*3
CMK2
CMA2
SCM
SCG
SCA2
SCS2
CKV2
CAV2/COVP/N2
SSD2
SSG
SSD
CAT
MDC2
MVC
SMG
MSD/MSDG
FC*
STK
SRL3
SRG3
SRM3
SRT3
MRL2
MRG2
SM-25
ShkAbs
FJ
FK
Spd Contr
Ending

Internal structure and parts list (ø25 or ø63 equiv.)

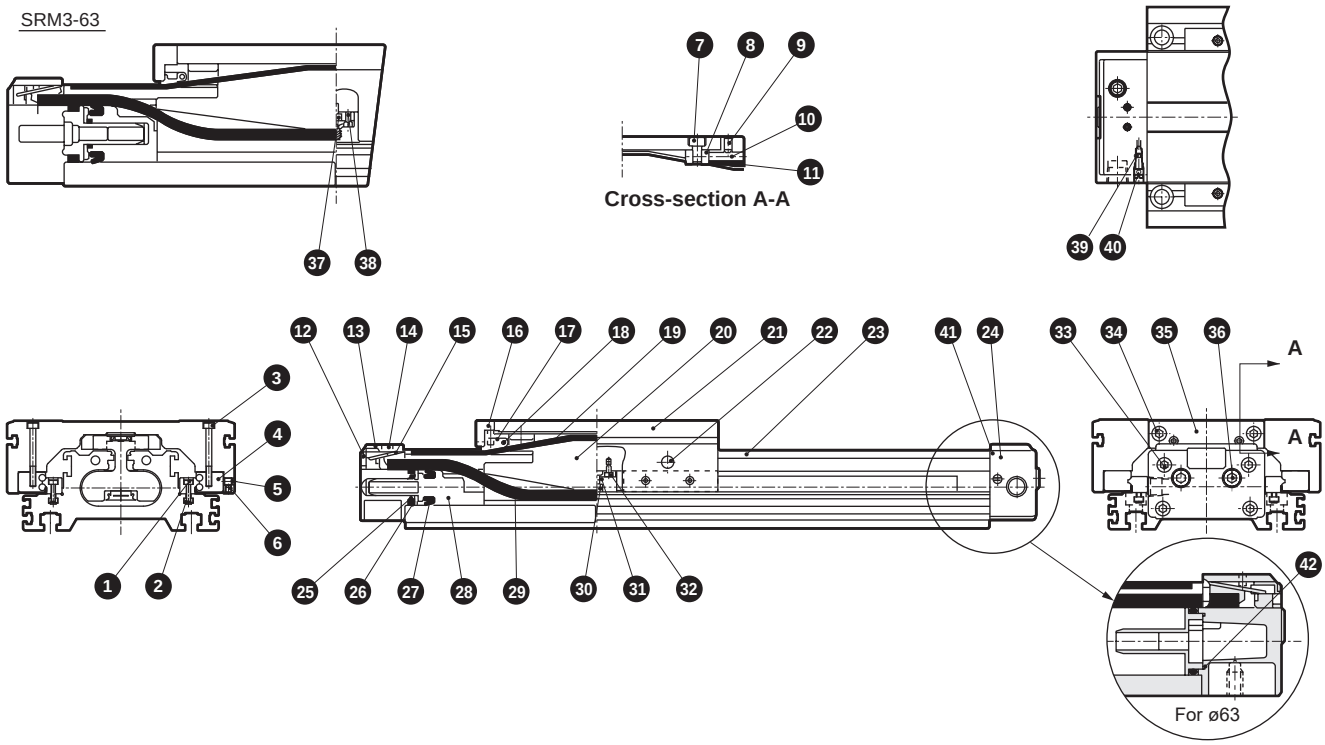

No.	Part name	Material	Remarks	No.	Part name	Material	Remarks
1	Hexagon socket head cap screw	Alloy steel	Black finish	22	Grease nipple (ball bowl)	Copper	Nickel plating
2	Nut rail	Steel	Black finish	23	Cylinder tube	Aluminum alloy	Alumite
3	Hexagon socket head cap screw	Alloy steel	Black finish	24	Cover (R) assembly		
4	High precision guide	Steel		25	Cushion packing	Urethane rubber	
5	Hexagon socket set screw	Alloy steel	Zinc chromate	26	Cylinder gasket	Nitrile rubber	
6	Hexagon socket set screw	Alloy steel	Zinc chromate	27	Piston packing	Nitrile rubber	
7	Hexagon socket head cap screw	Alloy steel	Zinc chromate	28	Piston	Acetal resin	
8	Yoke holder	Steel	Black finish	29	Seal belt	Urethane rubber	
9	Hexagon socket set screw	Alloy steel	Zinc chromate	30	Magnet		
10	Hexagon socket set screw	Alloy steel	Zinc chromate	31	Magnet case	Polyamide	
11	Dust wiper	Acetal resin		32	Hexagon socket head cap screw	Stainless steel	
12	Belt cover	Polyamide		33	Hexagon socket head cap screw	Alloy steel	Zinc chromate
13	Cover (L) assembly			34	Hexagon socket head cap screw	Alloy steel	Zinc chromate
14	Hexagon socket set screw	Alloy steel	Zinc chromate	35	Table cover	Steel	Zinc chromate
15	Belt spacer	Steel	Zinc chromate	36	Plug	Steel	Zinc chromate
16	Spring	Steel	Black finish	37	Spacer	Aluminum alloy	
17	Belt holder	Acetal resin		38	Hexagon socket head cap screw	Stainless steel	
18	Parallel pin	Steel	Zinc chromate	39	Needle gasket	Nitrile rubber	
19	Dust-proof belt	Stainless steel + nitrile rubber		40	Cushion needle	Steel	Zinc chromate
20	Yoke	Aluminum alloy	Alumite	41	O-ring for common port	Nitrile rubber	
21	Table	Aluminum alloy	Alumite	42	Cushion ring gasket	Nitrile rubber	ø63 only

Repair parts list

No./part name / Bore size (mm)	Kit No.	Repair parts No.
ø25 or equiv.	SRM3-25K-*	11 19 25 26 27 29 39 41
ø32 or equiv.	SRM3-32K-*	
ø40 or equiv.	SRM3-40K-*	
ø63 or equiv.	SRM3-63K-*	11 19 25 26 27 29 39 41 42

● *1: Specify the kit No. when placing an order. Specify the stroke for *.

Internal structure and parts list: with shock absorber (ø25 to ø63 equiv.)

● Full stroke adjustable with standard shock absorber (SRM3-**-***-A)

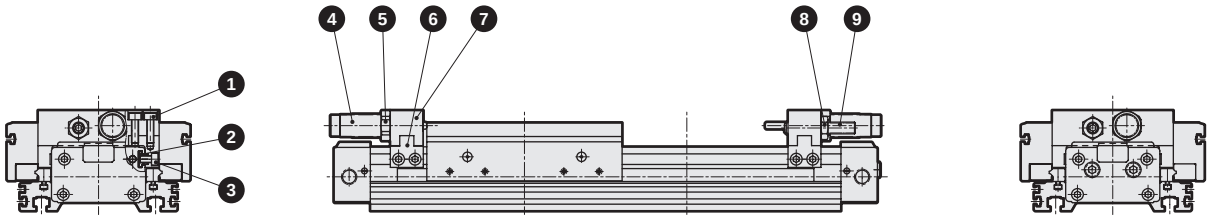

● Full stroke adjustable with light-load shock absorber (SRM3-**-***-E)

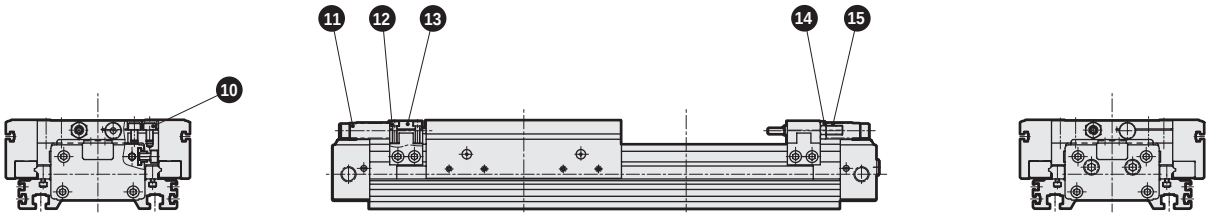

No.	Part name	Material	Remarks	No.	Part name	Material	Remarks
1	Hexagon socket head cap screw	Alloy steel	Galvanizing	9	Hexagon socket set screw	Alloy steel	Galvanizing
2	Adaptor nut	Steel	Black finish	10	Hexagon socket head cap screw	Alloy steel	Galvanizing
3	Hexagon socket head cap screw	Alloy steel	Galvanizing	11	Shock absorber		
4	Shock absorber			12	Hexagon socket head cap screw	Alloy steel	Galvanizing
5	Hexagon nut	Steel	Galvanizing	13	Plate (3)	Aluminum alloy	Alumite
6	Adaptor	Steel	Galvanizing	14	Hexagon nut	Steel	Galvanizing
7	Plate (1)	Aluminum alloy	Alumite	15	Hexagon socket set screw	Alloy steel	Galvanizing
8	Hexagon nut	Steel	Galvanizing				

Internal structure and parts list: with position locking (ø25 to ø63 equiv.)

● With position locking (SRM3-Q)

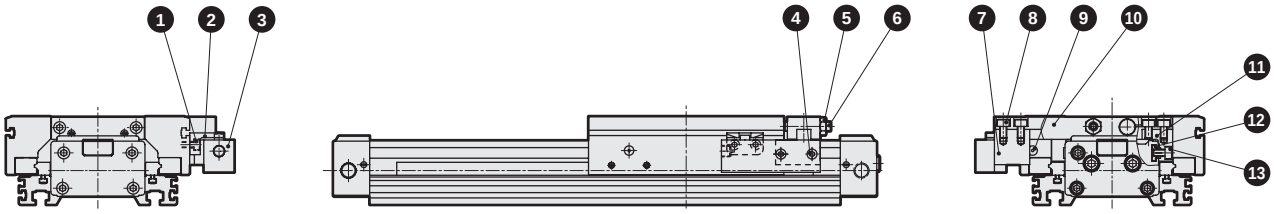

● Position locking/full stroke adjustable with light-load shock absorber (SRM3-Q-**-***-E1)

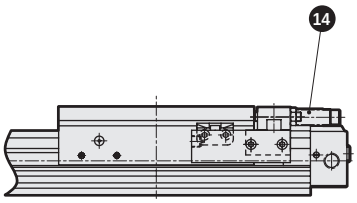

● Position locking/full stroke adjustable with standard shock absorber (SRM3-Q-**-***-A1)

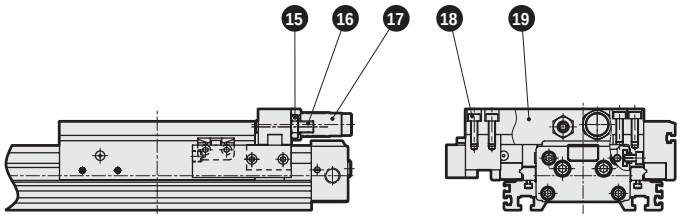

No.	Part name	Material	Remarks	No.	Part name	Material	Remarks
1	Hexagon socket head cap screw	Alloy steel	Galvanizing	10	Plate (4)	Aluminum alloy	Alumite
2	Lock lever	Steel	Galvanizing	11	Adaptor	Steel	Galvanizing
3	Position locking mechanism assembly			12	Adaptor nut	Steel	Black finish
4	Hexagon socket head cap screw	Alloy steel	Galvanizing	13	Hexagon socket head cap screw	Alloy steel	Galvanizing
5	Hexagon nut	Steel	Galvanizing	14	Shock absorber		
6	Hexagon socket set screw	Alloy steel	Galvanizing	15	Hexagon nut	Steel	Galvanizing
7	Installation block	Aluminum alloy	Alumite	16	Hexagon socket set screw	Alloy steel	Galvanizing
8	Hexagon socket head cap screw	Alloy steel	Galvanizing	17	Shock absorber		
9	Grease nipple (ball bowl)	Copper	Nickel plating (not included in SRM-Q-25)	18	Hexagon socket head cap screw	Alloy steel	Galvanizing
				19	Plate (2)	Aluminum alloy	Alumite

SCP*3
CMK2
CMA2
SCM
SCG
SCA2
SCS2
CKV2
CAV2/COVP/N2
SSD2
SSG
SSD
CAT
MDC2
MVC
SMG
MSD/MSDG
FC*
STK
SRL3
SRG3
SRM3
SRT3
MRL2
MRG2
SM-25
ShkAbs
FJ
FK
Spd Contr
Ending

Dimensions

● With cylinder switch SRM3-**-**-***-T*V*
(L-shaped lead wire)

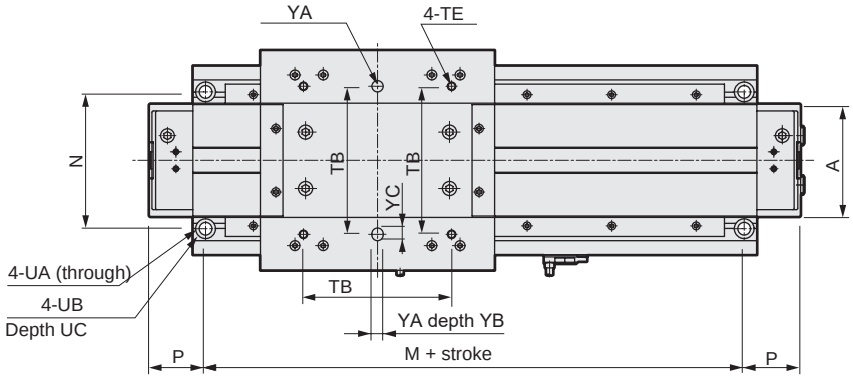

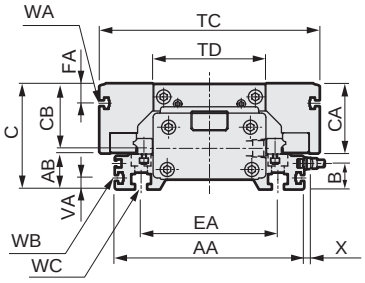

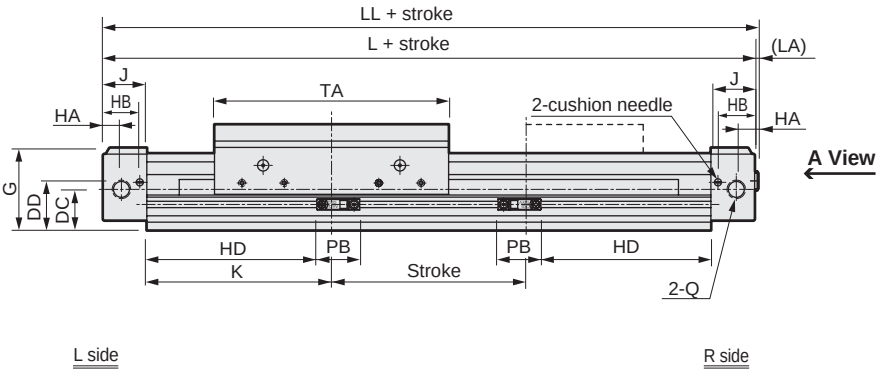

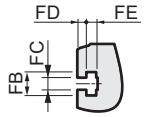

WA

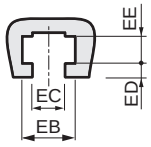

WC

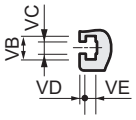

WB

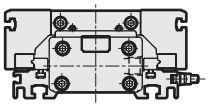

Note: WB part is not included in SRM3-25 and 32.

A view

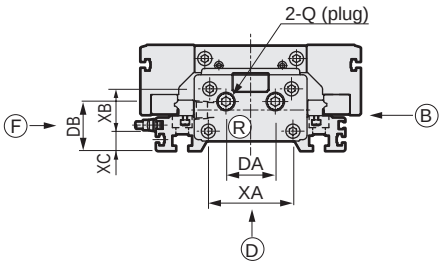

Code / Bore size (mm)	A	AA	AB	B	C	CA	CB	DA	DB	DC	DD	EA	EB	EC	ED
ø25 or equiv.	53	102	18	11.3	57	39	37	26	22	20	21.9	71	9.5	5.5	2.5
ø32 or equiv.	66	116	20	13.3	62	41.5	39.5	27	25	22.5	25.5	80	11	6.6	2.5
ø40 or equiv.	80	134	25	18.3	75	49.5	46	35	35	29	34	97	14.5	9	3.5
ø63 or equiv.	118	188	31.5	24.8	100	68	62.5	39	44.5	37.5	45.5	140	18	11	4

Code / Bore size (mm)	EE	FA	FB	FC	FD	FE	G	HA	HB	HE	J	K	L	LA	LL
ø25 or equiv.	4.5	10	8.5	4.5	3	3.7	43.5	7.5	20	-	24	98	244	2	246
ø32 or equiv.	6	10	8.5	4.5	3	3.7	47.5	10	23.5	17	28	106	268	2.5	270.5
ø40 or equiv.	7.5	14	8.5	4.5	3	3.7	58.5	13	26	22.3	31	131	324	2.5	326.5
ø63 or equiv.	9	20	9.5	5.5	3	4.5	76.5	15	32	31	39	187	452	2.5	454.5

*1: After shipment, modification from reed switch to proximity switch or vice versa is not possible.
*2: Option S is not available for ø25.

Dimensions

● Bottom piping (option: D/S)
·ø25 or equiv.

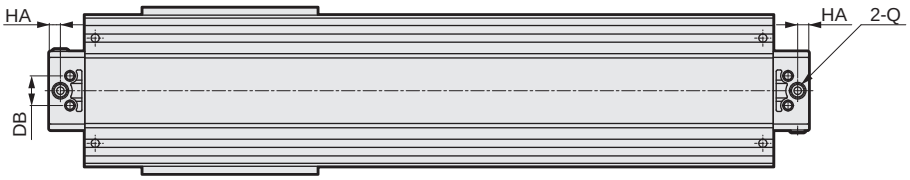

· ø32 or equiv. to ø63 or equiv.

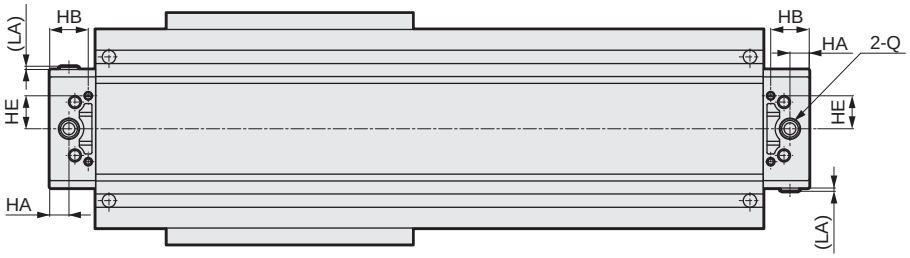

● With cylinder switch SRM3-**-**-***-T*H*
(Axial lead wire)

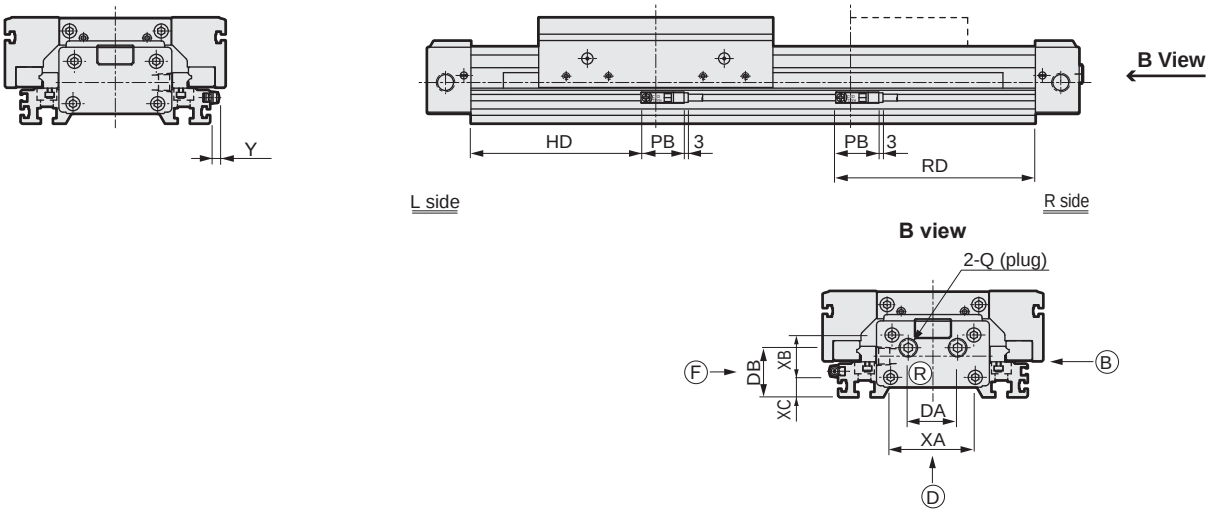

Code / Bore size (mm)	LL	M	N	P	Q	TA	TB	TC	TD	TE	UA	UB
ø25 or equiv.	246	182	71	31	Rc1/8	118	75	112	61	M5 depth 12	5.5	9.5 spot face depth 6.5
ø32 or equiv.	270.5	196	80	36	Rc1/4	132	85	128	65	M6 depth 13	6.6	11 spot face depth 6.5
ø40 or equiv.	326.5	244	97	40	Rc1/4	166	105	156	81	M6 depth 15	9	14 spot face depth 8.5
ø63 or equiv.	454.5	350	140	51	Rc3/8	250	160	224	118	M8 depth 20	11	17.5 spot face depth 10.5

Code / Bore size (mm)	VA	VB	VC	VD	VE	XA	XB	XC	YA	YC
ø25 or equiv.	-	-	-	-	-	38	23	8.5	$6^{+0.07}_{+0.02}$ depth 6	7
ø32 or equiv.	-	-	-	-	-	48	25	10	$6^{+0.07}_{+0.02}$ depth 6	7
ø40 or equiv.	8	8.5	4.5	2	3.7	60	30	14	$8^{+0.07}_{+0.02}$ depth 8	9
ø63 or equiv.	10	9.5	5.5	2.5	4.5	96	42	16.5	$10^{+0.07}_{+0.02}$ depth 10	12

Code	With switch																			
Bore size (mm)	T0H/V, T5H/V					T1H/V, T2Y*H/V, T3Y*H/V, T2YD					T8H/V					T2WH/V, T3WH/V				
	RD	HD	X	Y	PB	RD	HD	X	Y	PB	RD	HD	X	Y	PB	RD	HD	X	Y	PB
ø25 or equiv.	107.5	88.5	4	0.5	22.5	108.5	87.5	9.3(14.5)	6.3(11.5)	30.5(29.5)	102.5	81.5	9.3	6.3	30.5	105.5	90.5	4	0.5	22.5
ø32 or equiv.	115.5	96.5	4	0.5	22.5	116.5	95.5	9.3(14.5)	6.3(11.5)	30.5(29.5)	110.5	89.5	9.3	6.3	30.5	113.5	98.5	4	0.5	22.5
ø40 or equiv.	140.5	121.5	4	0.5	22.5	141.5	120.5	9.3(14.5)	6.3(11.5)	30.5(29.5)	135.5	114.5	9.3	6.3	30.5	138.5	123.5	4	0.5	22.5
ø63 or equiv.	196.5	177.5	4	0.5	22.5	197.5	176.5	9.3(14.5)	6.3(11.5)	30.5(29.5)	191.5	170.5	9.3	6.3	30.5	194.5	179.5	4	0.5	22.5

*1: Values in ( ) are for T1H/V, strong magnetic field proof.

SCP*3
CMK2
CMA2
SCM
SCG
SCA2
SCS2
CKV2
CAV2/ COVP/N2
SSD2
SSG
SSD
CAT
MDC2
MVC
SMG
MSD/ MSDG
FC*
STK
SRL3
SRG3
SRM3
SRT3
MRL2
MRG2
SM-25
ShkAbs
FJ
FK
Spd Contr
Ending

Dimensions

● Full stroke adjustable with standard shock absorber (SRM3-**-***-A)

Note: In SRM3-25-A, the shock absorber is installed inside the cover.

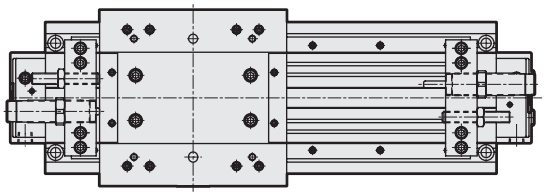

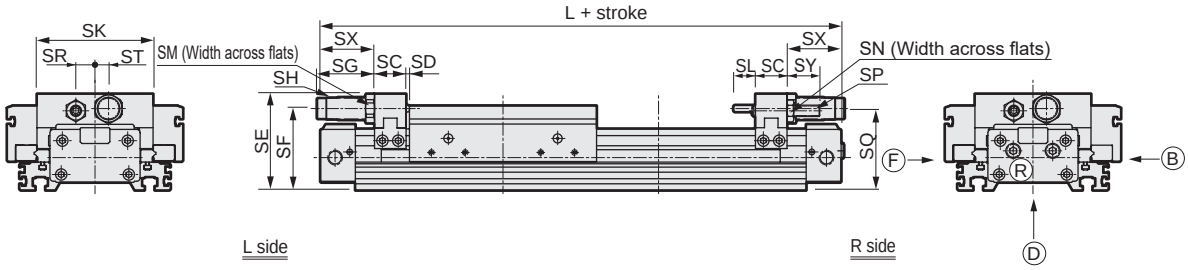

● Full stroke adjustable with light-load shock absorber (SRM3-**-***-E)

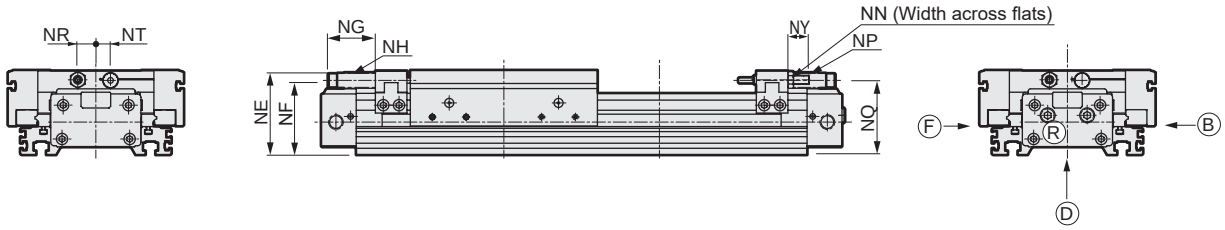

Code / Bore size (mm)	SC	SD	SE	SF	SG At max.	SG At min.	SG Adj range	SH O.D. thread	SH Max. absorbed energy (J)	SK	SL	SM	SN	SP	SQ	SR	ST
ø25 or equiv.	24	2	66	54.5	22.5	12.5	10	M12x1.0	12	78	11	17	10	M6	53	12	10
ø32 or equiv.	24	2	70.5	59.5	47	37	10	M14x1.5	26	86	15	19	13	M8	57.5	14	12
ø40 or equiv.	28	3	85.5	72.5	51	41	10	M20x1.5	70	103	19.5	24	17	M10	70.5	17	12
ø63 or equiv.	36	4	114.5	96	68	58	10	M25x1.5	120	150	25	32	24	M16	91.5	25	20

Code / Bore size (mm)	SX	SY	NE	NF	NG At max.	NG At min.	NG Adj range	NH O.D. thread	NH Max. absorbed energy (J)	NN	NP	NQ	NR	NT	NY	L
ø25 or equiv.	37	14	56.5	50	24	14	10	M10x1.0	7	10	M6	50	11	8	14	244
ø32 or equiv.	42	24	61.5	54	22.5	12.5	10	M12x1.0	12	10	M6	54	12	11	14	268
ø40 or equiv.	48	29	74.5	66	42	32	10	M14x1.5	26	13	M8	66.5	16	13	19	324
ø63 or equiv.	61	40	99.5	87.5	42	32	10	M20x1.5	70	19	M12	88	16	20	30	452

Dimensions

● Position locking (SRM3-Q)

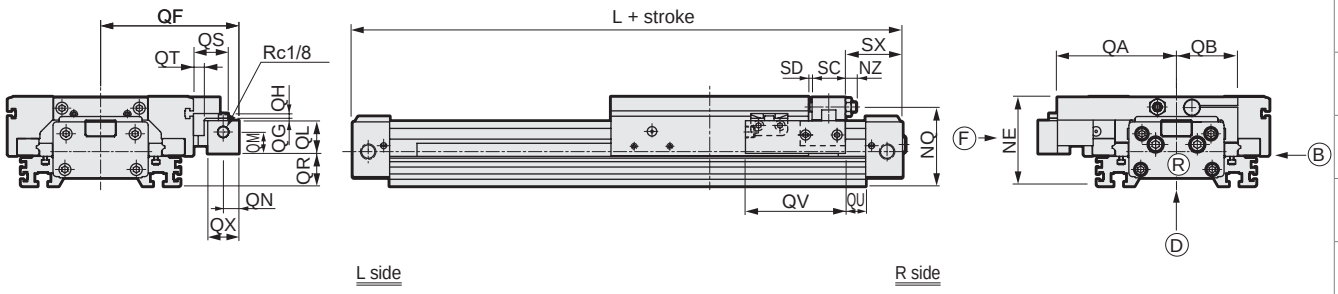

Note
In SRM3-Q (position locking)-25, 32 and 40, the T-switch is attached to the position in the figure below.

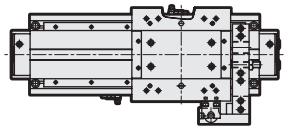

● Position locking/full stroke adjustable with light-load shock absorber (SRM3-Q-**-***-E1)

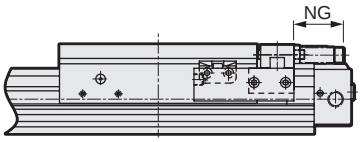

● Position locking/full stroke adjustable with standard shock absorber (SRM3-Q-**-***-A1)

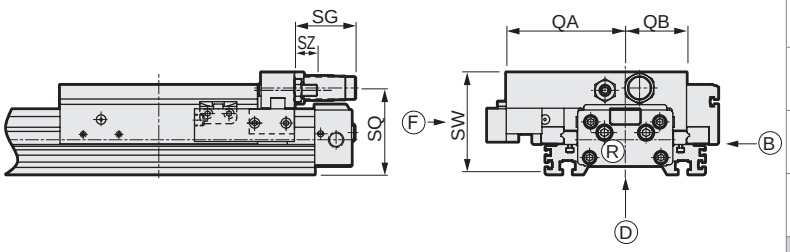

Code / Bore size (mm)	QA	QB	QC	QD	QF	QG	QH	QL	QM	QN	QR	QS	QT	QV	QU
ø25 or equiv.	78	39	31	26.5	94	2	4	27.5	18	13	13	29	9	84	17
ø32 or equiv.	86	43	31	26.5	102	2	4	27.5	18	13	16.5	29	9	84	18
ø40 or equiv.	100	51.5	31	17.5	116	2	4	27.5	18	13	27.5	29	9	84	17
ø63 or equiv.	140	75	34	20.5	156	2	5	33	21.5	15	41	36	12	100	22

Code / Bore size (mm)	QX	QW	NE	NG	NQ	NZ	SC	SD	SW	SG	SQ	SX	SZ	L
ø25 or equiv.	26	150	56.5	24	50	4	24	2	66	22.5	53	37	4	244
ø32 or equiv.	26	166	61.5	22.5	54	4	24	2	69.5	47	57.5	42	9	268
ø40 or equiv.	26	194	74.5	42	66.5	9	28	3	85.5	51	70.5	48	19	324
ø63 or equiv.	30	268	99.5	42	88	15	36	4	114.5	68	91.5	61	20	452

SCP*3
CMK2
CMA2
SCM
SCG
SCA2
SCS2
CKV2
CAV2/ COVP/N2
SSD2
SSG
SSD
CAT
MDC2
MVC
SMG
MSD/ MSDG
FC*
STK
SRL3
SRG3
SRM3
SRT3
MRL2
MRG2
SM-25
ShkAbs
FJ
FK
Spd Contr
Ending

Full stroke adjusting bracket kit

● Full stroke adjusting bracket kit (with shock absorber)

SRM3 - 25 - A1

Bore size
(Item Ⓑ on page 1678)

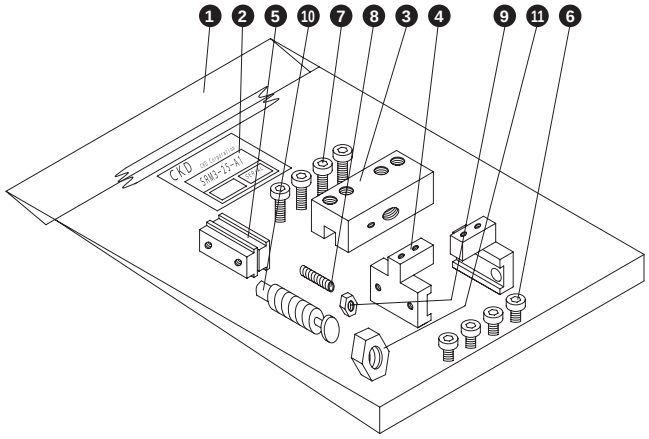

No.	Part name	Quantity
1	Plastic bag	1
2	Package label	1
3	Plate (1)	1
4	Adaptor	2
5	Adaptor nut	2
6	Hexagon socket head cap screw	4
7	Hexagon socket head cap screw	4
8	Hexagon socket set screw	1
9	Hexagon nut	1
10	Shock absorber	1
11	Hexagon nut	1

● Full stroke adjusting bracket kit (with light-load shock absorber)

SRM3 - 25 - E1

Bore size
(Item Ⓑ on page 1678)

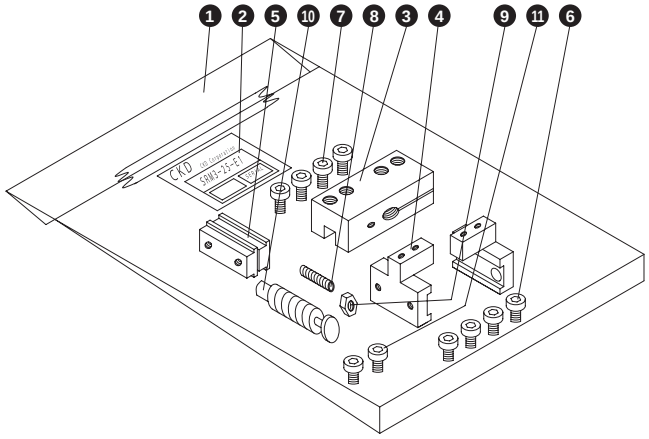

No.	Part name	Quantity
1	Plastic bag	1
2	Package label	1
3	Plate (3)	1
4	Adaptor	2
5	Adaptor nut	2
6	Hexagon socket head cap screw	4
7	Hexagon socket head cap screw	4
8	Hexagon socket set screw	1
9	Hexagon nut	1
10	Shock absorber	1
11	Hexagon nut	1

Kit weight list

Repair parts kit

Kit No.	Weight (g)
SRM3-25K-□	29 + 10 x stroke/100
SRM3-32K-□	33 + 10 x stroke/100
SRM3-40K-□	66 + 18 x stroke/100
SRM3-63K-□	115 + 18 x stroke/100

Full stroke adjusting bracket kit (with light-load shock absorber)

Kit No.	Weight (g)
SRM3-25-E1	174
SRM3-32-E1	207
SRM3-40-E1	349
SRM3-63-E1	930

Full stroke adjusting bracket kit (with shock absorber)

Kit No.	Weight (g)
SRM3-25-A1	247
SRM3-32-A1	298
SRM3-40-A1	581
SRM3-63-A1	1316

SCP*3
CMK2
CMA2
SCM
SCG
SCA2
SCS2
CKV2
CAV2/COVP/N2
SSD2
SSG
SSD
CAT
MDC2
MVC
SMG
MSD/MSDG
FC*
STK
SRL3
SRG3
SRM3
SRT3
MRL2
MRG2
SM-25
ShkAbs
FJ
FK
Spd Contr
Ending

SRM3 Series selection guide

As the selection conditions are different from those of general air cylinders, confirm whether the model is adequate or not according to the selection guide.

1 Step 1

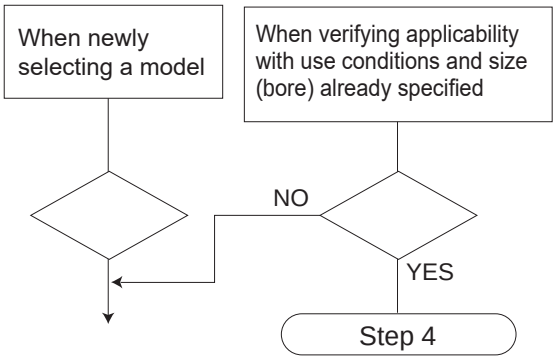

2 Step 2 Confirming working conditions

1. Working pressure (P) (MPa)
2. Load weight (M) (kg)
3. Applied load (F_L) (N)
4. Mounting orientation
5. Stroke (L) (mm)
6. Travel time (t) (s)
7. Operation speed (V) (m/s)

Formula of the cylinder's average operation speed V

$$V=\frac{L}{t}\times\frac{1}{1000}\text{(m/s)}$$

[Load weight]

Value of (weight of transported object + jig weight)

[Mounting orientation]

Operating direction: Horizontal + vertical

Mounting direction: With table upward, with table downward

3 Step 3 Selection of approximate size of cylinder

● Formula for calculating cylinder size (bore size)

$$F=\frac{\pi}{4}\times D^2\times P\times\frac{a}{100}\ \text{(N)}$$

$$\therefore D=\sqrt{\frac{4F}{\pi\cdot P\cdot a}}\ \text{(mm)}$$

D : Cylinder bore size (mm)
P : Working pressure (MPa)
a : Thrust efficiency (%) (Refer to Fig. 1)
F : Cylinder theoretical thrust (N)

D= ø

Figure 1 Trends of thrust efficiency of SRM3

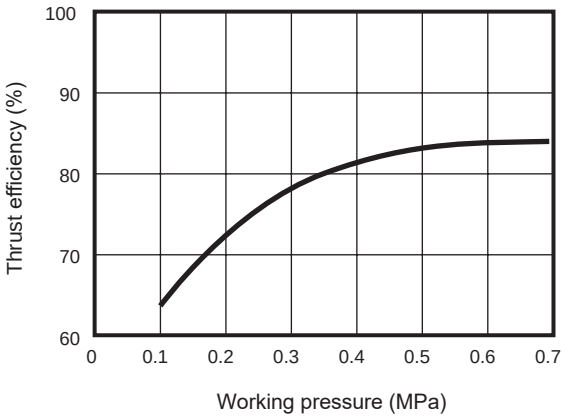

● When calculating from the theoretical thrust value in Table 1

Approximate required thrust ≥ Applied load x 2

("x 2" in "Applied load x 2" is for when the load factor is approx. 50% as a safety coefficient)

[Example] Working pressure 0.5 MPa

Applied load 20 N

* Required thrust is 20 x 2 = 40 N

The bore size selected from Table 1 with theoretical thrust of 40 N and over at working pressure of 0.5 MPa will be ø25.

D= ø25

[Cylinder theoretical thrust]

Table 1 Cylinder theoretical thrust value Unit: N

Bore size (mm)	Pressurized area (mm²)	Working pressure MPa							
		0.1	0.15	0.2	0.3	0.4	0.5	0.6	0.7
ø25 or equiv.	542	-	81.4	108	163	217	271	325	380
ø32 or equiv.	814	-	121	163	244	326	407	488	570
ø40 or equiv.	1266	-	190	253	380	506	633	760	886
ø63 or equiv.	3137	314	470	627	941	1255	1568	1882	2196

Note: Values in Table 1 do not include thrust efficiency.

4 Step 4 Calculation of load (W) and moments

Vertical load and static moment work according to the cylinder mounting direction and the position of center of gravity of load.

[Vertical load]

[W1 (Horizontal upward, vertical)]

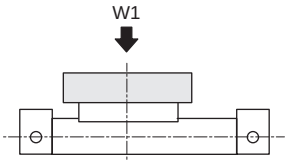

[W2 (Horizontal downward)]

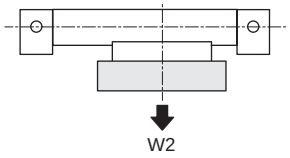

[W3 (Horizontal lateral)]

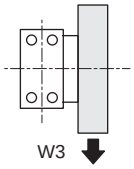

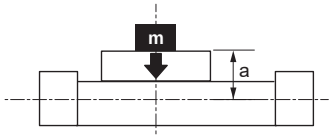

Value of a

Bore size	a(m)
ø25 or equiv.	0.057
ø32 or equiv.	0.040
ø40 or equiv.	0.046
ø63 or equiv.	0.063

[Static moment]

● Types of moment caused by load

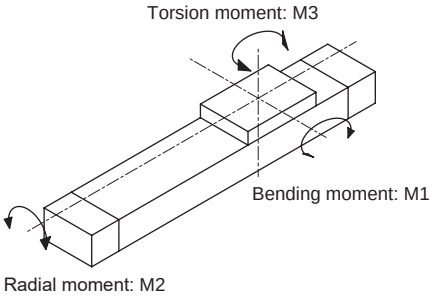

Unit: N·m

Mounting orientation		Horizontal upward	Horizontal downward	Horizontal lateral	Vertical
Vertical load W		mx9.8			-
Static moment	M1	$Wx\ell_1$	$Wx\ell_1$	-	$Wx(\ell_3+a)$
	M2	$Wx\ell_2$	$Wx\ell_2$	$Wx(\ell_3+a)$	-
	M3	-	-	$Wx\ell_1$	$Wx\ell_2$

m : Load weight [kg]
ℓ_1 : Length along the stroke direction from the center of table to the center of gravity of load [m]
ℓ_2 : Length in the width direction from the center of table to the center of gravity of load [m]
ℓ_3 : Length in the vertical direction from the center of table to the center of gravity of load [m]

Horizontal upward

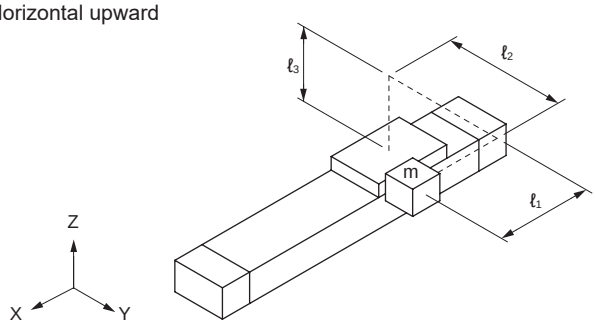

Horizontal downward

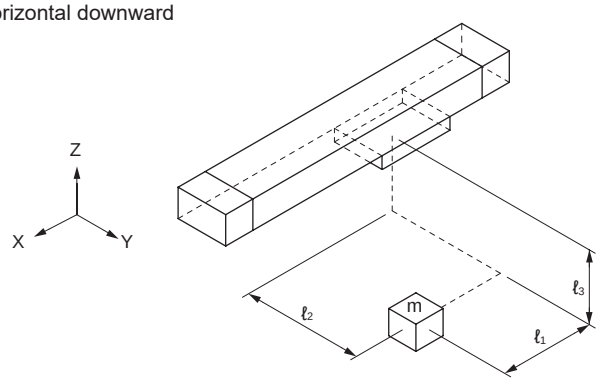

Horizontal lateral

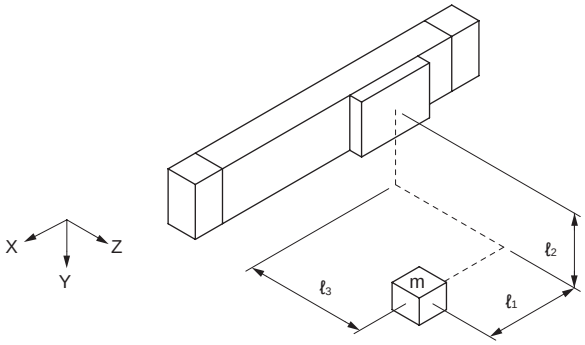

Vertical

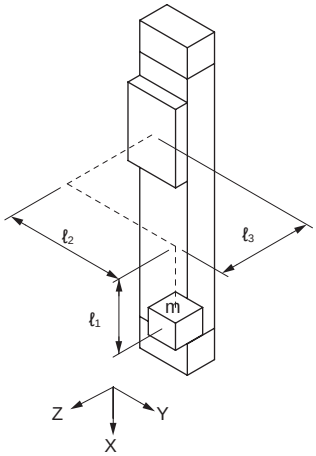

5 Step 5 Calculation of load and resultant moment

● Divide each load by the allowable value read from Figure 3 to Figure 8 to find load/moment ratio, and confirm that the total value is 1.0 or less.

Formula

$$\frac{W}{Wmax'} + \frac{M1}{M1max'} + \frac{M2}{M2max'} + \frac{M3}{M3max'} \leq 1.0$$

Wmax', M1max', M2max' and M3max' are values read from Figure 2 to Figure 7.

● If the total value is more than 1.0,
1. Review the load
2. Use a cylinder with wider bore size, etc., for revision.

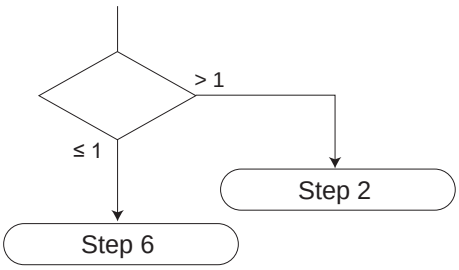

Figure 2 Allowable W1, W2 and W3 loads for SRM3-25 and 32

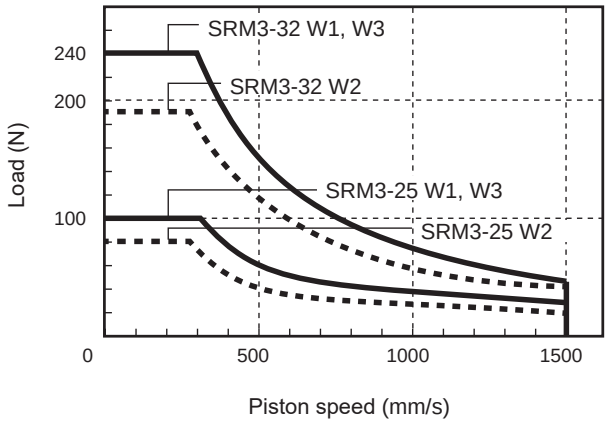

Figure 3 Allowable W1, W2 and W3 loads for SRM3-40 and 63

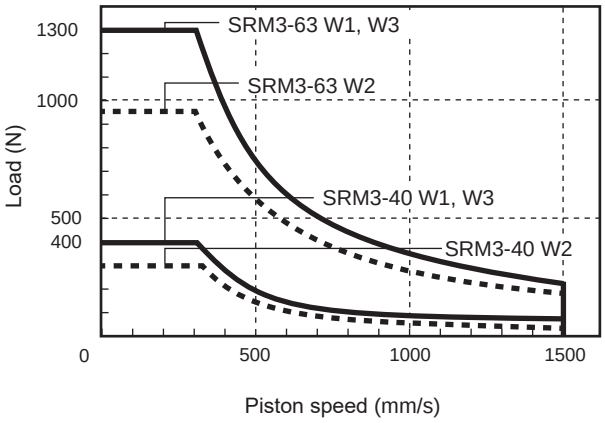

Figure 4 Allowable M1 and M3 moments for SRM3-25 and 32

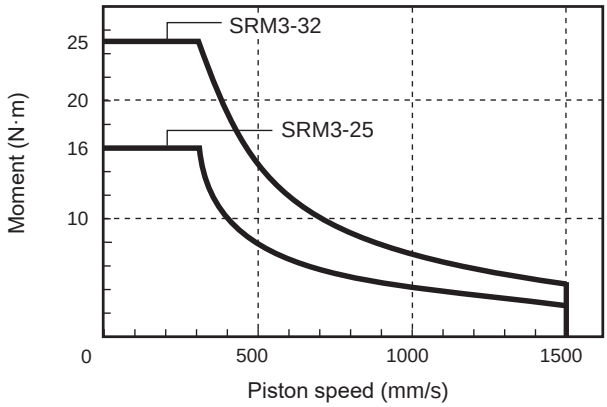

Figure 5 Allowable M1 and M3 moments for SRM3-40 and 63

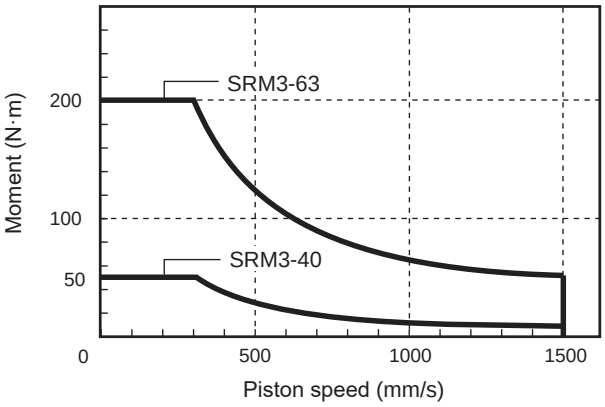

Figure 6 Allowable M2 moment for SRM3-25 and 32

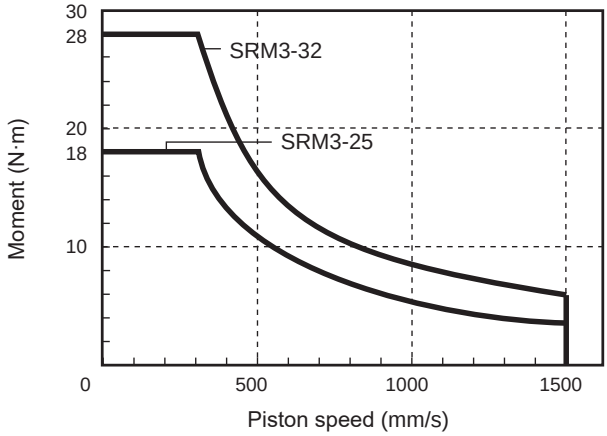

Figure 7 Allowable M2 moment for SRM3-40 and 63

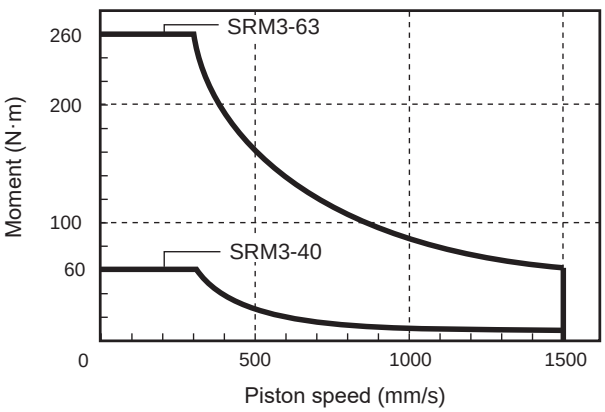

6 Step 6 Calculation of required thrust

Calculate the required cylinder thrust (F_N).

1. For horizontal operation
   $F_N = W \times 0.2 (N)$

2. For vertical operation
   $F_N = W (N)$

7 Step 7 Calculation of load factor

● Determine the load factor by taking into account the status of utilization such as stability, margin and service life of the cylinder.

● Formula of load factor (α)

$$\alpha = \frac{\text{Required thrust } (F_N)}{\text{Thrust of cylinder } (F)} \times 100\%$$

$$F = \frac{\pi}{4} \times D^2 \times P \times \frac{\mu}{100} (N)$$

D: Cylinder bore size (mm)

$$\frac{\pi}{4} \times D^2 = \text{Pressurized area } (mm^2)$$

● The cylinder theoretical thrust value in Table 4 can be used as the $\frac{\pi}{4} \times D^2 \times P$ value.

P: Working pressure (MPa)

μ: Thrust efficiency (Use the values in Figure 1.)

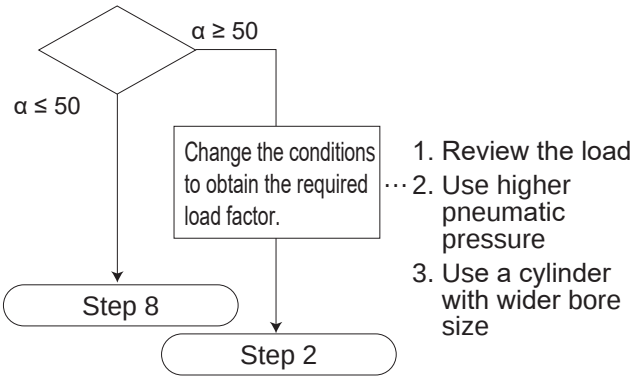

[Appropriate range of load factor]

● The piston speed differs depending on the load factor. In normal use, the values in Table 2 are recommended.

Table 2 (Appropriate range of load factor - reference value)

Working pressure MPa	Load factor %
0.2 to 0.3	α ≤ 40
0.3 to 0.6	α ≤ 50
0.6 to 0.7	α ≤ 60

[Example] Size of the cylinder used: ø25 or equiv.

Required thrust 4 N

Working pressure 0.5 MPa

$$\alpha = \frac{4}{542 \times 0.5 \times \frac{83}{100}} \times 100$$

= 2%

Appropriate since the result is α ≤ 50%.

8 Step 8 Confirming cushion capacity

Check if the kinetic energy generated by an actual load can be absorbed by the cylinder cushion.

[Allowable absorbed energy of cylinder]

● The kinetic energy absorption performance of the cylinder's cushion depends on the cylinder bore size. For SRM3, use the values in Table 3 for comparison.

Table 3 SRM3 allowable absorbed energy (E_1)

Bore size (mm)	Allowable absorbed energy (J)
ø25 or equiv.	1.40
ø32 or equiv.	2.57
ø40 or equiv.	4.27
ø63 or equiv.	17.4

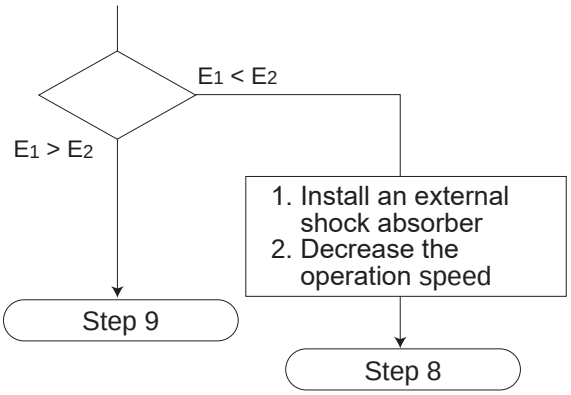

[Piston kinetic energy]

● Formula for calculating the piston kinetic energy (E_2)

$$E_2 = \frac{1}{2} \times M \times Va^2 \quad (J)$$

M : Applied load weight (kg)

Va : Speed of the piston entering the cushion (m/s)

$$Va = \frac{L}{t} \times \left(1 + 1.5 \times \frac{\alpha}{100}\right)$$

L: Stroke (m)

t : Operating time (S)

α :Load factor (%)

9 Step 9 Confirmation of inertia load

● Check whether the inertia force of the load caused by the piston operation is within the allowable range of the cylinder.

(1) Obtain the G coefficient from the speed of entering the cushion (Va) and Figure 8 (Trend of inertia force coefficient for SRM3). Use the speed of entering the cushion (Va) calculated in Step 8.

Va: Speed of the piston entering the cushion (m/s)

$$Va = \frac{L}{t} \times \left(1 + 1.5 \times \frac{\alpha}{100}\right)$$

L : Stroke (m)
t : Operating time (S)
α : Load factor (%)

(2) Obtain the bending moment (M1i) and torsion moment (M3i) of the inertia force.

Unit: N·m

Mounting orientation		Horizontal upward	Horizontal downward	Vertical	Horizontal lateral
Dynamic moment	M1i	Wx(ℓ_3+a)xG			
	M2i	M2i dynamic moment is not generated.			
	M3i	Wxℓ_2xG			

Moment of inertia force can be calculated with the formulas above regardless of the mounting direction.

(3) Add the moments of static load (M1 and M3) and the moments of inertia force (M1i and M3i) and check that the resultant values are within the max. allowable values in Table 4.

M1 + M1i ≤ M1max
M3 + M3i ≤ M3max

M1max and M3max are the values in Table 4.

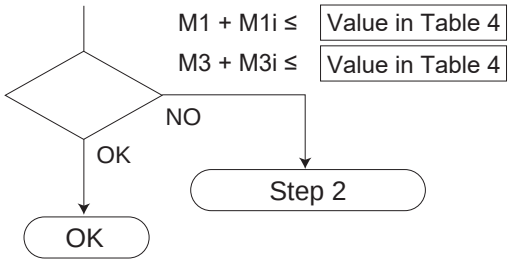

Figure 8 Trend of inertia force coefficient of SRM3

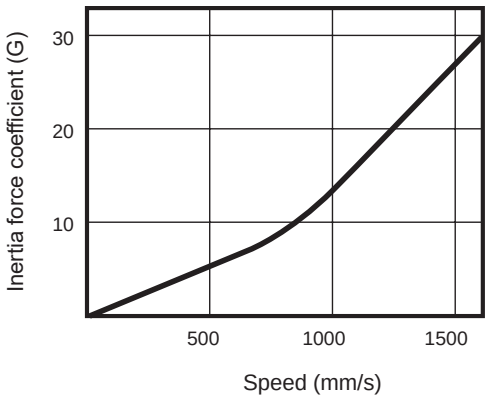

Table 4 Applied loads/max. allowable moments

Item / Bore size (mm)	Vertical load: W1max(N)	Vertical load: W2max(N)	Vertical load: W3max(N)
ø25 or equiv.	100	80	100
ø32 or equiv.	240	190	240
ø40 or equiv.	400	320	400
ø63 or equiv.	1300	1000	1300

Item / Bore size (mm)	Bending moment M1max (N·m)	Radial moment M2max (N·m)	Torsion moment M3max (N·m)
ø25 or equiv.	16	18	16
ø32 or equiv.	25	28	25
ø40 or equiv.	50	60	50
ø63 or equiv.	200	260	200

Table 4 shows the max. allowable values. The allowable values at specific operating speeds are as shown in Figure 2 to Figure 7. (The cylinder can be used in the range below and to the left of the characteristics curves of Figure 2 to Figure 7.)

1 Cushion performance and kinetic energy

(1) Cushion

● Cushion

The cushion absorbs piston kinetic energy by using air compressibility and prevents the piston and cover from colliding at the stroke end. Therefore, the cushion itself does not reduce the piston speed at the stroke end.

Table 5 shows kinetic energy that can be absorbed by the cushion. If kinetic energy exceeds these values or bounding due to air compression should be avoided, select the type with shock absorber or add a separate shock absorber.

(Refer to Step 8 above.)

● SRM3 cushion performance

Table 5 Allowable absorbed energy of cushion (E_1)

Bore size (mm)	Effective cushion length (mm)	Allowable absorbed energy (J)	
		With cushion	Without cushion
ø25 or equiv.	20.9	1.40	0.015
ø32 or equiv.	23.5	2.57	0.030
ø40 or equiv.	23.9	4.27	0.050
ø63 or equiv.	29.6	17.4	0.138

● Formula for kinetic energy calculation (E2)

$$E_2 = \frac{1}{2} x M x V^2 \quad (J)$$

M: Load weight (kg)

V : Speed of the piston entering the cushion Rush speed (m/s)

$$V = \frac{L}{t} x (1 + 1.5x \frac{\alpha}{100})$$

L : Cylinder stroke (m)

t : Piston operation time (s)

α : Cylinder load factor (%)

$$\alpha = \frac{\text{Applied load}}{\text{Thrust of cylinder}} x100$$

(2) Shock absorber

Shock absorbers used for SRM3 are shown in Table 7.

Use within the specifications for shock absorbers in Table 6.

Table 6 Specifications

Shock absorber model No. / Item		NCK-00-0.7-C	NCK-00-1.2	NCK-00-2.6	NCK-00-7	NCK-00-12
Type/Classification		Spring return without adjuster				
Max. energy absorption J		7	12	26	70	120
Stroke mm		8	10	15	20	25
Max. absorbed energy per hour kJ/hr.		12.6	21.6	39.0	84.0	86.4
Max. colliding speed m/s		1.5	2.0		2.5	3.0
Max. operating frequency Cycle/min.		30		25	20	12
Ambient temperature °C		-10 to 80				
Required mounting strength N		6150	8400	12100	24400	33500
Return time S		0.3 or less			0.4 or less	
Product weight kg		0.02	0.04	0.07	0.2	0.3
Return spring force	When extended N	2.0	2.9	5.9	9.8	16.3
	When compressed N	4.3	5.9	11.8	21.6	33.3

● The allowable absorbed energy of SRM3 changes depending on the colliding speed. Keep it within 1/2 of the max. energy absorption in Table 9 at 1000 mm/s to 1500 mm/s colliding speed.

Table 7 Model numbers of applicable shock absorbers

Model	Model numbers of applicable shock absorbers	
	Standard (-A)	Light-load (-E)
SRM3-25	NCK-00-1.2	NCK-00-0.7-C
SRM3-32	NCK-00-2.6	NCK-00-1.2
SRM3-40	NCK-00-7	NCK-00-2.6
SRM3-63	NCK-00-12	NCK-00-7

● Confirmation of allowable colliding energy of shock absorber

Calculate the colliding object equivalent weight Me and the colliding energy E from the formula in the table below. Confirm that Me and E are within the allowable values shown in Figure 9. Also confirm that the operating frequency, colliding speed and other specifications are within the allowable values in the table.

Note that the allowable colliding object equivalent weight Me and allowable colliding energy E change depending on the colliding speed.

● Code

E : Colliding energy (J)
Me : Colliding object equivalent weight (kg)
m : Workpiece weight (kg)
F : Cylinder thrust (N)
V : Colliding speed (m/s)
St : Shock absorber stroke (m)
g : Gravity acceleration 9.8 (m/s²)

	Horizontal movement	Vertical down	Vertical up
Applications	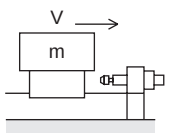	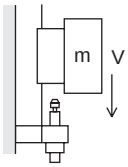	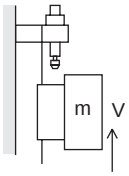
Colliding equivalent weight Me (kg)	$Me = m + \frac{2F \cdot St}{V^2}$	$Me = m + \frac{2 \cdot St\ (F+mg)}{V^2}$	$Me = m + \frac{2 \cdot St\ (F-mg)}{V^2}$
Energy E (J)	$E = \frac{mV^2}{2} + F \cdot St$	$E = \frac{mV^2}{2} + (F+mg) \cdot St$	$E = \frac{mV^2}{2} + (F-mg) \cdot St$

Figure 9 Allowable colliding object equivalent weight

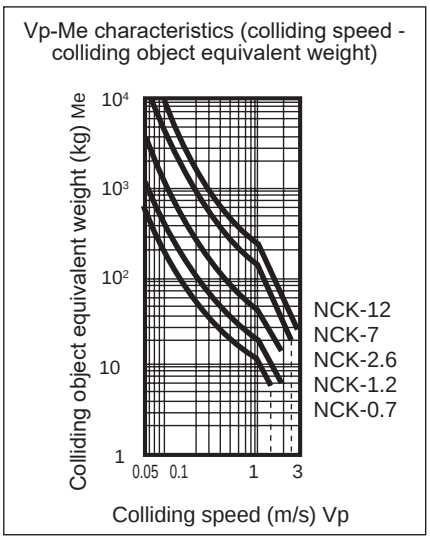

● With cushion/shock absorber Transfer weight - speed characteristics

The figures below show the transfer weight and speed characteristics. They differ depending on the use conditions. Confirm that they are within the allowable values in Table 6.

SRM3 with cushion/shock absorber Transport weight and speed characteristics

SRM3-25

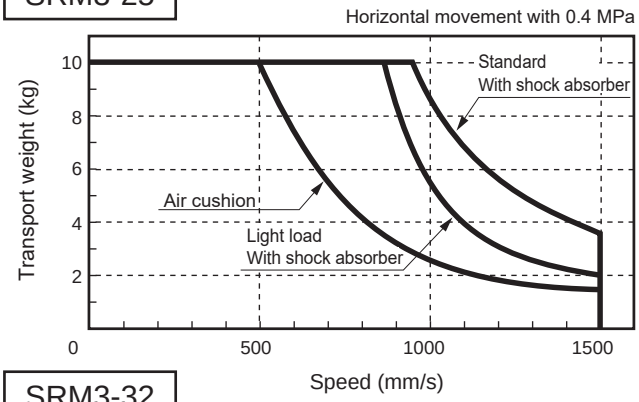

SRM3-32

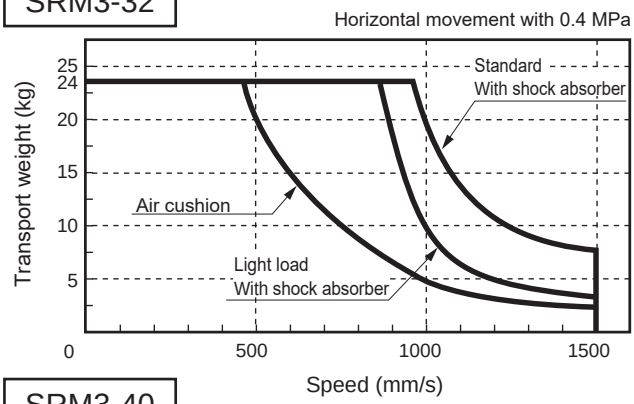

SRM3-40

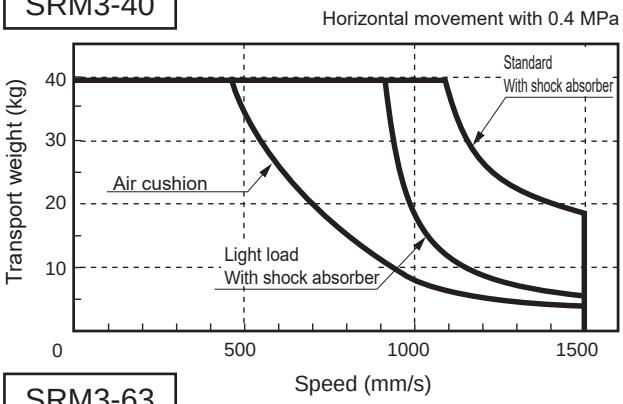

SRM3-63

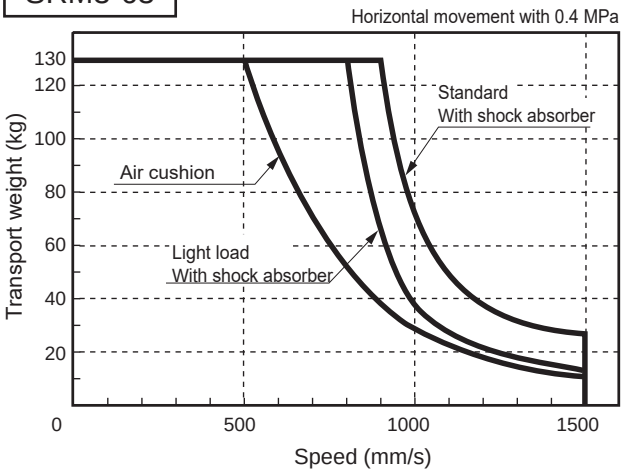

Precautions for use

A shock absorber can absorb the rated energy at the rated stroke. However, the initial shock absorber installation position is adjusted to have a stroke allowance at the cylinder's stroke end. Therefore, the absorbed energy will be less than the allowable absorbed energy (Table 11). If the rated absorbed energy is required, adjust the shock absorber so that the full stroke can be used.

Table 11 Initial set point of the type with shock absorber

Model	Standard (-A)		Light-load (-E)	
	Absorbed energy (J)	Effective stroke (mm)	Absorbed energy (J)	Effective stroke (mm)
SRM3-25	10	9	5.7	7
SRM3-32	18	13	10	9
SRM3-40	50	16.5	18	13
SRM3-63	86	21	50	16.5

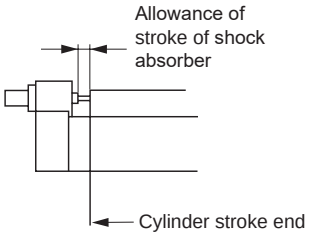

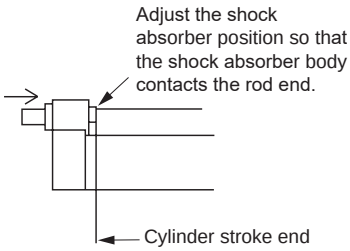

(Note) This explanation applies to the shock absorber supplied with the full stroke adjustable.

Adjusting the shock absorber

Change the operational stroke of the shock absorber to adjust its absorbed energy.

SCP*3
CMK2
CMA2
SCM
SCG
SCA2
SCS2
CKV2
CAV2/COVP/N2
SSD2
SSG
SSD
CAT
MDC2
MVC
SMG
MSD/MSDG
FC*
STK
SRL3
SRG3
SRM3
SRT3
MRL2
MRG2
SM-25
ShkAbs
FJ
FK
Spd Contr
Ending

● Example of calculation (SRM3-25-A)

Applicable shock absorber NCK-00-1.2

● Example of calculation (1)

Rising and lowering

Working conditions

● Load weight m 3 kg

● Colliding speed

Rising 0.5 m/s

Lowering 1.0 m/s

● Working pressure 0.5 MPa (245 N)

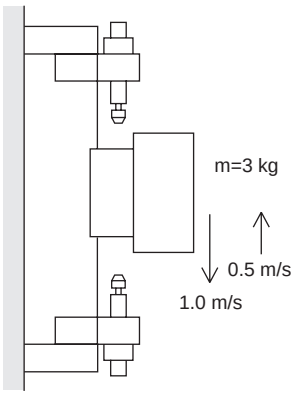

(1) Kinetic energy when rising (E_1)

$$E_1 = \frac{3x0.5^2}{2} + (245 - 3x9.8)x0.01$$

$$= 2.5(J)$$

The kinetic energy (E1) is less than the max. energy absorption in Table 6 and can be absorbed.

$$Me = 3 + \frac{2x0.01x(245 - 3x9.8)}{0.5^2}$$

$$= 20(kg)$$

From Figure 10, Me of the shock absorber for SRM3-25-A:
The result is 32 kg at V = 0.5 m/s, which is allowable.

(2) Kinetic energy when falling (E_1)

$$E_1 = \frac{3x1.0^2}{2} + (245 + 3x9.8)x0.01$$

$$= 4.2(J)$$

The kinetic energy (E1) is less than 1/2 of the max. energy absorption in Table 6 and can be absorbed.

$$Me = 3 + \frac{2x0.01x(245 + 3x9.8)}{1.0^2}$$

$$= 8.5(kg)$$

From Figure 9, Me of the shock absorber for SRM3-25-A:
The Me value is 24kg at V = 1.0m/s, which is allowable.

● Example of calculation (2) Horizontal

Working conditions

Load weight M 2 kg

Colliding speed

Horizontal 1.5 m/s

Working pressure 0.3 MPa (147 N)

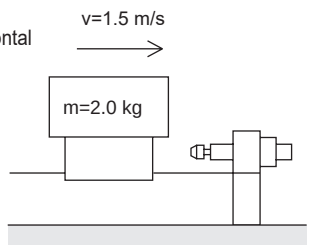

Horizontal kinetic energy (E1)

$$E_1 = \frac{2x1.5^2}{2} + 147x0.01$$

$$= 3.7(J)$$

The kinetic energy (E1) is less than 1/2 of the max. energy absorption in Table 6 and can be absorbed.

$$Me = 2 + \frac{2x147x0.01}{1.5^2}$$

$$= 3.3(kg)$$

From Figure 9, Me at V = 1.5 (m/s) of the shock absorber for SRM3-25-A is 10 kg. Therefore the result of 3.4 < 10 is allowable.

(Note) Refer to the selection guide Step 9 (9 Confirmation of inertia load) and keep the inertia load within the allowable value.

2 Sag of table (displacement at the table end)

The figures below show displacement at the table end when moment operates.
The table on the right shows the table end position.

mm

Model	a	b	c
SRM3-25	50	50	50
SRM3-32	55	55	55
SRM3-40	70	70	70
SRM3-63	100	100	100

M1 moment M2 moment M3 moment

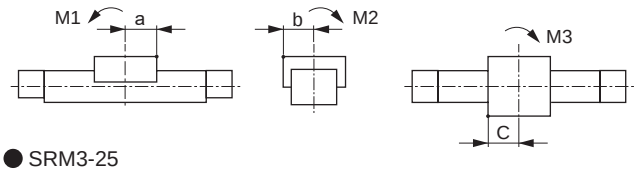

● SRM3-25

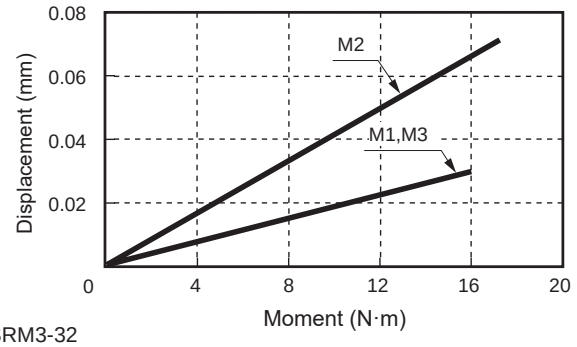

● SRM3-32

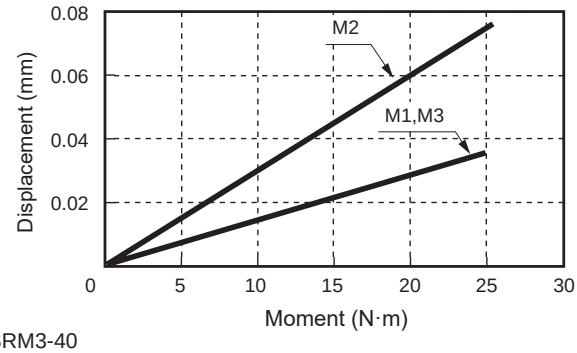

● SRM3-40

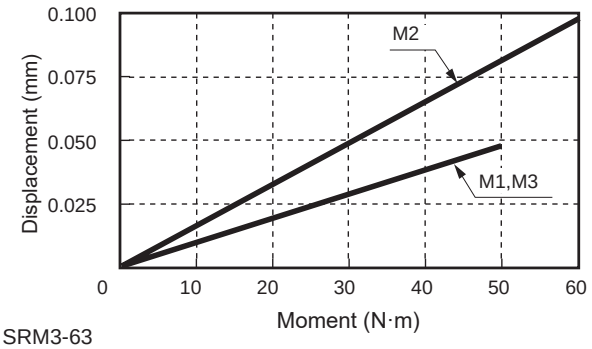

● SRM3-63

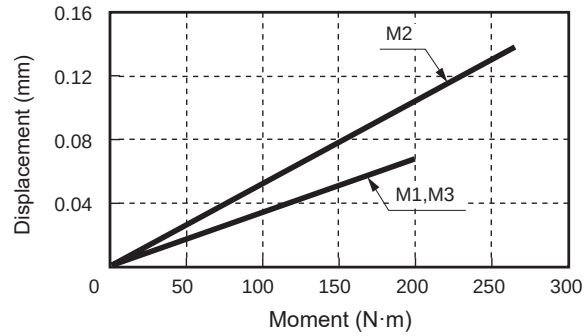

3 Support intervals

Sag increases with a longer stroke and larger bending moment. Use the intervals in the table below as a guide to fix the tube.

Model	Recommended support intervals (ℓ) mm
SRM3-25	400
SRM3-32	400
SRM3-40	500
SRM3-63	600

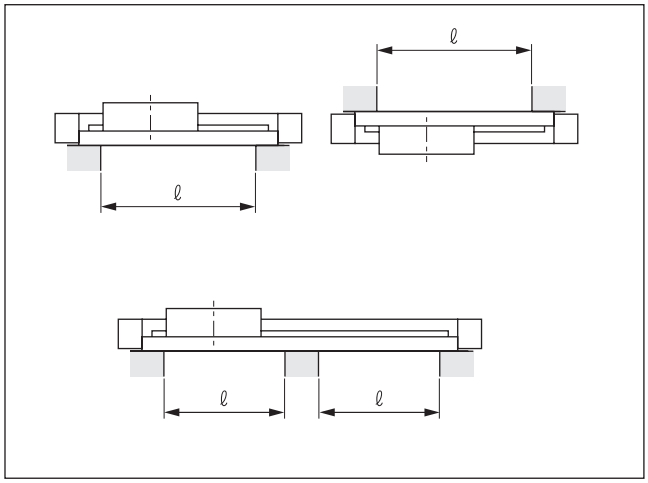

Safety Precautions

Be sure to read this section before use.
Refer to Intro Page 73 for general information of the cylinder, and to Intro Page 80 for general information of the cylinder switch.

Product-specific cautions: High precision guided rodless cylinder SRM3 Series

Design/selection

1. Common

CAUTION

■ Pay attention when designing the brake control circuit.
A slight amount of external leakage is inherent to the structure of SRL3 and other slit rodless cylinders. Therefore, brake control using a 3-position valve with all ports closed may fail to keep the stop position of the table. Use the control circuit with both sides pressurized with 3-position P/A/B connection valve. However, note that the table may deviate from origin if air pressure is applied in the de-energized state when starting after a pressure drop.

■ Basic circuit diagram

● Horizontal load
When piping is as shown in Fig. 1, equal pressure is applied to both ends of the piston when stopped to prevent the table from popping out when operation is restarted.

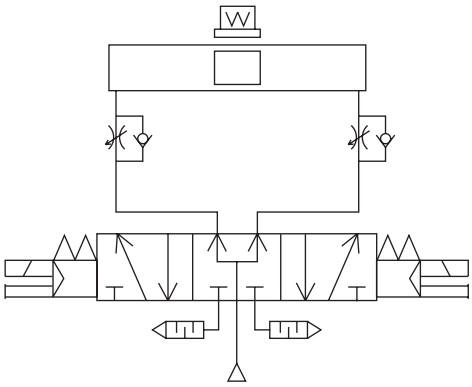

Fig. 1

● Vertical load
When vertical load works as shown in Figure 2, the table moves in the load direction. Install a regulator with check valve on the top to reduce thrust in the load direction to balance the load.

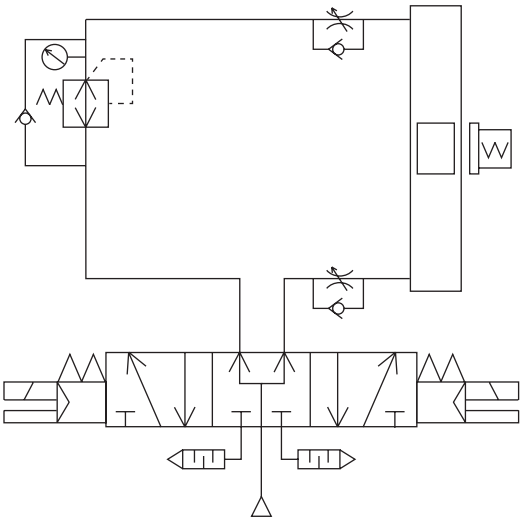

Fig. 2

■ The cylinder switch may malfunction if there is a magnetic substance such as a metal plate installed adjacently. Check that a distance of 10 mm is provided from the side surface of the table.

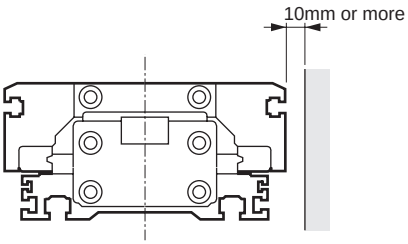

■ Do not use the cylinder in places where it is directly exposed to coolant, oil mist, etc.
Be sure to provide a protective cover, etc., if the cylinder must be installed in such a place.

■ Do not use this product where foreign matter such as cutting chips, dust, or spatter, etc., will contact or enter the cylinders.
Provide a protective cover, etc., if the cylinder must be installed in such a place. Be sure to consult with CKD for use in these environments.

■ Prevent negative pressure from occurring inside the cylinder tube. Using the cylinder as an air balancer or operating the table with external force or inertia force with all ports closed may cause negative pressure inside the cylinder, resulting in air leakage if the seal belt comes off. Do not use external force or inertia force, otherwise negative pressure will occur inside the cylinder.

2. Position locking SRM3-Q

CAUTION

■ Cylinder load factor must be 50% or less.
If the load factor is high, the lock may not be released, or the lock section may be damaged.

■ To operate the cylinder at 500 mm/s and over, reduce the speed when entering the position locking mechanism to 500 mm/s or less.
To reduce the speed, add an external shock absorber or deceleration circuit.

Mounting, installation and adjustment

1. Common

⚠ WARNING

■ How to adjust the stroke adjusting unit

Full stroke adjustable with standard shock absorber (SRM3-**-***-A1)

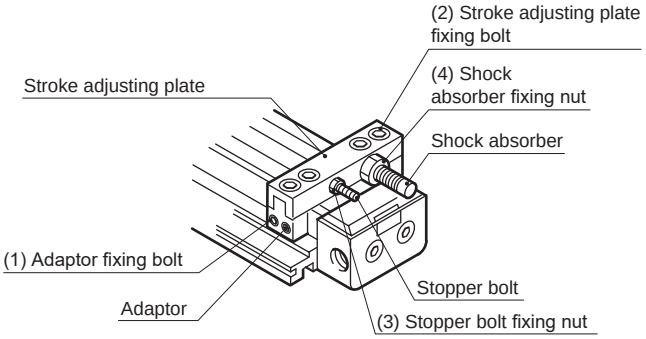

Full stroke adjustable with light-load shock absorber (SRM3-**-***-E1)

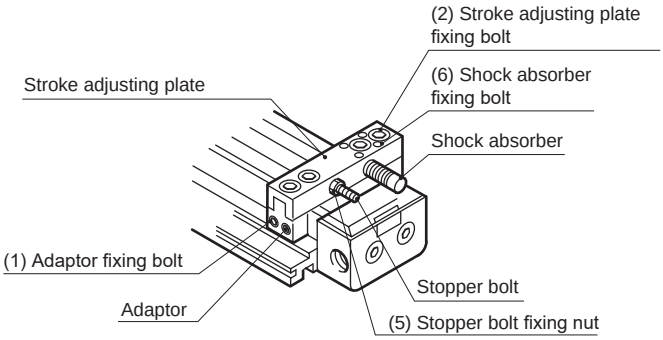

(1) Moving the stroke adjusting unit

● Loosen the adaptor fixing bolt and the stroke adjusting plate fixing bolt to move the stroke adjusting unit.

(2) Fixing the stroke adjusting unit

● After moving the stroke adjusting unit to the desired position, tighten the adaptor fixing bolt and the stroke adjusting plate fixing bolt with the value in Table 1 to fix the unit.

Table 1 Tightening torque of adaptor fixing bolt and stroke adjusting plate fixing bolt

Tightening torque / Model	Adaptor fixing bolt N·m	Stroke adjusting plate fixing bolt N·m
SRM3-25	6.2 to 7.6	6.2 to 7.6
SRM3-32	6.2 to 7.6	6.2 to 7.6
SRM3-40	10.4 to 12.8	10.4 to 12.8
SRM3-63	19.4 to 23.8	19.4 to 23.8

● To fix the stroke adjusting plate, tighten the fixing bolt with no gap between the adaptor and tube. Then tighten the adaptor fixing bolt.

(3) Adjusting the stroke with a stopper bolt

To adjust the stroke, loosen the stopper bolt fixing nut and turn the stopper bolt. After adjustment, tighten the stopper bolt fixing nut with the value in Table 2 or Table 3 to fix the stopper bolt.

Table 2 Tightening torque of stopper bolt fixing nut and shock absorber fixing nut of model with standard shock absorber (SRM3-**-A, A1 and A2)

Tightening torque / Model	Stopper bolt fixing nut N·m	Shock absorber fixing nut N·m
SRM3-25-A	4.5 to 6	4.6 to 6
SRM3-32-A	9 to 12	7.5 to 10
SRM3-40-A	22 to 30	22 to 30
SRM3-63-A	110 to 143	55 to 70

Table 3 Tightening torque of stopper bolt fixing nut and shock absorber fixing nut of model with light-load shock absorber (SRM3-**-E, E1 and E2)

Tightening torque / Model	Stopper bolt fixing nut N·m	Shock absorber fixing bolt N·m
SRM3-25-E	4.5 to 6	1 to 1.2
SRM3-32-E	4.5 to 6	1 to 1.2
SRM3-40-E	9 to 12	2.3 to 2.8
SRM3-63-E	22 to 30	4.6 to 5.6

(4) Adjusting the shock absorber

● With standard shock absorber

Change the operational stroke of the shock absorber to adjust its absorbed energy.
To adjust the operational stroke of the shock absorber, loosen the shock absorber fixing nut and turn the shock absorber. After adjustment, tighten the shock absorber fixing nut with the value in Table 2 to fix the shock absorber.
Because the gap between the shock absorber and the stopper bolt is narrow, it is recommended to remove the stroke adjusting plate for adjustment.

● With light-load shock absorber

Tighten the shock absorber fixing bolt with the value in Table 3.
If tightening too much has deformed the split part, screw a bolt into the thread part in the figure below to loosen the split part.

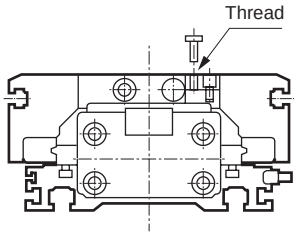

Model	Thread size
SRM3-25	M3
SRM3-32	M3
SRM3-40	M3
SRM3-63	M3

■ Do not perform electric welding after installing the rodless cylinder.

⚠ CAUTION

Otherwise electric current passes into the cylinder and causes sparks between the dust-proof belt and cylinder tube, which will damage the dust-proof belt.

■ The cylinder body may be damaged or may malfunction if a unit with excessive inertia, etc., is moved. Use within the allowable range.

■ Do not apply strong impact or excessive moment to the table.

■ Carefully match the centers when connecting a load with an external guide mechanism.

● Displacement of the shaft center increases as the stroke becomes longer. Carefully decide the connection method (floating) so that the displacement can be absorbed.

SCP*3
CMK2
CMA2
SCM
SCG
SCA2
SCS2
CKV2
CAV2/COVP/N2
SSD2
SSG
SSD
CAT
MDC2
MVC
SMG
MSD/MSDG
FC*
STK
SRL3
SRG3
SRM3
SRT3
MRL2
MRG2
SM-25
ShkAbs
FJ
FK
Spd Contr
Ending

■ Keep moment, including inertia force caused by load transfer or stop, within the allowable load. Damage will occur if this value is exceeded.

(When the overhang load is large)

- When the overhang load is large and the cylinder is stopped at both ends by the piston, load inertia causes bending moment even if the energy is within the allowable absorbed energy of the internal cushion.
  If the kinetic energy is large and an external cushion is used, adjust so that the cylinder contacts with the center of gravity of workpiece or the closest point to it.

(When an external stopper is used)

- When using an external stopper, make a selection considering bending moment due to the cylinder thrust.
- Moment that operates when the cylinder stops with an external stopper

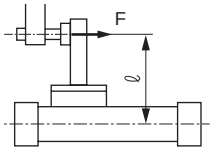

$M1 = F \cdot \ell$

F : Cylinder thrust
ℓ : Length from the center of the cylinder to the stopper

■ Do not damage the surface flatness by denting or scratching the body (tube) mounting surface or the table mounting surface.

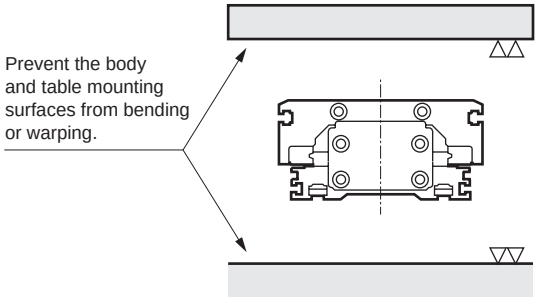

■ Piping port position and operating direction

● Option code (blank, R, B, T)

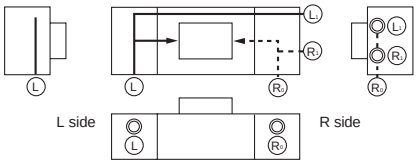

Ⓡ indicates the pressurized ports on Ⓡ side and Ⓛ indicates the pressurized ports on Ⓛ side. When the product is shipped from the factory, ports other than one each of Ⓡ and Ⓛ are sealed with plugs. Remove the plugs when piping to the plugged ports. Bottom piping is not possible. If bottom piping is necessary, select the option (D or S). $Ⓛ_1$ port is available only for ø25, ø32 and ø40.
$Ⓛ_1$ port is not available for ø63.

● Option (D, S) (bottom piping)

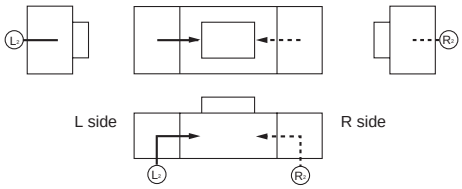

Ⓡ indicates the pressurized ports on R side and Ⓛ indicates the pressurized ports on L side. There are no ports for piping other than $Ⓡ_2$ and $Ⓛ_2$.

■ Main body mounting

SRM3 can be installed in two directions as shown in the figure below. In addition, the T-groove enables flexible installation on the side surface. At that time, allow for level adjustment so that you can complete installation easily.

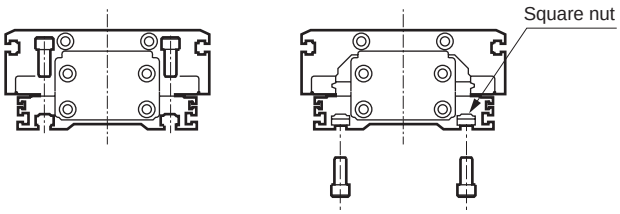

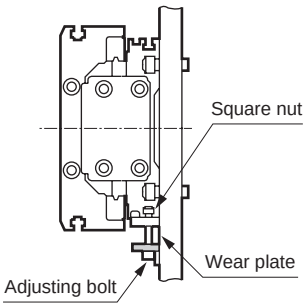

■ T-groove and square nuts

SRM3 has a T-groove where the square nuts can fit. The square nuts in the table below are supplied with the product as accessories.

● Accessory square nuts (8 each)

Model	Accessory square nut	
SRM3-25	M4	M5
SRM3-32	M4	M6
SRM3-40	M4	M8
SRM3-63	M5	M10

● The following dimensions are recommended for bolt length for T-groove (R).

mm

Model	WA	WB	WC
SRM3-25	M4 ℓ=t+6	-	M5 ℓ=t+6
SRM3-32	M4 ℓ=t+6	-	M6 ℓ=t+8
SRM3-40	M4 ℓ=t+6	M4 ℓ=t+6	M8 ℓ=t+10
SRM3-63	M5 ℓ=t+7	M5 ℓ=t+7	M10 ℓ=t+12

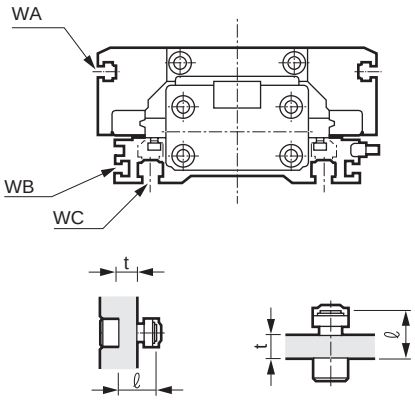

[Applications of table T-groove]

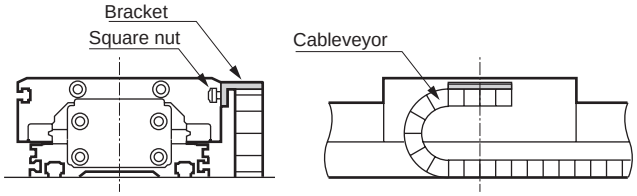

■ CKD's shock absorber is a repair part.
Replace when the energy absorption performance has degraded or the operation is not smooth.

2. Position locking SRM3-Q

⚠ WARNING

■ How to adjust the stroke adjusting unit

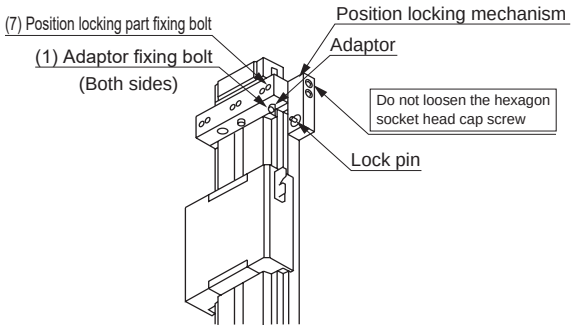

Loosen the (7) position locking part fixing bolt in the figure above to adjust the stroke. Do not loosen the hexagon socket head cap screw on the side in the figure above. Otherwise the position locking part lock pin will be displaced.

- Loosen the adaptor fixing bolt to move the position locking mechanism.
  The type with shock absorber (A, A1, E or E1) should be used in this case. Using the shock absorber to perform fine adjustment of the stroke will displace the position locking mechanism, which prevents secure locking. Therefore, use the adaptor fixing bolt for fine adjustment.
- After moving it to the desired position, tighten the adaptor fixing bolt with the value in the table below. If tightened with a value less than that in the table below, the position locking mechanism may be displaced.
- When setting a load, make sure to check that the lock mechanism functions before installing the product.

■ Piping

Model	(1) Adaptor fixing bolt tightening torque (7) Position locking part fixing bolt tightening torque
SRM3-Q-25	6.2 to 7.6
SRM3-Q-32	6.2 to 7.6
SRM3-Q-40	10.4 to 12.8
SRM3-Q-63	19.4 to 23.8

- Piping to the position locking mechanism is necessary.

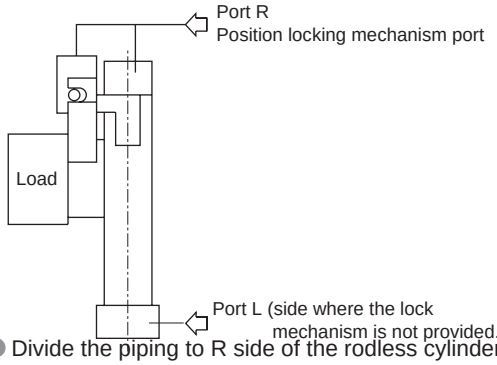

- Divide the piping to R side of the rodless cylinder using a tee fitting, etc., and with the same kind of pipe, connect the piping to the position locking mechanism.
- When the piping to the position locking mechanism is long and thin, or when the speed controller is far away from the cylinder port, note that it takes time to engage the lock. Clogging in the silencer mounted on the EXH port of the valve may cause the same result.

■ Supply pressure equal to or higher than the min. working pressure to the position locking mechanism port.

■ Manual release
- Push in the lock pin of position locking mechanism using a stick. At this time, make sure to supply pressure to port L, and before unlocking, check that load is not applied to the lock mechanism.
- If pressure is supplied to port R when both ports R and L are exhausted and the piston is locked, the lock may be unlocked and the table may pop out. This can be extremely hazardous.

■ Valves
- Keeping the cylinder with pressure applied to the lock mechanism may cause the lock pin to come off, which is very dangerous. Do not use 3-position closed center and 3-position P/A/B connection valves.
- If back pressure is applied to the locking mechanism, the lock may be released. Use a discrete valve, or use an individual exhaust manifold.
- For usage where the drop rate is increased using the quick exhaust valve, the lock may not release normally because the cylinder body starts operating before the lock pin.
  For the position locking cylinder, do not use the quick exhaust valve.

Use/maintenance

1. Common

⚠ CAUTION

■ The guide of SRM3 Series is already adjusted to the optimum pressure when shipped.
Do not adjust the pressurization unnecessarily.

■ Apply lithium grease to the guide of SRM3 Series when it reaches approximately 100 km of travel distance in normal use (approximately 6 months).
Recommended grease gun
Grease gun unit MG70 (THK)
Nozzle shape P type

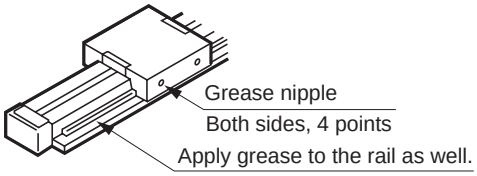

2. Position locking SRM3-Q

⚠ WARNING

■ For safety purposes, prevent the load from falling under its own weight during maintenance.

■ In the case of the cylinder with air cushion, if the air cushion needle at the lock mechanism side is tightened excessively, the piston bounds at the stroke end, the lock lever contacts the lock pin violently and the lock mechanism may be damaged. Also, if the air cushion needle is opened too much, the piston bounces off at the stroke end, which may similarly damage the mechanism. Adjust the needle of the air cushion so that there is no bound.
When stopping the piston with an external buffer device (shock absorber, etc.), adjust it similarly so that there is no bound.
Inspect the piston once or twice a year to make sure there is no damage to the retainer caused by this phenomenon.

⚠ CAUTION

■ After the lock mechanism is manually operated, make sure to confirm manual operation and return the mechanism to the original state before use. Do not perform manual operation except for adjustment, as it is dangerous.

■ When mounting or adjusting the cylinder, release the lock. If mounting work, etc., is done while the lock is engaged, the lock part may be damaged.

■ Do not use multiple synchronized cylinders. Do not use so that 1 workpiece is moved by synchronizing 2 or more position locking cylinders. Lock release may fail for one of the cylinders.

■ Use the speed controller with meter-out. If the meter-in control is used, the lock may not be able to be released.

■ At the side where the lock mechanism is attached, be sure to use the cylinder from the stroke end. If the cylinder piston does not reach the stroke end, the lock may not be engaged or the lock may not be able to be released.

■ Apply grease regularly to the sliding part of the lock lever.

SRT3

Rodless cylinder with brake

ø12/ø16/ø20/ø25
ø32/ø40/ø50/ø63

Overview

A reliable, compact brake unit is integrated into the ø12 to ø63 rodless cylinder (SRL3) series.

Features

Easy brake release
Simply return the brake plate to the original angle with a flathead screwdriver to release the brake.

No more complicated piping
Simply pipe to the end flange to supply pneumatic pressure to the brake. No movable piping (e.g., cableveyor) is necessary.

Simple structure
This simple structure has very few components in the brake section.

Space saving
The brake unit is short, compact and space-saving.

Repeat stopping accuracy ±1.5 mm (with no load 300 mm/s)
Brake is highly durable and lasts longer.

CONTENTS

Series variation	1704
Product introduction	1704
● Double acting (SRT3)	1706
Selection guide	1721
⚠ Safety precautions	1726

The cylinder switches T2YH, T2YV, T3YH, and T3YV are scheduled for end of production at the end of December 2023.

Rodless cylinder with brake SRT3 Series

Variation	Model No.	Bore size (mm)	Stroke (mm)							
			200	300	400	500	600	700	800	
Double acting	SRT3	ø12 equivalent/ø16 equivalent/ø20 equivalent	●	●	●	●	●	●	●	
		ø25 equivalent/ø32 equivalent/ø40 equivalent	●	●	●	●	●	●	●	
		ø50 equivalent/ø63 equivalent	●	●	●	●	●	●	●	

Product introduction

● New brake mechanism equipped

Newly adopted swash-plate brake mechanism provides high durability and powerful holding force (equivalent to cylinder thrust at 0.6 MPa).

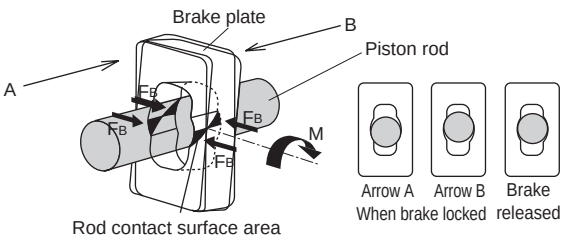

Applying torque M to the brake plate generates axial force F_B for rod holding. This mechanism can ensure high durability and powerful holding force.

● Easy brake release

Simply return the brake plate to the original angle with a flathead screwdriver to release the brake.

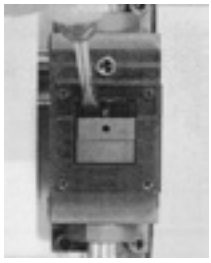

● No more complicated piping work

Simply pipe to the end flange to supply pneumatic pressure to the brake. No movable piping (e.g., cableveyor) is necessary.

● Simple structure

This simple structure has very few components in the brake section.

● Space saving

The brake unit is short, compact and space-saving.

●: Standard, ◎: Option, ▭ : Not available

			Min. stroke (mm)	Max. stroke (mm)	Custom stroke (per mm)	Mounting		Cushion				Option	Switch	Page
						Basic	Axial foot	Both sides cushioned	R side cushioned	L side cushioned	Without cushion	Floating fitting		
	900	1000				00	LB	B	R	L	N	Y		
	●	●		1000		●	●	●	●	●	●	◎	◎	
	●	●	1	1500	1	●	●	●	●	●	●	◎	◎	1706
	●	●		2000		●	●	●	●	●	●	◎	◎	

*1: ◎ in the type without switch. Not available for the type with switch.

● Switches mountable

Various cylinder switches including proximity and reed switches can be mounted.

M*V

M*H

● Proximity - 2-wire
M2V/H
● Proximity - 3-wire
M3V/H
● Reed - 2-wire
M0V/H, M5V/H
● 2-color LED proximity - 2-wire
M2WV, T2WV/H, T2YV/H
● 2-color LED proximity - 3-wire
M3WV, T3WV/H, T3YV/H
● Strong magnetic field
T2YD, T2YDT

Operational principle

Brake activated

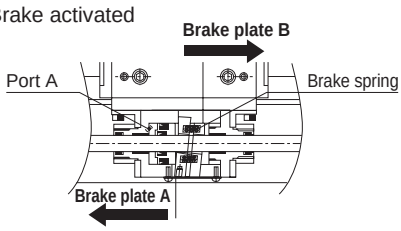

When air is exhausted from port Ⓐ, the brake plates Ⓐ and Ⓑ are pushed and tilted in the direction of the arrow, with Ⓐ and Ⓑ serves as a fulcrum of each other. This mechanism and the cylinder thrust amplify the brake force to securely hold the piston rod.

Brake released

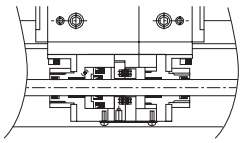

When air is supplied from port Ⓐ, the brake plates Ⓐ and Ⓑ are pushed by the release piston. The brake plates Ⓐ and Ⓑ become perpendicular to the piston rod, causing a clearance between each other, and the piston rod is released.

Brake released manually

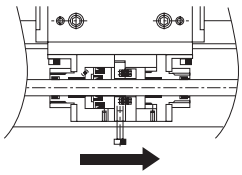

Remove the cover, screw the hexagon socket head cap screw into the brake plate Ⓐ and turn it in the direction of the arrow. The brake plates Ⓐ and Ⓑ become horizontal and the piston rod is released. (Alternatively, return the brake plate to the original angle with a flathead screwdriver to release the brake.)

SCP*3
CMK2
CMA2
SCM
SCG
SCA2
SCS2
CKV2
CAV2/COVP/N2
SSD2
SSG
SSD
CAT
MDC2
MVC
SMG
MSD/MSDG
FC*
STK
SRL3
SRG3
SRM3
SRT3
MRL2
MRG2
SM-25
ShkAbs
FJ
FK
Spd Contr
Ending

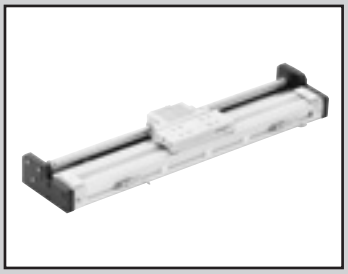

Rodless cylinder with brake

SRT3 Series

● Bore size: ø12, ø16, ø20, ø25, ø32
ø40, ø50, ø63 or equiv.

RoHS CAD

Specifications

Item			SRT3							
Bore size		mm	ø12	ø16	ø20	ø25	ø32	ø40	ø50	ø63
Actuation			Double acting							
Working fluid			Compressed air							
Max. working pressure		MPa	0.7 (≈100 psi, 7 bar)							
Min. working pressure	Cylinder	MPa	0.2 (≈29 psi, 2 bar)			0.15 (≈22 psi, 1.5 bar)			0.1 (≈15 psi, 1 bar)	
	Brake section	MPa	0.3 (≈44 psi, 3 bar) (Note)							
Proof pressure		MPa	1.05 (≈150 psi, 10.5 bar)							
Ambient temperature		°C	5 (41°F) to 60 (140°F)							
Port size	Cylinder		M5		Rc1/8		Rc1/4		Rc3/8	
	Brake section		M5		Rc1/8					
Stroke tolerance		mm	$^{+2.0}_{0}$(up to 1000), $^{+2.5}_{0}$(up to 2000)							
Working piston speed		mm/s	50 to 1000							
Cushion			Air cushion							
Lubrication			Not required (use turbine oil class 1 ISO VG32 if necessary for lubrication)							
Holding force		N	66	118	184	288	483	754	1178	1870

Note: The min. working pressure of the brake is a value when a good load balance is achieved.

Allowable absorbed energy

Bore size (mm)	Cushioned		Without cushion
	Max absorbed energy (J)	Cushion stroke (mm)	Max absorbed energy (J)
ø12 or equiv.	0.03	14.5	0.003
ø16 or equiv.	0.22	19.2	0.007
ø20 or equiv.	0.59	22.2	0.010
ø25 or equiv.	1.40	20.9	0.015
ø32 or equiv.	2.57	23.5	0.030
ø40 or equiv.	4.27	23.9	0.050
ø50 or equiv.	9.13	24.9	0.072
ø63 or equiv.	17.4	29.6	0.138

Stroke

Bore size (mm)	Standard stroke (mm)	Max. stroke (mm)	Min. stroke (mm)
ø12 or equiv.	200/300 400/500 600/700 800/900 1000	1000	1
ø16 or equiv.			
ø20 or equiv.			
ø25 or equiv.		1500	
ø32 or equiv.			
ø40 or equiv.			
ø50 or equiv.		2000	
ø63 or equiv.			

* The custom stroke is available in 1 mm increments.

Number of installed M-switches and min. stroke (mm)

Switch quantity	1		2		3		4		5		6		7		8		9	
Switch model No. / Bore size (mm)	M*V	M*H	M*V	M*H	M*V	M*H	M*V	M*H	M*V	M*H	M*V	M*H	M*V	M*H	M*V	M*H	M*V	M*H
ø12 or equiv.	10	10	30	45	60	90	90	135	120	180	150	225	180	270	210	315	240	360
ø16 or equiv.	10	10	30	45	60	90	90	135	120	180	150	225	180	270	210	315	240	360
ø20 or equiv.	10	10	30	45	60	90	90	135	120	180	150	225	180	270	210	315	240	360
ø25 or equiv.	10	10	30	45	60	90	90	135	120	180	150	225	180	270	210	315	240	360
ø32 or equiv.	10	10	30	45	60	90	90	135	120	180	150	225	180	270	210	315	240	360
ø40 or equiv.	10	10	30	45	60	90	90	135	120	180	150	225	180	270	210	315	240	360
ø50 or equiv.	15	15	30	45	60	90	90	135	120	180	150	225	180	270	210	315	240	360
ø63 or equiv.	15	15	30	45	60	90	90	135	120	180	150	225	180	270	210	315	240	360

Number of installed T-switches and min. stroke (mm)

Switch quantity	1		2		3		4		5		6		7		8		9	
Switch model No. / Bore size (mm)	T*V	T*H	T*V	T*H	T*V	T*H	T*V	T*H	T*V	T*H	T*V	T*H	T*V	T*H	T*V	T*H	T*V	T*H
ø12 or equiv.	5	5	45	50	90	100	135	150	180	200	225	250	270	300	315	350	360	400
ø16 or equiv.	5	5	45	50	90	100	135	150	180	200	225	250	270	300	315	350	360	400
ø20 or equiv.	5	5	45	50	90	100	135	150	180	200	225	250	270	300	315	350	360	400
ø25 or equiv.	10	10	45	50	90	100	135	150	180	200	225	250	270	300	315	350	360	400
ø32 or equiv.	10	10	45	50	90	100	135	150	180	200	225	250	270	300	315	350	360	400
ø40 or equiv.	10	10	45	50	90	100	135	150	180	200	225	250	270	300	315	350	360	400
ø50 or equiv.	10	10	45	50	90	100	135	150	180	200	225	250	270	300	315	350	360	400
ø63 or equiv.	10	10	45	50	90	100	135	150	180	200	225	250	270	300	315	350	360	400

Switch specifications (M-switch)

● 1-color/2-color LED

Item	2-wire proximity		3-wire proximity		
	M2V,M2H	M2WV (2-color LED)	M3H/M3V	M3PH/M3PV (made to order)	M3WV
Applications	Dedicated for programmable controller		For programmable controller, relay, IC circuit, compact solenoid valve		
Output method	-		NPN output	PNP output	NPN output
Power supply voltage	-		4.5 to 28 VDC		10 to 28 VDC
Load voltage	10 to 30 VDC		30 VDC or less		
Load current	5 to 30 mA		100 mA or less	100 mA or less	100 mA or less
Indicator	LED (Lit when ON)	Red/green LED (Lit when ON)	LED (Lit when ON)	Yellow LED (Lit when ON)	Red/green LED (Lit when ON)
Leakage current	1 mA or less		10 μA or less	0.05 mA or less	10 μA or less
Weight g	1 m:22 3 m:57 5 m:93				

Item	2-wire reed			
	M0V, M0H		M5V, M5H	
Applications	Programmable controller, relay		For programmable controller, relay, IC circuit (without indicator lamp), serial connection	
Power supply voltage	-		-	
Load voltage	12/24 VDC	110 VAC	5/12/24 VDC	110 VAC or less
Load current	5 to 50 mA	7 to 20 mA	50 mA or less	20 mA or less
Indicator	LED (Lit when ON)		No indicator lamp	
Leakage current	0 mA			
Weight g	1 m:22 3 m:57 5 m:93			

*1: Refer to Ending Page 1 for detailed switch specifications and dimensions.

Switch specifications (T-switch)

● 2-color LED

Item	2-wire proximity		3-wire proximity	
	T2YH/T2YV	T2WH/T2WV	T3YH/T3YV	T3WH/T3WV
Applications	Dedicated for programmable controller		For programmable controller, relay	
Output method	-		NPN output	NPN output
Power supply voltage	-		10 to 28 VDC	
Load voltage	10 to 30 VDC	24 VDC ±10%	30 VDC or less	
Load current	5 to 20 mA (*3)		50 mA or less	
Indicator	Red/green LED (Lit when ON)	Red/green LED (Lit when ON)	Red/green LED (Lit when ON)	Red/green LED (Lit when ON)
Leakage current	1 mA or less		10 μA or less	
Weight g	1 m:33 3 m:87 5 m:142	1 m:18 3 m:49 5 m:80	1 m:33 3 m:87 5 m:142	1 m:18 3 m:49 5 m:80

● For AC magnetic field

Item	Proximity switch
	T2YD,T2YDT (*4)
Applications	Dedicated for programmable controller
Indicator	Red/green LED (Lit when ON)
Load voltage	24 VDC ±10%
Load current	5 to 20 mA
Internal voltage drop	6V or less
Leakage current	1.0 mA or less
Weight g	1 m:61 3 m:166 5 m:272

*1: Refer to Ending Page 1 for detailed switch specifications and dimensions.
*2: Switches other than the above models, such as switches with connectors, are also available. Refer to Ending Page 1.
*3: The max. load current is 20 mA at 25°C. The current is lower than 20 mA if the operating ambient temperature around the switch is higher than 25°C.
(5 to 10 mA at 60°C)
*4: AC magnetic field proof switch (T2YD/T2YDT) cannot be used in DC magnetic field.

Cylinder weight

Unit: kg

Bore size (mm)	Weight for 0 mm stroke			Mounting bracket weight		Additional weight per St = 100 mm
	Basic (00)	Foot (LB)	Switch weight	T type	M type	
ø12 or equiv.	0.83	0.84	Refer to the weight in the switch specifications.	0.005	0.001	0.18
ø16 or equiv.	0.95	0.96				0.21
ø20 or equiv.	1.17	1.19				0.26
ø25 or equiv.	2.24	2.34				0.43
ø32 or equiv.	3.8	3.9				0.54
ø40 or equiv.	5.0	5.1				0.71
ø50 or equiv.	7.4	7.5				0.96
ø63 or equiv.	12.4	12.7				1.46

SCP*3
CMK2
CMA2
SCM
SCG
SCA2
SCS2
CKV2
CAV2/COVP/N2
SSD2
SSG
SSD
CAT
MDC2
MVC
SMG
MSD/MSDG
FC*
STK
SRL3
SRG3
SRM3
SRT3
MRL2
MRG2
SM-25
ShkAbs
FJ
FK
Spd Contr
Ending

How to order

No switch (built-in magnet for switch)

SRT3 - 00 - 32 B - 200 ——— Y

With switch (built-in magnet for switch)

SRT3 - 00 - 32 B - 200 - M0H - R - Y

Ⓐ Mounting *1

Ⓑ Bore size

Ⓒ Cushion

Ⓓ Stroke

Ⓔ Switch model No. *3, *4

Ⓕ Switch quantity

Ⓖ Option

Code	Description
Ⓐ Mounting	
00	Basic
LB	Axial foot
Ⓑ Bore size (mm)	
12	ø12 or equiv.
16	ø16 or equiv.
20	ø20 or equiv.
25	ø25 or equiv.
32	ø32 or equiv.
40	ø40 or equiv.
50	ø50 or equiv.
63	ø63 or equiv.
Ⓒ Cushion	
B	Both sides cushioned
R	R side cushioned
L	L side cushioned
N	Without cushion

Ⓓ Stroke (mm)

Bore size	Stroke (*2)	Custom stroke
ø12 to ø20	**1 to 1000**	**In 1 mm increments**
ø25 to ø40	**1 to 1500**	
ø50, ø63	**1 to 2000**	

Ⓔ Switch model No.

Axial lead wire	Radial lead wire	Contact	Voltage AC	Voltage DC	Indicator	Lead wire
M0H*	**M0V***	Reed	●	●	1-color LED	2-wire
M5H*	**M5V***	Reed	●	●	No indicator lamp	2-wire
M2H*	**M2V***	Proximity		●	1-color LED	
-	**M2WV***	Proximity		●	2-color LED	2-wire
M3H*	**M3V***	Proximity		●	1-color LED	
-	**M3WV***	Proximity		●	2-color LED	3-wire
M3PH*	**M3PV***	Proximity		●	1-color LED (custom)	3-wire
T2WH*	**T2WV***	Proximity		●	2-color LED	2-wire
T2YH*	**T2YV***	Proximity		●	2-color LED	2-wire
T3WH*	**T3WV***	Proximity		●	2-color LED	3-wire
T3YH*	**T3YV***	Proximity		●	2-color LED	3-wire
T2YD*	**-**	Proximity		●	2-color LED AC magnetic field	2-wire
T2YDT*	**-**	Proximity		●	2-color LED AC magnetic field	2-wire

* Lead wire length	
Blank	1 m (standard)
3	3 m (option)
5	5 m (option)

Ⓕ Switch quantity	
R	1 on R side
L	1 on L side
D	2
T	3
4	4 (when there are more than 4 switches, indicate switch quantity.)

Ⓖ Option	
Y	Floating fitting

⚠ Precautions for model No. selection

*1 : Mounting bracket will be shipped assembled with the product.
*2 : Refer to page 1706 for the min. stroke with switch.
*3 : Switches other than Ⓔ Switch model No. are also available. (Made to order) Refer to Ending Page 1 for details.
*4 : Avoid environments where the cylinder is exposed to welding spatters. Be careful with T2YD and T2YDT in use.

[Example of model No.]

SRT3-00-32B-200-M0H-R-Y

Model: Rodless cylinder with brake

Ⓐ Mounting : Basic
Ⓑ Bore size : ø32 mm
Ⓒ Cushion : Both sides cushioned
Ⓓ Stroke : 200 mm
Ⓔ Switch model No. : Reed M0H switch
Ⓕ Switch quantity : 1 on R side
Ⓖ Option : Floating fitting

How to order switch

○ Switch body + mounting bracket set (*1)

SRL3 - M0H

Switch model No.
(Item Ⓔ on page 1708)

○ Switch body only

SW - M0H

Switch model No.
(Item Ⓔ on page 1708)

○ Mounting bracket set (*2)

· M-switch

SRL3 - M

· T-switch

SRL3 - T

○ Lead wire holder (*3)

SRL3 - MH

* Lead wire length	
Blank	1 m (standard)
3	3 m (option)
5	5 m (option)

(*1) "Switch body + mounting bracket set" does not include lead wire holders. Order lead wire holders separately if necessary.
(*2) The mounting bracket is different between the M-switch and T-switch.
(*3) The quantity of lead wire holders per set is 10.

How to order repair parts

SRL3 - 40 K - 200

Bore size
(Item Ⓑ on page 1708)

Stroke
(Item Ⓓ on page 1708)

Note: The switch mounting bracket, floating fitting and repair parts are common with those of SRL3.

How to order floating fitting set

SRL3 - 40 - Y

Bore size
(Item Ⓑ on page 1708)

(Mount, mount base, pin, plain washer, pan head machine screw with spring washer, four mounting bolts)

How to order mounting bracket

SRT3 - LB - 40

(Bracket x2, mounting bolt x4)

Bore size
(Item Ⓑ on page 1708)

Theoretical thrust table

(Unit: N)

Bore size (mm)	Operating direction	Working pressure MPa							
		0.1	0.15	0.2	0.3	0.4	0.5	0.6	0.7
ø12	Push/Pull	-	-	27.7	41.5	55.3	69.1	83.0	96.8
ø16	Push/Pull	-	-	43.2	64.8	86.4	$1.08x10^2$	$1.30x10^2$	$1.51x10^2$
ø20	Push/Pull	-	-	62.9	94.4	$1.26x10^2$	$1.57x10^2$	$1.89x10^2$	$2.20x10^2$
ø25	Push/Pull	-	81.4	$1.08x10^2$	$1.63x10^2$	$2.17x10^2$	$2.71x10^2$	$3.25x10^2$	$3.80x10^2$
ø32	Push/Pull	-	$1.22x10^2$	$1.63x10^2$	$2.44x10^2$	$3.26x10^2$	$4.07x10^2$	$4.88x10^2$	$5.70x10^2$
ø40	Push/Pull	-	$1.90x10^2$	$2.53x10^2$	$3.80x10^2$	$5.06x10^2$	$6.33x10^2$	$7.60x10^2$	$8.86x10^2$
ø50	Push/Pull	$1.99x10^2$	$2.98x10^2$	$3.98x10^2$	$5.96x10^2$	$7.95x10^2$	$9.94x10^2$	$1.19x10^3$	$1.39x10^3$
ø63	Push/Pull	$3.14x10^2$	$4.70x10^2$	$6.27x10^2$	$9.41x10^2$	$1.25x10^3$	$1.57x10^3$	$1.88x10^3$	$2.20x10^3$

SCP*3
CMK2
CMA2
SCM
SCG
SCA2
SCS2
CKV2
CAV2/ COVP/N2
SSD2
SSG
SSD
CAT
MDC2
MVC
SMG
MSD/ MSDG
FC*
STK
SRL3
SRG3
SRM3
SRT3
MRL2
MRG2
SM-25
ShkAbs
FJ
FK
Spd Contr
Ending

Internal structure and parts list (ø12 to ø63)

The internal structure of cylinder is SRL3. Refer to pages 1579 and 1580.

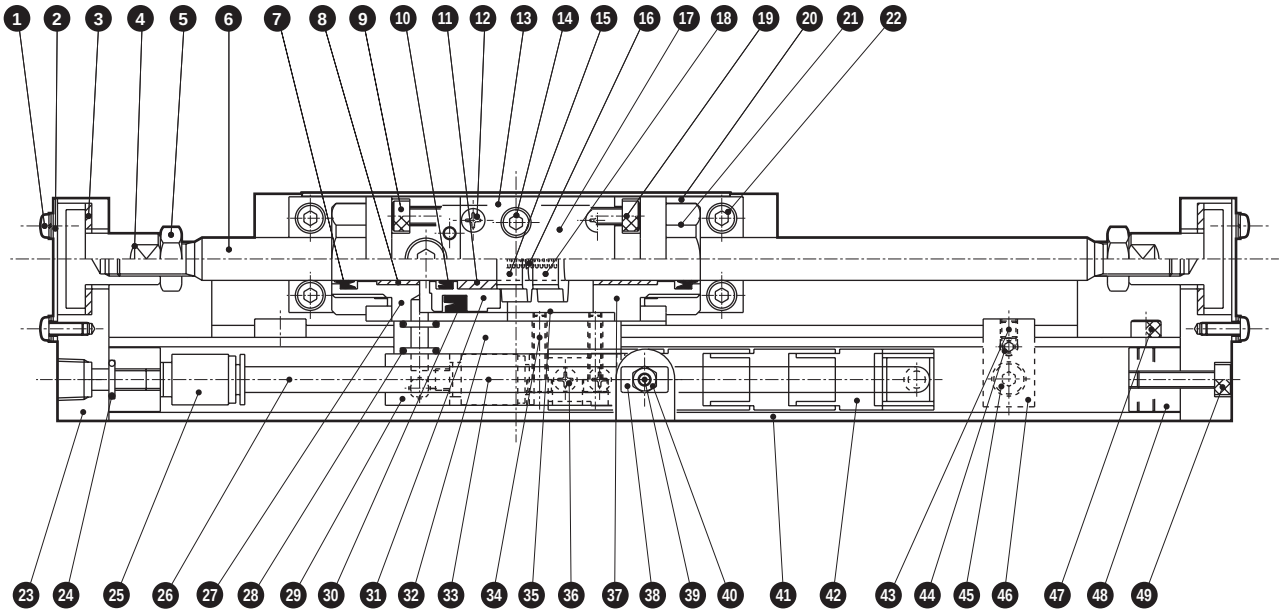

Brake section cannot be disassembled

Parts list

No.	Part name	Material	Remarks	No.	Part name	Material	Remarks
1	Pan head machine screw	Steel	Zinc chromate	27	Body A	Aluminum alloy	Alumite
2	Fitting cover	Aluminum alloy	Alumite	28	Gasket	Nitrile rubber	
3	Slide plate	Dry bearing		29	Adaptor	Aluminum alloy	Alumite
4	Floating fitting	Steel	Manganese phosphate treatment	30	Piston packing	Nitrile rubber	
5	Hexagon nut, three types	Steel	Zinc chromate	31	Release piston	Aluminum alloy	Alumite
6	Brake shaft	Steel	Industrial chrome plating	32	Spacer	Aluminum alloy	Alumite
7	Rod packing	Nitrile rubber		33	Push-in fitting		
8	Bearing bush	Dry bearing		34	Hexagon socket head cap screw	Steel	Black finish
9	Hexagon socket head cap screw	Steel	Black finish	35	Body B	Aluminum alloy	Alumite
10	Rod packing	Nitrile rubber		36	Pan head machine screw	Steel	Zinc chromate
11	Bearing bush	Copper-based		37	Brake end cover	Aluminum alloy	Alumite
12	Pan head machine screw	Steel	Zinc chromate	38	Square nut	Steel	Zinc chromate
13	Brake mounting base	Aluminum alloy	Alumite	39	Pan head machine screw	Steel	Zinc chromate
14	Hexagon socket head cap screw	Steel	Black finish	40	Hexagon nut, three types	Steel	Zinc chromate
15	Brake plate A	Special steel	Zinc chromate	41	Cable holder	Aluminum alloy	Alumite
16	Brake spring	Steel	Black finish	42	Cableveyor	Special resin	
17	Cover	Aluminum alloy	Alumite	43	ø12 to ø40: Hexagon socket set screw ø50, ø63: -	Steel -	Black finish -
18	Brake plate B	Special steel	Zinc chromate				
19	Hexagon socket head cap screw	Steel	Black finish	44	ø12 to ø40: Hexagon socket set screw ø50, ø63: Hexagon socket button head bolt	Steel	Black finish
20	Brake mounting foot	Steel	Zinc chromate				
21	Fixing nut	Steel	Zinc chromate	45	Hexagon socket button head bolt	Steel	Black finish
22	Hexagon socket head cap screw	Steel	Black finish	46	Rail stop plate	Steel	Zinc chromate
23	End flange	Aluminum alloy	Alumite	47	Hexagon socket head cap screw	Steel	Black finish
24	Gasket	Nitrile rubber		48	Cable holder stopper	Aluminum alloy	Alumite
25	Push-in fitting			49	Hexagon socket head cap screw	Steel	Black finish
26	Tube	Polyamide					

MEMO

SCP*3
CMK2
CMA2
SCM
SCG
SCA2
SCS2
CKV2
CAV2/ COVP/N2
SSD2
SSG
SSD
CAT
MDC2
MVC
SMG
MSD/ MSDG
FC*
STK
SRL3
SRG3
SRM3
SRT3
MRL2
MRG2
SM-25
ShkAbs
FJ
FK
Spd Contr
Ending

Dimensions (bore size: ø12, ø16, mounting: 00)

CAD

● With cylinder switch SRT3-00-**-***-M*V* (L-shaped lead wire)

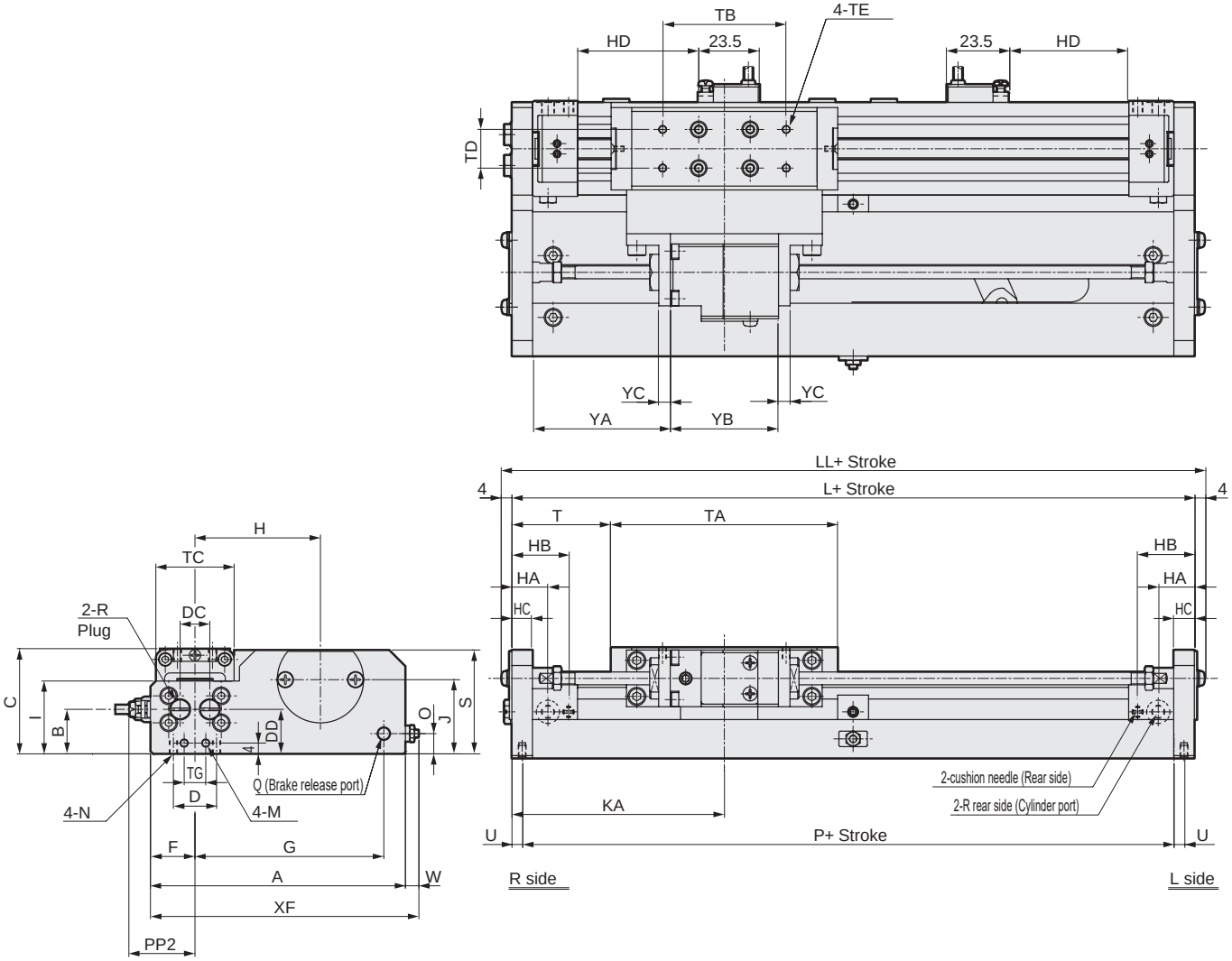

RD: Max. sensitivity installation position HD: Max. sensitivity installation position

Code / Bore size (mm)	A	B	C	D	DC	DD	F	G	H	HA	HB	HC	I	J	KA	L	LL	M	N	O	P	Q	R	S
ø12 or equiv.	94.5	16.5	39	16	11	16.5	16.5	70	46	14	22	8	27	27.5	76	152	160	M3 depth 5	M3 depth 6	8	144	M5	M5	39
ø16 or equiv.	98.5	18	43	20	12	18	18.5	72	48	14	22	8	30	31	82.5	165	173	M3 depth 5	M3 depth 6	8	157	M5	M5	42

Code / Bore size (mm)	T	TA	TB	TC	TD	TE	TG	U	W	XF	YA	YB	YC
ø12 or equiv.	35.5	81	42	29	13	M3 depth 5	8	4	5	99.5	47	42	8
ø16 or equiv.	38.5	88	48	32	15	M3 depth 5	12	4	5	99.5	53.5	42	8

Code	With switch																
Bore size (mm)	HD			RD			PA	PB			PP2						
	M*	T*Y*	T*W	M*	T*Y*	T*W		T*Y*	T2YD	T*W*	M*V	M*H	T*YV	T*YH	T2YD	T*WV	T*WH
ø12 or equiv.	40.5	36	32	60.5	65	69	24.3	35	34	33.5	24.5	23	26	23	28.4	20.7	17.2
ø16 or equiv.	47	42	38	67	72	76	26.3	35	34	33.5	26.5	25	28	25	30.4	22.7	19.2

Dimensions (bore size: ø12, ø16, mounting: 00)

● With cylinder switch SRT3-00-**-***-M*H* (straight lead wire)

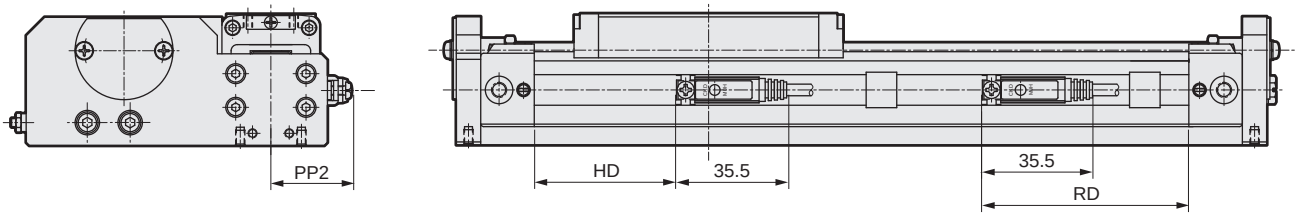

● With cylinder switch SRT3-00-**-***-T*H (T*W, T*Y, T2YD)

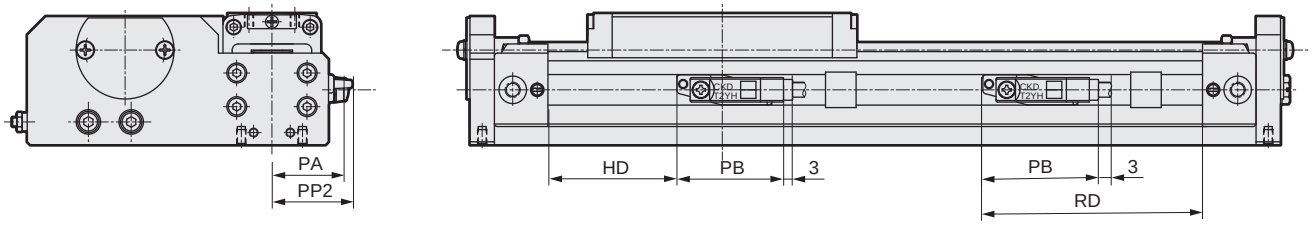

● With cylinder switch SRT3-00-**-***-T*V (T*W, T*Y)

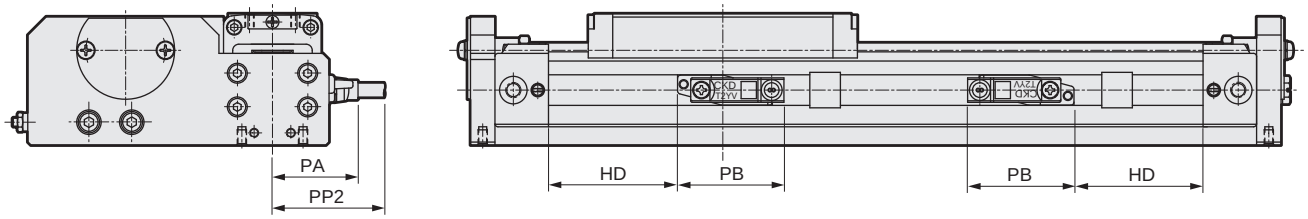

SCP*3
CMK2
CMA2
SCM
SCG
SCA2
SCS2
CKV2
CAV2/ COVP/N2
SSD2
SSG
SSD
CAT
MDC2
MVC
SMG
MSD/ MSDG
FC*
STK
SRL3
SRG3
SRM3
SRT3
MRL2
MRG2
SM-25
ShkAbs
FJ
FK
Spd Contr
Ending

Dimensions (bore size: ø20, mounting: 00)

● With cylinder switch SRT3-00-20-***-M*V* (L-shaped lead wire)

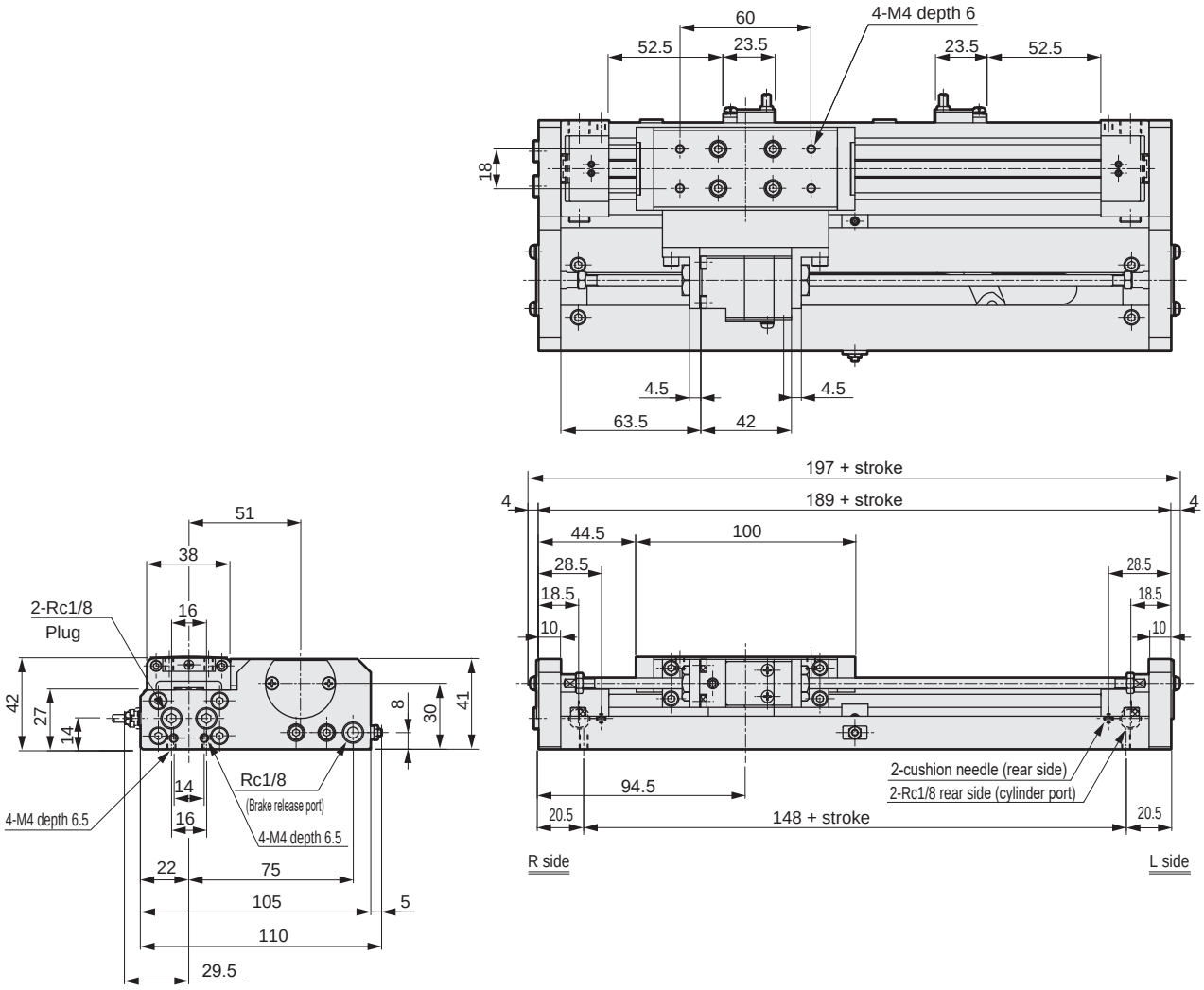

● With cylinder switch SRT3-00-20-***-M*H* (straight lead wire)

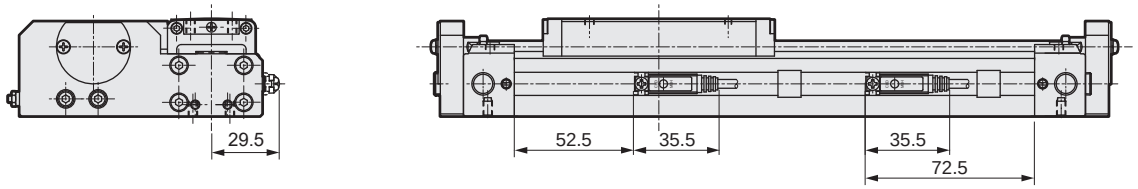

● With cylinder switch SRT3-00-20-***-T*H (T*W, T*Y, T2YD)

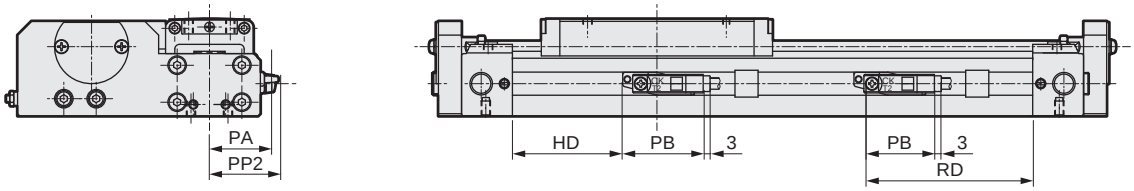

● With cylinder switch SRT3-00-20-***-T*V (T*W, T*Y)

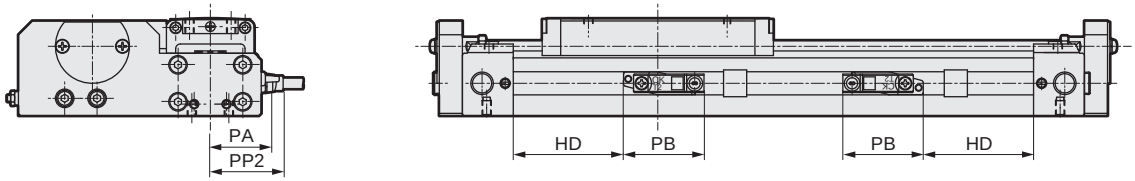

Dimensions (bore size: ø25, mounting: 00)

● With cylinder switch SRT3-00-25-***-M*V* (L-shaped lead wire)

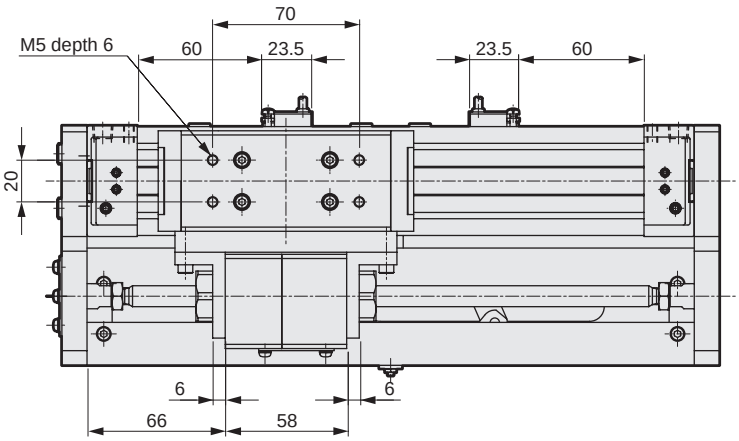

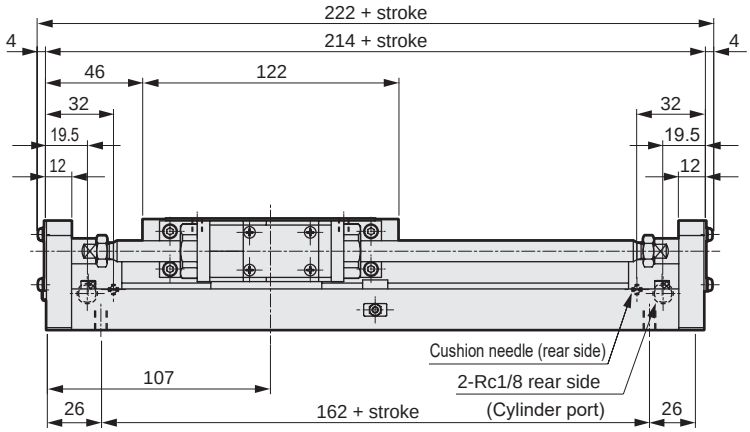

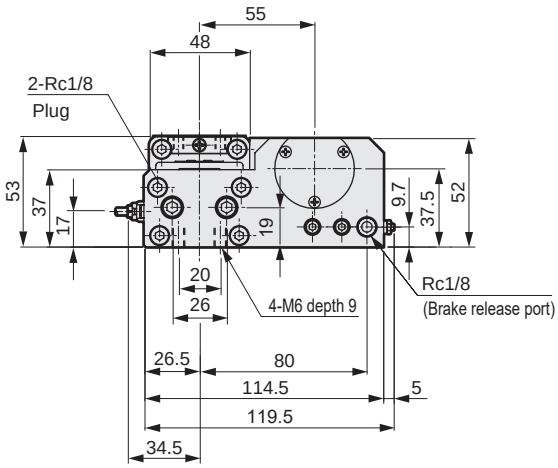

● With cylinder switch SRT3-00-25-***-M*H* (straight lead wire)

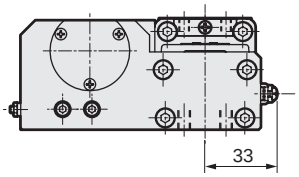

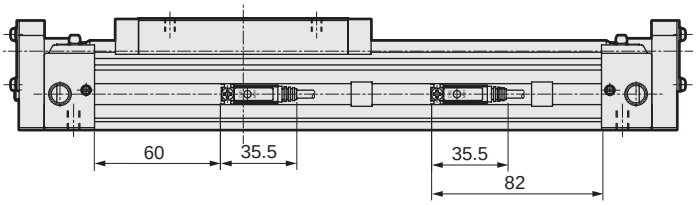

● With cylinder switch SRT3-00-25-***-T*H (T*W, T*Y, T2YD)

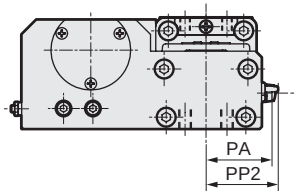

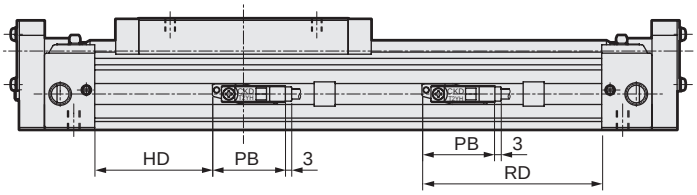

● With cylinder switch SRT3-00-25-***-T*V (T*W, T*Y)

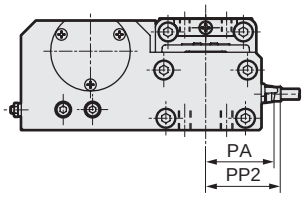

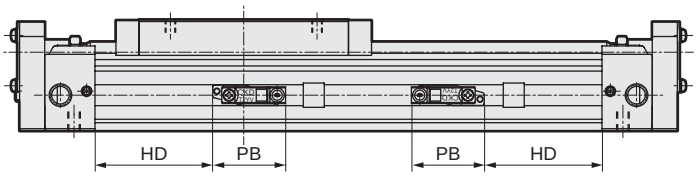

SCP*3
CMK2
CMA2
SCM
SCG
SCA2
SCS2
CKV2
CAV2/ COVP/N2
SSD2
SSG
SSD
CAT
MDC2
MVC
SMG
MSD/ MSDG
FC*
STK
SRL3
SRG3
SRM3
SRT3
MRL2
MRG2
SM-25
ShkAbs
FJ
FK
Spd Contr
Ending

Dimensions (bore size: ø32 to ø63, mounting: 00)

CAD

● With cylinder switch SRT3-00-**-***-M*V* (L-shaped lead wire)

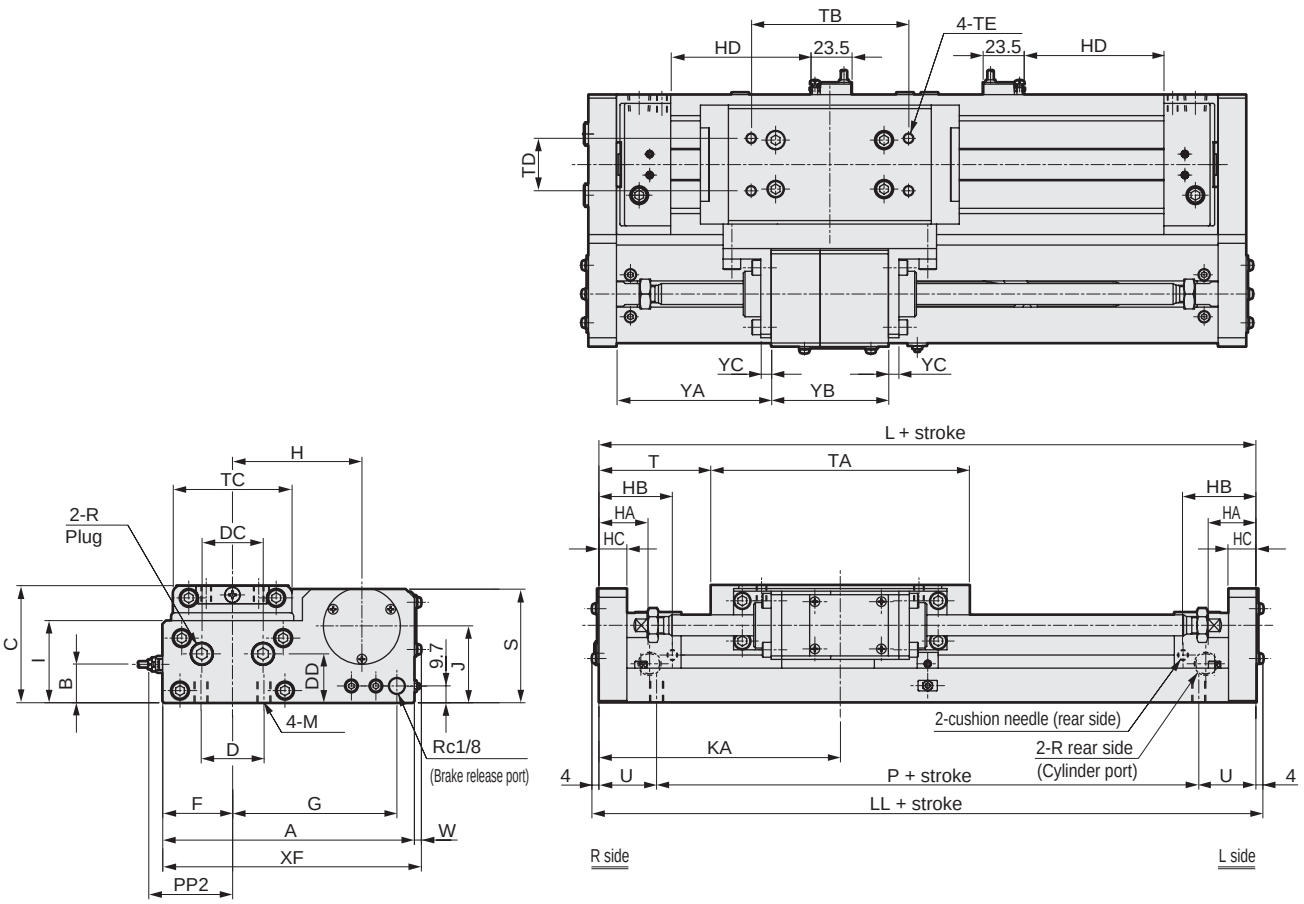

RD: Max. sensitivity installation position HD: Max. sensitivity installation position

Code / Bore size (mm)	A	B	C	D	DC	DD	F	G	H	HA	HB	HC	I	J	KA	L	LL	M	P	R	S	T
ø32 or equiv.	129	18.5	57	32	27	21	33	87	66	24	37.5	14	39	39	127	254	262	M6 depth 9	196	Rc 1/4	56	60
ø40 or equiv.	144	22	67	36	35	28	40	94	74	29	42	16	47	44	138	276	284	M8 depth 12	210	Rc 1/4	65	64
ø50 or equiv.	177	28	82	45	35	35	48	102	89	33	51	18	57	52	147	294	302	M8 depth 12	212	Rc 3/8	77	71
ø63 or equiv.	209	35	95	50	39	42	59	113	105	35	52	20	68	60	168	336	344	M10 depth 15	258	Rc 3/8	93	84

Code / Bore size (mm)	TA	TB	TC	TD	TE	U	W	XF	YA	YB	YC
ø32 or equiv.	134	80	56	20	M6 depth 7.5	29	4	133	78.5	69	6
ø40 or equiv.	148	90	68	30	M6 depth 9	33	4	148	88.5	67	6
ø50 or equiv.	152	100	80	30	M8 depth 10.5	41	4	181	92.5	73	8
ø63 or equiv.	168	110	102	40	M8 depth 11.5	39	1	210	98.5	99	9

Code	With switch																
Bore size (mm)	HD			RD			PA	PB			PP2						
	M*	T*Y*	T*W	M*	T*Y*	T*W		T*Y*	T2YD	T*W*	M*V	M*H	T*YV	T*YH	T2YD	T*WV	T*WH
ø32 or equiv.	74	70	66	96	100	104	41.3	35	34	33.5	41.5	40	43	40	45.4	37.7	34.2
ø40 or equiv.	80	76	72	102	106	110	48.3	35	34	33.5	48.5	47	50	47	52.4	44.7	41.2
ø50 or equiv.	79	75	71	101	105	109	56.3	35	34	33.5	56.5	55	58	55	60.4	52.7	49.2
ø63 or equiv.	98	94	90	120	124	128	67.3	35	34	33.5	67.5	66	69	66	71.4	63.7	60.2

Dimensions (bore size: ø32 to ø63, mounting: 00)

● With cylinder switch SRT3-00-**-***-M*H* (straight lead wire)

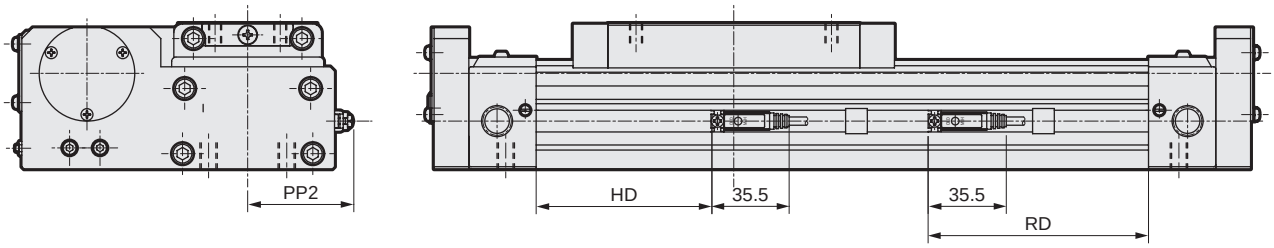

● With cylinder switch SRT3-00-**-***-T*H (T*W, T*Y, T2YD)

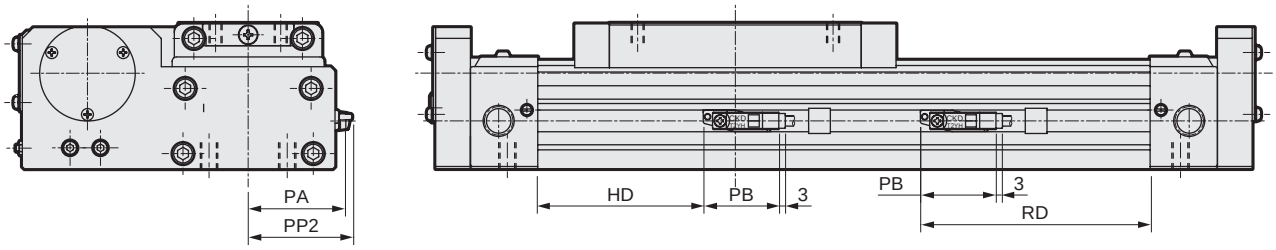

● With cylinder switch SRT3-00-**-***-T*V (T*W, T*Y)

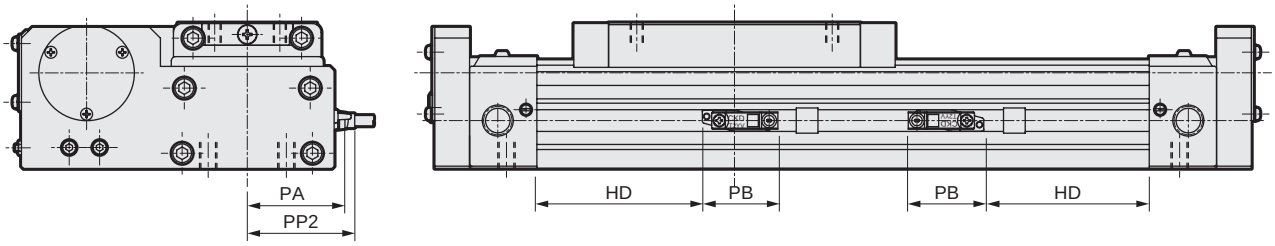

SCP*3
CMK2
CMA2
SCM
SCG
SCA2
SCS2
CKV2
CAV2/ COVP/N2
SSD2
SSG
SSD
CAT
MDC2
MVC
SMG
MSD/ MSDG
FC*
STK
SRL3
SRG3
SRM3
SRT3
MRL2
MRG2
SM-25
ShkAbs
FJ
FK
Spd Contr
Ending

Dimensions (bore size: ø12, ø16, mounting: LB)

CAD

● With foot bracket SRT3-LB-**-** *

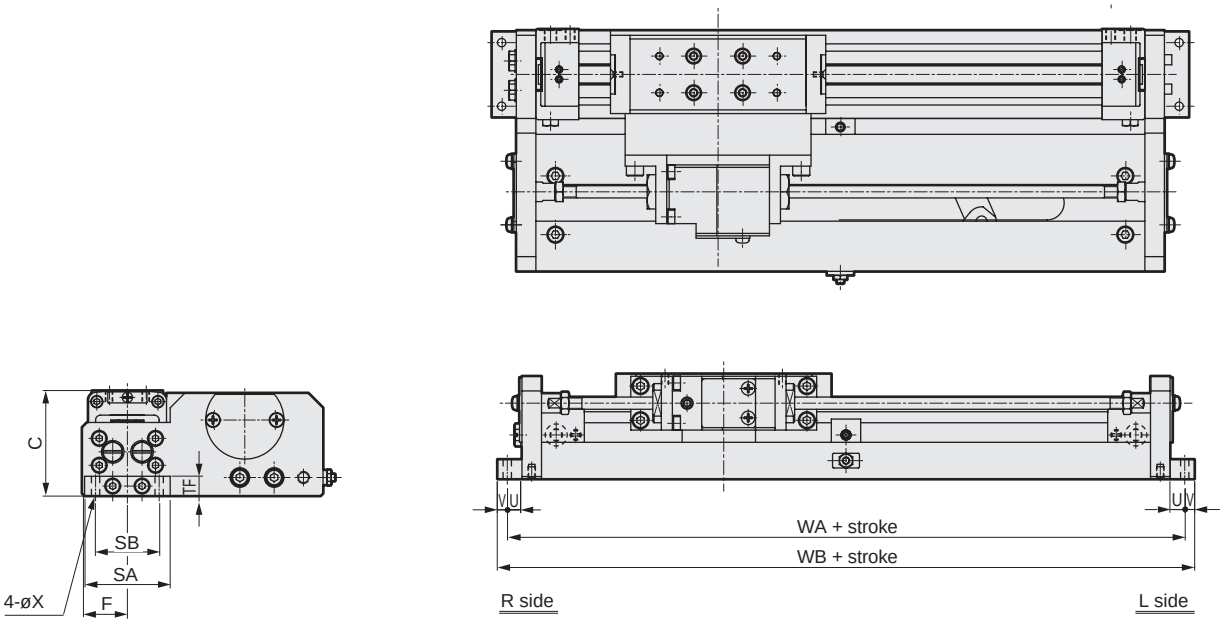

Code / Bore size(mm)	C	F	Mounting method							
			SA	SB	TF	U	V	X	WA	WB
ø12 or equiv.	39	16.5	32	24	8	6	4	3.4	164	172
ø16 or equiv.	43	18.5	35	26	8	6	4	3.4	177	185

Dimensions (bore size: ø20, mounting: LB)

CAD

● With foot bracket SRT3-LB-20-** *

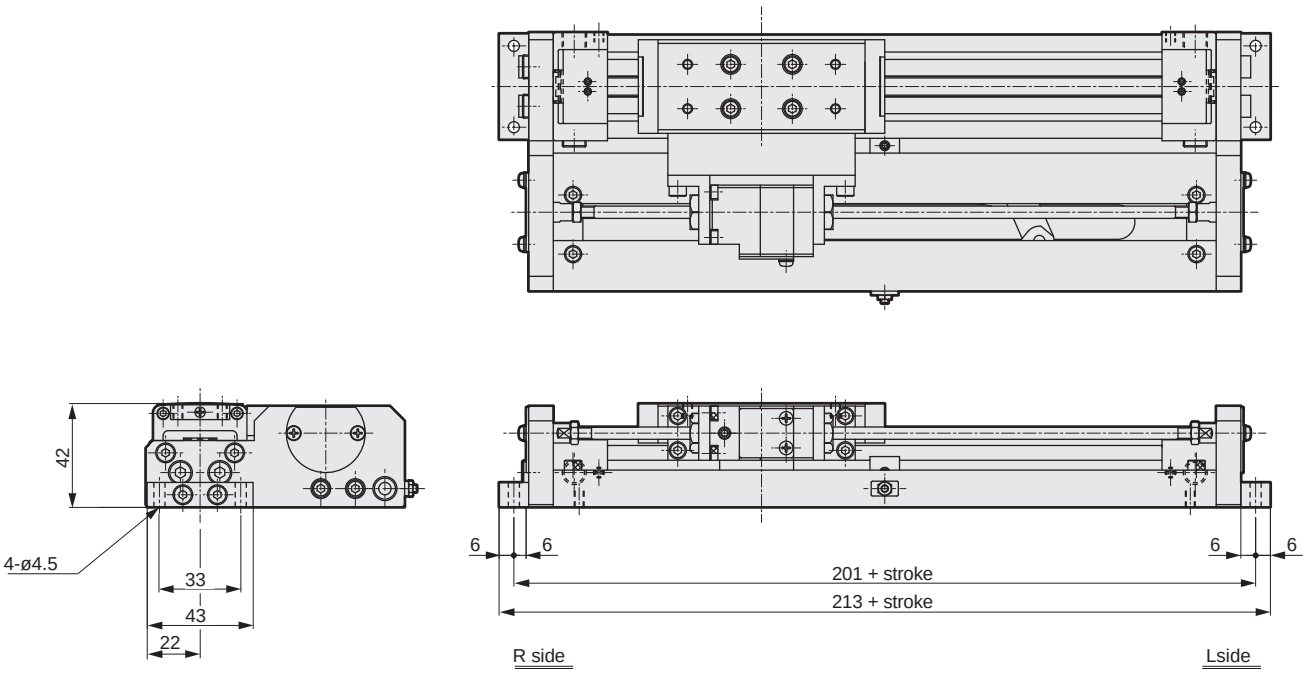

Dimensions (bore size: ø25, mounting: LB)

● With foot bracket SRT3-LB-25-** *

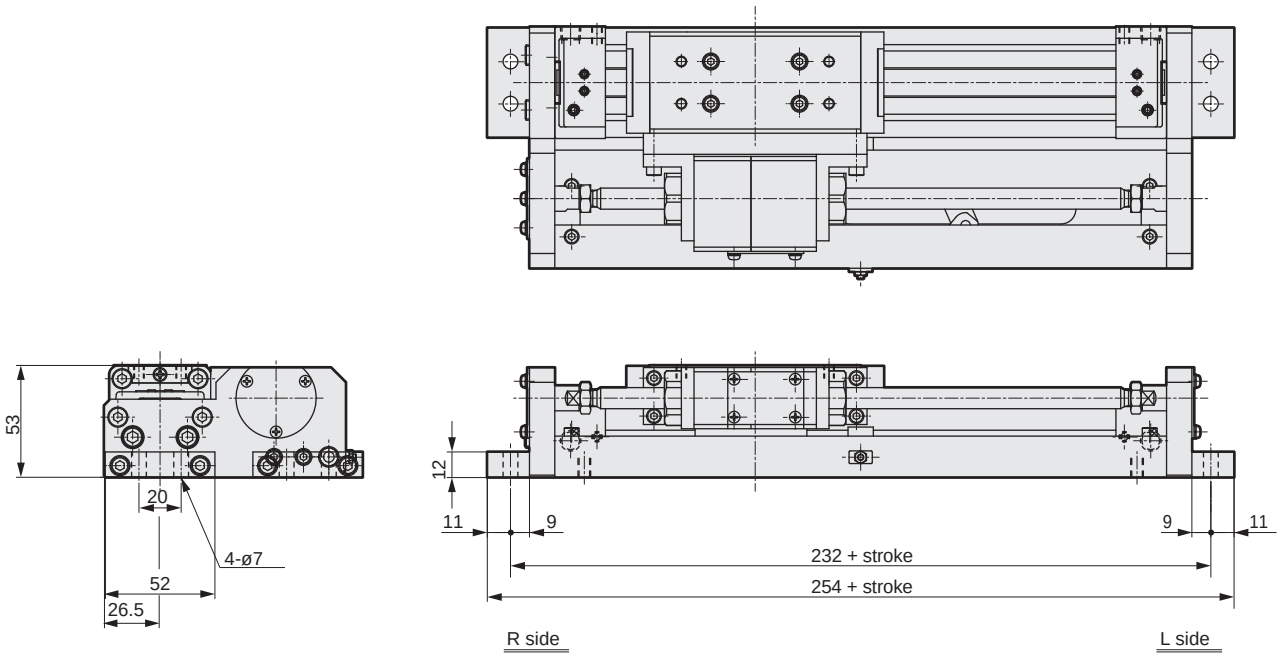

Dimensions (bore size: ø32 to ø63, mounting: LB)

● With foot bracket SRT3-LB-**-** *

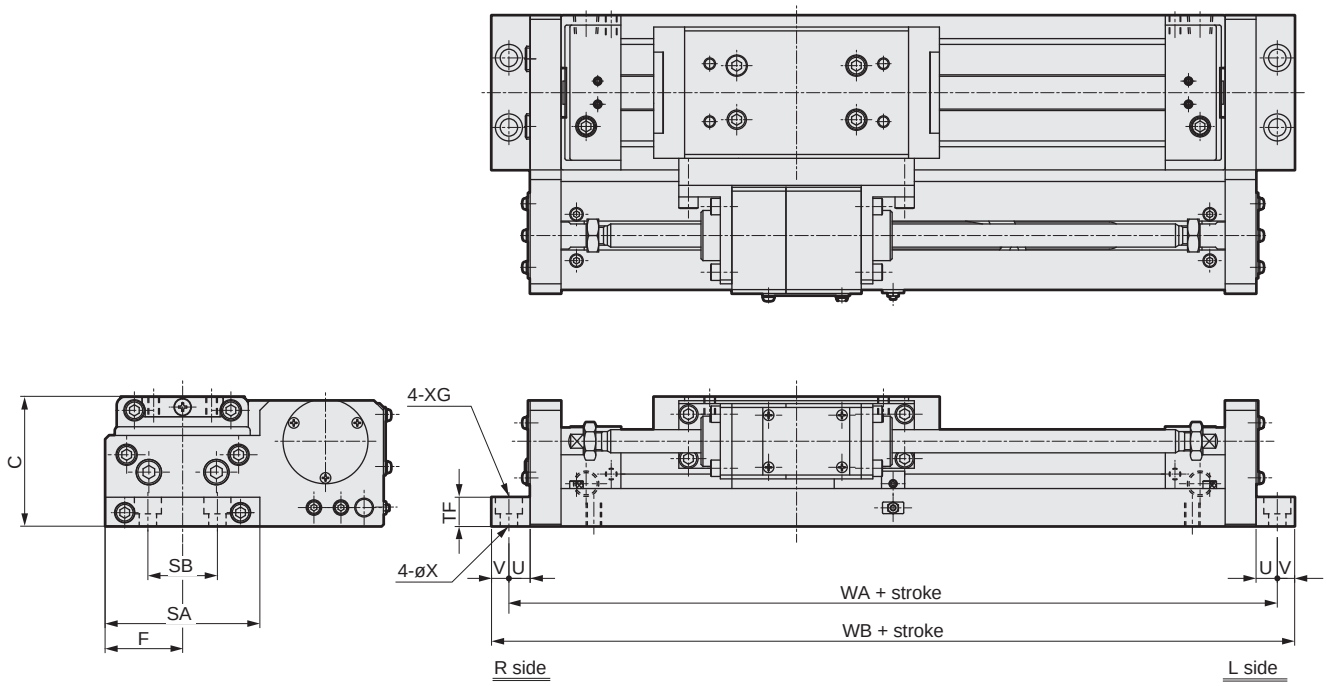

RD: Max. sensitivity installation position HD: Max. sensitivity installation position

Code / Bore size(mm)	C	F	Mounting method								
			SA	SB	TF	U	V	WA	WB	X	XG
ø32 or equiv.	57	33	64	32	12	9	11	272	294	7	-
ø40 or equiv.	67	40	80	36	15	11	9	298	316	9	14 spot face depth 8.6
ø50 or equiv.	82	48	94	45	20	11	9	316	334	9	14 spot face depth 8.6
ø63 or equiv.	95	59	116	50	25	13	12	362	386	11	17.5 spot face depth 10.8

SCP*3
CMK2
CMA2
SCM
SCG
SCA2
SCS2
CKV2
CAV2/COVP/N2
SSD2
SSG
SSD
CAT
MDC2
MVC
SMG
MSD/MSDG
FC*
STK
SRL3
SRG3
SRM3
SRT3
MRL2
MRG2
SM-25
ShkAbs
FJ
FK
Spd Contr
Ending

Dimensions: Option

● Floating fitting

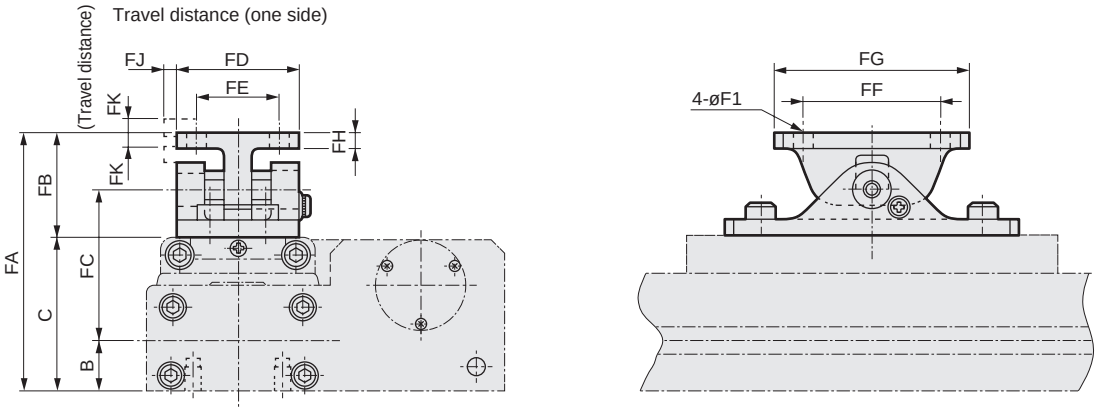

Code / Bore size (mm)	FA	FB	FC	FD	FE	FF	FG	FH	FI	FJ	FK	B	C
ø12 or equiv.	54	21	31.5	24	16	30	40	3	3.4	3	3	10.5	33
ø16 or equiv.	58	21	34	24	16	30	40	3	3.4	3	3	12	37
ø20 or equiv.	67	25	39	30	20	40	56	4	4.5	3	3	14	42
ø25 or equiv.	78	25	47	30	20	40	56	4	6	3	3	17	53
ø32 or equiv.	95	38	55.5	45	30	50	70	6	7	5	5	18.5	57
ø40 or equiv.	105	38	62	45	30	50	70	6	7	5	5	22	67
ø50 or equiv.	126	44	73	60	40	70	90	8	9	5	5	28	82
ø63 or equiv.	139	44	79	60	40	70	90	8	9	5	5	35	95

Rodless cylinder with brake (SRT3) selection guide

[STEP1]

Moment actuates according to the cylinder mounting direction and the position of center of gravity of load.

● Types of moment caused by load

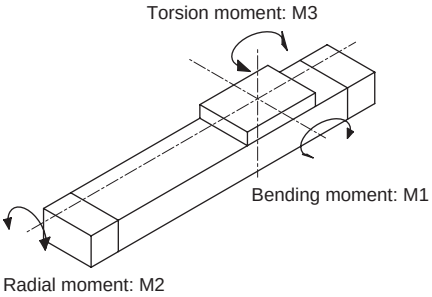

[Table 1] Value of a

Bore size	a(m)
ø12	0.023
ø16	0.025
ø20	0.028
ø25	0.036
ø32	0.039
ø40	0.045
ø50	0.054
ø63	0.060

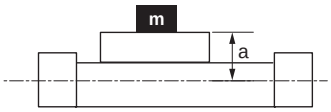

1 Obtain the static moment.

Unit: N·m

Mounting orientation		Horizontal upward	Horizontal downward	Horizontal lateral	Vertical
Vertical load W		mx9.8			-
Static moment	M1	W×ℓ_1	W×ℓ_1	-	W×(ℓ_3+a)
	M2	W×ℓ_2	W×ℓ_2	W×(ℓ_3+a)	-
	M3	-	-	W×ℓ_1	W×ℓ_2

m : Load weight [kg]
ℓ_1 : Length along the stroke direction from the center of table to the center of gravity of load [m]
ℓ_2 : Length in the width direction from the center of table to the center of gravity of load [m]
ℓ_3 : Length in the vertical direction from the center of table to the center of gravity of load [m]

Horizontal upward

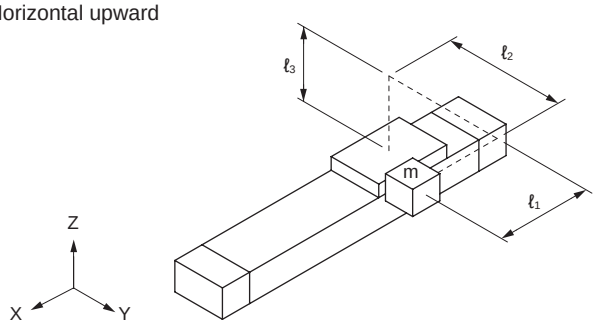

Horizontal downward

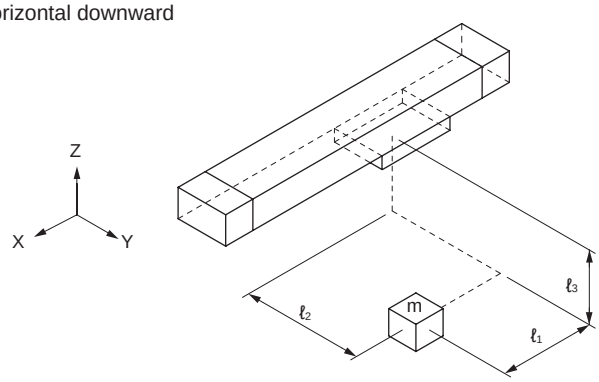

Horizontal lateral

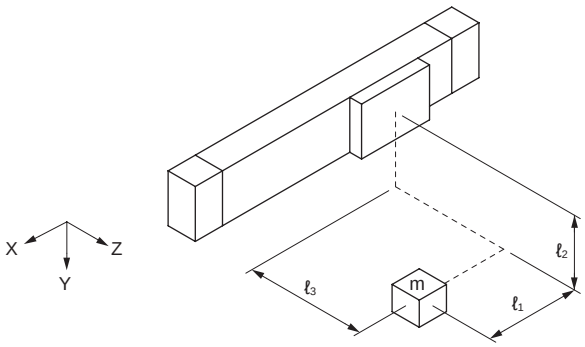

Vertical

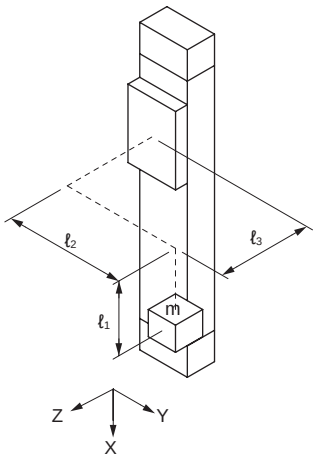

SCP*3
CMK2
CMA2
SCM
SCG
SCA2
SCS2
CKV2
CAV2/COVP/N2
SSD2
SSG
SSD
CAT
MDC2
MVC
SMG
MSD/MSDG
FC*
STK
SRL3
SRG3
SRM3
SRT3
MRL2
MRG2
SM-25
ShkAbs
FJ
FK
Spd Contr
Ending

2 Obtain the dynamic moment caused by the load inertia at the stroke end.

Unit: N·m

Mounting orientation		Horizontal upward / Horizontal downward	Vertical	Horizontal lateral
Dynamic moment	M1i	$W \times (\ell_3 + a) \times G$		
	M2i	M2i dynamic moment is not generated.		
	M3i	$W \times \ell_2 \times G$		

Dynamic moment can be calculated with the formulas above regardless of the mounting direction.

Obtain an approximate G coefficient from Table 2.

[Table 2]

$$Va\ (\text{Average speed}) = \frac{\text{Moving distance}}{\text{Movement time}}\ (\text{m/s})$$

Va (Average speed) (m/s)	Vm (stroke end speed) (m/s)	G Coefficient
0.3	to 0.65	9
0.6	to 1.00	15
0.9	to 1.30	23
1.2	to 2.00	40

G Coefficient = [ ]

3 Select an approximate bore size.

Select an approximate bore size.

$M1 + M1_i$ = [ ] (N·m)→(ø)

$M2$ = [ ] (N·m)→(ø)

$M3 + M3_i$ = [ ] (N·m)→(ø)

W = [ ] (N) →(ø)

$E' = \frac{1}{2} \times m \times Vm^2$ = [ ] (J) →(ø)

Select a temporary max. bore size.

ø [ ]

[Table 3] Allowable value

Item / Bore size (mm)	Wmax (N)	M1max (N·m)	M2max (N·m)	M3max (N·m)
ø12	30	1.5	0.6	0.6
ø16	140	5	1	1
ø20	200	10	1.5	3
ø25	360	17	5	10
ø32	620	36	10	21
ø40	970	77	23	26
ø50	1470	154	32	42
ø63	2320	275	52	76

[Table 4] Allowable absorbed energy value (E_0)

Bore size (mm)	Integrated air cushion (J)
ø12	0.03
ø16	0.22
ø20	0.59
ø25	1.40
ø32	2.57
ø40	4.27
ø50	9.13
ø63	17.4

Note) SRT3 with shock absorber attached is not available.
Install an external shock absorber if the kinetic energy of load: E' is larger than the allowable absorbed energy: E_0.

4 Obtain the resultant moment at the stroke end (M_T).
(Confirm that the bore size selected in **3** satisfies the formula below.)

$$M_T = \frac{M1+M1_i}{M1max} + \frac{M2}{M2max} + \frac{M3+M3i}{M3max} + \frac{W}{Wmax} < 1$$

M : Resultant moment (must be smaller than 1)
Wmax : Max. allowable value of W (from Table 3)
M1max : Max. allowable value of M1 (from Table 3)
M2max : Max. allowable value of M2 (from Table 3)
M3max : Max. allowable value of M3 (from Table 3)

- If M_T is much more than 1, change the selection condition.
- If M_T is slightly more than 1, improving the accuracy in STEP 2 may make the value 1 or less. Perform STEP 2 to see the result.

[STEP2]

Next, obtain a more accurate load factor, effective thrust, stroke end speed and resultant moment.

● Calculate the load factor.

$$\alpha = \frac{F_0}{F} \times 100\ [\%]$$

α : Load factor
F_0 : Force (N) required to move the workpiece
F : Effective thrust of the cylinder (N) (Fig. 1 to 3)

For horizontal operation	For vertical operation
$F_0=F_W+F_1+F_2+F_3+F_L$	$F_0=W+F_1+F_2+F_3+F_L$
F_W: Wx0.2(N)	F_1: M_1 x C1 Note(N)
F_2 : M2 x C2 Note (N)	F_3: M_3 x C3 Note(N)
F_L : Other kinds of resistance (e.g., guide resistance) (N)W : Load (N)	

Note: Coefficient to correct the increase of friction caused when moment is applied

[Table 5] Moment friction coefficients 1/m

Bore size (mm)	C1	C2	C3
ø12 or equiv.	8	27	8
ø16 or equiv.	7	24	7
ø20 or equiv.	6	21	6
ø25 or equiv.	5	16	5
ø32 or equiv.	4	13	4
ø40 or equiv.	4	11	4
ø50 or equiv.	4	9	4
ø63 or equiv.	3	8	3

[Table 6] Load factor guidelines

Working pressure (MPa)	Load factor (%)
0.2 to 0.3	α ≤ 40
0.3 to 0.6	α ≤ 50
0.6 to 0.7	α ≤ 60

● Graph for obtaining effective thrust

[Fig. 1]

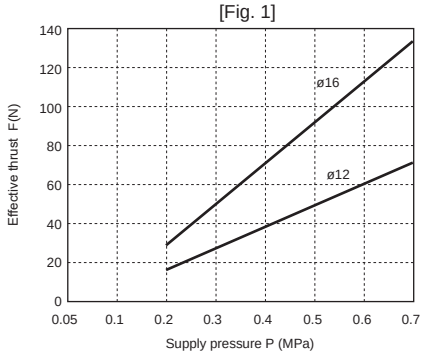

[Fig. 2]

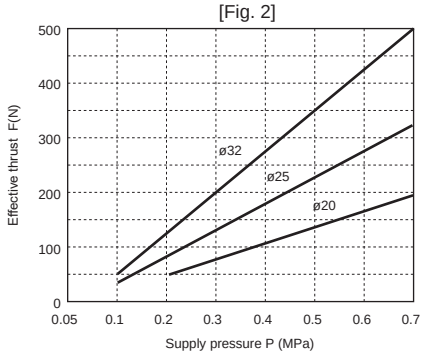

[Fig. 3]

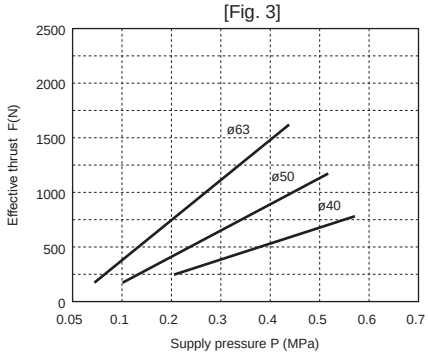

SCP*3
CMK2
CMA2
SCM
SCG
SCA2
SCS2
CKV2
CAV2/COVP/N2
SSD2
SSG
SSD
CAT
MDC2
MVC
SMG
MSD/MSDG
FC*
STK
SRL3
SRG3
SRM3
SRT3
MRL2
MRG2
SM-25
ShkAbs
FJ
FK
Spd Contr
Ending

[STEP3]

In [Fig. 3], obtain the stroke end speed (Vm) and G coefficient from the average speed (Va) and load factor obtained in STEP 2.

● Graph of speed and G coefficient [Fig. 3]

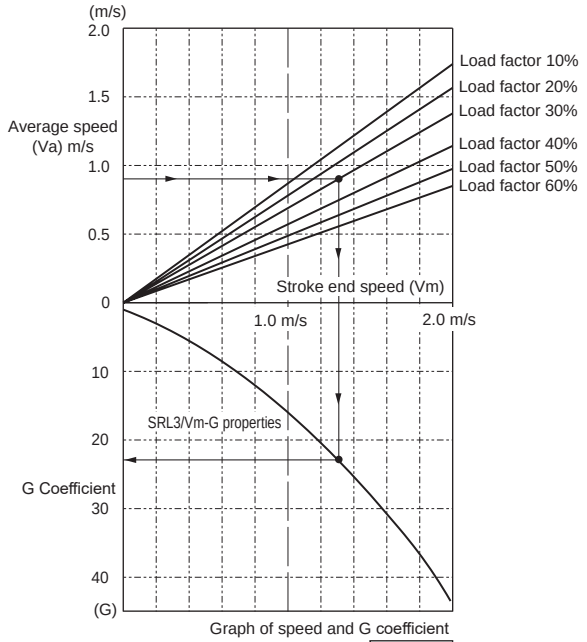

Graph of speed and G coefficient

G Coefficient = ☐

● The arrow (→) in the figure is the formula for obtaining

Stroke end speed :1.3 m/s
G Coefficient :22.5
at
Average speed :0.9 m/s
Load factor : 30%

[STEP4]

● Calculate the resultant moment (M_T) using the G coefficient obtained in STEP 3.

M1 + M1i	=	☐	(N·m)
M2	=	☐	(N·m)
M3 + M3i	=	☐	(N·m)
W	=	☐	(N)

$$M_T = \frac{M1 + M1_i}{M1max} + \frac{M2}{M2max} + \frac{M3 + M3i}{M3max} + \frac{W}{Wmax}$$

$M_T \leq 1$

↓

Bore size is decided. (* Refer to [Table 3] in STEP 1)

↓

Confirm cushion capacity

Unit: N·m

Mounting orientation	Horizontal upward	Horizontal downward	Vertical	Horizontal lateral
Dynamic moment	M1i	Wx(ℓ_3 + a)xG		
	M2i	M2i dynamic moment is not generated.		
	M3i	Wxℓ_2xG		

Although the formulas are the same as those in STEP 1, use the G coefficient obtained in STEP 3 for calculation.

[STEP5]

● Confirming cushion capacity

$$E = \frac{1}{2} \times m \times Vm^2$$

E : Kinetic energy at stroke end (J)
m : Load weight (kg)
Vm : Speed of the piston entering the cushion (m/s)

[Table 7] Allowable absorbed energy value (E_0)

Bore size (mm)	Integrated air cushion (J)
ø12	0.03
ø16	0.22
ø20	0.59
ø25	1.40
ø32	2.57
ø40	4.27
ø50	9.13
ø63	17.4

Note: SRT3 with shock absorber attached is not available.
Install an external shock absorber if the kinetic energy at stroke end: E is larger than the allowable absorbed energy: E_0.

[STEP6]

● The bore size determined from the cushion performance is øA. (Bore size determined in STEP 5)

● The bore size determined from the load conditions is øB. (Bore size determined in STEP 4)

øA ≥ øB → Select øA.
or
→ øB should be used with an external shock absorber.

øA < øB → Select øB.

Pneumatic components

Safety Precautions

Be sure to read this section before use.
Refer to Intro Page 73 for general information of the cylinder, and to Intro Page 80 for general information of the cylinder switch.

Product-specific cautions: Rodless cylinder with brake SRT3 Series

Design/selection

⚠ WARNING

■ Design a structure that prevents person(s) from coming into contact with the driven workpiece as well as the moving parts of the cylinder with brakes.
Provide a protective cover so that no one can directly touch the unit. In case of possible contact, provide safety measures such as a sensor for emergency stop before making contact and a buzzer to warn of danger.

■ Use a balanced circuit that accommodates the protrusion of the cylinder.
If pneumatic pressure is applied to only one side of the cylinder via operating the cylinder in any mid-stroke position (such as by braking), the piston pops out at high speed when the brake is released. This could cause physical harm, such as pinched hands or feet, or mechanical damage. Use a balance circuit, such as the recommended pneumatic pressure circuit, to prevent popping out.

■ As the rodless cylinder with brake requires no lubrication, never lubricate it. Otherwise, the brake may malfunction.

■ The holding force is the ability to hold static load that is not accompanied by vibration or shock, in a state where the brake is operating under no load.
Take care when constantly using near the upper limit of the holding force.

■ Do not apply loads with impact, strong vibration, or torque while brakes are activated.
If load is externally applied with impact, or if strong vibration or rotational force is externally applied, the holding force can be reduced, creating a dangerous situation.

■ Consider the stopping accuracy and overrun distance during the braking.
Because a mechanical lock is applied, the cylinder does not stop instantly when the stop signal is issued, but stops with a time-wise delay. The stroke at which the cylinder slides due to this delay is the overrun distance. The max. and min. width of the overrun distance is the stopping accuracy.
- To achieve the required stop position, move the limit switch forward by the overrun distance.
- The limit switch must have a detection length (dog length) of the overrun distance + α.
- The operating range of CKD cylinder switches is 7 to 16 mm, depending on the switch model. If overrun distance exceeds this, provide self-holding of the contact at the switch load.

■ Do not use multiple synchronized cylinders with brakes.
If the synchronization deviates, an excess moment load or load concentration is applied to the cylinder where the brake was applied first, risking brake release defects, shortened service life, or damage.

■ In order to improve stopping accuracy, ensure that the brake stops the cylinder as soon as possible after receiving the stop signal.
Use a high response DC control electricity circuit or valve, and set the valve as close to the cylinder as possible.

■ The stopping accuracy is susceptible to fluctuations in piston speed.
If the piston speed changes due to load fluctuations or by some disturbance while the cylinder is moving, the stopping position may vary sharply. Make sure that the piston speed stays the same up to just before the stop position. As well, since the speed changes significantly in the cushioned range and in the acceleration range after starting operation, the variability of the stopping position will increase.
The stopping accuracy at piston speed of 300 mm/s with no load is ±1.5 mm (reference value).

■ Notes for basic circuits
- Horizontal load

Pipe as shown in Figure 1. A rodless cylinder does not require a pressure balancing regulator since it has the same sectional area on both sides of the piston.

Fig. 1

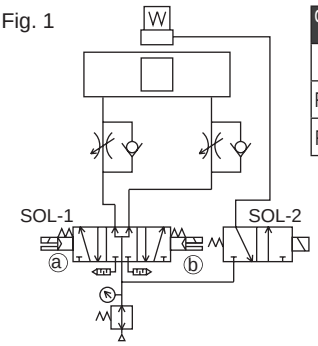

Operational status	ⓐSOL-1ⓑ		SOL-2
Stop	OFF	OFF	OFF
Reverse	ON	OFF	ON
Forward	OFF	ON	ON

- Vertical load

If the load is facing downward as shown in Figure 2, the table moves incorrectly in the load direction when brakes are released. Install a regulator with a check valve on the upper side to reduce thrust in the load direction and balance the load.

Fig. 2

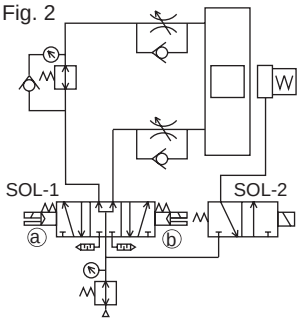

Operational status	ⓐ SOL-1ⓑ		SOL-2
Stop	OFF	OFF	OFF
Drop	ON	OFF	ON
Rise	OFF	ON	ON

(*1) When pressure fluctuates due to any other pneumatic component, install a special regulator to stabilize the operation.

■ Release brakes before cylinder operation. The brake may not be released when the cylinder is operating at high speeds.

■ If back pressure is applied to the locking mechanism, the lock may be released. Use the brake release valve as a single unit, or use an individual exhaust manifold.

■ Use a 3-position P/A/B connection (pressurization on both sides) valve for the cylinder drive to prevent the piston from popping out when starting.

■ To maintain balance of the thrust, including the load, the side with the larger thrust should have a regulator with a check valve.

⚠ CAUTION

■ Avoid environments where the cylinder is exposed to welding spatters.

■ Do not use the cylinder in places where it is directly exposed to coolant, oil mist, etc.
Be sure to provide a protective cover, etc., if the cylinder must be installed in such a place.

■ Do not use this product where foreign matter such as cutting chips, dust, or spatter, etc., will contact or enter the cylinders.
Provide a protective cover, etc., if the cylinder must be installed in such a place.
Be sure to consult with CKD for use in these environments.

■ Although the structure of SRL3 and other slit rodless cylinders has a slight amount of external air leakage, it does not affect the speed control performance.

■ Prevent negative pressure from occurring inside the cylinder tube. Using the cylinder as an air balancer or operating the table with external force or inertia force with all ports closed may cause negative pressure inside the cylinder, resulting in air leakage if the seal belt comes off. Do not use external force or inertia force, otherwise negative pressure will occur inside the cylinder.

■ Notes for stopping accuracy

● Stopping pitch and load factor
Stopping accuracy differs with stopping pitch and load factor. The load factor below is recommended for achieving specified stopping accuracy.

Stop pitch	Load factor
50 mm or less	20% of thrust
50 mm to 100 mm	40% of thrust
100 mm or more	60% of thrust

● Selection of valve kit for brake
The stopping accuracy and overrun distance will change according to the responsiveness of the brake valve. Connect the valve directly to the brake port to improve stopping accuracy.

● When using PC (programmable controller)
If a PC (programmable controller) is used as the electric control unit for the valve for brake, stopping accuracy drops due to scan time (computing time). When using a PC, do not assemble the valve for brake into the PC circuit.

■ Do not make major changes in applied load when stopped with brakes, or the stopping position may change.

■ Wear powder may be generated when the cableveyor slides against the protective tape. Be especially careful in environments that should be free from dust.

Mounting, installation and adjustment

⚠ WARNING

■ If the brake is released while air is applied to only one side of the cylinder, the piston can pop out at high speed, creating a dangerous situation. When releasing the brake during adjustment or other maintenance, always observe the following:

- Check that no one is in the movable range of the load and that no problems will arise if the load moves when brakes are released.
- When releasing the brake, perform position locking or take other measures
  ·Place the load to the bottom end
  ·Pressurize both sides
  ·Place a strut
  to prevent the load from falling.
- Confirm that air is not pressured on only one side of the cylinder when releasing brakes.

■ How to manually release the brake

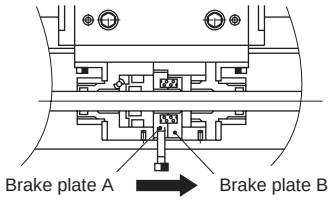

- Remove the cover, screw the hexagon socket head cap screw into the brake plate A and turn it in the direction of the arrow. The brake plates A and B become horizontal and the piston rod is released.
  Note that the two brake plates should be turned completely. Otherwise the piston rod is released in one direction only.

Bore size	Thread size of brake plate A
ø12,ø16 ø20,ø25	M3
ø32,ø40 ø50,ø63	M4

- If no air pressure is supplied in vertical mounting, etc., brake force may not be sufficient when the lock is manually released. This may cause the table to move (drop) with the load's weight.
  For safety, take the following measures before manually releasing the lock:
  · Move the load to the bottom end
  · Provide a stopper to the load
  · Apply air pressure to the rodless cylinder to balance the load
- Remove the manual release bolt during normal use.

■ Brakes are released manually or by pressurizing the brake release port. When mounting the load, the brake release operation may cause the load to fall; make sure that the brake works in a state where the manual release operation is in its initial state or where there is no air in the brake release port.

■ Do not apply to the cylinder any force that exceeds the brake holding force listed in the catalog.

■ If there is any play, such as looseness, in the brake signal dog, stopping accuracy is affected. Securely fix to eliminate play, etc.

■ If the cylinder speed is fast, the detection dog must be long enough to match relay response time. If the dog is short, the stop signal is not output and operation does not stop.

⚠ CAUTION

■ Do not apply strong impact or excessive moment to the table.

■ Carefully match the centers when connecting a load with an external guide mechanism.

- Displacement of the shaft center increases as the stroke becomes longer. Consider the connection method (floating) so that the displacement can be absorbed.

■ Adjust the air balance in the cylinder.
With brakes released, place a load on the cylinder and balance the load by adjusting pneumatic pressure applied to the cylinder rod side and head side. Malfunctions such as cylinder popping out during brake release or abnormal brake release can be prevented by accurately balancing the load.

■ Adjust the installation position of the detector parts, including the cylinder switch.
When braking, consider the overrun distance with respect to the desired stop position and adjust the installation positions for detector parts, including the cylinder switch.

■ Load fluctuations during the reciprocating stroke of the cylinder can cause inconsistent piston speed, leading to greater variation in the stop position. Adjust the mounting of the load so as to prevent any load fluctuations during the reciprocating stroke of the cylinder, especially before the stop position.

■ Since the speed changes significantly in the cushioned range and in the acceleration range after starting operation, the variability of the stopping position will increase. For this reason, the accuracy described in the specifications may not be obtained when the stroke to the next point just after the start of operation is short.

■ Wear powder may be generated when the cableveyor slides against the protective tape. Be especially careful in environments that should be free from dust.

■ Keep the moment, including inertia force caused by load transfer or stop, within the allowable load. If this value is exceeded, it will lead to damage.

- When the overhang load is large and the cylinder is stopped at both ends by the piston, load inertia causes bending moment even if the energy is within the allowable absorbed energy of the internal cushion.
  If the kinetic energy is large and an external cushion is used, adjust so that the cylinder contacts with the center of gravity of the workpiece or the closest point to it.
- When using an external stopper, make a selection considering bending moment due to the cylinder thrust.
- Moment that operates when the cylinder stops with an external stopper

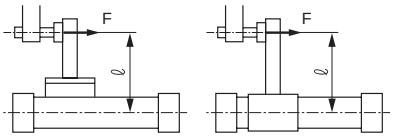

M1 = F· ℓ

M3 = F· ℓ
F : Cylinder thrust
ℓ : Length from the center of the cylinder to the stopper

- If the centers are not coincident when an external guide is attached, movement will not be smooth and resistance due to interference will operate as moment. Design the connection part so that it can accept non-coincidence of the centers.

- Example of guide use

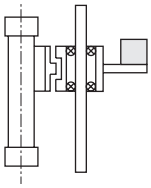

■ Do not perform electric welding after installing the rodless cylinder. Otherwise electric current passes into the cylinder and causes sparks between the dust-proof belt and cylinder tube, which will damage the dust-proof belt.

■ The cylinder body may be damaged or may malfunction if a unit with excessive inertia, etc., is moved. Use within the allowable range.

■ Prevent scratches or dents on the cylinder body. Otherwise, malfunctions may result.

■ If external or inertia forces cause negative pressure inside the cylinder, the seal belt may come off and air may leak or malfunctions may occur.

■ CKD's shock absorber is a consumable part. Replace when the energy absorption performance has degraded or the operation is not smooth.

Use/maintenance

⚠ WARNING

■ For safety purposes, prevent the load from falling under its own weight during maintenance.

■ Do not disassemble the brake section for inspection, or a hazardous situation may occur during use thereafter.

■ The required grease is already applied to the brakes and so do not wipe it off. Do not apply extra grease.

■ The brake section cannot be replaced.

■ Always use the product with the dust cover on, except for when performing manual release, in order to prevent failure or malfunction.

⚠ CAUTION

■ Air supply pipes that are too narrow or too long can reduce stopping accuracy.

■ Frictional resistance increases and causes the piston speed to change when the cylinder has been stopped for a long time, such as when using first thing in the morning or afternoon. This may impair stopping accuracy. Conduct conditioning operations to obtain a stable stopping accuracy.

MRL2

Magnet rodless cylinder

ø6/ø10/ø16/ø20/ø25/ø32

CONTENTS

Product introduction	1732
Points regarding selection guide	1734
Series variation	1736
Variation and option combination selection table	1738
● Basic (MRL2)	1740
● Simplified guide 1-piston (MRL2-G)	1740
● Simplified guide 2-piston (MRL2-W)	1740
Selection guide	1755
Technical data	1759
⚠ Safety precautions	1760

The cylinder switches T2YH, T2YV, T3YH, and T3YV are scheduled for end of production at the end of December 2023.

Twice the durability

Magnet rodless cylinder MRL2 Series

The newly adopted lubrication mechanism has significantly improved the service life and operational stability of the new magnet rodless cylinder.
ø25 and ø32 are also available.

Dramatically improved performance with the lube keeping structure!

A fiber assemblage (lube keeping structure) soaked with grease is mounted on the sliding portions of the piston and slider. This enables stable lubrication to prevent wear long term. A significant improvement of service life (more than 2-fold compared to the previous models) and stabilization of operation have been realized.

● Lube keeping structure sectional area (180x)

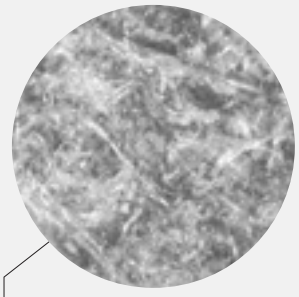

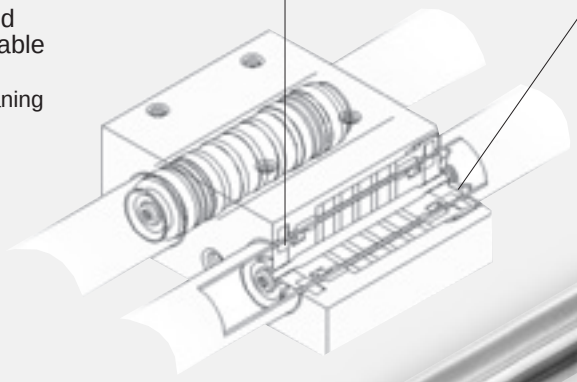

Features of lube keeping structure

Lubrication supplying/absorbing function

Due to the effects of the capillary phenomenon, the soaked grease can be evenly applied to the sliding surface in a stable manner while absorbing any excess grease.
Note) Use the scraper to wash the tube surface directly with cleaning liquid.

Dust wiper function

As well as dust, the powder from packing wear, etc., is captured within the fiber assemblage to reduce dirt from accumulating on the sliding portions.
(The conventional powerful scraper is also available.)

Environmentally friendly

Set with optional rubber-air cushion. Suppresses impact sound at the stroke end, and thus contributes to a better factory environment.

Thin slider

Flat design with a thin slider

Direct mount

(Top or bottom)

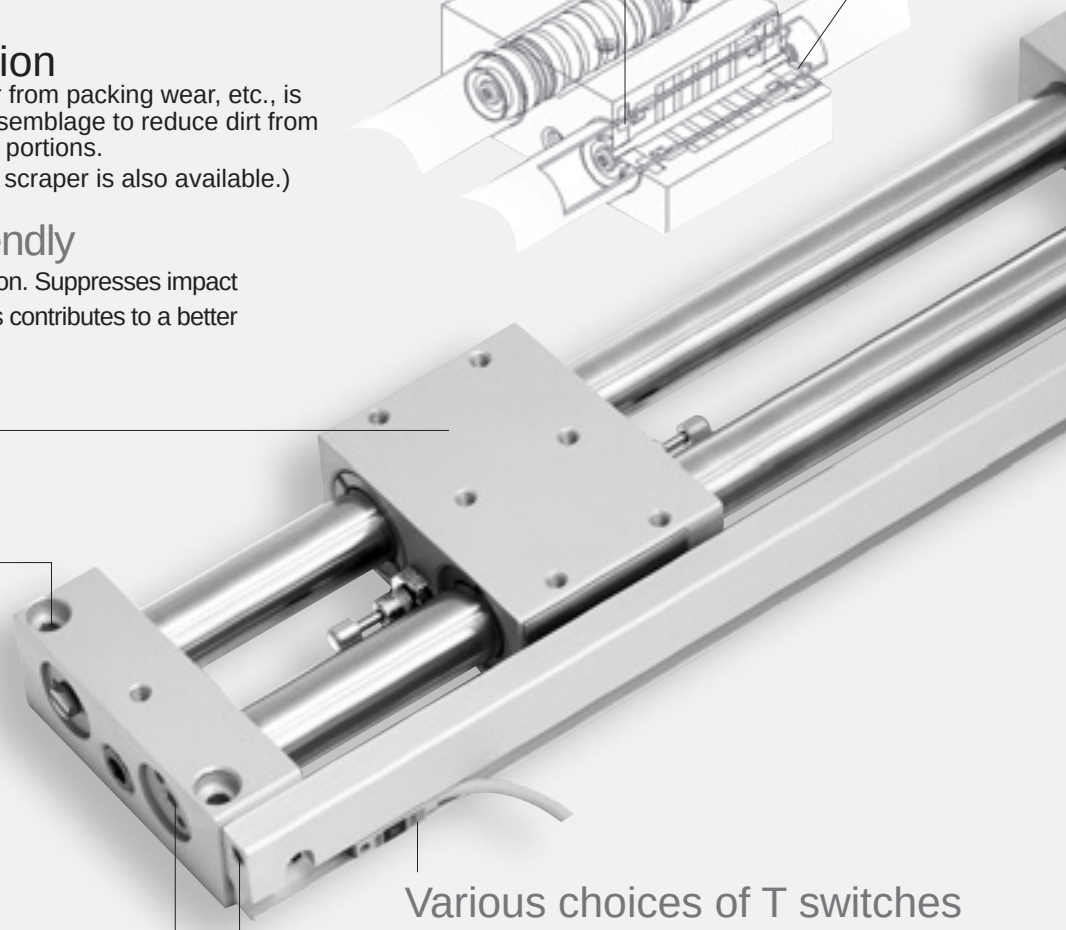

Various choices of T switches

Single-surface common piping is available (option)

Simplified guide (2-piston)

MRL2-W Series

● Rubber-air cushion mechanism

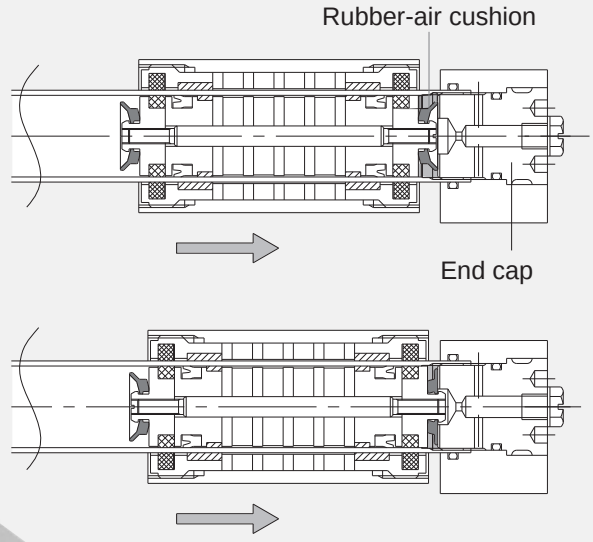

An airtight space is created in the ▭ area when the piston operates and the rubber-air cushion and end cap make contact. Air in the airtight area is further compressed, absorbing energy as the piston operates. At the end of the stroke, energy generated by compression distortion of the air cushion is also added.

ø25 and ø32 bore sizes are now available.

Basic
MRL2Series

Basic model of space saving
ø6/ø10/ø16/ø20/
ø25/ø32

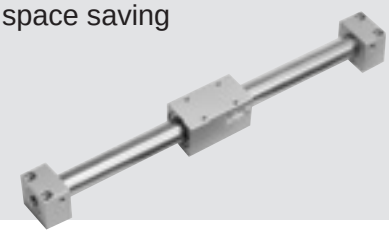

Simplified guide
(1-piston)
MRL2-GSeries

Simplified guide with a cylinder and a guide
ø6/ø10/ø16/ø20/
ø25/ø32

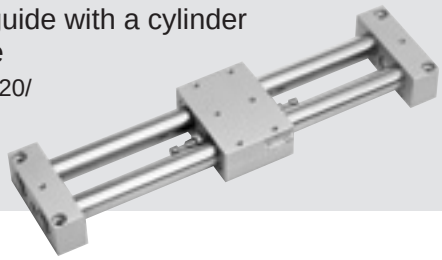

Simplified guide
(2-piston)
MRL2-WSeries

Simplified guide with two cylinders provide twice as much high thrust
ø6/ø10/ø16/ø20/
ø25/ø32

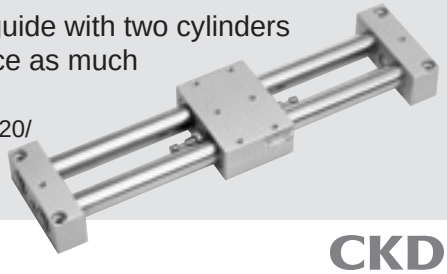

MRL2/MRL2-G/MRL2-W Series

● Points regarding selection guide

	Points regarding selection guide	Recommended model No.	
Basic	· When combining use of a guide system apart from the cylinder. · When there are space limitations. * Use together with a guide.	**MRL2** ø6, ø10, ø16, ø20, ø25, ø32 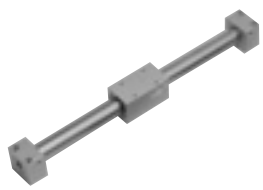	
Simplified guide	· When securing the course of the slider. · When using for general transportation. · When the stacked load is large. · When stroke adjustment is required. · When absorbing the impact at the end of the stroke with a shock absorber.	**MRL2-G** (Simplified guide 1-piston) ø6, ø10, ø16, ø20, ø25, ø32 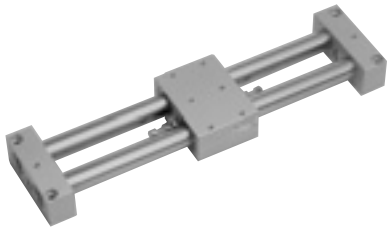	
	· When securing the course of the slider. · When using for general transportation. · When the stacked load is large and a double thrust is required. · When stroke adjustment is required. · When absorbing the impact at the end of the stroke with a shock absorber.	**MRL2-W** (Simplified guide 2-piston) ø6, ø10, ø16, ø20, ø25, ø32 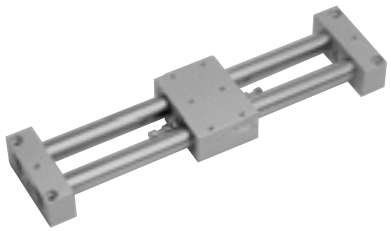	

	Page
Series variation	1736
⚠ Safety precautions	1760
Technical data	
MRL2-G / MRL2-W slider runout amount Rubber-air cushion data	1759

	Features		Page
	· Lube keeping structure is used to realize a long service life. · By selecting the rubber-air cushion, it is possible to reduce collision noise level and collision acceleration at the end of the stroke. · Cylinder direct mounting is possible.	Specifications	1740
		How to order	1742
		Internal structure and parts list	1744
		Dimensions	1746
		Switch mounting position dimensions	1754
		Selection guide	1755
	· With the twin tube of the MRL2 series, it is no longer necessary to separately install a guide system. · Space saving with a thin design and a low slide table height. · The impact at the end of the stroke will be absorbed with the type equipped with a shock absorber. · Single surface piping is possible with the common piping with switch.	Specifications	1740
		How to order	1742
		Internal structure and parts list	1748
		Dimensions	1752
		Switch mounting position dimensions	1754
		Selection guide	1755
	· With the MRL2 Series twin tube, it is no longer necessary to separately install a guide system. · With the twin piston, the generated thrust is twice that of a single piston model. · Space saving with a thin design and a low slide table height. · The impact at the end of the stroke will be absorbed with the type equipped with a shock absorber. · Single surface piping is possible with the common piping with switch.	Specifications	1740
		How to order	1742
		Internal structure and parts list	1750
		Dimensions	1752
		Switch mounting position dimensions	1754
		Selection guide	1755

Magnet rodless cylinder MRL2 Series

Series	Variation	Model No.	Bore size (mm)	Cushion: Rubber cushion	Cushion: Rubber-air cushion	Standard stroke (mm): 50	Standard stroke (mm): 100	
Basic MRL2 series	Fine speed with switch	MRL2 MRL2-L MRL2-F	ø6	●	◎	●	●	
			ø10			●	●	
			ø16				●	
			ø20					
			ø25					
			ø32					
Simplified guide 1-piston MRL2-G Series	Fine speed with switch	MRL2-G MRL2-GL MRL2-GF	ø6	●	◎	●	●	
			ø10			●	●	
			ø16				●	
			ø20					
			ø25					
			ø32					
Simplified guide 2-piston MRL2-W Series	Fine speed with switch	MRL2-W MRL2-WL MRL2-WF	ø6	●	◎	●	●	
			ø10			●	●	
			ø16				●	
			ø20					
			ø25					
			ø32					

●: Standard, ◎:Option, ▒: Not available

Standard stroke (mm)									Min. stroke (mm)	Max. stroke *1 (mm)	Custom stroke (per mm)	Option				Page
												With scraper	Common piping with switch	With shock absorber	Copper and PTFE free specifications *2	
150	200	250	300	350	400	500	600	700				S	R	C	(P6)	
●	●								1	300	1	◎			●	1740
●	●	●	●							500		◎			●	
●	●	●	●		●	●				1000		◎			●	
	●	●	●	●	●	●	●	●		1500		◎			●	
	●	●	●	●	●	●	●	●		1500		◎			●	
	●	●	●	●	●	●	●	●		1500		◎			●	
●	●								1	300	1	◎		◎	●	1740
●	●	●	●							500		◎	◎	◎	●	
●	●	●	●		●	●				1000		◎	◎	◎	●	
	●	●	●	●	●	●	●	●		1500		◎	◎	◎	●	
	●	●	●	●	●	●	●	●		1500		◎	◎	◎	●	
	●	●	●	●	●	●	●	●		1500		◎	◎	◎	●	
●	●								1	300	1	◎		◎	●	1740
●	●	●	●							500		◎	◎	◎	●	
●	●	●	●		●	●				1000		◎	◎	◎	●	
	●	●	●	●	●	●	●	●		1500		◎	◎	◎	●	
	●	●	●	●	●	●	●	●		1500		◎	◎	◎	●	
	●	●	●	●	●	●	●	●		1500		◎	◎	◎	●	

*1 : · The max. strokes of models equipped with a switch are ø6: 200 mm, ø10: 300 mm, ø16: 500 mm, ø20 to ø32: 700 mm
· The max. strokes of fine speed models are ø6: 300 mm, ø10: 500 mm, ø16 to ø25: 800 mm, ø32: 700 mm
· The max. stroke of common piping models equipped with a switch are ø10: 300 mm, ø16: 500 mm, ø20 to ø32: 700 mm

*2 : · Although copper and PTFE free specifications are available with the standard models, these specifications are not available for types with shock absorber and fine speed.

SCP*3
CMK2
CMA2
SCM
SCG
SCA2
SCS2
CKV2
CAV2/COVP/N2
SSD2
SSG
SSD
CAT
MDC2
MVC
SMG
MSD/MSDG
FC*
STK
SRL3
SRG3
SRM3
SRT3
MRL2
MRG2
SM-25
ShkAbs
FJ
FK
Spd Contr
Ending

Variation and option combination selection table

●: Standard
◎: Option
○: Available (made-to-order product)
△: Available depending on conditions (Contact CKD.)
×: Not available

Category		Category	Variation					Port thread			Cushion		Option				
			Double acting basic	Twin 1-piston	Twin 2-piston	With cylinder switch	Fine speed	NPT (ø25/ø32)	G (ø25/ø32)		Rubber-air cushioned		With shock absorber	With scraper	Common piping with switch	Clean-room specifications (low dust generation)	
		Code	None	G	W	L	F	N	G		C		C	S	R	P72	
Variation	Double acting basic	Blank						○	○		◎		×	◎	×	◎	
Variation	Twin 1 piston	G			×	◎	◎	○	○		◎		◎	◎	◎	◎	
Variation	Twin 2 piston	W				◎	◎	○	○		◎		◎	◎	◎	◎	
Variation	With cylinder switch	L					◎	○	○		◎		◎	◎	*3	◎	
Variation	Fine speed	F						○	○		◎		*1	×	×	×	
Port thread	NPT(ø25/ø32)	N							×		○		○	○	○	○	
Port thread	G (ø25/ø32)	G									○		○	○	○	○	
Cushion	Rubber-air cushioned	C											◎	◎	◎	◎	
Option	With shock absorber	C												◎	◎	×	
Option	With scraper	S													◎	*4	
Option	Common piping with switch	R														◎	
Option	Clean-room specifications (low dust generation)	P72															
Accessory	Cylinder switch	Listed separately	◎	◎	◎	◎	◎	○	○		◎		◎	◎	◎	◎	

Caution
*1: Fine speed performance upon entry into the shock absorber cannot be guaranteed.
*2: For P72 clean room specifications, refer to “Components for Clean Room Specifications” (catalog No. CB-033SA).
*3: When selecting a common piping with an “R” switch, be sure to combine the unit with “L” with switch.
*4: As the clean-room specifications P72 are all equipped with a scraper, the code “S” is not required.

[Example of model No.]

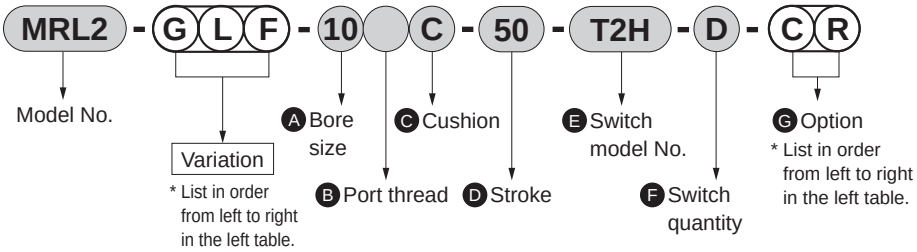

Model No.: Magnet rodless cylinder
● Variations: Simplified guide 1 piston, with switch, fine speed

A Bore size	: ø10 mm
B Port thread	: Rc thread
C Cushion	: Rubber-air cushion
D Stroke	: 50 mm
E Switch model No.	: Proximity T2H switch, lead wire 1 m
F Switch quantity	: 2
G Option	: With shock absorber, common piping

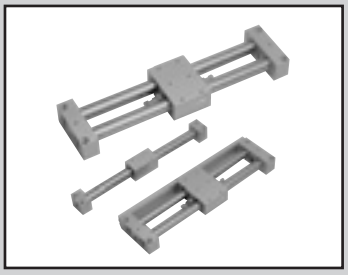

Magnet rodless cylinder

· Basic **MRL2-(F)** Series
· Simplified guide 1-piston **MRL2-G(F)** Series
· Simplified guide 2-piston **MRL2-W(F)** Series

● Bore size: ø6, ø10, ø16, ø20, ø25, ø32

JIS symbol

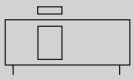

RoHS CAD

Specifications

Item		MRL2(L,F) , MRL2-G(L,F) , MRL2-W(L,F)					
Bore size	mm	ø6	ø10	ø16	ø20	ø25	ø32
Actuation		Double acting					
Working fluid		Compressed air					
Max. working pressure	MPa	0.7 (≈100 psi, 7 bar)					
Min. working pressure	MPa	0.3 (≈44 psi, 3 bar) (*1)		0.2 (≈29 psi, 2 bar)			
Proof pressure	MPa	1.05 (≈150 psi, 10.5 bar)					
Ambient temperature	°C	-10 (14°F) to 60 (140°F) (fine speed: 5 (41°F) to 60 (140°F)) (no freezing)					
Port size		M5				Rc1/8	
Stroke tolerance	mm	$^{+1.5}_{0}$ (to 1000)			$^{+2.0}_{0}$ (to 1500)		
Working piston speed	mm/s	50 to 500 (fine speed: 1 to 200)					
Cushion		Rubber cushion					
Lubrication		Not required (use turbine oil ISO VG32 if necessary for lubrication); However, not available with fine speed					
Magnet holding force (*2)	N	19	63	166	294	350	574
Adjustable stroke range (single side) (*3)	mm	3	4	6	8.5	10	10

*1: The value for MRL2-G-6-C (with shock absorber) is 0.4.
*2: The simplified guide 2-piston (W) will be a 2-fold value.
*3: The stroke of MRL2 (basic) cannot be adjusted.

Stroke

Bore size (mm)	Standard stroke (mm)	Max. stroke (mm)	Max. stroke with switch (mm)	Max. stroke (mm) of common piping with switch	Max. stroke of fine speed (mm)	Min. stroke (mm)
ø6	50, 100, 150, 200	300	200	-	300	1
ø10	50, 100, 150, 200, 250, 300	500	300	300	500	
ø16	100, 150, 200, 250, 300, 400, 500	1000	500	500	800	
ø20	200, 250, 300, 350, 400, 500, 600, 700	1500	700	700	800	
ø25	200, 250, 300, 350, 400, 500, 600, 700	1500	700	700	800	
ø32	200, 250, 300, 350, 400, 500, 600, 700	1500	700	700	700	

■ The custom stroke is available in 1 mm increments.

Number of installed T-switches and min. stroke (mm)

Switch quantity	1				2				3				4			
Switch model No. / Bore size (mm)	T*V	T*H	T*YV	T*YH	T*V	T*H	T*YV	T*YH	T*V	T*H	T*YV	T*YH	T*V	T*H	T*YV	T*YH
ø6 or equiv.	5	5	5	5	20	50	40	70	40	85	71	115	60	120	101	160
ø10 or equiv.	5	5	5	5	20	50	40	70	40	85	71	115	60	120	101	160
ø16 or equiv.	5	5	5	5	20	50	40	70	40	85	71	115	60	120	101	160
ø20 or equiv.	5	5	5	5	20	50	40	70	40	85	71	115	60	120	101	160
ø25 or equiv.	5	5	5	5	20	50	40	70	40	85	71	115	60	120	101	160
ø32 or equiv.	5	5	5	5	20	50	40	70	40	85	71	115	60	120	101	160

*T1H has the same min. stroke as T*YH and T1V the same as T*YV.

Switch specifications

● 1-color/2-color LED

Item	2-wire proximity				3-wire proximity			
	T1H/T1V	T2H/T2V	T2YH/T2YV	T2WH/T2WV	T3H/T3V	T3PH/T3PV	T3YH/T3YV	T3WH/T3WV
Applications	For programmable controller, relay, compact solenoid valve	Dedicated for programmable controller			For programmable controller, relay			
Output method	-				NPN output	PNP output	NPN output	NPN output
Power supply voltage	-				10 to 28 VDC			
Load voltage	85 to 265 VAC	10 to 30 VDC		24 VDC ±10%	30 VDC or less			
Load current	5 to 100 mA	5 to 20 mA (*3)			100 mA or less		50 mA or less	
Indicator	LED (Lit when ON)	LED (Lit when ON)	Red/green LED (Lit when ON)	Red/green LED (Lit when ON)	LED (Lit when ON)	Yellow LED (Lit when ON)	Red/green LED (Lit when ON)	Red/green LED (Lit when ON)
Leakage current	1 mA or less with 100 VAC, 2 mA or less with 200 VAC	1 mA or less			10 μA or less			
Weight g	1 m:33 3 m:87 5 m:142	1 m:18 3 m:49 5 m:80	1 m:33 3 m:87 5 m:142	1 m:18 3 m:49 5 m:80	1 m:18 3 m:49 5 m:80		1 m:33 3 m:87 5 m:142	1 m:18 3 m:49 5 m:80

*1: Refer to Ending Page 1 for detailed switch specifications and dimensions.
*2: Switches other than the above models, such as switches with connectors, are also available. Refer to Ending Page 1.
*3: The max. load current is 20 mA at 25°C. The current is lower than 20 mA if the operating ambient temperature around the switch is higher than 25°C. (5 to 10 mA at 60°C)

Cylinder weight

Unit (g)

Model No.	No switch		With switch		Common piping with switch	
	Weight for 0 mm stroke	Additional weight per S = 100mm	Weight for 0 mm stroke	Additional weight per S = 100mm	Weight for 0 mm stroke	Additional weight per S = 100mm
MRL2-6	73	13	103	39	-	-
MRL2-10	143	28	169	48	-	-
MRL2-16	278	43	313	63	-	-
MRL2-20	542	85	587	105	-	-
MRL2-25	954	98	1017	128	-	-
MRL2-32	1230	195	1301	225	-	-
MRL2-G-6	193	28	223	54	-	-
MRL2-G-10	368	53	394	73	411	94
MRL2-G-16	635	85	670	105	691	126
MRL2-G-20	1197	155	1242	175	1269	196
MRL2-G-25	1852	196	1915	226	1997	289
MRL2-G-32	2297	390	2368	420	2455	483
MRL2-W-6	203	28	233	54	-	-
MRL2-W-10	398	53	424	73	441	94
MRL2-W-16	710	85	745	105	766	126
MRL2-W-20	1367	155	1412	175	1439	196
MRL2-W-25	2206	196	2269	226	2351	289
MRL2-W-32	2859	390	2930	420	3017	483

*1: The weight of the switch is not included in the product weight of types with switch and common piping with switch.

Theoretical thrust table

● MRL2,MRL2-G

(Unit: N)

Bore size (mm)	Operating direction	Working pressure MPa					
		0.2	0.3	0.4	0.5	0.6	0.7
ø6	Push/Pull	-	8.48	11.3	14.1	17.0	19.8
ø10	Push/Pull	-	23.6	31.4	39.3	47.1	55.0
ø16	Push/Pull	40.2	60.3	80.4	$1.01x10^2$	$1.21x10^2$	$1.41x10^2$
ø20	Push/Pull	62.8	94.2	$1.26x10^2$	$1.57x10^2$	$1.88x10^2$	$2.20x10^2$
ø25	Push/Pull	98.2	$1.47x10^2$	$1.96x10^2$	$2.45x10^2$	$2.95x10^2$	$3.44x10^2$
ø32	Push/Pull	$1.61x10^2$	$2.41x10^2$	$3.22x10^2$	$4.02x10^2$	$4.83x10^2$	$5.63x10^2$

● MRL2-W

(Unit: N)

Bore size (mm)	Operating direction	Working pressure MPa					
		0.2	0.3	0.4	0.5	0.6	0.7
ø6	Push/Pull	-	17.0	22.6	28.3	33.9	39.6
ø10	Push/Pull	-	47.1	62.8	78.5	94.2	$1.10x10^2$
ø16	Push/Pull	80.4	$1.21x10^2$	$1.61x10^2$	$2.01x10^2$	$2.41x10^2$	$2.81x10^2$
ø20	Push/Pull	$1.26x10^2$	$1.88x10^2$	$2.51x10^2$	$3.14x10^2$	$3.77x10^2$	$4.40x10^2$
ø25	Push/Pull	$1.96x10^2$	$2.95x10^2$	$3.93x10^2$	$4.91x10^2$	$5.89x10^2$	$6.87x10^2$
ø32	Push/Pull	$3.22x10^2$	$4.83x10^2$	$6.43x10^2$	$8.04x10^2$	$9.65x10^2$	$1.13x10^3$

SCP*3
CMK2
CMA2
SCM
SCG
SCA2
SCS2
CKV2
CAV2/COVP/N2
SSD2
SSG
SSD
CAT
MDC2
MVC
SMG
MSD/MSDG
FC*
STK
SRL3
SRG3
SRM3
SRT3
MRL2
MRG2
SM-25
ShkAbs
FJ
FK
Spd Contr
Ending

How to order

No switch (without magnet for switch)

MRL2-W – 6 ( ) C – 50 ———— C

With switch (built-in magnet for switch)

MRL2-WL – 6 ( ) C – 50 – T2H – R – C

Ⓐ Model No.

Ⓑ Bore size

Ⓒ Port thread *1

Ⓓ Cushion *2

Ⓔ Stroke *3

Ⓕ Switch model No. * indicates the lead wire length. *5

Ⓖ Switch quantity

Ⓗ Option *6

Code		Description
Ⓐ Model No.		
Basic	MRL2	No switch
	MRL2-L	With switch
	MRL2-F	Fine speed
	MRL2-LF	Fine speed, with switch
Simplified guide 1-piston	MRL2-G	No switch
	MRL2-GL	With switch
	MRL2-GF	Fine speed
	MRL2-GLF	Fine speed, with switch
Simplified guide 2-piston	MRL2-W	No switch
	MRL2-WL	With switch
	MRL2-WF	Fine speed
	MRL2-WLF	Fine speed, with switch

Ⓑ Bore size (mm)	
6	ø6
10	ø10
16	ø16
20	ø20
25	ø25
32	ø32

Ⓒ Port thread	
Blank	Rc thread
N	NPT thread (ø25 and over) (made-to-order product)
G	G thread (ø25 and over) (made-to-order product)

Ⓓ Cushion	
Blank	Rubber cushion
C	Rubber-air cushion

Ⓔ Stroke (mm)

Bore size	Stroke *4	Custom stroke
ø6	1 to 300	In 1 mm increments
ø10	1 to 500	
ø16	1 to 1000	
ø20 to ø32	1 to 1500	

Ⓕ Switch model No.

Axial lead wire	Radial lead wire	Contact	Voltage AC	Voltage DC	Indicator	Lead wire
T1H*	T1V*	Proximity	●		1-color LED	2-wire
T2H*	T2V*			●		
T3H*	T3V*			●		3-wire
T2WH*	T2WV*			●	2-color LED	2-wire
T2YH*	T2YV*			●		
T3WH*	T3WV*			●		3-wire
T3YH*	T3YV*			●		
T3PH*	T3PV*			●	1-color LED	

*** Lead wire length**	
Blank	1 m (standard)
3	3 m (option)
5	5 m (option)

Ⓖ Switch quantity	
R	1 on R side
L	1 on L side
D	2
T	3
4	4 (when there are more than 4 switches, indicate switch quantity.)

Ⓗ Option	
C	With shock absorber (basic cannot be selected.)
S	With scraper (fine speed cannot be selected)
R	Common piping with switch (basic and ø6 cannot be selected.)

Precautions for model No. selection

*1 : When the cushion is a rubber cushion (blank), the port thread will be the following.
NPT thread: NN G thread: GN

*2 : In the case of MRL2-G and W with the "C" rubber-air cushion, the stopper protrudes from the end plate by approximately 1 mm at shipment. Note that the rubber-air cushion may not function if the stopper is moved to adjust the stroke.

*3 : Refer to the following table for max. stroke with switch.

*4 : Refer to page 1740 for min. stroke with switch and max. stroke for fine speed.

*5 : Switches other than Ⓕ Switch model No. are also available. (Made to order) Refer to Ending Page 1 for details.

***6 : When selecting a common piping with "R" switch, select the model No. with a switch (MRL2-*L).**

Bore size (mm)	Max. stroke with switch (mm)
ø6	200
ø10	300
ø16	500
ø20	700
ø25	700
ø32	700

[Example of model No.]

MRL2-WL-10-50-T2H-R-C

Model: Rodless cylinder

Ⓐ Model No. : Simplified guide 2-piston
Ⓑ Bore size : ø10 mm
Ⓒ Port thread : Rc thread
Ⓓ Cushion : Rubber cushion
Ⓔ Stroke : 50 mm
Ⓕ Switch model No. : Proximity switch T2H
Ⓖ Switch quantity : 1 on R side
Ⓗ Option : With shock absorber

How to order switch

SW – T2H

Switch model No.
(Item Ⓕ on page 1742)

How to order discrete shock absorber

Used when changing from the standard to that with a shock absorber

MRL2 – W/G – 25 – C

Bore size
(Item Ⓑ on page 1742)

· Shock absorber and mounting nut (hexagon nut) set of 1 each.

(Reference)
Applicable shock absorber model No.

Model	Shock absorber model No.
MRL2-W-6, MRL2-G-6	NCK-00-0.1
MRL2-W-10, MRL2-G-10	NCK-00-0.1-C
MRL2-W-16, MRL2-G-16	NCK-00-0.3-C
MRL2-W-20, MRL2-G-20	NCK-00-0.7-C
MRL2-W-25, MRL2-G-25	NCK-00-1.2-C
MRL2-W-32, MRL2-G-32	NCK-00-1.2-C

Clean-room specifications (Catalog No. CB-033SA)

● Anti-dust generation structure for use in cleanrooms

MRL2 - * - ····· - P72

MRL2 - * - ····· - P52

Specifications for rechargeable battery (Catalog No. CC-1226A)

● Design compatible with rechargeable battery manufacturing process

MRL2 - ····· - P4*

Internal structure and parts list MRL2 (basic)

● MRL2 (basic)

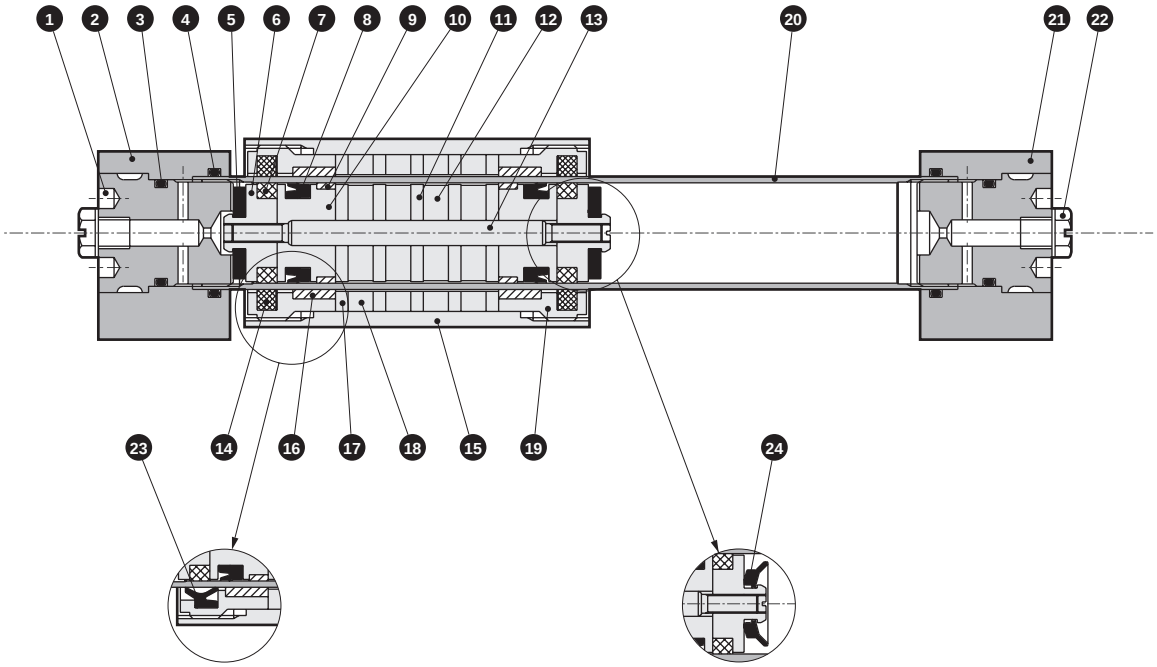

With scraper
option codes “S” and “P72”

Cushion code “C”
Rubber-air cushioned

Cannot be disassembled

Parts list

No.	Part name	Material	Remarks	No.	Part name	Material	Remarks
1	End cap	Aluminum alloy	Chromate	13	Piston shaft	Stainless steel	
2	End plate (L)	Aluminum alloy	Alumite	14	Lube keeping structure (for slider)	Special rubber	None with P72
3	O-ring	Nitrile rubber		15	Slider	Aluminum alloy	Alumite
4	O-ring	Nitrile rubber		16	Slider wear ring	Polyacetal resin	
5	Cushion rubber	Urethane rubber		17	Slider yoke	Steel	Zinc chromate
6	Piston (2)	Aluminum alloy	Chromate	18	Magnet	Special alloy	
7	Lube keeping structure (for piston)	Special rubber		19	Slider cover	Aluminum alloy	Chromate
8	Piston packing	Nitrile rubber		20	Cylinder tube	Stainless steel	
9	Piston wear ring	Polyacetal resin		21	End plate (R)	Aluminum alloy	Alumite
10	Piston (1)	Aluminum alloy	Chromate	22	Plug	Copper alloy or steel	
11	Piston yoke	Steel	Zinc chromate	23	Scraper	Urethane rubber	
12	Magnet	Special alloy		24	Rubber-air cushion	Special rubber	

Note: The magnetic strength of the embedded magnet is powerful. Do not disassemble.

Internal structure and parts list MRL2 (basic)

● MRL2-L (with switch)

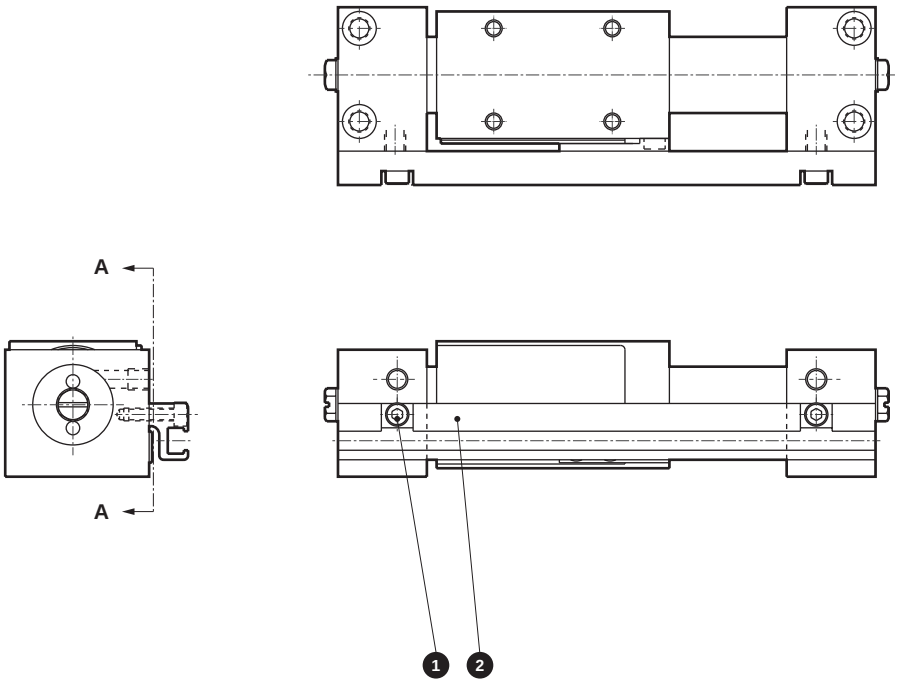

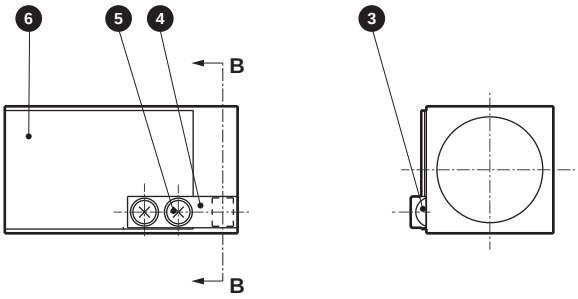

A-A arrow view

Cross section B-B

Cannot be disassembled

● Only available with MRL2-L-6

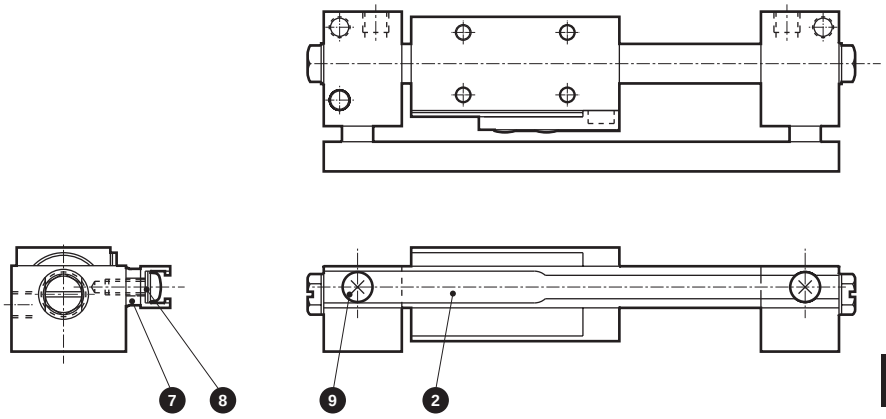

Cannot be disassembled

Parts list

No.	Part name	Material	Remarks	No.	Part name	Material	Remarks
1	Hexagon socket head cap screw	Stainless steel		6	Shield plate	Steel	Nickeling
2	Switch rail	Aluminum alloy	Alumite	7	Spacer	Copper alloy	Nickeling
3	Magnet	Special alloy		8	Plain washer	Stainless steel	
4	Magnet holder	Polyacetal resin		9	Cross-recessed pan head machine screw	Stainless steel	
5	Cross-recessed pan head machine screw	Stainless steel					

SCP*3
CMK2
CMA2
SCM
SCG
SCA2
SCS2
CKV2
CAV2/ COVP/N2
SSD2
SSG
SSD
CAT
MDC2
MVC
SMG
MSD/ MSDG
FC*
STK
SRL3
SRG3
SRM3
SRT3
MRL2
MRG2
SM-25
ShkAbs
FJ
FK
Spd Contr
Ending

Dimensions: MRL2 (basic)

● MRL2 (basic) without switch

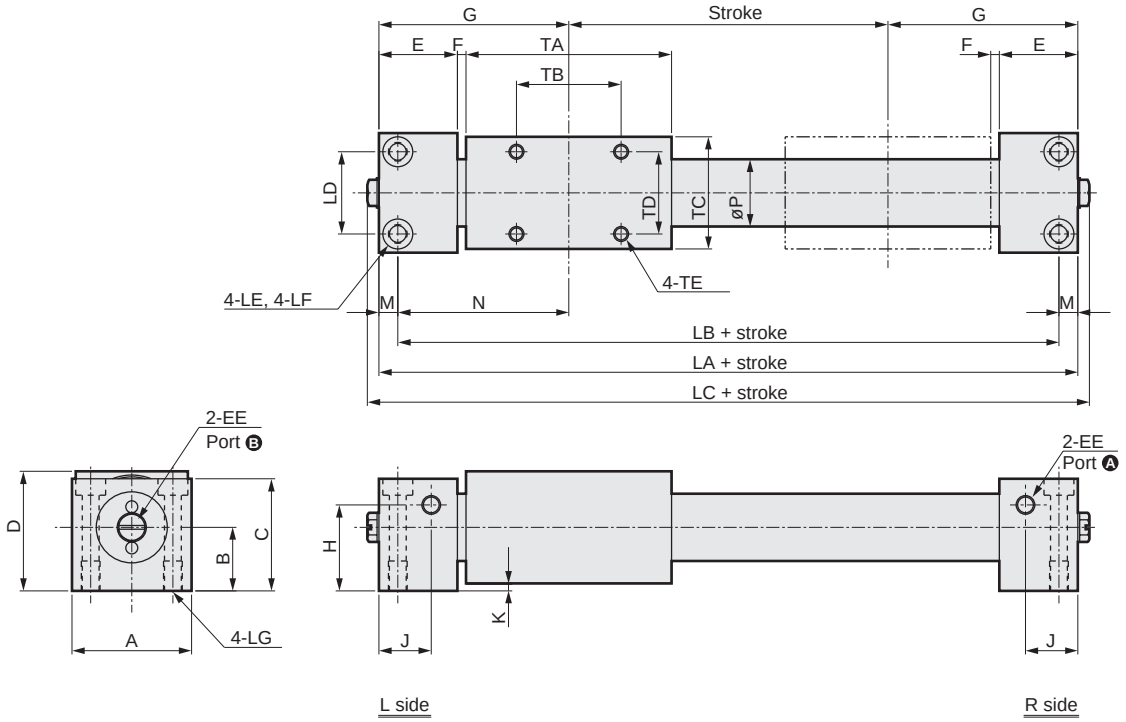

Note: It is possible to select A and B for air piping port.
The unit will be shipped with the plug assembled onto port B.
· ø6 to ø20: Plug (FPL-M5)
· ø25, ø32: Hexagon socket head cap taper thread plug

Code	Dimensions					Mounting dimensions							
Bore size (mm)	LA	LC	A	C	D	LB	LD	LE	LF	LG	TB	TD	TE
ø6	74	80.2	20	16.5	20	68	14	ø3.5	-	M4 depth 6	20	12	M3 depth 4.5
ø10	80	86.2	26	24	26	72	18	ø3.5	ø6.5 spot face depth 3.3	M4 depth 8	20	18	M3 depth 4.5
ø16	102	108.2	32	30	32	92	22	ø4.5	ø8 spot face depth 4.4	M5 depth 8	28	22	M4 depth 6
ø20	128	134.2	38	36	38	116	26	ø5.5	ø9.5 spot face depth 5.4	M6 depth 12	44	26	M4 depth 6
ø25	130	132.2	52	45	48	118	40	ø5.5	ø9.5 spot face depth 5.4	M6 depth 12	40	30	M6 depth 6
ø32	138	140.2	60	53	56	124	46	ø6.9	ø11 spot face depth 6.5	M8 depth 12	40	40	M6 depth 9

Code	General dimensions												
Bore size (mm)	B	E	EE	F	G	H	J	K	M	N	P	TA	TC
ø6	11	15	M5 depth 4	2	37	9	9.5	2	3	34	7.6	40	18
ø10	14	18	M5 depth 4	2	40	5.5	10	2	4	36	12	40	24
ø16	17	21	M5 depth 4	2.5	51	23	14	2	5	46	18	55	30
ø20	20	24	M5 depth 4	3	64	28	15.5	2	6	58	23	74	36
ø25	25.5	27	Rc1/8	3	65	29	17	3	6	59	28	70	45
ø32	29.5	27	Rc1/8	3	69	37	17	3	7	62	35	78	53

Dimensions: MRL2 (basic)

● MRL2-L (basic) with switch

● For ø6 ● For ø10 ● For ø16 to ø32

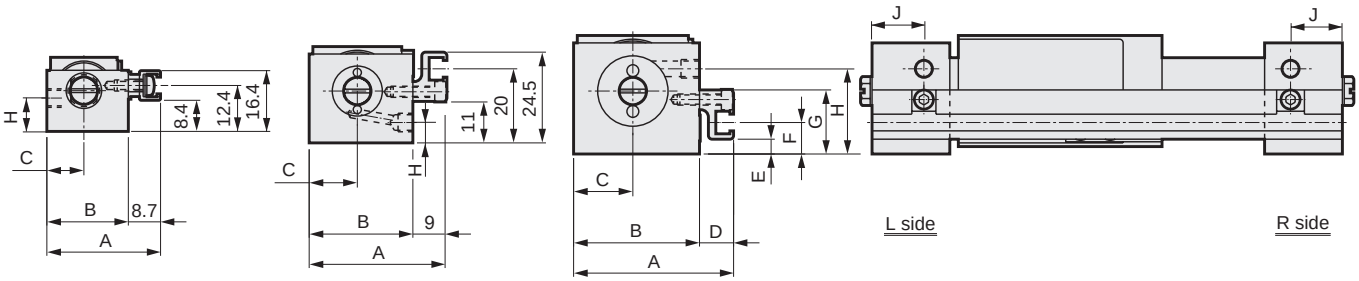

Code / Bore size (mm)	A	B	C	D	E	F	G	H	J
ø6	30.7	22	10	-	-	-	-	9	9.5
ø10	37	28	13	-	-	-	-	5.5	10
ø16	43	34	16	9.0	4	8.5	17.3	23	14
ø20	49	40	19	9.0	9	13.5	22.3	28	15.5
ø25	60.7	52	26	8.7	2	7.5	21	29	17
ø32	68.7	60	30	8.7	10	15.5	29	37	17

Internal structure and parts list MRL2-G (simplified guide 1-piston)

● MRL2-G (simplified guide 1-piston)

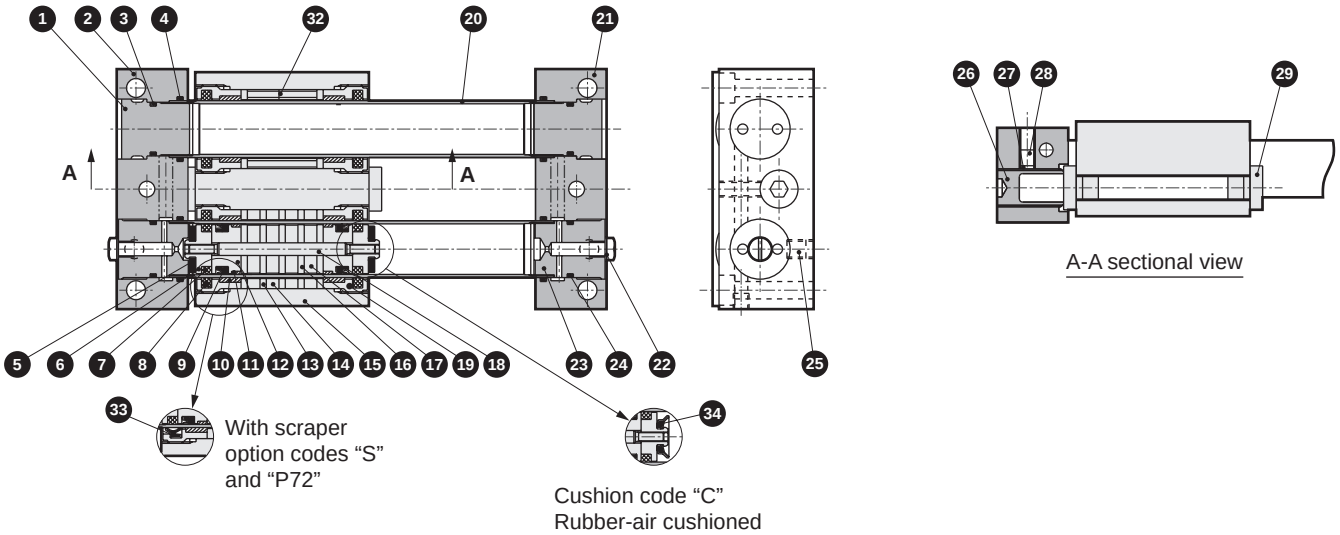

● MRL2-G-*-C (with shock absorber)

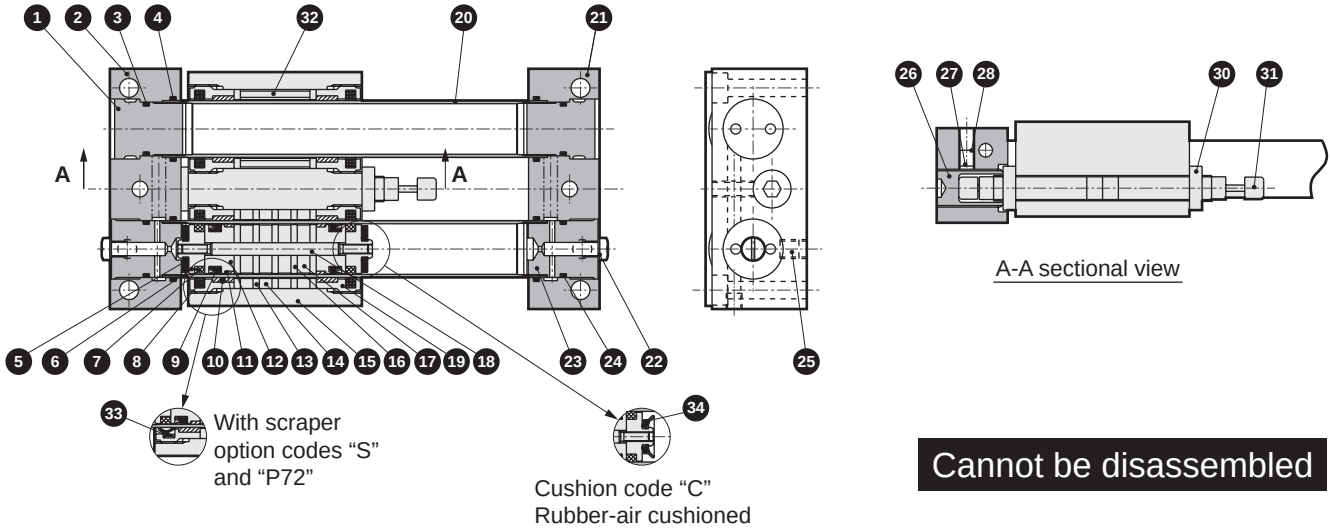

Cannot be disassembled

Parts list

No.	Part name	Material	Remarks	No.	Part name	Material	Remarks
1	End cap	Aluminum alloy	Chromate	18	Piston shaft	Stainless steel	
2	End plate (L)	Aluminum alloy	Alumite	19	Slider cover	Aluminum alloy	Chromate
3	O-ring	Nitrile rubber		20	Cylinder tube	Stainless steel	
4	O-ring	Nitrile rubber		21	End plate (R)	Aluminum alloy	Alumite
5	Cushion rubber	Urethane rubber		22	Plug	Copper alloy or steel	
6	Piston (2)	Aluminum alloy	Chromate	23	End cap	Aluminum alloy	Chromate
7	Lube keeping structure (for piston)	Special rubber		24	O-ring	Nitrile rubber	
8	Lube keeping structure (for slider)	Special rubber	None with P72	25	Hexagon socket set screw	Alloy steel	
9	Piston packing	Nitrile rubber		26	Stopper	Alloy steel	Nickeling
10	Slider wear ring	Polyacetal resin		27	Set shoe	Aluminum alloy	
11	Piston wear ring	Polyacetal resin		28	Hexagon socket set screw	Stainless steel	
12	Piston (1)	Aluminum alloy	Chromate	29	Stopper bolt	Steel	Nickeling
13	Slider yoke	Steel	Zinc chromate	30	Hexagon nut	Steel	
14	Magnet	Special alloy		31	Shock absorber		
15	Slider	Aluminum alloy	Alumite	32	Spacer	Stainless steel	
16	Piston yoke	Steel	Zinc chromate	33	Scraper	Urethane rubber	
17	Magnet	Special alloy		34	Rubber-air cushion	Special rubber	

Note: The magnetic strength of the magnet is powerful. Do not disassemble.

Internal structure and parts list MRL2-G (simplified guide 1-piston)

● MRL2-GL (with switch)

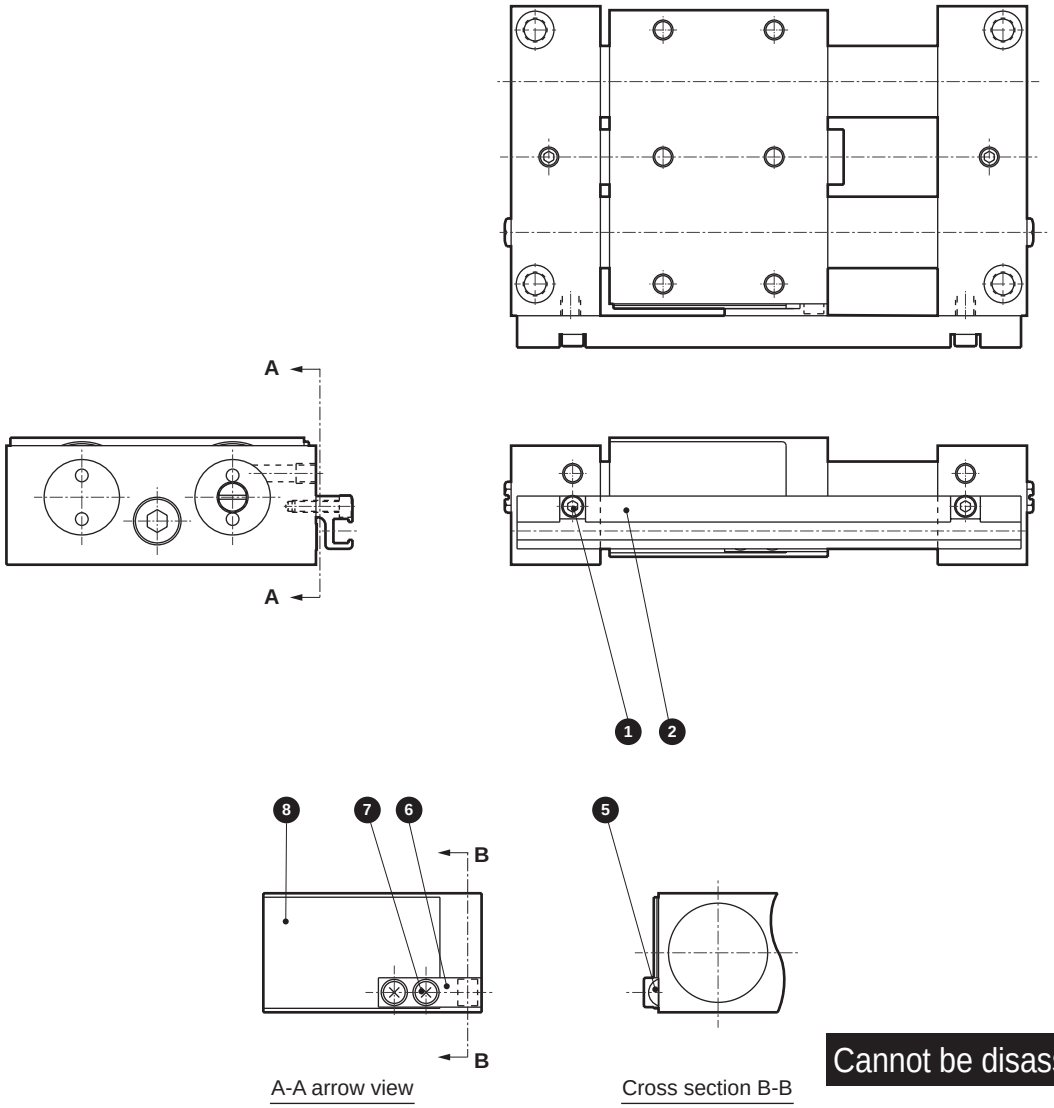

Cannot be disassembled

● MRL2-GL-*-R (common piping with switch)

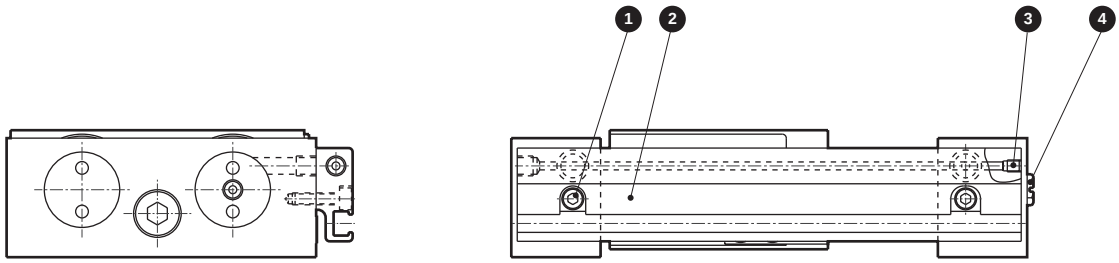

Cannot be disassembled

Parts list

No.	Part name	Material	Remarks	No.	Part name	Material	Remarks
1	Hexagon socket head cap screw	Stainless steel		5	Magnet	Special alloy	
2	Switch rail	Aluminum alloy	Alumite	6	Magnet holder	Polyacetal resin	
3	Hexagon socket set screw	Stainless steel		7	Cross-recessed pan head machine screw	Stainless steel	
4	Plug	Copper alloy or steel		8	Shield plate	Steel	Nickeling

SCP*3
CMK2
CMA2
SCM
SCG
SCA2
SCS2
CKV2
CAV2/ COVP/N2
SSD2
SSG
SSD
CAT
MDC2
MVC
SMG
MSD/ MSDG
FC*
STK
SRL3
SRG3
SRM3
SRT3
MRL2
MRG2
SM-25
ShkAbs
FJ
FK
Spd Contr
Ending

Internal structure and parts list MRL2-W (simplified guide 2-piston)

● MRL2-W (simplified guide 2-piston)

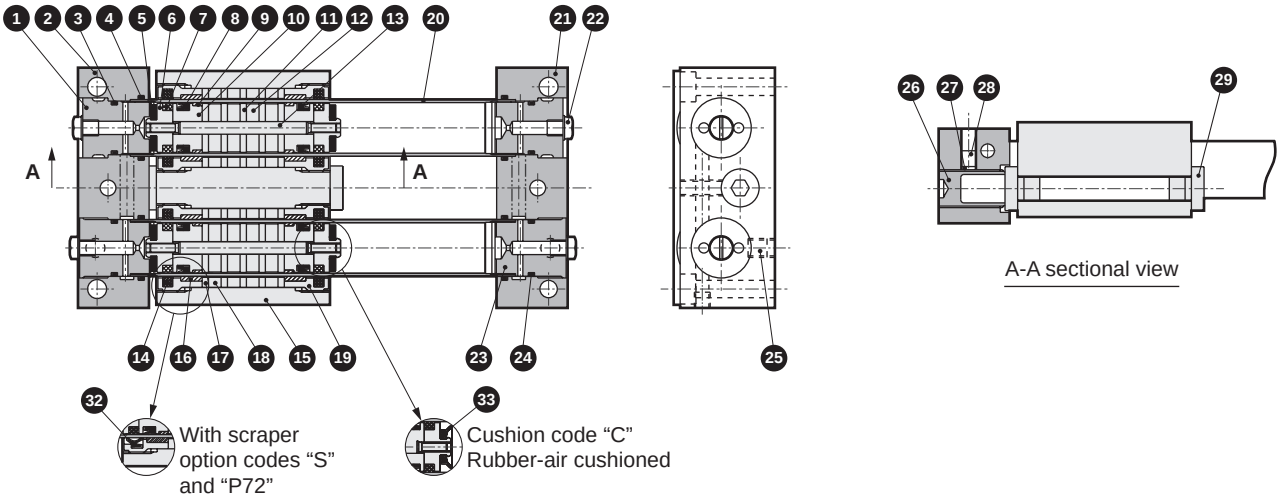

● MRL2-W-*-C (with shock absorber)

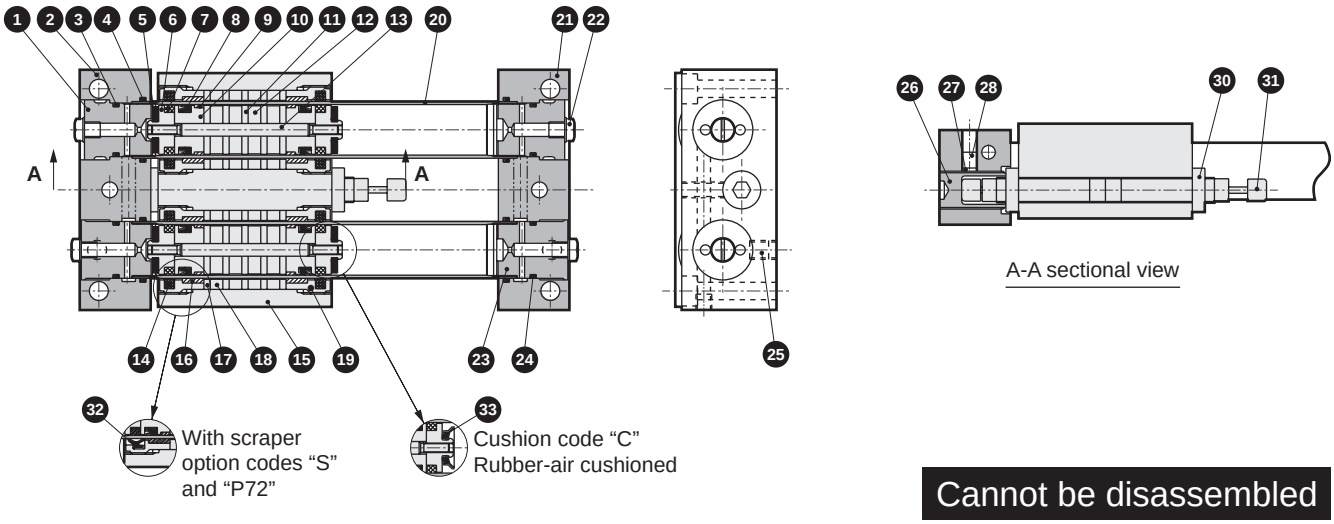

Cannot be disassembled

Parts list

No.	Part name	Material	Remarks	No.	Part name	Material	Remarks
1	End cap	Aluminum alloy	Chromate	17	Slider yoke	Steel	Zinc chromate
2	End plate (L)	Aluminum alloy	Alumite	18	Magnet	Special alloy	
3	O-ring	Nitrile rubber		19	Slider cover	Aluminum alloy	Chromate
4	O-ring	Nitrile rubber		20	Cylinder tube	Stainless steel	
5	Cushion rubber	Urethane rubber		21	End plate (R)	Aluminum alloy	Alumite
6	Piston (2)	Aluminum alloy	Chromate	22	Plug	Copper alloy or steel	
7	Lube keeping structure (for piston)	Special rubber		23	End cap	Aluminum alloy	Chromate
8	Piston packing	Nitrile rubber		24	O-ring	Nitrile rubber	
9	Piston wear ring	Polyacetal resin		25	Hexagon socket set screw	Alloy steel	
10	Piston (1)	Aluminum alloy	Chromate	26	Stopper	Alloy steel	Nickeling
11	Piston yoke	Steel	Zinc chromate	27	Set shoe	Aluminum alloy	
12	Magnet	Special alloy		28	Hexagon socket set screw	Stainless steel	
13	Piston shaft	Stainless steel		29	Stopper bolt	Steel	Nickeling
14	Lube keeping structure (for slider)	Special rubber		30	Hexagon nut	Steel	
15	Slider	Aluminum alloy	Alumite	31	Shock absorber		
16	Slider wear ring	Polyacetal resin		32	Scraper	Urethane rubber	
				33	Rubber-air cushion	Special rubber	

Note: The magnetic strength of the magnet is powerful. Do not disassemble.

Internal structure and parts list MRL2-W (simplified guide 2-piston)

● MRL2-WL (with switch)

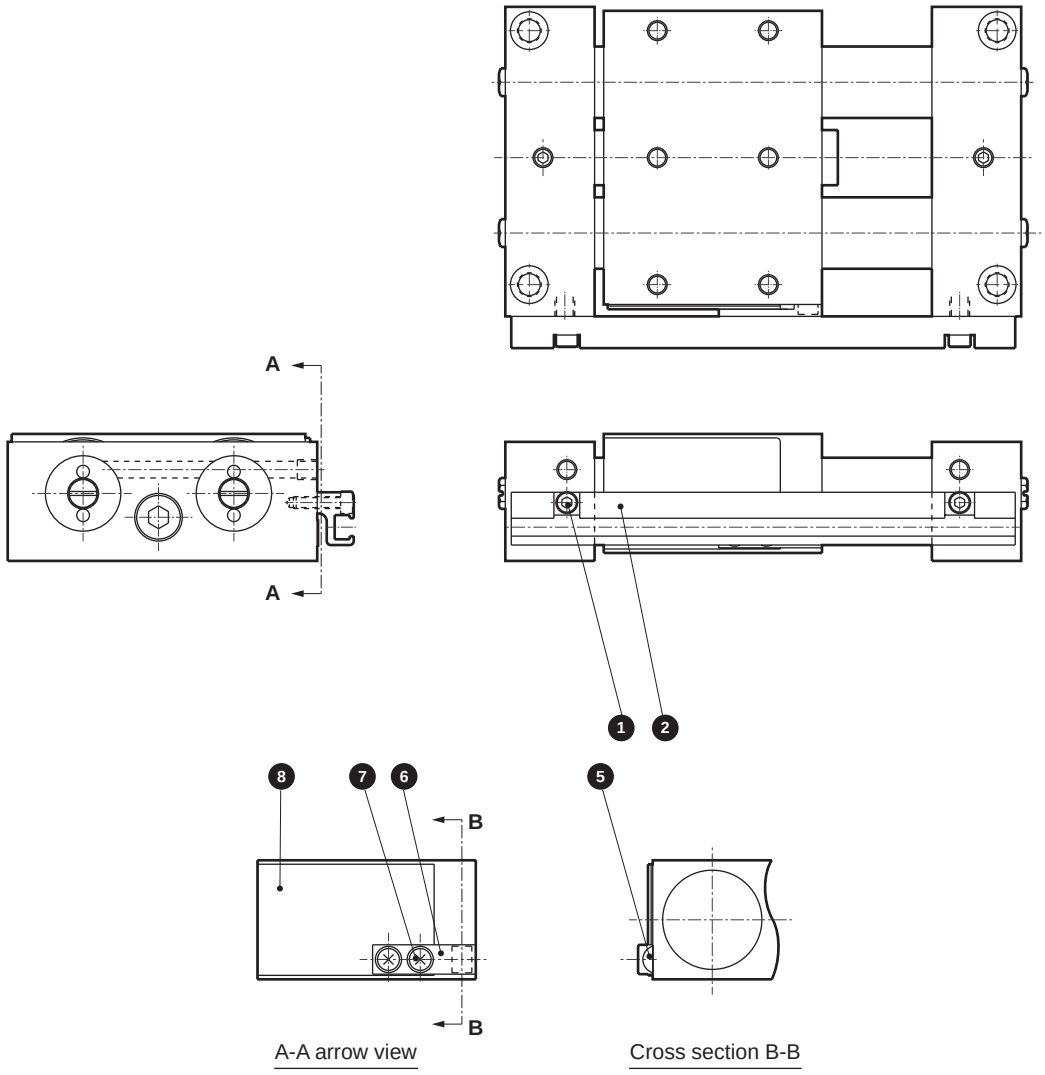

Cannot be disassembled

● MRL2-WL-*-R (common piping with switch)

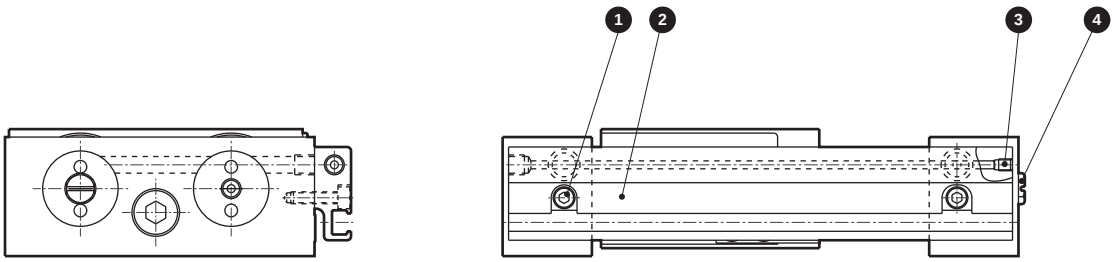

Cannot be disassembled

Parts list

No.	Part name	Material	Remarks	No.	Part name	Material	Remarks
1	Hexagon socket head cap screw	Stainless steel		5	Magnet	Special alloy	
2	Switch rail	Aluminum alloy	Alumite	6	Magnet holder	Polyacetal resin	
3	Hexagon socket set screw	Stainless steel		7	Cross-recessed pan head machine screw	Stainless steel	
4	Plug	Copper alloy or steel		8	Shield plate	Steel	Nickeling

Dimensions: MRL2-G (simplified guide 1-piston)/MRL2-W (simplified guide 2-piston)

- MRL2-G (simplified guide 1-piston) without switch
- MRL2-W (simplified guide 2-piston) without switch

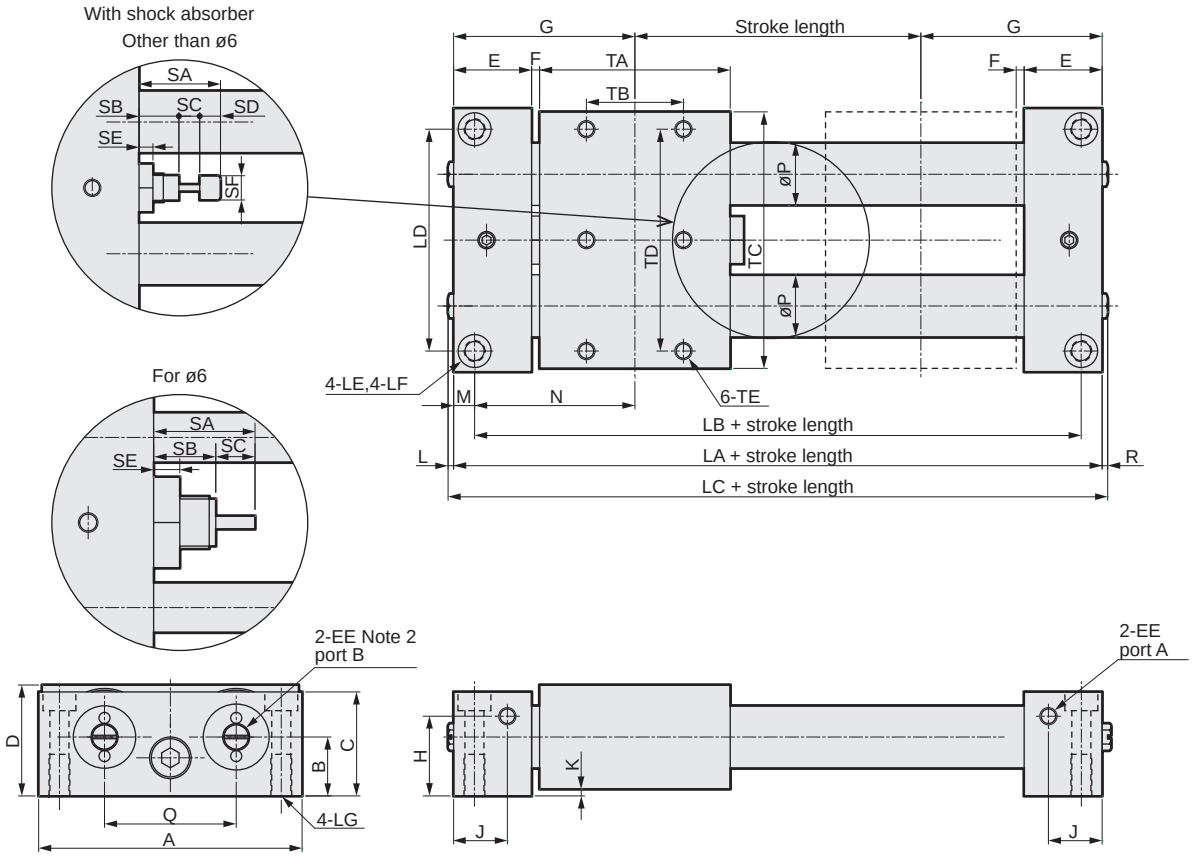

*1: It is possible to select Ⓐ and Ⓑ for air piping port.
The unit will be shipped with the plug assembled onto port Ⓑ.
· ø6 to ø20: Plug (FPL-M5)
· ø25, ø32: Hexagon socket head cap taper thread plug

*2: MRL2-W is "4-EE".

Code	Dimensions							Mounting dimensions							
Bore size (mm)	LA	LC	L	R	A	C	D	LB	LD	LE	LF	LG	TB	TD	TE
ø6	74	80.2	3.1	3.1	46	20	24	68	40	ø3.5	-	M4 depth 6	20	38	M3 depth 4.5
ø10	83	87.2	1.6	2.6	64	24	26	74	54	ø4.5	ø8 spot face depth 4.4	M5 depth 10	20	55	M4 depth 6
ø16	105	109.2	1.6	2.6	76	30	32	93	64	ø5.5	ø9.5 spot face depth 5.4	M6 depth 12	28	64	M5 depth 8
ø20	131	135.2	1.6	2.6	90	36	38	119	77	ø6.9	ø11 spot face depth 6.5	M8 depth 12	44	78	M5 depth 8
ø25	136	138	0	2	108	45	48	122	90	ø6.9	ø11 spot face depth 6.5	M8 depth 12	40	90	M6 depth 9
ø32	144	146	0	2	126	53	56	130	108	ø6.9	ø11 spot face depth 6.5	M8 depth 12	40	104	M6 depth 9

Code	General dimensions																			
Bore size (mm)	B	E	EE	F	G	H	J	K	M	N	P	Q	SA	SB	SC	SD	SE	SF	TA	TC
ø6	13	15	M5 depth 4	2	37	9	9.5	2	3	34	7.6	26	15.5	9.5	6	-	4	-	40	44
ø10	14	19.5	M5 depth 4	2	41.5	5.5	11.5	2	4.5	37	12	34	20.5	9.5	5	6	4	6	40	62
ø16	17	22.5	M5 depth 4	2.5	52.5	23	15.5	2	6	46.5	18	38	23.5	11.5	6	6	4	7	55	74
ø20	20	25.5	M5 depth 4	3	65.5	28	17	2	6	59.5	23	46	25.5	10.5	8	7	4	8	74	88
ø25	25.5	30	Rc1/8	3	68	29	20	3	7	61	28	50	30	12.5	10	7.5	5	10	70	101
ø32	29.5	30	Rc1/8	3	72	37	20	3	7	65	35	60	30	12.5	10	7.5	5	10	78	119

Dimensions: MRL2-G (simplified guide 1-piston)/MRL2-W (simplified guide 2-piston)

- MRL2-GL (simplified guide 1-piston) with switch
- MRL2-WL (simplified guide 2-piston) with switch

CAD

- For ø6

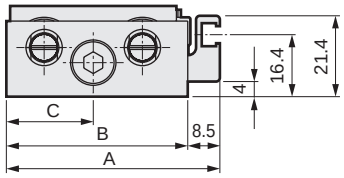

- For ø10

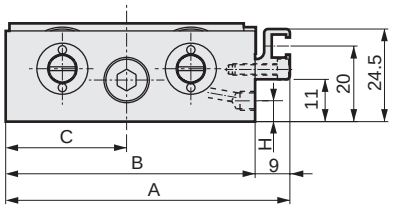

- For ø16 to ø32

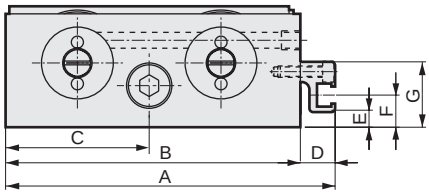

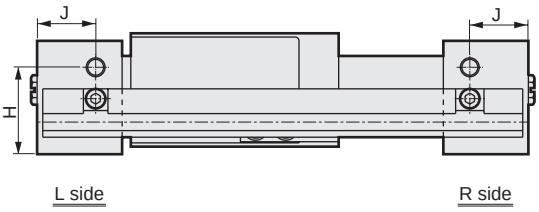

Code / Bore size (mm)	A	B	C	D	E	F	G	H	J
ø6	56.5	48	23	-	-	-	-	9	9.5
ø10	75	66	32	-	-	-	-	5.5	11.5
ø16	87	78	38	9	4	8.5	17.3	23	15.5
ø20	101	92	45	9	9	13.5	22.3	28	17
ø25	116.7	108	54	8.7	2	7.5	21	29	20
ø32	134.7	126	63	8.7	10	15.5	29	37	20

- MRL2-GL-*-R (simplified guide 1-piston) common piping with switch
- MRL2-WL-*-R (simplified guide 2-piston) common piping with switch

- For ø10

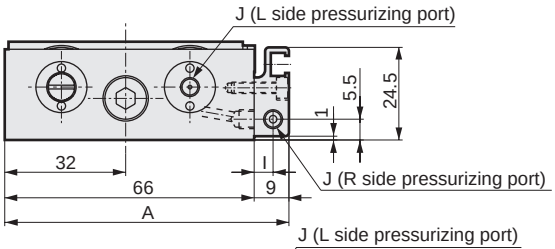

- For ø16 to ø32

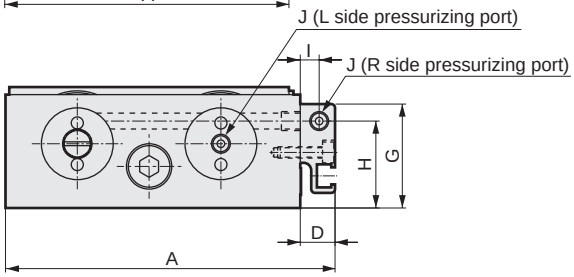

Code / Bore size (mm)	A	D	G	H	I	J
ø10	75	-	-	-	5	M5 depth 4
ø16	87	9	27.5	23	5	M5 depth 4
ø20	101	9	32.5	28	5	M5 depth 4
ø25	122	14	45	29	7.5	Rc1/8
ø32	140	14	53	37	7.5	Rc1/8

SCP*3
CMK2
CMA2
SCM
SCG
SCA2
SCS2
CKV2
CAV2/COVP/N2
SSD2
SSG
SSD
CAT
MDC2
MVC
SMG
MSD/MSDG
FC*
STK
SRL3
SRG3
SRM3
SRT3
MRL2
MRG2
SM-25
ShkAbs
FJ
FK
Spd Contr
Ending

Switch mounting position dimensions

● MRL2-L-* (switch: T2H/v, T3H/v, T2WH/v, T3WH/v)
GL
WL

● For ø6 ● For ø10 ● For ø16 to ø32

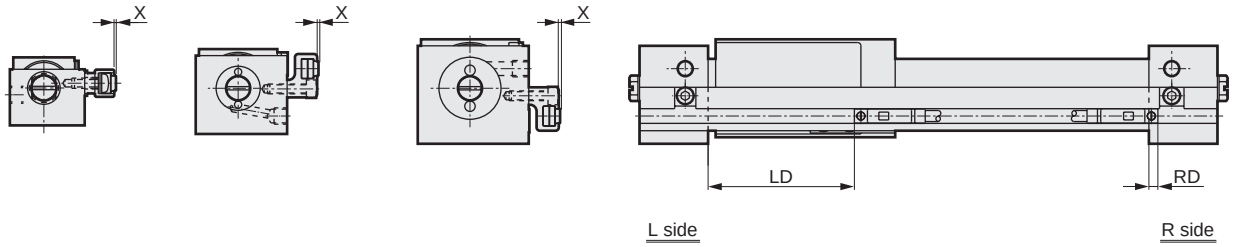

Code	T2 H/v, T3 H/v			T2W H/v, T3W H/v		
Bore size (mm)	RD	LD	X	RD	HD	X
ø6	3.5	27	0.5	1.5	29	0.5
ø10	2.5	27	0.5	0.5	29	0.5
ø16	2.5	44	0.5	0.5	46	0.5
ø20	1	63.5	0.5	-1	65.5	0.5
ø25	2	58	0.5	0	60	0.5
ø32	1.5	67.5	0.5	-0.5	69	0.5

● MRL2-L-* (switch: T1H/v, T2YH/v, T3YH/v)
GL
WL

● For ø6 ● For ø10 ● For ø16 to ø32

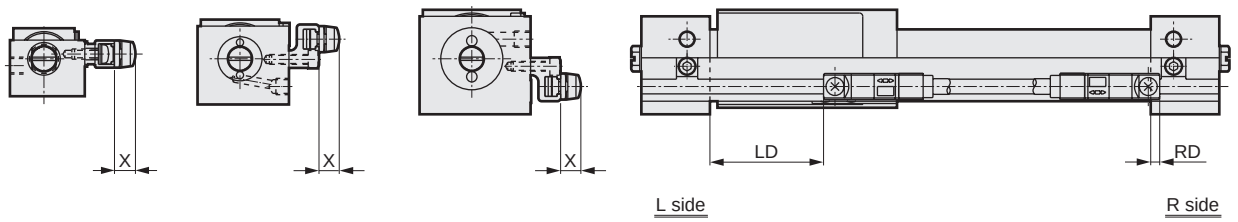

Code / Bore size (mm)	RD	LD	X
ø6	4.5	26	6(11.5)
ø10	3.5	26	6(11.5)
ø16	3.5	43	6(11.5)
ø20	2	62.5	6(11.5)
ø25	3	57	6(11.5)
ø32	2.5	66	6(11.5)

*1: Values in ( ) are for T1H/v.

MRL2 Series selection guide

STEP-1 Determination of allowable load

(1) Calculate all load (W) and moment (M1, M2, M3) per load.
(2) Divide each load by the max. value shown in the table below to find load/moment ratio, and confirm that the total is 1.0 or less.

$$\frac{W}{Wmax} + \frac{M1}{M1max} + \frac{M2}{M2max} + \frac{M3}{M3max} \leq 1.0$$

Max. allowable load weight

Descriptions / Bore size (mm)	MRL2		MRL2-G/MRL2-W			
	Vertical load W (N)	Bending moment M1 (N·m)	Vertical load W (N)	Bending moment M1 (N·m)	Radial moment M2 (N·m)	Torsion moment M3 (N·m)
ø6	10	0.1	20	0.2	0.1	0.2
ø10	15	0.3	30	0.6	0.2	0.6
ø16	35	1.2	70	2.4	0.5	2.4
ø20	60	2.5	120	5.0	1.0	5.0
ø25	73	3.3	146	6.6	3.7	6.6
ø32	89	4.5	178	9.0	5.3	9.0

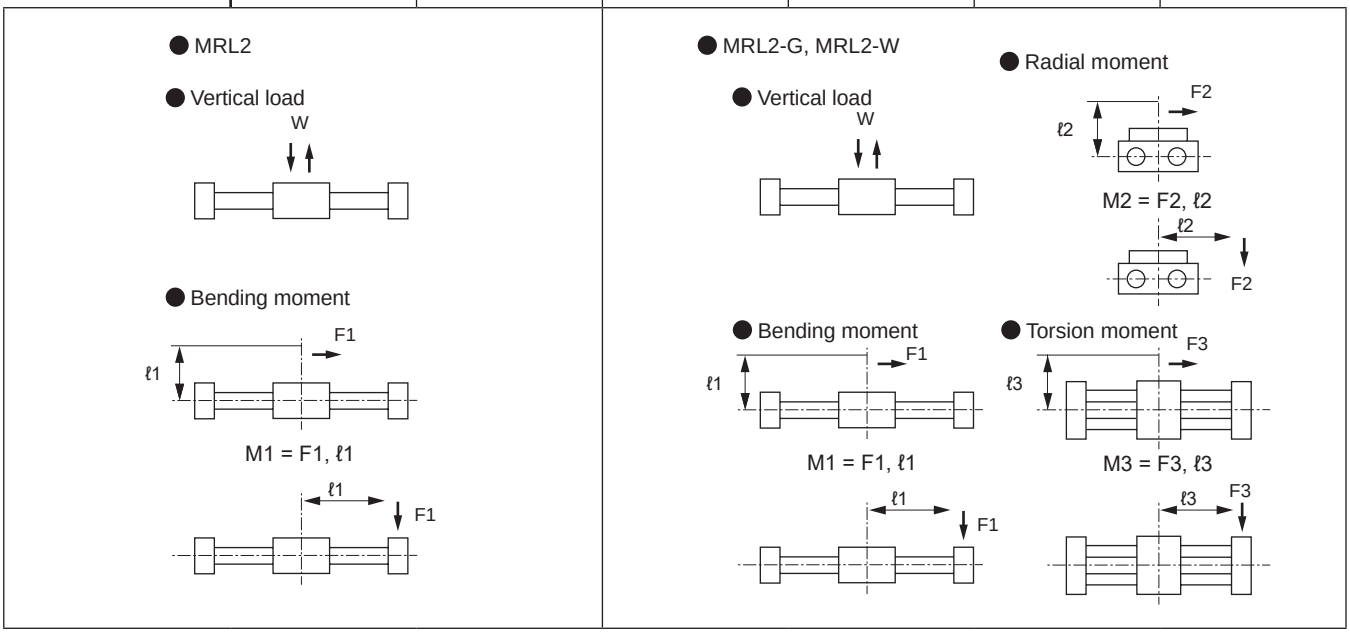

Note: Give sufficient consideration to inertia when the load moves or stops.

The value of the allowable vertical load W will vary depending on the stroke. Select so that the value falls within the graph of Fig 1.

Fig. 1 stroke and allowable vertical load relationship

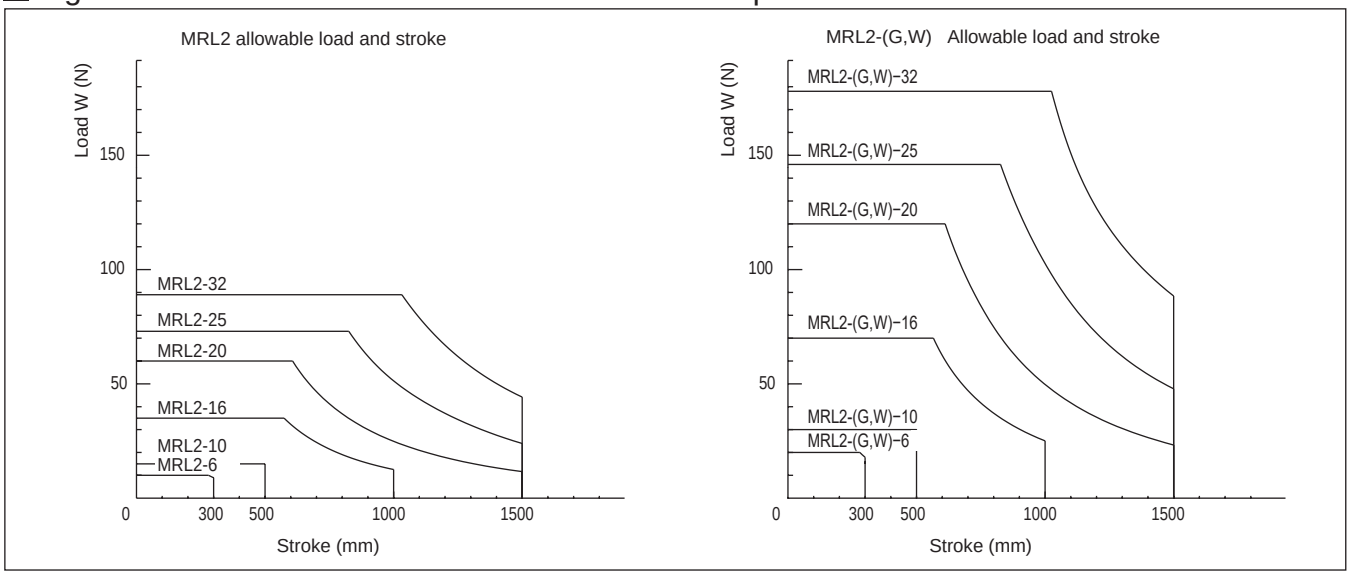

STEP-2 Calculation of load factor

1. Depending on the size and direction of the load as well as the mounting orientation, calculate the required thrust with Tables 2 and 3 below as guidelines.

■ Table 2

	Vertical load	Bending moment	Radial moment	Torsion moment
Size and direction of load	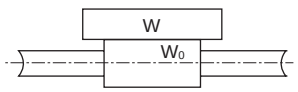	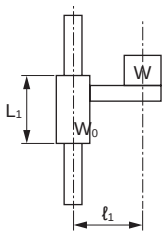	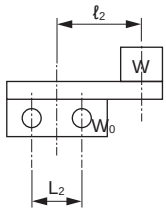	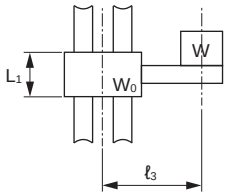
Mounting orientation	Horizontal	Vertical	Horizontal	Vertical
Required thrust	$F_N=0.2\ (W+W_0)$	$F_N=\dfrac{0.2\ W\ell_1}{L_1}+W+W_0$	$F_N=0.2\left(\dfrac{W\ell_2}{L_2}+W+W_0\right)$	$F_N=\dfrac{0.2\ W\ell_3}{L_1}+W+W_0$

As the slider rotates with the single, radial moment and torsion moment cannot be applied.

F_N : Required thrust (N)
W : Load (N)
W_0 : Slider self-weight (N)
ℓ_n (n = 1, 2, 3): Overhang (mm)
L_1 : Slider bearing pitch (mm)
L_2 : Pitch of guide (mm)

■ Table 3

Model No.	W_0	L_1	L_2
MRL2-6	0.4	27	-
10	0.6	27	-
16	1.2	39	-
20	2.4	58	-
25	3.8	70	-
32	5.2	78	-
MRL2-$^{G}_{W}$-6	0.9	27	26
10	1.7	27	34
16	3.0	39	38
20	5.9	58	46
25	8.5	70	50
32	11.9	78	60

2. Calculate the load factor from the required thrust calculated in 1 and ■ Table 4, Fig. 2. (Make sure that the load factor is less than or equal to approximately 50%.)

$$\text{Load factor } \alpha = \frac{F_N}{\frac{a}{100}\cdot A} \times 100$$

$$B = \frac{a}{100}\cdot A$$

F_N: Required thrust (N)
A : Theoretical thrust (N)
a: Thrust efficiency (%)
B: Effective thrust (N)

■ Table 4 Theoretical thrust table

N

Model No.	Indicator code / Working pressure MPa					
	0.2	0.3	0.4	0.5	0.6	0.7
MRL2,MRL2-G-6	-	8	11	14	17	20
10	-	24	31	39	47	55
16	40	60	80	101	121	141
20	63	94	126	157	188	220
25	98	147	196	245	295	344
32	161	241	322	402	483	563
MRL2-W-6	-	17	23	28	34	40
10	-	47	63	79	94	110
16	80	121	161	201	241	281
20	126	188	251	314	377	440
25	196	295	393	491	590	687
32	322	483	643	804	966	1130

* Note that the difference between effective thrust and theoretical thrust will be greater with a lower pressure due to the thrust efficiency being lower.

■ Fig. 2 Thrust efficiency

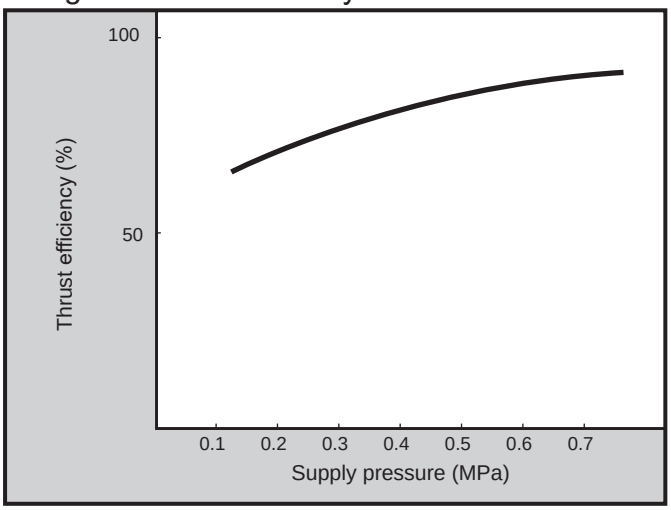

STEP-3 Formula for kinetic energy calculation

Calculate the kinetic energy from the load weight (m) and speed (V) and make sure that this is less than or equal to the allowed value listed in ■ Table 5.
When exceeding the allowable absorbed energy value, increase the cylinder size so that the value falls under the allowable absorbed energy or consider the use of an external shock absorber.
This speed is the velocity just before cushion entry and not the average speed, if it is unknown, calculate the cushion entry velocity by using formula (1).

$$E=\frac{1}{2}mV^2$$

$$Va=\frac{L}{t}$$

$$V=Va \times \left(1+1.5\frac{\alpha}{100}\right) \quad (1)$$

E : Kinetic energy (J)
m : Weight (kg)
V : Cushion entry velocity (m/s)
Va: Average speed (m/s)
L : Stroke (m)
t : Travel time (s)
α : Load factor (%)

■ Table 5 Allowable absorbed energy value

Bore size	Allowable absorbed energy (J)	
	MRL2	MRL2-G/W
ø6	0.006	0.12
ø10	0.028	0.12
ø16	0.100	0.25
ø20	0.265	0.58
ø25	0.283	0.74
ø32	0.523	0.74

■ Shock absorber specifications

Bore size	Max. absorbed energy (J)	Stroke (mm)
ø6	0.24	4
ø10	0.24	4
ø16	0.80	5.5
ø20	2.11	7.5
ø25	3.88	9.5
ø32	3.88	9.5

SCP*3
CMK2
CMA2
SCM
SCG
SCA2
SCS2
CKV2
CAV2/COVP/N2
SSD2
SSG
SSD
CAT
MDC2
MVC
SMG
MSD/MSDG
FC*
STK
SRL3
SRG3
SRM3
SRT3
MRL2
MRG2
SM-25
ShkAbs
FJ
FK
Spd Contr
Ending

STEP-4 Confirmation of inertia load

Confirm that the weight (m), overhang (l_n (n = 1, 3)), and cushion entry velocity (V) multiplied together and then divided by the value of A shown in the table below is less than or equal to 1.
When this value exceeds 1, increase the cylinder size so that this value becomes 1 or less or review the usage conditions.

Bore size	A	
	MRL2	MRL2-G/W
ø6	5.6	11.2
ø10	17	34
ø16	68	136
ø20	142	284
ø25	187	374
ø32	255	510

m : Weight (kg)
l_n (n=1,3) : Overhang (mm)
V : Cushion entry velocity (m/s)

● MRL2

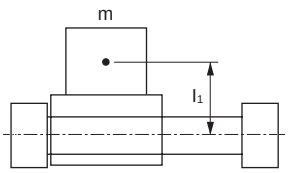

$$\frac{m \cdot l_1 \cdot V}{A} \leq 1$$

● MRL2-G,MRL2-W

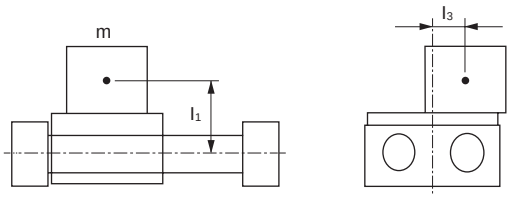

$$\frac{m \cdot (l_1 + l_3) \cdot V}{A} \leq 1$$

MRL2-G / MRL2-W slider runout amount

● Bending moment

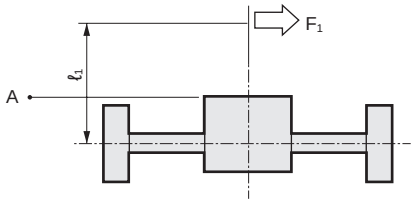

$M_1 = F_1 \cdot \ell_1$

● Radial moment

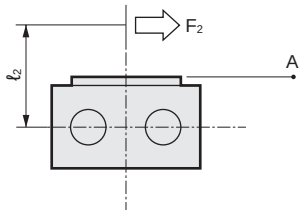

$M_2 = F_2 \cdot \ell_2$

● Torsion moment

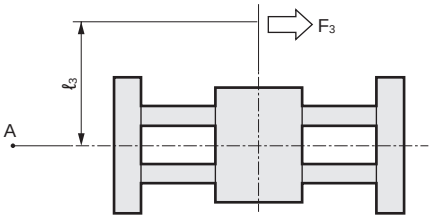

$M_3 = F_3 \cdot \ell_3$

Bore size	Moment load		Table runout amount at point A (± mm)		
	MRL2	MRL2-G,W	M_1 direction	M_2 direction	M_3 direction
ø6	M_1, M_3: 0.2 N·m	M_2: 0.1 N·m	1.5	1.46	1.05
ø10	M_1, M_3: 0.6 N·m	M_2: 0.2 N·m	1.61	1.12	0.92
ø16	M_1, M_3: 2.5 N·m	M_2: 0.5 N·m	1.3	1.16	0.87
ø20	M_1, M_2, M_3: 2.5 N·m		0.89	0.96	0.65
ø25	M_1, M_2, M_3: 5 N·m		1.1	0.92	0.7
ø32	M_1, M_2, M_3: 5 N·m		1.0	0.77	0.6

*1: Point A is a point that is 200 mm away from the center of the slider.

Rubber cushion and rubber-air cushion comparison data (reference values)

Measurement of the noise level (dB) generated when the piston collides at the end of the stroke.

Measuring conditions

1. Sample cylinder : MRL2 basic type, stroke 200 mm
2. Piston speed upon collision at end of stroke : V = 300 mm/S
3. Distance between noise level meter and cylinder : 0.25 m
4. Load : No load

Representative example Unit: dB

Bore size	Rubber cushion	Rubber-air cushion
ø6	51.2	44.7
ø10	51.2	45.6
ø16	63.4	48.2
ø20	75.9	59.3

Safety Precautions

Be sure to read this section before use.
Refer to Intro Page 73 for general information of the cylinder, and to Intro Page 80 for general information of the cylinder switch.

Product-specific cautions: Magnet rodless cylinder MRL2 Series

Design/selection

1. Common

CAUTION

■ Be careful of the gap between the end plate and the slider.
Be careful when operating the cylinder as getting a hand or finger caught in the unit may lead to injury.

■ Do not apply a load to the cylinder that is greater than or equal to the allowable load listed in the selection guide.

■ Do not use the product with the slider fixed.
Use the cylinder with the end plate fixed. Avoid use of the product with the slider fixed.

■ When fixing the basic type with switch with the guide, configure the rotational angle of the slider to be less than or equal to ± 1°.

■ Mount so that the slider functions with the min. working pressure value of all processes.
When the flatness of the surface for cylinder installation is poor, the min. working pressure will rise due to guide unit torsion and cause early wear of the bearing section. For this reason, mount the unit so that the slider functions with the min. working pressure value of all processes. Although mounting mating surfaces should be highly flat, adjust with shims when this cannot be confirmed.

■ Be careful to avoid scratching or denting the outer peripheral surface of the cylinder tube.
This will cause damage to the lube keeping structure, scraper, and slider wear ring and may lead to defective operation.

■ With the basic type MRL2, be careful of slider rotation.
Either connect with an external bearing or consider the use of MRL2-G or MRL2-W.

■ Do not use the product in a state where the slider is displaced.
When the slider has become displaced due to external force that is greater than or equal to the magnetic holding force, manually push the stroke end back to its original position.

■ Do not apply an eccentric load to the slider.
When the load and cylinder are direct mounted, their respective shaft center eccentricities cannot be absorbed, and lateral load applies, leading to misoperation (figure below left). Use with consideration for a connection method which enables absorption of this eccentricity and the self-weight deflection of the cylinder. The figure below right shows recommended mounting.

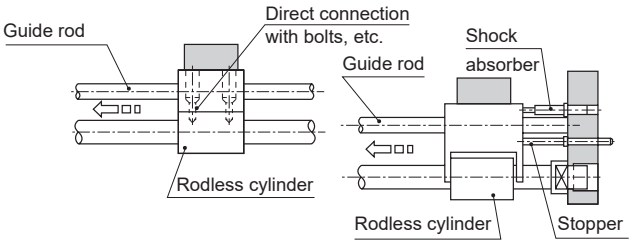

■ The cylinder switch may malfunction if there is a magnetic substance such as a metal plate installed adjacently. Check that a distance of 4 mm is provided from the switch surface.

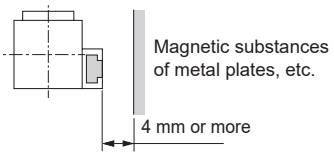

■ When using cylinders adjacent with each other or when using other magnetic sensors nearby, in order to prevent malfunctioning due to the leaked magnetic field of the cylinder embedded magnet, make sure that the distance from the surface of the slider to the other magnetic sensors is separated by at least the values listed below.

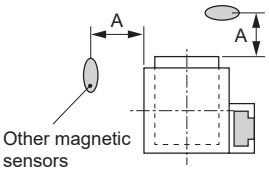

Bore size	A(mm)
ø6	10
ø10	20
ø16	20
ø20	37
ø25	50
ø32	80

When this distance is dimension A or less, malfunctions can be prevented by placing a magnetic substance (steel plate with thickness of 2 mm or more) between the slider and the others.

■ When using in a dusty environment, it is recommended to select the type with scraper (option S).

2. Rubber-air cushioned MRL2-*C

■ Note that, structurally, the stroke end position cannot be retained if air supply is cut off.
When detecting the stroke end by switch, set the switch position with pneumatic pressure applied, as otherwise the position may be out of the detection range.

3. Fine speed MRL2-F

■ Use without lubrication.
Applying lubrication may cause changes in characteristics.

■ Assemble the speed controller near the cylinder.
When installed far from the cylinder, the speed becomes unstable. Use the SC-M3/M5-F, SC3W, SCD-M3/M5 or SC3U Series speed controller.

■ In general, the speed is stabler at higher air pressure and lower load factor.
Use at a 50% or less load factor.

■ Do not apply a lateral load to the slider.
Also install the sliding guide so that it is not twisted.
When the load or the resistance fluctuates, operation becomes unstable. With a large difference between static friction and kinematic friction of the guide, operation becomes unstable.

■ Avoid using this product where vibration is present.
The product will be adversely affected by vibration and operation will become unstable.

■ Stable speed control is achieved with a meter-out circuit.

● To make the operation even smoother at the start, add a meter-in circuit.

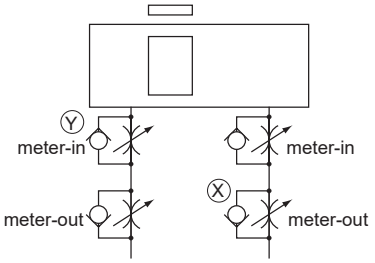

Adjustment method for speed when moving to the right

1. Adjust speed with Ⓧ speed controller
2. Narrow with Ⓨ speed controller until operation at start becomes smooth
3. Check the speed again.

(*1) As this circuit narrows the intake side, a small amount of time is required until it starts to operate. (This will vary depending on narrowing adjustment.) Take this into consideration before use.

(*2) For vertical mounting, combine the cylinder with a meter-out circuit, as it will fall under its own weight when a meter-in circuit is used.

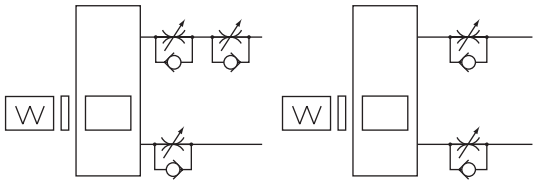

OK

✕ Falls under its own weight when lowering

(*3) Use the circuit shown in the figure below for the serial connection of the speed controllers.

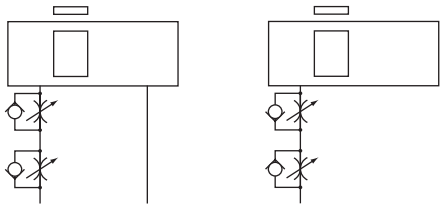

OK

✕ Speed control is unstable

Mounting, installation and adjustment

1. Common

⚠CAUTION

■ CKD's shock absorber is a repair part. Replace it when the energy absorption performance has degraded or the operation is not smooth.

2. Fine speed MRL2-*F

⚠CAUTION

■ Avoid using in environments with water vapor or high humidity or in alkaline atmospheres.

■ As compatible piping fittings are limited when with switch, refer to the table below to select the fitting.

· With switch

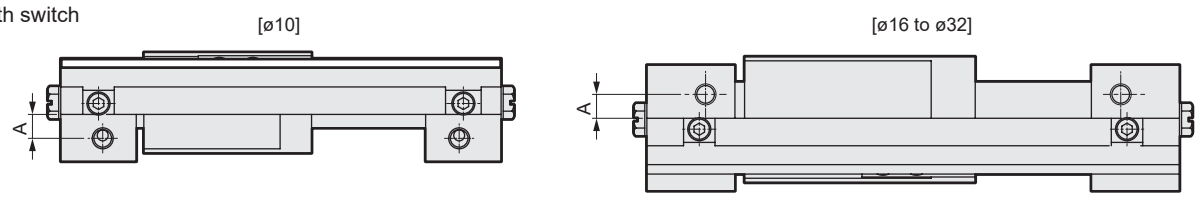

· Common piping with switch

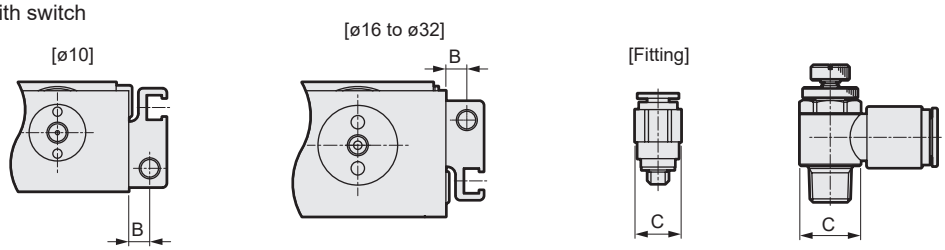

Item Bore size (mm)	Port size	Port position dimensions A	Port position dimensions B	Applicable fittings	Fitting O.D. øC
ø6	M5	-		SC3W-M5-4, SC3W-M5-6 SC3U-M5-4, SC3U-M5-6 GWS6-M5-S, GWS4-M5 etc.	ø11 or less
ø10		5.5	5		
ø16		5.5	5		
ø20		5.5	5		
ø25	Rc1/8	7.5	7.5	SC3W-6-4/6/8 GWS4-6, GWS6-6, GWS8-6 etc.	ø15 or less
ø32		7.5	7.5		

Note: A and B indicate the distance to the nearest interference part to the respective ports. The - means that there is no interference.
ø6 has no A dimension because the side surface port is on the opposite side from the switch rail.
(There is no interference with the switch rail.)
It also has no B dimension (port) because common piping with switch is not possible.

Use/maintenance

1. Common

⚠ WARNING

- The magnetic strength of the embedded magnet is powerful. Do not disassemble.
- With bore size of ø16 or less, because of changes in the cushion rigidity when left for long periods, the stroke may become slightly shorter than the standard value at the low pressure setting. Perform a trial run, such as operating several times and performing back-and-forth operation at high supply pressure.

2. Rubber-air cushioned MRL2-*C

⚠ CAUTION

- Do not rapidly discharge air from the cylinder after performing low speed operation outside the catalog specifications range. (Example: Removing piping or coupler, etc.)
  Otherwise the rubber air cushion may fall. Note that the possibility of occurrence of this may increase especially when the air pressure is high.

MRG2

Magnet rodless cylinder with high precision guide

Rodless

ø10/ø16/ø25

CONTENTS

Product introduction	1764
Series variation	1765
● Double acting (MRG2)	1766
Selection guide	1773
Technical data	1779
⚠ Safety precautions	1780

The cylinder switches T2YH, T2YV, T3YH, and T3YV are scheduled for end of production at the end of December 2023.

SCP*3
CMK2
CMA2
SCM
SCG
SCA2
SCS2
CKV2
CAV2/COVP/N2
SSD2
SSG
SSD
CAT
MDC2
MVC
SMG
MSD/MSDG
FC*
STK
SRL3
SRG3
SRM3
SRT3
MRL2
MRG2
SM-25
ShkAbs
FJ
FK
Spd Contr
Ending

Uses a guide with a rated load 1.5 times greater than previous models!

(Compared to equivalent products in the ø16 market)

The use of an innovative lubricating mechanism has significantly improved the service life and operating stability.
Magnet rodless cylinder with high precision guide boasting high precision and high rigidity (ø10/ø16/ø25).

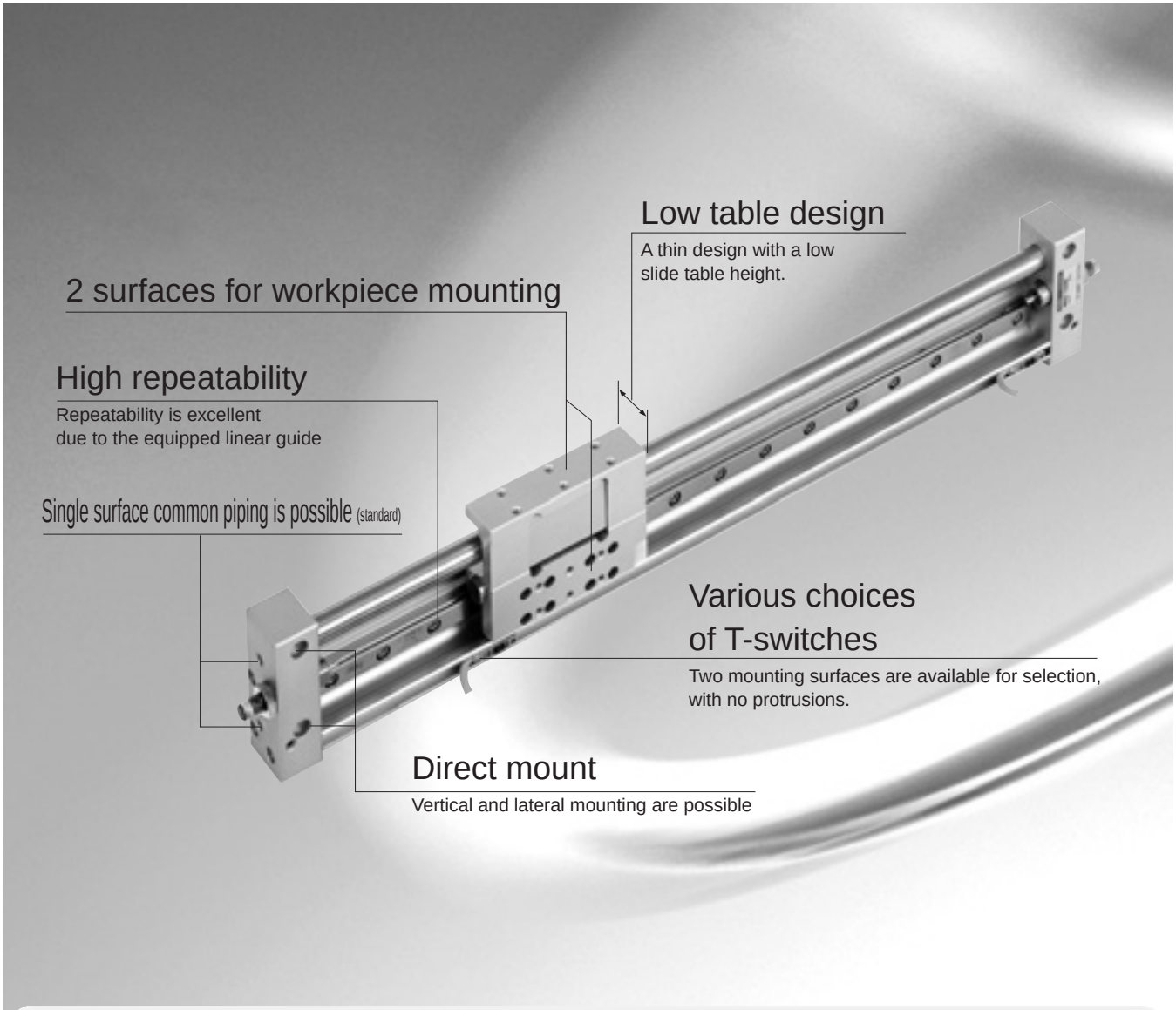

Durability is doubled

(in-house comparison)

Lubricating mechanism: lube keeping structure

A fiber assemblage (lube keeping structure) soaked with grease is mounted on the sliding portions of the piston and slider.
This enables stable supply of lubrication over a long period of time to suppress the progression of wear.
A significant improvement of service life (by more than 2-fold compared to our previous models) and stabilization of operation have been realized.

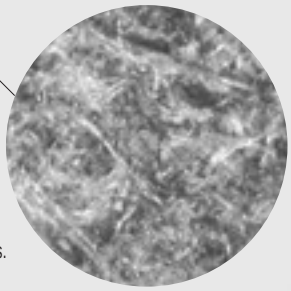

Lubrication supplying/absorbing function

Due to the effects of the capillary phenomenon, the soaked grease can be evenly applied to the sliding surface in a stable manner while absorbing any excess grease.

Dust wiper function

As well as dust, the powder from packing wear, etc., is captured within the fiber assemblage to reduce dirt from accumulating on the sliding portions.

Series variation

Magnet rodless cylinder high precision guide MRG2 Series

●: Standard, ◎: Option, ▒: Not available

Variation	Model No.	Bore size (mm)	Standard stroke (mm)									Min. stroke (mm)	Max. stroke (mm)	Option			Switch	Page
			50	100	150	200	300	400	500	600	700			A (With both-sided full stroke, adjustable brackets)	A1 (With R side full stroke, adjustable bracket)	A2 (With L side full stroke, adjustable bracket)		
Double acting	MRG2 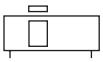	ø10	●	●	●	●	●					50	300	◎	◎	◎	◎	1766
		ø16	●	●	●	●	●	●	●				500					
		ø25	●	●	●	●	●	●	●	●	●		700					

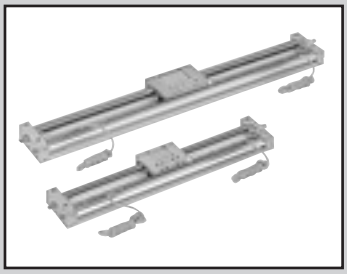

Magnet rodless cylinder with high precision guide

MRG2 Series

● Bore size: ø10, ø16, ø25

JIS symbol

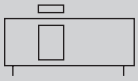

RoHS CAD

Specifications

Item		MRG2		
Bore size	mm	ø10	ø16	ø25
Actuation		Double acting		
Working fluid		Compressed air		
Max. working pressure	MPa	0.7 (≈100 psi, 7 bar)		
Min. working pressure	MPa	0.3 (≈44 psi, 3 bar)	0.2 (≈29 psi, 2 bar)	
Proof pressure	MPa	1.05 (≈150 psi, 10.5 bar)		
Ambient temperature	°C	5 (41°F) to 60 (140°F)		
Port size		M5		Rc1/8
Stroke tolerance	mm	+1.5 0		
Working piston speed	mm/s	50 to 1000		
Cushion		Shock absorber		
Lubrication		Not required (use turbine oil ISO VG32 if necessary for lubrication)		
Magnet holding force	N	63	166	350
Allowable absorbed energy	J	2.1	5.3	8.7

*1: Due to resistance of the shock absorber, it will take time to reach the stroke end. Take this into consideration upon use.
*2: Products other than standard stroke are made-to-order products.

Stroke

Bore size (mm)	Standard stroke (mm)	Max. stroke (mm)	Min. stroke (mm)	Min. stroke with switch (mm)
ø10	50, 100, 150, 200, 300	300	50	50 (with 2 pcs.) *2
ø16	50, 100, 150, 200, 300, 400, 500	500		
ø25	50, 100, 150, 200, 300, 400, 500, 600, 700	700		

*1: Products other than standard stroke are made-to-order products.
*2: The min. stroke for T1H, T2YH and T3YH with two switches is 70.

Switch specifications

● 1-color/2-color LED

Item	2-wire proximity				3-wire proximity				2-wire reed			
	T1H/T1V	T2H/ T2V	T2YH/ T2YV	T2WH/ T2WV	T3H/ T3V	T3PH/ T3PV	T3YH/ T3YV	T3WH/ T3WV	TOH/TOV		T5H/T5V	
Applications	For programmable controller, relay, compact solenoid valve	Dedicated for programmable controller			For programmable controller, relay				For programmable controller, relay		For programmable controller, relay IC circuit (without indicator lamp), serial connection	
Output method	-				NPN output	PNP output	NPN output	NPN output	-			
Pwr. supp. V.	-				10 to 28 VDC				-			
Load voltage	85 to 265 VAC	10 to 30 VDC		24 VDC ±10%	30 VDC or less				12/24 VDC	110 VAC	5/12/24 VDC	110 VAC
Load current	5 to 100 mA	5 to 20 mA (*3)			100 mA or less		50 mA or less		5 to 50 mA	7 to 20 mA	50 mA or less	20 mA or less
Indicator	LED (Lit when ON)	LED (Lit when ON)	Red/green LED (Lit when ON)	Red/green LED (Lit when ON)	LED (Lit when ON)	Yellow LED (Lit when ON)	Red/green LED (Lit when ON)	Red/green LED (Lit when ON)	LED (Lit when ON)		No indicator lamp	
Leakage current	1 mA or less with 100 VAC, 2 mA or less with 200 VAC	1 mA or less			10 μA or less				0 mA			
Weight g	1 m:33 3 m:87 5 m:142	1 m:18 3 m:49 5 m:80	1 m:33 3 m:87 5 m:142	1 m:18 3 m:49 5 m:80	1 m:18 3 m:49 5 m:80		1 m:33 3 m:87 5 m:142	1 m:18 3 m:49 5 m:80	1 m:18 3 m:49 5 m:80			

*1 : Refer to Ending Page 1 for detailed switch specifications and dimensions.
*2 : Switches other than the above models, such as switches with connectors, are also available. Refer to Ending Page 1.
*3 : The max. load current is 20 mA at 25°C. The current is lower than 20 mA if the operating ambient temperature around the switch is higher than 25°C. (5 to 10 mA at 60°C)

Cylinder weight

Unit (g)

Type	No switch		Switch weight	Additional weight
	Product weight when stroke S = 0 mm	Additional weight per S = 100mm	per 1 grommet	per full stroke adjustable bracket
MRG2-10	610	180	18	75
MRG2-16	1170	280		110
MRG2-25	3270	490		200

Theoretical thrust table

(Unit: N)

Bore size (mm)	Operating direction	Working pressure MPa					
		0.2	0.3	0.4	0.5	0.6	0.7
ø10	Push/Pull	-	23.6	31.4	39.3	47.1	55.0
ø16	Push/Pull	40.2	60.3	80.4	1.01×10^2	1.21×10^2	1.41×10^2
ø25	Push/Pull	98.2	1.47×10^2	1.96×10^2	2.45×10^2	2.95×10^2	3.44×10^2

Specifications for rechargeable battery

(Catalog No. CC-1226A)

● Design compatible with rechargeable battery manufacturing process

MRG2 - ····· - P4*

SCP*3
CMK2
CMA2
SCM
SCG
SCA2
SCS2
CKV2
CAV2/COVP/N2
SSD2
SSG
SSD
CAT
MDC2
MVC
SMG
MSD/MSDG
FC*
STK
SRL3
SRG3
SRM3
SRT3
MRL2
MRG2
SM-25
ShkAbs
FJ
FK
Spd Contr
Ending

How to order

No switch (built-in magnet for switch)

MRG2 – 10 – 100 ——— A

With switch (built-in magnet for switch)

MRG2 – 10 – 100 – T2H – D – A

Ⓐ Bore size

Ⓑ Stroke

Ⓒ Switch model No.
* indicates the lead wire length.
*3

Ⓓ Switch quantity

Ⓔ Option
*4

Code	Description
Ⓐ Bore size (mm)	
10	ø10
16	ø16
25	ø25

Ⓑ Stroke (mm)

	Bore size ø (mm)	10	16	25
50	50	●	●	●
100	100	●	●	●
150	150	●	●	●
200	200	●	●	●
300	300	●	●	●
400	400		●	●
500	500		●	●
600	600			●
700	700			●

Ⓒ Switch model No.

Axial lead wire	Radial lead wire	Contact	Voltage AC	Voltage DC	Indicator	Lead wire
T0H*	**T0V***	Reed	●	●	1-color LED	2-wire
T5H*	**T5V***		●	●	No indicator lamp	
T1H*	**T1V***	Proximity	●		1-color LED	
T2H*	**T2V***			●		
T3H*	**T3V***			●		3-wire
T3PH*	**T3PV***			●	1-color LED	3-wire
T2WH*	**T2WV***			●	2-color LED	2-wire
T2YH*	**T2YV***			●		
T3WH*	**T3WV***			●		3-wire
T3YH*	**T3YV***			●		

*** Lead wire length**

Blank	1 m (standard)
3	3 m (option)
5	5 m (option)

Ⓓ Switch quantity

R	1 on R side (*1)
L	1 on L side (*1)
D	2
T	3
4	4 (when there are more than 4 switches, indicate switch quantity.)

Ⓔ Option

A	With both-sided full stroke adjustable brackets
A1	With R side full stroke adjustable bracket (*2)
A2	With L side full stroke adjustable bracket (*2)

⚠ Precautions for model No. selection

*1 : Refer to the switch mounting position dimensions (page 1771) for the R side and L side.
*2 : Refer to page 1772 for the R side and L side stroke adjustment bracket positions.
*3 : T-switches other than switch model No. are also available. (Made to order) Refer to Ending Page 1 for details.
*4 : The full stroke adjustable brackets cannot be retrofitted.

How to order switch

SW – T0H*

Switch model No.
(Item Ⓒ above)

How to order discrete shock absorber

MRG2 – 10 – C

Bore size
(Item Ⓐ above)

[Example of model No.]

MRG2-10-100-T2H-D-A

Model: Rodless cylinder high precision guide

Ⓐ Bore size : ø10 mm
Ⓑ Stroke : 100 mm
Ⓒ Switch model No. : Proximity switch T2H
Ⓓ Switch quantity : 2 pcs. included
Ⓔ Option : With both sided full stroke adjustable brackets

Internal structure and parts list

● MRG2 (High precision guide)

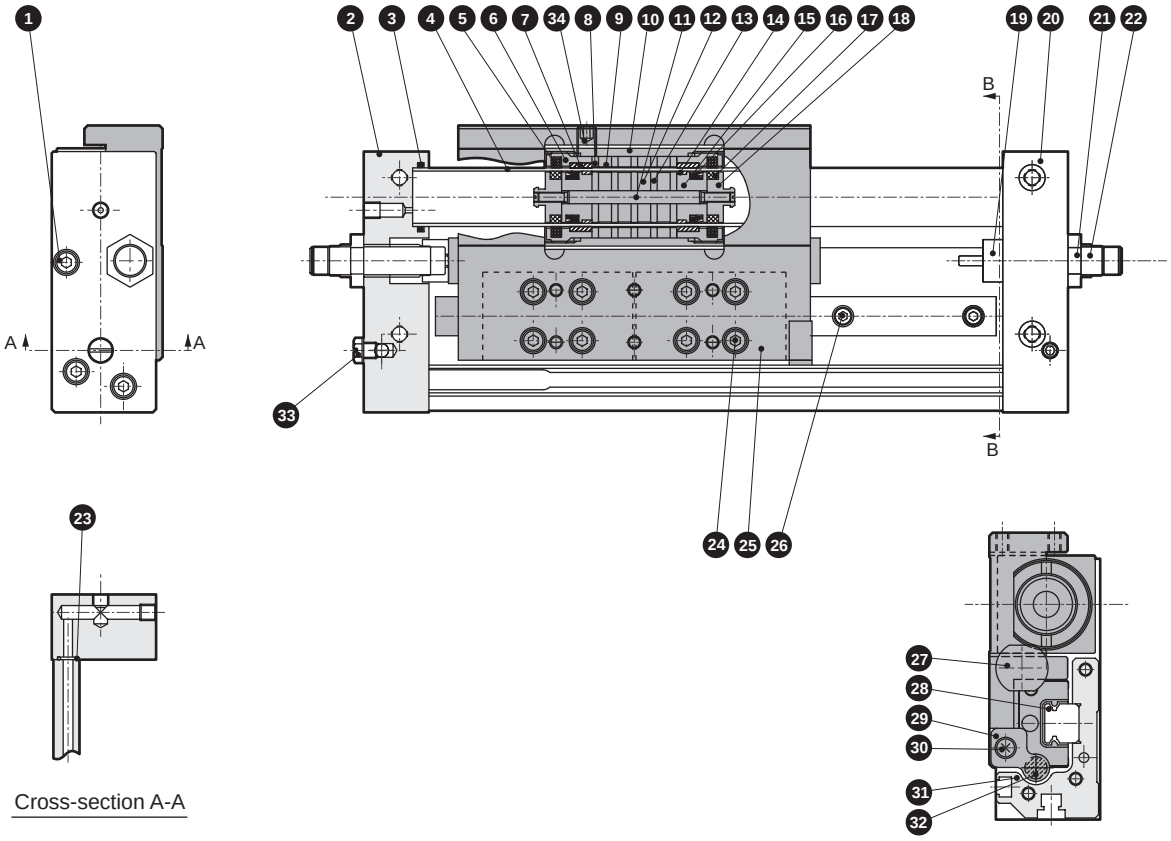

Cross-section A-A

Cross section B-B

Cannot be disassembled

MRG2 (High precision guide)

No.	Part name	Material	Remarks	No.	Part name	Material	Remarks
1	Hexagon socket head cap screw	Stainless steel		18	Piston (2)	Aluminum alloy	Chromate
2	End plate (L)	Aluminum alloy	Alumite	19	Stopper cap	Stainless steel	
3	O-ring	Nitrile rubber		20	End plate (R)	Aluminum alloy	Alumite
4	Cylinder tube	Stainless steel		21	Hexagon nut	Steel	Galvanizing
5	Lube keeping structure (for slider)	Special rubber		22	Shock absorber		
6	Slider cover	Aluminum alloy	Chromate	23	O-ring	Nitrile rubber	
7	Slider wear ring	Polyacetal resin		24	Hexagon socket head cap screw	Stainless steel	
8	Slider yoke	Steel	Galvanizing	25	Table	Aluminum alloy	Alumite
9	Magnet	Special alloy		26	Hexagon socket head cap screw	Stainless steel	
10	Slider	Aluminum alloy	Chromate	27	Rod bearer	Stainless steel	
11	Piston shaft	Stainless steel		28	Linear guide		
12	Magnet	Special alloy		29	Magnet holder	Polyacetal resin	
13	Piston yoke	Steel	Galvanizing	30	Cross-recessed pan head machine screw	Stainless steel	
14	Piston wear ring	Polyacetal resin		31	Base	Aluminum alloy	Alumite
15	Piston (1)	Aluminum alloy	Chromate	32	Magnet	Special alloy	
16	Piston packing	Nitrile rubber		33	Plug	Copper alloy or steel	
17	Lube keeping structure (for piston)	Special rubber		34	Hexagon socket set screw	Stainless steel	ø25 only

Dimensions

● MRG2 (High precision guide)

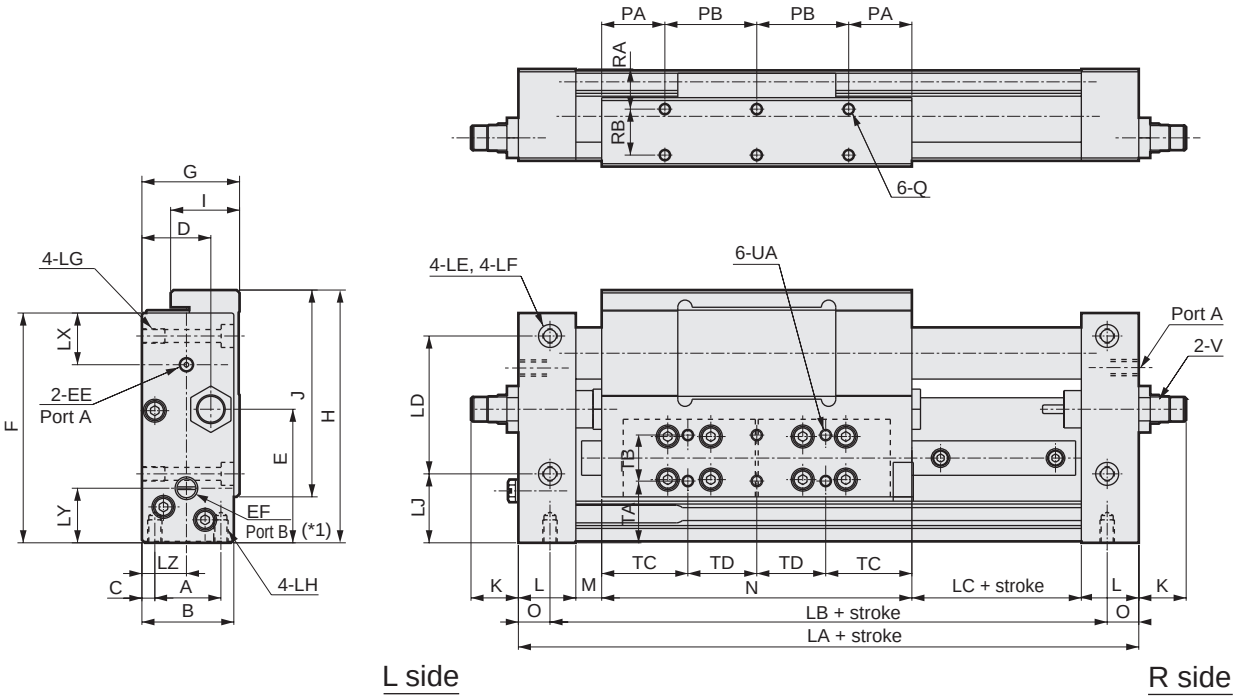

Code	Dimensions					Mounting dimensions							
Bore size (mm)	LA	B	G	F	H	O	LB	LD	LJ	LE	LF	LG	LH
ø10	138	26	28	70	74	11	116	40	22	ø4.5	8 spot face depth 4.4	M5 depth 8	M4 depth 8
ø16	166	32	34	80	88	11	144	48	24	ø4.5	8 spot face depth 4.4	M5 depth 8	M5 depth 8
ø25	214	44	46	100	114	15	184	62	32	ø5.5	9.5 spot face depth 5.4	M6 depth 12	M6 depth 10

Code	Mounting dimensions											
Bore size (mm)	A	C	PA	PB	RA	RB	Q	TA	TB	TC	TD	UA
ø10	18	4	16	24	12	12	M4 depth 6	19.5	13	24	16	M4 depth 6
ø16	23	4.5	22	32	14	16	M4 depth 6	21.5	16	30	24	M4 depth 6
ø25	23	5.5	34	40	20	20	M6 depth 8	23	22	38	36	M6 depth 8

Code	General dimensions														
Bore size (mm)	D	LX	EE	LY	EF	LZ	E	I	J	K	L	M	N	LC	V
ø10	19	18	M5 depth 4	17	M5 depth 4	11.5	38.5	20	58	14	20	9	80	9	MRG2-10-C
ø16	24	18	M5 depth 4	19	M5 depth 4	15	46.5	24	72	16.5	20	9	108	9	MRG2-16-C
ø25	32.5	23	Rc1/8	21.5	Rc1/8	23	55	32	98	19	25	8	148	8	MRG2-25-C

*1: When using single surface common piping, use by removing the plug of port B and attaching this plug to port A on the R side.

Switch mounting position dimensions

● MRG2- (switch: T0H/v, T5H/v, T2H/v, T3H/v, T2WH/v, T3WH/v)

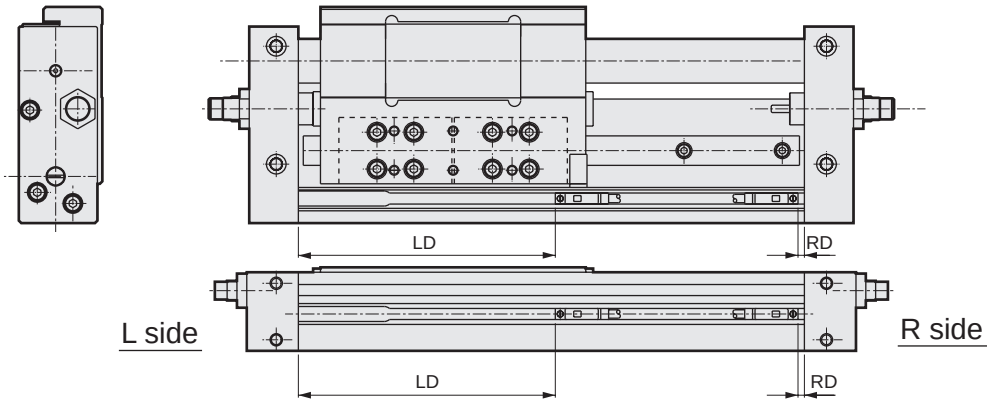

	Code	T0 H/v,T5 H/v		T2 H/v,T3 H/v		T2W H/v,T3W H/v	
	Bore size (mm)	RD	LD	RD	LD	RD	LD
MRG2	ø10	1.5	75.5	2.5	76.5	4.5	78.5
	ø16	1.5	103.5	2.5	104.5	4.5	106.5
	ø25	0.5	142.5	1.5	143.5	3.5	145.5
MRG2-*-A	ø10	26.5	100.5	27.5	101.5	29.5	103.5
	ø16	26.5	128.5	27.5	129.5	29.5	131.5
	ø25	50.5	192.5	51.5	193.5	53.5	195.5
MRG2-*-A1	ø10	51.5	75.5	52.5	76.5	54.5	78.5
	ø16	51.5	103.5	52.5	104.5	54.5	106.5
	ø25	100.5	142.5	101.5	143.5	103.5	145.5
MRG2-*-A2	ø10	1.5	125.5	2.5	126.5	4.5	128.5
	ø16	1.5	153.5	2.5	154.5	4.5	156.5
	ø25	0.5	242.5	1.5	243.5	3.5	245.5

● MRG2- (switch: T1H/v, T2YH/v, T3YH/v)

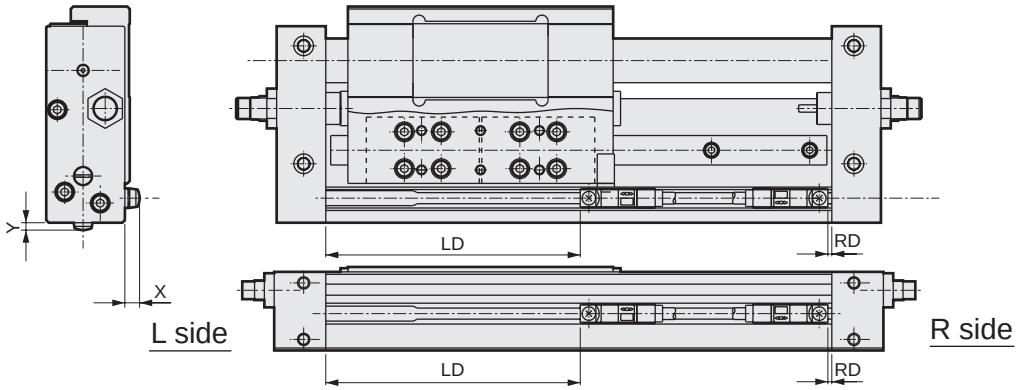

	Code	T2Y H/v, T3Y H/v			
	Bore size (mm)	RD	LD	X	Y
MRG2	ø10	1.5	75.5	6(11.5)	3(8.5)
	ø16	1.5	103.5	6(11.5)	3(8.5)
	ø25	0.5	142.5	6(11.5)	3(8.5)
MRG2-*-A	ø10	26.5	100.5	6(11.5)	3(8.5)
	ø16	26.5	128.5	6(11.5)	3(8.5)
	ø25	50.5	192.5	6(11.5)	3(8.5)
MRG2-*-A1	ø10	51.5	75.5	6(11.5)	3(8.5)
	ø16	51.5	103.5	6(11.5)	3(8.5)
	ø25	100.5	142.5	6(11.5)	3(8.5)
MRG2-*-A2	ø10	1.5	125.5	6(11.5)	3(8.5)
	ø16	1.5	153.5	6(11.5)	3(8.5)
	ø25	0.5	242.5	6(11.5)	3(8.5)

*1: Values in ( ) are for T1H/v.

SCP*3
CMK2
CMA2
SCM
SCG
SCA2
SCS2
CKV2
CAV2/COVP/N2
SSD2
SSG
SSD
CAT
MDC2
MVC
SMG
MSD/MSDG
FC*
STK
SRL3
SRG3
SRM3
SRT3
MRL2
MRG2
SM-25
ShkAbs
FJ
FK
Spd Contr
Ending

Dimensions

● MRG2-*-A (high precision guide, with both sided full stroke adjustable brackets)

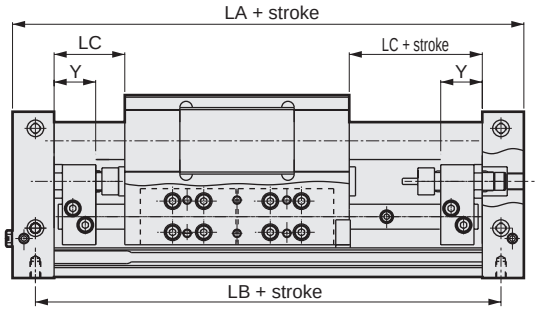

● MRG2-*-A1 (high precision guide, with R side full stroke adjustable brackets)

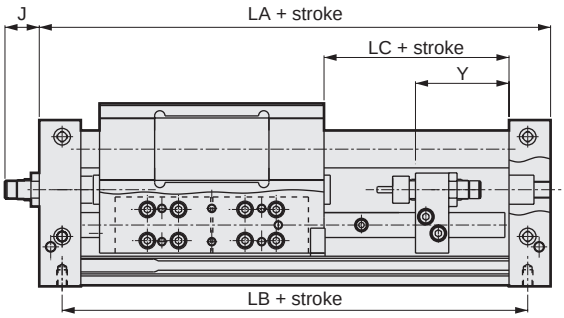

● MRG2-*-A2 (high precision guide, with L side full stroke adjustable brackets)

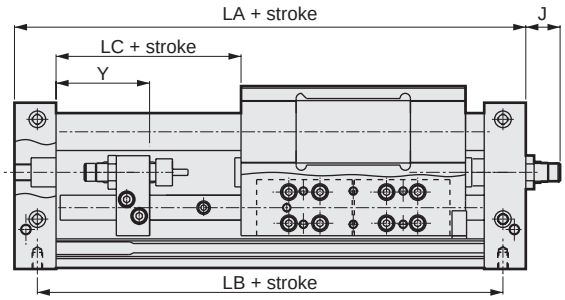

Code	LA			LB			LC			Y			J		
Bore size (mm)	A	A1	A2	A	A1	A2	A	A1	A2	A	A1	A2	A	A1	A2
ø10	188			166			34	59		20	45		-	14	
ø16	216			194			34	59		20	45		-	16.5	
ø25	314			284			58	108		41	91		-	19	

MRG2 Series selection guide

● As the selection conditions are different from those of general air cylinders, confirm whether the model is adequate or not according to selection guide.

STEP-1

When newly selecting a model → STEP-2

When verifying applicability with use conditions and size (bore) already specified → STEP-5

STEP-2

● Confirming working conditions

1. Working pressure (P) ☐ (MPa)
2. Applied load (W) ☐ (N) (applied load = workpiece load + jig load)
3. Mounting orientation Horizontal / vertical (Refer to Fig. 1 below)
4. Stroke (L) ☐ (m)
5. Travel time (t) ☐ (S)
6. Average speed (Va) ☐ (m/s)

Formula for cylinder average speed Va

$$Va = \frac{L}{t} \text{ (m/s)}$$

[Mounting orientation]

Operating direction Horizontal, vertical - up, vertical - down

Mounting direction Lateral, vertical (refer to Fig. 1)

Fig. 1

Lateral

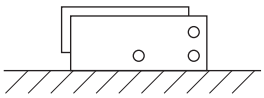

Vertical

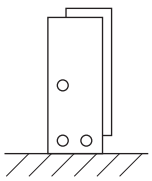

SCP*3
CMK2
CMA2
SCM
SCG
SCA2
SCS2
CKV2
CAV2/COVP/N2
SSD2
SSG
SSD
CAT
MDC2
MVC
SMG
MSD/MSDG
FC*
STK
SRL3
SRG3
SRM3
SRT3
MRL2
MRG2
SM-25
ShkAbs
FJ
FK
Spd Contr
Ending

STEP-3

● Calculation of required thrust

Calculate the required thrust (F_N) of the cylinder.

1. For horizontal operation
   F_N=Wx0.2* = ☐ (N)
2. For vertical operation
   F_N=W = ☐ (N)

* This is the frictional resistance value of the guide, etc., when a load is placed on the slider. Consider separately when there is further external resistance.

STEP-4

● Selection of approximate size of cylinder

$$\text{Required thrust of cylinder } F_N \leq \text{theoretical thrust} \times \frac{\mu}{100} \times \frac{\alpha}{100}$$

μ: Thrust efficiency (%) (refer to Fig. 2.)
α: Load factor (%) (refer to Fig. 2.)

Select a cylinder size which satisfies this condition.

Table 1. Theoretical thrust value

(N)

Bore size (mm)	Working pressure MPa					
	0.2	0.3	0.4	0.5	0.6	0.7
ø10	-	24	31	39	47	55
ø16	40	60	80	101	121	141
ø25	98	147	196	245	295	344

Fig. 2 Thrust efficiency μ

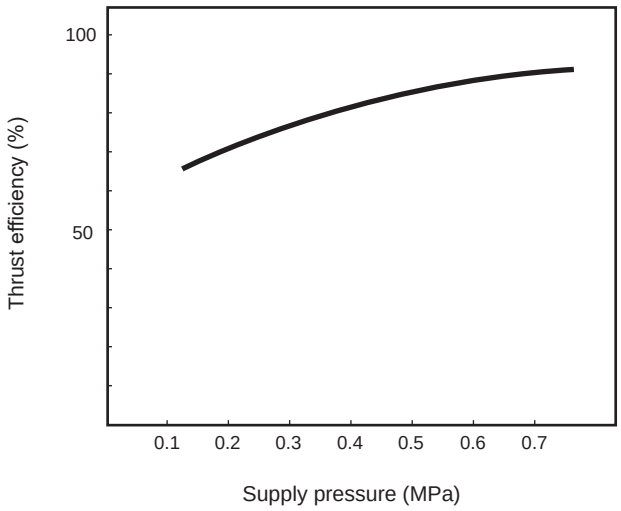

Load factor α: For general use, the value within the range in Table 2 is desirable.

Table 2. Load factor guidelines

Working pressure MPa	α (%)
0.2 to 0.3	α ≤ 40
0.3 to 0.6	α ≤ 50
0.6 to 0.7	α ≤ 60

STEP-5

● Calculate the vertical load and value for each moment

Calculate the vertical loads (W1, W2) and the moments (M1, M2, M3) depending on the load cylinder mounting status.

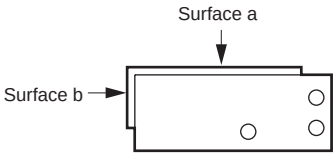

	Mounting on surface a	Mounting on surface b	Calculation results
Vertical load W1 W2	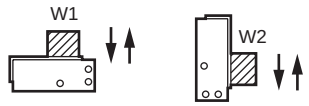	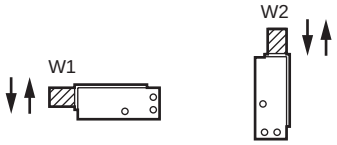	W1= ☐ W2= ☐
Bending moment M1=F1xℓ1	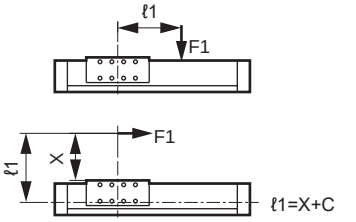 X is the distance from the surface of the slider to the working point of the force	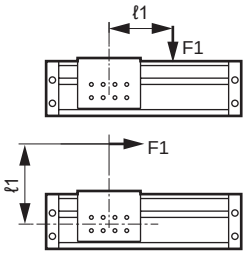	M1= ☐
Radial moment M2=F2xℓ2	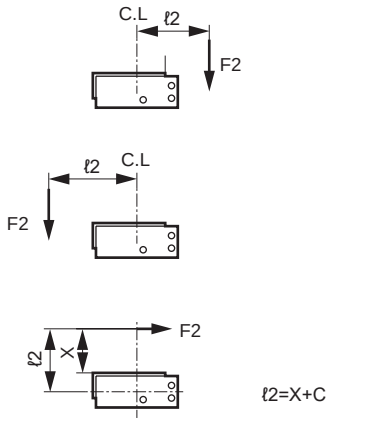 C.L indicates the center point between the set screws on surface a	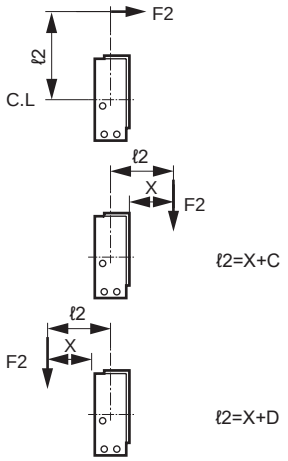	M2= ☐
Torsion moment M3=F3xℓ3	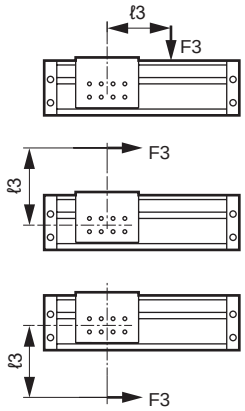	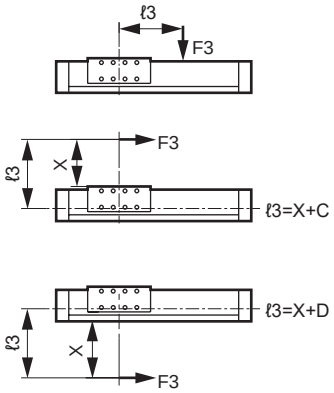	M3= ☐

Table 3. Values of each parameter

(m)

Bore size (mm)	C	D
ø10	0.016	0.012
ø16	0.020	0.014
ø25	0.026	0.020

STEP-6

● Confirmation of the vertical load and the composite value for each moment

Divide each load with the max. allowable values listed in Table 4 and confirm that the total value thereof is 1.0 or less.

$$\frac{W1\ (\text{or } W2)}{W1\ (\text{or } W2)\ \max} + \frac{M1}{M1\max} + \frac{M2}{M2\max} + \frac{M3}{M3\max} \leq 1.0$$

When the total value is greater than 1.0

1. Review the load → STEP-2
2. Use a cylinder with wider bore size, etc., for revision. → Increase cylinder bore size STEP-5

Table 4. Max. allowable values of vertical load and moments

Bore size (mm)	W1max(N)	W2max(N)	M1max (N·m)	M2max (N·m)	M3max (N·m)
ø10	44	35	2.2	1.2	2.2
ø16	103	91	7.4	3.2	7.4
ø25	176	176	18.3	7.3	18.3

STEP-7

● Confirmation of kinetic energy

Calculate the kinetic energy from load weight m (kg) and speed V (m/s) to confirm that the value is within the range of the specifications of the shock absorber. If the kinetic energy exceeds the specifications, increase the cylinder size or install an external shock absorber.

(1) Formula for kinetic energy calculation

$$E_1 = \frac{1}{2} \times m \times V^2 = \square\ (J)$$

$$m = \frac{W}{9.8} = \square\ (kg)$$

$$V = \frac{L}{t} \times \left\{1 + 1.5 \times \frac{\alpha}{100}\right\} = \square\ (m/s)$$

$$\alpha = \frac{F_N}{\text{Cylinder theoretical thrust} \times \frac{\mu}{100}} \times 100 = \square\ (\%)$$

E_1 : Kinetic energy (J)
m : Load weight (kg)
V : Speed (m/s)
W : Applied load (N)
L : Cylinder stroke (m)
t : Operating time (s)
α : Cylinder load factor (%)
F_N : Required thrust (N)
μ : Thrust efficiency (%)

(2) Shock absorber

The shock absorber used with MRG2 is shown in Table 5.

Table 5. Shock absorber specifications

Model	MRG2-10	MRG2-16	MRG2-25
Shock absorber model No.	MRG2-10-C (NCK-00-0.3 used)	MRG2-16-C (NCK-00-0.7 used)	MRG2-25-C (NCK-00-1.2 used)
Max. absorbed energy (J) *1	2.1	5.3	8.7
Stroke (mm) *1	5	7	8.5
Absorbed energy per hour (kJ/hour)	6.3	12.6	21.6
Max. operating frequency (cycle/min)	35	30	30

*1) As a stopper cap is used to stop the piston before the stroke end, the energy and stroke are both smaller than standard products.

● Confirmation of allowable colliding energy of shock absorber

Calculate colliding object equivalent weight Me and colliding energy E with the formula listed in the table below and confirm that Me and E are less than or equal to the allowable values listed in Fig. 4 and Table 5. Also confirm that the repetition frequency is less than or equal to the allowable value according to Table 5.

● Code

E	: Colliding energy	☐	(J)
Me	: Colliding object equivalent weight	☐	(kg)
m	: Load weight	☐	(kg)
F	: Cylinder thrust	☐	(N)
V	: Colliding speed	☐	(m/s)
St	: Shock absorber stroke	☐	(m)
g	: Gravity acceleration	9.8	(m/s^2)

	Horizontal movement	Vertical down	Vertical up
Applications	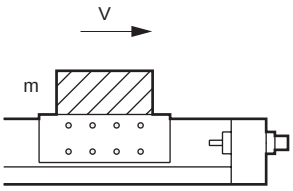	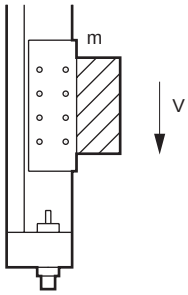	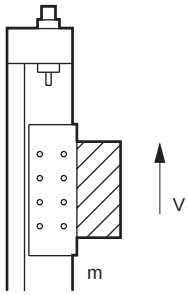
Colliding object equivalent weight Me (kg)	$Me=m+\frac{2F\cdot St}{V^2}$	$Me=m+\frac{2\cdot St\ (F+mg)}{V^2}$	$Me=m+\frac{2\cdot St\ (F-mg)}{V^2}$
Energy E (J)	$E=\frac{mV^2}{2}+F\cdot St$	$E=\frac{mV^2}{2}+(F+mg)\cdot St$	$E=\frac{mV^2}{2}+(F-mg)\cdot St$

Fig. 4

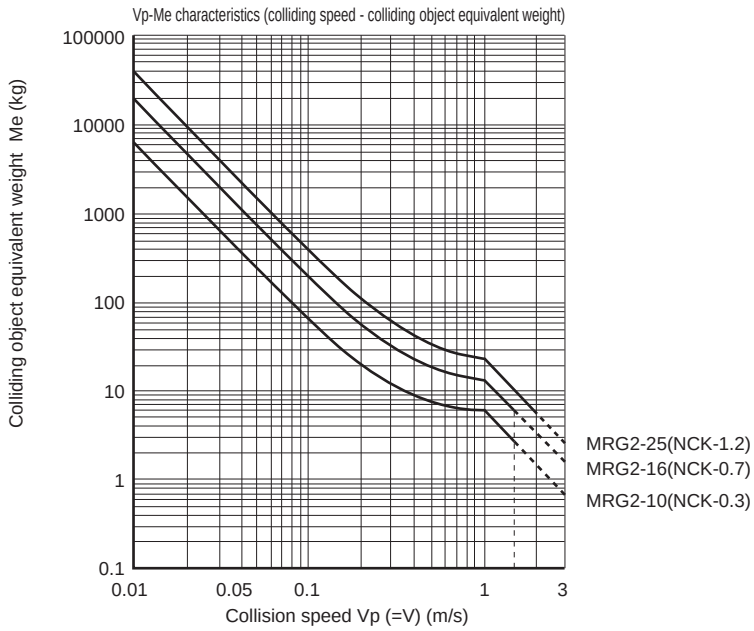

STEP-8

● Confirmation of inertia load

Inertia force functioning due to the load will operate at the end of the stroke.
Confirm whether this force is within the allowable range.

(1) Calculate inertia force Fi according to speed V and the inertia force coefficient shown in Fig. 5.
Fi=9.8xmxG(N)
m: Load weight (kg)
G: Inertia force coefficient

Fig. 5. Inertia force coefficient

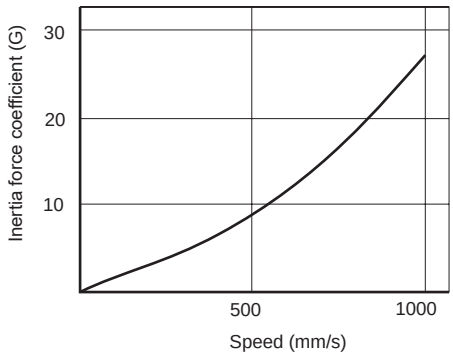

(2) Calculate the moment and load that is generated due to the inertia force.
(Example)

M1i=Fixℓ1

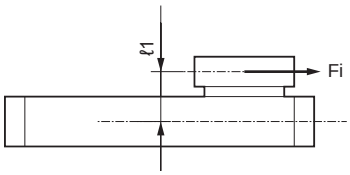

W1i=Fi

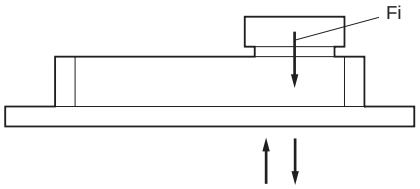

When vertically moving the entire cylinder

(3) Add the load and moment generated by static load and inertial force, divide each load with the allowable values listed in Table 4 and confirm that the total values thereof are 1.0 or less.

W1g=W1+W1i　　M1g=M1+M1i
W2g=W2+W2i　　M2g=M2+M2i
M3g=M3+M3i

$$\frac{W1g\ (\text{or } W2g)}{W1\ (\text{or } W2)\ \max} + \frac{M1g}{M1\ \max} + \frac{M2g}{M2\ \max} + \frac{M3g}{M3\ \max} \leq 1.0$$

MRG2 Table deflection (reference value)

● Bending moment direction
M1=FxL

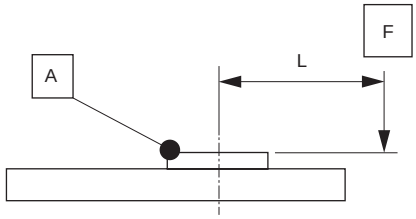

● Radial moment direction
M2=FxL

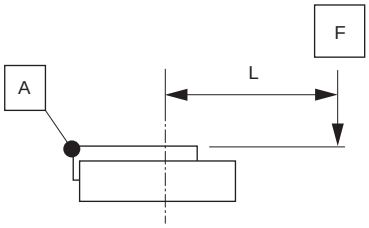

● Torsion moment direction
M3=FxL

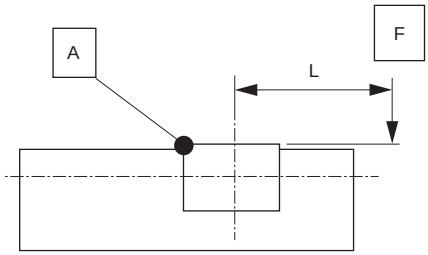

Displacement of A = Table deflection

● MRG2-10

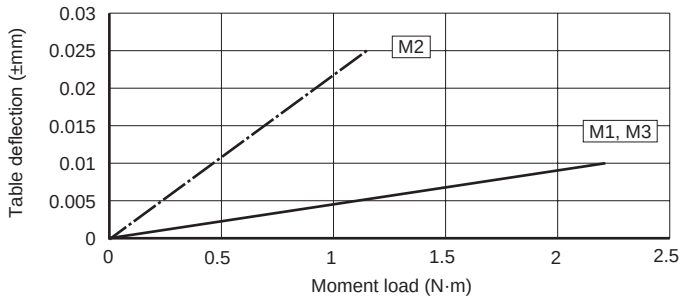

● MRG2-16

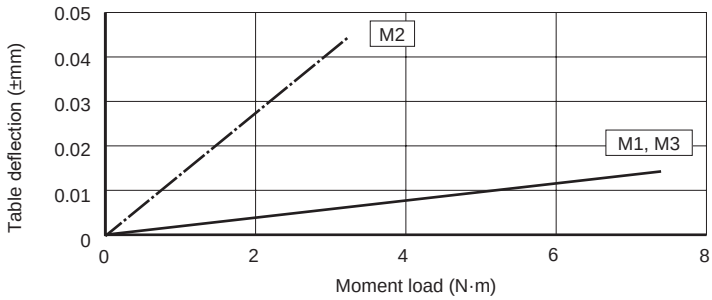

● MRG2-25

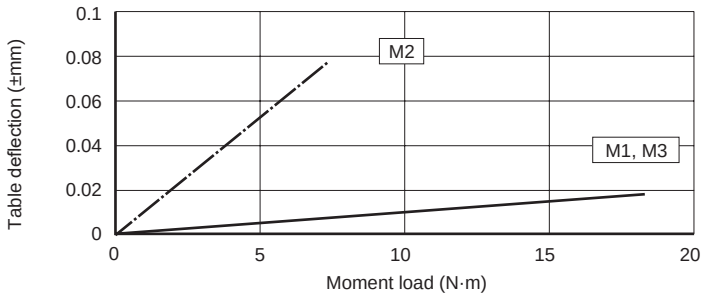

Note: The table deflection indicates a value for reference at the stroke end.

Pneumatic components

Safety Precautions

Be sure to read this section before use.
Refer to Intro Page 73 for general information of the cylinder, and to Intro Page 80 for general information of the cylinder switch.

Product-specific cautions: Rodless cylinder MRG2 Series

Design/selection

WARNING

■ With the cylinder, there is the risk of the table popping out in cases when a change of force occurs due to disruption of the sliding portions of the machine.
This could cause physical harm, such as pinched hands or feet, or mechanical damage. Adjust the machines so that they operate smoothly and design so that physical harm will be avoided.

■ If requiring deceleration circuit and shock absorber
If the driven object moves at high speeds or is very heavy, it may be difficult to absorb impact with the standardly provided shock absorber alone. Take measures to ease impact by installing a deceleration circuit before the shock absorber or by using an external shock absorber. The machine's rigidity must also be considered.

■ The piston may become derailed if the unit is used in an environment of pressure greater than the max. working pressure or in cases when a load greater than the allowable value is applied.

Mounting, installation and adjustment

CAUTION

■ Be careful of the gap between the end plate and the slider.
Be careful when operating the cylinder as getting a hand or finger caught in the unit may lead to injury.

■ Do not apply a load to the cylinder that is greater than or equal to the allowable load listed in the materials for selection.

■ Do not use with the table fixed.
Use the cylinder with the end plate fixed. Avoid use with the table fixed.

■ Mount so that the table functions with the min. working pressure value of all processes.
When the flatness of the surface for cylinder installation is poor, the min. working pressure will rise due to guide unit torsion and cause early wear of the bearing section. For this reason, install the unit so that the table functions with the min. working pressure value or less of all processes. Although mounting mating surfaces should be highly flat, adjust with shims when this cannot be confirmed.

■ Be careful to avoid scratching or denting the outer peripheral surface of the cylinder tube.
This will cause damage to the lubricator and slider wear ring and may lead to defective operation.

■ The cylinder switch may malfunction if there is a magnetic substance such as a metal plate installed adjacently. Be sure that more clearance than the dimensions listed below is provided.

Magnetic substance such as a steel plate

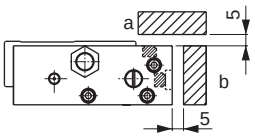

Avoid simultaneous a and b.

■ When using cylinders adjacent with each other or when using other magnetic sensors nearby, in order to prevent malfunctioning due to the leaked magnetic field of the cylinder embedded magnet, separate the cylinder or magnetic sensors by at least the values listed below.

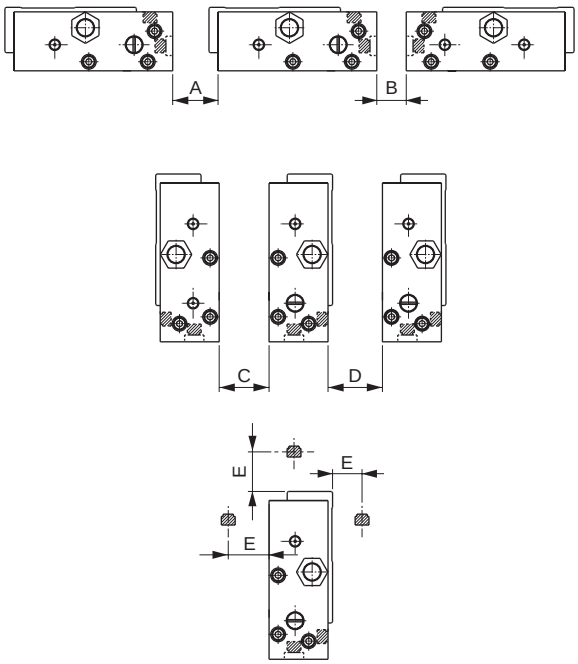

Unit: mm

Bore size	A	B	C	D	E
ø10	20	10	10	10	20
ø16	20	10	10	10	20
ø25	50	20	20	20	50

When this distance is dimension E or less, malfunctions can be prevented by placing a magnetic substance (steel plate with thickness of 2 mm or above) between the unit and the table.

■ Piping port position and operating direction

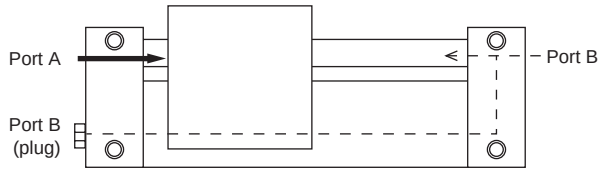

The slide table will move to the right side of the figure when port A is pressurized.
The slide table will move to the left side of the figure when port B is pressurized.
Port B (plug) is sealed with a plug at shipment. Common piping is possible by removing the plug and sealing port B on the right side.

■ CKD's shock absorber is a repair part.
Replace it when the energy absorption performance has degraded or the operation is not smooth.

■ Stroke adjusting procedure
Stroke (-) direction ⟷ Stroke (+) direction

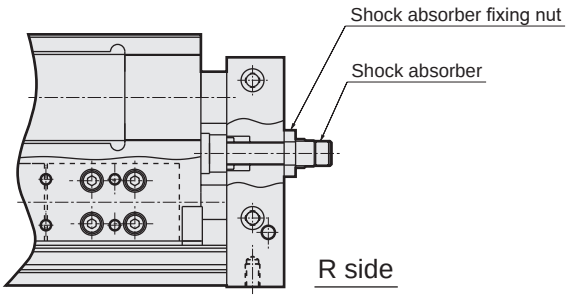

Adjustable stroke (one side)

Bore size (mm)	Stroke (-) direction	Stroke (+) direction
ø10	5	5
ø16	5	5
ø25	6	4

1. Loosen the shock absorber fixing nut, make adjustments by turning the shock absorber until the slide table is at the intended position, and tighten the shock absorber fixing nut to fix the unit in place. The tightening torque is to be in accordance with the table on the right.

CAUTION
Although it is possible to adjust the stroke of the above table with adjustment of the shock absorber, take care as switch detection will become impossible on the R side only at the stroke end when adjusting the (+) stroke direction.

■ Adjustment method for full stroke adjustable bracket
Stroke (-) direction ⟷ Stroke (+) direction

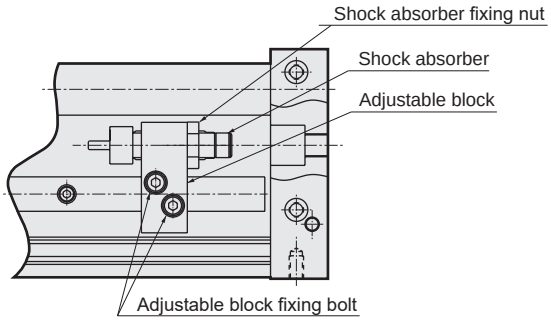

Full stroke adjustment volume (adjustment volume per full stroke adjustable bracket)

Bore size (mm)	A		A1		A2	
	Stroke (-) direction	Stroke (+) direction	Stroke (-) direction	Stroke (+) direction	Stroke (-) direction	Stroke (+) direction
ø10	Stroke	0	Stroke	24	Stroke	24
ø16	Stroke	0	Stroke	24	Stroke	24
ø25	Stroke	15	Stroke	65	Stroke	65

1. Movement of adjustment block
Loosen the adjustment block fixing bolt, and after moving the unit to a random position, fasten the adjustment block fixing bolt to fix the unit in place. The tightening torque is to be in accordance with the table below.

2. Fine adjustment of the shock absorber
Loosen the shock absorber fixing nut and make adjustments by turning the shock absorber until the slide table is at the intended position. After adjustment, tighten the shock absorber fixing nut to fix the shock absorber. The tightening torque is to be in accordance with the table below.

Tightening torque / Bore size (mm)	Shock absorber fixing nut (N·m)	Adjustable block fixing bolt (N·m)
ø10	1.2 to 2.0	2.2 to 3.0
ø16	3 to 4	2.2 to 3.0
ø25	5 to 6	4.6 to 6.3

Use/maintenance

⚠ CAUTION

■ The magnetic strength of the embedded magnet is powerful. Do not disassemble.

SM-25

Shuttle mover

ø25

Rodless

Overview

The air-driven 3D transport P&P system shuttle mover [SM-25] employs a rodless cylinder that combines air with magnetic force. 3D transport which was not possible in the past has been realized. Use of a sleeve and O-ring in the connecting portion of the cylinder tube eliminates leakage of air and also enables easy assembly. This configuration enables free layout.

Features

Free layout is possible

Unit combinations (lateral curve/vertical curve/straight) enable freely arranged 3D transport that fits workability and various conditions between processes.

O-ring used in unit connecting parts

A simple structure enables easy assembly and prevents leakage of air.

■ Applications

- Connections between each process
- Removal and supply of parts from processing machinery
- Transportation of parts in assembly lines

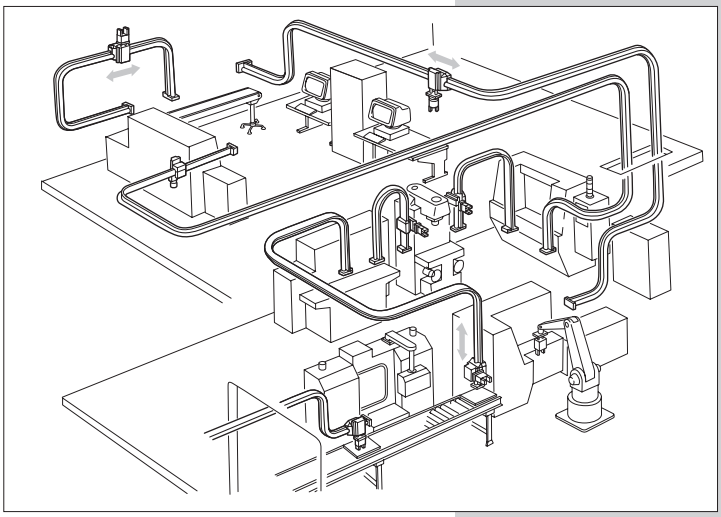

CONTENTS

● Standard/high load (SM-25)	1784
Technical data	1800
Q&A	1802
⚠Safety precautions	1804

Shuttle mover standard/high load

SM-25 Series

Air-driven three-dimensional P&P system that enables flexible layout

RoHS CAD

Specifications

Model No. / Item		Standard	High load
Working fluid		Compressed air	
Max. working pressure	MPa	0.6 (≈87 psi, 6 bar)	
Min. working pressure	MPa	0.3 (≈44 psi, 3 bar)	
Ambient temperature	°C	5 (41°F) to 40 (104°F)	
Bore size	mm	ø25	
Port size		Rc3/8	
Magnet holding force	N	120	240
Max. load capacity	kg	2 (total load weight to be mounted)	4 (total load weight to be mounted)
Max. transporting distance	m	20	
Stroke end adjustment length	mm	±10	
Cushion	Piston	Rubber cushion	
	Carrier	Shock absorber	
Lubrication		Not required (use turbine oil class 1 ISO VG32 if necessary for lubrication)	

Weight

Model	Weight (kg)	
	Standard	High load
Carrier	1	1.7
Rail end	2 x 2 pcs.	3.6 x 2 pcs.
Lateral curve unit 90° Lateral curve unit 45°	4 2.4	Same as left
Vertical (in) curve unit 90° Vertical (in) curve unit 45° Vertical (out) curve unit 90° Vertical (out) curve unit 45°	3 1.8 3 1.8	Same as left
Air supply unit (2 or 3 nozzles)	0.3 (end mount) x 2 pcs. 0.2 (carrier mount) x 2 pcs.	0.4 (end mount) x 2 pcs. 0.4 (carrier mount) x 2 pcs.
Air supply unit (4 nozzles)	1.6 (end mount) x 2 pcs. 0.3 (carrier mount) x 1 pcs.	Same as left
Joint	0.3	0.4
Straight unit	0.4 0.8 to 8 * Additional 0.4 per 100 mm of stroke	Same as left

How to order

SM-25- ST-H 100

A B

A Model No. Standard	A Model No. High load	Description
CA	CA-H	Carrier
RE *1	RE-H *1	Rail end
ST	ST-H	Straight unit *2
SC90	SC-H90	Lateral curve unit 90°
SC45	SC-H45	Lateral curve unit 45°
VC90-IN	VC-H90-IN	Vertical (in) curve unit 90°
VC45-IN	VC-H45-IN	Vertical (in) curve unit 45°
VC90-OUT	VC-H90-OUT	Vertical (out) curve unit 90°
VC45-OUT	VC-H45-OUT	Vertical (out) curve unit 45°
PP *3	PP-H *4	Air supply unit
PR *5	PR-H *5	Air supply unit
RJ	RJ-H	Fitting

B Stroke (mm) *2
100 to 2000 *6

*1: With 1 set of fittings (2 pcs.) and a shock absorber.
*2: It is necessary to provide instructions on the stroke only with the straight unit.
*3: For 2 nozzles.
1 set includes 2 sets for the rail end and 2 sets for the carrier.
*4: For 3 nozzles.
1 set includes 2 sets for the rail end and 2 sets for the carrier.
*5: For 4 nozzles.
1 set includes 2 sets for the rail end and 1 set for the carrier.
*6: The max. stroke is 2000 mm.
Standard products are available in 10 mm increments between 100 to 190 and 100 mm increments between 200 to 2000.
Available in 1 mm increments, as made to order.
*7: Each rail unit comes with 1 fitting.

The SKH series of shock absorbing valves is recommended for the valves. Refer to “Pneumatic Valves (No. CB-023SA)” for details on the valves.

Internal structure and parts list ø25

● Carrier (CA)

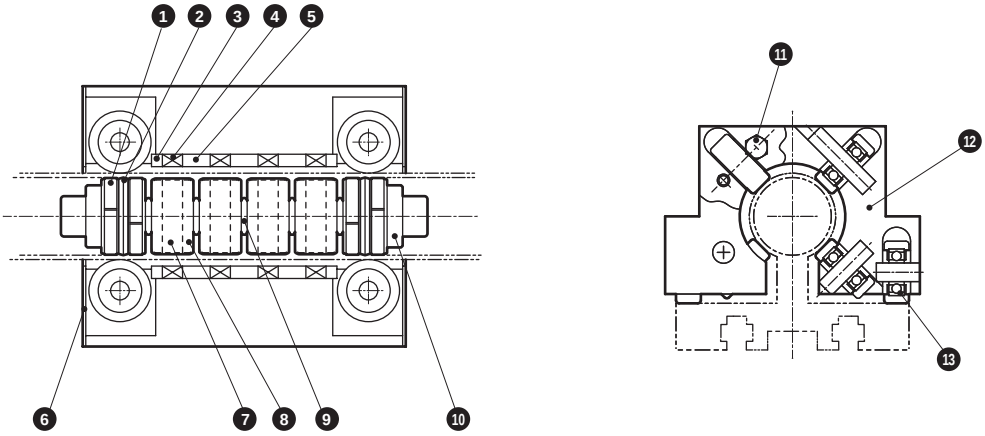

● Carrier/high load (CA-H)

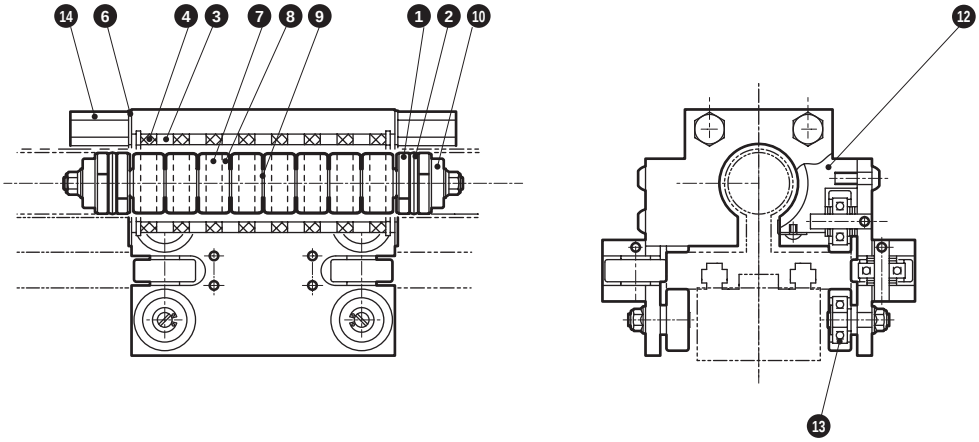

Parts list

No.	Part name	Material	Remarks	No.	Part name	Material	Remarks
1	Wear ring	Acetal resin		8	Interior/yoke	Steel	
2	Piston packing	Nitrile rubber		9	Flexible shaft	Nylon	
3	Exterior/outer yoke	Steel		10	Piston	Aluminum alloy	
4	Exterior/magnet	Rare-earth magnet		11	Stop pin	Steel	
5	Exterior/inner yoke	Steel		12	Housing	Aluminum alloy	
6	Side cover	Stainless steel		13	Roller	Polyurethane rubber	
7	Internal/magnet	Rare-earth magnet		14	Stopper bolt	Steel	

Repair parts list

Part name	Series	Set No.	Repair parts No.
Piston set	Standard	SM-25-CA-PS	1 2 7 8 9 10
	High load	SM-25H-CA-PS	
Carrier set	Standard	SM-25-CA-S	3 4 5 6 11 12 13
	High load	SM-25H-CA-S	3 4 6 12 13 14
Packing set (*1)	Standard	SM-25-CA-PK	1 2
	High load		

*1: 4 wear rings and 2-piston packings are included in the set.

SCP*3
CMK2
CMA2
SCM
SCG
SCA2
SCS2
CKV2
CAV2/COVP/N2
SSD2
SSG
SSD
CAT
MDC2
MVC
SMG
MSD/MSDG
FC*
STK
SRL3
SRG3
SRM3
SRT3
MRL2
MRG2
SM-25
ShkAbs
FJ
FK
Spd Contr
Ending

Internal structure and parts list

● Rail end (RE)

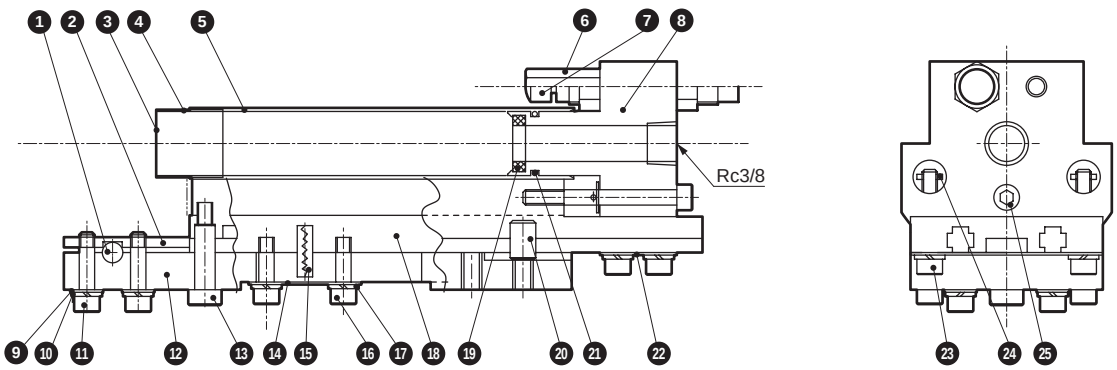

● Rail end/high load (RE-H)

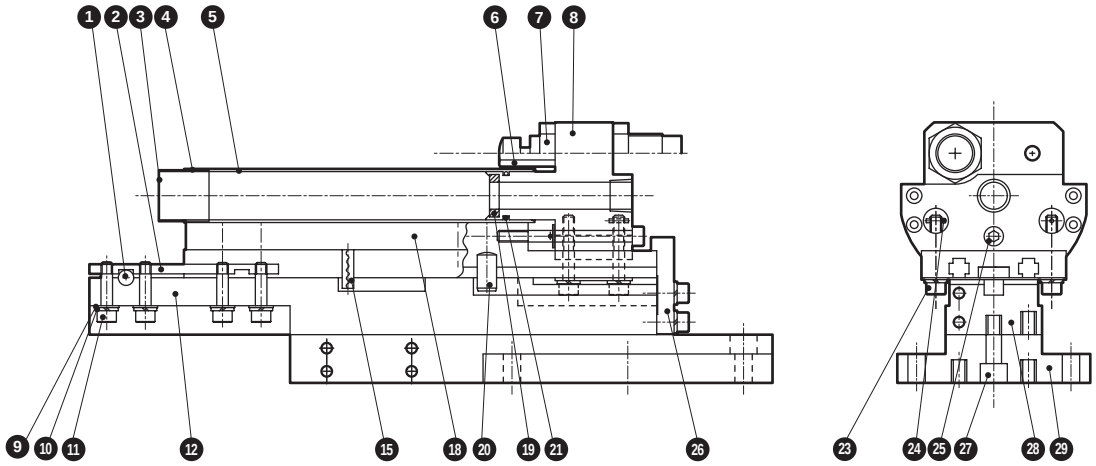

Parts list

No.	Part name	Material	Remarks	No.	Part name	Material	Remarks
1	Positioning pin	Stainless steel		16	Hexagon socket head cap screw	Steel	
2	Flat nut	Steel		17	Spring washer	Steel	
3	Fitting sleeve	Stainless steel		18	End rail	Aluminum alloy	
4	Tube packing	Nitrile rubber		19	Cushion rubber	Synthetic rubber	
5	End pipe	Stainless steel		20	Pin	Steel	
6	Stopper bolt	Steel		21	O-ring	Nitrile rubber	
7	Shock absorber (Note)			22	Stopper washer	Stainless steel	
8	End block	Aluminum alloy		23	Safety bolt	Steel	
9	Plain washer	Steel		24	Spring pin	Stainless steel	
10	Spring washer	Steel		25	Adjusting bolt	Steel	
11	Hexagon socket head cap screw	Steel		26	Holding bracket	Steel	
12	Fitting plate	Aluminum alloy		27	Hexagon socket head cap screw	Steel	
13	Shoulder bolt	Steel		28	Fitting plate	Aluminum alloy	
14	Fixing washer	Stainless steel		29	End bracket	Aluminum alloy	
15	Spring pin	Stainless steel					

Note: ❼ Shock absorber Standard NCK-00-2.6-C
High load NCK-00-7-C

Internal structure and parts list ø25

● Fitting (RJ)

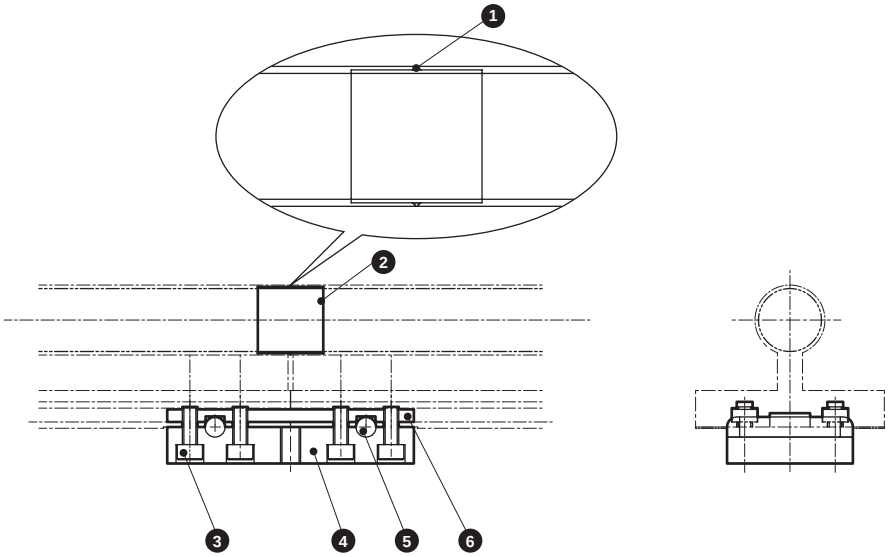

● Fitting/high load (RJ-H)

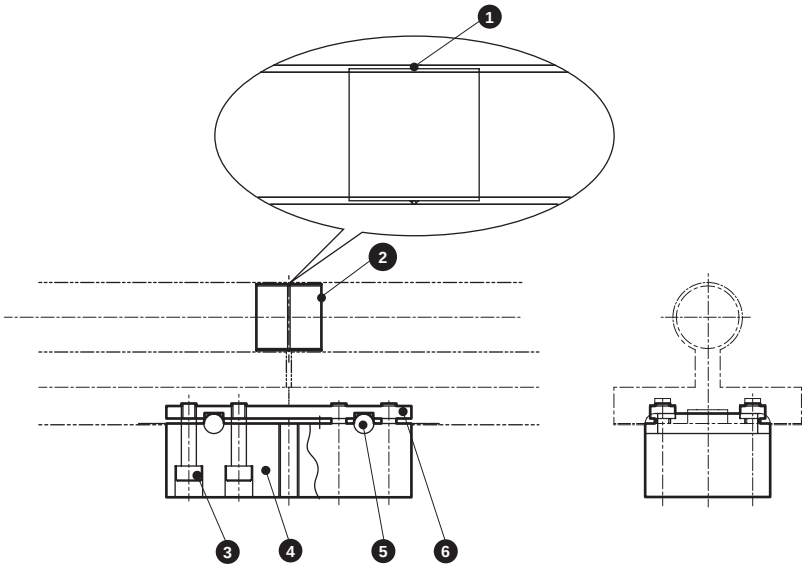

Parts list

No.	Part name	Material	Remarks	No.	Part name	Material	Remarks
1	Tube packing	Nitrile rubber		4	Fitting plate	Aluminum alloy	
2	Fitting sleeve	Stainless steel		5	Positioning pin	Stainless steel	
3	Hexagon socket head cap screw	Steel		6	Connecting nut	Steel	

Repair parts list

Part name	Set No.	Repair parts No.
Gasket set (Note)	SM-25-RJ-GS	❶
Grease	SM-25-GR	- 50g

Note: 10 pcs. are included in 1 set.

SCP*3
CMK2
CMA2
SCM
SCG
SCA2
SCS2
CKV2
CAV2/COVP/N2
SSD2
SSG
SSD
CAT
MDC2
MVC
SMG
MSD/MSDG
FC*
STK
SRL3
SRG3
SRM3
SRT3
MRL2
MRG2
SM-25
ShkAbs
FJ
FK
Spd Contr
Ending

Internal structure and parts list ø25

● Air supply unit (PP)

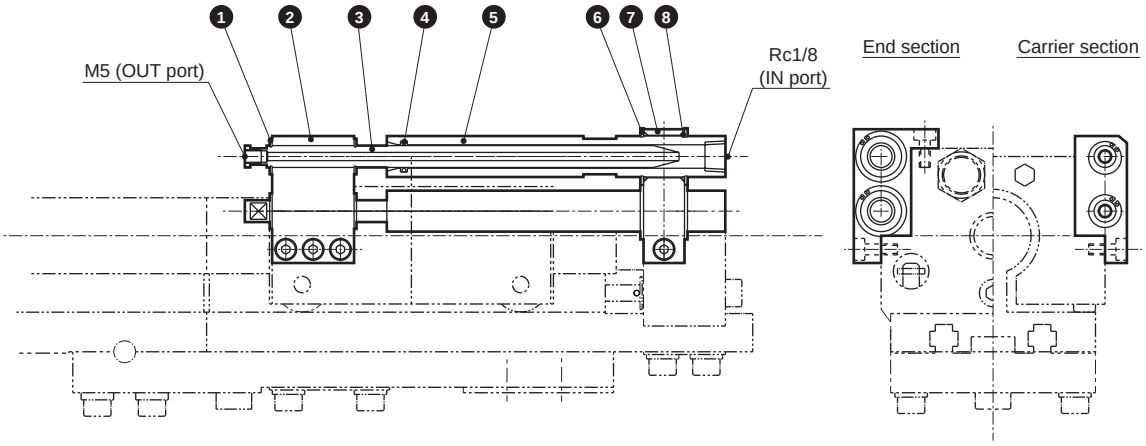

● Air supply unit/high load (PP-H)

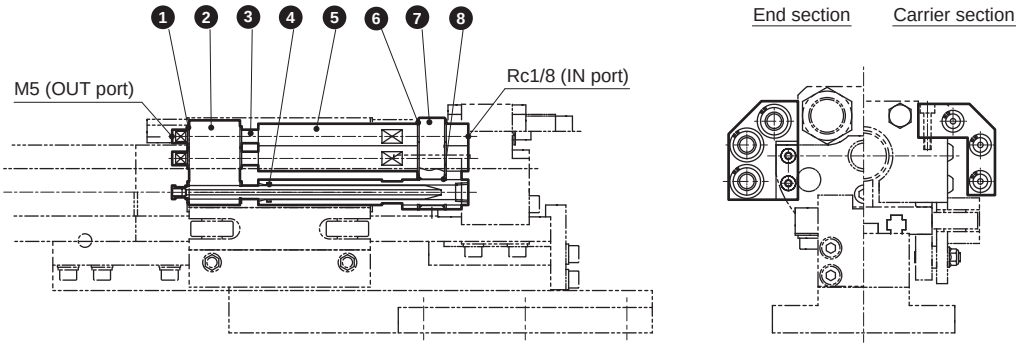

Parts list

No.	Part name	Material	Remarks	No.	Part name	Material	Remarks
1	C-snap ring	Steel		5	Fixing nozzle	Steel	
2	Nozzle holder	Aluminum alloy		6	C-snap ring	Steel	
3	Nozzle	Steel		7	Fixing holder	Steel	
4	O-ring	Nitrile rubber		8	O-ring	Nitrile rubber	

Internal structure and parts list ø25

● Air supply unit (PR)

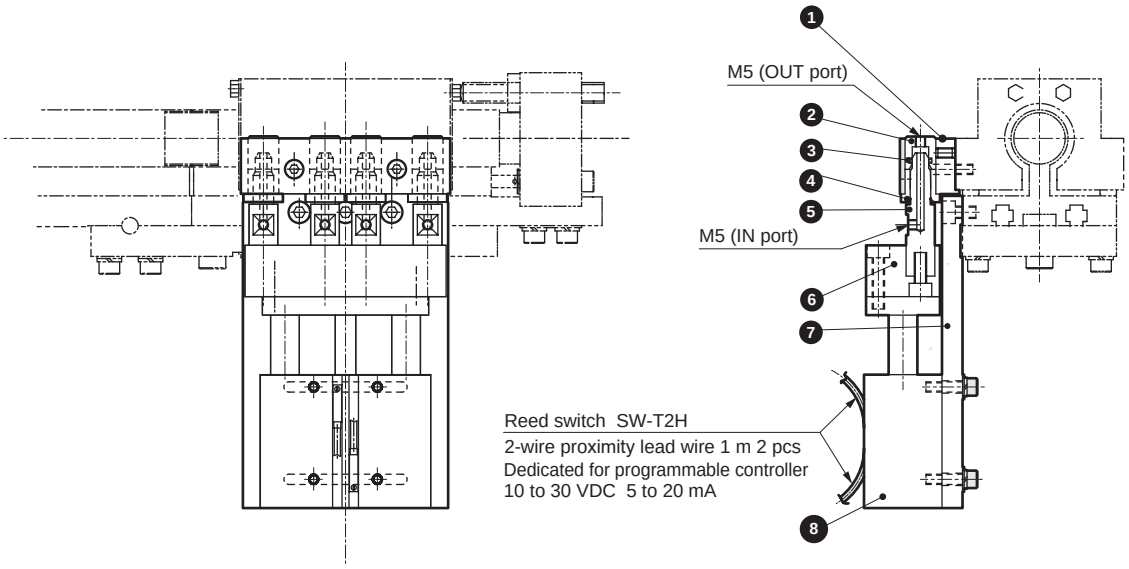

● Air supply unit/high load (PR-H)

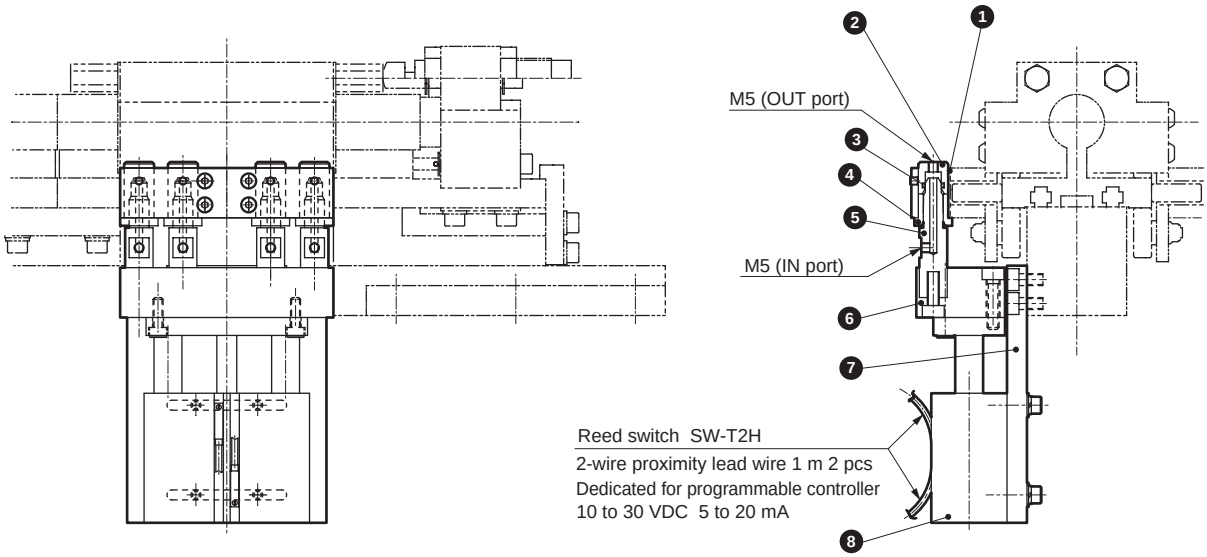

Parts list

No.	Part name	Material	Remarks	No.	Part name	Material	Remarks
1	Bush holder	Aluminum alloy		6	Pin holder	Aluminum alloy	
2	Bush	Copper alloy		7	Mounting plate	Aluminum alloy	
3	O-ring	Nitrile rubber		8	Air cylinder	STS-M-20-25	
4	Positioning bush	Steel		9	Reed switch	SW-T2H	
5	Pin	Steel					

SCP*3
CMK2
CMA2
SCM
SCG
SCA2
SCS2
CKV2
CAV2/COVP/N2
SSD2
SSG
SSD
CAT
MDC2
MVC
SMG
MSD/MSDG
FC*
STK
SRL3
SRG3
SRM3
SRT3
MRL2
MRG2
SM-25
ShkAbs
FJ
FK
Spd Contr
Ending

Dimensions

● Carrier (CA)

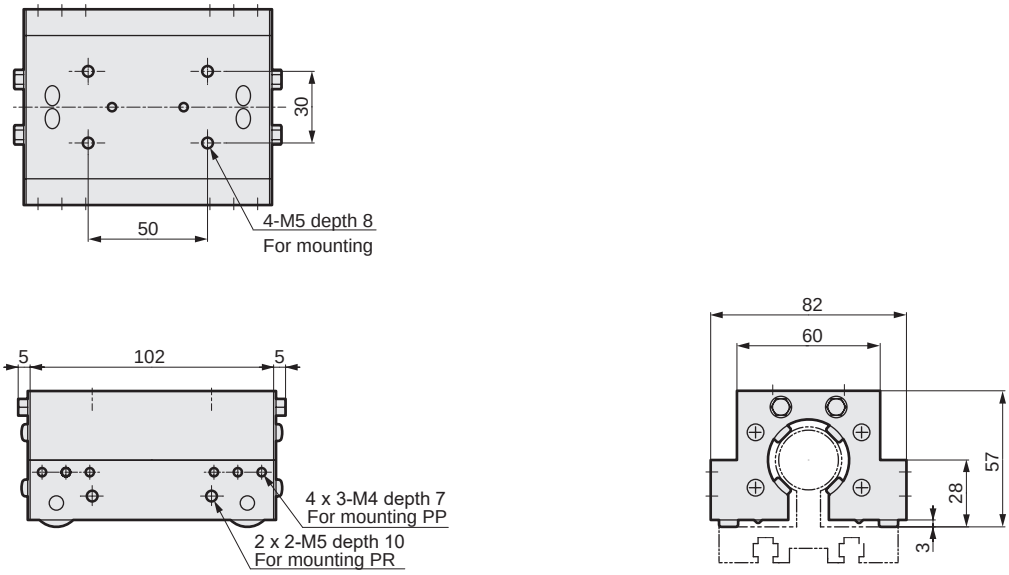

● Carrier/high load (CA-H)

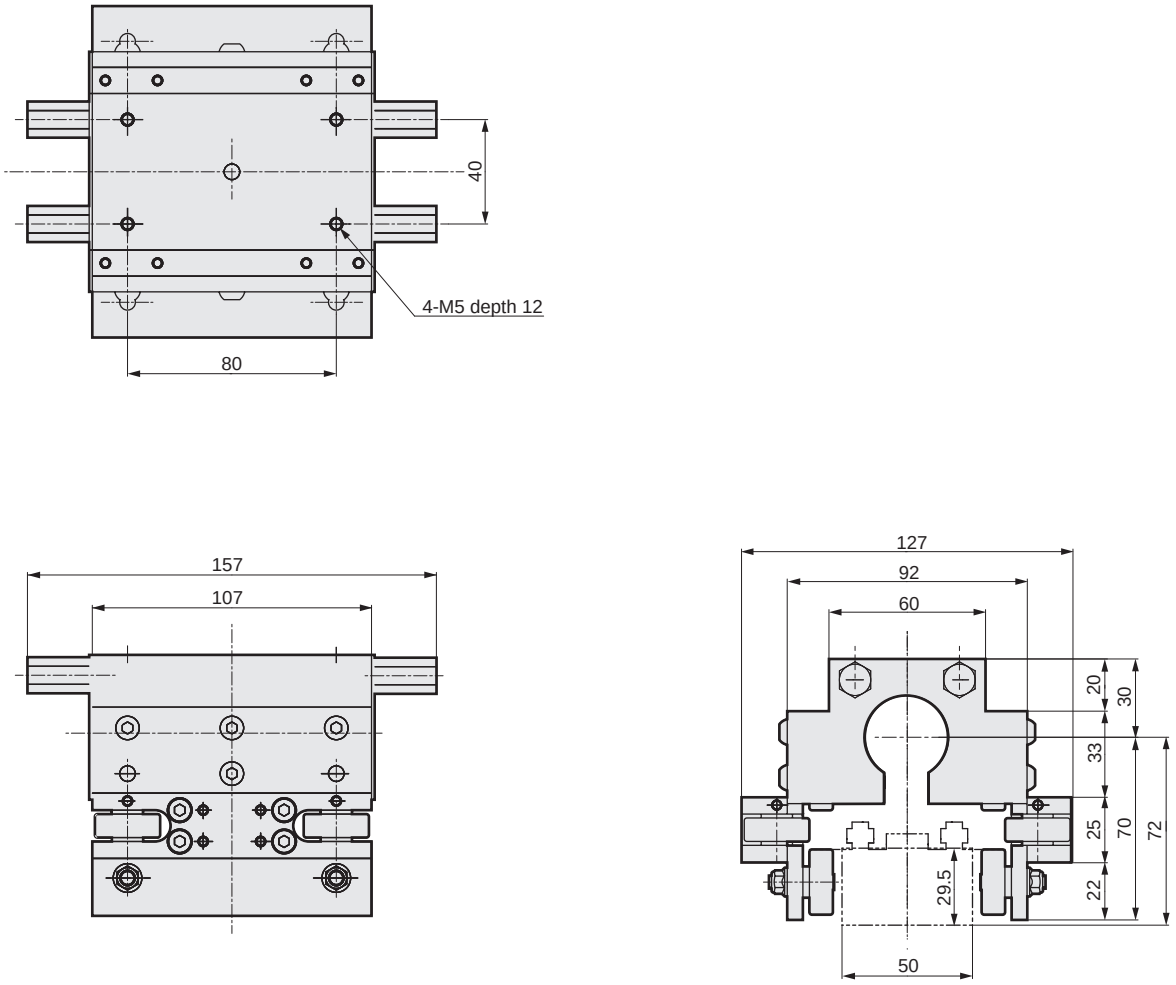

Dimensions

● Rail end (RE)

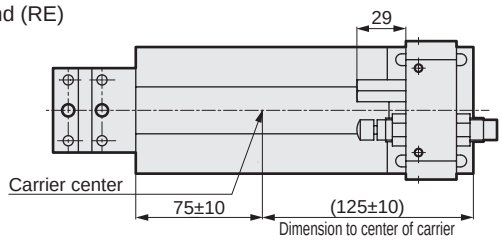

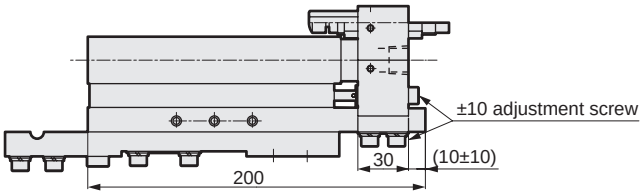

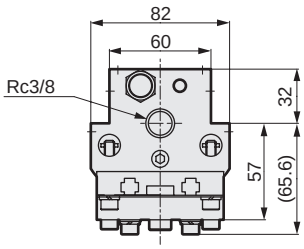

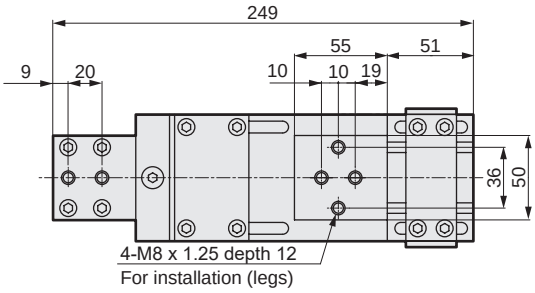

● Rail end/high load (RE-H)

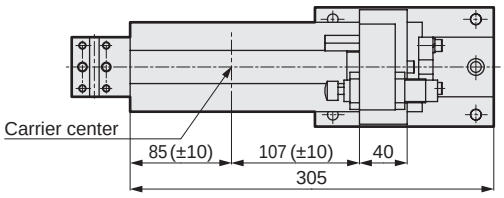

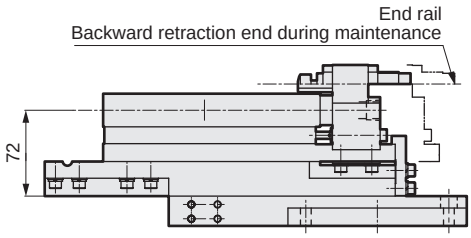

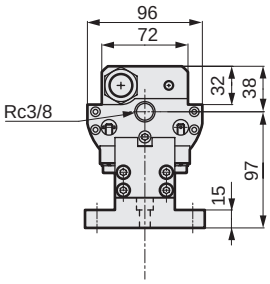

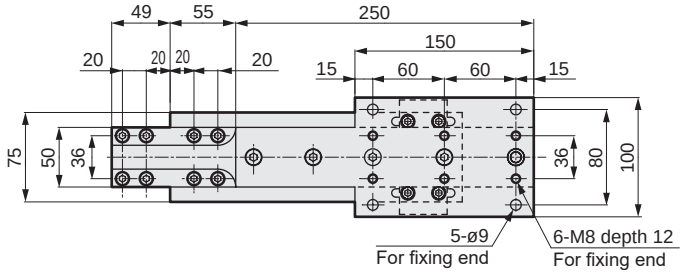

SCP*3
CMK2
CMA2
SCM
SCG
SCA2
SCS2
CKV2
CAV2/COVP/N2
SSD2
SSG
SSD
CAT
MDC2
MVC
SMG
MSD/MSDG
FC*
STK
SRL3
SRG3
SRM3
SRT3
MRL2
MRG2
SM-25
ShkAbs
FJ
FK
Spd Contr
Ending

Dimensions

● Air supply unit (PP)

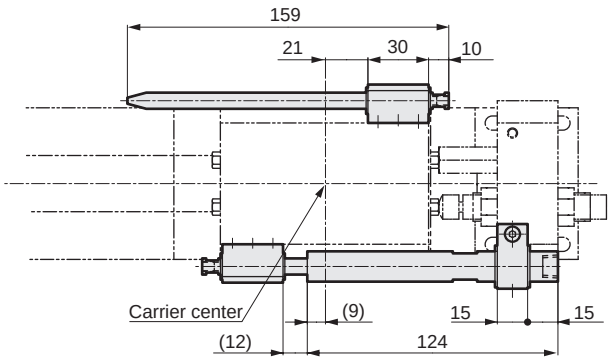

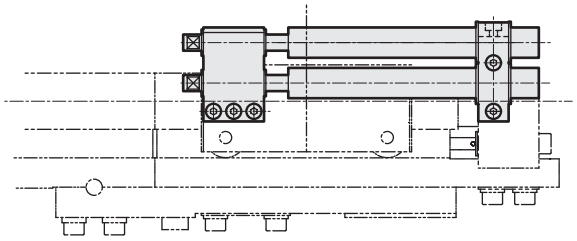

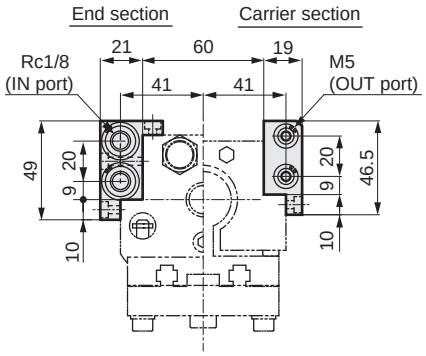

● Air supply unit/high load (PP-H)

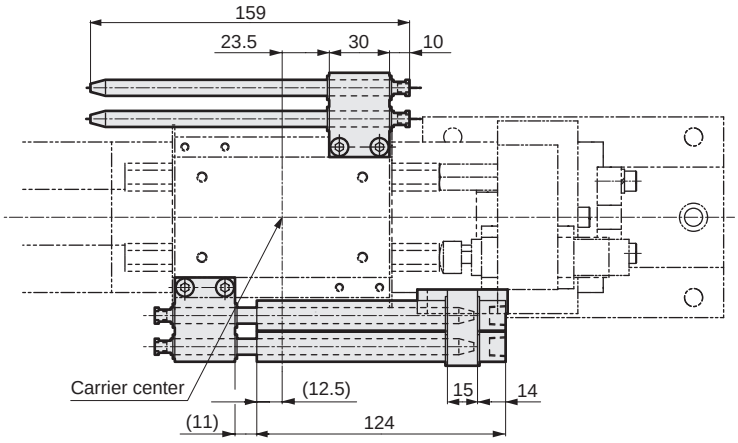

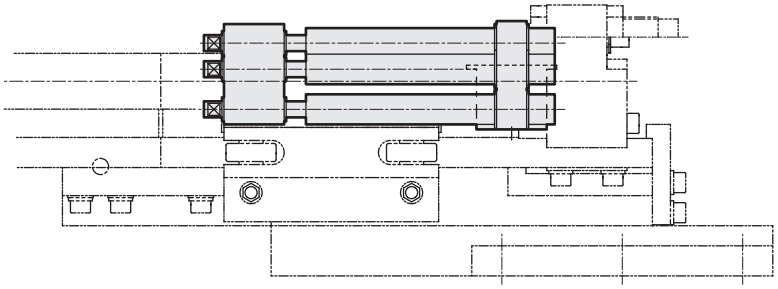

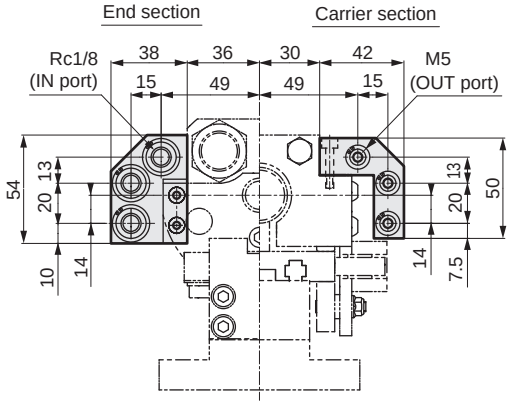

Dimensions

● Air supply unit (PR)

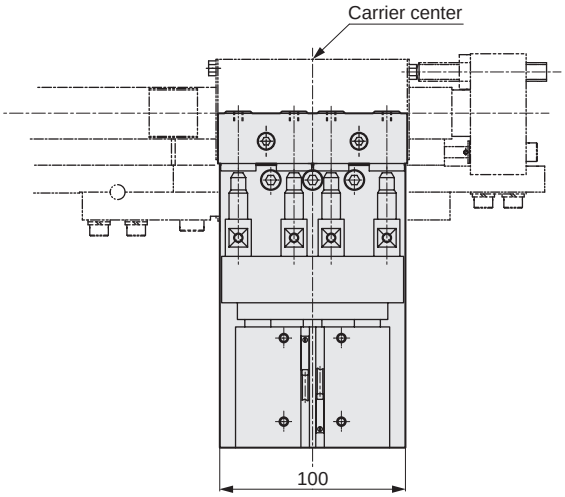

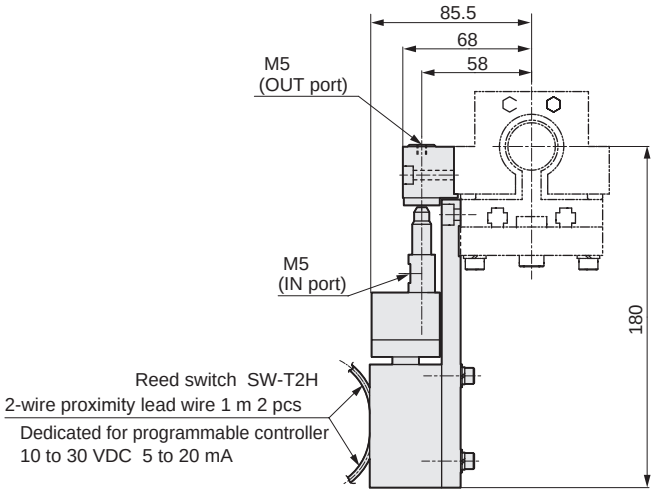

● Air supply unit/high load (PR-H)

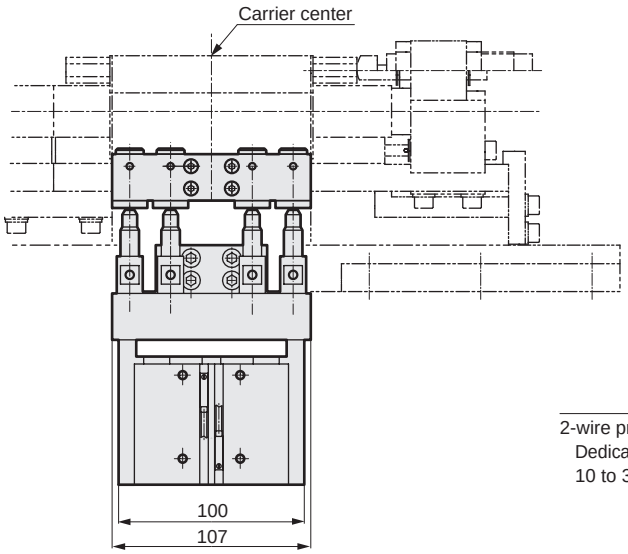

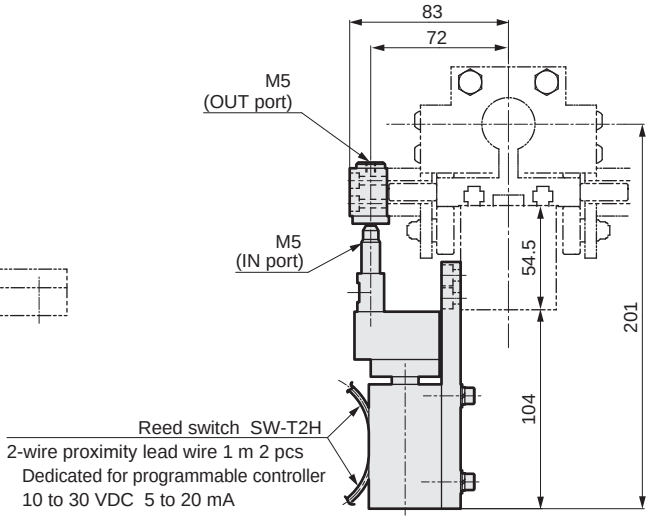

SCP*3
CMK2
CMA2
SCM
SCG
SCA2
SCS2
CKV2
CAV2/COVP/N2
SSD2
SSG
SSD
CAT
MDC2
MVC
SMG
MSD/MSDG
FC*
STK
SRL3
SRG3
SRM3
SRT3
MRL2
MRG2
SM-25
ShkAbs
FJ
FK
Spd Contr
Ending

Dimensions

● Fitting (RJ)

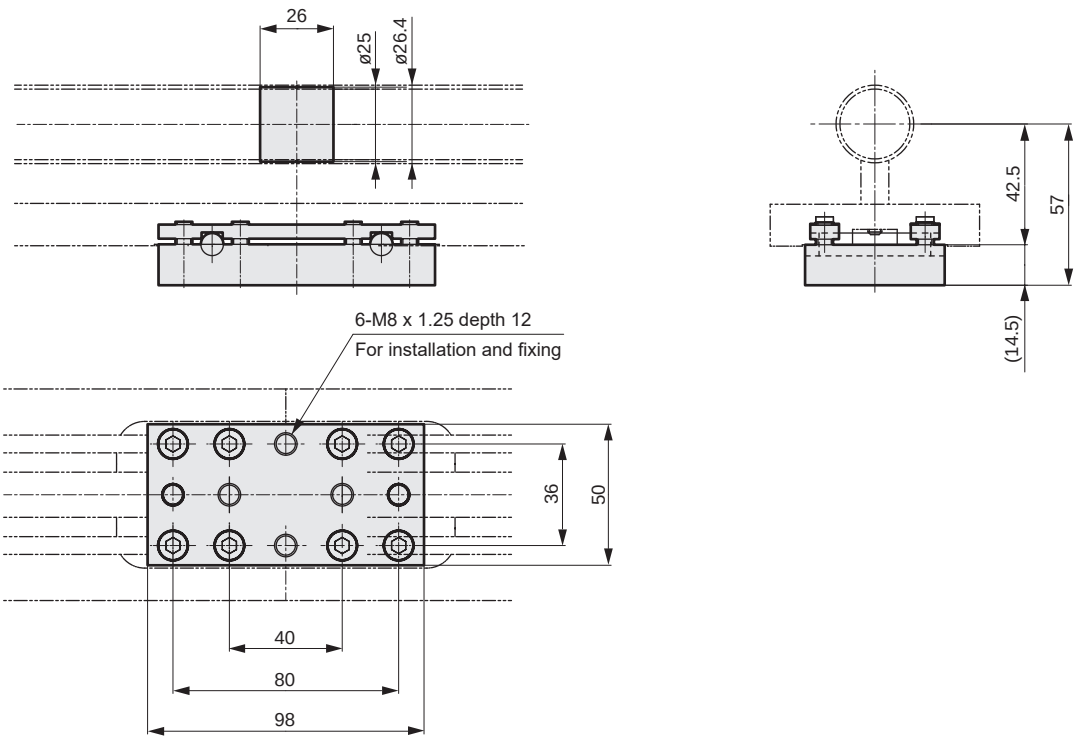

● Fitting/high load (RJ-H)

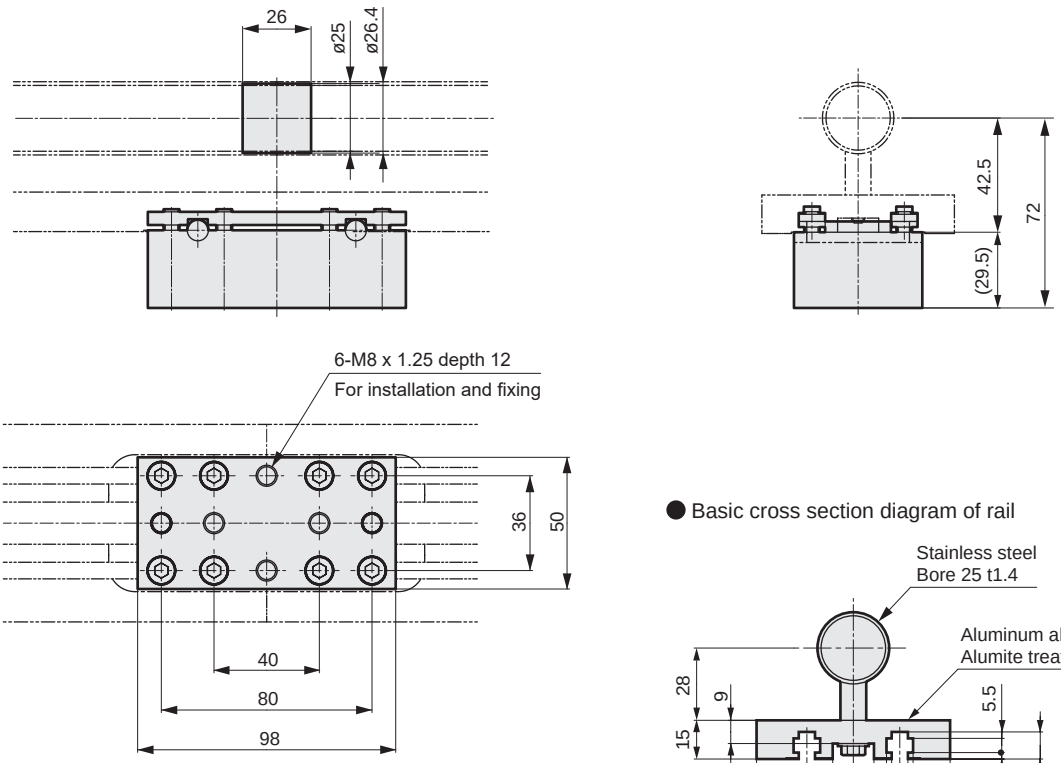

● Basic cross section diagram of rail

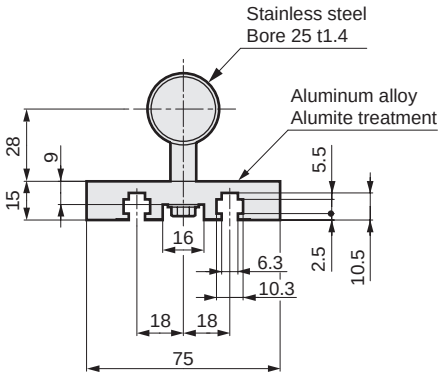

MEMO

SCP*3
CMK2
CMA2
SCM
SCG
SCA2
SCS2
CKV2
CAV2/ COVP/N2
SSD2
SSG
SSD
CAT
MDC2
MVC
SMG
MSD/ MSDG
FC*
STK
SRL3
SRG3
SRM3
SRT3
MRL2
MRG2
SM-25
ShkAbs
FJ
FK
Spd Contr
Ending

Dimensions Only the fittings change between ST (standard) and ST-H (high load). The dimensions of the body of the unit are identical.

● Straight unit (ST)/high load (ST-H)

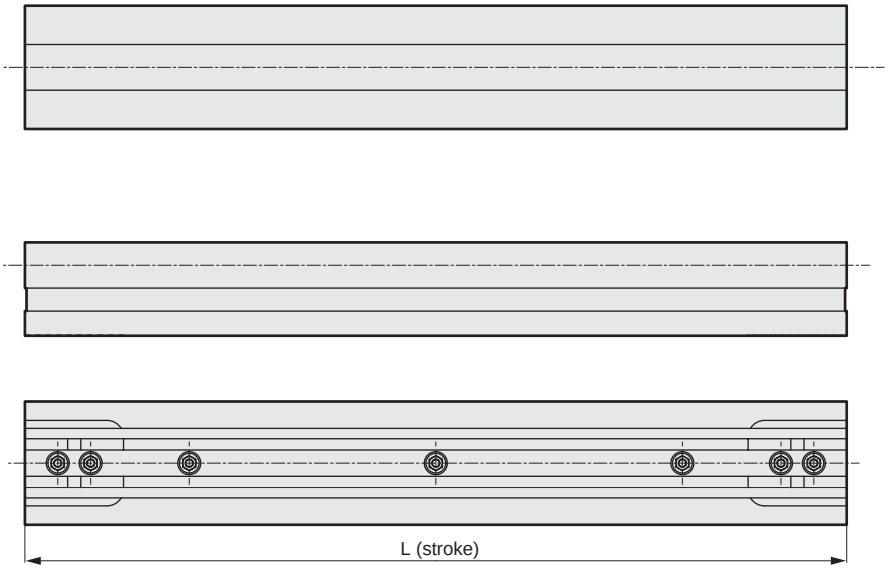

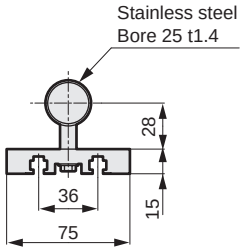

Dimensions Only the fittings change between ST (standard) and ST-H (high load). The dimensions of the body of the unit are identical.

● Lateral curve unit 90° (SC90)/high load (SC-H90)

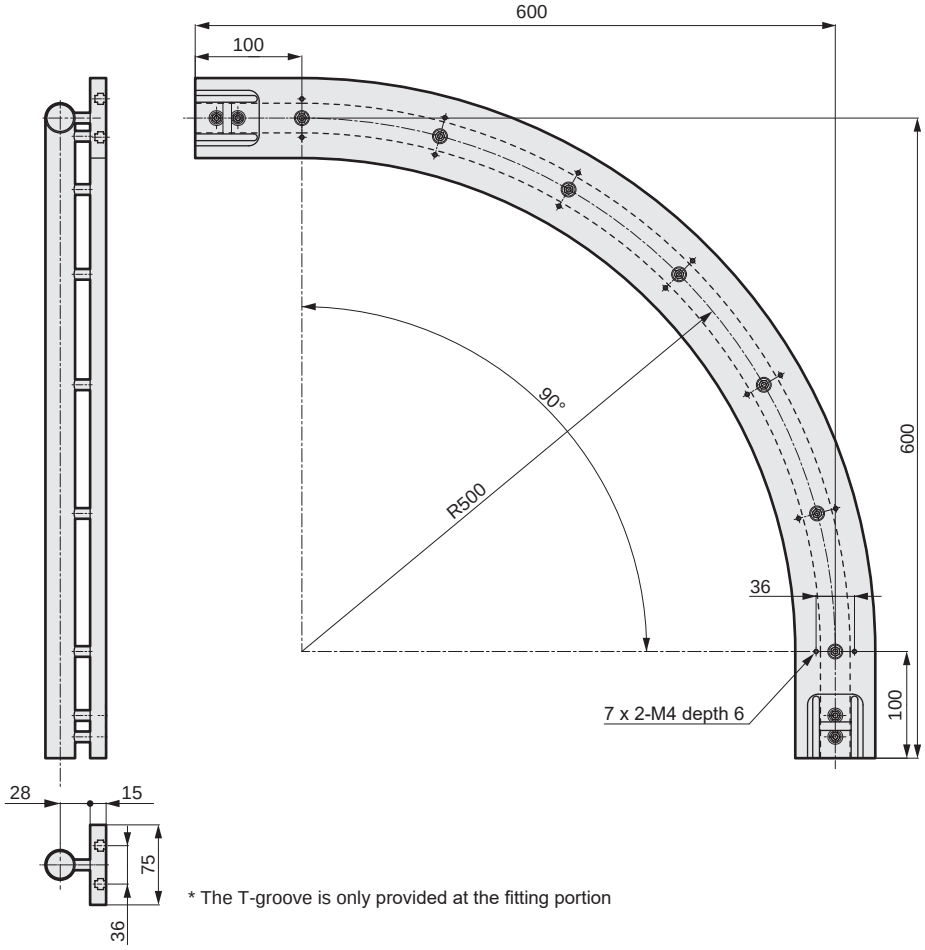

* The T-groove is only provided at the fitting portion

● Lateral curve unit 45° (SC45)/high load (SC-H45)

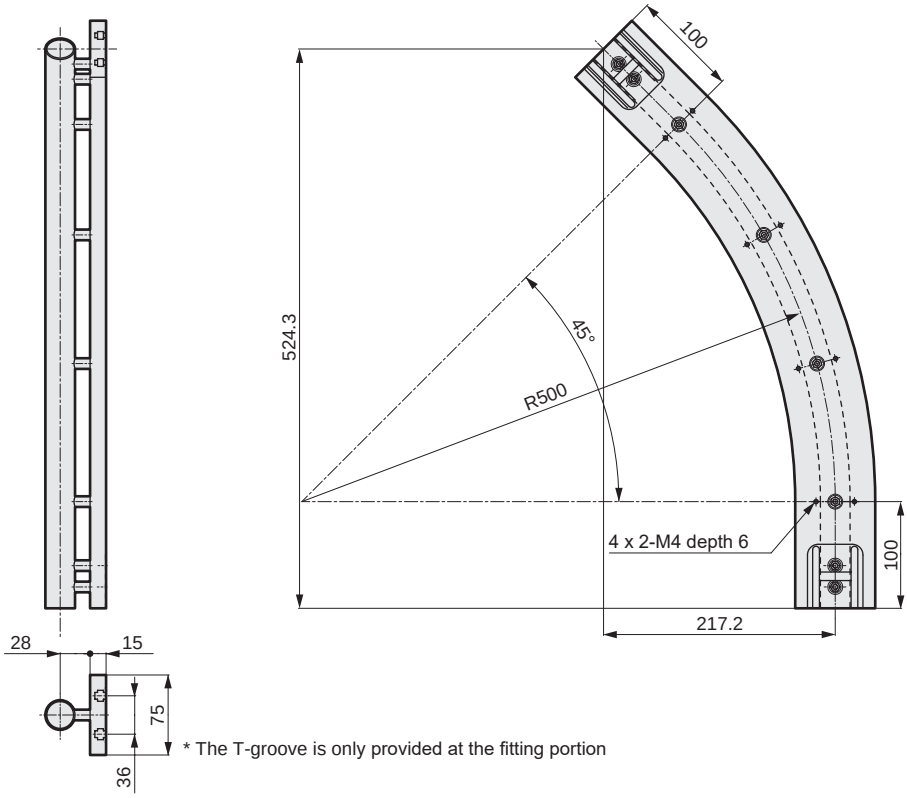

* The T-groove is only provided at the fitting portion

SCP*3
CMK2
CMA2
SCM
SCG
SCA2
SCS2
CKV2
CAV2/ COVP/N2
SSD2
SSG
SSD
CAT
MDC2
MVC
SMG
MSD/ MSDG
FC*
STK
SRL3
SRG3
SRM3
SRT3
MRL2
MRG2
SM-25
ShkAbs
FJ
FK
Spd Contr
Ending

Dimensions

Only the fittings change between ST (standard) and ST-H (high load). The dimensions of the body of the unit are identical.

● Vertical (in) curve unit 90° (VC-90-IN)/high load (VC-H90-IN)

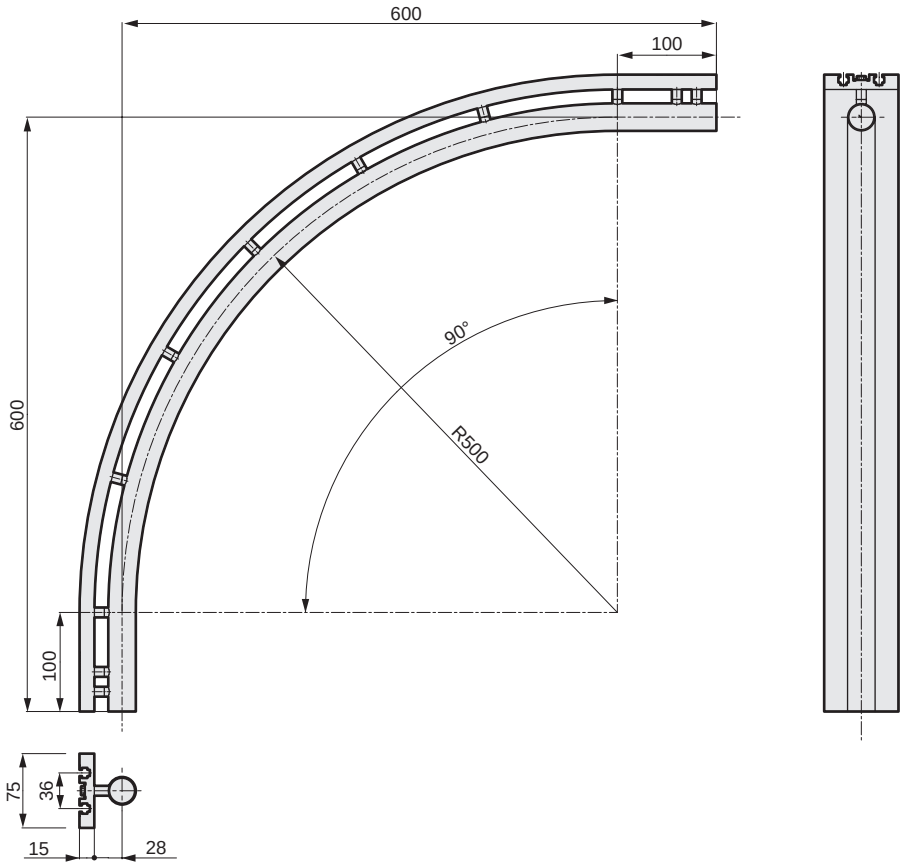

● Vertical (in) curve unit 45° (VC-45-IN)/high load (VC-H45-IN)

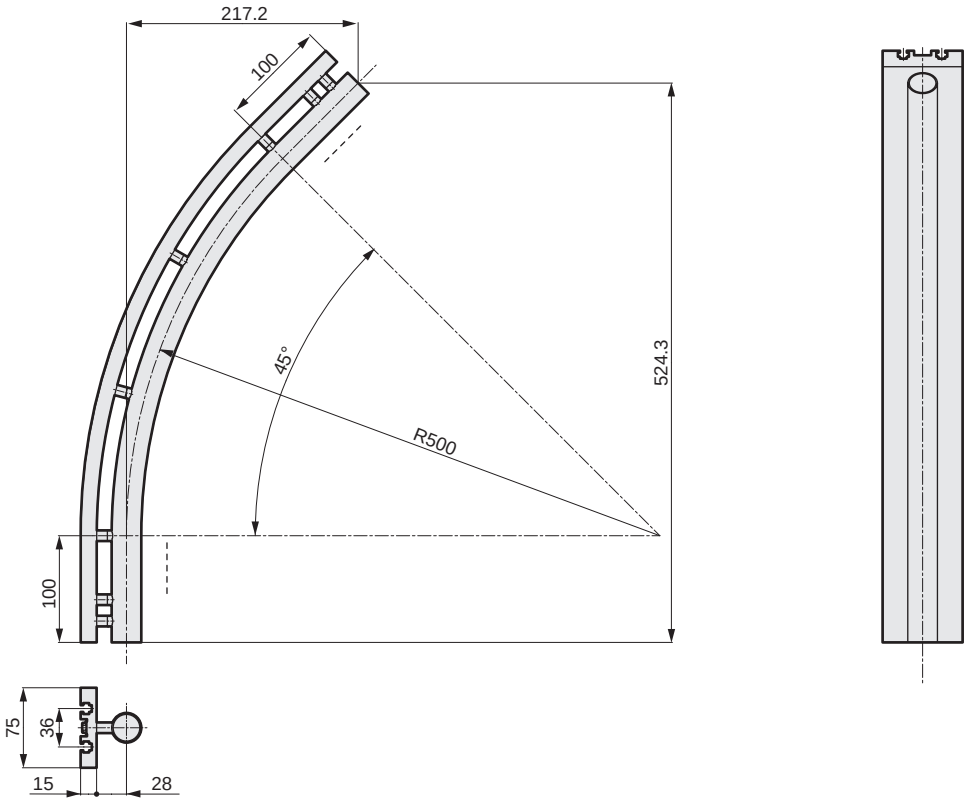

Dimensions Only the fittings change between ST (standard) and ST-H (high load). The dimensions of the body of the unit are identical.

● Vertical (out) curve unit 90° (VC-90-OUT)/high load (VC-H90-OUT)

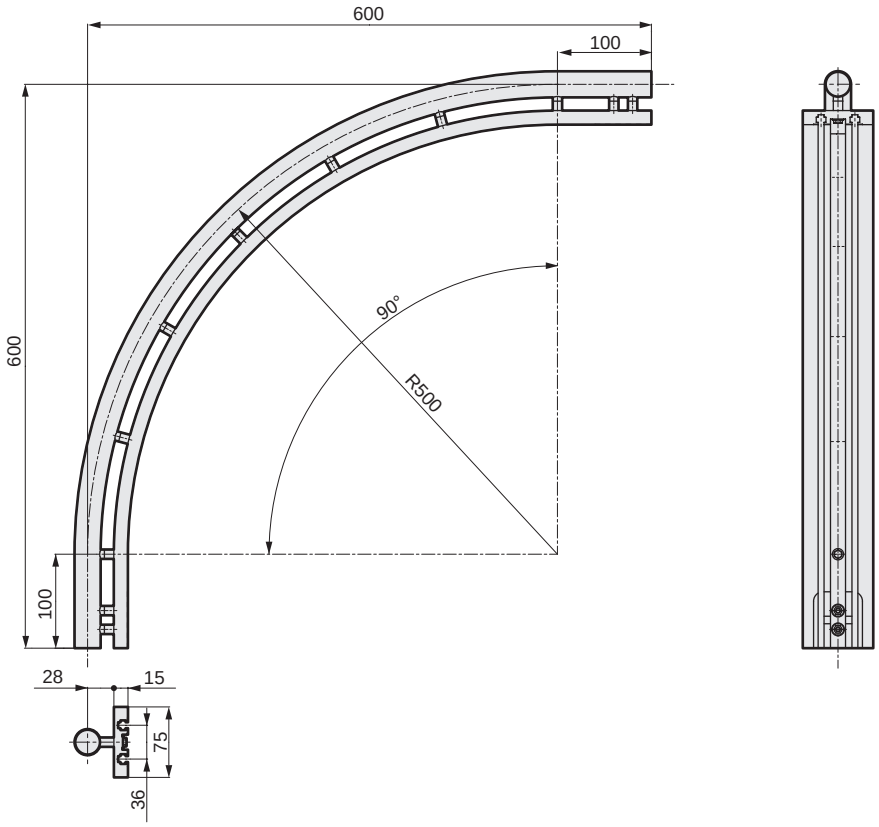

● Vertical (out) curve unit 45° (VC-45-OUT)/high load (VC-H45-OUT)

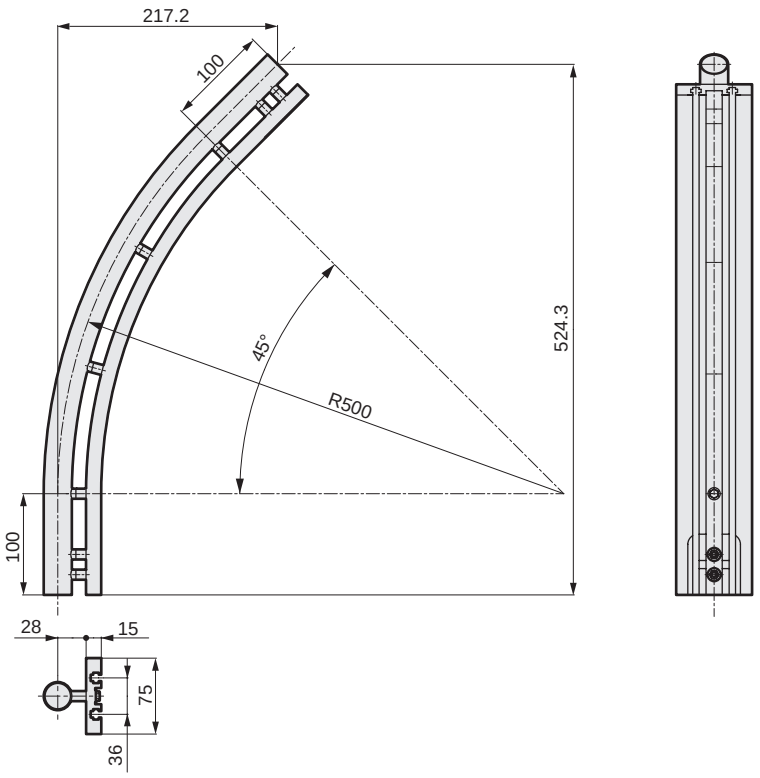

SCP*3
CMK2
CMA2
SCM
SCG
SCA2
SCS2
CKV2
CAV2/COVP/N2
SSD2
SSG
SSD
CAT
MDC2
MVC
SMG
MSD/MSDG
FC*
STK
SRL3
SRG3
SRM3
SRT3
MRL2
MRG2
SM-25
ShkAbs
FJ
FK
Spd Contr
Ending

Technical data

1 Basic circuit

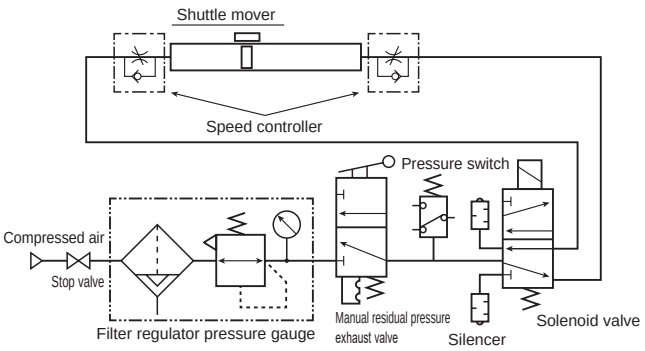

2 Selection guide

The max. allowable load weight will vary depending on the amount of overhang of the center of gravity of the load and the average working speed.
Accordingly, make a selection that satisfies both the following step 1 and step 2.

STEP 1 Load weight and amount of overhang

* The allowable load weight will vary depending on the amount of overhang.
  Use this product within the range of the following graph (1).
* Refer to the examples of selection when calculating amount of overhang L.

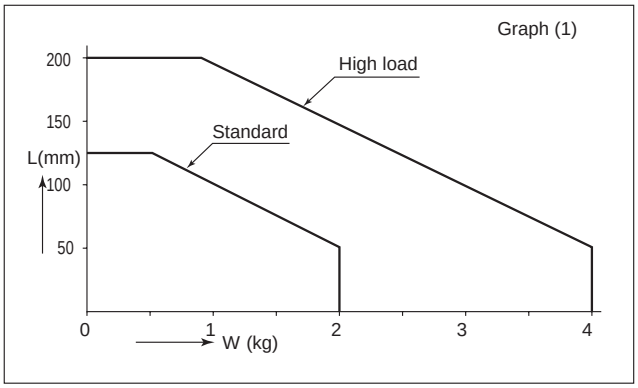

STEP 2 Load weight and average speed

* The average speed available during use will vary depending on the load weight.
  Use this product within the range of the following graph (2).
* When using the product with an average speed of 0.5 m/s or above, it is necessary to provide a deceleration circuit such as a shock absorbing valve (SKH series).
* Refer to the corresponding pages of the catalog for pneumatic valves for selection and use of a shock absorbing valve (SKH series).

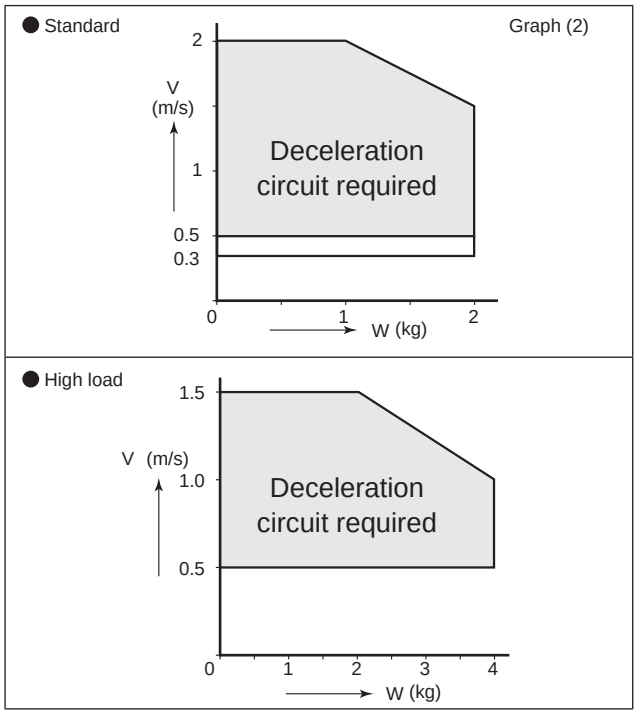

● Example of selection

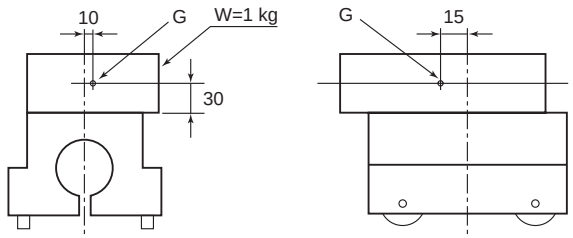

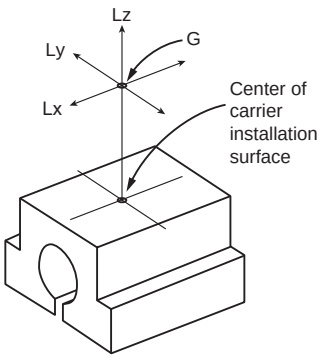

W : Load weight
G : Center of gravity of load
Lx : Displacement of G in X direction
Ly : Displacement of G in Y direction
Lz : Displacement of G in Z direction
L : Amount of overhang
L=Lx+Ly+Lz

W=1 kg
V=1.5 m/s
Lx=15 mm
Ly=10 mm
Lz=30 mm
L=15+10+30=55 mm

When using the product with a load weight of 1 kg and a speed of 1.5 m/s, according to graph (2) as long as W = 1 kg, the speed is up to 2 m/s which is within the range. However, the use of a deceleration circuit will be necessary.
In relation to the displacement of the position of center of gravity of the load, since up to 100 mm is allowed according to graph (1) as long as W = 1 kg, a displacement of the center of gravity by L = 55 mm is within the allowable range.

Technical data

● Example of deceleration circuit diagram

* An example when a shock absorbing valve is used.

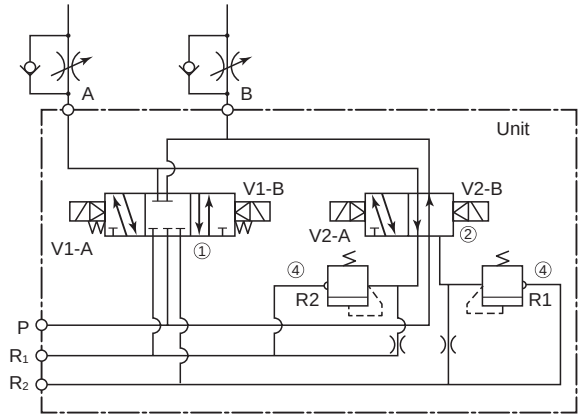

	Part name	Model No.	Qty.	Remarks
1	Solenoid valve	4KB339	1	For high speed
2	Solenoid valve	4KB329	1	For low speed
3	Manifold block		1	
4	Spacer relief valve	SKH-3SR	1	

● Other precautions

(1) A shuttle valve will be necessary when operating a single acting chuck, etc., by using an air supply unit (PP).

(2) Make sure the installation base has a vertical leveling function (leveling bolts, etc.), and fix with anchor bolts after final adjustment.

(3) Use an interval of 2 m as a guide for the pitch between legs upon installation.

(4) When transferring workpieces between the shuttle mover and other facilities of your company (such as a conveyor), be sure to include a transfer position adjustment mechanism in your equipment.

(5) Consult with a sales representative for other detailed designs.

3 Stroke of each unit

Unit name	Model No.	Stroke (mm)
Rail end	RE	75±10
Straight unit	[Example] ST-100	100
	ST-200	200
	ST-1000	1000
	ST-1015	1015
	ST-2000	2000
Curve unit 90°	SC90 VC90-IN VC90-OUT	985
Curve unit 45°	SC45 VC45-IN VC45-OUT	590

* The strokes are the same with the standard and the high load.

4 Min. dimensions of combination with a curve unit

1) 90° and 90°

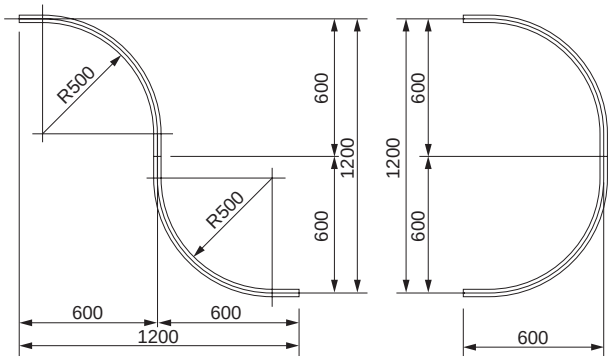

2) 45° and 45°

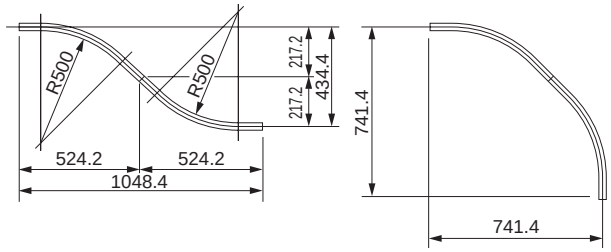

3) 90° and 45°

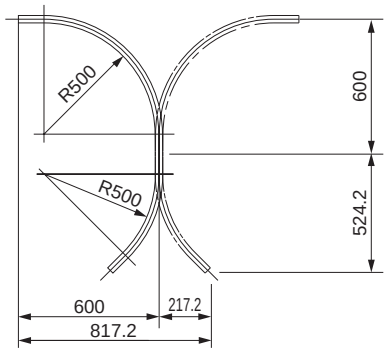

Question & Answer

Notes regarding design

Q Is it possible to stop the carrier midway?

A No, it is not.

Q What is the air consumption of SM-25?

A Same as a standard cylinder with an inner diameter of ø25.

Q What speed should be assumed in m/s when considering the transportation time? (When making an approximation in consideration of the combination of rails, the difference in load weight, and various conditions such as the decelerating time and working pressure)

A Estimate at a speed of 1 m/s.
(Example: With a stroke of 20 m, 20 m ÷ 1 m/s = 20 s; this time does not include workpiece loading time.)

Q Is the max. allowable load weight equivalent to the weight of the workpiece?

A This is the total load weight that is mounted on the carrier.
The hand-chuck and Z-axis cylinder weights are included as well.

Notes regarding safety

Q Is the safety cover necessary?

A Yes, it is. Always install the cover as objects will be transported at high speeds overhead and may fall as they are air cylinders using a joint system.

Q What will happen if the carrier is not slowed down at the stroke end? (given speed of 0.5 m/s or above)

A The shock absorber may be damaged. Always be sure to use a decelerating circuit such as a shock absorbing valve (SKH series).

Notes regarding maintenance

Q Is it possible to replace the carrier rollers?

A Since specially designed tools are necessary, contact CKD as we perform overhauls for a fee.

Q Is it necessary to lubricate the carrier rollers?

A Since it uses shielded metal bearings with urethane rubber, it can be used with no lubrication.

Q How can we adjust the stroke?

A Adjustments of 10 mm forward and 10 mm backward may be made at the rail end. Refer to the instruction manual for details on how to make adjustments.

Notes regarding electric control

Q Is there a reed switch for detection of the carrier?

A No such feature is available.
Prepare a proximity sensor, photoelectric sensor, or photo sensor.

Q How should the electrical signals of the actuator mounted on the carrier be handled?

A This cannot be done as there are no parts available for supplying electricity to the reed switch, etc., for confirming operation.

Safety Precautions

Be sure to read this section before use.
Refer to Intro Page 73 for general information of the cylinder, and to Intro Page 80 for general information of the cylinder switch.

SCP*3
CMK2
CMA2
SCM
SCG
SCA2
SCS2
CKV2
CAV2/ COVP/N2
SSD2
SSG
SSD
CAT
MDC2
MVC
SMG
MSD/ MSDG
FC*
STK
SRL3
SRG3
SRM3
SRT3
MRL2
MRG2
SM-25
ShkAbs
FJ
FK
Spd Contr
Ending

Product-specific cautions: Shuttle mover SM Series

Design/selection

WARNING

■ These products cannot be used in water, oil, or powder, or in places where the unit will be exposed to cutting fluid, coolant, etc., or cutting chips.

■ Consider safety by always placing an interlock in the control circuit for moving the carrier.

■ It is not possible to fix the carrier and use the rail portion as a mobile unit.

■ Avoid scratching the cylinder tube or rail with a workpiece, etc., that has been dropped by mistake during mounting or removal of a workpiece. Otherwise, malfunctions may result.

CAUTION

■ Check that the cross-section of the pipe connecting the cylinder and directional control valve has sufficient effective cross-sectional area to attain specified piston speed.

■ Use an interval of 2 m as a guide for the mounting pitch for the legs.

■ Consider the space described below near the end unit.

- Securing of space necessary for mounting and removing workpieces
- Securing of space for an adjustment of ±10 mm from the stroke end of the carrier
- Securing of space to enable movement when the tube piping to the piping port of the end is adjusted by ±10 mm, and space for adjustment of the speed controller
- Securing of space for removal of end rail related components during piston maintenance

Mounting, installation and adjustment

WARNING

■ Be sure to install a safety cover in cases when this unit will be crossing pathways or working areas of people, or as a measure to prevent collapse and protect the operating region in areas where a human hand can reach inside.

■ Do not move this unit by striking it with a hammer or hang it directly with wire ropes, etc.

■ Immediately after completing installation (before supplying air), manually slide the carrier to make sure that there are no objects that will cause interference within the operating region.

■ The adjustments of the stroke end by ±10 mm are to be made by sliding the entire end block. The magnetic connection between the carrier and the piston will become detached if the screw-in volumes of the shock absorber and the stopper are adjusted.

CAUTION

■ The block of the port will slide to enable adjustment of the stroke end by ±10 mm. Use a nylon or urethane tube for piping in these areas and ensure that there is enough slack in length. Use ø12 x ø8 mm as a guide for the tube size.

■ When torsion, bending, or tension is applied to the rail due to installation of the legs, air will leak from the fitting areas. Do not apply excessive force.

■ Prevent foreign matter, such as cutting chips from drills used during installation work, from entering the cylinder tubes during installation and assembly.

Use/maintenance

⚠ WARNING

■ The most desirable range of the ambient temperature for use of the cylinders is 5 to 40°C. Do not use the unit if the temperature exceeds 40°C, or damage and/or misoperations may occur. If the temperature is less than 5°C, moisture in the circuit may freeze and lead to damage or faults. Take measures to prevent freezing.

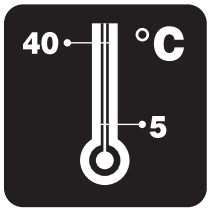

■ The shuttle mover is a magnetic rodless cylinder. As a magnet is embedded, do not bring objects that are affected by magnets (magnetic disks, magnetic cards, magnetic tape, testers, etc.) near the unit.

■ When an external force that is greater than or equal to the magnetic holding force is applied, the magnetic connection between the carrier and the piston will become detached.

■ Sandwiching a foreign object between the carrier and the rail will cause defective operation.

■ Grease has been applied within the cylinder tubes. Be careful that foreign matter such as cutting chips does not enter the unit during assembly or disassembly.

⚠ CAUTION

■ When operation becomes unstable due to a shortage of lubrication, remove the piston and apply grease. Refer to the instruction manual for details on applying grease.
Use the driving distance of 2,000 km as a guide for the timing of periodic applications of grease.

■ Regular cleaning is necessary to improve the rotation of the guide rollers when using the product in a place where the rail, etc., is likely to become dirty.

Related products

	Page
Shock absorber **SKL, NCK, SCK, FCK** Series	1809
Floating fitting **FJ** Series	1863
Simplified floating fitting **FK** Series	1873
Speed controller	1879

SKL/NCK/SCK/FCK

Shock absorber

Related products

CONTENTS

Shock absorber product MAP 1810
● Shock absorber/fixed (SKL) 1811
● Shock absorber/fixed (NCK) 1819
● Shock absorber/adjustable (SCK) 1831
● Shock absorber/adjustable (FCK) 1839
⚠ Safety precautions 1859

●: Standard, ◎: Option, ○: Made to order, ▒: Not available

Type	Model No.		Max. colliding speed working range m/s	Max. energy absorption (J) 5 10 50 100 500 1000	Mounting: Basic 00	Mounting: Flange FA	Option: With stop nut N1	Option: Capped C	Option: Deflection angle adaptor	Page
Fixed	SKL		to 1.0	0.2 3.6						1811
Fixed	NCK		to 3.0	1 200	●	◎	◎	◎		1819
Adjustable	SCK		to 4.0	0.049 588	●	◎	◎			1831
Adjustable	FCK	Low speed	to 1	1.5 720	●		◎	◎	◎	1839
Adjustable	FCK	Medium speed	to 2		●		◎	◎	◎	
Adjustable	FCK	High speed	to 3		●		◎	◎	◎	

Shock absorber product MAP

◎: Excellent ○: Good △: Average

		SKL	NCK	SCK	FCK		
					L (low speed)	M (medium speed)	H (high speed)
Working speed	Low speed (to 1m/s)	◎	◎	△	◎		
	Medium speed (1 to 2 m/s)		◎	△		◎	
	High speed (from 2 m/s)		△	◎			◎
Working conditions	Simultaneous use of thrust force	◎	◎	△	△	◎	△
	Free fall (high speed collision)	△	△	◎	△	○	○
Size/structure	Size	Small	Small	Large	Medium	Medium	Medium
	Adjuster adjustment	Fixed	Fixed	Adjustable (fixed)	Adjustable		
	Orifice	Slit orifice	Slit orifice	Balance valve	Single hole orifice	Porous irregular orifice	Porous orifice
		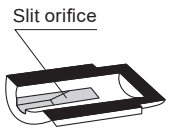	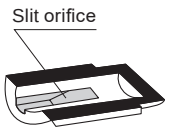	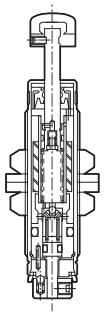	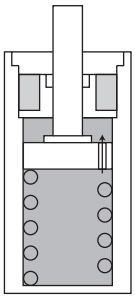	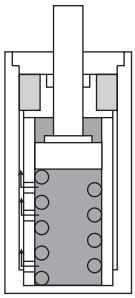	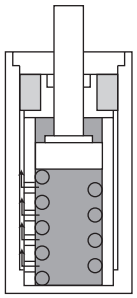
	Tube	Single	Single	Double	Single/double	Double	Double
Energy absorption characteristics	Relation of stroke (S) and resistance (F)	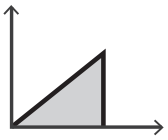	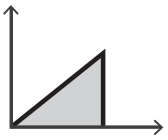	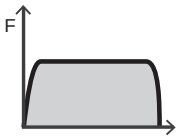	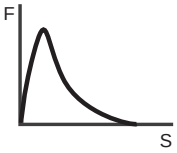	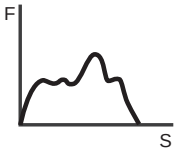	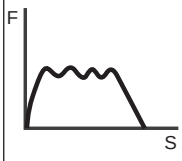
	Operation characteristics	The slit orifice matched to the linear slide cylinder enables lower tact times and smooth stopping performance.	The slit orifice enables smooth stop performance. With the triangle waveform, the speed gradually decreases while energy is absorbed.	Trapezoidal waveform, with the most efficient energy absorption.	Since the orifice area is constant throughout the full stroke, resistance increases immediately after collision, and decreases as the stroke advances and speed declines.	This type is designed so that the kinetic energy is absorbed in the first half of the stroke and the speed is controlled in the second half. Energy is absorbed ideally for cylinder thrust.	The orifice area gradually decreases as the stroke advances and speed slows down. Resistance thus fluctuates in a wave, but max. resistance is suppressed at a low level.

SKL

Shock absorber/fixed

Related products

Overview

Maximization of the installation capacity with lower tact times, long service life.
A shock absorber that achieves smooth stoppage.

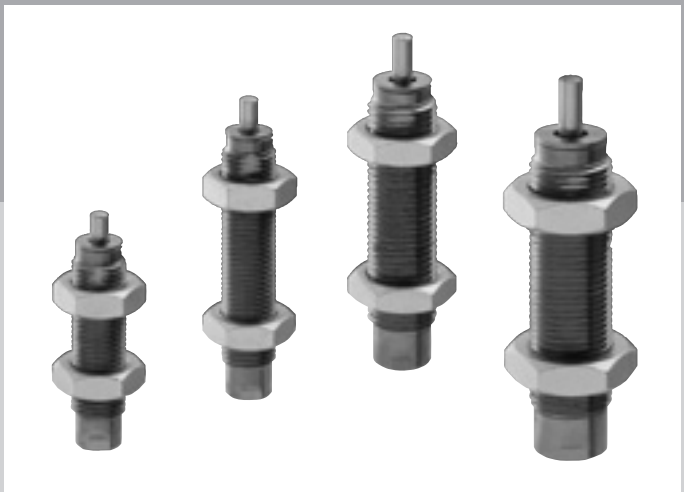

CONTENTS

Series variation	1809
Product introduction	1812
● SKL (Max. absorbed energy: 0.2 to 3.6 J)	1814
Selection guide	1816
⚠ Safety precautions	1859

Improves equipment tact time and contributes to increased productivity!

Linear slide cylinder

Built into LCR and LCG for optimization.

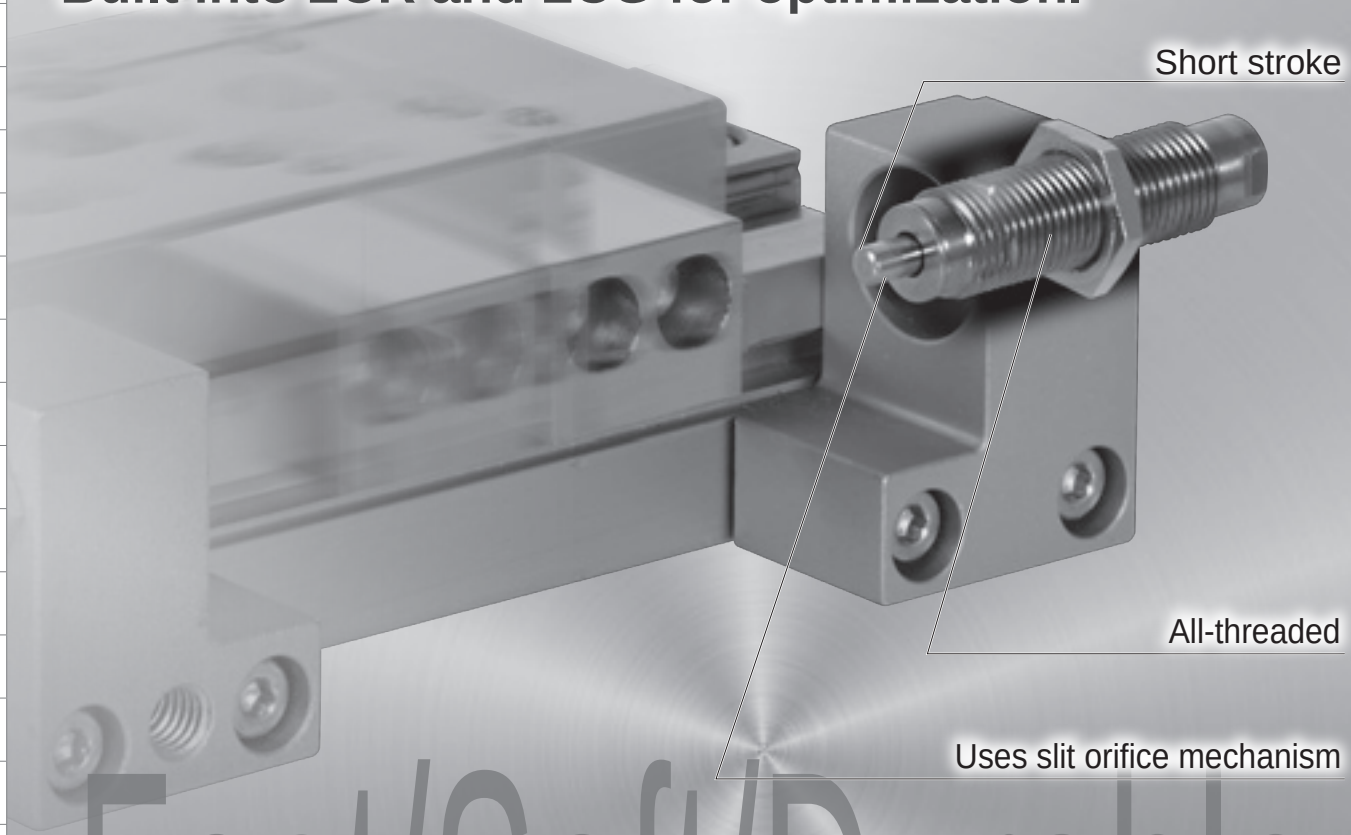

Fast/Soft/Durable

Shock absorber for linear slide cylinder

SKL Series

Model variations

Four types are available, matching the maximum absorbed energy suited to each linear slide cylinder.

Model variations		Thread size	Stroke length (mm)	Absorbed energy (J)
SKL Series	SKL-0804	M8×0.75	3.5	
	SKL-0805		4.5	
	SKL-1006	M10×1.0	6	
	SKL-1208	M12×1.0	8	

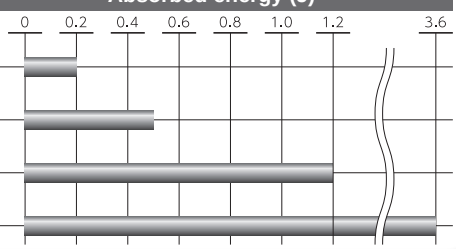

Fast tact

Short stroke dramatically reduces operating time

Compatible with low tact/high-accuracy linear slide cylinder. Reduces equipment operating time and contributes to increased productivity.

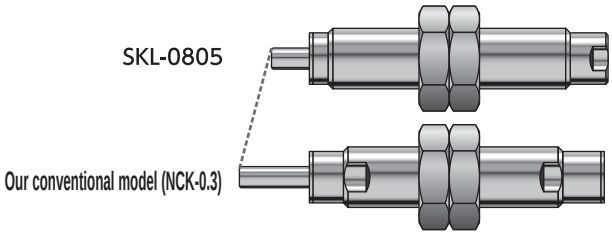

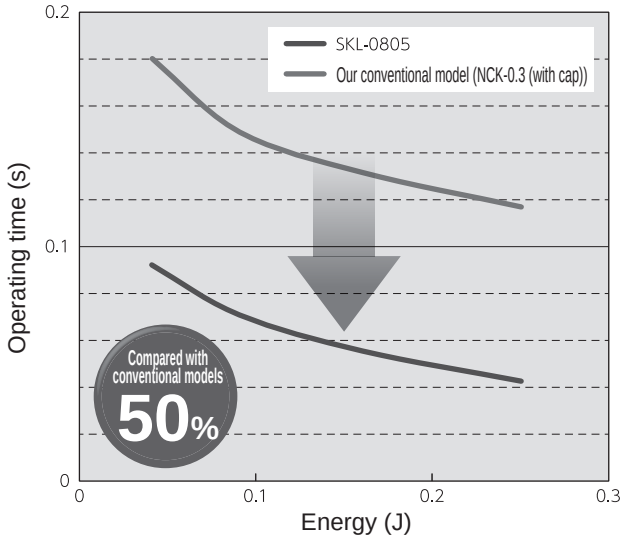

* Data are reference values at cylinder thrust 60 N, room temperature.
Operating time varies according to collision conditions.

Soft stop extends service life

Slit orifice mechanism enables smooth impact absorption characteristics

Uses a slit orifice mechanism in which the orifice surface area smoothly decreases as the piston moves. Realizes an ideal triangular waveform, gentle impacts with soft absorption characteristics.

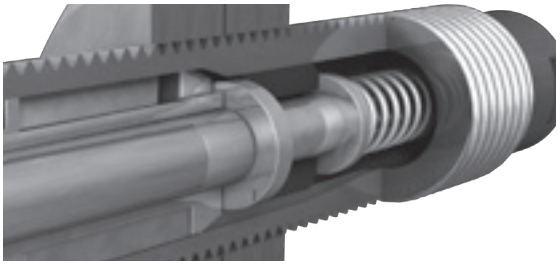

Slit orifice mechanism realizes long service life
The well-regarded slit orifice mechanism has been retained and optimized through specialization for linear slide cylinders.

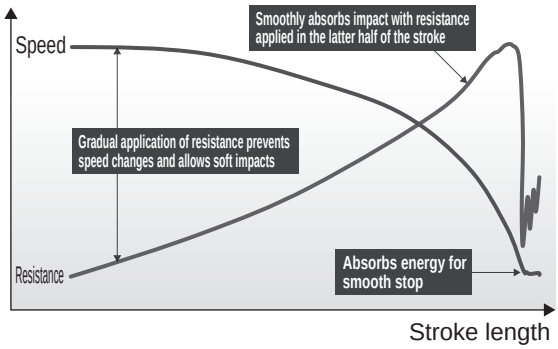

Gradual speed change enables soft stop

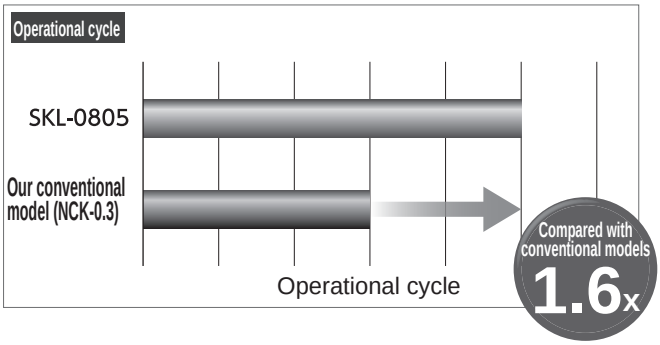

High maintainability

Easy capless mounting

Structure directly receives the slider with the body. Capless and mountable from rod side, allowing shock absorber replacement with the linear slide cylinder still installed.

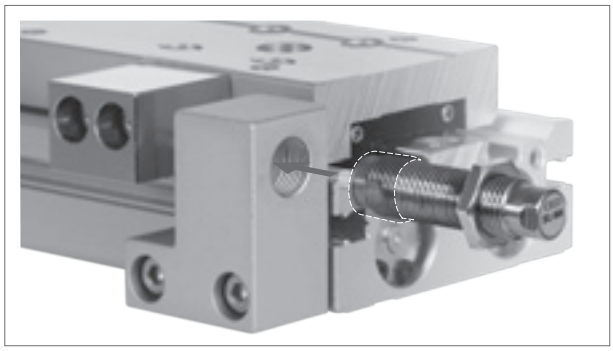

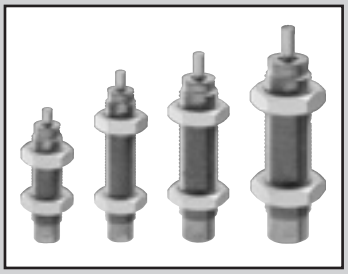

Shock absorber

SKL Series

● Max. energy absorption: 0.2 to 3.6J

RoHS

Specifications

Item		SKL			
Model No.		SKL-0804	SKL-0805	SKL-1006	SKL-1208
Max. energy absorption	J	0.2	0.5	1.2	3.6
O.D. thread size	mm	M8x0.75		M10x1.0	M12x1.0
Stroke	mm	3.5	4.5	6	8
Max. absorbed energy per hour	kJ/hr	0.9	2.4	4.3	12.9
Max. colliding speed	m/s	1.0			
Max. operating frequency	Cycle/min.	80		60	
Ambient temperature	°C	-10 (14°F) to 60 (140°F)			
Max. allowable thrust	N	40	158	281	687
Max. load (rated resistance)	N	152	277	484	1064
Required mounting strength	N	456	831	1452	3192
Return time	s	0.3 or less			
Weight	g	9	12	20	40
Return	When extended N	3.3	3.3	2.3	3.4
Spring force	When compressed N	4.6	4.6	4.2	5.9

Note: The speed and absorption capacity of the shock absorber vary depending on the ambient temperature.
Values given in the above specifications are for room temperature.

How to order

SKL - 08 05

- SKL: Model No.
- 08: Ⓐ Thread size
- 05: Ⓑ Stroke

Code	Description
Ⓐ Thread size	
08	M8x0.75
10	M10x1.0
12	M12x1.0

Ⓑ Stroke (mm)				
	Thread size	**08**	**10**	**12**
04	3.5 mm	●		
05	4.5 mm	●		
06	6 mm		●	
08	8 mm			●

Internal structure and parts list

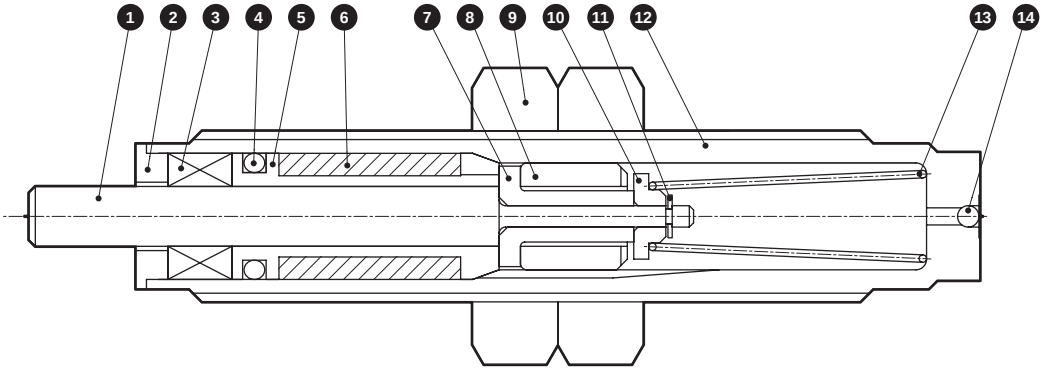

Cannot be disassembled

Parts list

No.	Part name	Material	Remarks	No.	Part name	Material	Remarks
1	Piston rod	Steel	Industrial chrome plating	8	Piston	Cast iron	
2	Cover	Stainless steel		9	Hexagon nut	Steel	Zinc plated
3	Oil seal	Special nitrile rubber		10	Valve stopper	Steel	
4	O-ring	Nitrile rubber		11	E type snap ring	Stainless steel	
5	Rod guide	Aluminum alloy		12	Damper case	Steel	Nickel plating
6	Air chamber	Nitrile rubber		13	Spring	Piano wire	
7	Valve	Steel		14	Steel ball	Steel	

Dimensions

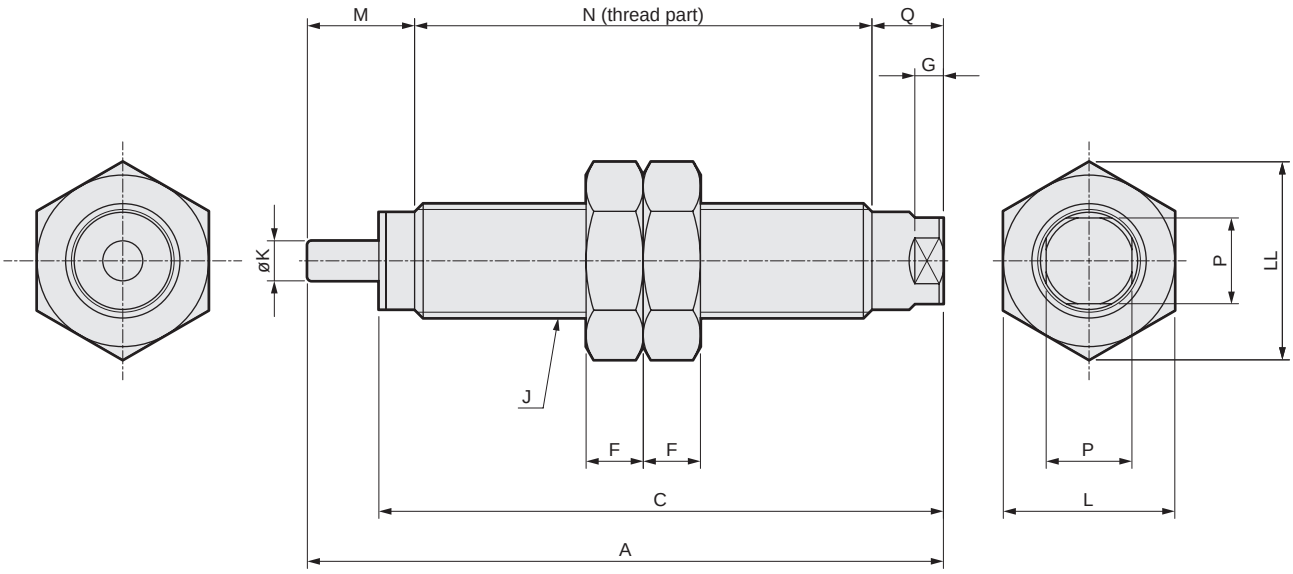

Model No.	A	C	F	G	J	K	L	LL	M	N	P	Q
SKL-0804	34.5	30.5	4	2	M8x0.75	2.8	12	13.9	6.5	23	6	5
SKL-0805	44.5	39.5	4	2	M8x0.75	2.8	12	13.9	7.5	32	6	5
SKL-1006	49	42.5	4	2	M10x1.0	3	14	16.2	9	34	8	6
SKL-1208	56	47.5	5	2	M12x1.0	3.5	17	19.6	12	37	10	7

SCP*3
CMK2
CMA2
SCM
SCG
SCA2
SCS2
CKV2
CAV2/ COVP/N2
SSD2
SSG
SSD
CAT
MDC2
MVC
SMG
MSD/ MSDG
FC*
STK
SRL3
SRG3
SRM3
SRT3
MRL2
MRG2
SM-25
ShkAbs
FJ
FK
Spd Contr
Ending

Shock absorber selection guide

1 Clarify the colliding pattern of the device

Horizontal motion
- a. Simple horizontal collision
- b. Collision with cylinder thrust
- c. Collision with drive force of motor

Vertical motion
- d. Collision due to free fall
- e. Collision with cylinder thrust (downward)
- f. Collision with cylinder thrust (upward)

Slope motion
- g. Collision due to free sliding
- h. Collision with cylinder thrust (downward)
- i. Collision with cylinder thrust (upward)

Oscillation/ rotation motion
- j. Collision due to free oscillating fall
- k. Colliding with torque of motor, etc., (oscillation)
- l. Colliding with torque of motor, etc., (rotation)

Note: Refer to "Example of colliding pattern".

2 Make required conditions/descriptions clear to calculate energy

E = all absorbed energy (J)
E_1 = kinetic energy (J)
E_2 = thrust/self-weight energy (J)

L = colliding object travel distance (m) (Slope free fall)
R = distance from center of rotation to colliding point (m)
r = distance from center of rotation to center of gravity (m)
G = position of center of gravity

M = colliding weight (kg)
V = colliding speed (m/s)
S = SKL stroke (m)
F = pushing force (N)
g = gravity acceleration 9.8 m/s²
ω = angular speed (rad/s)
J = moment of inertia (kg/m²)
D = diameter (m)
N = number of rotations (rpm)
Me = equivalent weight (kg)

H = drop height (m)
T = torque (N·m)
Td = motor start torque (N·m)
K = reduction ratio
θ, α, β = tilt angle (deg)

3 Calculate actual energy in accordance with the sample figure for the colliding pattern

	Horizontal colliding			Vertical colliding		
	a. Simple horizontal collision	b. Pushing force of cylinder applies	c. Pushing force of motor applies	d. Free fall	e. Cylinder lower limit stopper	f. Cylinder upper limit stopper
Applications	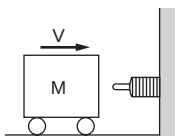	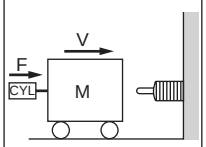	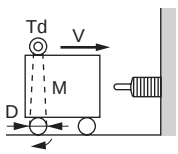	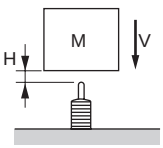	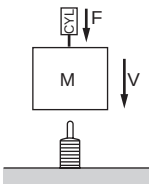	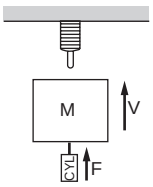
Kinetic energy E_1(J)	$\frac{1}{2}\cdot M\cdot V^2$	$\frac{1}{2}\cdot M\cdot V^2$	$\frac{1}{2}\cdot M\cdot V^2$	$\frac{1}{2}\cdot M\cdot V^2$	$\frac{1}{2}\cdot M\cdot V^2$	$\frac{1}{2}\cdot M\cdot V^2$
Thrust/self-weight energy E_2(J)	-------	$F\cdot S$	$2\cdot\frac{K}{D}\cdot Td\cdot S$	$M\cdot g\cdot S$	$(M\cdot g+F)\cdot S$	$(F-M\cdot g)\cdot S$
All absorbed energy E (J)	$E = E_1$	$E = E_1+E_2$	$E = E_1+E_2$	$E = E_1+E_2$	$E = E_1+E_2$	$E = E_1+E_2$
Equivalent weight Me(kg)	$Me = M$	$Me = \frac{2\cdot E}{V^2}$	$Me = \frac{2\cdot E}{V^2}$	$Me = \frac{2\cdot E}{V^2}$ $(V=\sqrt{2\cdot g\cdot H})$	$Me = \frac{2\cdot E}{V^2}$	$Me = \frac{2\cdot E}{V^2}$

	Slope colliding			Oscillation colliding		Rotation colliding
	g. Free fall	h. Pushing force of cylinder applies	i. When thrust of cylinder is applied	j. Free fall	k. Torque of motor, etc., applies	L. Torque of motor, etc., applies
Applications	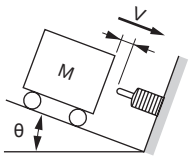	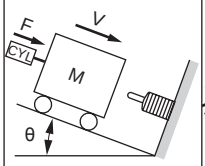	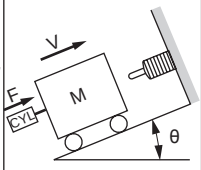	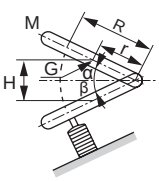	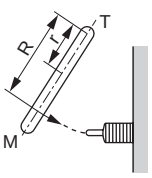	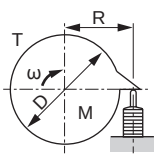
Kinetic energy E_1(J)	$\frac{1}{2}\cdot M\cdot V^2$	$\frac{1}{2}\cdot M\cdot V^2$	$\frac{1}{2}\cdot M\cdot V^2$	$M\cdot g\cdot H$	$\frac{J\cdot\omega^2}{2}$ or $\frac{1}{2}\cdot M\cdot V^2$	$\frac{J\cdot\omega^2}{2}=\frac{M\cdot D^2\cdot\omega^2}{16}$
Thrust/self-weight energy E_2(J)	$M\cdot g\cdot S\cdot\sin\theta$	$(M\cdot g\cdot\sin\theta+F)\cdot S$	$(F-M\cdot g\cdot\sin\theta)\cdot S$	$\frac{r}{R}\cdot M\cdot g\cdot S$	$\frac{T}{R}\cdot S$	$\frac{T}{R}\cdot S$
All absorbed energy E (J)	$E = E_1+E_2$	$E = E_1+E_2$	$E = E_1+E_2$	$E = E_1+E_2$	$E = E_1+E_2$	$E = E_1+E_2$
Equivalent weight Me(kg)	$Me = \frac{2\cdot E}{V^2}$ $(V=\sqrt{2\cdot g\cdot L\cdot\sin\theta})$	$Me = \frac{2\cdot E}{V^2}$	$Me = \frac{2\cdot E}{V^2}$	$Me=\frac{2\cdot E}{V^2}$ $(V=\frac{R}{r}\sqrt{\frac{3\cdot g\cdot H}{2}})$	$Me = \frac{2\cdot E}{V^2}$ $(V=\omega\cdot R)$	$Me = \frac{2\cdot E}{V^2}$ $(V=\omega\cdot R,\ \omega=\frac{2\pi\cdot N}{60})$

● Explanation of code
E = all absorbed energy J
E_1 = kinetic energy J
E_2 = thrust/self-weight energy J

a. Kinetic energy..... Calculate the E_1 value according to "Example of colliding pattern".
b. Thrust/self-weight energy ..... Calculate the value of E_2 according to "Example of colliding pattern". For S (stroke of SKL) in the formula, select a model whose max. absorbed energy exceeds E_1, and use S for that model No.
c. Total absorbed energy..... If after that the calculation result exceeds Emax (max. energy absorption), select one size larger SKL than the previously selected model No., and recalculate. If calculated E is lower than Emax selected model No., the selection is acceptable.

4 Confirm the equivalent weight

a. Calculate value of Me according to "Example of colliding pattern".
b. Usable if Me is within Me range of selected model (calculated value of Me < specified value of Me) according to calculation of Me (catalog value) and "a" for model No. selected at 3.
c. When exceeding the Me range of the selected model at b, select an SKL one size larger, and check conditions in the same manner.

Note: Equivalent mass corresponds to weight of workpiece, even for body moving with thrust, etc., if it is assumed that all of them are kinetic energy only. This allows the load to be controlled at very low speed conditions.

Equivalent weight graph

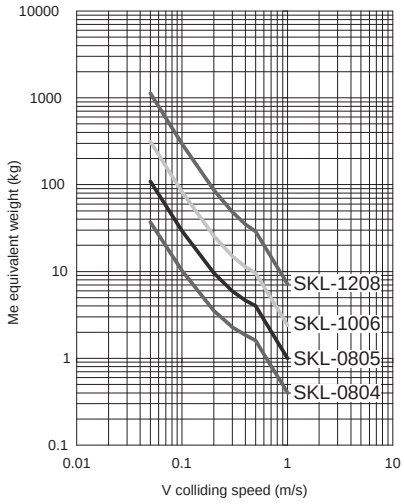

5 Confirm shock absorber specifications range

a. Max. repeating cycle	[cycle/min.]	c. Ambient temperature	[°C]
b. Max. colliding speed	[m/s]	d. Return time	[s]

Note: Value of allowable energy absorption may vary depending on colliding speed.

Example of selection

1 Clarify the colliding pattern of the device

Applications	Vertical colliding e. Cylinder lower limit stopper 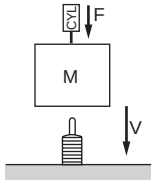
Kinetic energy E_1(J)	$E_1 = \frac{1}{2} \cdot M \cdot V^2$
Thrust/self-weight energy E_2(J)	$E_2 = (Mg + F) \cdot S$
All absorbed energy E (J)	$E = E_1 + E_2$
Equivalent weight Me (kg)	$Me = \frac{2 \cdot E}{V^2}$

2 Make required conditions/descriptions clear to calculate energy

(Example)

Colliding object weight:	M=1.0 kg
Colliding speed:	V=0.5 m/s
Pushing force:	F=70 N
Frequency:	30 cycle/min.
Ambient temperature:	23°C
Return time:	2s (time up to re-collision)

3 Calculate actual energy in accordance with the sample figure for the colliding pattern.

Calculate E_1

$$E_1 = \frac{1}{2} \cdot MV^2 = \frac{1}{2} \times 1 \times 0.5^2 = 0.13 \text{ (J)}$$

Tentatively select SKL-0804 from E_1, then calculate E_2

$E_2 = (Mg + F) \cdot S = (1 \times 9.8 + 70) \times 0.0035 = 0.28$(J)

As it exceeds the allowable absorbed energy of SKL-0804, recalculate with the one size larger SKL-0805

$E_2 = (Mg + F) \cdot S = (1 \times 9.8 + 70) \times 0.0045 = 0.36$(J)

$E = E_1 + E_2 = 0.13 + 0.36 = 0.49$(J)

Acceptable as it is less than the allowable absorbed energy of SKL-0805

4 Confirm the equivalent weight

$$Me = \frac{2E}{V^2} = \frac{2 \times 0.49}{0.5^2} = 3.92 \text{(kg)}$$

As it is less than the allowable value of SKL-0805, select OK SKL-0805

MEMO

NCK

Shock absorber/fixed

Related products

Overview

Compared to the SCK, the NCK shock absorber is the ideal buffering device for stopping a workpiece with thrust at medium or slow speeds. Slit orifice method that was thought difficult to realize is used. Due to this structure, high absorbing performance and linear soft stop, etc., are achieved in slow speed operation range. Furthermore, the compact, slim, space saving design contributes to the FA system configuration.

Features

Available for thrust energy

Absorbing thrust energy of cylinder, etc., is efficient. Very soft stopping is also achieved.

Smooth absorbing even if slowly operated

Superior characteristics in slow speed range enable smooth impact absorption.

Compact but large absorbing force

Compact and slim design which absorbs a lot of energy. This product is remarkably efficient at saving space.

Simple mounting

Linear soft stop

Extensive models

8 types are available by absorbed energy. Select according to applications.

CONTENTS

Series variation	1809
● NCK (max. absorbed energy 1 to 200 J)	1820
Selection guide	1826
⚠ Safety precautions	1859

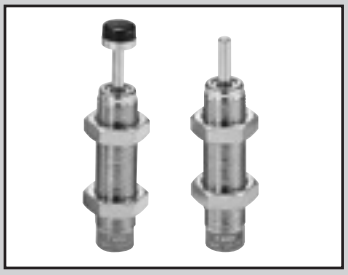

Shock absorber

NCK Series

● Max. absorbed energy: 1 to 200 J

RoHS CAD

Specifications

Item		NCK							
Series		0.1	0.3	0.7	1.2	2.6	7	12	20
Type/Classification		Spring return without adjuster							
Max. energy absorption	J	1	3	7	12	26	70	120	200
O.D. thread size	mm	M8x0.75		M10x1.0	M12x1.0	M14x1.5	M20x1.5	M25x1.5	M27x1.5
Stroke	mm	4.5	6	8	10	15	20	25	30
Max. absorbed energy per hour	kJ/hr	4.8	6.3	12.6	21.6	39.0	84.0	86.4	108.0
Max. colliding speed	m/s	1.0	1.5		2.0		2.5	3.0	
Max. operating frequency	Cycle/min.	80	35	30		25	20	12	9
Ambient temperature	°C	-10 (14°F) to 80 (176°F)							
Max. load (resistance)	N	525	1150	2010	2750	4000	7980	10950	15380
Return time	S	0.3 or less					0.4 or less		0.5 or less
Weight	kg	0.009	0.012	0.02	0.04	0.07	0.2	0.3	0.45
Return spring force: When extended	N	2.9		2.0	2.9	5.9	9.8	16.3	
Return spring force: When compressed	N	4.5		4.3	5.9	11.8	21.6	33.3	33.9

Note: The speed and absorption capacity of the shock absorber vary depending on the ambient temperature. Values given in the above specifications are for room temperature.

How to order

NCK - 00 - 0.7 - N1

- Ⓐ Mounting
- Ⓑ Series
- Ⓒ Option *1

Code	Description
Ⓐ Mounting	
00	Basic
FA	Flange
Ⓑ Series (max. energy absorption)	
0.1	1 J
0.3	3 J
0.7	7 J
1.2	12 J
2.6	26 J
7	70 J
12	120 J
20	200 J
Ⓒ Option	
Blank	Standard
N1	With stop nut
C	Capped

⚠ Precautions for model No. selection

*1: 3 hexagon nuts are provided for N1 specifications products.

[Example of model No.]

NCK-00-0.7-N1

Model: Shock absorber

Ⓐ Mounting : Basic
Ⓑ Series : Max. energy absorption 7 J
Ⓒ Option : With stop nut

How to order options

● Flange bracket (1 pc.)

NCK - 0.7 - FA

● Stop nut + hexagon nut (each 1 pc.)

NCK - 0.7 - N1

● Hexagon nut (1 pc.)

NCK - 0.7 - NT

Code	Series (max. energy absorption)
0.1	1 J
0.3	3 J
0.7	7 J
1.2	12 J
2.6	26 J
7	70 J
12	120 J
20	200 J

Specifications for rechargeable battery (Catalog No. CC-1226A)

NCK - ··· - P4*

● Design compatible with rechargeable battery manufacturing process

* Contact CKD for details.

Operational explanation

(1) Collision
When the workpiece collides with the piston rod, the oil in the tube pushed by the piston is simultaneously pressurized. The pressurized oil passes through grooves on CKD's original slit orifice, and flows toward the oil chamber with an air chamber. The piston is further pressed in by cylinder thrust or workpiece weight, etc., but the area of the slit orifice gradually decreases, so that even higher resistance is generated. These series of operations are done continuously to stop the workpiece smoothly.

(2) Return
When released from the workpiece, the piston returns with the integrated spring. At this time it moves from the seal to the valve stopper, so that the oil return flow path is opened by the cutoff section on the piston. Oil passes through this flow path and the slit orifice and returns to the state before the workpiece collided. In this state, the system is on standby for the next workpiece collision.

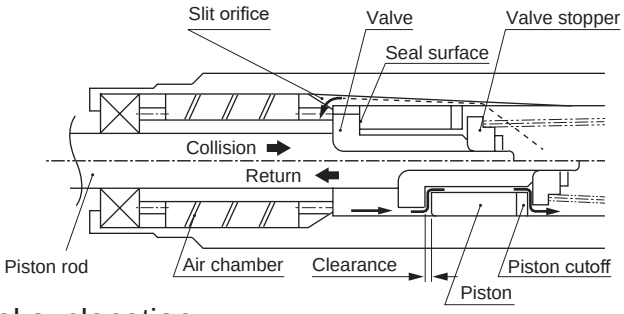

Structural explanation

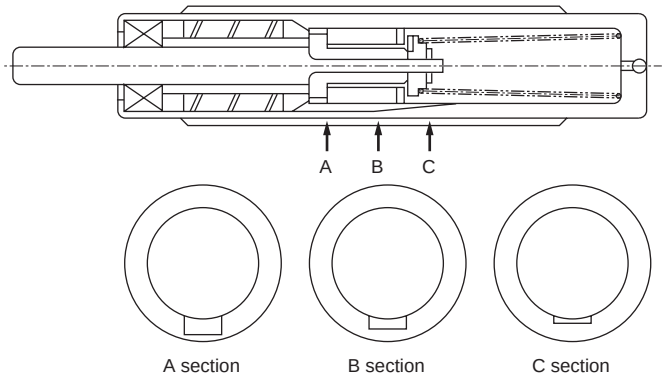

1. The slit orifice smoothly changes (decreases) as the piston moves as shown above.
This structure enables an ideal "stop" when used with a hydraulic damper, but as manufacturing is difficult, it has not been integrated in other brands. CKD has handled this tough issue with linear stopping performance as shown in Fig.1.

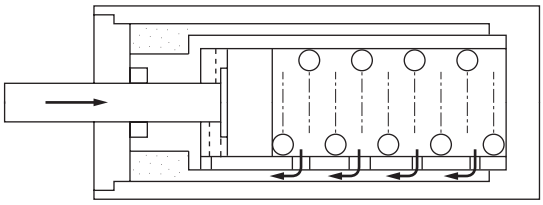

2. Generally, the dual tube shown above is used for the orifice area as a structure that changes with piston movement. Multiple small orifice holes in the inner pipe are closed as the piston moves. In this structure, performance via hole positioning precision is greatly affected, and resistance changes with each orifice, preventing smooth operation as shown in Fig. 2.

Fig. 1

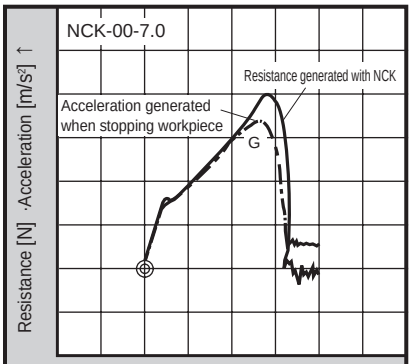

● Characteristic wave form of slit orifice integrated with NCK Series

Fig. 2

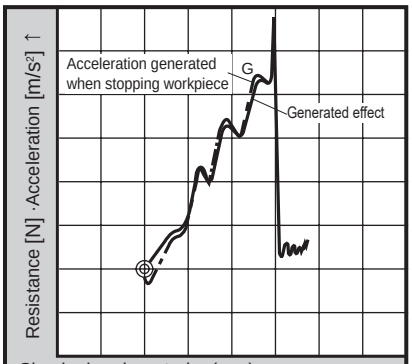

● Characteristic waveform attained with conventional porous orifice

◉: Indicates point where workpiece contacts end of shock absorber.

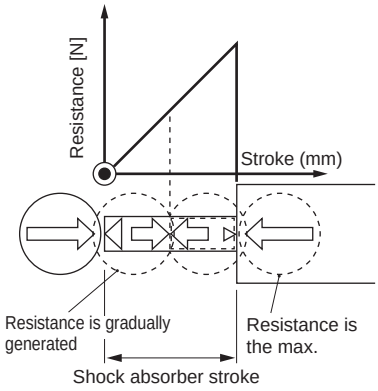

⇨ Energy in workpiece
⇦ Resistance of shock absorber

Internal structure and parts list

● Basic (without cap)

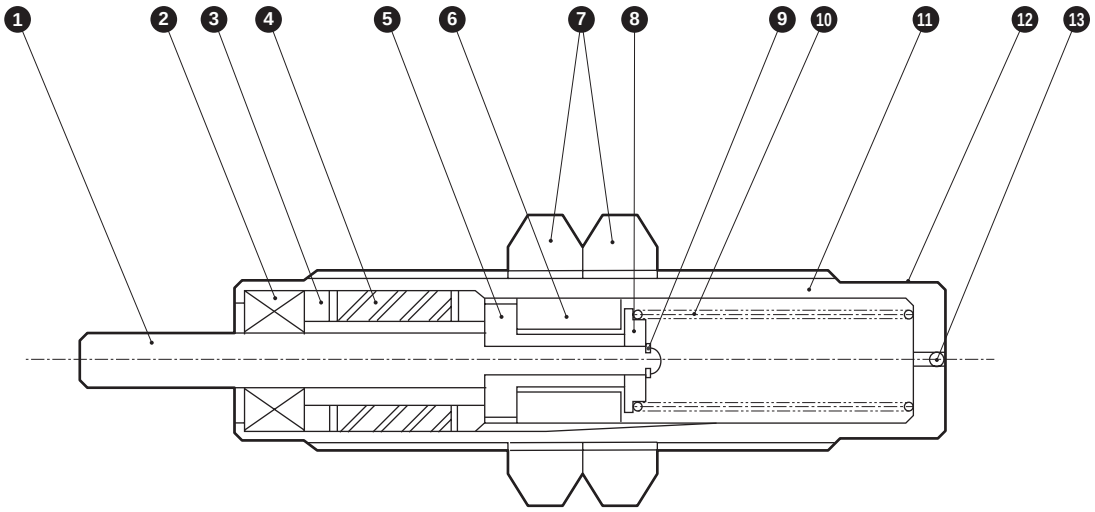

● Capped

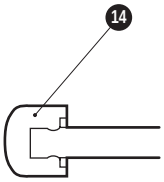

NCK-**- 0.1 / 0.3 / 0.7 / 1.2 / 2.6 -C

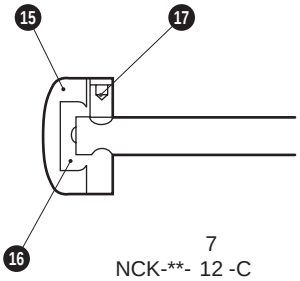

NCK-**- 7 / 12 / 20 -C

Cannot be disassembled

Parts list

No.	Part name	Material	Remarks	No.	Part name	Material	Remarks
1	Rod	Steel	Industrial chrome plating	10	Spring	Piano wire	
2	Oil seal	Special nitrile rubber		11	Damper case	Steel	Chrome plating
3	Rod guide	Copper alloy		12	Label	Polyester film	
4	Air chamber	Nitrile rubber		13	Ball	Alloy steel	
5	Valve	Steel		14	Damper cushion	Polyamide resin	Black
6	Piston	Cast iron		15	Damper cushion	Polyester resin	Black
7	Hexagon nut	Steel	Zinc plated	16	Cushion stopper	Steel	Zinc plated
8	Valve stopper	Steel		17	Hexagon socket set screw	Steel	
9	E type snap ring	Steel for spring	Zinc plated				

SCP*3
CMK2
CMA2
SCM
SCG
SCA2
SCS2
CKV2
CAV2/COVP/N2
SSD2
SSG
SSD
CAT
MDC2
MVC
SMG
MSD/MSDG
FC*
STK
SRL3
SRG3
SRM3
SRT3
MRL2
MRG2
SM-25
ShkAbs
FJ
FK
Spd Contr
Ending

Dimensions

● Standard (NCK-**-**)

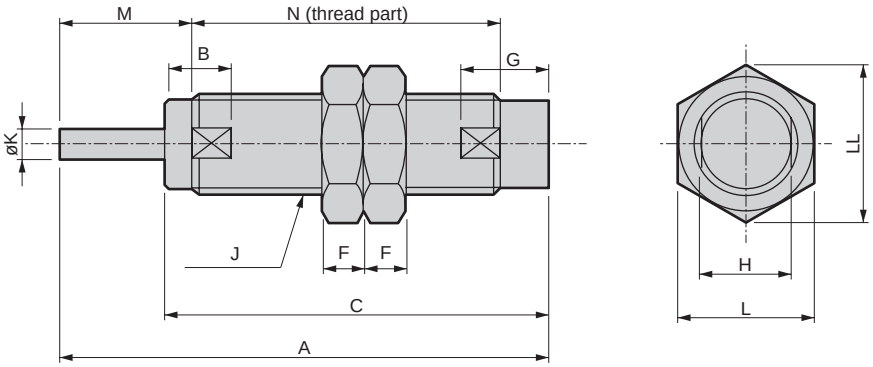

● Capped (NCK-**-**-C)

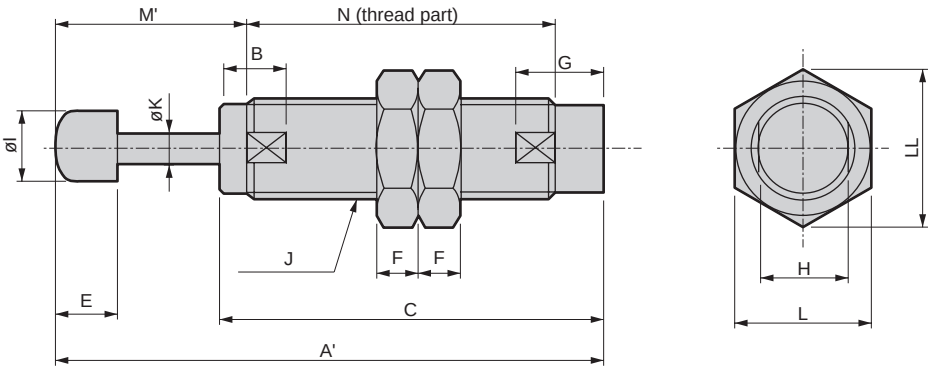

Code	Basic (00)															
Model No.	A	A'	B	C	E	F	G	H	I	J	K	L	LL	M	M'	N
NCK-00-0.1	34.5	40.5	4	29.5	6	4	7.5	7	6	M8x0.75	2.8	12	13.9	6	12	23
NCK-00-0.3	45.5	51.5	7.5	39	6	4	8	7	6	M8x0.75	2.8	12	13.9	11	16.5	29.0
NCK-00-0.7	50	57	7.5	41.5	7	4	9	9	8	M10x1.0	3	14	16.2	13	20	31
NCK-00-1.2	57.5	65	8.5	47	7.5	5	11	11	10	M12x1.0	3.5	17	19.6	15	22.5	35.5
NCK-00-2.6	86	96	10.5	70.5	10	5.5	14	13	12	M14x1.5	5	19	21.9	20	30	58
NCK-00-7	98.5	109.5	12.5	78	11	8	18	19	16	M20x1.5	6	27	31.2	25	36	63.5
NCK-00-12	129	142	15.5	103.5	13	10	23	24	22	M25x1.5	8	32	37	30	43	87
NCK-00-20	141	154	15.5	110.5	13	10	25	24	22	M27x1.5	8	32	37	35	48	92

Dimensions: Option [flange (mounting bracket)]

● NCK-0.1 / 0.3 / 0.7 / 1.2 -**

Flange (FA)
Material: Steel

Stop nut (N1)
Material: Steel

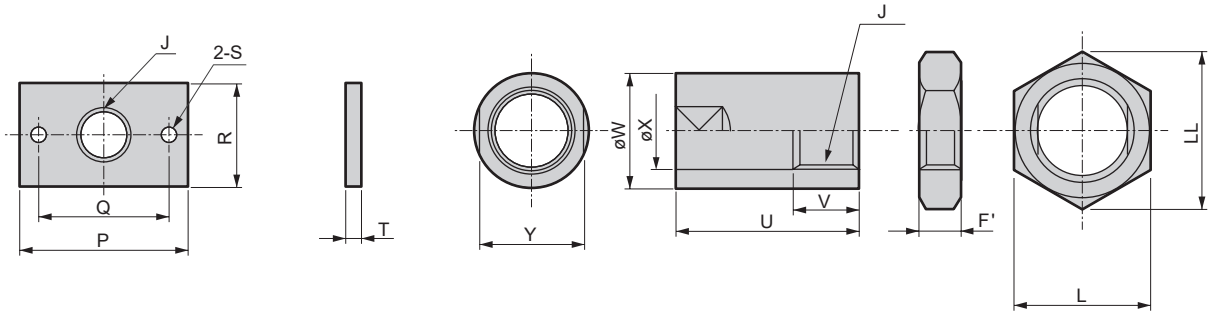

● NCK-2.6 / 7 / 12 / 20 -**

Flange (FA)
Material: Steel

Stop nut (N1)
Material: Steel

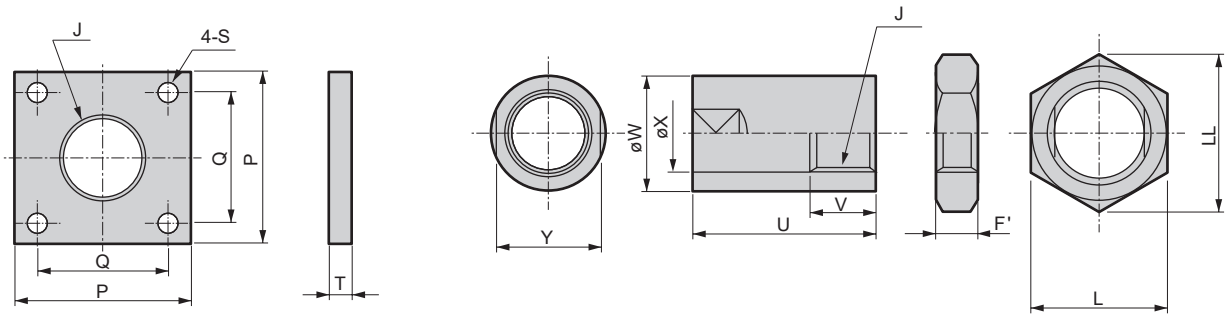

Code / Model No.	Flange (FA) J	P	Q	R	S	T	Weight (g)	Stop nut (N1) F'	J	U	V	W	X	Y	Weight (g)
NCK-0.1-**	M8x0.75	42	30	20	5.5	2.3	14	4	M8x0.75	15	8	14	9	12	13
NCK-0.3-**	M8x0.75	42	30	20	5.5	2.3	14	4	M8x0.75	15	8	14	9	12	13
NCK-0.7-**	M10x1.0	42	30	20	5.5	2.3	14	4	M10x1.0	17	10	15	11	13	15
NCK-1.2-**	M12x1.0	46	34	20	5.5	3.6	22	5	M12x1.0	23	10	19	13	17	34
NCK-2.6-**	M14x1.5	52	38	-	6.5	6	115	5.5	M14x1.5	26.5	10	20	15	17	37
NCK-7-**	M20x1.5	52	38	-	6.5	6	108	8	M20x1.5	36.5	15	26	21	24	77
NCK-12-**	M25x1.5	52	38	-	6.5	6	100	10	M25x1.5	35	15	32	26	30	112
NCK-20-**	M27x1.5	52	38	-	6.5	6	100	10	M27x1.5	45.5	15	35	28	32	155

Shock absorber selection guide (1)

1 Clarify the colliding pattern of the device

Horizontal motion
- a. Simple horizontal collision
- b. Collision with cylinder thrust
- c Collision with drive force of motor

Vertical motion
- d. Collision due to free fall
- e. Collision with cylinder thrust (downward)
- f. Collision with cylinder thrust (upward)

Slope motion
- g. Collision due to free sliding
- h. Collision with cylinder thrust (downward)
- i. Collision with cylinder thrust (upward)

Oscillation/ rotation motion
- j. Collision due to free oscillating fall
- k. Colliding with torque of motor, etc., (oscillation)
- l. Colliding with torque of motor, etc., (rotation)

Note:Refer to "Example of colliding pattern".

2 Make required conditions/descriptions clear to calculate energy

E = all absorbed energy (J)
E_1 = kinetic energy (J)
E_2 = thrust/self-weight energy (J)

L = colliding object travel distance (m) (Slope free fall)
R = distance from center of rotation to colliding point (m)
r = distance from center of rotation to center of gravity (m)
G = position of center of gravity

M = colliding weight (kg)
V = colliding speed (m/s)
S = NCK stroke (m)
F = pushing force (N)
g = gravity acceleration 9.8 m/s²
ω = angular speed (rad/s)
J = moment of inertia (kg/m²)
D = diameter (m)
N = number of rotations (rpm)
Me = equivalent weight (kg)

H = drop height (m)
T = torque (N·m)
Td = motor start torque (N·m)
K = reduction ratio
θ, α, β = tilt angle (deg)

Example of colliding pattern

	Horizontal colliding			Vertical colliding		
	a. Simple horizontal collision	b. Pushing force of cylinder applies	c. Pushing force of motor applies	d. Free fall	e. Cylinder lower limit stopper	f. Cylinder upper limit stopper
Applications	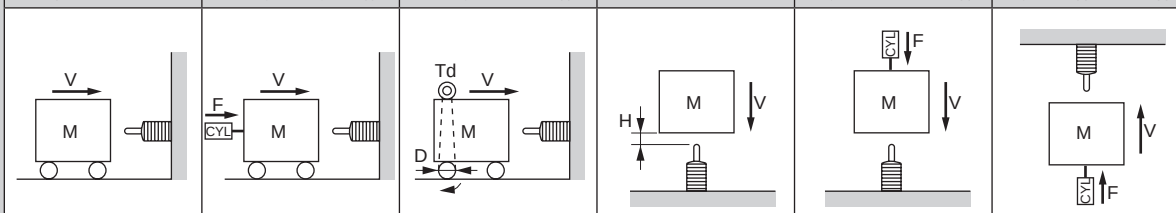					
Kinetic energy E_1(J)	$\frac{1}{2}\cdot M\cdot V^2$	$\frac{1}{2}\cdot M\cdot V^2$	$\frac{1}{2}\cdot M\cdot V^2$	$\frac{1}{2}\cdot M\cdot V^2$	$\frac{1}{2}\cdot M\cdot V^2$	$\frac{1}{2}\cdot M\cdot V^2$
Thrust/self-weight energy E_2(J)	-------	$F\cdot S$	$2\cdot\frac{K}{D}\cdot Td\cdot S$	$M\cdot g\cdot S$	$(M\cdot g+F)\cdot S$	$(F-M\cdot g)\cdot S$
All absorbed energy E (J)	$E=E_1$	$E=E_1+E_2$	$E=E_1+E_2$	$E=E_1+E_2$	$E=E_1+E_2$	$E=E_1+E_2$
Equivalent weight Me(kg)	Me=M	$Me=\frac{2\cdot E}{V^2}$	$Me=\frac{2\cdot E}{V^2}$	$Me=\frac{2\cdot E}{V^2}$ $(V=\sqrt{2\cdot g\cdot H})$	$Me=\frac{2\cdot E}{V^2}$	$Me=\frac{2\cdot E}{V^2}$

	Slope colliding			Oscillation colliding		Rotation colliding
	g. Free fall	h. Pushing force of cylinder applies	i. When thrust of cylinder is applied	j. Free fall	k. Torque of motor, etc., applies	L. Torque of motor, etc., applies
Applications	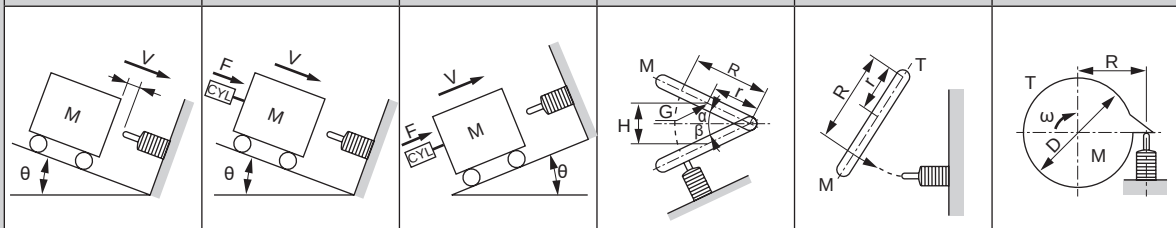					
Kinetic energy E_1(J)	$\frac{1}{2}\cdot M\cdot V^2$	$\frac{1}{2}\cdot M\cdot V^2$	$\frac{1}{2}\cdot M\cdot V^2$	$M\cdot g\cdot H$	$\frac{J\cdot\omega^2}{2}$ or $\frac{1}{2}\cdot M\cdot V^2$	$\frac{J\cdot\omega^2}{2}=\frac{M\cdot D^2\cdot\omega^2}{16}$
Thrust/self-weight energy E_2(J)	$M\cdot g\cdot S\cdot\sin\theta$	$(M\cdot g\cdot\sin\theta+F)\cdot S$	$(F-M\cdot g\cdot\sin\theta)\cdot S$	$\frac{r}{R}\cdot M\cdot g\cdot S$	$\frac{T}{R}\cdot S$	$\frac{T}{R}\cdot S$
All absorbed energy E (J)	$E=E_1+E_2$	$E=E_1+E_2$	$E=E_1+E_2$	$E=E_1+E_2$	$E=E_1+E_2$	$E=E_1+E_2$
Equivalent weight Me(kg)	$Me=\frac{2\cdot E}{V^2}$ $(V=\sqrt{2\cdot g\cdot L\cdot\sin\theta})$	$Me=\frac{2\cdot E}{V^2}$	$Me=\frac{2\cdot E}{V^2}$	$Me=\frac{2\cdot E}{V^2}$ $(V=\frac{R}{r}\sqrt{\frac{3\cdot g\cdot H}{2}})$	$Me=\frac{2\cdot E}{V^2}$ $(V=\omega\cdot R)$	$Me=\frac{2\cdot E}{V^2}$ $(V=\omega\cdot R,\ \omega=\frac{2\pi\cdot N}{60})$

3 Check shock absorber specifications range

a. Max. repeating cycle [cycle/min.] c. Ambient temperature [°C]
b. Max. colliding speed [m/s] d. Return time [s]

Note: Value of allowable energy absorption may vary depending on colliding speed. Refer to Graph 5 on page 1829.

4 Calculate actual energy per "Example of colliding pattern"

● Explanation of code

E = all absorbed energy J

E_1 = kinetic energy J

E_2 = thrust/self-weight energy J

a. Kinetic energy …… Calculate the E_1 value according to "Example of colliding pattern".

b. Thrust/self-weight energy … Calculate the value of E_2 according to "Example of colliding pattern". For S (stroke of NCK) in the formula, select a model whose max. absorbed energy exceeds E_1, and use S for that model No.

c. Total absorbed energy …… If after that the calculation result exceeds Emax (max. energy absorption), select one size larger NCK than the previously selected model No., and recalculate. If calculated E is lower than Emax selected model No., the selection is acceptable.

5 Confirm the equivalent weight

Me = Equivalent weight [kg]

Note: Equivalent weight corresponds to weight of workpiece, even for body moving with thrust, etc., if it is assumed that all of them are kinetic energy only. If only the energy formula is used, load is restricted by the equivalent weight, because the weight of workpiece will increase sharply in low speed operations.

a. Calculate value of Me according to "Example of colliding pattern".
b. Usable if Me is within Me range of selected model (calculated value of Me < specified value of Me) according to calculation of Me (catalog value) and "a" for model No. selected at 4.
c. When exceeding the Me range of the selected model at b, select an NCK one size larger, and check conditions in the same manner.

Note) Equivalent weight (Me) is listed on page 1829 (Graph 4).

6 Calculation flow chart of step 4 and 5

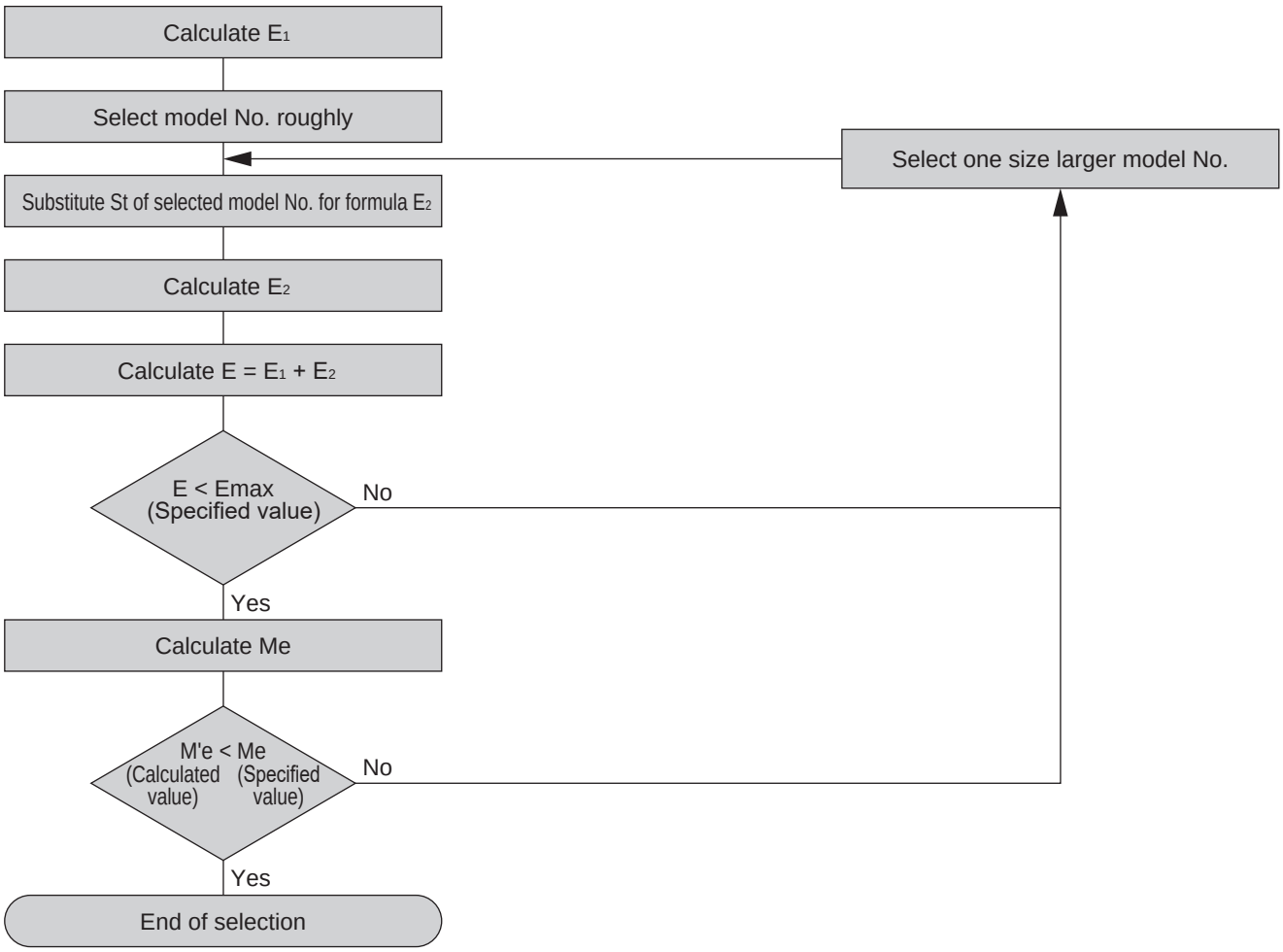

Shock absorber selection guide (2)

Shock absorber models can be selected either entirely by calculation, as in (1), or through the graph. If not required to grasp energy values, etc., during calculation, if this graph is used, proper model can be selected efficiently.

Condition of this figure: Horizontal colliding with thrust
m=50 kg, V=1.0 m/s
Cylinder bore size ø50
Supply pressure = 0.5 MPa

Energy calculation graph

●Thrust applies at the horizontal collision

[Graph 1]

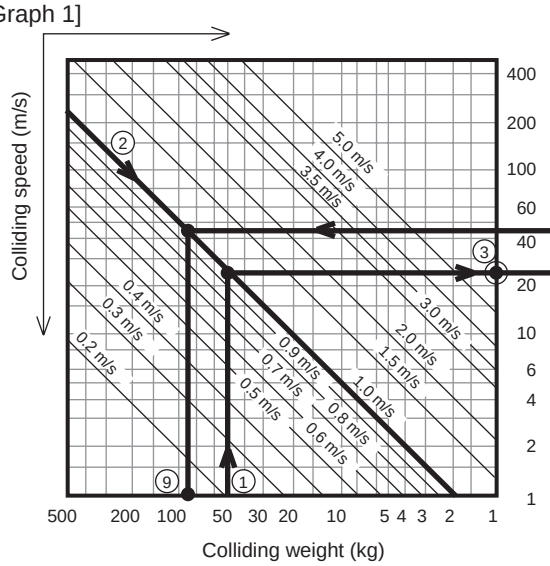

[Graph 2]

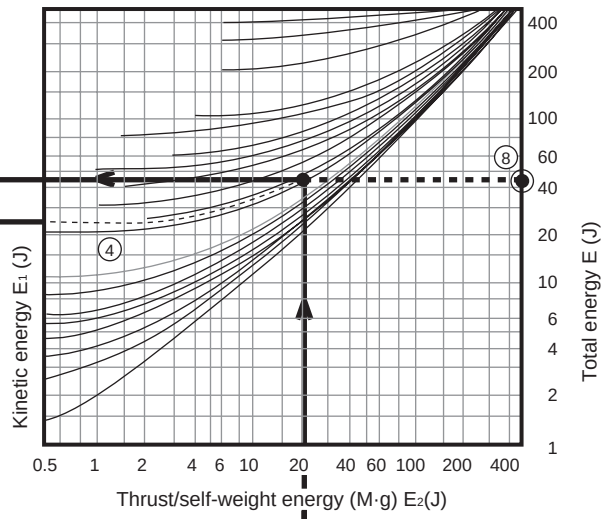

[Graph 3]

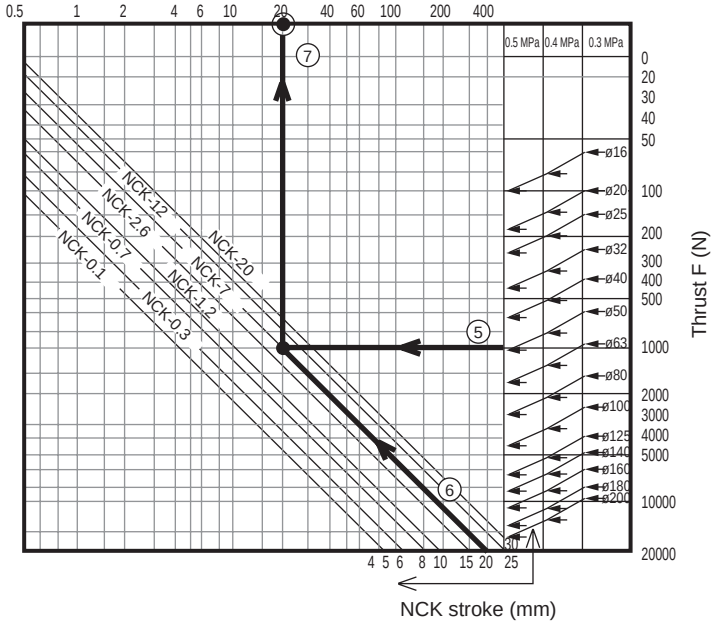

a) Determine the colliding weight M (kg)...①
b) Collision speed V (m/s) ... ②
c) Point of intersection between M and V ③ is kinetic energy E_1 (J). ... ③
d) Extend ③ to [Graph 2], and refer to the curve in the figure to draw a similar curve. (dotted line) ... ④
e) Next, if thrust applies, determine thrust F (N) (from bore and pressure of cylinder) by the right end chart of [Graph 3] ... ⑤
f) Determine model No. of NCK according to stroke and max. energy absorption. ... ⑥
(Select a model No. whose max. energy absorption exceeds E_1 calculated in step ③.)
g) The point of intersection between F and NCK model No. ⑦ shows the thrust/self-weight energy E_2 (J). ... ⑦
h) Extend point Ⓑ to [Graph 2], and point of intersection ⑧ with curve ④ shows total energy E (= E_1 + E_2) (J). ... ⑧
Here, if value E exceeds the selected NCK Emax (max. absorbed energy) at (f), select an NCK model No. one size larger again, and then find E with the same procedure.
i) Here, if "Ⓒ" and ⑧ are extended to [Graph 1], the point of intersection ⑨ with V (m/s) represents the equivalent weight Me. ... ⑨
Check that equivalent weight is within the specified value range [Graph 4].
(When Me exceeds specifications values, return to (f) and repeat the same procedures.)

Example of selection

Select shock absorber according to example.

Example Select shock absorber which stops load M smoothly under left figure conditions.

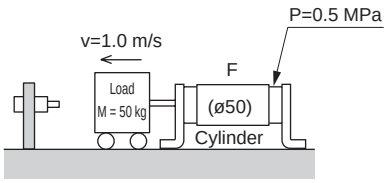

Frequency: 10 cycle/min.
(Refer to equipment indoors.)

1 The colliding pattern of the device is equivalent to "b".

2 Summarize required conditions to calculate.

a. Colliding object weight M=50 kg
b. Colliding speed V=1.0 m/s
c. Cylinder thrust $F=\pi/4 \times 50^2 mm \times 0.5$ MPa=981.7 N

3 Check specifications.

a. Frequency 10 cycles/min. ..... NG, since max. repeating cycle of NCK-20 is 9 cycle/min. [limited to models of NCK-12 and below]
b. Colliding speed 1.0 m/s..... All models are available
c. Ambient temperature:
Indoor equipment ..... All models are available
d. Return time: Not specified..... All models are available

4 Calculate actual energy.

● From pattern figure example "b"

a. Kinetic energy: $E_1 = \frac{1}{2} \cdot m \cdot V_2 = \frac{1}{2} \times 50$ (kg) x 1.0^2 (m/s) = 25 (J)
Here, since as with E_1 alone this was 25 J, NCK-2.6 [Emax = 26 J] (St = 15 mm) is provisionally selected.
b. Thrust energy: E_2 = FxS = 981.7 (N) 0.015 (m) = 14.7 (J)
c. Total absorbed energy: $E = E_1 + E_2$ = 25 (J) +14.7(J) = 39.7(J)
Recalculate with one size larger NCK-7, since this E = 39.7 (J) cannot be absorbed with the NCK-2.6 provisionally selected earlier.
b'. E_2 = FxS = 981.7 (N) 0.02 (m) = 19.6 (J)
c'. $E = E_1 + E_2$ = 25 (J) +19.6(J) = 44.6(J)
Proceed to confirmation of the colliding object equivalent weight as this E = 44.6 (J) can be absorbed by NCK-7.

5 Confirm the equivalent weight.

● From pattern figure example "b" the same as 4

a. Equivalent weight $Me = \frac{2 \cdot E}{V^2} = \frac{2 \times 44.6\ [J]}{1.0^2\ [m/s]} = 89.2$ kg
b. NCK-7 Me is 150 (kg), larger than the calculated equivalent weight. Therefore, use NCK-7 under these conditions.

Rush speed characteristics graph of equivalent weight/absorbed energy

(Graph 5)

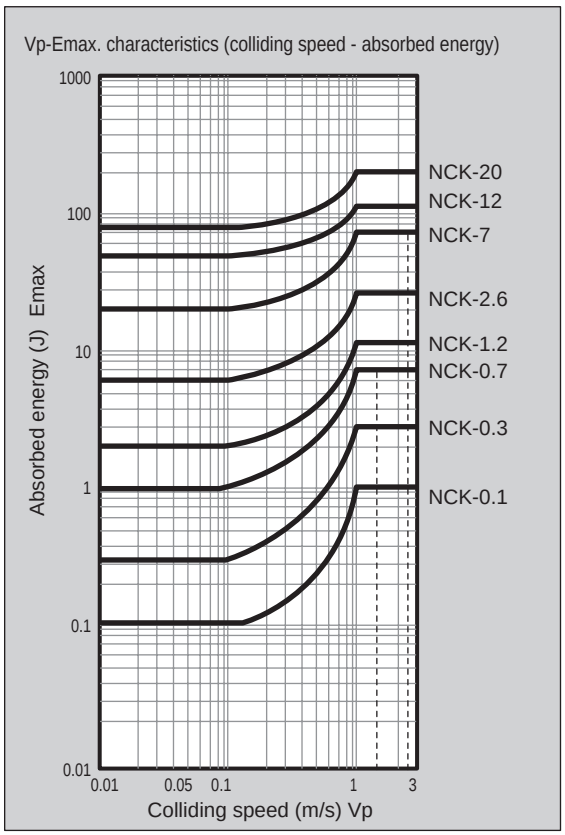

(Graph 4)

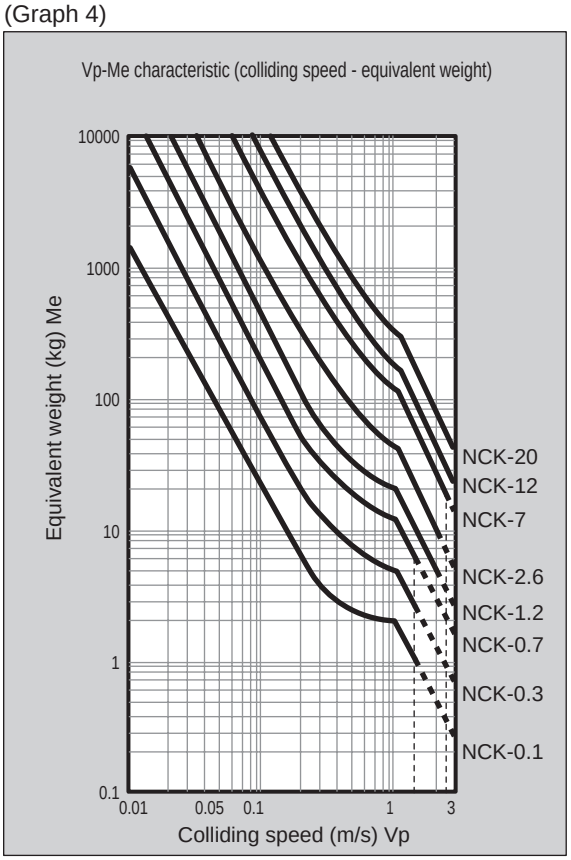

SCK

Shock absorber/adjustable

Related products

Overview

Impact force absorption with original mechanism. This adjustable shock absorber increases service life and production efficiency of facilities and equipment.
Compared to the NCK, the SCK shock absorber is the ideal buffering device for stopping a workpiece that moves or free-falls at high speeds.

Features

Safely stops the movable object.
Production cycle is increased.
Life of machinery is extended.
Noise levels are reduced, improving the environment of mechanical facilities.
Mechanical failure can be prevented.

CONTENTS

Series variation	1809
● SCK (max. absorbed energy 0.049 to 588J)	1832
Applications	1837
Selection guide	1838
⚠ Safety precautions	1859

Shock absorber

SCK Series

● Max. energy absorption: 0.049 to 588J

RoHS CAD

Specifications

Item	SCK																
Series	0.005	0.01	0.03	0.3	0.6	1.2	2.6	6.5	8	12	20	30	40	60	0.25 M	0.5 M	1.0 M
Type/Classification	Spring return without adjuster			Spring return with adjuster											Spring return with adjuster (thread pitch: large)		
Max. energy absorption J	0.049	0.098	0.294	2.94	5.88	11.8	25.5	63.7	78.4	118	196	294	392	588	3.43	11.8	74.5
O.D. thread size mm	M10x1.0	M12x1.0	M16x1.0	M20x1.0		M25x1.5		M30x1.5		M40x1.5				M45x1.5	M14x1.5	M20x1.5	M27x3.0
Stroke mm	7	10				15		25			40	60	70		10	15	30
Max. absorbed energy per hour kJ/hr	0.135	0.27	0.98	8.1	10.8	21.6	39	78	86.4		108	126	120	144	9.2	21.2	80.5
Max. colliding speed m/s	1.0				1.5	2.0		2.5		3.0				4.0	1.0	2.0	2.5
Max. operating frequency Cycle/min.	45				30		25	20	18	12	9	7	5	4	45	30	18
Ambient temperature °C	-10 (14°F) to 80 (176°F)																
Max. load (resistance) N	39	59	147	540	1000	1400	3100	4600	5700	8600	9000		10000	15000	630	1440	4560
Return time S	0.3 or less			0.4 or less				0.5 or less			0.6 or less				0.4 or less		0.5 or less
Weight kg	0.02	0.04	0.07	0.2		0.32		0.63		1.17	1.25	1.39	1.45	2.05	0.05	0.13	0.39
Return Spring force When extended N	1.2	2.0	5.9	5.9		6.9		12.0		20.0				29.0	3.9	5.5	7.6
Return Spring force When compressed N	2.6	5.0	10.5	11.3		17.2		30.0		39.0	51.0	68.0	75.0	84.0	8.4	11.5	21.0
Copper and PTFE free specifications	—			Standard													

Note: Min. absorbed energy should be 1/5 of max. absorbed energy.

How to order

SCK - 00 - 0.3 - N1

Ⓐ Mounting

Ⓑ Series

Ⓒ Option

Code	Description
Ⓐ Mounting	
00	Basic
FA	Flange
Ⓑ Series (max. energy absorption)	
0.005	0.049 J
0.01	0.098 J
0.03	0.294 J
0.3	2.94 J
0.6	5.88 J
1.2	11.8 J
2.6	25.5 J
6.5	63.7 J
8	78.4 J
12	118 J
20	196 J
30	294 J
40	392 J
60	588 J
0.25 M	3.43 J
0.5 M	11.8 J
1.0 M	74.5 J
Ⓒ Option	
Blank	Standard
N1	With stop nut

⚠ Precautions for model No. selection

*1 : 3 hexagon nuts are provided for N1 specifications products.

[Example of model No.]

SCK-00-0.3-N1

Model: Shock absorber

Ⓐ Mounting : Basic

Ⓑ Series : Max. energy absorption 2.94 J

Ⓒ Option : With stop nut

How to order options

● Flange bracket (1 pc.)

SCK - 0.01 - FA

Ⓑ → Series

● Stop nut + hexagon nut (each 1 pc.)

SCK - 0.01 - N1

Ⓑ → Series

● Hexagon nut (1 pc.)

SCK - 0.01 - NT

Ⓑ → Series

Shock absorber and other buffers

As shown at right:

- The spring accumulates energy and functions as spring return force at the stroke end.
- Cylinder cushion (single orifice connected to hydraulic cylinder) increases resistance sharply at collision and does not decelerate smoothly.
- Shock absorbers without adjuster have a preset level of energy that is absorbed and so working conditions are limited (SCK-00-0.03 or below).
- Shock absorbers with adjuster have roughly constant resistance throughout the stroke, uniformly decelerating the object's speed. The curve moves in parallel vertically when adjusted, and collision energy is absorbed appropriately.

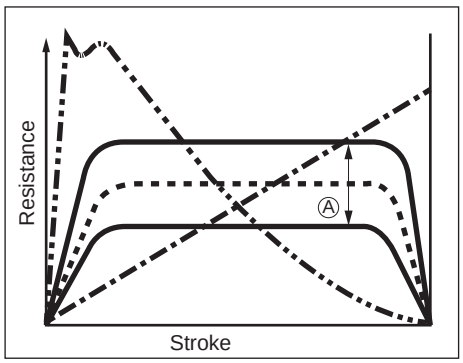

Spring
Cylinder cushion
Shock absorber without adjuster
Shock absorber
Ⓐ: The shock absorber is adjusted with the adjuster.

SCP*3
CMK2
CMA2
SCM
SCG
SCA2
SCS2
CKV2
CAV2/COVP/N2
SSD2
SSG
SSD
CAT
MDC2
MVC
SMG
MSD/MSDG
FC*
STK
SRL3
SRG3
SRM3
SRT3
MRL2
MRG2
SM-25
ShkAbs
FJ
FK
Spd Contr
Ending

Internal structure and operational explanation

● SCK-00-0.005
00-0.01
00-0.03

Cannot be disassembled

Collision

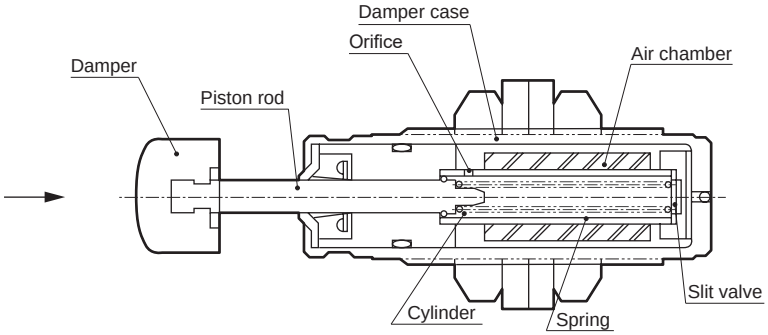

Collision

Collision force applied to the damper pushes the piston rod and pressurizes oil in the cylinder. When the generated hydraulic pressure passes through the orifice and flows into the damper case, shock is absorbed.
Oil flowing into the damper case pressurizes the air chamber and decreases air chamber volume.
Note) With this product structure, internal pressure increases with workpiece speed during collision, generating resistance and absorbing energy. Resistance may thus appear low when pushed by hand, but the product is not defective.

Return

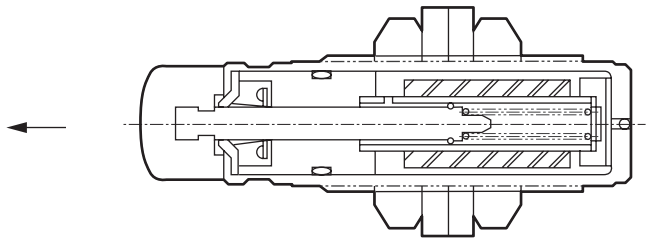

Return

When the colliding workpiece is removed, the piston rod is pushed out by the internal spring. At the same time, the slit valve (check valve) is opened by pressure in the air chamber. Oil flows to the inner pipe and at completion, the slit valve closes.

● SCK-00-0.3 to 60

Cannot be disassembled

Collision

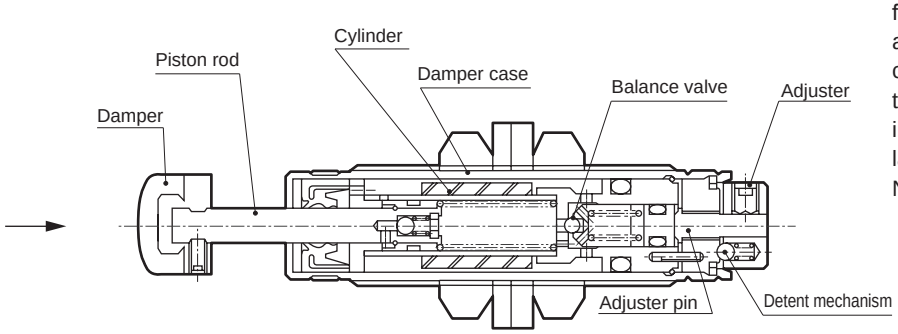

Collision

Collision force applied to the damper pushes the piston via the piston rod and pressurizes oil in the cylinder. When the generated hydraulic pressure passes through the orifice and balance valve and flows into the damper case, shock is absorbed. When the adjuster is turned clockwise, the adjustable pin moves and the force of the balance valve spring increases. Oil flow is decreased and a larger colliding force can be withstood.
Note) With this product structure, internal pressure increases with workpiece speed during collision, generating resistance and absorbing energy. Resistance may thus appear low when pushed by hand, but the product is not defective.

Return

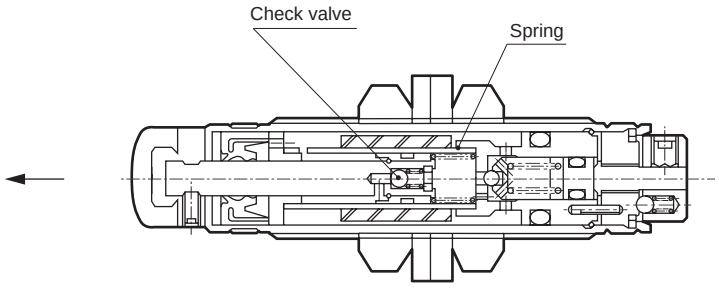

Return

When the colliding workpiece is removed, the piston rod is pushed out by the internal spring. At the same time, the check valve is opened by pressure in the air chamber. Oil flows to the inner pipe and at completion, the check valve closes.

Dimensions

● SCK-00-0.005
0.01
0.03

Basic (00)

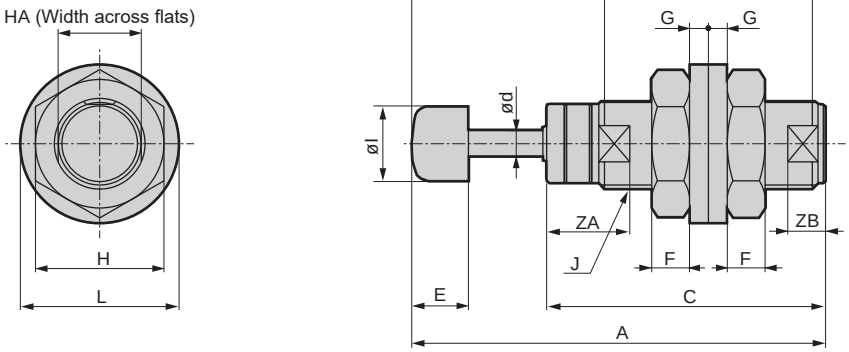

Code	Basic (00)														
Model No.	A	C	E	F	G	H	I	J	L	M	N	d	HA	ZA	ZB
SCK-00-0.005	41.5	27	7	4	2	14	8	M10x1.0	18	21.3	18.5	3.0	9	9	4
SCK-00-0.01	55	37	7.5	5	2.5	17	10	M12x1.0	21	25.5	27.5	3.5	11	11	5
SCK-00-0.03	70	49.5	10	6.5	2.5	22	14	M16x1.0	27	28.3	39.5	4.0	15	12	6

● SCK-00-0.3 to 60, 0.25 M to 1.0 M
(Screw pitch large)

Basic (00)

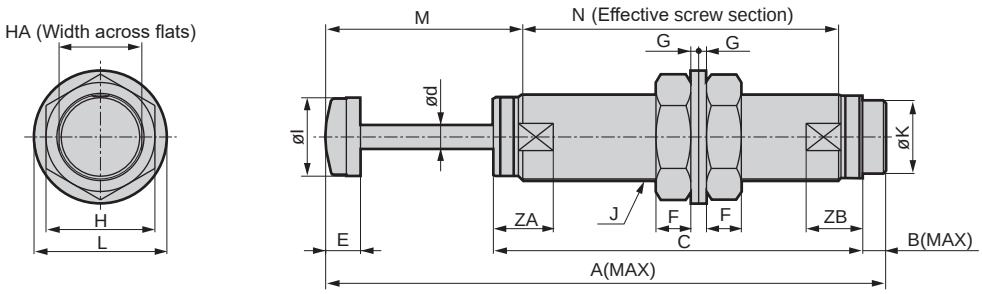

Code	Basic (00)																
Model No.	A	B	C	E	F	G	H	I	J	K	L	M	N	d	HA	ZA	ZB
SCK-00-0.3	94.6	5.8	66.8	11	8	2.9	27	16	M20x1.0	13.5	33	33.5	45.7	5	17	17.5	16
SCK-00-0.6	94.6	5.8	66.8	11	8	2.9	27	16	M20x1.0	13.5	33	33.5	45.7	5	17	17.5	16
SCK-00-1.2	122.5	7.5	86	13	10	2.9	32	22	M25x1.5	19.5	39	40.5	65.4	6	24	21	18
SCK-00-2.6	122.5	7.5	86	13	10	2.9	32	22	M25x1.5	19.5	39	40.5	65.4	6	24	21	18
SCK-00-6.5	157.4	7.9	109.5	14	12	3.6	41	27	M30x1.5	23.5	50	51.5	89.4	8	27	21.5	19.5
SCK-00-8	157.4	7.9	109.5	14	12	3.6	41	27	M30x1.5	23.5	50	51.5	89.4	8	27	21.5	19.5
SCK-00-12	175.6	10.5	123.1	16	16	3.6	50	36	M40x1.5	33.5	61	55.5	98.5	11	38	27.5	26
SCK-00-20	205.6	10.5	138.1	16	16	3.6	50	36	M40x1.5	33.5	61	70.5	113.5	11	38	27.5	26
SCK-00-30	257.1	10.5	169.6	16	16	3.6	50	36	M40x1.5	33.5	61	90.5	145	11	38	27.5	26
SCK-00-40	277.1	10.5	179.6	16	16	3.6	50	36	M40x1.5	33.5	61	100.5	155	11	38	27.5	26
SCK-00-60	298.4	10.9	198.6	18	18	4.5	55	42	M45x1.5	37.5	67	102.9	172.5	12.5	43.5	31.5	30
SCK-00-0.25M	96.6	6.5	69.1	10	5.5	2.5	19	12	M14x1.5	10	24	26.1	53.5	4	12.4	10	15.5
SCK-00-0.5M	111.4	6.5	77.9	11	8	2.9	27	16	M20x1.5	13.5	33	33	60.8	5	17	12	17.5
SCK-00-1.0M	161.6	7.7	109.9	13	10	2.9	32	22	M27x3.0	19.5	39	50.5	90.3	6	24	15	22

SCP*3
CMK2
CMA2
SCM
SCG
SCA2
SCS2
CKV2
CAV2/ COVP/N2
SSD2
SSG
SSD
CAT
MDC2
MVC
SMG
MSD/ MSDG
FC*
STK
SRL3
SRG3
SRM3
SRT3
MRL2
MRG2
SM-25
ShkAbs
FJ
FK
Spd Contr
Ending

Dimensions: Option (flange [mounting bracket])

● SCK-0.005-**
0.01
0.03

Flange (FA)

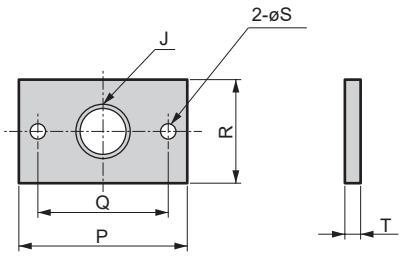

Stop nut (N1)

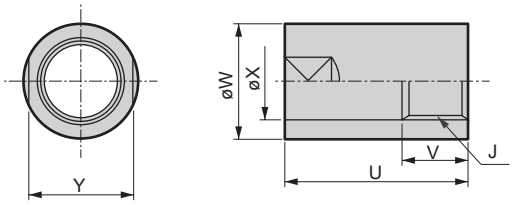

● SCK-0.3 to 60, 0.25M to 1.0M-**
(Screw pitch large)

Flange (FA)

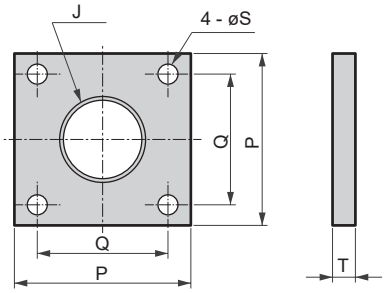

Stop nut (N1)

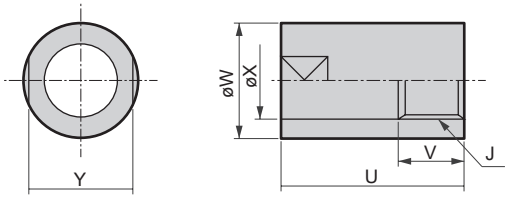

Code	Flange (FA)						Weight	Stop nut (N1)						Weight
Model No.	J	P	Q	R	S	T	(g)	J	U	V	W	X	Y	(g)
SCK-0.005-**	M 10 x 1.0	42	30	20	5.5	2.3	14	M 10 x 1.0	17	10	15	11	13	12
SCK-0.01-**	M 12 x 1.0	46	34	20	5.5	3.6	22	M 12 x 1.0	23	10	19	13	17	19
SCK-0.03-**	M 16 x 1.0	52	40	32	5.5	4.5	51	M 16 x 1.0	23	10	22	17	19	30
SCK-0.3-**	M 20 x 1.0	52	38	-	6.5	6	107	M 20 x 1.0	32.5	15	26	21	24	52
SCK-0.6-**	M 20 x 1.0	52	38	-	6.5	6	107	M 20 x 1.0	32.5	15	26	21	24	52
SCK-1.2-**	M 25 x 1.5	52	38	-	6.5	6	100	M 25 x 1.5	35	15	32	26	30	82
SCK-2.6-**	M 25 x 1.5	52	38	-	6.5	6	100	M 25 x 1.5	35	15	32	26	30	82
SCK-6.5-**	M 30 x 1.5	66	48	-	8.5	6	163	M 30 x 1.5	40	15	40	31	36	162
SCK-8-**	M 30 x 1.5	66	48	-	8.5	6	163	M 30 x 1.5	40	15	40	31	36	162
SCK-12-**	M 40 x 1.5	84	64	-	10.5	9	390	M 40 x 1.5	69.5	20	50	41	46	362
SCK-20-**	M 40 x 1.5	84	64	-	10.5	9	390	M 40 x 1.5	69.5	20	50	41	46	362
SCK-30-**	M 40 x 1.5	84	64	-	10.5	9	390	M 40 x 1.5	69.5	20	50	41	46	362
SCK-40-**	M 40 x 1.5	84	64	-	10.5	9	390	M 40 x 1.5	69.5	20	50	41	46	362
SCK-60-**	M 45 x 1.5	84	64	-	10.5	9	390	M 45 x 1.5	70	20	60	46	55	649
SCK-0.25M-**	M 14 x 1.5	52	38	-	6.5	6	115	M 14 x 1.5	26.5	10	20	15	17	30
SCK-0.5M-**	M 20 x 1.5	52	38	-	6.5	6	108	M 20 x 1.5	36.5	15	26	21	24	59
SCK-1.0M-**	M 27 x 3.0	52	38	-	6.5	6	106	M 27 x 3.0	45.5	15	35	28	32	134

Example of shock absorber

1 Special index table

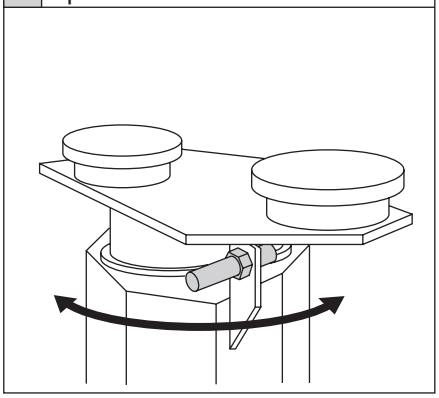

If used for special indexing tables such as wheel rim welding, etc., the index time can be reduced without damaging the machine.

2 Robot

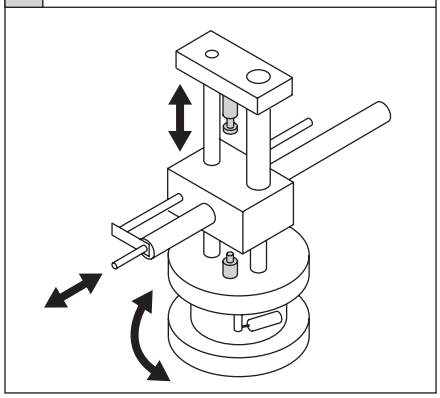

This absorbs the impact caused by the movement of various parts, and prevents damage to parts. Furthermore, production speed can be improved.

3 Switching (directional switching)

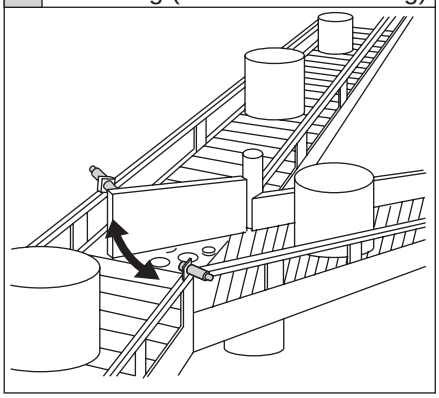

When used for defective parts inspection and sorting for shipping, this mechanism absorbs the gate bound impact and prevents damage to pneumatic cylinders, etc.

4 Rollover

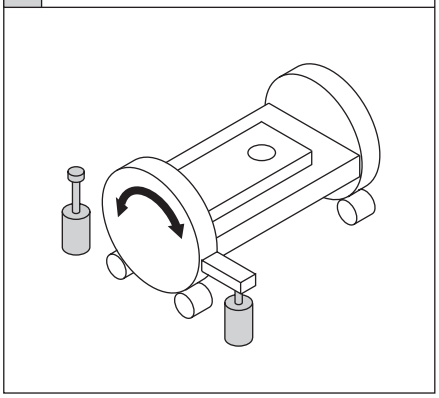

Can be used for automatic turn-over mechanism for parts after machining and welding, etc. Reduces wear and extends the service life of driving parts such as the drive, gears, pinion, etc.

5 Press supply

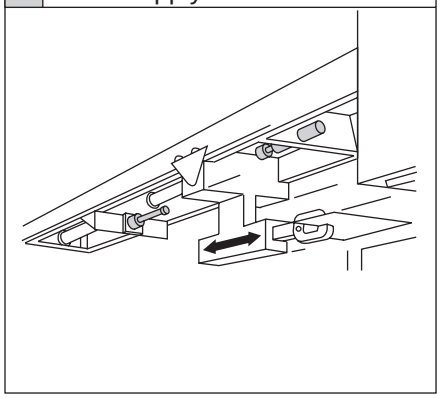

Can be used with feeding mechanisms for parts leading to press machine dies (molds, stamps). Without reducing the supply speed of pneumatic cylinders, etc., the deceleration effects suited for the parts can be attained.

6 Core mold

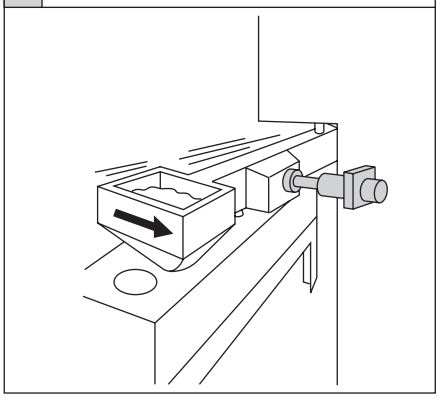

Can be used to stop the swing arm in the process that injects sand model material. This also increases cycles per unit time and supports increases in production.

SCP*3
CMK2
CMA2
SCM
SCG
SCA2
SCS2
CKV2
CAV2/COVP/N2
SSD2
SSG
SSD
CAT
MDC2
MVC
SMG
MSD/MSDG
FC*
STK
SRL3
SRG3
SRM3
SRT3
MRL2
MRG2
SM-25
ShkAbs
FJ
FK
Spd Contr
Ending

Selection guide

Setting working conditions

Make the following conditions clear for shock absorber selection.
(1) Load weight (kg)
(2) Instantaneous colliding speed of impact with shock absorber(m/s)
(3) Thrust (kgf) if there is external pressure with load

Code

D = Cylinder diameter (mm)
E = Kinetic energy (J)
P = Operation pressure (MPa)
K = Radius of rotation (m) (distance of load center to center of rotation)
ω = Colliding angular speed (rad/s)
I = Moment of inertia (kg/m^2)
F = Thrust (N)
T = Torque (N·m)
V = Colliding speed (m/s)
H = Height (m)
St = Shock absorber stroke (m)
M = Weight of workpiece (kg)
g = Gravity acceleration 9.8 m/s^2

Example of calculation

(1) Vertical falling motion (free fall)

$$E = \frac{1}{2}\cdot M\cdot V^2 + Mg\cdot St$$

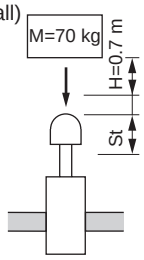

Where weight (M) of workpiece is 70 kg and vertical fall is from 0.7 m (H), check if SCK-00-60 can be used.

Find the max. colliding speed under these conditions.

$V=\sqrt{2\cdot g\cdot H}=\sqrt{19.6 \times H}$

$V=\sqrt{19.6 \times 0.7} = 3.7$ m/s < 4 m/s

(SCK-00-60)

$E=\frac{1}{2}\times 70\times 3.7^2+70\times 9.8\times 0.07=527.2$

Absorbed energy of SCK-00-60 is larger according to colliding speed characteristics graph of absorbed energy on Graph 1. Therefore, energy can be absorbed by SCK-00-60.

(2) Horizontal motion (inertia motion)

$$E = \frac{1}{2}\cdot M\cdot V^2$$

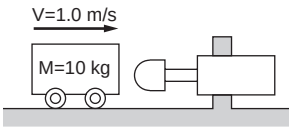

With workpiece weight (M) of 10 kg for colliding speed (V)
At 1.0m/s,

$E = \frac{1}{2} \times 10 \times (1.0)^2 = 5.0$J

SCK-00-1.2 can be used.

(3) Horizontal motion (for thrust)

$$E = \frac{1}{2}\cdot M\cdot V^2 + F\cdot St$$

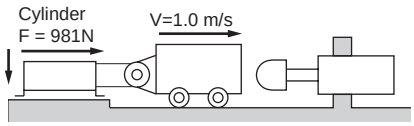

If the workpiece calculated in (2) is moved by a ø50 mm pneumatic cylinder (D)with pneumatic pressure (P) of 0.5 MPa, pneumatic cylinder thrust is:

$F = \frac{\pi}{4} \times D^2 \times P = \frac{\pi}{4} \times 50^2 \times 0.5 = 981$N

Check if SCK-00-6.5 can be used.$E=\frac{1}{2}\times 10\times(1.0)^2+981\times 0.025$

≈29.5

Therefore, energy can be absorbed by SCK-00-6.5.

(4) Tilted falling motion

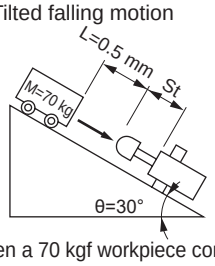

$E=(\frac{1}{2}MV^2)+(Mg\cdot St\cdot \sin\theta)$

When a 70 kgf workpiece comes down a 30° slope, consider if the SCK-00-40 can be used. Find the max. colliding speed under the same conditions.

$V=\sqrt{19.6\times H}$ (H=0.5xsin30°)

$=\sqrt{19.6\times 0.5\times \sin 30°}$

= 2.2 m/s < 3 m/s

$E=(\frac{1}{2}\times 70\times 2.2^2)+(70\times 9.8\times 0.07\times \sin 30°)$

≈193.4 J

Therefore, energy can be absorbed by SCK-00-20.

(5) Horizontal rotary motion (inertia motion)

$$I=WK^2$$
$$E=\frac{I\cdot\omega^2}{2}$$

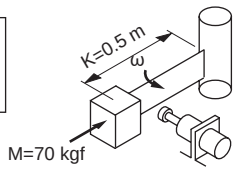

When a 70 kgf workpiece with a radius of rotation (K) 0.5 m and colliding angular speed of 1 rad/s is being operated, consider if the SCK-00-1.2 can be used.I =

$70 \times (0.5)^2 = 17.5$ kg·m^2

$E=\frac{(1)^2}{2}=\frac{17.5\times(1)^2}{2}$

=8.8 J

Therefore, energy can be absorbed by SCK-00-1.2.

(Graph 1)

Vp·E max. characteristics (colliding speed/absorbed energy)

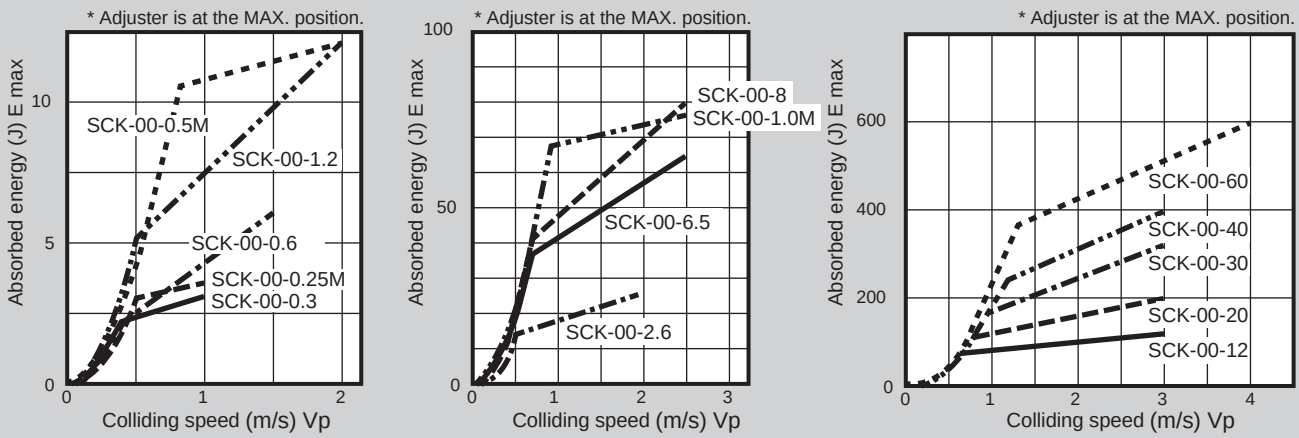

* Absorption energy drops at low speed.

FCK

Shock absorber/adjustable

Related products

Overview

An extensive product lineup of 32 types is available in three levels: low speed of 1 m/s, medium speed of 2 m/s, and high speed of 3 m/2. Shock absorbers allow selection of the ideal model.

CONTENTS

Series variation	1809
Product introduction	1840
● FCK-L low speed (max. absorbed energy 1.5 to 79.3 J)	1842
● FCK-M medium speed (max. absorbed energy 1.8 to 720 J)	1842
● FCK-H high speed (max. absorbed energy 1.8 to 720 J)	1842
Optional parts (stopper nut, deflection angle adaptor)	1848
Selection guide	1850
⚠ Safety precautions	1859

Choose from low, medium and high speeds.

Select whether to include a cap. (except for some sizes)

Three entry velocities and three types of structure

Low speed : Single hole orifice structure,
Medium speed : Porous irregular orifice structure,
High speed : Porous orifice structure
Energy absorption performance is optimized to the entry velocity.

High-efficiency threading

An externally threaded outer pipe has a large surface area and efficiently releases heat.

Industrial chrome plated piston rod

-5 to 70°C Usable

Can be used in a wide temperature range with special oil.

With rotation-stop function

A lock screw prevents incorrect adjustment during use. (Not available in some compact models)

Easy adjustment

An adjuster adjusts the impact energy absorption performance according to the impact condition.

Easy to install with external threads

External threads with nuts of M10 to M27 for low speed and M10 to M42 for medium/high speeds.
Installation and position adjustment is easy.

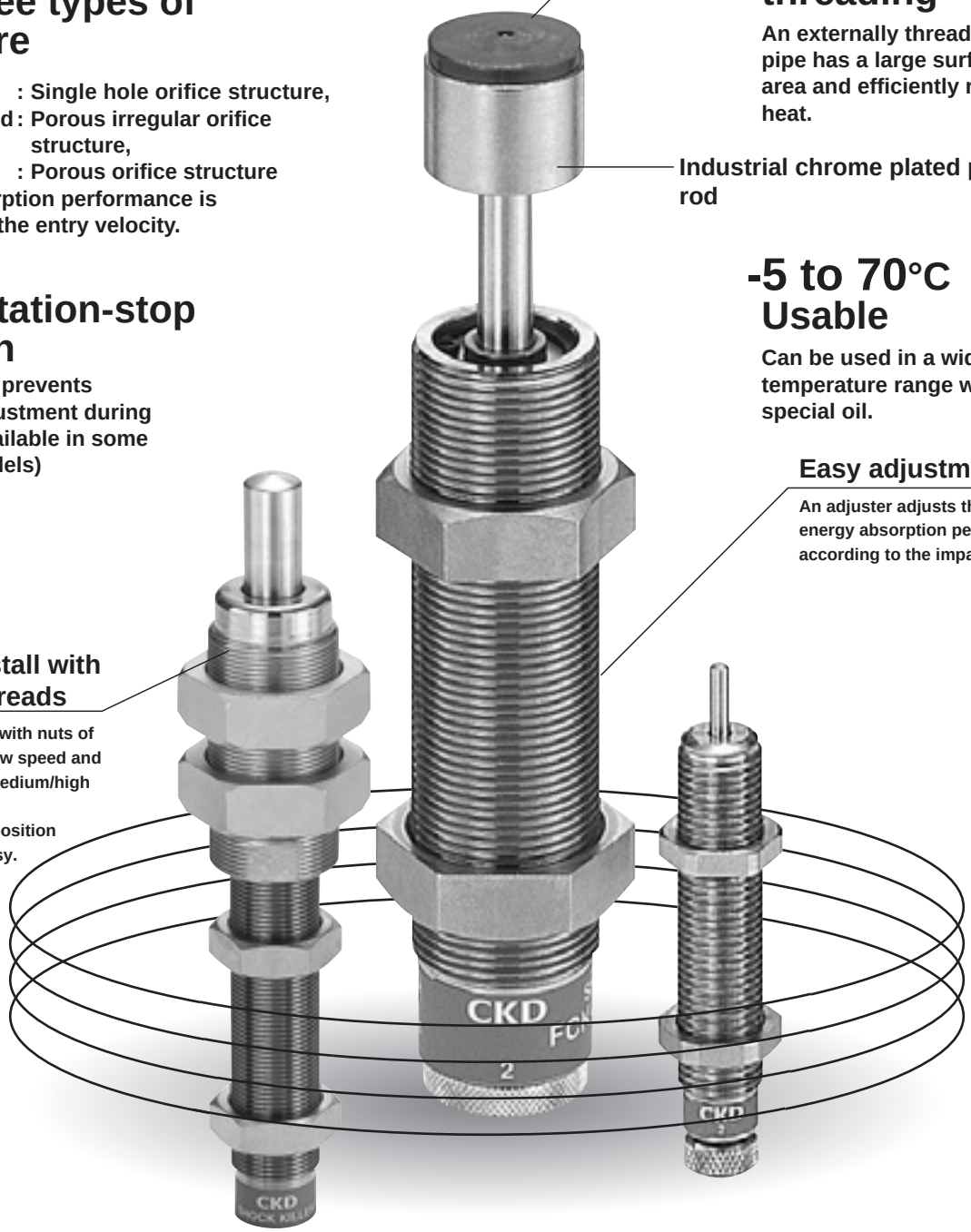

SHOCK

32 New shock absorber models in FCK Series. Optimum selection of energy absorption performance according to the impact condition and characteristics.

0.3 to 1 m/s, 8 models for low speed.

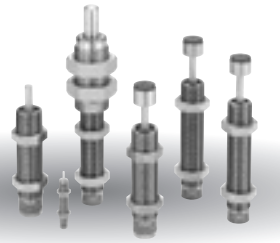

0.3 to 2 m/s, 12 models for medium speed.

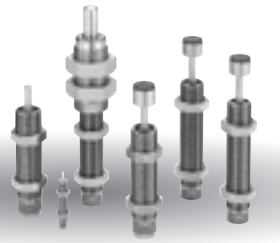

0.7 to 3 m/s, 12 models for high speed.

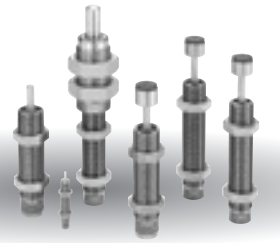

5 benefits of shock absorbers

(1) Safely stops the colliding object.
(2) Shortens the manufacturing cycle time.
(3) Improves the service life of machinery.
(4) Reduces noise and improves the environment around machinery.
(5) Prevents failure of machinery.

ABSORBER

CKD

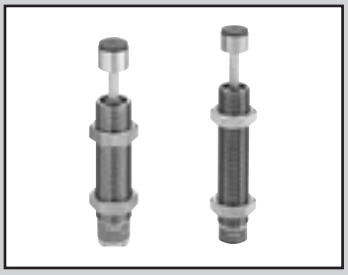

Shock absorber

FCK Series

● Max. energy absorption: 1.5 to 720 J

RoHS CAD

Specifications

Item			FCK														
Series			0.15	0.18	0.3	0.5	0.4	0.6	1	3	5	6.5	8.1	20	40	45	73.5
Type/Classification			Spring return with adjuster														
Max. energy absorption		J	1.5	1.8	2.9	4.9	3.9	5.9	9.8	29.4	49	63.7	79.3	196	392	441	720
O.D. thread size		mm	M10x1.0		M12x1.0		M14x1.5		M16x1.5	M20x1.5	M25x1.5		M27x1.5	M30x1.5	M36x1.5	M42x1.5	
Stroke		mm	8		10				12	16	30	40	25	35	50		80
Max. absorbed energy per hour		kJ/hr	3.5		5.9		8.8		14.1	20.6	29.4	38.2	32.3	70.5	141.1	164.6	264.6
Max. colliding speed	L	m/s	0.3 to 1	—	0.3 to 1	—	0.3 to 1	—	0.3 to 1					—	—	—	—
	M	m/s	—	0.3 to 2	—	0.3 to 2	—	0.3 to 2	0.3 to 2					0.3 to 2			
	H	m/s	—	0.7 to 3	—	0.7 to 3	—	0.7 to 3	0.7 to 3					0.7 to 3			
Max. operating frequency (20°C)		Cycle/min.	60											30		10	6
Ambient temperature		°C	-5 (23°F) to 70 (158°F)														
Max. load (resistance)	L	N	637		1,470		1,813		2,646	4,900			6,370	16,660	23,520	27,028	
	M	N								3,528	3,920						
	H	N															
Return time		S	0.5 or less											1 or less		2 or less	
Weight	Without cap	g	26.5		44		68		108	180	406	—	411	710	1300	—	—
	With cap	g	27		47		73		117	202	436	459	460	760	1410	1560	2010
Return spring force	When extended	N	2.9		4.9		4.5		5.4	12.0	16.6	23.8	16.2	19.6	22.5	24.5	
	When compressed	N	5.9		9.8				14.7	18.0	33.1	71.4	27.2	44.1	68.6	83.3	98.0

Operational principle

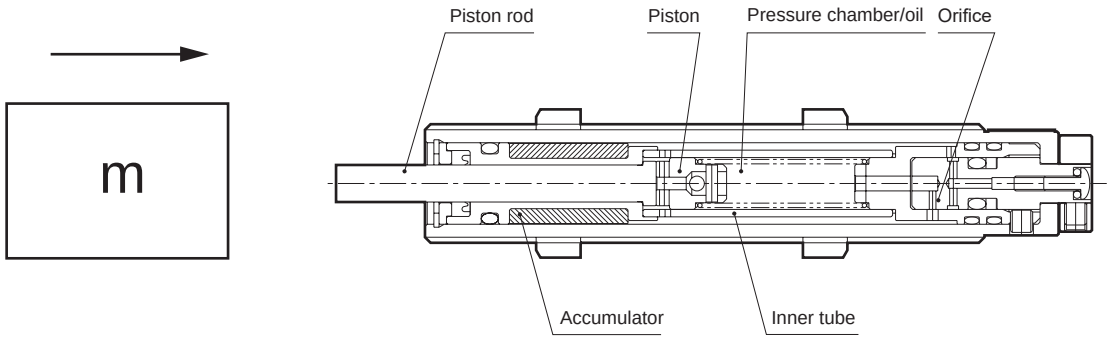

If an object collides with the piston rod, that action is transmitted to the oil in the pressure chamber enclosed by the piston and inner tube.
Oil in pressure chamber flows out from orifice provided in inner tube.
Resistance F shown by following formula occurs at that time.
$F = av^2 + bv + cx$ (v is colliding speed, and x is moving stroke. a, b, and c are constants.)

No. 1 shows the speed square resistance, which is a significant part of the resistance as a whole.
No. 2 shows the viscosity resistance, which is a significant part of the resistance if the colliding speed is low.
Item 3 shows return force of piston rod. (Can usually be ignored, as the value is miniscule compared to Items 1 and 2.)
The product of resistance generated at this time and the piston rod stroke is the shock absorber absorption energy.
The shock absorber realizes ideal impact absorption by controlling Items 1 and 2.

How to order

● Low speed

FCK-L - 0.15 - C

● Medium speed

FCK-M - 0.18 - C

● High speed

FCK-H - 0.18 - C

Ⓐ Model No.

Ⓑ Series (max. energy absorption)

Ⓒ Option
*1

Code	Description	Ⓐ Model No. Low speed FCK-L	Medium speed FCK-M	High speed FCK-H
Ⓑ Series (max. energy absorption)				
0.15	1.5 J	●		
0.18	1.8 J		●	●
0.3	2.9 J	●		
0.4	3.9 J	●		
0.5	4.9 J		●	●
0.6	5.9 J		●	●
1	9.8 J	●	●	●
3	29.4 J	●	●	●
5	49 J	●	●	●
6.5	63.7 J	●	●	●
8.1	79.3 J	●	●	●
20	196 J		●	●
40	392 J		●	●
45	441 J		●	●
73.5	720 J		●	●
Ⓒ Option				
Blank	Without cap	●	●	●
C	Capped	●	●	●

* 1: No cap is not available for 6.5 (63.7 J), 45 (441 J), 73.5 (720 J).

is not available.

[Example of model No.]

FCK-M-0.18-C

Ⓐ Model No. : Shock absorber medium speed
Ⓑ Series : Max. energy absorption 1.8 J
Ⓒ Option : Capped

Specifications for rechargeable battery (Catalog No. CC-1226A)

FCK - ··· - P4*

● Design compatible with rechargeable battery manufacturing process

* Contact CKD for details.

SCP*3
CMK2
CMA2
SCM
SCG
SCA2
SCS2
CKV2
CAV2/ COVP/N2
SSD2
SSG
SSD
CAT
MDC2
MVC
SMG
MSD/ MSDG
FC*
STK
SRL3
SRG3
SRM3
SRT3
MRL2
MRG2
SM-25
ShkAbs
FJ
FK
Spd Contr
Ending

Internal structure and parts list

● FCK-*-*

Basic (without cap)

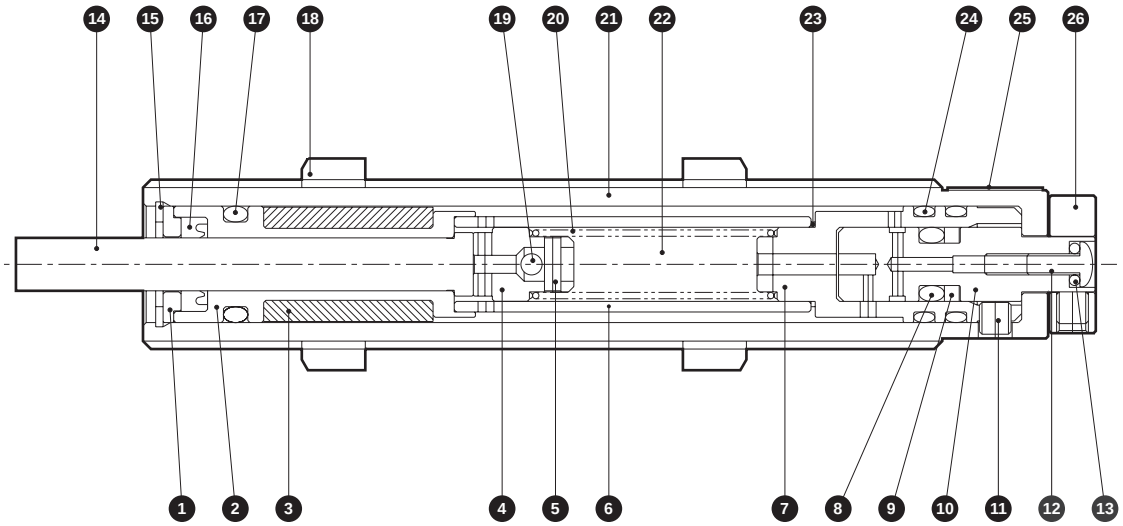

Capped

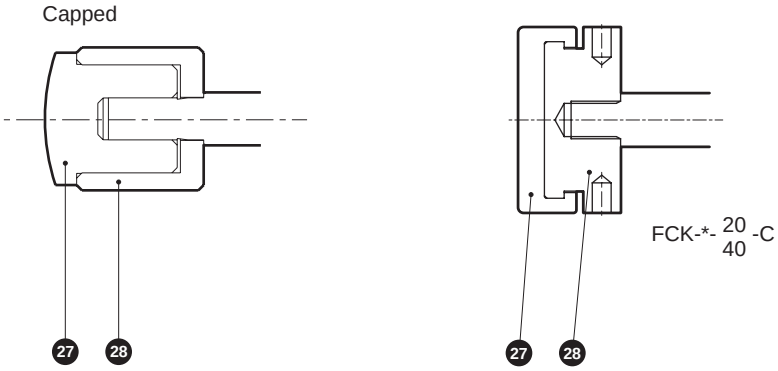

Cannot be disassembled

Parts list

No.	Part name	Material	No.	Part name	Material
1	Packing seal retainer	Copper alloy	15	Snap ring	Steel
2	Guide	Copper alloy	16	U packing	Nitrile rubber
3	Accumulator	Nitrile rubber	17	O-ring	Nitrile rubber
4	Piston	Copper alloy	18	Hexagon nut	Steel
5	Spring pin	Stainless steel	19	Steel ball	Bearing steel
6	Inner tube	Steel	20	Spring	Piano wire
7	Bottom	Copper alloy	21	Outer tube	Steel
8	O-ring	Nitrile rubber	22	Oil	Oil
9	Back up ring	Resin	23	Spacer	Nitrile rubber
10	Adjusting shaft	Copper alloy	24	O-ring	Nitrile rubber
11	Hexagon socket set screw	Alloy steel	25	Product name plate	
12	Cross-recessed set screw	Alloy steel	26	Knob	Copper alloy
13	O-ring	Nitrile rubber	27	Rod cap	Resin *2
14	Piston rod	Alloy steel	28	Reinforcement ring	Steel

*1: Structures differ to some extent by model.
*2: For sizes 20 and 40, urethane rubber is used.

Internal structure and parts list

6.5
● FCK-*- 45 -C (Capped)
73.5

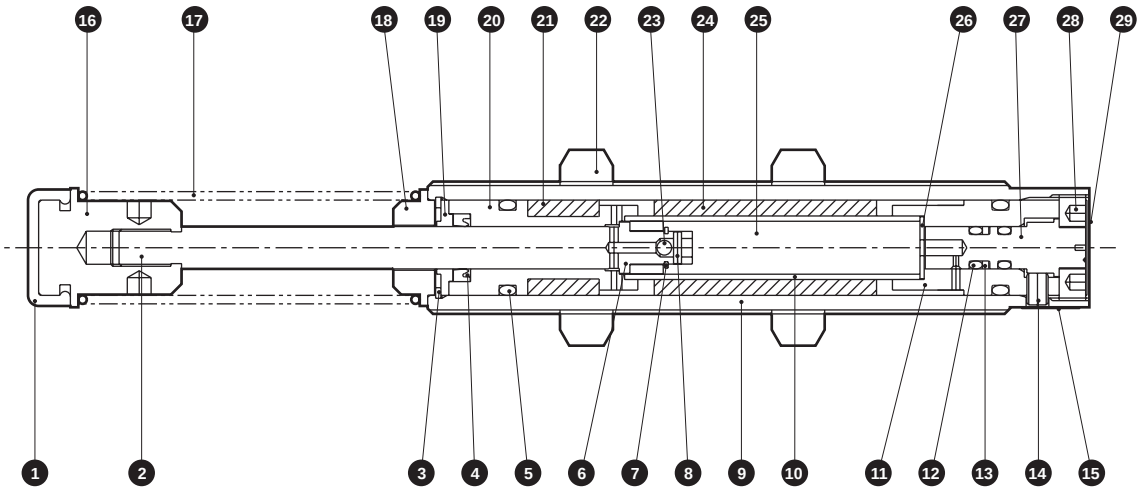

Cannot be disassembled

Parts list

No.	Part name	Material	No.	Part name	Material
1	Rod cover	Urethane rubber (*2)	16	Spring guide	Steel
2	Piston rod	Alloy steel	17	Spring	Piano wire
3	Snap ring (round R)	Steel	18	Spring guide	Steel
4	U packing	Nitrile rubber	19	Packing seal retainer	Copper alloy
5	O-ring	Nitrile rubber	20	Guide	Copper alloy
6	Piston	Copper alloy	21	Accumulator	Nitrile rubber
7	Snap ring (E)	Steel	22	Hexagon nut	Steel
8	Spring pin	Stainless steel	23	Steel ball	Bearing steel
9	Outer tube	Steel pipe	24	Accumulator	Nitrile rubber
10	Inner tube	Steel pipe	25	Oil	Oil
11	Bottom	Copper alloy	26	Washer	Steel
12	O-ring	Nitrile rubber	27	Adjusting shaft	Copper alloy
13	Back up ring	Resin	28	Holding screw	Steel
14	Hexagon socket set screw	Alloy steel	29	Label for adjustment	Steel
15	Product name plate				

*1: Structures differ to some extent by model.
*2: The rod cover (resin) cap cannot be attached to the 45 and 73.5 sizes.

SCP*3
CMK2
CMA2
SCM
SCG
SCA2
SCS2
CKV2
CAV2/COVP/N2
SSD2
SSG
SSD
CAT
MDC2
MVC
SMG
MSD/MSDG
FC*
STK
SRL3
SRG3
SRM3
SRT3
MRL2
MRG2
SM-25
ShkAbs
FJ
FK
Spd Contr
Ending

Dimensions

● Standard (FCK-*-*)

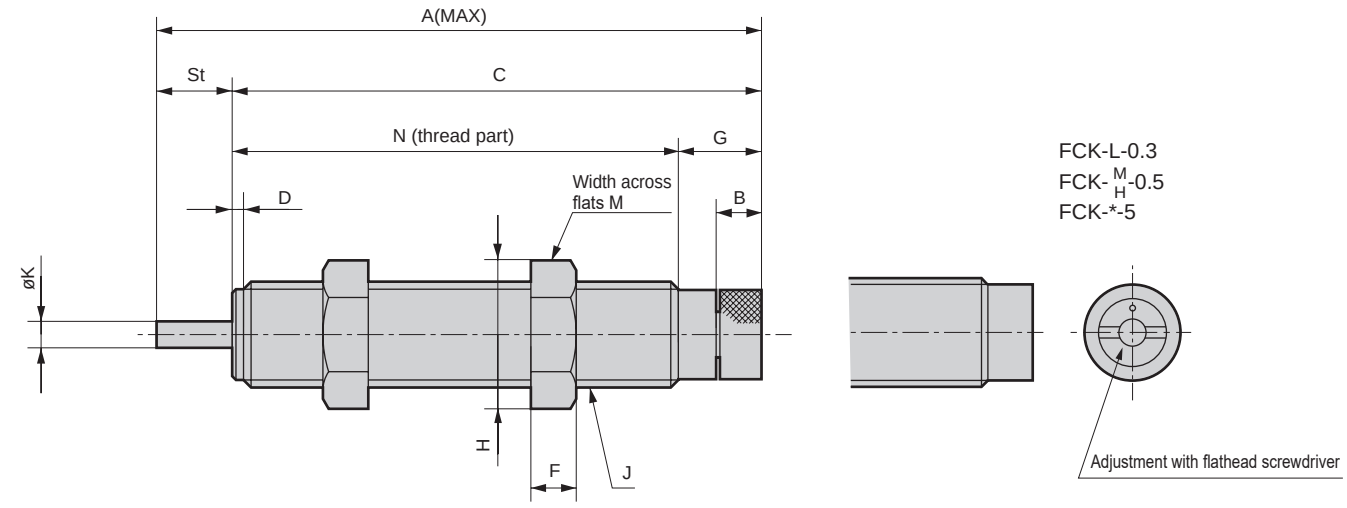

● Capped (FCK-*-*-C)

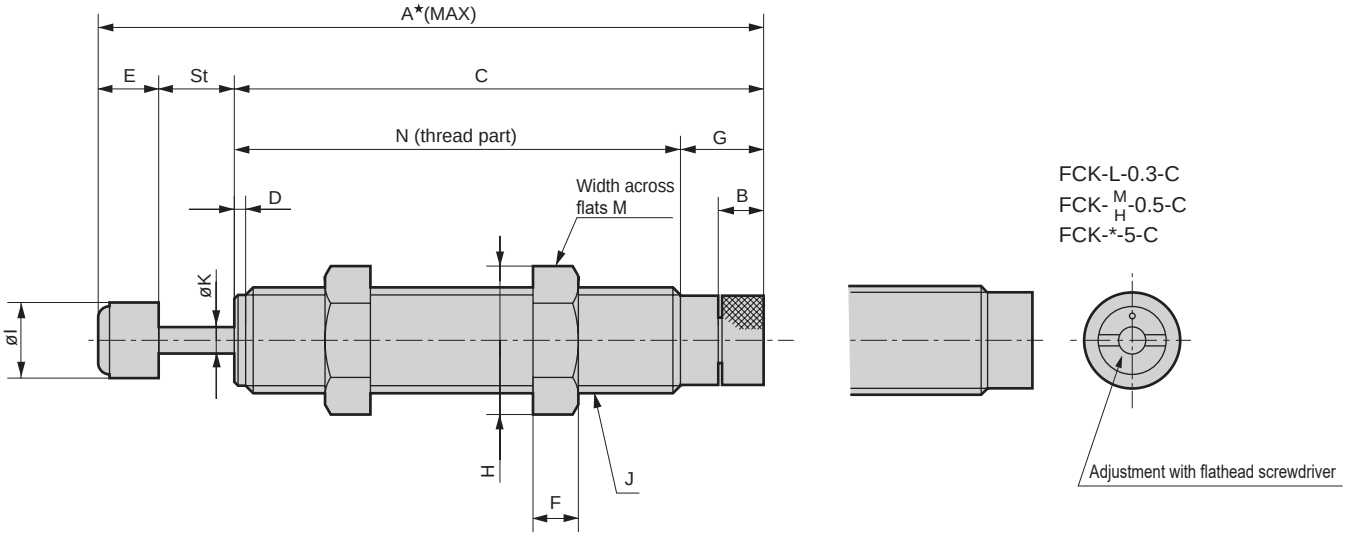

Model No.	A	A★	B	C	St	D	E	F	G	H	I	J	K	N	M
FCK-L-0.15 FCK- M/H -0.18	58.9	65.2	3.5	50.9	8	1.5	6.3	3	8.7	14.2	6	M10x1	2.4	42.2	13
FCK-L-0.3 FCK- M/H -0.5	76	84	—	66	10	1.5	8	4	5	16.2	8	M12x1	3.5	61	14
FCK-L-0.4 FCK- M/H -0.6	80	88	6	70	10	1.5	8	6	11	19.6	10	M14x1.5	3.5	59	17
FCK-*-1	102	117	4.5	90	12	—	15	6	14.5	20	13.5	M16x1.5	5	75.5	19
FCK-*-3	110	127	4	94	16	—	17	8	18	27.7	18	M20x1.5	6	76	24
FCK-*-5	155	173	—	125	30	—	18	10	15	37	22	M25x1.5	8	110	32
FCK-*-8.1	136	156	5	111	25	—	20	10	20	37	24	M27x1.5	8	91	32
FCK- M/H -20	188	206.5	5	153	35	—	18.5	14	25	41.6	27	M30x1.5	10	128	36
FCK- M/H -40	235	254.5	5	185	50	—	19.5	15	25	53.1	33	M36x1.5	12	160	46

Note: The above table * shows low speed (L), medium speed (M), and high speed (H).

Dimensions

● FCK-*- 6.5 / 45 / 73.5 -C

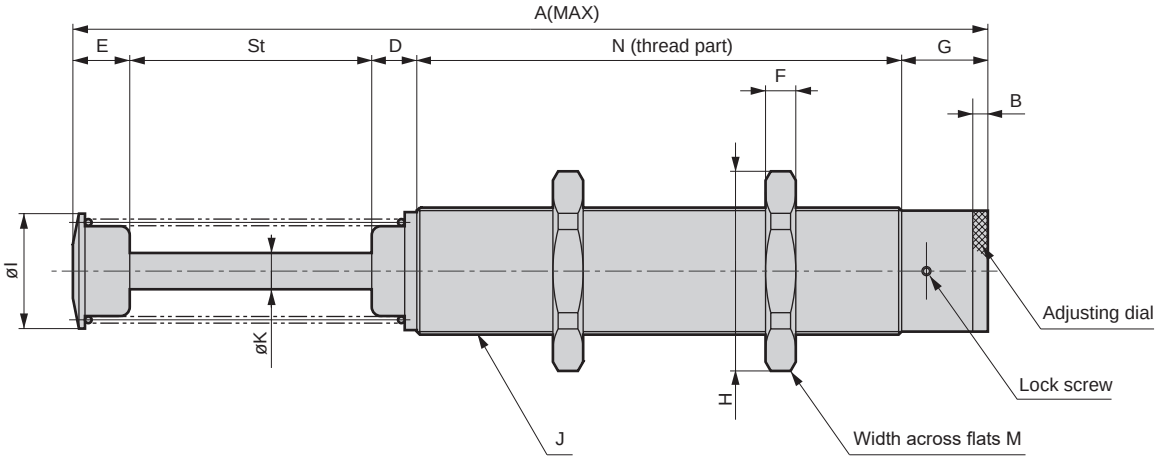

FCK-*-6.5-C
FCK- M/H -45-C

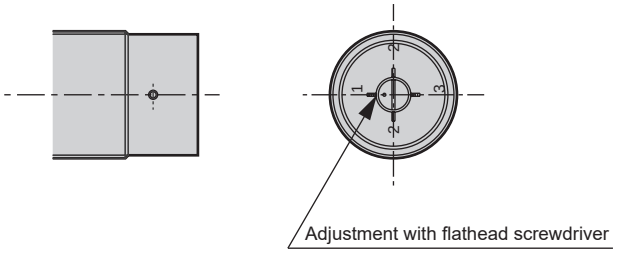

Model No.	A	B	St	D	E	F	G	H	I	J	K	N	M
FCK-*-6.5-C	200.5	-	40	6.5	29	10	15	37	22	M25x1.5	8	110	32
FCK- M/H -45-C	212.5	-	50	7	19	25	23	66	38	M42x1.5	12	113.5	60
FCK- M/H -73.5-C	302.5	5	80	15	19	25	28.5	66	38	M42x1.5	12	160	60

Note: The above table * shows low speed (L), medium speed (M), and high speed (H).

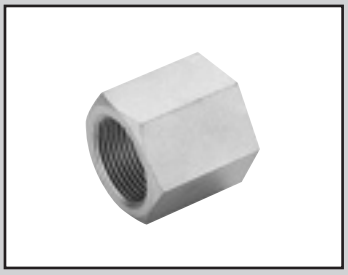

Shock absorber **FCK Series** Option parts

FCK-*-N1/FCK-*-C-N1

(Stopper nut)

Dimensions

● FCK-*-N1 (for standard)
Material: Steel

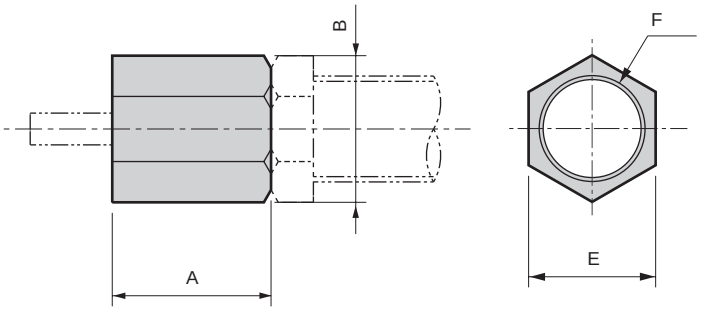

● FCK-*-C-N1 (for capped)
Material: Steel

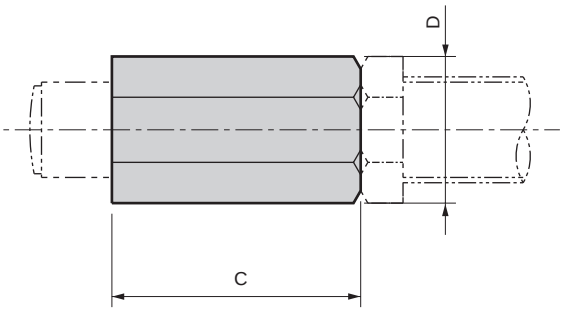

(For standard)

Model No.	Compatible model	A	B	Weight (g)
FCK-0.18-N1	FCK-L-0.15 FCK-M-0.18 FCK-H-0.18	10	15	5
FCK-0.5-N1	FCK-L-0.3 FCK-M-0.5 FCK-H-0.5	12	16.2	5
FCK-0.6-N1	FCK-L-0.4 FCK-M-0.6 FCK-H-0.6	12	19.6	9
FCK-1-N1	FCK-L-1 FCK-M-1 FCK-H-1	15	21.9	13
FCK-3-N1	FCK-L-3 FCK-M-3 FCK-H-3	30	27.7	43
FCK-5-N1	FCK-L-5 FCK-M-5 FCK-H-5	20	37	62
FCK-8.1-N1	FCK-L-8.1 FCK-M-8.1 FCK-H-8.1	35	37	86
FCK-20-N1	FCK-M-20 FCK-H-20	38	41.6	123
FCK-40-N1	FCK-M-40 FCK-H-40	45	53.1	286

(For capped type)

Model No.	Compatible model	C	D	E	F	Weight (g)
FCK-0.18-C-N1	FCK-L-0.15-C FCK-M-0.18-C FCK-H-0.18-C	16	15	13	M10x1	8
FCK-0.5-C-N1	FCK-L-0.3-C FCK-M-0.5-C FCK-H-0.5-C	16	16.2	14	M12x1	7
FCK-0.6-C-N1	FCK-L-0.4-C FCK-M-0.6-C FCK-H-0.6-C	20	19.6	17	M14x1.5	15
FCK-1-C-N1	FCK-L-1-C FCK-M-1-C FCK-H-1-C	30	21.9	19	M16x1.5	26
FCK-3-C-N1	FCK-L-3-C FCK-M-3-C FCK-H-3-C	47	27.7	24	M20x1.5	68
FCK-5-C-N1	FCK-L-5-C FCK-M-5-C FCK-H-5-C	32	37	32	M25x1.5	99
FCK-6.5-C-N1	FCK-L-6.5-C FCK-M-6.5-C FCK-H-6.5-C	50	37	32	M25x1.5	154
FCK-8.1-C-N1	FCK-L-8.1-C FCK-M-8.1-C FCK-H-8.1-C	55	37	32	M27x1.5	135
FCK-20-C-N1	FCK-M-20-C FCK-H-20-C	58	41.6	36	M30x1.5	188
FCK-40-C-N1	FCK-M-40-C FCK-H-40-C	65	53.1	46	M36x1.5	413

1 When using stopper nut, note the following points.

- For types without cap, attach the stopper nut so that it protrudes 0.1 mm to 1 mm outward along the piston rod from the shock absorber body (cylinder top).
  For capped types, attach the stopper nut so that it protrudes 0.5 mm to 1 mm plus the cap length outward along the piston rod from the shock absorber body (cylinder section).
- Fix with the standard nut for shock absorber after installing the stopper nut.
- Cannot be used with a deflection angle adaptor.

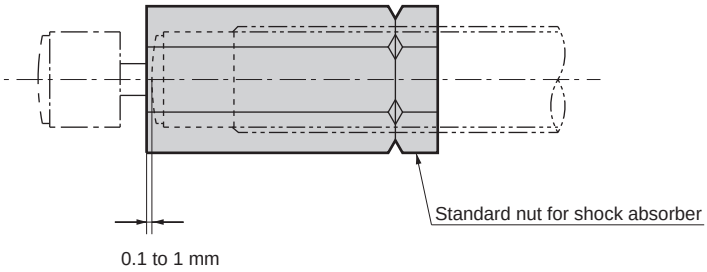

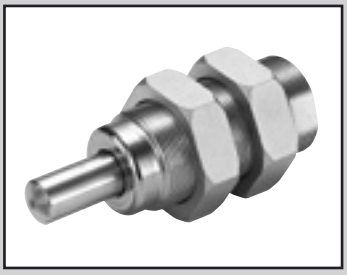

Shock absorber **FCK Series** Option parts

FCK-*-A

(Deflection angle adaptor)

RoHS CAD

Specifications

Max. working deflection angle ± 10°

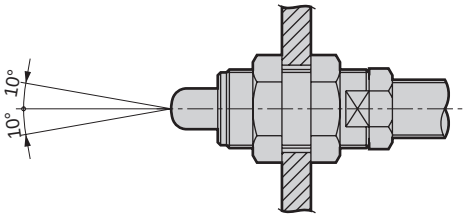

Dimensions CAD

● FCK-*-A

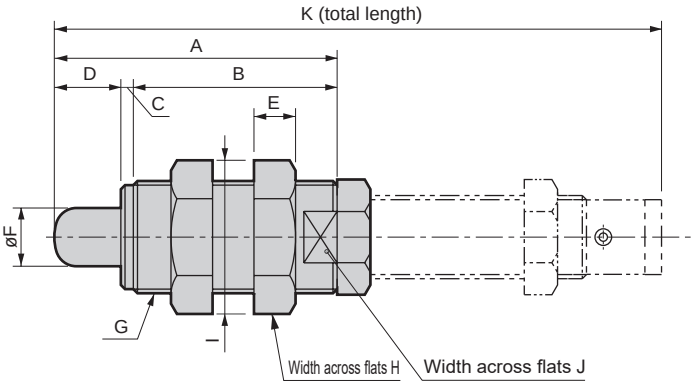

Model No.	Compatible model	A	B	C	D	E	F	G	H	I	J	K	End section material	Weight (g)
FCK-0.18-A	FCK-L-0.15 FCK-M-0.18 FCK-H-0.18	38	28	2	8	6	8	M16x1.5	19	20	13	75.7	Plastic (POM)	37
FCK-0.5-A	FCK-L-0.3 FCK-M-0.5 FCK-H-0.5	48	35	3	10	5	10	M18x1.5	21	24.3	14	97.8		49
FCK-0.6-A	FCK-L-0.4 FCK-M-0.6 FCK-H-0.6	51	38	3	10	7	11	M22x1.5	24	27.7	19	103		83
FCK-1-A	FCK-L-1 FCK-M-1 FCK-H-1	60	45	3	12	7	12	M22x1.5	24	27.7	19	129		81
FCK-3-A	FCK-L-3 FCK-M-3 FCK-H-3	68	49	3	16	10	14	M27x1.5	32	37	24	146	Iron	214
FCK-5-A	FCK-L-5 FCK-M-5 FCK-H-5	107.5	67.5	10	30	15	16	M36x1.5	46	53.1	32	212		630
FCK-8.1-A	FCK-L-8.1 FCK-M-8.1 FCK-H-8.1	97	62	10	25	15	16	M36x1.5	46	53.1	32	188		582
FCK-20-A	FCK-M-20 FCK-H-20	127	82	10	35	15	18	M40x1.5	50	57.7	36	255		838
FCK-40-A	FCK-M-40 FCK-H-40	167	107	10	50	15	20	M45x1.5	55	63.5	41	322		1265

1 When using deflection angle adaptor, note the following points.

- Keep the angle within ±10˚ of the center line of the deflection angle adaptor cap.
- Cannot be used with stopper nut.
- Cannot be used with capped.

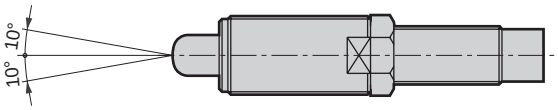

SCP*3
CMK2
CMA2
SCM
SCG
SCA2
SCS2
CKV2
CAV2/ COVP/N2
SSD2
SSG
SSD
CAT
MDC2
MVC
SMG
MSD/ MSDG
FC*
STK
SRL3
SRG3
SRM3
SRT3
MRL2
MRG2
SM-25
ShkAbs
FJ
FK
Spd Contr
Ending

Selection guide flow chart

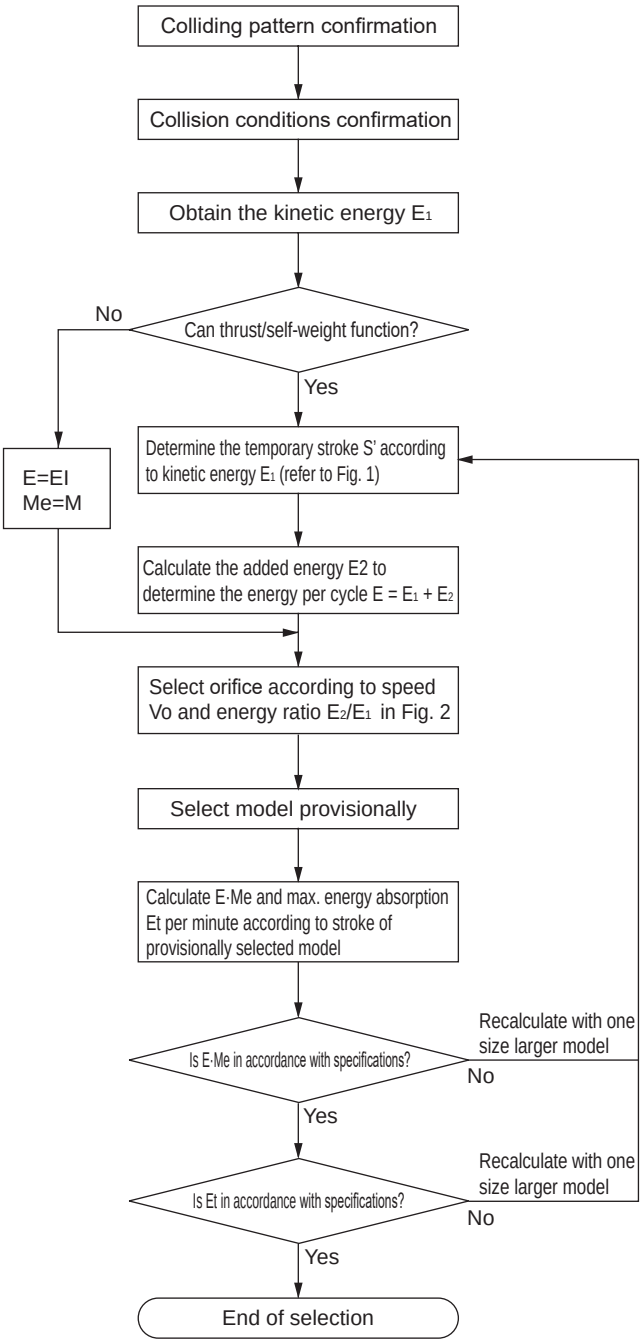

Code	Working conditions	Unit
E	Absorbed energy	J
E_1	Kinetic energy	J
E_2	Thrust/self-weight energy	J
G	Position of center of gravity	
S	FCK stroke	m
g	Gravity acceleration (9.8)	m/s^2
N	Rotation speed	rpm
Me	Equivalent weight	kg
Td	Motor start torque	N·m
K	Reduction ratio	

Example of colliding pattern

	Horizontal colliding		
	a. Simple horizontal colliding	b. With cylinder thrust	c. With motor drive force
Applications	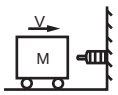	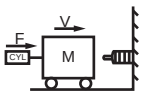	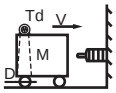
Kinetic energy E_1(J)	$E_1 = \frac{1}{2}\cdot M\cdot V^2$	$E_1 = \frac{1}{2}\cdot M\cdot V^2$	$E_1 = \frac{1}{2}\cdot M\cdot V^2$
Thrust/self energy E_2(J)	–––––	$E_2 = F\cdot S$	$E_2 = 2\cdot \frac{K}{D}\cdot Td\cdot S$
All absorbed energy E(J)	$E=E_1$	$E=E_1+E_2$	$E=E_1+E_2$
Equivalent weight Me (kg)	Me=M	$Me=\frac{2\cdot E}{V^2}$	$Me=\frac{2\cdot E}{V^2}$
Absorbed energy per hour Et(J/h)	$E_t = 60\cdot E\cdot n$	$E_t = 60\cdot E\cdot n$	$E_t = 60\cdot E\cdot n$
	Vertical colliding		
	d. Free fall	e. Cylinder lower limit stopper	f. Cylinder upper limit stopper
Applications	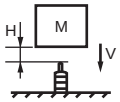	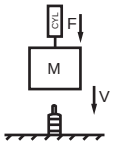	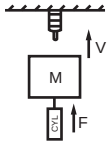
Kinetic energy E_1(J)	$E_1 = \frac{1}{2}\cdot M\cdot V^2$	$E_1 = \frac{1}{2}\cdot M\cdot V^2$	$E_1 = \frac{1}{2}\cdot M\cdot V^2$
Thrust/self energy E_2(J)	$E_2 = M\cdot g\cdot S$	$E_2 = (M\cdot g + F)\cdot S$	$E_2 = (F-M\cdot g)\cdot S$
All absorbed energy E(J)	$E=E_1+E_2$	$E=E_1+E_2$	$E=E_1+E_2$
Equivalent weight Me (kg)	$Me = \frac{2\cdot E}{V^2}(V=\sqrt{2/g/H})$	$Me=\frac{2\cdot E}{V^2}$	$Me=\frac{2\cdot E}{V^2}$
Absorbed energy per hour Et(J/h)	$E_t = 60\cdot E\cdot n$	$E_t = 60\cdot E\cdot n$	$E_t = 60\cdot E\cdot n$
	Slope colliding		
	g. Free fall	h. With cylinder thrust	i. With cylinder thrust
Applications	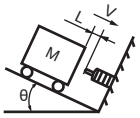	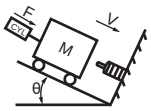	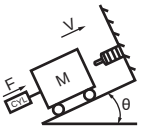
Kinetic energy E_1(J)	$E_1 = \frac{1}{2}\cdot M\cdot V^2$	$E_1 = \frac{1}{2}\cdot M\cdot V^2$	$E_1 = \frac{1}{2}\cdot M\cdot V^2$
Thrust/self energy E_2(J)	$E_2 = M\cdot g\cdot S\cdot \sin\theta$	$E_2 = (M\cdot g\cdot \sin\theta + F)\cdot S$	$E_2 = (F-M\cdot g\cdot \sin\theta)\cdot S$
All absorbed energy E(J)	$E=E_1+E_2$	$E=E_1+E_2$	$E=E_1+E_2$
Equivalent weight Me (kg)	$Me = \frac{2\cdot E}{V^2}(V=\sqrt{2\cdot g\cdot L\cdot \sin\theta})$	$Me=\frac{2\cdot E}{V^2}$	$Me=\frac{2\cdot E}{V^2}$
Absorbed energy per hour Et(J/h)	$E_t = 60\cdot E\cdot n$	$E_t = 60\cdot E\cdot n$	$E_t = 60\cdot E\cdot n$
	Oscillation colliding		**Rotation colliding**
	j. Free fall	k. With torque of motor, etc.	l. With torque of motor, etc.
Applications	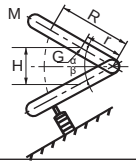	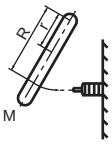	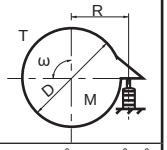
Kinetic energy E_1(J)	$E_1 = M\cdot g\cdot H$	$E_1 = \frac{J\cdot\omega^2}{2}$ or $\frac{1}{2}\cdot M\cdot V^2$	$E_1 = \frac{J\cdot\omega^2}{2} = \frac{M\cdot D^2\cdot\omega^2}{16}$
Thrust/self energy E_2(J)	$E_2 = \frac{r}{R}\cdot M\cdot g\cdot S$	$E_2 = \frac{T}{R}\cdot S$	$E_2 = \frac{T}{R}\cdot S$
All absorbed energy E(J)	$E=E_1+E_2$	$E=E_1+E_2$	$E=E_1+E_2$
Equivalent weight Me (kg)	$Me=\frac{2\cdot E}{V^2}(V=\frac{R}{r}\sqrt{\frac{3\cdot g\cdot H}{2}})$	$Me = \frac{2\cdot E}{V^2}(V=\omega\cdot R)$	$Me = \frac{2\cdot E}{V^2}(V=\omega\cdot R, \omega=\frac{2\pi\cdot N}{60})$
Absorbed energy per hour Et(J/h)	$E_t = 60\cdot E\cdot n$	$E_t = 60\cdot E\cdot n$	$E_t = 60\cdot E\cdot n$

Shock absorber selection guide

1 Clarify the colliding pattern of the device

- Horizontal motion
  - a. Simple horizontal collision
  - b. Collision with cylinder thrust
  - c. Collision with drive force of motor
- Vertical motion
  - d. Collision due to free fall
  - e. Collision with cylinder thrust (downward)
  - f. Collision with cylinder thrust (upward)
- Slope motion
  - g. Collision due to free sliding
  - h. Collision with cylinder thrust (downward)
  - i. Collision with cylinder thrust (upward)
- Oscillation/rotary motion
  - j. Collision due to free oscillating fall
  - k. Collision with motor torque, etc. (oscillation)
  - l. Collision with motor torque, etc. (rotation)

*1: Refer to “Example of colliding pattern”.

Example of selection

Clarifies colliding pattern of device.

Applications	Vertical colliding e. Cylinder lower limit stopper 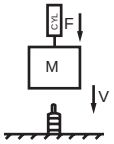
Kinetic energy E_1(J)	$E_1 = \frac{1}{2}\cdot M\cdot V^2$
Thrust/gravity energy E_2(J)	$E_2 = (Mg+F)\cdot S$
All absorbed energy E(J)	$E=E_1+E_2$
Equivalent weight Me(kg)	$Me= \frac{2\cdot E}{V^2}$
Absorbed energy per hour Et(J/h)	$E_t = 60\cdot E\cdot n$

2 Make required conditions/descriptions clear to calculate energy

● Horizontal collision

Code	Working conditions	Unit
M	Colliding object weight	kg
V	Colliding speed	m/s
F	Pushing force	N
n	Frequency	Cycle/min.
t	Ambient temperature	°C
Rt	Return time	s

Vertical colliding

Code	Working conditions	Unit
M	Colliding object weight	kg
V	Colliding speed	m/s
F	Pushing force	N
n	Frequency	Cycle/min.
t	Ambient temperature	°C
Rt	Return time	s
H	Drop height	m

Slope colliding

Code	Working conditions	Unit
M	Colliding object weight	kg
V	Colliding speed	m/s
F	Pushing force	N
n	Frequency	Cycle/min.
t	Ambient temperature	°C
Rt	Return time	s
L	Distance moved from collision	m
θ	Slope angle	deg

Vibration/rotation colliding

Code	Working conditions	Unit
M	Colliding object weight	Kg
V	Colliding speed	m/s
T	Torque	N·m
n	Frequency	Cycle/min.
t	Ambient temperature	°C
Rt	Return time	s
ω	Angular speed	rad/s
J	Moment of inertia	$kg\cdot m^2$
R	Distance of rotational axis to colliding point	m
r	Distance of rotational axis to CG	m
α·β	Slope angle	deg
H	Drop height	m
D	Rotor diameter	m

Colliding object weight : M=15 kg
Colliding speed : V=1.42 m/s
Pushing force : F=245.5N
Frequency : n = 10 cycle/min.
Ambient temperature : t=23°C
Return time : Rt = 2s (time up to re-collision)

3 Calculate kinetic energy E_1 according to “Example of colliding pattern”

● Calculate kinetic energy E_1 according to “Example of colliding pattern” (page 1850).

$$E = \frac{1}{2}M\cdot V^2 = \frac{1}{2} \times 15 \times 1.42^2$$
$$=15.1\ J$$

4 Select temporary stroke according to temporary selection graph

● From Fig. 1 (page 1853), select the temporary stroke.

S’ = 30

5 Calculate absorbed energy E according to "Example of colliding pattern"

- Calculate thrust/self-weight energy E_2 according to "Example of colliding pattern".
  Calculate S (stroke of FCK) as temporary stroke S' selected in Step 4.
  Calculate absorbed energy E according to "Example of colliding pattern".

6 Shock absorber temporary selection

- Select orifice according to energy ratio (thrust/self-weight energy, kinetic energy) and colliding speed on Fig. 2 (page 1853), then select a model provisionally according to calculated absorbed energy E.

  *1: Allowable energy absorption may vary depending on colliding speed. Refer to pages 1854 and 1855.

7 Re-calculate absorbed energy E with temporary selected model

- Calculate absorbed energy E_2 according to "Example of collision pattern". Calculate S (stroke of FCK) as model stroke selected in Step 6.
- Calculate absorbed energy E according to "Example of colliding pattern".

8 Calculate energy Et per hour

- Calculate energy per hour Et according to "Example of colliding pattern".

9 Confirm the equivalent weight M

- Calculate equivalent weight M according to "Example of colliding pattern".

10 Selection confirmation

- If calculated absorbed energy, energy per hour, equivalent weight, frequency of usage, ambient temperature and return time are in accordance with specifications of the selected shock absorber, there is no problem. If exceeding specifications range, select one size larger shock absorber according to model, selected before, then recalculate conditions.

  *1: The specified equivalent weight depends on the speed. Refer to pages 1854 and 1855 for details.

[CAUTION]
Use speed just before colliding into shock absorber to select shock absorber by calculation. This speed differs from average speed (cylinder stroke/travel time).
Calculate or measure speed just before collision, or use 1.5 to 2 times the average speed when making calculations for selection.

Example of selection

$E_2 = (M \cdot g + F) \cdot S$ =(15x9.8+245.5)x0.03
=11.8 J
$E = E_1 + E_2$=15.1+11.8=26.9 J

$\frac{E_2}{E_1} = \frac{11.8}{15.1} = 0.8$

Provisionally select porous orifice (FCK-H-3) from models of E = 26.9 and higher.

E_2=(15x9.8+245.5)x0.016=6.28 J
E=15.1+6.28=21.4 J

Et = 60·E·n = 60 x 21.4 x 10 = 1284J/h

$Me = \frac{2E}{V^2} = \frac{2x21.4}{1.42^2}$ =21.2 kg

		Calculated value	FCK-H-3 specification values	Judgment
E	J	21.4	29.4 or less	OK
Et	J/h	1284	20580 or less	OK
Me	kg	21.2	29 or less	OK
n	Cycle/min.	10	60 or less	OK
t	°C	23	-5 to 70	OK
Rt	S	2	0.5 or more	OK

Fig.1 Temporary selection graph

Obtain temporary stroke S' from kinetic energy E_1.

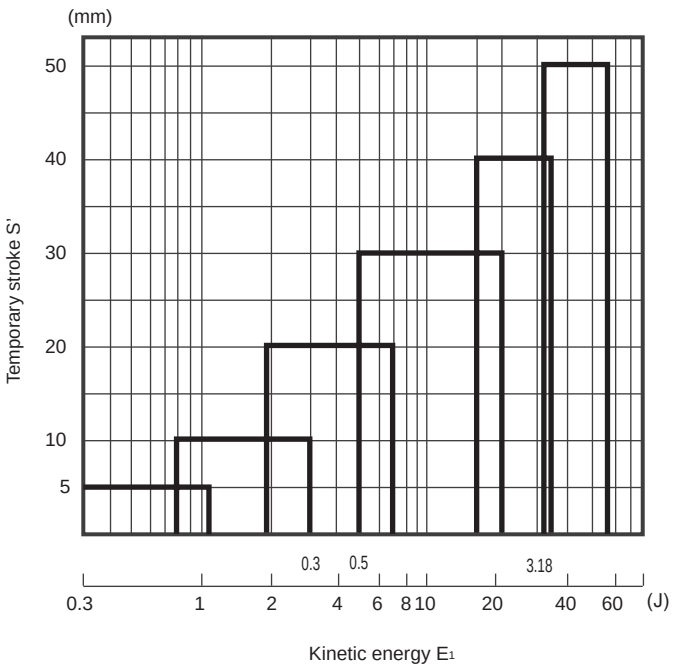

Fig. 2. Energy ratio (thrust/self-weight energy E_2, inertia energy E_1)

Refer to the following figure to select the orifice.

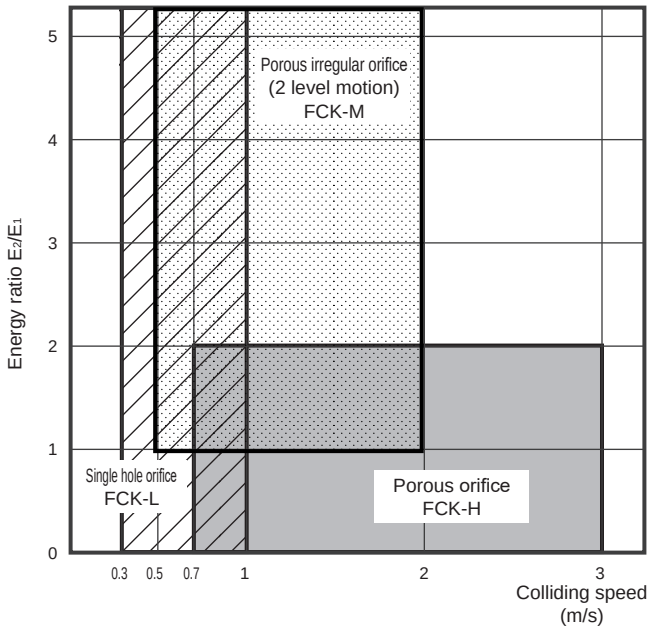

Absorbing characteristics structure

Constant orifice	Single hole orifice structure	FCK-L	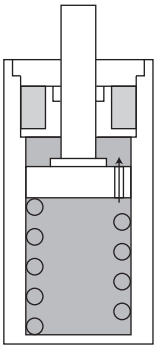	Single hole orifice structure includes a dash pot structure that uses the clearance between the piston and cylinder tube, a single tube structure with an orifice on the piston, and a double tube single hole orifice structure (adjustable). Each type has similar resistance characteristics. The common single tube structure is explained here. The piston, which has a single hole orifice, slides in the cylinder tube filled with oil. Since the orifice area is constant throughout the full stroke, resistance increases immediately after collision, and decreases as the stroke advances and speed declines.	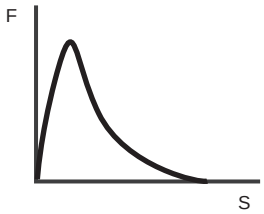
Displacement dependent orifice	Porous orifice structure	FCK-H	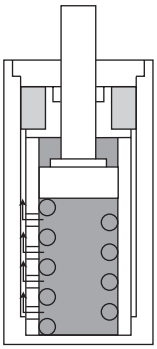	This orifice has a double structure consisting of an outer and inner tube. The piston slides along the inner wall of the inner tube. This inner tube has several orifices set in the direction of the stroke. The orifice area gradually decreases as the stroke advances and speed drops. Resistance thus fluctuates in a wave, but max. resistance is suppressed at a low level. Based on orifice design, absorption characteristics are matched to individual collision conditions.	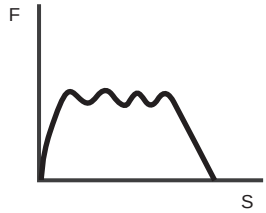
	Porous irregular orifice structure	FCK-M	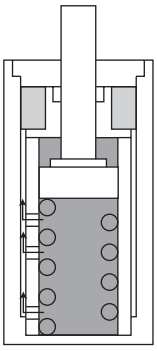	Structurally, this type is basically the same as the multiple orifice above, but by changing the orifice, energy is absorbed based on the purpose instead of with constant attenuation force. For example, the orifice in the FCK-M Series absorbs kinetic energy with the first half of the stroke and controls speed with the second half. Energy is absorbed ideally for cylinder thrust.	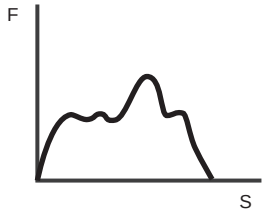

Equivalent weight/colliding speed characteristics graph

Equivalent weight:
Weight obtained by calculating all cylinder thrust and weight mass as inertial energy.

$$\frac{1}{2}MV^2+F\cdot S=E = MeV^2$$

M: Colliding object weight
F: Self weight of cylinder thrust or weight
Me: Equivalent weight

Single hole orifice (FCK-L)

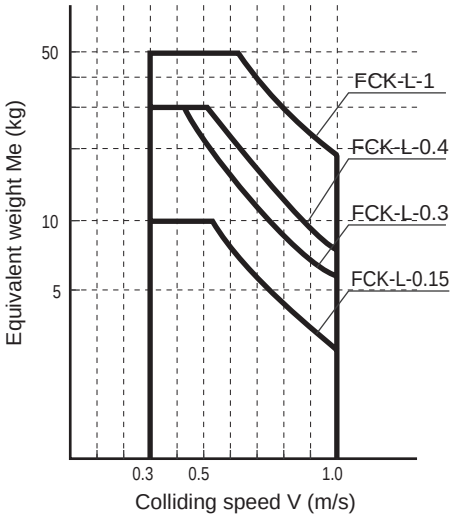

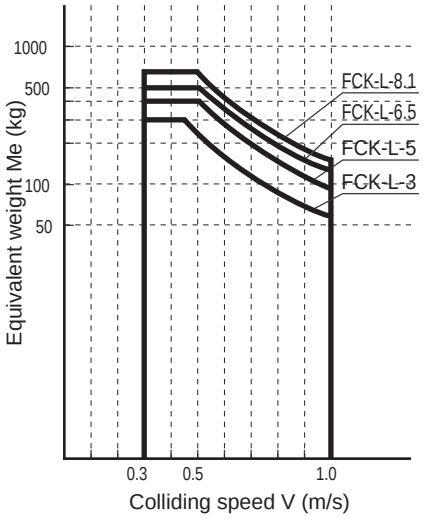

Porous irregular orifice (FCK-M)

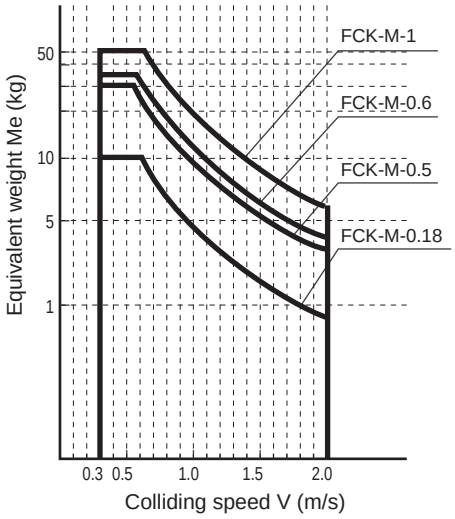

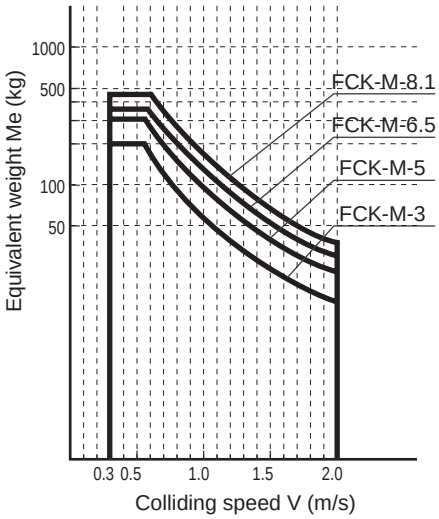

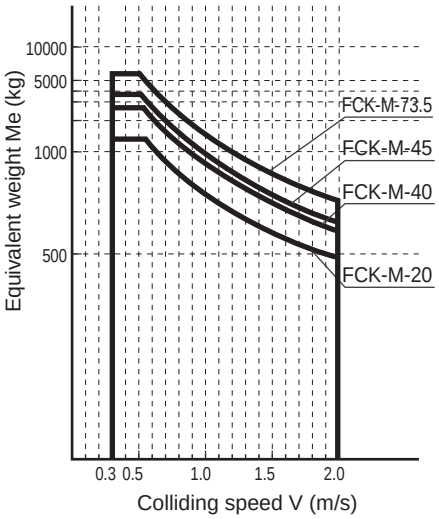

Porous orifice (FCK-H)

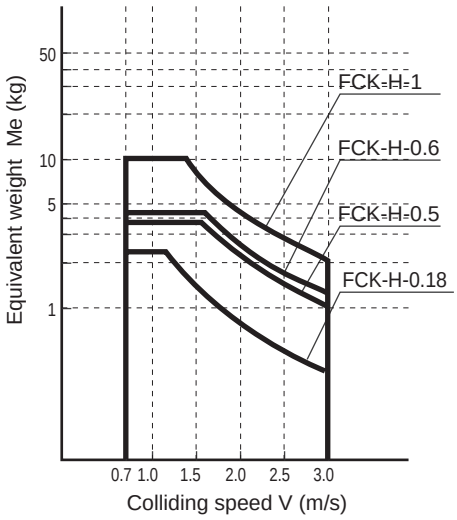

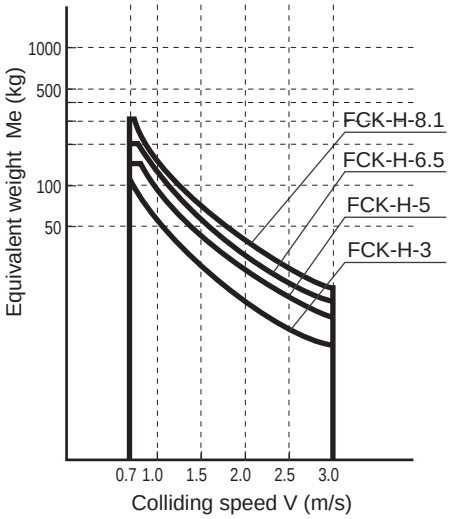

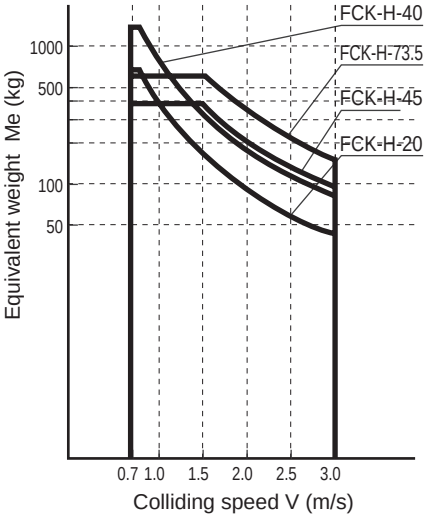

Absorbed energy/colliding speed characteristics graph

Single hole orifice (FCK-L)

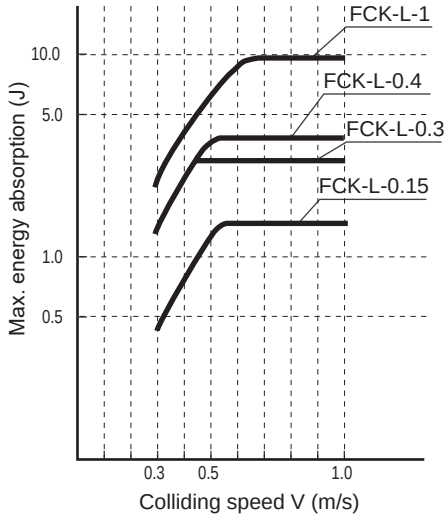

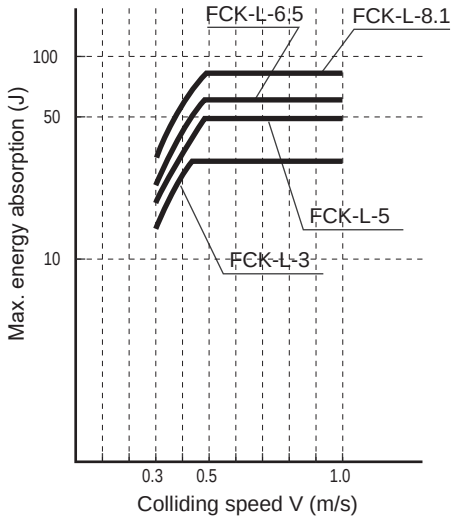

Porous irregular orifice (FCK-M)

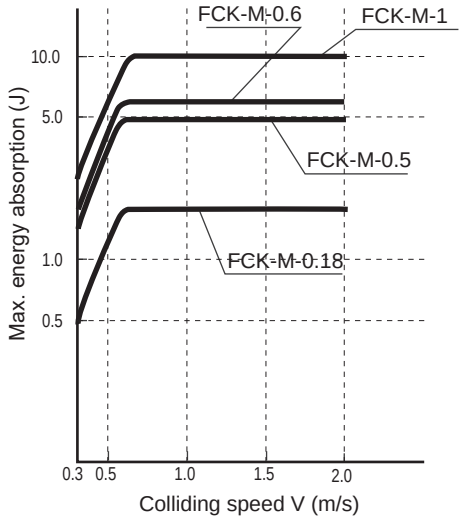

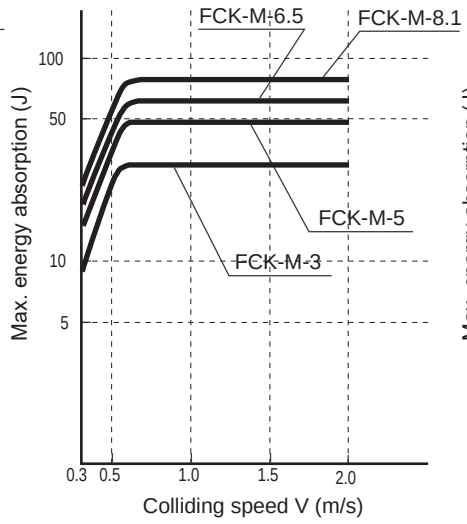

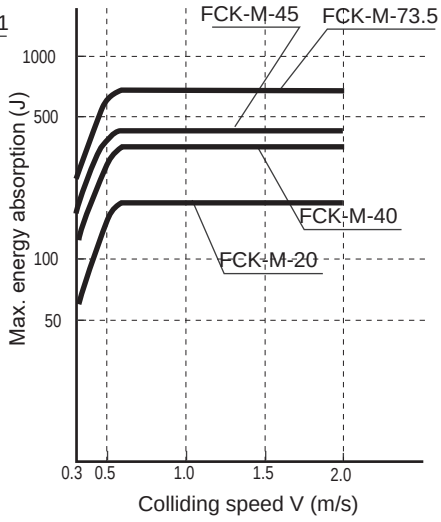

Porous orifice (FCK-H)

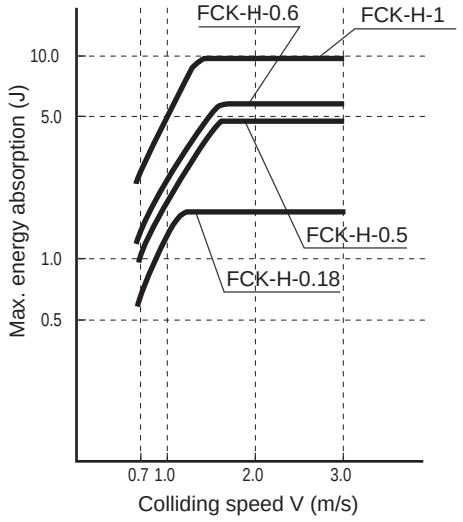

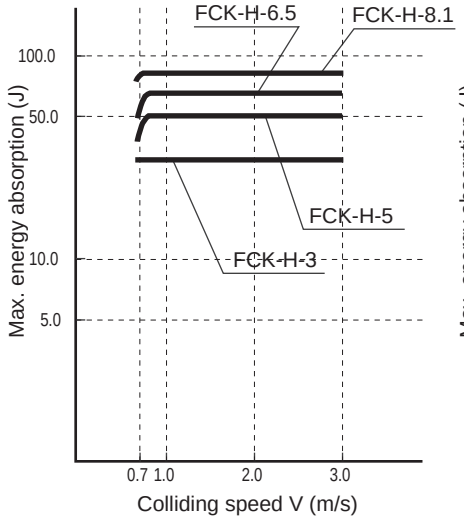

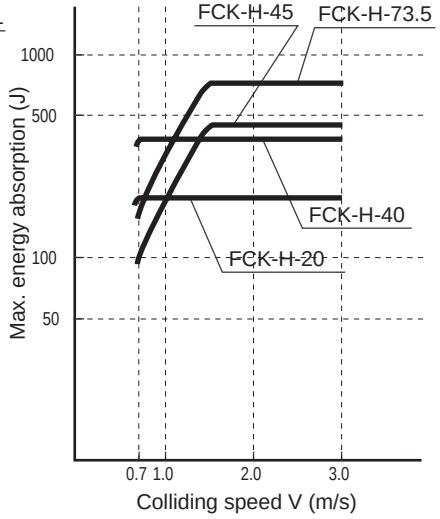

Selection calculation example

	Selection example 1	Selection example 2
1. Applications	Horizontal collision with cylinder thrust 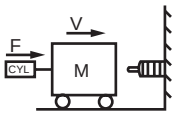 Cylinder bore size = ø40 Pressure = 0.5 MPa	Horizontal collision with motor drive force 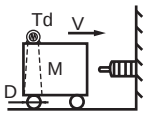 Motor start torque Td = 0.196 N·m Wheel diameter of carriage D = 50 mm Reduction ratio of carriage K = 10
2. Collision conditions	M = 30 kg V = 0.6 m/s F = 628.3 N $(F = \frac{\pi}{4} \times 40^2 \times 0.5 = 628.4\ N)$ n = 20 cycle/min. t = 23°C Rt = 3S	M = 150 kg V = 0.785 m/s F = 78.4 N $(F = 2 \cdot \frac{K}{D} \cdot Td = 2 \times \frac{10}{0.05} \times 0.196 = 78.4\ N)$ n = 5 cycle/min. t = 23°C Rt = 2S
3. Kinetic energy E_1	$E_1 = \frac{1}{2}MV^2 = \frac{1}{2} \times 30 \times 0.6^2 = 5.4\ J$	$E_1 = \frac{1}{2}MV^2 = \frac{1}{2} \times 150 \times 0.785^2 = 46.2\ J$
4. Temporary stroke S'	S' = 20mm from Fig.1	S' = 50mm from Fig.1
5. Thrust/self-weight energy E_2 Absorbed energy E	$E_2 = F \cdot S = 628.3 \times 0.02 = 12.57J$ $E = E_1 + E_2 = 5.4 + 12.57 = 17.97\ J$	$E_2 = 2 \cdot \frac{K}{D} \cdot TdS = 2 \times \frac{10}{0.05} \times 0.196 \times 0.05$ $= 3.92\ J$ $E = E_1 + E_2 = 46.2 + 3.92 = 50.12\ J$
6. Temporary selection	$\frac{E_2}{E_1} = \frac{12.57}{5.4} = 2.3$ Select porous irregular orifice (FCK-M-3) temporarily	$\frac{E_2}{E_1} = \frac{3.92}{46.2} = 0.08$ Select porous orifice (FCK-H-6.5) temporarily
7. Absorbed energy recalculation	$E_2 = F \cdot S = 628.3 \times 0.016 = 10.05J$ $E = E_1 + E_2 = 15.45\ J$	$E_2 = 2 \cdot \frac{K}{D} \cdot TdS = 2 \times \frac{10}{0.05} \times 0.196 \times 0.04$ $= 3.14\ J$ $E = E_1 + E_2 = 49.34\ J$
8. Energy per hour Et	$Et = 60 \cdot E \cdot n = 60 \times 15.45 \times 20 = 18540\ J/h$	$Et = 60 \times E \cdot n = 60 \times 49.34 \times 5 = 14802J/h$
9. Equivalent weight Me	$Me = \frac{2E}{V^2} = 85.8\ kg$	$Me = \frac{2E}{V^2} = \frac{2 \times 49.34}{0.785^2} = 160\ kg$
10. Confirmation	E, Et, Me, n, t and Rt are all OK Determined at FCK-M-3	E, Et, Me, n, t and Rt are all OK Determined at FCK-H-6.5

Selection example 3	Selection example 4
Carriage falling down slope 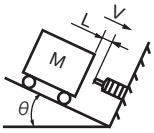 L=1 m θ=2°	Object performing rotational free fall 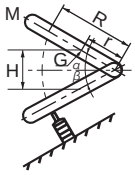 α = 15° β = 5°
M = 100 kg V = 0.83 m/s $(V = \sqrt{2 \cdot g \cdot L \cdot \sin\theta} = \sqrt{2 \times 9.8 \times 1 \times \sin 2°} = 0.83$ m/s) n = 10 cycle/min. t = 23°C Rt = 5 S	M = 2 kg R = 0.5 m H = 0.1 m r = 0.3 m $(V = \frac{R}{r}\sqrt{\frac{3 \cdot g \cdot H}{2}} = \frac{0.5}{0.3}\sqrt{\frac{3 \times 9.8 \times 0.1}{2}} = 2.02$ m/s) n = 50 cycle/min. t = 20°C Rt = 0.6S
$E_1 = \frac{1}{2} \cdot M \cdot V^2 = \frac{1}{2} \times 100 \times 0.83^2 = 34.4$J	$E_1 = M \cdot g \cdot H = 2 \times 9.8 \times 0.1 = 1.96$J
S' = 50mm from Fig.1	S' = 10 mm from Fig.1
$E_2 = M \cdot g \cdot S \cdot \sin\theta = 100 \times 9.8 \times 0.05 \times \sin 2° = 1.71$J $E = E_1 + E_2 = 34.4 + 1.71 = 36.1$ J	$E_2 = \frac{r}{R} \cdot M \cdot g \cdot S \cdot \cos\beta = \frac{r}{R} \times 2 \times 9.8 \times 0.01 \times \cos 5°C = 0.11$J $E = E_1 + E_2 = 1.96 + 0.11 = 2.07$ J
$\frac{E_2}{E_1} = \frac{1.71}{34.4} = 0.05$ Select porous orifice (FCK-H-5) temporarily	$\frac{E_2}{E_1} = \frac{0.11}{1.96} = 0.06$ Select porous orifice (FCK-H-0.5) temporarily
$E_2 = M \cdot g \cdot S \cdot \sin\theta = 100 \times 9.8 \times 0.03 \times \sin 2° = 1.03$J $E = E_1 + E_2 = 35.4$ J	$E_2 = \frac{r}{R} \cdot M \cdot g \cdot S \cdot \cos\beta = 0.11$J $E = E_1 + E_2 = 1.96 + 0.11 = 2.07$ J
$Et = 60 \cdot E \cdot n = 60 \times 35.4 \times 10 = 21240$J/h	$Et = 60 \cdot E \cdot n = 60 \times 2.07 \times 50 = 6210$J/h
$Me = \frac{2E}{V^2} = \frac{2 \times 35.4}{0.83^2} = 102.7$ kg	$Me = \frac{2E}{V^2} = \frac{2 \times 2.07}{2.02^2} = 1.0$ kg
E, Et, Me, n, t and Rt are all OK Determined at FCK-H-5	E, Me, n, t and Rt are OK. However, recalculate with one size larger FCK-H-0.6, since Et is too high.

SCP*3
CMK2
CMA2
SCM
SCG
SCA2
SCS2
CKV2
CAV2/ COVP/N2
SSD2
SSG
SSD
CAT
MDC2
MVC
SMG
MSD/ MSDG
FC*
STK
SRL3
SRG3
SRM3
SRT3
MRL2
MRG2
SM-25
ShkAbs
FJ
FK
Spd Contr
Ending

Selection example 5	Selection example 6
Object falling down slope 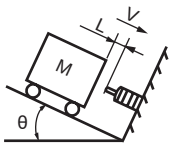 L = 0.45 m θ = 5°	Horizontal rotational collision with torque 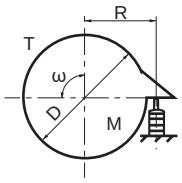
M = 1.0 kg V = 0.88 m/s ($V = \sqrt{2 \cdot g \cdot L \cdot \sin\theta} = \sqrt{2 \times 9.8 \times 0.45 \times \sin 5°} = 0.88$ m/s) n = 15 cycle/min. t = 23°C Rt = 2S	J = 204.1 kgm^2 ω = 0.6 rad/s R = 1.25 m n = 10 cycle/min. T = 68.6 N·m t = 20°C Rt = 3s
$E_1 = \frac{1}{2} \cdot M \cdot V^2 = \frac{1}{2} \times 1.0 \times 0.88^2 = 0.387$J	$E_1 = \frac{J \cdot \omega^2}{2} = \frac{204.1 \times 0.6^2}{2} = 36.7$ J
S' = 5mm from Fig.1	S' = 50mm from Fig.1
$E_2 = M \cdot g \cdot S \cdot \sin\theta = 1 \times 9.8 \times 0.005 \times \sin 5° = 0.004$J $E = E_1 + E_2 = 0.387 + 0.004 = 0.391$ J	$E_2 = \frac{T}{R} \cdot S = \frac{68.6}{1.25} \times 0.05 = 2.74$J $E = E_1 + E_2 = 36.7 + 2.74 = 39.44$ J
$\frac{E_2}{E_1} = \frac{0.004}{0.387} = 0.01$ Select single hole orifice (FCK-L-0.15) temporarily	$\frac{E_2}{E_1} = \frac{2.74}{36.7} = 0.07$ $V = \omega \cdot R = 0.6 \times 1.25 = 0.75$ m/s Select porous orifice (FCK-H-5) temporarily
$E_2 = M \cdot g \cdot S \cdot \sin\theta = 1 \times 9.8 \times 0.008 \times \sin 5° = 0.007$J $E = E_1 + E_2 = 0.394$ J	$E_2 = \frac{T}{R} \cdot S = \frac{68.6}{1.25} \times 0.03 = 1.65$J $E = E_1 + E_2 = 38.6$ J
$Et = 60 \cdot E \cdot n = 60 \times 0.394 \times 15 = 354.6$J/h	$Et = 60 \cdot E \cdot n = 60 \times 38.6 \times 10 = 23160$J/h
$Me = \frac{2E}{V^2} = \frac{2 \times 0.394}{0.88^2} = 1.02$ kg	$Me = \frac{2E}{V^2} = \frac{2 \times 38.6}{0.75^2} = 137.2$ kg
E, Et, Me, n, t and Rt are all OK Determined at FCK-L-0.15	E, Et, Me, n, t and Rt are OK. Determined at FCK-H-5.

Pneumatic components

Safety Precautions

Be sure to read this section before use.

Refer to Intro Page 73 for general information of the cylinder, and to Intro Page 80 for general information of the cylinder switch.

Product-specific cautions: Shock absorber SKL/NCK/SCK/FCK Series

Design/selection

1. Common

WARNING

■ Use the product in the range of conditions specified for the product.

If max. energy absorption in specifications is exceeded, damage or operation faults may occur. Note that the performance listed in the specifications cannot be exhibited if the products are not used with their full stroke.

CAUTION

■ Confirm before use that the product will withstand the working environment.

- Use in conditions exceeding the ambient temperature range will negatively affect durability.
- Do not use in an environment other than atmospheric pressure (vacuum, high pressure).

■ Be careful of splattering due to damage of the cap.

- If used outside the specifications, the cap may be damaged and cause injuries due to the device flying apart.
- Either install a cover to prevent splatter or stand away in a position where safety can be ensured while the master unit is in operation.
- Do not use this product inside clean rooms.
  Failure to comply may cause contamination of the clean rooms.

■ Confirm the colliding conditions.

- Before use, obtain the colliding speed, colliding object weight, thrust applied to the shock absorber and the number of collisions per minute.

(1) This will also be necessary during calculations for selection. In cases when the colliding speed is less than or equal to the specified range, the shock absorber cannot be expected to perform as well, since it will be more difficult for resistance to occur and the energy absorption will be smaller.

(2) This product cannot be used in cases where the number of collisions per minute will exceed the max. frequency.

■ Check that the surface of the colliding object contacted by the piston rod has a high degree of hardness.

- For types without cap, a high surface compression load will be applied to the contact surface of the piston rod of the colliding object. The contact surface is to have a high degree of hardness (hardness rating of HRC 35 or above).

■ Take note of the returning force of the colliding object.

- When using this product for conveyor drive, etc., it may be pressed back by internal spring force after energy is absorbed. For the return force, refer to the field for the return spring force listed in the specifications.

■ Do not use 2 or more shock absorbers in a parallel arrangement as it will be difficult to synchronize the motion thereof. Absorb the impact with a single shock absorber having a large absorption energy.

■ Use an external stopper or the optional stopper nut at the final stop position of the colliding object so impact is not applied to the body. Impact force on the body may lead to decreased durability or defective return. Confirm before use that the product will withstand the working environment.

■ The max. repetition frequency will differ depending on the ambient temperature.

■ The values provided in the specification descriptions are for use in room temperature (20°C). Note that the specification values will vary depending on the ambient temperature.

Mounting, installation and adjustment

1. Common

⚠ DANGER

■ Do not use this product near fire or in devices or machines having an ambient temperature exceeding specifications.
The flammable oil in the product poses a risk of fire.

■ Do not place in fire.
Since oil is sealed, this product may explode or ignite if placed in fire.

⚠ WARNING

■ Do not apply an eccentric load at a deflection angle of ±A° or more from the center line of the piston rod.
- Collision of a load at a deflection angle of ±A° or more may cause defective return due to the piston rod becoming bent or deterioration of performance due to eccentric wear of the sliding portions.
  When using the unit at a deflection angle of ±A° or more, use the optional deflection angle adapter. This will enable use at a deflection angle of up to ±10°. (FCK Series)

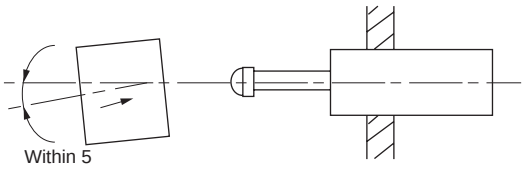

	SKL/FCK	NCK/SCK
A	2.5°	5°

- When using rotary motion collision, set the distance from the center of the colliding object's rotation to the shock absorber installation position at 12-fold and over of the shock absorber stroke (3-fold and over when using a deflection angle adaptor). Install so contact is at a right angle at a position half of the stroke.

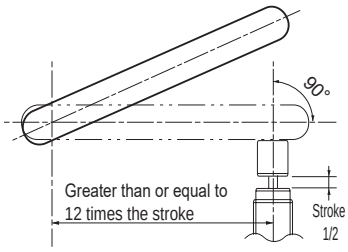

■ Use with mounting parts of insufficient strength is prohibited.
- Operating the unit with mounting parts of insufficient strength may cause damage to the master unit or lead to injuries.
- Ensure that the strength of the mounting parts is at least the max. load multiplied by the safety rate.
  (Refer to the max. load. or contact CKD.)

■ Do not remove the cap of the shock absorbers equipped with a cap.
- As the piston rod has been extended in order to mount the cap, use with the cap removed will cause damage to the bottom portion.

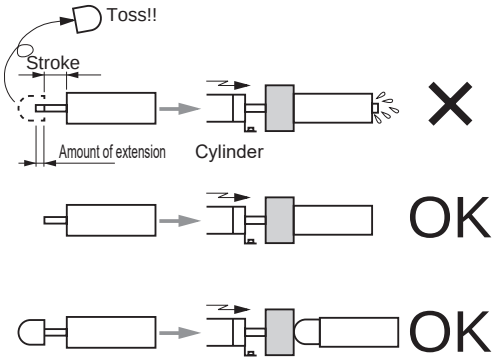

■ A guide is required if the colliding object vibrates.
Install a secure guide on the colliding object if the colliding object vibrates or if force is applied to the piston rod at an axial right angle direction.■ When there is the risk of static electricity building up in an explosive environment
Install a grounding device for releasing electrical charge and never use buffering surface materials that may create sparks.

■ Dumping into fire is prohibited.
- Since the oil is sealed, this product has a risk of injury as it may explode or ignite if placed in fire.
- Dispose of the oil according to prescribed methods for processing waste oil.

■ Do not apply a separate external load with a colliding object which has been stopped at the end of its stroke. Additional impact of the external load may lead to damage.

■ Turn device power OFF and confirm the machine is stopped before installing, removing, or adjusting the stroke.

⚠ CAUTION

■ Make sure the tightening torque of the installation nut is in accordance with the following table.

● The shock absorber may be damaged if nut tightening torque exceeds the upper limit in the table below.
If the nut is to be securely tightened, use adhesives, etc., to ensure nut tightness.

(SKL Series)

Thread diameter (mm)	M8x0.75	M10x1	M12x1
Nut tightening torque (N·m)	1.2 to 2.0	3 to 4	5 to 6

(NCK Series)

Thread diameter (mm)	M8x0.75	M10x1	M12x1	M14x1.5	M20x1.5
Nut tightening (N·m)	1.2 to 2.0	3 to 4	5 to 6	7.5 to 10	22 to 30

Thread diameter (mm)	M25x1.5	M27x1.5
Nut tightening (N·m)	55 to 70	100 to 130

(SCK Series)

Thread diameter (mm)	M10x1	M12x1	M16x1	M20x1	M25x1.5
Nut tightening (N·m)	3.4	5.4	14.2	70.8	421.7 to 588.4

Thread diameter (mm)	M30x1.5	M40x1.5	M45x1.5
Nut tightening (N·m)	149.1 to 196.1	274.6 to 353.0	421.7 to 588.4

(FCK Series)

Thread diameter (mm)	M10x1	M12x1	M14x1.5	M16x1.5	M20x1.5
Nut tightening (N·m)	5.9 to 7.8	5.9 to 7.8	8.3 to 9.8	11.8 to 14.7	29.4 to 35.3

Thread diameter (mm)	M25x1.5 M25x2	M27x1.5 M27x3	M30x1.5	M36x1.5	M42x1.5
Nut tightening (N·m)	49.0 to 61.0	58.9 to 73.5	78.4 to 98.0	98.0 to 122.5	392.0 to 490.0

■ If the rotating objects collide or if deformation or wear is generated between the shock absorber and the colliding object, place protective material over the collision surface to prevent deformation and wear.

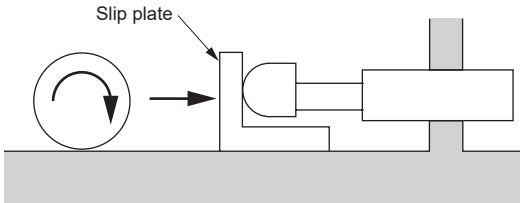

■ Do not damage the sliding portion of the piston rod or the threaded portion on the outer diameter of the damper case.
Do not contact or sandwich objects between the piston rod sliding section or outer tube screws O. D. section, or overly screw in fastening screws, etc., causing damage or dents. Scratches or dents on the sliding portion of the piston rod will cause damage of the packing, etc., and may lead to leakage of oil or defective operation. Scratches or dents on the threaded portion on the outer diameter of the outer tube may make it impossible to install the unit on the base or lead to defective operation due to deformation of internal structuring parts.

■ Do not use in conditions where oil mist or water drops may contact the rod surface, or in areas with high levels of wear powder. Energy is not absorbed properly and faults may occur.

■ Use without an external stopper is prohibited.

● Operation without an external stopper may damage the main body due to bottoming.

● Operate the unit upon installing an external stopper at the position decided for each model.

	L
NCK	0.5 mm
SCK	2 to 3 mm
FCK	1 mm

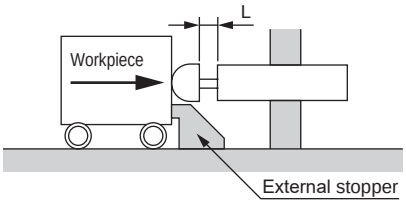

■ Installation with other than the tightening torque value is prohibited.

● Installation with other than the tightening torque value may lead to damage of the master unit.

● Do not fix with screws that do not match the mounting holes. This may cause the product to collapse or become damaged.

■ Be careful of detachment of the snap ring.

● If used outside the specifications, the internal pressure of the inner tube in the shock absorber may rise abnormally, causing the snap ring to come off. This may cause inner parts to pop out and cause injury.

● Do not go near the shock absorber during operation.

■ If the device is stored with the rod pushed in, the performance of the air chamber may drop. Do not store with the rod pushed in.

■ Be sure to adjust the adjustable, use at the optimum position.

■ Make sure that the piston rod and the threaded portion on the outer diameter of the tube are not scratched.

● The sealant will become scratched, which may lead to decreased durability or defective return.

2. Adjustment method for the FCK series

⚠ CAUTION

■ To adjust the shock absorber, first set the adjusting dial to “2”, collide, then while observing the status, rotate in the direction of “1” or “3” to the optimum position.

● After setting the scale to an appropriate position, tighten the lock screw before starting use. If the lock screw is not tightened, the adjusted position may deviate and optimum absorption may not be attained.
(However, FCK-L-0.15, FCK-$^{H}_{M}$-0.18, FCK-L-0.3, and FCK-$^{H}_{M}$-0.5 are not provided with a lock screw mechanism.)

● Protect the shock absorber with an external stopper or a stopper nut while making adjustments.
* Adjustment knob 1→2→3 indicates absorbed energy levels of low→medium→high.

● As there are slight variances between individual products, adjust each product to determine the most appropriate adjustment positions.

● The recommended tightening torque for the lock screw is as follows:

FCK-□-0.4, 0.6	0.09 ± 0.01 N·m
FCK-□-1	0.3 ± 0.02 N·m
FCK-□-3 and absorber outer diameter thread size M2O and higher models	0.7 ± 0.03 N·m

3. Adjustment method for the SCK series

⚠ CAUTION

As products of SCK-**-0.3 and above are equipped with an adjuster, adjust in accordance with the steps below.
As the adjuster is capable of being turned by more than one rotation, when adjusting it be sure to first turn it to the right (clockwise) to the end (max. absorbed energy scale mark) before turning it to the left (counterclockwise) to make adjustments.
The adjuster has a rotation-stop function and locks the position with a detent. Be sure to check that the colliding force is applied when the detent is activated.

*1. The max. energy absorption is attained when the adjuster is turned clockwise to 9, while the min. energy absorption is attained when the adjuster is turned counterclockwise by slightly more than one rotation. Min. energy may vary per product. Be careful, as forcing the adjuster to turn will lock or damage it.

*2. The operation time may become longer or operation may stop midway if the adjuster is not set to an appropriate level.

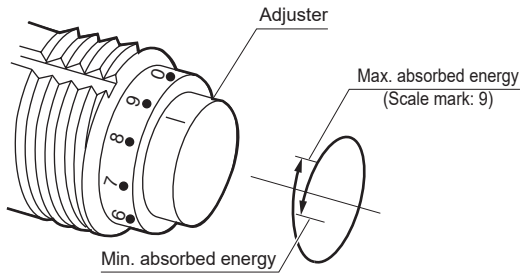

Use/maintenance

1. Common

⚠ WARNING

■ Disassembly is prohibited.
- Do not disassemble the unit, as doing so may be dangerous.

⚠ CAUTION

■ Careless oil dumping is prohibited.
- Careless disposal of the oil in the shock absorbers will pollute the environment.
- Dispose of the oil according to prescribed methods for processing waste oil.

■ Be careful of irregular vibrations as well as noises due to vibrations.
- If the sound of collision or vibration becomes abnormally loud, replace the unit as it is possible that the service life has been reached. Continued use following such symptoms may lead to damage of the equipment to which the unit has been installed.

FJ

Floating fitting

Related products

Overview

This floating fitting eliminates misalignment and parallelism defects during cylinder mounting, and realizes smooth rod actuation.

Features

Easy centering/parallelism alignment.
This can be set quickly.
Compact and high tensile/compression force permissible.
With dust cover. (excluding FJ-30, 36, 40 and 45).
3 types in series.
Filled with lubricant and not requiring lubrication.

CONTENTS

Series variation	1864
● Floating fitting (FJ)	1866
⚠ Safety precautions	1871

Floating fitting FJ Series

Variation	Model No.	Thread size							
		M3x0.5	M4x0.7	M5x0.8	M6x1.0	M8x1.0	M8x1.25	M10x1.25	
Basic	FJ-0	●	●	●	●	●	◎	●	
Foot	FJ-L					●	◎	●	
Flange	FJ-F					●	◎	●	

●: Standard, ◎: Option, ○: Made to order, ■: Not available

Thread size												Page
	M12x1.25	M12x1.5	M14x1.5	M16x1.5	M18x1.5	M22x1.5	M26x1.5	M30x1.5	M36x1.5	M40x1.5	M45x1.5	
	◎	●	●	●	●	●	●	●	○	○	○	1866
	◎	●	●	●	●	●	●	●	○	○	○	1866
	◎	●	●	●	●	●	●	●	○	○	○	1866

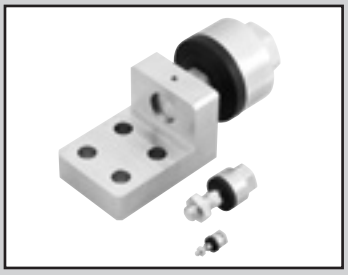

Floating fitting

FJ Series

● Cylinder diameter: ø20 to ø200

RoHS CAD

Specifications

Item / Model No.	Nominal port size of thread x pitch	Max. working tension and compression (kN) *1 Basic	Flange	Foot	Allowable eccentricity (mm)	Oscillating angle	Ambient temperature
FJ-*- 3	M3x0.5	0.019	——	——	0.5	±5°	-10 (14°F) to 60°C (140°F)
4	M4x0.7	0.053	——	——	0.5		
5	M5x0.8	0.121	——	——	0.5		
6	M6x1.0	1.08	——	——	0.75		
8	M8x1.0	1.08	1.08	1.08	0.75		
8-1.25	M8x1.25	1.08	1.08	1.08	0.75		
10	M10x1.25	2.45	2.45	2.45	0.75		
12-1.25	M12x1.25	2.45	2.45	2.45	0.75		
12	M12x1.5	2.45	2.45	2.45	0.75		
14	M14x1.5	5.88	5.88	5.88	1.0		
16	M16x1.5	10.8	10.8	10.8	1.5		
18	M18x1.5	10.8	10.8	10.8	1.5		
22	M22x1.5	17.6	17.6	17.6	2.0		
26	M26x1.5	27.5	27.5	27.5	3.0		
30	M30x1.5	60.8	60.8	60.8	3.0		
36	M36x1.5	87.3	87.3	87.3	4.0		
40	M40x1.5	87.3	87.3	87.3	4.0		
45	M45x1.5	108	108	108	4.0		

*1: Max. working tension and compression shows static load.
*2: FJ-8-1.25 and FJ-12-1.25 are optional products. FJ-36, 40 and 45 are made-to-order products.

How to order

FJ - 0 - 3

Ⓐ Mounting

Ⓑ Nominal port size of thread x pitch

Code	Description
Ⓐ Mounting	
0	Basic
L	Foot
F	Flange

Ⓑ Nominal port size of thread x pitch

	Mounting	O	L	F
3	M3x0.5	●		
4	M4x0.7	●		
5	M5x0.8	●		
6	M6x1.0	●		
8	M8x1.0	●	●	●
8-1.25	M8x1.25	●	●	●
10	M10x1.25	●	●	●
12-1.25	M12x1.25	●	●	●
12	M12x1.5	●	●	●
14	M14x1.5	●	●	●
16	M16x1.5	●	●	●
18	M18x1.5	●	●	●
22	M22x1.5	●	●	●
26	M26x1.5	●	●	●
30	M30x1.5	●	●	●
36	M36x1.5	●	●	●
40	M40x1.5	●	●	●
45	M45x1.5	●	●	●

[Example of model No.]

FJ-0-3

Model: Floating fitting
Ⓐ Mounting : Basic
Ⓑ Nominal port size of thread x pitch : M3x0.5

Specifications for rechargeable battery (Catalog No. CC-1226A)
(The model numbers are only for sizes 3, 4 and 5. As for the other sizes, products with standard model No. can support rechargeable batteries.)

FJ - ··· - P4*

● Design compatible with rechargeable battery manufacturing process

* Contact CKD for details.

Internal structure and parts list

● FJ-O-3 to 5

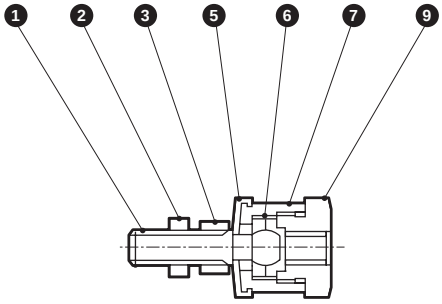

● FJ-O-6, 8, 10
FJ-O-36 to 45

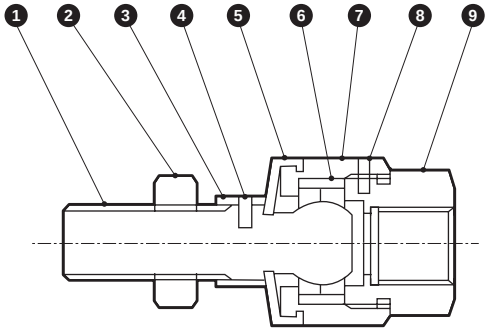

● FJ-12 to 30

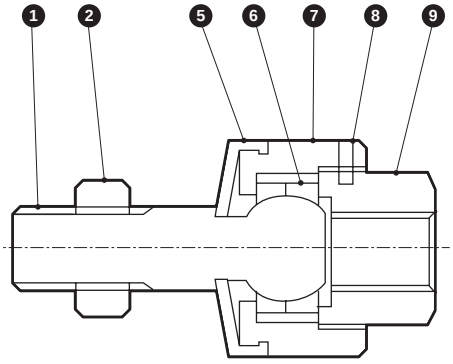

Cannot be disassembled

No.	Part name	Material	Treatment	No.	Part name	Material	Treatment
1	Ball stud	Alloy steel	Trivalent chromate treatment	8	Spring pin	Steel	Black finish
2	Rod nut	Steel	Trivalent chromate treatment	9	Socket	Copper alloy (FJ-3 to 5)	Electroless nickel plating
3	Stud nut	Steel	Trivalent chromate treatment			Steel (FJ-6 to 45)	Trivalent chromate treatment
4	Spring pin	Steel	Black finish	—	Foot	Steel (FJ-8.10.12)	Trivalent chromate treatment
5	Dust cover	Nitrile rubber	——			Cast iron (FJ-14 to 30)	Trivalent chromate treatment
6	Ball holder	Steel (FJ-3 to 5)	Electroless nickel plating			Steel (FJ-36 to 45)	Trivalent chromate treatment
		Alloy steel (FJ-6 to 45)	Trivalent chromate treatment	—	Flange	Steel	Trivalent chromate treatment
7	Case	Copper alloy (FJ-3 to 5)	Electroless nickel plating				
		Steel (FJ-6 to 45)	Trivalent chromate treatment				

*1: Spring pin ❹ is not available for FJ-6, 8 and 10.
*2: Dust cover ❺ is not included with FJ-30 and over.

SCP*3
CMK2
CMA2
SCM
SCG
SCA2
SCS2
CKV2
CAV2/COVP/N2
SSD2
SSG
SSD
CAT
MDC2
MVC
SMG
MSD/MSDG
FC*
STK
SRL3
SRG3
SRM3
SRT3
MRL2
MRG2
SM-25
ShkAbs
FJ
FK
Spd Contr
Ending

Dimensions: Basic

● FJ-0-3 to 5

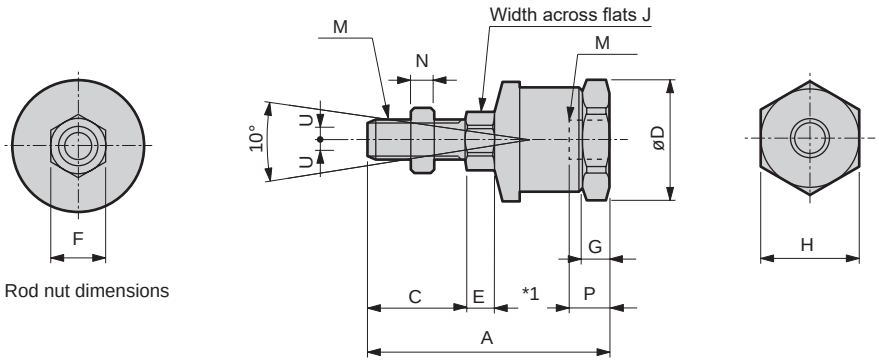

Rod nut dimensions

● FJ-0-6, 8, 10, 36 to 45
(Dust cover is not included with FJ-36 to 45)

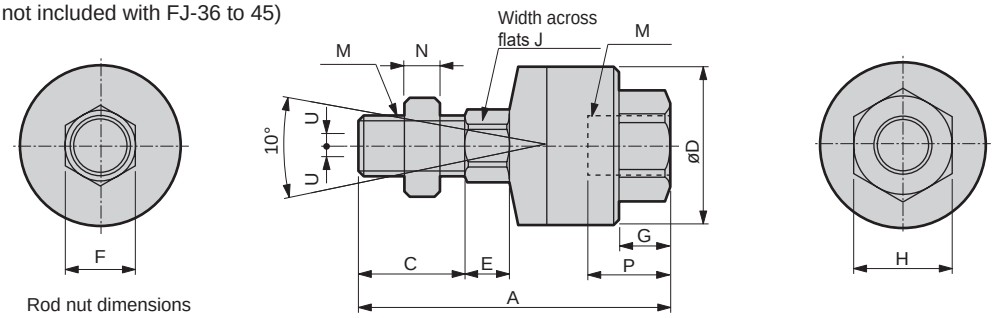

Rod nut dimensions

● FJ-0-12 to 30
(Dust cover is not included with FJ-30)

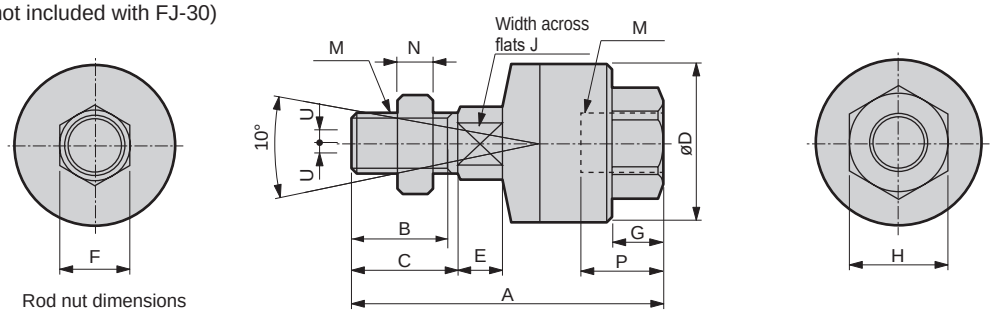

Rod nut dimensions

1: For FJ--3 to 5, strictly observe the screw-in depth (P).

Model No.	Major cylinders	M Nominal port size	M Pitch	A	B	C	D	E	F	G	H	J	N	P *1	Allowable eccentricity U	Max. working tension and compression KN	Weight kg
FJ-O- 3	SCPD3-6/SMG-6	3	0.5	23	——	8.3	12	2.5	5.5	2.5	11	5.5	1.8	4	0.5	0.019	0.012
4	SCPD3-10/SMG-10	4	0.7	26	——	10	12	3.5	7	2.5	11	5.5	2.4	3.7	0.5	0.053	0.012
5	SCPD3-16/SSD/SSD2-12-N/SMG-16	5	0.8	31.6	——	12	15.5	4	8	3.5	14	7	3.2	5.2	0.5	0.121	0.022
6	SSD/SSD2-16-N/SMG-20	6	1.0	45.4	——	15.8	21	4	10	9	17	10	3.6	12	0.75	1.08	0.057
8	CMA2/CMK2/CKV2-20/JSK2/JSM2-20	8	1.0	48.4	——	18.8	21	4	13	9	17	10	5	12	0.75	1.08	0.061
8-1.25	SMG-25/SSD/ SSD2-20-N/SCM-20	8	1.25	48.4	——	18.8	21	4	13	9	17	10	5	12	0.75	1.08	0.061
10	CMA2-30/SMG-32/CMK2/ SCG/CKV2-25/32/FCD-25-N/ SSD/SSD2-25-N/SCM-25/32/ JSK2-25/32/JSM2-30	10	1.25	56.2	——	22	24	7	17	10	19	12	6	12	0.75	2.45	0.092
12	CMA2/CMK2/CKV2-40/JSK2/JSM2-40	12	1.5	58	20.5	23	27	6	19	10	21	12	7	11.8	0.75	2.45	0.12
12-1.25	-	12	1.25	58	20.5	23	27	6	19	10	21	12	7	11.8	0.75	2.45	0.12
14	SCG-40/SCA2-40/FCD-32/40-N SSD/SSD2-32/40-N/SCM-40/JSC3-40	14	1.5	68.5	20	22	32	7	22	13	27	14	8	16.5	1.0	5.88	0.22
16	CAV2-50 COV2-50	16	1.5	84.2	26	29	43	11	24	14	27	16	10	16.9	1.5	10.8	0.4
18	SCG-50/63/SCA2-50/63/ FCD-50/63-N/SSD/SSD2-50/63-N/ SCM-50/63/JSC3-50/63	18	1.5	84.2	26	29	43	11	27	14	27	18	11	16.9	1.5	10.8	0.41
22	SCG-80/SCA2-80/SSD/ SSD2-80-N/SCM-80/JSC3-80	22	1.5	102.5	31	34	53	14	32	17	32	22	13	17.2	2.0	17.6	0.75
26	SCG-100/SCA2-100/SSD/SSD2-100-N/SCM-100/JSC3-100	26	1.5	121.6	39	42	69	15	41	20	41	26	16	20.8	3.0	27.5	1.5
30	SCS2-125/140/JSC4-125/140	30	1.5	145.2	47	50	90	16	46	21	46	30	18	26	3.0	60.8	3.1
36	SCS2-160/JSC4-160	36	1.5	163.5	——	57	108	16	55	22	55	55	21	25	4.0	87.3	4.6
40	SCS2-180/JSC4-180	40	1.5	170.5	——	64	108	16	60	22	55	60	24	25	4.0	87.3	4.7
45	SCS2-200	45	1.5	199.5	——	72	118	18	70	24	60	70	27	35	4.0	108	7.0

Dimensions: Foot

●FJ-L-8 to 12 (* part of FJ-12, 2 WAF)

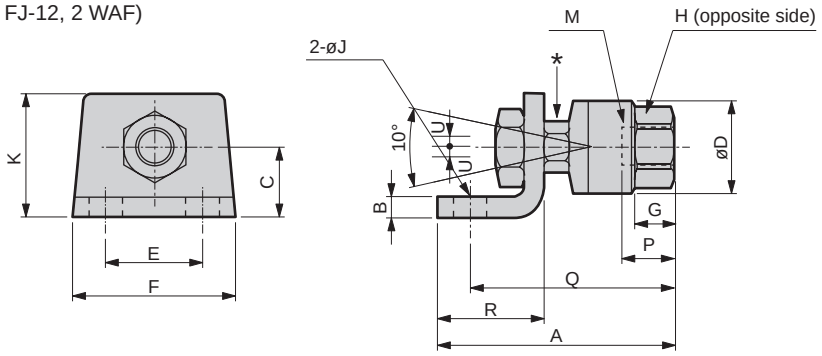

● FJ-L-14

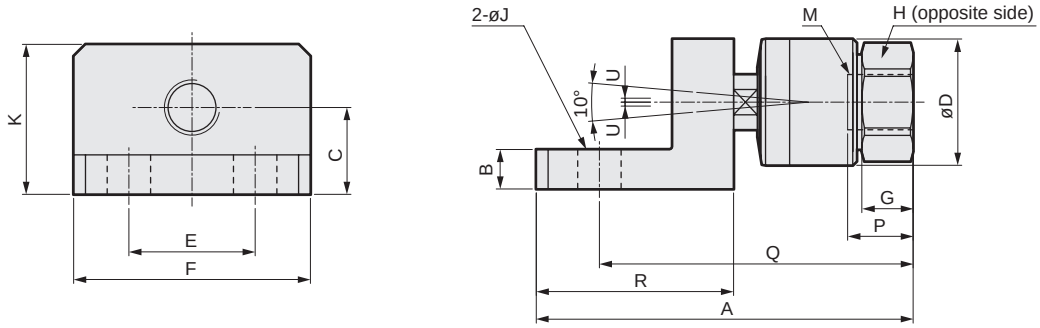

● FJ-L-16 to 45 (* part, 2 WAF)

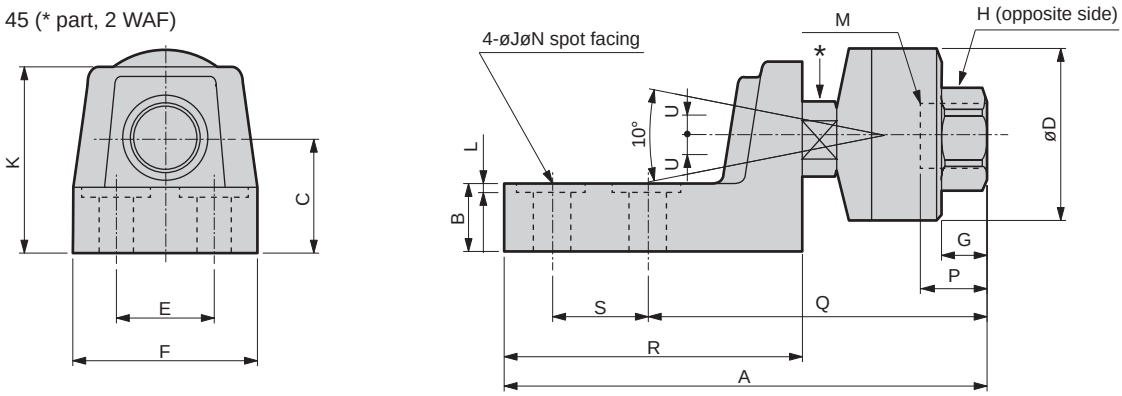

Model No.	Major cylinders	M Nominal port size	M Pitch	A	B	C	D	E	F	G	H	J	K	L	N	P	Q	R	S	Allowable eccentricity U	Max. working tension and compression KN	Weight kg
FJ-L-8	CMA2/CMK2/CKV-20/JSK2/JSM2-20	8	1.0	54.6	3.2	15	21	26	44	9	17	9	25	—	—	12	45.6	25	—	0.75	1.08	0.1
8-1.25	SMG-25/SSD/SSD2-20-N/SCM-20	8	1.25	54.6	3.2	15	21	26	44	9	17	9	25	—	—	12	45.6	25	—	0.75	1.08	0.1
10	CMA2-30/SMG-32/CMK2/SCG/CKV2-25/32/FCD-25-N/SSD/SSD2-25-N/SCM-25/32/JSK2-25/32/JSM2-30	10	1.25	64.5	5	19	24	26	44	10	19	9	32	—	—	12	54.5	30	—	0.75	2.45	0.18
12	CMA2/CMK2/CKV2-40/JSK2/JSM2-40	12	1.5	64.6	5	19	27	26	44	10	21	9	32	—	—	11.8	54.6	30	—	0.75	2.45	0.19
12-1.25	-	12	1.25	64.6	5	19	27	26	44	10	21	9	32	—	—	11.8	54.6	30	—	0.75	2.45	0.19
14	SCG-40/SCA2-40/FCD-32/40-N/SSD/SSD2-32/40-N/SCM-40/JSC3-40	14	1.5	95.5	10	22	32	32	60	13	27	11	38	—	—	16.6	79.5	50	—	1.0	5.88	0.43
16	CAV2-50 COV2-50	16	1.5	140.2	14	28	43	32	60	14	27	11	46	—	—	16.9	93.1	85	32	1.5	10.8	0.4
18	SCG-50/63/SCA2-50/63/FCD-50/63-N/SSD/SSD2-50/63-N/SCM-50/63/JSC3-50/63	18	1.5	140.2	14	28	43	32	60	14	27	11	46	—	—	16.9	93.1	85	32	1.5	10.8	1.1
22	SCG-80/SSD/SSD2-80-N/SCA2-80/SCM-80/JSC3-80	22	1.5	163.5	19	35	53	36	68	17	32	14	55	—	—	17.2	110.5	95	36	2.0	17.6	2.1
26	SCG-100/SCA2-100/SSD/SSD2-100-N/SCM-100/JSC3-100	26	1.5	179.6	24	42	69	36	68	20	41	14	64	1.5	26	20.8	126.6	100	36	3.0	27.5	2.9
30	SCS2-125/140/JSC4-125/140	30	1.5	217.2	35	55	90	46	82	21	46	18	80	1.5	32	26	152.2	122	46	3.0	60.8	5.6
36	SCS2-160/JSC4-160	36	1.5	254.5	41	67	108	56	100	22	55	22	97	—	—	25	177	148	56	4.0	87.3	8.9
40	SCS2-180/JSC4-180	40	1.5	254.5	41	67	108	56	100	22	55	22	97	—	—	25	177	148	56	4.0	87.3	8.8
45	SCS2-200	45	1.5	294	41	70	118	66	125	24	60	26	103	—	—	35	203	166	66	4.0	108	13.2

SCP*3
CMK2
CMA2
SCM
SCG
SCA2
SCS2
CKV2
CAV2/ COVP/N2
SSD2
SSG
SSD
CAT
MDC2
MVC
SMG
MSD/ MSDG
FC*
STK
SRL3
SRG3
SRM3
SRT3
MRL2
MRG2
SM-25
ShkAbs
FJ
FK
Spd Contr
Ending

Dimensions: Flange

CAD

● FJ-F-8 to 14 (* part of FJ-12 and 14, 2 WAF)

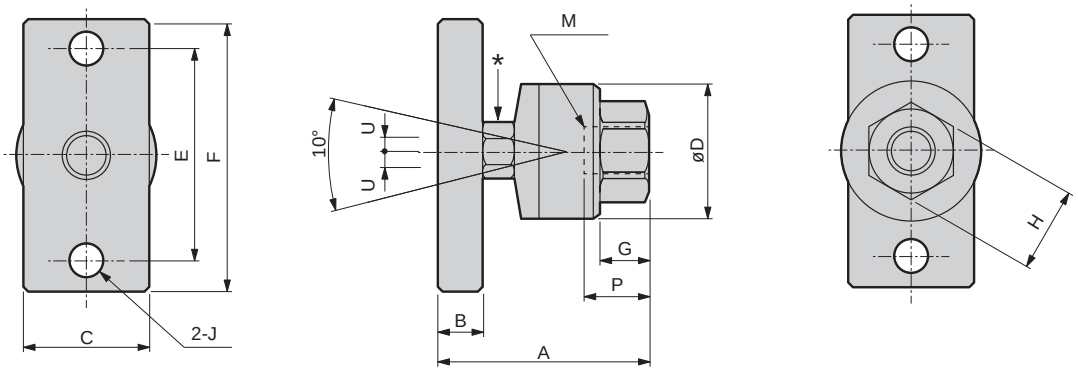

● FJ-F-16 to 45 (* part of FJ-36, 40 and 45, hexagon nut)

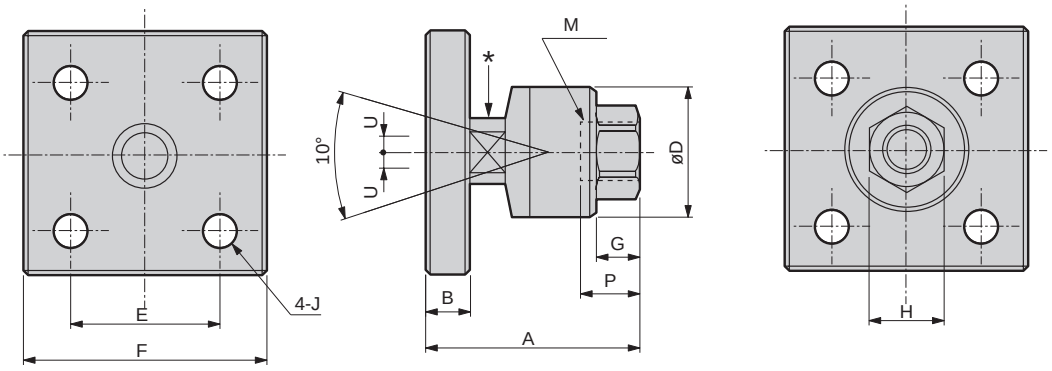

Model No.	Major cylinders	M Nominal port size	M Pitch	A	B	C	D	E	F	G	H	J	P	Allowable eccentricity U	Max. working tension and compression KN	Weight kg
FJ-F- 8	CMA2/CMK2/CKV-20/ JSK2/JSM2-20	8	1.0	35.6	6	19	21	40	52	9	17	6.6	12	0.75	1.08	0.11
8-1.25	SMG-25/SSD/ SSD2-20-N/SCM-20	8	1.25	35.6	6	19	21	40	52	9	17	6.6	12	0.75	1.08	0.11
10	CMA2-30/SMG-32/CMK2/ SCG/CKV2-25/32/FCD-25-N/ SSD/SSD2-25-N/SCM-25/32/ JSK2-25/32/JSM2-30	10	1.25	43.2	9	25	24	44	56	10	19	6.6	12	0.75	2.45	0.18
12	CMA2/CMK2/CKV2-40/ JSK2/JSM2-40	12	1.5	43.6	9	25	27	44	56	10	21	6.6	11.8	0.75	2.45	0.19
12-1.25	-	12	1.25	43.6	9	25	27	44	56	10	21	6.6	11.8	0.75	2.45	0.19
14	SCG-40/SCA2-40/FCD-32/40-N/ SSD/SSD2-32/40-N/SCM-40/JSC3-40	14	1.5	57.5	12	32	32	60	80	13	27	11	16.5	1.0	5.88	0.56
16	CAV2-50/COV2-50	16	1.5	71.2	16	——	43	50	75	14	27	11	16.9	1.5	10.8	1.1
18	SCG-50/63/SCA2-50/63/ FCD-50/63-N/SSD/SSD2-50/63-N/ SCM-50/63/JSC3-50/63	18	1.5	71.2	16	——	43	50	75	14	27	11	16.9	1.5	10.8	1.1
22	SCG-80/SCA2-80/SSD/ SSD2-80-N/SCM-80/JSC3-80	22	1.5	87.5	19	——	53	62	100	17	32	14	17.2	2.0	17.6	1.9
26	SCG-100/SCA2-100/SSD/ SSD2-100-N/SCM-100/JSC3-100	26	1.5	101.6	22	——	69	70	100	20	41	14	20.8	3.0	27.5	2.8
30	SCS2-125/140/JSC4-125/140	30	1.5	120.2	25	——	90	90	125	21	46	18	26	3.0	60.8	5.6
36	SCS2-160/JSC4-160	36	1.5	135	29	——	108	114	150	22	55	22	25	4.0	87.3	9.4
40	SCS2-180/JSC4-180	40	1.5	135	29	——	108	114	150	22	55	22	25	4.0	87.3	9.3
45	SCS2-200	45	1.5	159	32	——	118	132	175	24	60	26	35	4.0	108	13.4

Pneumatic components

Safety Precautions

Be sure to read this section before use.
Refer to Intro Page 73 for general information of the cylinder, and to Intro Page 80 for general information of the cylinder switch.

Product-specific cautions: Floating fitting FJ Series

Mounting, installation and adjustment

WARNING

- When screwing the male thread of a rod onto the female thread of a socket or case, check that it does not hit the bottom.
  If this floating fitting is used with the rod butted against the bottom, the ball stud does not float and fails to function properly.
  As a guide, the thread should be screwed onto the female thread to one or two turns from the bottom end position.
  For FJ-3 to 5, strictly observe the screw-in dimensions (P).

- When connecting the object being driven and the cylinder rod with a floating fitting, securely fix the components by fastening the screws with a tightening torque that is appropriate for the thread size. When there are further worries of loosening during use, take measures to prevent loosening by securing the component with a pin or by applying an adhesive.
  If the connected portion loosens and becomes detached, runaway or collapse, etc., of the object being driven may cause damage to the device or lead to injuries, etc.

- The screw section (ball stud) can be rotated, but is not a rotary fitting. Do not use this for rotation purposes.

Use/maintenance

WARNING

- Do not disassemble and reuse the product.

FK

Simplified floating fitting

Related products

Overview

This simplified floating fitting eliminates misalignment and parallelism defects during cylinder mounting, and realizes smooth rod actuation.

Features

Easy centering/parallelism alignment

This can be set quickly

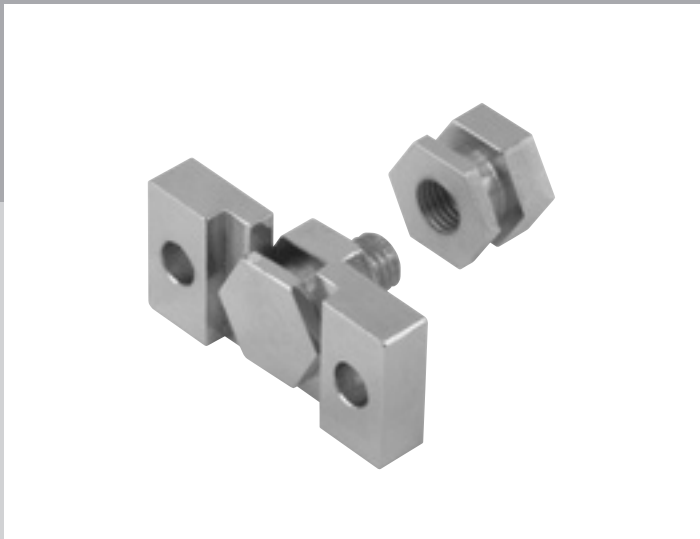

CONTENTS

Series variation	1873
● Simplified floating fitting (FK)	1874
⚠ Safety precautions	1877

●: Standard, ▢: Not available

Variation	Model No.	Thread size																Page
		M3x 0.5	M4x 0.7	M5x 0.8	M6x 1.0	M8x 1.0	M8x 1.25	M10x 1.25	M10x 1.5	M12x 1.5	M14x 1.5	M16x 1.5	M16x 2.0	M18x 1.5	M20x 2.5	M22x 1.5	M26x 1.5	
Male thread	FK-*-N	●	●	●	●		●		●				●		●			1874
Female thread	FK	●	●	●	●	●	●	●		●	●	●		●		●	●	

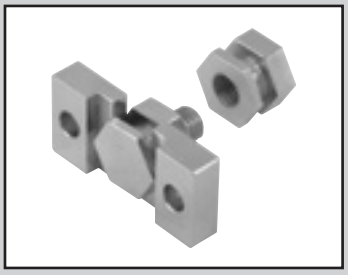

Simplified floating fitting

FK Series

● Cylinder diameter: ø6 to ø100

RoHS CAD

Specifications

Model No.		Allowable load *1 (N)	Allowable eccentricity (mm)	Backlash amount in thrust direction (mm)
Male thread	Female thread			
FK-M3-N	FK-M3	63	±0.3	0.1 to 0.3
FK-M4-N	FK-M4	110		
FK-M5-N	FK-M5	179		
FK-M6-N	FK-M6	253		
FK-M8-N	FK-M8x1.0	462		
——	FK-M8x1.25	462		
FK-M10-N	FK-M10	734		
——	FK-M12	1069		
——	FK-M14	1466		
FK-M16-N	FK-M16	2003	±0.7	
——	FK-M18	2448		
FK-M20-N	——	3130		
——	FK-M22	3896		
——	FK-M26	6219		

*1: Allowable load indicates static load.

How to order

● Simplified floating fitting

FK - M3-N

Model No.

Ⓐ Thread size

Code	Description	
Ⓐ **Thread size**		
M3-N	M3x0.5	Male thread
M4-N	M4x0.7	
M5-N	M5x0.8	
M6-N	M6x1.0	
M8-N	M8x1.25	
M10-N	M10x1.5	
M16-N	M16x2.0	
M20-N	M20x2.5	
M3	M3x0.5	Female thread
M4	M4x0.7	
M5	M5x0.8	
M6	M6x1.0	
M8x1.0	M8x1.0	
M8x1.25	M8x1.25	
M10	M10x1.25	
M12	M12x1.5	
M14	M14x1.5	
M16	M16x1.5	
M18	M18x1.5	
M22	M22x1.5	
M26	M26x1.5	

Specifications for rechargeable battery (Catalog No. CC-1226A)

FK - [Thread size] - P40

● Design compatible with rechargeable battery manufacturing process

* Contact CKD for details.

Dimensions

Material : Steel
Surface treatment : Nickeling

● Bracket (1)

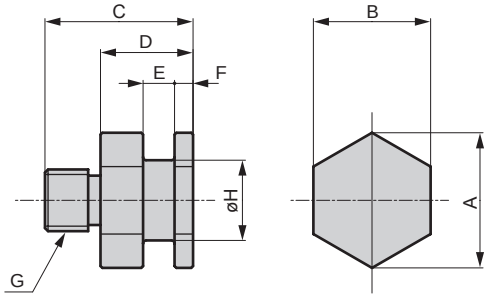

● Bracket (2)

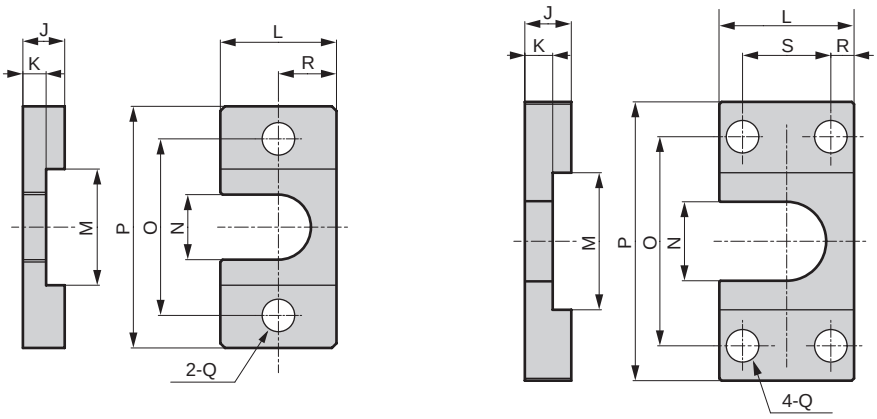

M3 to M16 M20

Bracket (1)

Model No.	Cylinder	A	B	C	D	E	F	G	H	Weight g
FK-M3-N	SSD/SSD2-12	11.6	10	15	10	$3.1^{+0.1}_{0}$	2	M3x0.5	6	5.3
FK-M4-N	SSD/SSD2-16	11.6	10	15.5	10	$3.1^{+0.1}_{0}$	2	M4x0.7	6	5.5
FK-M5-N	SSD/SSD2-20, FCD-25	13.9	12	16.5	10	$3.1^{+0.1}_{0}$	2	M5x0.8	8	8.3
FK-M6-N	SSD/SSD2-25, FCD-32	13.9	12	19	10	$3.1^{+0.1}_{0}$	2	M6x1.0	8	8.9
FK-M8-N	SSD/SSD2-32, 40, FCD-40, 50	21.9	19	23	15	$5.1^{+0.1}_{0}$	3	M8x1.25	13	30.8
FK-M10-N	SSD/SSD2-50, 63, FCD-63	21.9	19	24	15	$5.1^{+0.1}_{0}$	3	M10x1.5	13	32.7
FK-M16-N	SSD/SSD2-80	37	32	31	20	$7.1^{+0.1}_{0}$	4	M16x2.0	23	122.5
FK-M20-N	SSD/SSD2-100	53.1	46	43	28	$12.1^{+0.1}_{0}$	7	M20x2.5	32	333

Bracket (2)

Model No.	Cylinder	J	K	L	M	N	O	P	Q	R	S	Weight g
FK-M3-N	SSD/SSD2-12	6	$3^{0}_{-0.1}$	16	14	7	24	34	4.5	8	—	16
FK-M4-N	SSD/SSD2-16	6	$3^{0}_{-0.1}$	16	14	7	24	34	4.5	8	—	16
FK-M5-N	SSD/SSD2-20, FCD-25	6	$3^{0}_{-0.1}$	19	16	9	26	36	4.5	9.5	—	19.6
FK-M6-N	SSD/SSD2-25, FCD-32	6	$3^{0}_{-0.1}$	19	16	9	26	36	4.5	9.5	—	19.6
FK-M8-N	SSD/SSD2-32, 40, FCD-40, 50	9	$5^{0}_{-0.1}$	25	25	14	38	52	7	12.5	—	54.5
FK-M10-N	SSD/SSD2-50, 63, FCD-63	9	$5^{0}_{-0.1}$	25	25	14	38	52	7	12.5	—	54.5
FK-M16-N	SSD/SSD2-80	12	$7^{0}_{-0.1}$	44	42	25	62	85	11	22	—	216
FK-M20-N	SSD/SSD2-100	22	$12^{0}_{-0.1}$	65	59	34	90	120	14	13.5	38	788

SCP*3
CMK2
CMA2
SCM
SCG
SCA2
SCS2
CKV2
CAV2/COVP/N2
SSD2
SSG
SSD
CAT
MDC2
MVC
SMG
MSD/MSDG
FC*
STK
SRL3
SRG3
SRM3
SRT3
MRL2
MRG2
SM-25
ShkAbs
FJ
FK
Spd Contr
Ending

Dimensions

Material : Steel
Surface treatment : Nickeling

● Bracket (1)

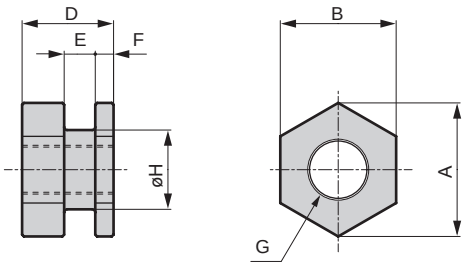

● Bracket (2)

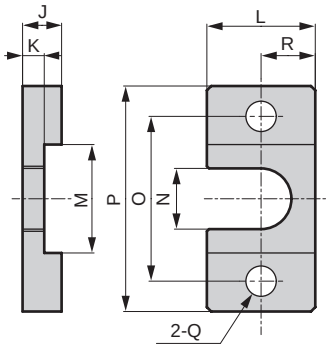

M3 to M18

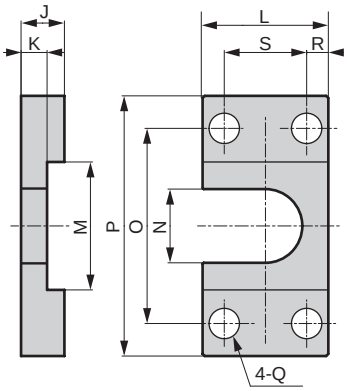

M22 to M26

Bracket (1)

Model No.	Cylinder	A	B	D	E	F	G	H	Weight g
FK-M3	SCPD3-6, CAT-6, SMG-6	11.6	10	10	$3.1^{+0.1}_{0}$	2	M3x0.5	6	4.6
FK-M4	SCPD3-10, CAT-10, SMG-10	11.6	10	10	$3.1^{+0.1}_{0}$	2	M4x0.7	6	4.1
FK-M5	SCPD3-16, CAT-15, SMG-16 SSD-12-N	13.9	12	10	$3.1^{+0.1}_{0}$	2	M5x0.8	8	6.2
FK-M6	SMG-20, SSD/SSD2-16-N	13.9	12	10	$3.1^{+0.1}_{0}$	2	M6x1.0	8	5.7
FK-M8x1.0	CMK2-20, CMA2-20, JSK2-20, JSM2-20	21.9	19	15	$5.1^{+0.1}_{0}$	3	M8x1.0	13	23
FK-M8x1.25	SMG-25, SSD/SSD2-20-N, SCM-20	21.9	19	15	$5.1^{+0.1}_{0}$	3	M8x1.25	13	23.4
FK-M10	CMK2-25/32, CMA2-30, SMG-32, SSD/SSD2-25-N, SCG-32, SCM-25/32, FCD-25-N, JSK2-25/32, JSM2-30	21.9	19	15	$5.1^{+0.1}_{0}$	3	M10x1.25	13	20.2
FK-M12	CMK2-40, CMA2-40, JSK2-40, JSM2-40	27.7	24	15	$5.1^{+0.1}_{0}$	3	M12x1.5	18	35.7
FK-M14	SCA2-40, SSD/SSD2-32/40-N/SCG-40, SCM-40, FCD-32/40-N, JSC3-40	27.7	24	15	$5.1^{+0.1}_{0}$	3	M14x1.5	18	31.2
FK-M16	CAV2-50	37	32	20	$7.1^{+0.1}_{0}$	4	M16x1.5	23	81.3
FK-M18	SCA2-50/63, SSD/SSD2-50/63-N, SCM-50/63, SCG-50/63, FCD-50/63-N, JSC3-50/63	37	32	20	$7.1^{+0.1}_{0}$	4	M18x1.5	23	73.1
FK-M22	SCA2-80, SSD/SSD2-80-N, JSC3-80, SCG-80, SCM-80, CAV2-75/100	53.1	46	28	$12.1^{+0.1}_{0}$	7	M22x1.5	32	226
FK-M26	SCA2-100, SSD/SSD2-100-N, SCM-100, JSC3-100, SCG-100	53.1	46	28	$12.1^{+0.1}_{0}$	7	M26x1.5	32	193

Bracket (2)

Model No.	Cylinder	J	K	L	M	N	O	P	Q	R	S	Weight g
FK-M3	SCPD3-6, CAT-6, SMG-6	6	$3^{0}_{-0.1}$	16	14	7	24	34	4.5	8	—	16
FK-M4	SCPD3-10, CAT-10, SMG-10	6	$3^{0}_{-0.1}$	16	14	7	24	34	4.5	8	—	16
FK-M5	SCPD3-16, CAT-15, SMG-16 SSD/SSD2-12-N	6	$3^{0}_{-0.1}$	19	16	9	26	36	4.5	9.5	—	19.6
FK-M6	SMG-20, SSD/SSD2-16-N	6	$3^{0}_{-0.1}$	19	16	9	26	36	4.5	9.5	—	19.6
FK-M8x1.0	CMK2-20, CMA2-20, JSK2-20, JSM2-20	9	$5^{0}_{-0.1}$	25	25	14	38	52	7	12.5	—	54.5
FK-M8x1.25	SMG-25, SSD/SSD2-20-N, SCM-20	9	$5^{0}_{-0.1}$	25	25	14	38	52	7	12.5	—	54.5
FK-M10	CMK2-25/32, CMA2-30, SMG-32, SSD/SSD2-25-N, SCG-32, SCM-25/32, FCD-25-N, JSK2-25/32, JSM2-30	9	$5^{0}_{-0.1}$	25	25	14	38	52	7	12.5	—	54.5
FK-M12	CMK2-40, CMA2-40	9	$5^{0}_{-0.1}$	32	32	19	50	70	9	16	—	94.5
FK-M14	SCA2-40, SSD/SSD2-32/40-N/SCG-40, SCM-40, FCD-32/40-N, JSC3-40	9	$5^{0}_{-0.1}$	32	32	19	50	70	9	16	—	94.5
FK-M16	CAV2-50	12	$7^{0}_{-0.1}$	44	42	25	62	85	11	22	—	216
FK-M18	SCA2-50/63, SSD/SSD2-50/63-N, SCM-50/63, SCG-50/63, FCD-50/63-N, JSC3-50/63	12	$7^{0}_{-0.1}$	44	42	25	62	85	11	22	—	216
FK-M22	SCA2-80, SSD/SSD2-80-N, JSC3-80, SCG-80, SCM-80, CAV2-75/100	22	$12^{0}_{-0.1}$	65	59	34	90	120	14	13.5	38	788
FK-M26	SCA2-100, SSD/SSD2-100-N, SCM-100, JSC3-100, SCG-100	22	$12^{0}_{-0.1}$	65	59	34	90	120	14	13.5	38	788

Safety Precautions

Be sure to read this section before use.
Refer to Intro Page 73 for general information of the cylinder, and to Intro Page 80 for general information of the cylinder switch.

Product-specific cautions: Simplified floating fitting FK Series

Mounting, installation and adjustment

WARNING

- When connecting the object being driven and the cylinder rod with a simplified floating fitting, securely fix the components by fastening the screws with a tightening torque that is appropriate for the thread size. When there are further worries of loosening during use, take measures to prevent loosening by securing the component with a pin or by applying an adhesive.

- The screw section (Bracket (1)) can be rotated but is not a rotary fitting. Do not use this for rotary purposes.

Speed controller

SC*

■ **Pneumatic auxiliary components**

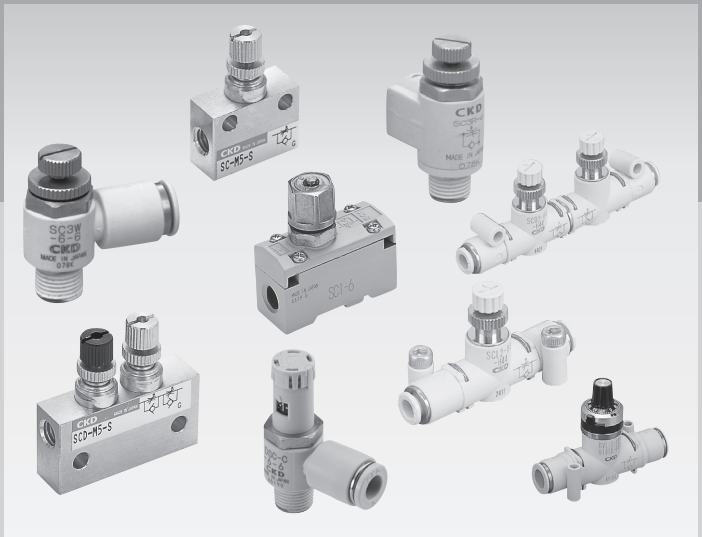

CONTENTS

Series variation	1880
● Speed controller with adjusting dial (DSC)	1884
● Needle valve with adjusting dial (DVL)	1898
● Elbow/push-in fitting (SC3W)	1906
● Universal/push-in fitting (SC3U)	1910
● Line type/with push-in fitting (SCL2)	1916
● In/out line type/with push-in fitting (SCD2)	1916
● Needle valve/line type/with push-in fitting (SCL2-N)	1920
● Stainless steel anti-corrosion (SC3P)	1926
● Direct port/elbow (SC3R)	1930
● Miniature (SC-M3/M5)	1932
● Miniature in/out (SCD-M3/M5)	1934
● Medium bore size Rc1/8 to Rc1/2 (SC1)	1938
● Large bore size Rc3/4 to Rc2 (SC)	1940
● Outdoor Series Medium bore size (SC1-W)	1942
⚠ Safety precautions	1944

Speed controller

● Applicable to ø2.5 to ø450 cylinders

Values in ( ) are for low speed, fine speed, low flow rate or fine flow rate.

Model/outline	Model No.	Port size (Rc or R)											Compatible tube O.D.						Effective cross-sectional area (mm^2)		Flow rate (ℓ/min) ANR 0.5 MPa		Cylinder bore size (mm)	Page
		M3	M5	1/8	1/4	3/8	1/2	3/4	1	1 1/4	1 1/2	2	ø3.2	ø4	ø6	ø8	ø10	ø12	Free flow	Controlled flow	Free flow	Controlled flow	Reference	
● Speed controller with adjusting dial	DSC-C-M5-3		●										●						1.3	0.9(0.3)	87	60(20)	ø6 to ø25	1884
	DSC-C-M5-4		●											●					1.5	0.9(0.3)(0.1)	100	60(20)(6.7)	ø6 to ø25	
	DSC-C-M5-6		●												●				1.5	0.9(0.3)(0.1)	100	60(20)(6.7)	ø6 to ø25	
	DSC-(C-)6-4			●										●					3.2	2.4(0.9)(0.2)	210	160(60)(13)	ø15 to ø32	
	DSC-(C-)6-6			●											●				4	3(0.9)(0.2)	270	200(60)(13)	ø15 to ø32	
	DSC-(C-)6-8			●												●			4	3(0.9)(0.2)	270	200(60)(13)	ø15 to ø32	
	DSC-8-6				●										●				7	5(2)	470	320(130)	ø20 to ø50	
	DSC-8-8				●											●			8	6(2)	530	400(130)	ø20 to ø50	
	DSC-8-10				●												●		8	6(2)	530	400(130)	ø20 to ø50	
	DSC-10-6					●									●				10	6(4)	670	400(270)	ø32 to ø75	
	DSC-10-8					●										●			15	10.5(4)	1000	700(270)	ø32 to ø75	
	DSC-10-10					●											●		16	12(4)	1070	800(270)	ø32 to ø75	
	DSC-10-12					●												●	16	12(4)	1070	800(270)	ø32 to ø75	
	DSC-15-10						●										●		22	17(6)	1470	1120(400)	ø40 to ø100	
	DSC-15-12						●											●	24	17.5(6)	1600	1200(400)	ø40 to ø100	
	DSC-S□-06-H44													●					2.5	2.4(0.9)(0.2)	170	160(60)(13)	ø15 to ø32	1892
	DSC-S□-06-H66														●				4.5	3(0.9)(0.2)	300	200(60)(13)	ø15 to ø32	
	DSC-S□-08-H66														●				6	5(2)	400	360(130)	ø20 to ø50	
	DSC-S□-08-H88															●			8	6(2)	550	400(130)	ø20 to ø50	
	DSC-S□-10-H88															●			13.5	10.5(4)	900	710(270)	ø32 to ø75	
	DSC-S□-10-H1010																●		16.5	12(4)	1100	780(270)	ø32 to ø75	
	DSC-S□-10-H1212																	●	18	12(4)	1200	780(270)	ø32 to ø75	
● Needle valve with adjusting dial, check valve	DVL-S-06-H44-020													●					2.5	0.15	170	18	ø6 to ø40	1898
	DVL-S-06-H66-020														●				4.5	0.15	300	18	ø6 to ø40	
	DVL-S-06-H44-080													●					2.5	1.2	170	80	ø6 to ø40	
	DVL-S-06-H66-080														●				4.5	1.2	300	80	ø6 to ø40	
	DVL-S-06-H66-160														●				4.5	2.5	300	160	ø6 to ø40	
	DVL-S-08-H66-240														●				6	3.6	400	240	ø20 to ø50	
	DVL-S-08-H88-240															●			8	3.6	550	240	ø20 to ø50	
	DVL-S-10-H88-400															●			13.5	6.6	900	440	ø32 to ø75	
	DVL-S-10-H1010-400																●		16.5	6.6	1100	440	ø32 to ø75	
	DVL-S-10-H1212-400																	●	18	6.6	1200	440	ø32 to ø75	
● Needle valve with adjusting dial, needle valve	DVL-N-06-H44-020													●					0.15		18		-	1898
	DVL-N-06-H66-020														●				0.15		18		-	
	DVL-N-06-H44-080													●					1.2		80		-	
	DVL-N-06-H66-080														●				1.2		80		-	
	DVL-N-06-H66-160														●				2.4		160		-	
	DVL-N-08-H66-240														●				3.6		240		-	
	DVL-N-08-H88-240															●			3.6		240		-	
	DVL-N-10-H88-400															●			6.6		440		-	
	DVL-N-10-H1010-400																●		6.6		440		-	
	DVL-N-10-H1212-400																	●	6.6		440		-	

Values in ( ) indicate low speed.

Model/outline	Model No.	Port size (Rc or R)											Compatible tube O.D.						Effective cross-sectional area (mm^2)		Flow rate (ℓ/min) ANR 0.5 MPa		Cylinder bore size (mm)	Page
		M3	M5	1/8	1/4	3/8	1/2	3/4	1	1 1/4	1 1/2	2	ø3.2	ø4	ø6	ø8	ø10	ø12	Free flow	Controlled flow	Free flow	Controlled flow	Reference	
● Elbow with push-in fitting	SC3W-M3-3	●											●						0.4(0.3)	0.3(0.08)	27(20)	20(5.9)	ø4 to ø8	1906
	SC3W-M3-4	●												●					0.4(0.3)	0.3(0.08)	27(20)	20(5.9)	ø4 to ø8	
	SC3W-M5-3	●	●										●						1.3(1.2)	1.2(0.1)	87(80)	80(6.7)	ø6 to ø25	
	SC3W-M5-4		●											●					1.3(1.2)	1.2(0.1)	87(80)	80(6.7)	ø6 to ø25	
	SC3W-M5-6		●												●				1.3(1.2)	1.2(0.1)	87(80)	80(6.7)	ø6 to ø25	
	SC3W-6-4			●										●					3.2(3.2)	2.8(0.2)	210(210)	190(13)	ø15 to ø32	
	SC3W-6-6			●											●				4.0(4.0)	3.6(0.2)	270(270)	240(13)	ø15 to ø32	
	SC3W-6-8			●												●			4	3.6	270	240	ø15 to ø32	
	SC3W-8-6				●										●				7	6.5	470	430	ø20 to ø50	
	SC3W-8-8				●											●			7.5	7	500	470	ø20 to ø50	
	SC3W-8-10				●												●		8	7	530	470	ø20 to ø50	
	SC3W-10-6					●									●				10	10	650	650	ø32 to ø75	
	SC3W-10-8					●										●			15	14	1000	930	ø32 to ø75	
	SC3W-10-10					●											●		16	15	1100	1000	ø32 to ø75	
	SC3W-10-12					●												●	16	15	1100	1000	ø32 to ø75	
	SC3W-15-10						●										●		22	22	1500	1500	ø40 to ø100	
	SC3W-15-12						●											●	24	24	1600	1600	ø40 to ø100	
● Universal with push-in fitting	SC3U-M3-3	●											●						0.45(0.35)	0.5(0.08)	31(24)	34(5.4)	ø4 to ø8	1910
	SC3U-M3-4	●												●					0.45(0.35)	0.5(0.08)	31(24)	34(5.4)	ø4 to ø8	
	SC3U-M5-3		●										●						1.4(1.4)	1.4(0.14)	95(95)	95(9.5)	ø6 to ø25	
	SC3U-M5-4		●											●					1.4(1.4)	1.4(0.14)	95(95)	95(9.5)	ø6 to ø25	
	SC3U-M5-6		●												●				1.6(1.4)	1.4(0.14)	105(95)	95(9.5)	ø6 to ø25	
	SC3U-6-4			●										●					3.2(3.2)	2.8(0.25)	215(215)	190(17)	ø15 to ø32	
	SC3U-6-6			●											●				4(3.7)	3.8(0.25)	270(245)	260(17)	ø15 to ø32	
	SC3U-6-8			●												●			4	3.8	270	260	ø15 to ø32	
	SC3U-8-6				●										●				7	6.5	475	440	ø20 to ø50	
	SC3U-8-8				●											●			7.5	7	510	475	ø20 to ø50	
	SC3U-8-10				●												●		8	7	540	475	ø20 to ø50	
	SC3U-10-8					●										●			14.5	14	985	950	ø32 to ø75	
	SC3U-10-10					●											●		16	17	1090	1150	ø32 to ø75	
	SC3U-10-12					●												●	16	18	1090	1220	ø32 to ø75	
	SC3U-15-10						●										●		22	22	1500	1500	ø40 to ø100	
	SC3U-15-12						●											●	24	24	1630	1630	ø40 to ø100	

SCP*3
CMK2
CMA2
SCM
SCG
SCA2
SCS2
CKV2
CAV2/ COVP/N2
SSD2
SSG
SSD
CAT
MDC2
MVC
SMG
MSD/ MSDG
FC*
STK
SRL3
SRG3
SRM3
SRT3
MRL2
MRG2
SM-25
ShkAbs
FJ
FK
Spd Contr
Ending

Values in ( ) are for low speed or fine speed.

Model/outline	Model No.	Port size (Rc or R)											Compatible tube O.D.							Effective cross-sectional area (mm^2)		Flow rate (ℓ/min) ANR 0.5 MPa		Cylinder bore size (mm)	Page
		M3	M5	1/8	1/4	3/8	1/2	3/4	1	1 1/4	1 1/2	2	ø1.8	ø3.2	ø4	ø6	ø8	ø10	ø12	Free flow	Controlled flow	Free flow	Controlled flow	Reference	
● Line type with push-in fitting	SCL2-04-H22												●							(0.2)	(0.15)	(13)	(10)	ø4 to ø25	1916
	SCL2-04-H42												●		●					(0.2)	(0.15)	(13)	(10)	ø4 to ø25	
	SCL2-04-H24												●		●					(0.2)	(0.15)	(13)	(10)	ø4 to ø25	
	SCL2-04-H44														●					1.9	1.9(0.2)	130	130(13)	ø4 to ø25	
	SCL2-06-H66															●				4.5	4.5(0.2)	300	130(13)	ø6 to ø40	
	SCL2-08-H66															●				6	6	400	400	ø20 to ø50	
	SCL2-08-H88																●			8	8	550	550	ø20 to ø50	
	SCL2-10-H88																●			13.5	13.5	900	900	ø32 to ø75	
	SCL2-10-H1010																	●		16.5	16.5	1100	1100	ø32 to ø75	
	SCL2-10-H1212																		●	18	18	1200	1200	ø32 to ø75	
● In/out line type with push-in fitting	SCD2-04-H22												●							-	(0.15)	-	(10)	ø4 to ø25	1916
	SCD2-04-H42												●		●					-	(0.15)	-	(10)	ø4 to ø25	
	SCD2-04-H44														●					-	1.5(0.2)	-	100(13)	ø4 to ø25	
	SCD2-06-H66															●				-	3.7(0.2)	-	250(13)	ø6 to ø40	
	SCD2-08-H66															●				-	5	-	330	ø20 to ø50	
	SCD2-08-H88																●			-	6	-	400	ø20 to ø50	
	SCD2-10-H88																●			-	11	-	750	ø32 to ø75	
	SCD2-10-H1010																	●		-	12.5	-	850	ø32 to ø75	
	SCD2-10-H1212																		●	-	13	-	900	ø32 to ø75	
● Needle valve	SCL2-N-04-H44-010														●					-	0.2	-	13	-	1920
	SCL2-N-04-H44-050														●					-	0.7	-	50	-	
	SCL2-N-06-H66-010															●				-	0.2	-	13	-	
	SCL2-N-06-H66-050															●				-	0.7	-	50	-	
	SCL2-N-06-H66-150															●				-	2.2	-	150	-	
	SCL2-N-08-H66-300															●				-	4.5	-	300	-	
	SCL2-N-08-H88-300																●			-	4.5	-	300	-	

Values in ( ) are for low speed or fine speed.

Model/outline	Model No.	Port size (Rc or R)											Compatible tube O.D.						Effective cross-sectional area (mm^2)		Flow rate (ℓ/min) ANR 0.5 MPa		Cylinder bore size (mm) Reference	Page
		M3	M5	1/8	1/4	3/8	1/2	3/4	1	1 1/4	1 1/2	2	ø3.2	ø4	ø6	ø8	ø10	ø12	Free flow	Controlled flow	Free flow	Controlled flow		
● Stainless steel anti-corrosion	SC3P-M5-4		●											●					0.9	1.1	55	70	ø6 to ø25	1926
	SC3P-M5-6		●												●				0.9	1.1	55	70	ø6 to ø25	
	SC3P-6-4			●										●					3	2.3	200	150	ø15 to ø32	
	SC3P-6-6			●											●				3	2.3	200	150	ø15 to ø32	
	SC3P-6-8			●												●			3.5	2.3	230	150	ø15 to ø32	
	SC3P-8-6				●										●				5.9	4	390	270	ø20 to ø50	
	SC3P-8-8				●											●			6	4	400	270	ø20 to ø50	
	SC3P-8-10				●												●		6	4	400	270	ø20 to ø50	
	SC3P-10-6					●									●				9	8	600	550	ø32 to ø75	
	SC3P-10-8					●										●			12	12.8	800	850	ø32 to ø75	
	SC3P-10-10					●											●		12	14	800	920	ø32 to ø75	
	SC3P-10-12					●												●	12.5	14	840	920	ø32 to ø75	
	SC3P-15-8						●									●			17	16.5	1140	1100	ø40 to ø100	
	SC3P-15-10						●										●		21	22	1380	1450	ø40 to ø100	
	SC3P-15-12						●											●	21	24	1380	1600	ø40 to ø100	
● Direct port/ elbow	SC3R-M5		●																1.2	0.7	80	47	ø6 to ø16	1930
	SC3R-6			●															4.0	3.6	270	240	ø15 to ø32	
	SC3R-8				●														7.5	7	500	470	ø20 to ø50	
	SC3R-10					●													16	15	1100	1100	ø32 to ø75	
	SC3R-15						●												24	24	1600	1600	ø40 to ø110	
● Miniature speed controller	SC-M3	●																	0.3	0.25	20	16	ø2.5 to ø10	1932
	SC-M5		●																0.8	0.7(0.1)	53	47(6.7)	ø6 to ø25	
● Miniature meter-in meter-out speed controller	SCD-M3	●																	0.2		13		ø4 to ø8	1934
	SCD-M5		●																0.55(0.1)		37(6.7)		ø6 to ø25	
● Medium bore size Rc1/8 to Rc1/2	SC1-6			●															11	8	730	530	ø20 to ø50	1938
	SC1-8				●														14	13	930	870	ø32 to ø75	
	SC1-10					●													39	22	2600	1500	ø50 to ø140	
	SC1-15						●												43	36	2900	2400	ø80 to ø160	
● Large bore size Rc3/4 to Rc2	SC-20A							●											155	125	10300	8300	ø100 to ø200	1940
	SC-25A								●										260	280	17400	18700	ø140 to ø250	
	SC-32A									●									1000	1000	68000	68000	ø300 to ø450	
	SC-40A										●								1000	1000	68000	68000	ø300 to ø450	
	SC-50A											●							1500	1400	97000	91000	ø450 to	
● Outdoor Series Medium bore size Rc1/4 to Rc1/2	SC1-8-W					●													14	13	930	870	ø32 to ø75	1942
	SC1-10-W						●												39	22	2600	1500	ø50 to ø140	
	SC1-15-W							●											43	36	2900	2400	ø80 to ø160	

SCP*3
CMK2
CMA2
SCM
SCG
SCA2
SCS2
CKV2
CAV2/COVP/N2
SSD2
SSG
SSD
CAT
MDC2
MVC
SMG
MSD/MSDG
FC*
STK
SRL3
SRG3
SRM3
SRT3
MRL2
MRG2
SM-25
ShkAbs
FJ
FK
Spd Contr
Ending

Flow rate can be seen!

An inline type is added to the speed controller featuring a dial with linear flow characteristics

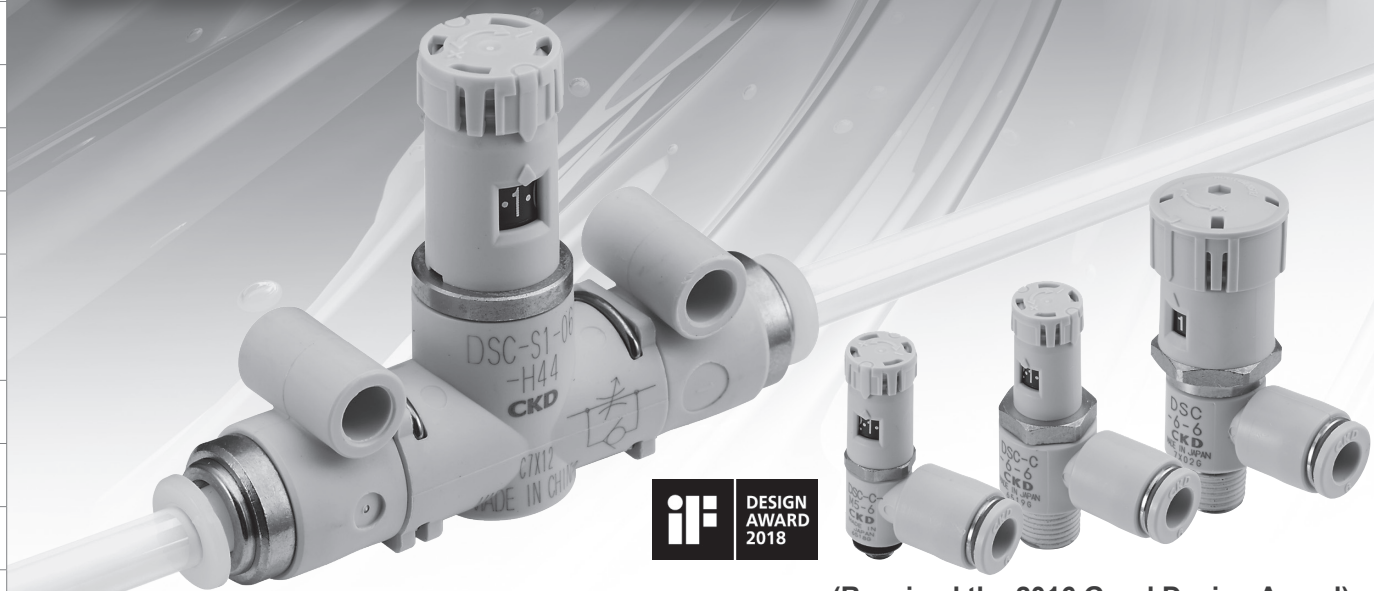

DESIGN AWARD 2018

(Received the 2016 Good Design Award)

Inline

Unrestricted mounting

The mounting area rotates by 360 degrees, enabling mounting and installation from the base, side, or panel, and no mounting bracket is required.

Example of base mounting

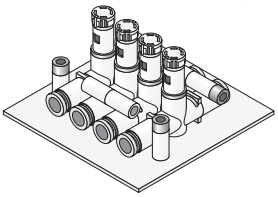

Example of wall mounting

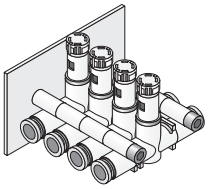

Example of panel mounting

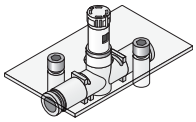

Dial display direction can be selected

The dial display direction can be selected according to the installation direction.

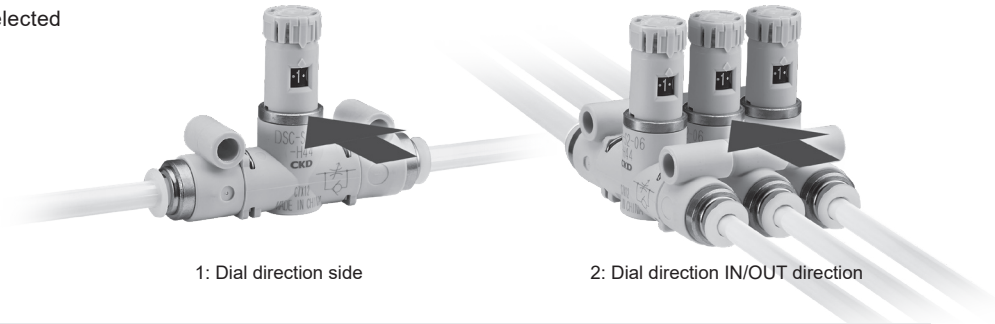

1: Dial direction side

2: Dial direction IN/OUT direction

Usage examples

Purge gas flow rate adjustment

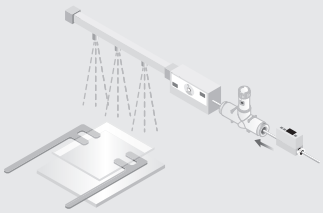

Vacuum burst flow rate adjustment using vacuum suction

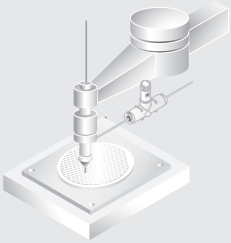

Driving cylinder

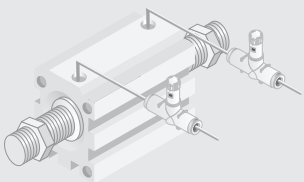

Air knife

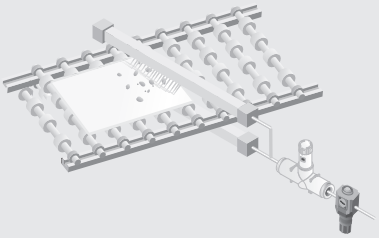

Compact

Industry's smallest size *

Use of a small dial allows installation on the speed controller cylinder without interfering with the ground surface of the cylinder. (PAT.)

* October 2015, CKD research.

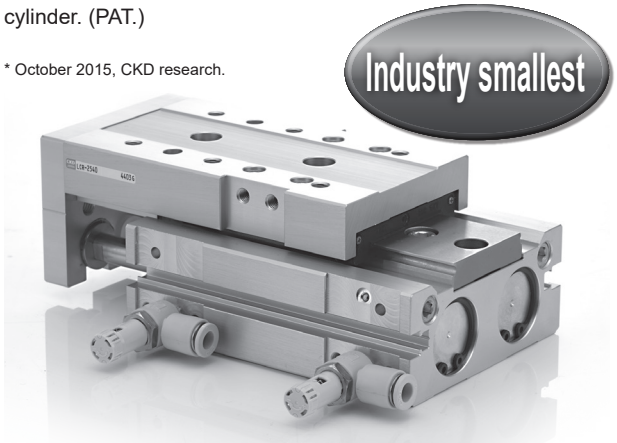

Inline | Compact | Standard

Flow characteristics in proportion to dial value (needle position)

Thanks to the optimal design of the needle, linear flow characteristics proportional to the dial value (needle position) are achieved and cylinder speed setting is made easy.
Flow rate barely varies and can be reset by simply setting the dial to the same value during replacement.
Job-hours can be significantly reduced and misalignments prevented.

[Flow characteristics]

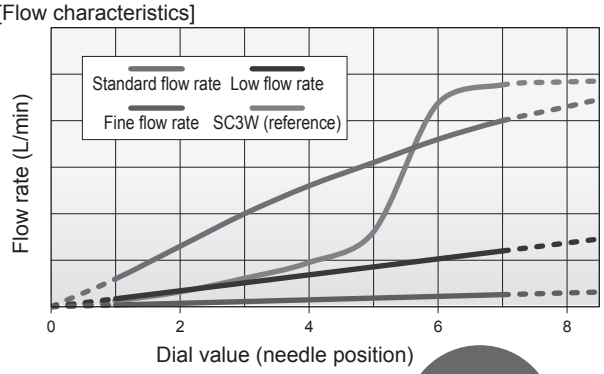

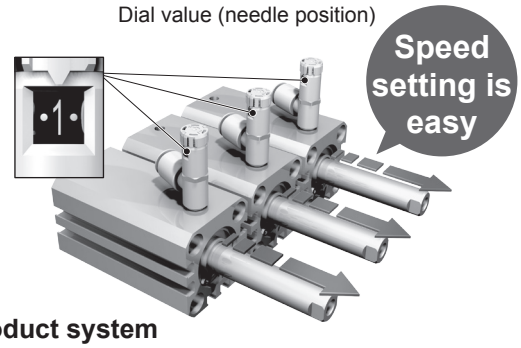

Inline | Compact

Finer quantification is achieved

Indicator displays the number of dial rotations in increments of 0.5.

Finer quantification is now possible.

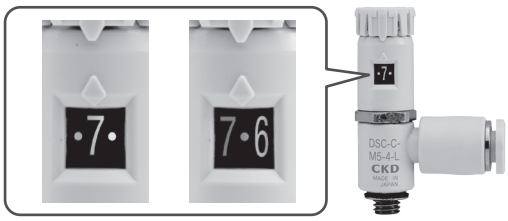

Operability has been improved

With "clicks" that can be felt with your fingertips, each 0.5 turn of the knob can now be confirmed even in situations where the dial display cannot be visually inspected.

Inline | Compact | Standard

Easy adjustment

Push locking method is used for fixing the needle.
Adjustment is easy with simple operation.

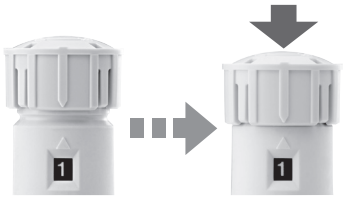

Knob features rotation position indicators

Easy management of cylinder speed values.

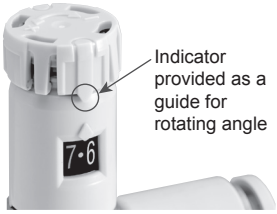

Speed of rotation can be checked from two surfaces

Dial display is visible from front and back.

Product system

Model variations			Tube O.D.	Port size/body size
			ø3.2, ø4, ø6, ø8, ø10, ø12	M5, R1/8, R1/4, R3/8, R1/2, 06, 08, 10
Compact	Elbow	Standard flow rate DSC-C-*-*	ø6 – ø8	M5, R1/8
		Low flow rate DSC-C-*-*-L		
		Fine flow rate DSC-C-*-*-F	ø4 – ø6	M5, R1/8
	Inline	Standard flow rate DSC-S*-*-*	ø4 – ø10	06, 08, 10
		Low flow rate DSC-S*-*-*-L		
		Fine flow rate DSC-S*-*-*-F	ø4 – ø6	06
Standard	Elbow	Standard flow rate DSC-*-*	ø6 – ø10	R1/8, R1/4, R3/8, R1/2
		Low flow rate DSC-*-*-L		

Speed controller with adjusting dial

DSC Series

● Port size: M5, R1/8 to R1/2

JIS symbol 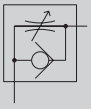 (Meter-out) 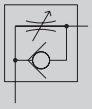 (Meter-in)

RoHS

Specifications

● Compact

Item		DSC-C-M5			DSC-C-6		
Compatible tube O.D. mm		ø3.2	ø4	ø6	ø4	ø6	ø8
Port size		M5			R1/8		
Working fluid		Compressed air					
Max. working pressure MPa		1.0 (≈150 psi, 10 bar)					
Min. working pressure MPa		0.05 (≈7.3 psi, 0.5 bar)					
Proof pressure MPa		1.5 (≈220 psi, 15 bar)					
Fluid temperature °C		5 (41°F) to 60 (140°F) (no freezing. *2)					
Ambient temperature °C		0 (32°F) to 60 (140°F) (no freezing)					
Needle control range		1 to 7 rotations					
Weight g		10.5	11.5	12	22	23	24
Free flow	Flow rate ℓ/min(ANR)	87	100		210	270	
	Eff. X-sectional area mm^2	1.3	1.5		3.2	4	
Controlled flow (Standard flow rate)	Flow rate ℓ/min(ANR)	60			160	200	
	Eff. X-sectional area mm^2	0.9			2.4	3	
Controlled flow (Low flow rate)	Flow rate ℓ/min(ANR)	20			60		
	Eff. X-sectional area mm^2	0.3			0.9		
Controlled flow (fine flow rate)	Flow rate ℓ/min(ANR)	-	6.7		13		-
	Eff. X-sectional area mm^2	-	0.1		0.2		-

● Standard

Item		DSC-6			DSC-8			DSC-10				DSC-15	
Compatible tube O.D. mm		ø4	ø6	ø8	ø6	ø8	ø10	ø6	ø8	ø10	ø12	ø10	ø12
Port size		R1/8			R1/4			R3/8				R1/2	
Working fluid		Compressed air											
Max. working pressure MPa		1.0 (≈150 psi, 10 bar)											
Min. working pressure MPa		0.05 (≈7.3 psi, 0.5 bar)											
Proof pressure MPa		1.5 (≈220 psi, 15 bar)											
Fluid temperature °C		5 (41°F) to 60 (140°F) (no freezing. *2)											
Ambient temperature °C		0 (32°F) to 60 (140°F) (no freezing)											
Needle control range		1 to 10 rotations											
Weight g		33	34	35	45	46	48	60	61	64	65	95	97
Free flow	Flow rate ℓ/min(ANR)	210	270		470	530		670	1000	1070		1470	1600
	Eff. X-sectional area mm^2	3.2	4		7	8		10	15	16		22	24
Controlled flow (Standard flow rate)	Flow rate ℓ/min(ANR)	160	200		320	400		400	700	800		1120	1200
	Eff. X-sectional area mm^2	2.4	3		5	6		6	10.5	12		17	17.5
Controlled flow (Low flow rate)	Flow rate ℓ/min(ANR)	60			130			270				400	
	Eff. X-sectional area mm^2	0.9			2			4				6	

*1: Flow rate is the atmospheric pressure conversion value at pressure 0.5 MPa.
*2: Freezing may occur due to adiabatic expansion depending on the air quality (dew point).

Specifications for rechargeable battery

● Structure suitable for use in general assembly during the rechargeable battery manufacturing process.

DSC - ····· - P4

Clean-room specifications

● Anti-dust generation structure for use in clean rooms.

DSC - ····· - P70

How to order

DSC -C - 6 - 6 - I L

- Ⓐ Product size
- Ⓑ Port size
- Ⓒ Compatible tube O.D.
- Ⓓ Control method
- Ⓔ Flow rate

Code	Description
Ⓐ Product size	
Blank	Standard
-C	Compact
Ⓑ Port size	
M5	M5
6	R1/8
8	R1/4
10	R3/8
15	R1/2
Ⓒ Compatible tube O.D.	
3	ø3.2
4	ø4
6	ø6
8	ø8
10	ø10
12	ø12
Ⓓ Control method	
Blank	Meter-out
I	Meter-in (Push ring color: black)
Ⓔ Flow rate	
Blank	Standard flow rate
L	Low flow rate
F	Fine flow rate (compact only)

Port size - compatible tube O.D. - flow rate combination

Ⓐ Product size	Compact		Standard			
Ⓑ Port size	**M5**	**R1/8**	**R1/8**	**R1/4**	**R3/8**	**R1/2**
ø3.2	○					
ø4	◎	◎	○			
ø6	◎	◎	○	○	○	
ø8		○	○	○	○	
ø10				○	○	○
ø12					○	○

○: Flow rate “F” (fine flow rate) cannot be selected
◎: Flow rate “F” (fine flow rate) can be selected

Flow characteristics

● Compact

●DSC-C-M5-*

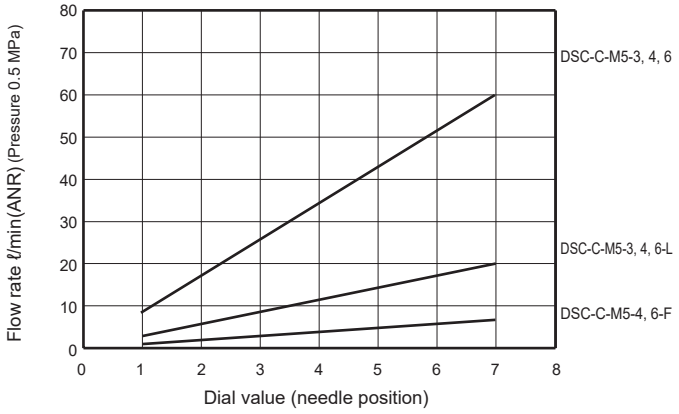

●DSC-C-6-*

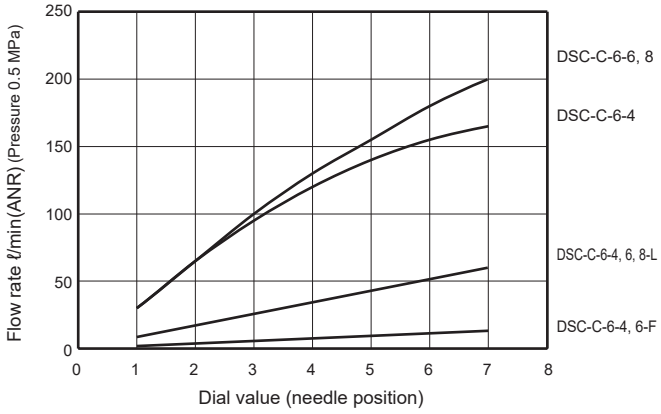

● Standard

●DSC-6-*

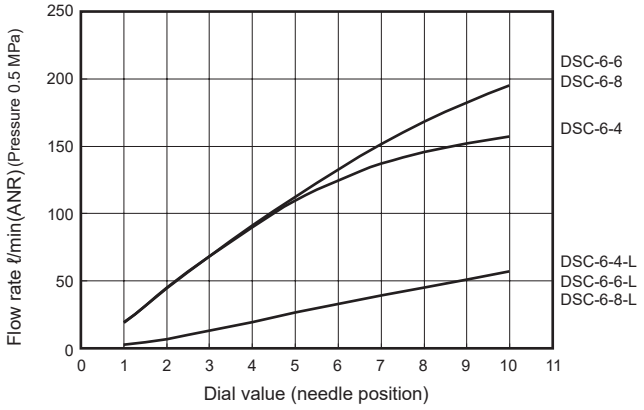

●DSC-8-*

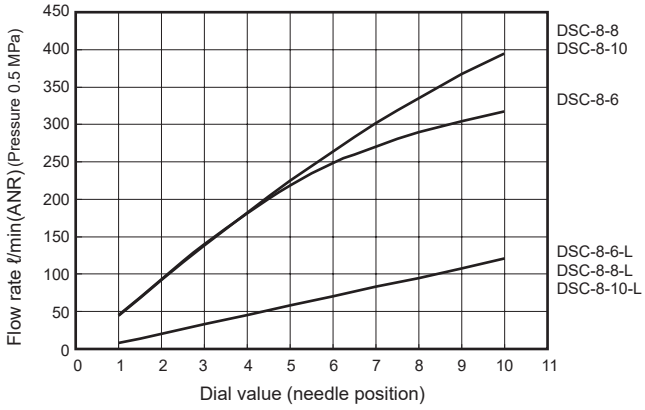

●DSC-10-*

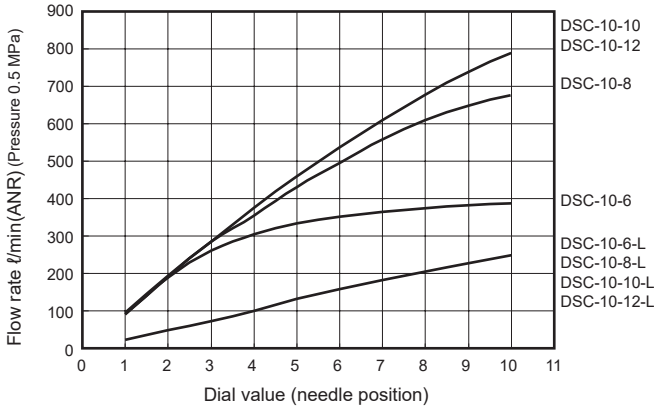

●DSC-15-*

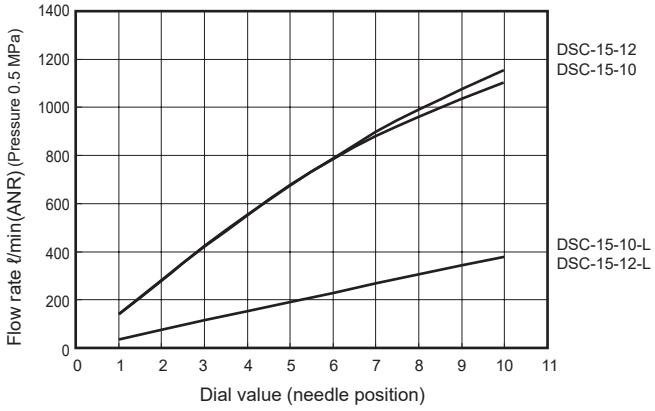

Note: The flow characteristics may differ depending on the piping conditions around the unit and the temperature change.

Internal structure and parts list

● Compact

●DSC-C-M5-4, 6

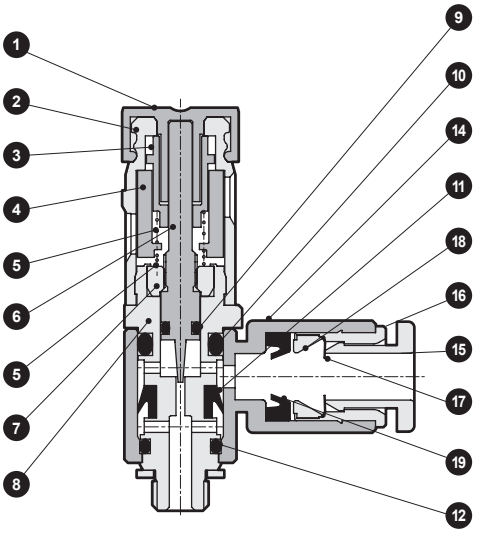

●DSC-C-M5-3

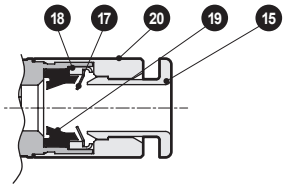

●DSC-C-6-*

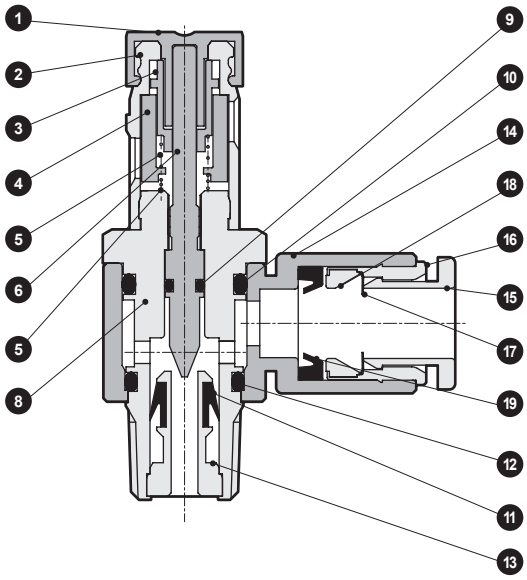

No.	Part name	Material	No.	Part name	Material
1	Knob	Polyacetal	11	Packing	Hydrogenated nitrile rubber
2	Gear cover	Polybutylene terephthalate	12	O-ring	Nitrile rubber
3	Slide gear	Polybutylene terephthalate	13	Check part	Copper alloy
4	Indication ring	Polybutylene terephthalate	14	Rotor	Polybutylene terephthalate
5	Spring	Stainless steel	15	Push ring	Polybutylene terephthalate
6	Needle	Stainless steel	16	Outer ring	Copper alloy
7	Gland nut	Copper alloy	17	Chuck	Stainless steel
8	Rotary shaft	Copper alloy	18	Chuck holder	Polyether sulfone (Copper alloy) *1
9	O-ring	Nitrile rubber	19	Packing	Nitrile rubber
10	O-ring	Nitrile rubber	20	Fitting body	Copper alloy

*1: Values shown in ( ) are when DSC-C-M5-3 is selected
*2: All the copper alloy parts have electroless nickel plating.

● Standard

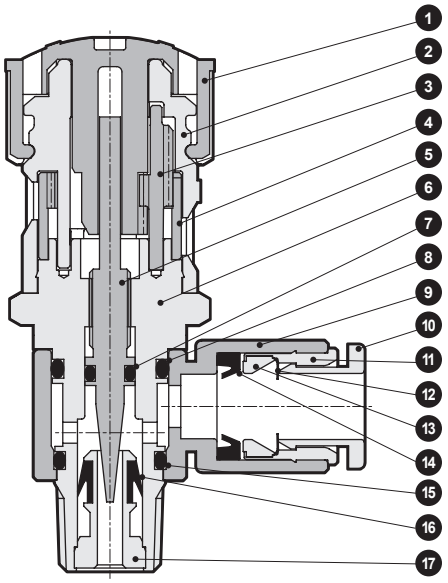

No.	Part name	Material
1	Knob	Polyacetal
2	Gear cover	Polybutylene terephthalate
3	Gear	Stainless steel
4	Indication ring	Polyacetal
5	Needle	Stainless steel
6	Rotary shaft	Copper alloy
7	O-ring	Nitrile rubber
8	O-ring	Nitrile rubber
9	Rotor	Polybutylene terephthalate
10	Push ring	Polybutylene terephthalate
11	Outer ring	Copper alloy
12	Chuck	Stainless steel
13	Chuck holder	polyether sulfone
14	Packing	Nitrile rubber
15	O-ring	Nitrile rubber
16	Packing	Hydrogenated nitrile rubber
17	Check part	Copper alloy

*1: All the copper alloy parts have electroless nickel plating.

Dimensions

● Compact

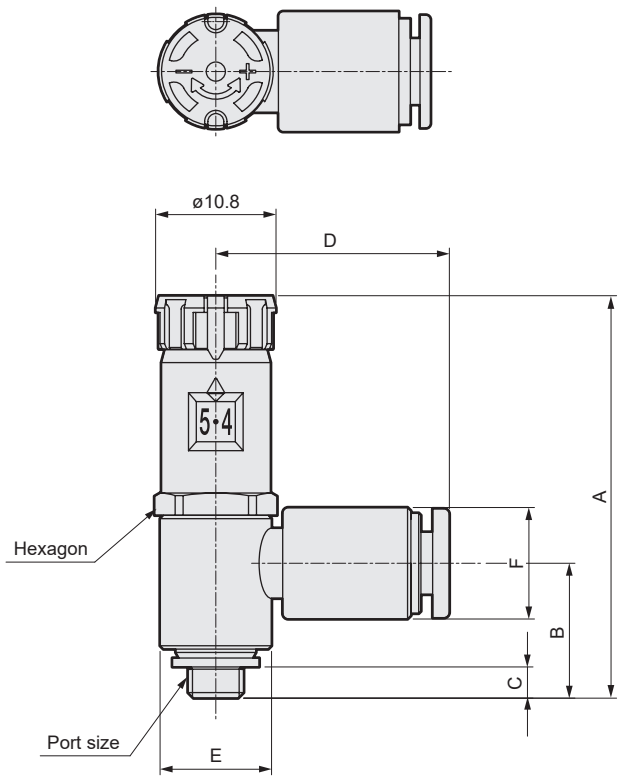

● Standard

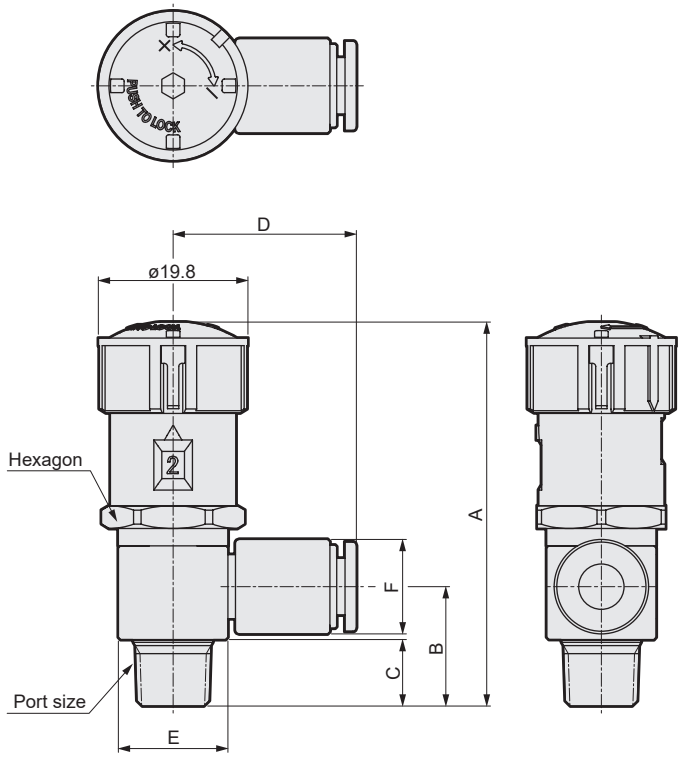

Model No.	Product size	Port size	Compatible tube O.D.	A When locked	A At adjustment	B	C	D	E	F	Hexagon
DSC-C-M5-3	Compact type	M5x0.8	ø3.2	36	37.5	11.9	3	16.5	10	7.5	10
DSC-C-M5-4			ø4			11.9		21		10	
DSC-C-M5-6			ø6			11.7		22.5		12.5	
DSC-C-6-4		R1/8	ø4	41.9	43.4	16.2	8.7	23.5	14.5	10	13
DSC-C-6-6			ø6			15.7		24.5		12.5	
DSC-C-6-8			ø8			15.4		26		14.5	
DSC-6-4	Standard type	R1/8	ø4	51	54	16.2	8.7	23.5	14.5	10	17
DSC-6-6			ø6			15.7		24.5		12.5	
DSC-6-8			ø8			15.4		26		14.5	
DSC-8-6		R1/4	ø6	55.5	58.5	20	11.7	26	18	12.5	17
DSC-8-8			ø8			19		27.5		14.5	
DSC-8-10			ø10			19		30.5		17.5	
DSC-10-6		R3/8	ø6	58	61	23.1	12.7	28.5	22.5	12.5	19
DSC-10-8			ø8			21.3		30		14.5	
DSC-10-10			ø10			21.8		32		17.5	
DSC-10-12			ø12			21.7		33.5		20	
DSC-15-10		R1/2	ø10	63	66	25.2	15.7	34.5	27.5	17.5	24
DSC-15-12			ø12			25.7		36		20	

MEMO

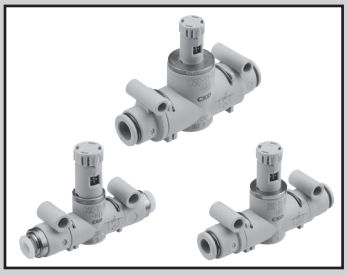

Inline speed controller with adjusting dial

DSC-S Series

● Port size: ø4, ø6, ø8, ø10, ø12

JIS symbol 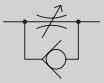

RoHS

Specifications

1 MPa ≈ 145.0 psi, 1 MPa = 10 bar

Item			DSC-S□-06		DSC-S□-08		DSC-S□-10		
Compatible tube O.D.		mm	ø4	ø6	ø6	ø8	ø8	ø10	ø12
Working fluid			Compressed air						
Max. working pressure		MPa	1.0 (≈145 psi, 10 bar)						
Min. working pressure		MPa	0.1 (≈15 psi, 1 bar)						
Proof pressure		MPa	1.5 (≈217 psi, 15 bar)						
Fluid temperature		°C	5 (41°F) to 60 (140°F) (no freezing *2)						
Ambient temperature		°C	0 (32°F) to 60 (140°F) (no freezing)						
Needle control range			1 to 7 rotations						
Weight		g	24	18	30	31	52	57	60
Free flow	Flow rate	L/min (ANR)	170	300	400	550	900	1100	1200
	Effective cross-sectional area	mm^2	2.5	4.5	6	8	13.5	16.5	18
Controlled flow (Standard flow rate)	Flow rate	L/min (ANR)	160	200	360	400	710	780	780
	Effective cross-sectional area	mm^2	2.4	3	5	6	10.5	12	12
Controlled flow (Low flow rate)	Flow rate	L/min (ANR)	60		130		270		
	Effective cross-sectional area	mm^2	0.9	0.9	2	2	4	4	4
Controlled flow (fine flow rate)	Flow rate	L/min (ANR)	13		–	–	–	–	–
	Effective cross-sectional area	mm^2	0.2	0.2	–	–	–	–	–

*1: Flow rate is the atmospheric pressure conversion at 0.5 MPa.
*2: Freezing may occur due to adiabatic expansion depending on the air quality (dew point).

How to order

DSC –S 1 - 06 - H66 - L

Ⓐ Product
Ⓑ Dial direction
Ⓒ Body size
Ⓓ Compatible tube O.D.
Ⓔ Flow rate

Code	Description
Ⓐ Product	
–S	Inline
Ⓑ Dial direction	
1	Side
2	IN/OUT direction
Ⓒ Body size	
06	1/8 thread equivalent
08	1/4 thread equivalent
10	3/8 thread equivalent
Ⓓ Compatible tube O.D.	
H44	ø4
H66	ø6
H88	ø8
H1010	ø10
H1212	ø12
Ⓔ Flow rate	
Blank	Standard flow rate
L	Low flow rate
F	Fine flow rate

Combination of body, compatible tube O.D., and flow rate

	Ⓒ Body size						
	06		08		10		
Ⓓ Compatible tube O.D. / Ⓔ Flow rate	H44	H66	H66	H88	H88	H1010	H1212
Blank	●	●	●	●	●	●	●
L	●	●	●	●	●	●	●
F	●	●					

Flow characteristics

● DSC-S□-06-*

Standard flow rate, low flow rate, fine flow rate

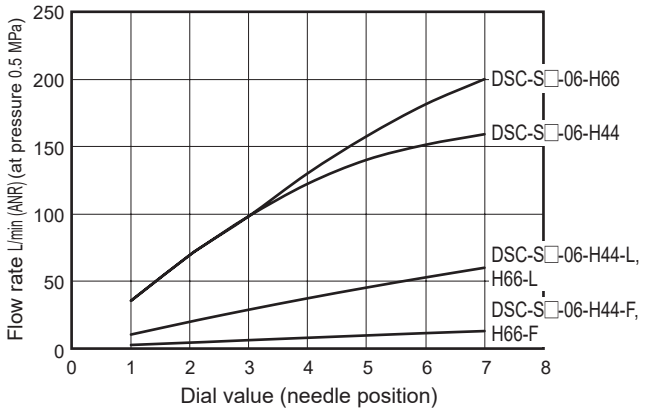

● DSC-S□-08-*

Standard flow rate, low flow rate

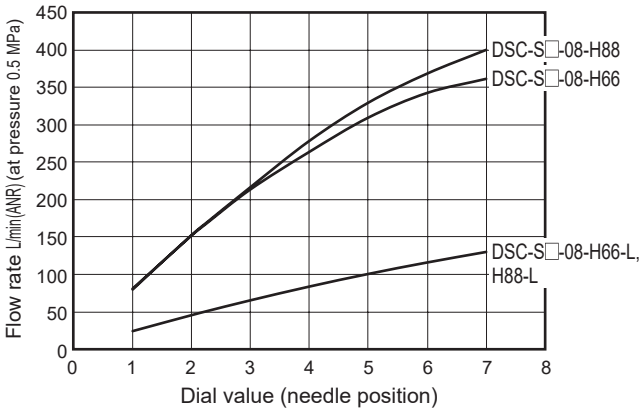

● DSC-S□-10-*

Standard flow rate, low flow rate

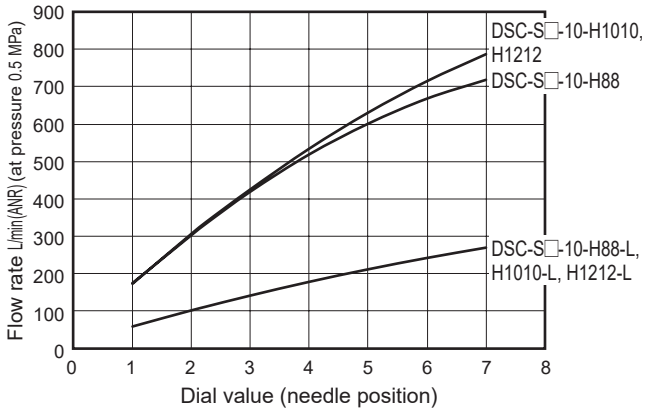

SCP*3
CMK2
CMA2
SCM
SCG
SCA2
SCS2
CKV2
CAV2/COVP/N2
SSD2
SSG
SSD
CAT
MDC2
MVC
SMG
MSD/MSDG
FC*
STK
SRL3
SRG3
SRM3
SRT3
MRL2
MRG2
SM-25
ShkAbs
FJ
FK
Spd Contr
Ending

Internal structure and parts list

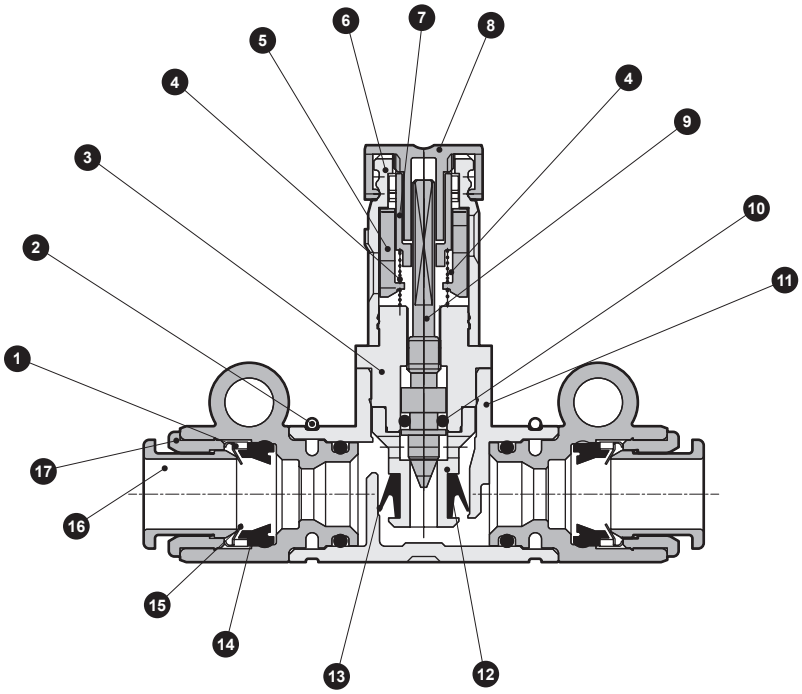

No.	Part name	Material
1	Holder	Copper alloy or Polyether sulfone
2	Stopper ring	Stainless steel
3	Needle guide	Copper alloy
4	Spring	Stainless steel
5	Indication ring	Polybutylene terephthalate
6	Gear cover	Polybutylene terephthalate
7	Slide gear	Polybutylene terephthalate
8	Knob	Polyacetal
9	Needle	Stainless steel
10	O-ring	Nitrile rubber
11	Body	Polybutylene terephthalate
12	Check bracket	Copper alloy
13	Check packing	Hydrogenated nitrile rubber
14	Packing	Nitrile rubber
15	Chuck	Stainless steel
16	Push ring	Polybutylene terephthalate
17	Outer ring	Copper alloy

*1: All the copper alloy parts have electroless nickel plating.

Dimensions

●Dial direction; side (S1)

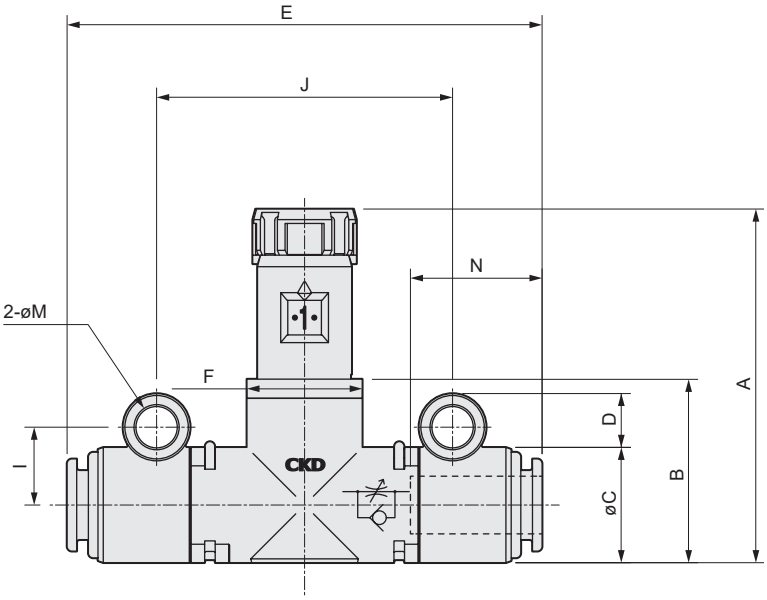

●Mounting pitch dimension for manifold

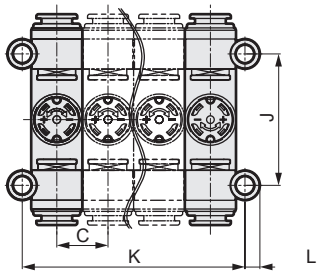

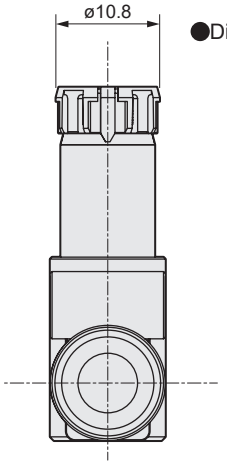

●Dial direction; IN/OUT direction (S2)

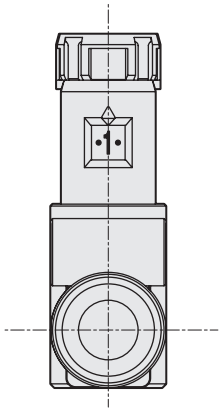

Model No.	Connection tube O.D.	A When locked	A During adjustment	B	C	D	E	F	I	J	K	L	M (Mounting hole diameter)	N (Tube insert length)
DSC-S□-06-H44	ø4	36.8	38.3	19.1	12	5.6	54.6	12	8.1	30.8	12 x n+4.2	3.5	4.3	12.9
DSC-S□-06-H66	ø6						49.4							13.7
DSC-S□-08-H66	ø6	41.9	43.4	24.2	15	5.6	63.1	15	9.5	40.8	15 x n+4	3.6		18
DSC-S□-08-H88	ø8						66.3							19
DSC-S□-10-H88	ø8	48.4	49.9	30.7	20	5.1	70.8	19.4	11.5	47	20 x n+3			19
DSC-S□-10-H1010	ø10						75.4							21
DSC-S□-10-H1212	ø12						79.6				20.4 x n+3			22

Pneumatic components Warnings/cautions

Be sure to read this section before use.
Refer to "Pneumatic, Vacuum and Auxiliary Components (No. CB-024SA)" for general precautions for pneumatic components.

Product-specific cautions: Speed controller with dial

Design/selection

WARNING

■ Do not constantly push down or apply load onto the push ring for the push-in fitting.
- The tube may lose its holding capacity.
- When transporting an assembled product, avoid positions where the push ring is constantly pushed down.

CAUTION

■ This valve cannot be used as a stop valve that requires zero leakage.
Slight leakage is allowed for in this product's specifications.

■ Note that the flow rate may differ from the values on pages 1888 and 1893 depending on the piping conditions around the unit and the temperature changes.

■ Do not use this valve in circuits where ozone is generated intentionally.
Ozone resistance is sufficient for naturally occurring ambient ozone. Packing deteriorates if ozone levels are high.

■ This product is used for compressed air. Do not use with other fluids.

■ Use the product in the range of conditions specified for the product.
Contact CKD when using the product outside specifications or for special applications.
- Use of the product outside the specifications range may result in insufficient performance, and its safety cannot be guaranteed.
- This product may not be usable in special applications and environments.
  For example, use in applications requiring safety, including nuclear energy, railways, aircraft, vehicles, medical devices, devices in contact with beverages or foodstuffs, amusement devices, emergency cutoff circuits, press machines, brake circuits, or safety devices or applications.

■ Confirm before use that the product will withstand the working environment.
- This product cannot be used in environments where functional obstacles could occur.
  Such environments include high temperatures, chemical atmospheres, or where chemical liquids, vibration, moisture, water dripping or gas is present.
  Environments where ozone is generated.
- Do not use the product in a place where it could come in direct contact with coolant, spatter, etc.

■ Understand the characteristics of compressed air before designing a pneumatic circuit.
- The same functions as mechanical, hydraulic and electrical methods cannot be anticipated if instantaneous stopping and holding are required during an emergency stop.
- Pop-out, air discharge, or leakage due to air compression and expansion may occur.

■ Install a “pressure switch” and “residual pressure exhaust valve” on the device’s compressed air supply side.
- The pressure switch will disable operation until the set pressure is reached. The residual pressure exhaust valve releases compressed air into the pneumatic pressure circuit to prevent accidents caused by operation of pneumatic components under residual pressure.

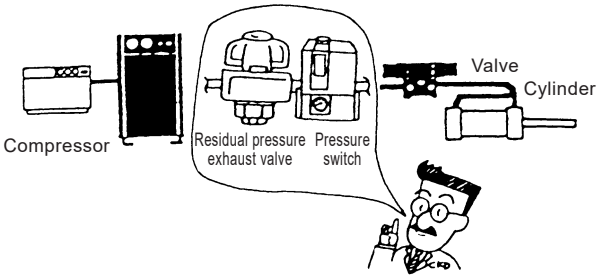

■ Confirm whether PTFE can be used.The sealant contains PTFE (polytetrafluoroethylene resin) powder. Check that this poses no problems during use.

■ Indicate the maintenance conditions in the device’s instruction manual.
- The product’s performance may drop too low to maintain an appropriate safety level depending on usage conditions, working environment and maintenance status. With correct maintenance, the product functions can be used to the fullest.

■ Consult with CKD if ozone is generated in the supplied air.

■ Rubber parts will deteriorate, shortening product life, if ultra dry air is used.

Mounting, installation and adjustment

⚠ CAUTION

■ The needle lock is released when the knob is pulled, and locked when it is pushed.

■ To adjust the flow rate, turn the knob to the right to close or the left to open.

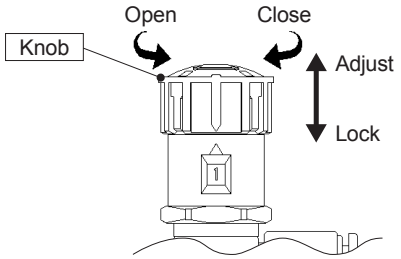

● When opened by rotating the knob on the left hand side, the rotary direction of the dial display is clockwise for standard and counterclockwise for compact.

■ Do not rotate the knob too fast.

● This may result in a distorted dial display or malfunctions.

■ Do not apply rotation torque to the dial display.

● This may result in distorted flow characteristics or malfunctions.

■ After adjustment, push the knob to lock the needle.

■ Controllable range of the needle is from 1 to 7 or 1 to 10 turns; operate with a maximum of 0.05 N·m torque.

Turning the knob beyond the range forcibly may result in distorted flow characteristics or malfunctions.

■ Even when the needle is fully closed, the dial display is not 0.

Calibration of the dial indicator flow rate is performed when the needle is not fully closed. Note that 0 is not necessarily indicated when the needle is fully closed. Beyond "0", "-" is displayed.

■ Rotate the mounting hole section in the non-pressurized state.

■ When mounting on a panel, the stopper ring will interfere with the panel, so insert a flat washer between the mounting hole and panel. (DSC-S)

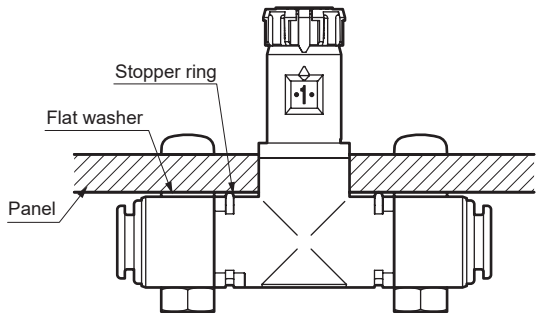

■ Tighten bolts in mounting holes using a torque of 0.8 N·m or less.

■ As tubing may be dislocated due to product oscillation or torsion, fix the product with bolts or Insulok ties, etc., when piping.

■ Fully close the needle, and then open to adjust speed.

● Adjusting with the needle open could cause the actuator to pop out, which is dangerous. Ensure that it is closed and then open it.

● The needle closes when turned to the right and opens when turned to the left.

■ Check the flow direction with the JIS symbol.

If installed in reverse, speed adjustment will not function and the actuator could pop out suddenly, creating a hazard.

■ Confirm the final speed for each usage.

Confirm the final speed after each usage as the variability between products, actuators, conditions of use and ambient temperatures will cause deviations.

■ Install a pneumatic filter before the circuit.

Flow rate will fluctuate due to clogging and foreign matter in the orifice.

■ Use the specified tightening torque (Table 1-(1)) when connecting pipes. To additionally tighten to adjust the position of the rotation indicator window, use the torque in (Table 1-(2)).

Do not hold the knob when piping. Doing so may cause failures. Note that the port size M5 cannot be aligned by additional tightening.

Thread size	(1) Piping (N·m)	(2) Additional tightening (N·m)
M5	1.0 to 1.5	–
R1/8	3 to 5	9 or less
R1/4	6 to 8	14 or less
R3/8	13 to 15	24 or less
R1/2	16 to 18	30 or less

Tightening torque of port thread (Table 1)

■ Securely insert the tube until it contacts the fitting tube end and check that it does not come off the fitting.

■ Do not remove the package or seal cap on the piping port until just before piping the product.

● Removing the piping port cap before piping work may cause foreign matter to enter the pneumatic components from the piping port, resulting in failure or malfunction.

■ When connecting pipes, wrap sealant tape in the opposite direction from the threading, from the inside position to within 2 mm from the pipe end.
- If sealant tape protrudes from the pipe threads, it could be cut when screwing the bolts in. This could cause the tape to enter the valve, causing failures.

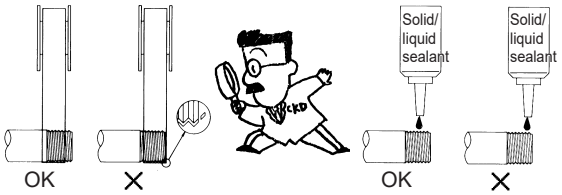

■ Handling push-in fittings and tubes
- For handling push-in fittings and tubes, refer to the warnings and cautions for fittings and tubes in "Pneumatic/Vacuum/Auxiliary Components (No. CB-024SA)".

■ Always flush just before piping pneumatic components.
- Any foreign matter that has entered during piping must not enter the pneumatic components.

■ When supplying compressed air after connecting pipes, do not suddenly apply high pressure.
- The pipe connection could dislocate, causing the pipe to fly off, leading to accidents.

■ Before supplying compressed air upon connecting pipes, be sure to check for air leaks at the pipe connections.
- Apply a leakage detection agent to pipe connections with a brush and check for air leaks.

■ Connect the piping so that connections are not dislocated by equipment movement, vibration, tension, etc.
- Control of actuator speed will be disabled if piping on the exhaust side of the pneumatic circuit is disengaged.
- When using a chuck holding mechanism, the chuck may be released, creating a hazardous state.

■ Around the pneumatic components, keep space for mounting, removal and piping work.

■ Install a pneumatic filter just before the pneumatic component in the circuit.

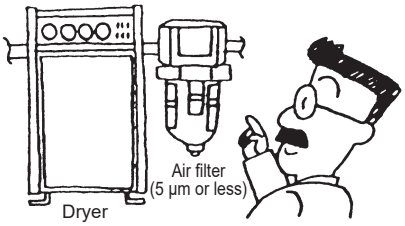

■ Avoid using the product for applications that involve rotation or oscillation.
- Fittings could be damaged.

■ Do not apply lateral load to the body during or after installation.

■ Avoid use in areas with large vibration or impact.

Use/maintenance

⚠ WARNING

■ Before maintenance, stop the air flow and confirm that no pressure remains.

Visualizing flow rate adjustment and control

SCP*3
CMK2
CMA2
SCM
SCG
SCA2
SCS2
CKV2
CAV2/ COVP/N2
SSD2
SSG
SSD
CAT
MDC2
MVC
SMG
MSD/ MSDG
FC*
STK
SRL3
SRG3
SRM3
SRT3
MRL2
MRG2
SM-25
ShkAbs
FJ
FK
Spd Contr
Ending

The needle valve with dial DVL-S and DVL-N uses a needle valve with linear flow characteristics, and numerically displays the needle position with the number of rotations of the dial.
Anyone can easily adjust cylinder speed and flow rate accurately and with good reproducibility using this needle valve.

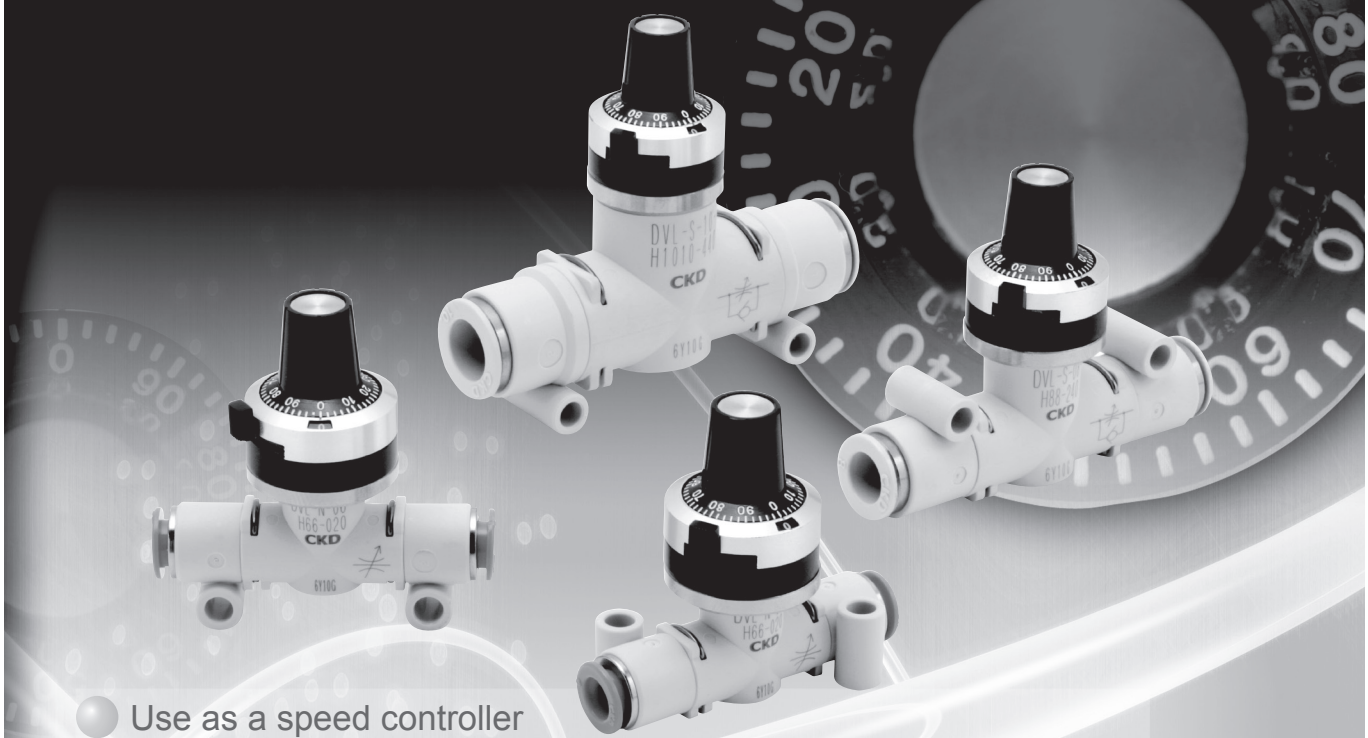

Use as a speed controller

The standard type has a built-in check valve, and can be used as a speed adjustment valve or vacuum break valve for pneumatic cylinders.

Oil-prohibited specifications available

These specifications enable use in environments susceptible to oil, in clean rooms, and in vacuum applications.

- Adjustment of ionizer purge gas flow rate
- Adjustment of vacuum break flow rate in vacuum pickup processes
- Cylinder drive
- Air knife
- Transfer of LCD substrates (non-contact)

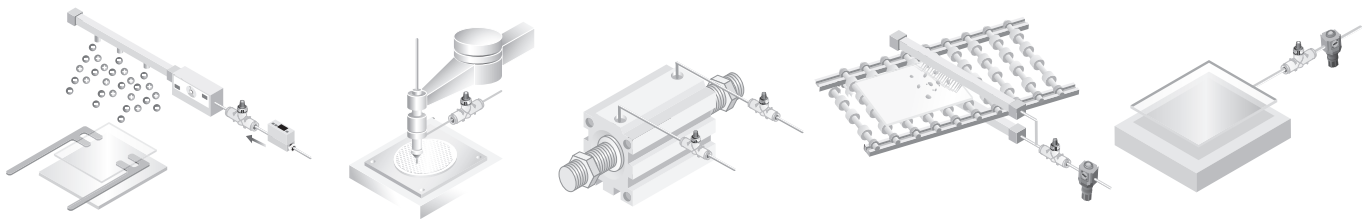

DVL Series

Industry's first needle valve with dial

Linear flow characteristics
Linear flow characteristics in proportion to the needle position

Example of flow characteristics

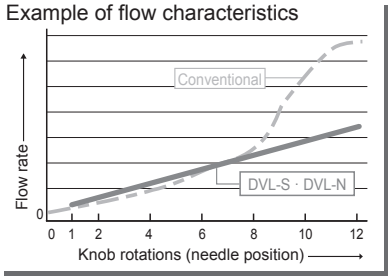

Displays the needle position via dial rotations
The needle position is numerically displayed with the dial.

Visual control of flow rates
The flow rate is controlled easily and visually with the dial display.
Work manuals are now quantifiable.

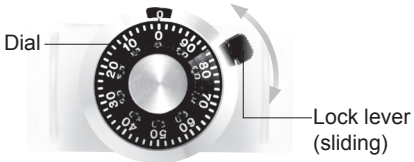

Prevent adjustment errors
Anyone can easily and accurately adjust values.
High reproducibility prevents adjustment errors.

Easy locking
The needle is fixed with the sliding lock lever, making adjustment work even easier.

Reduce man-hours
Adjustment work is done quickly, greatly reducing the number of man-hours for setup.

Unrestricted installation
The installation section rotates 360°, enabling mounting and installation to be selected freely from the base, side, or panel mounting. No mounting bracket is needed.

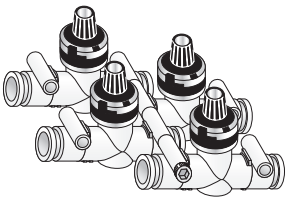
●Example of manifold

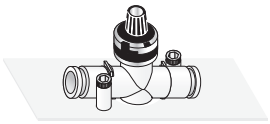
●Example of base mounting

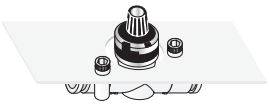
●Example of panel mounting

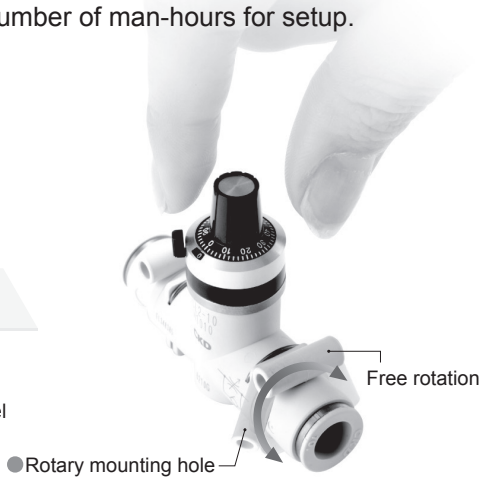

Sealants have outstanding ozone resistance (oil-prohibition type).
RoHS Directive-compliant

■Example of usage circuit

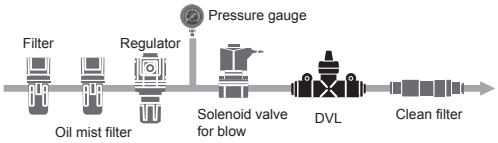

■DVL Series Product

Model variations	Applicable tube O.D.	Flow rate range	Application
Check valve Standard type **DVL-S**	ø4, ø6, ø8, ø10, ø12	20 80 160 240 400	●Control actuator speed ●Adjust vacuum break flow rate for small electronic parts ●Control pressing pressure and tension
Needle valve Oil-prohibited type **DVL-N**	ø4, ø6, ø8, ø10, ø12	20 80 160 240 400	Compatible with clean environments and vacuum fields ●Adjust floating conveying flow rate ●Control ionizer purge gas flow rate ●Blow workpieces with air

Needle valve with adjusting dial, check valve

DVL-S Series

Needle valve with adjusting dial, needle valve/oil-prohibited

DVL-N Series

● Port size: ø4, ø6, ø8, ø10, ø12

JIS symbol

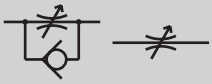

DVL-S DVL-N

RoHS CAD

Specifications

● Needle valve with adjusting dial, check valve DVL-S

Item		DVL-S-06					DVL-S-08		DVL-S-10		
		020		080		160	240		400		
Compatible tube O.D.	mm	ø4	ø6	ø4	ø6	ø6	ø6	ø8	ø8	ø10	ø12
Working fluid		Compressed air									
Max. working pressure	MPa	1.0 (≈150 psi, 10 bar)									
Min. working pressure	MPa	0.1 (≈15 psi, 1 bar) (*3)									
Proof pressure	MPa	1.5 (≈220 psi, 15 bar)									
Fluid temperature	°C	5 (41°F) to 60 (140°F) (no freezing. *2)									
Ambient temperature	°C	0 (32°F) to 60 (140°F) (no freezing)									
Weight	g	54	48	54	48	48	60	61	82	86	88
Needle control range		1 to 12 rotations					1 to 13 rotations				
Free flow	Flow rate ℓ/min(ANR)	170	300	170	300	300	400	550	900	1100	1200
	Eff. X-sectional area mm^2	2.5	4.5	2.5	4.5	4.5	6	8	13.5	16.5	18
Controlled flow	Flow rate ℓ/min(ANR)	18		80		160	240		440		
	Eff. X-sectional area mm^2	0.25		1.2		2.4	3.6		6.6		

*1: Flow rate is the atmospheric pressure conversion at 0.5 MPa.
*2: Freezing may occur due to adiabatic expansion depending on the air quality (dew point).
*3: Evacuating up to -100 kPa is possible only in the direction of free flow. (Needle control is not available)

● Needle valve with adjusting dial, needle valve/oil-prohibited DVL-N

Item		DVL-N-06					DVL-N-08		DVL-N-10		
		020		080		160	240		400		
Compatible tube O.D.	mm	ø4	ø6	ø4	ø6	ø6	ø6	ø8	ø8	ø10	ø12
Working fluid		Compressed air/N2 gas/low vacuum									
Max. working pressure	MPa	0.7 (≈100 psi, 7 bar)									
Negative pressure	kPa	-100 (≈-15 psi, -1 bar)									
Proof pressure	MPa	1.5 (≈220 psi, 15 bar)									
Fluid temperature	°C	5 (41°F) to 60 (140°F) (no freezing. *2)									
Ambient temperature	°C	0 (32°F) to 60 (140°F) (no freezing)									
Weight	g	54	48	54	48	48	60	61	82	86	88
Needle control range		1 to 12 rotations					1 to 13 rotations				
Flow rate	ℓ/min(ANR)	18		80		160	240		440		
Effective cross-sectional area	mm^2	0.25		1.2		2.4	3.6		6.6		

*1: Flow rate is the atmospheric pressure conversion at 0.5 MPa.
*2: Freezing may occur due to adiabatic expansion depending on the air quality (dew point).

How to order

DVL - S - 06 - H66 - 020

Model No.

Ⓐ Control method

Ⓑ Body size

Ⓒ Compatible tube O.D.

Ⓓ Flow rate

Refer to the table below for the body size, compatible tube O.D. and flow rate combination.

Code	Description
Ⓐ Control method (oil removal)	
S	Check valve
N	Needle valve (oil-prohibited)
Ⓑ Body size	
06	1/8 thread equivalent
08	1/4 thread equivalent
10	3/8 thread equivalent
Ⓒ Compatible tube O.D.	
H44	ø4
H66	ø6
H88	ø8
H1010	ø10
H1212	ø12
Ⓓ Flow rate	***1**
020	18 ℓ/min(ANR)
080	80 ℓ/min(ANR)
160	160 ℓ/min(ANR)
240	240 ℓ/min(ANR)
400	440 ℓ/min(ANR)

Precautions for model No. selection

*1: The flow rate is the guide value at 0.5 MPa.
*2: DVL-S and DVL-N can be identified with the color of the push ring.
DVL-S... White
DVL-N... Blue

Combination of body size, compatible tube O.D., and flow rate

	Ⓑ Body size						
	06		08		10		
Ⓒ Compatible tube O.D. / Ⓓ Flow rate	H44	H66	H66	H88	H88	H1010	H1212
020	●	●					
080	●	●					
160		●					
240			●	●			
400					●	●	●

SCP*3
CMK2
CMA2
SCM
SCG
SCA2
SCS2
CKV2
CAV2/COVP/N2
SSD2
SSG
SSD
CAT
MDC2
MVC
SMG
MSD/MSDG
FC*
STK
SRL3
SRG3
SRM3
SRT3
MRL2
MRG2
SM-25
ShkAbs
FJ
FK
Spd Contr
Ending

Flow characteristics

*The flow characteristics graph gives reference values, and does not guarantee the values.

● DVL-*-020

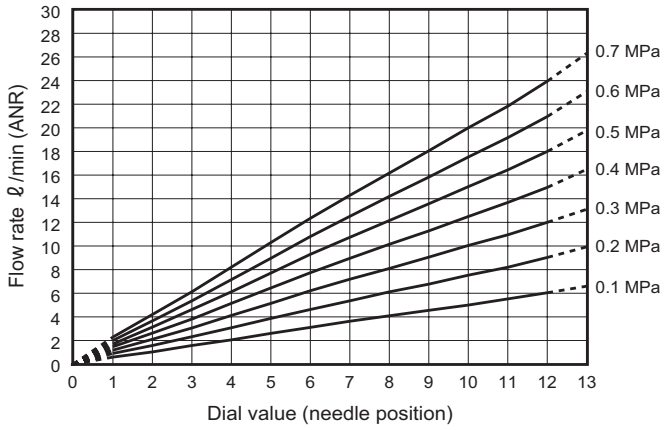

● DVL-*-080

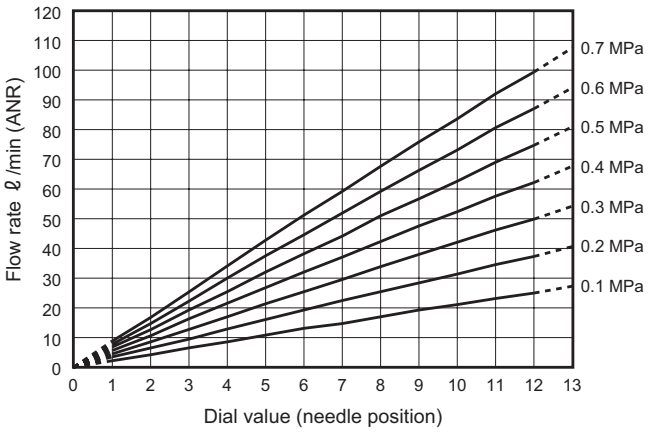

● DVL-*-160

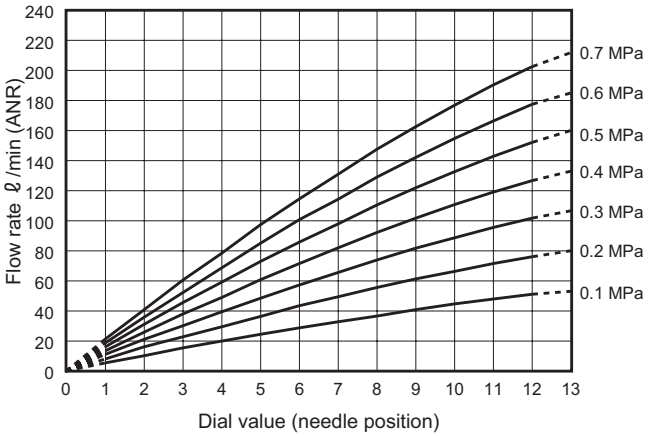

● DVL-*-240

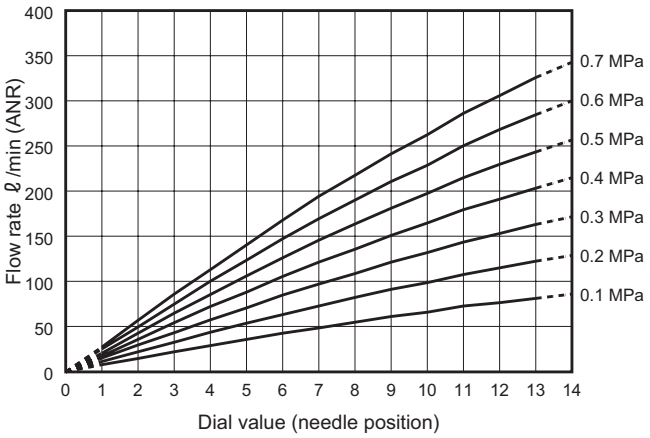

● DVL-*-400

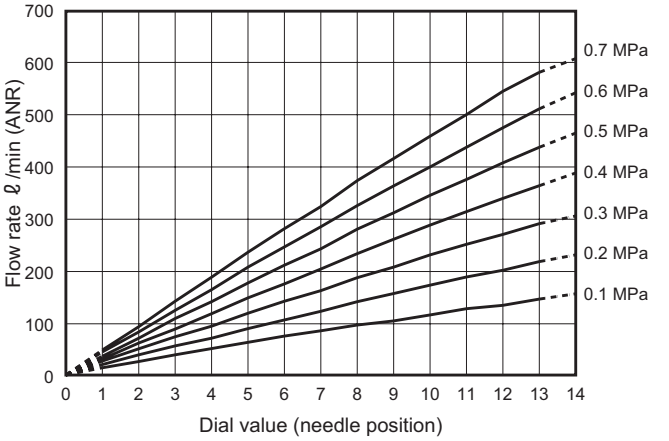

Internal structure and parts list

● DVL-S

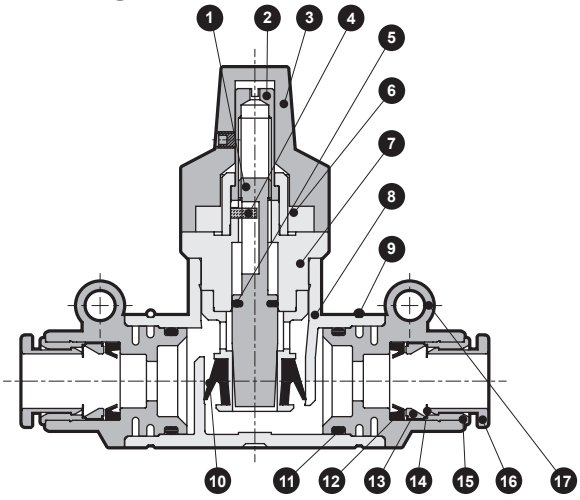

No.	Part name	Material
1	Needle	Copper alloy
2	Rotary shaft	Copper alloy
3	Dial	Aluminum alloy, polyamide, etc.
4	Parallel pin	Stainless steel
5	O-ring	Nitrile rubber
6	Guide bush	Copper alloy
7	Check bracket	Copper alloy
8	Body	Polybutylene terephthalate
9	Stopper ring	Stainless steel
10	Check packing	Hydrogenated nitrile rubber
11	O-ring	Nitrile rubber
12	Packing	Nitrile rubber
13	Holder	Copper alloy or Polyether sulfone
14	Chuck	Stainless steel
15	Outer ring	Copper alloy
16	Push ring	Polybutylene terephthalate or polyacetal
17	Fitting case	Polybutylene terephthalate

*1: All the copper alloy parts have electroless nickel plating.
*2: Some structures differ depending on the type. (No material changed)

● DVL-N

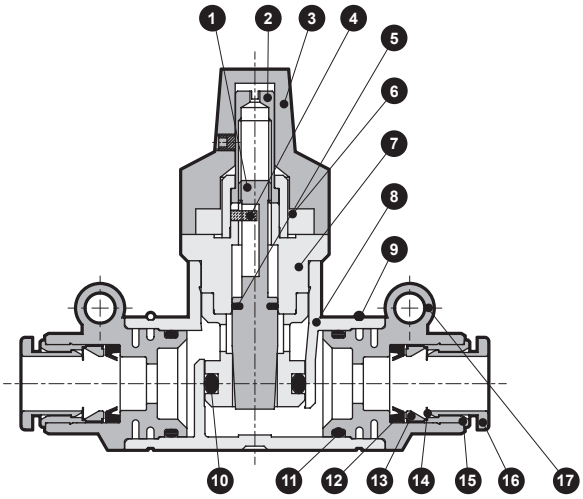

No.	Part name	Material
1	Needle	Copper alloy
2	Rotary shaft	Copper alloy
3	Dial	Aluminum alloy, polyamide, etc.
4	Parallel pin	Stainless steel
5	O-ring	Fluoro rubber
6	Guide bush	Copper alloy
7	Check bracket	Copper alloy
8	Body	Polybutylene terephthalate
9	Stopper ring	Stainless steel
10	O-ring	Hydrogenated nitrile rubber
11	O-ring	Hydrogenated nitrile rubber
12	Packing	Hydrogenated nitrile rubber
13	Holder	Copper alloy or Polyether sulfone
14	Chuck	Stainless steel
15	Outer ring	Copper alloy
16	Push ring	Polybutylene terephthalate or polyacetal
17	Fitting case	Polybutylene terephthalate

*1: All the copper alloy parts have electroless nickel plating.
*2: Some structures differ depending on the type. (No material changed)

Dimensions CAD

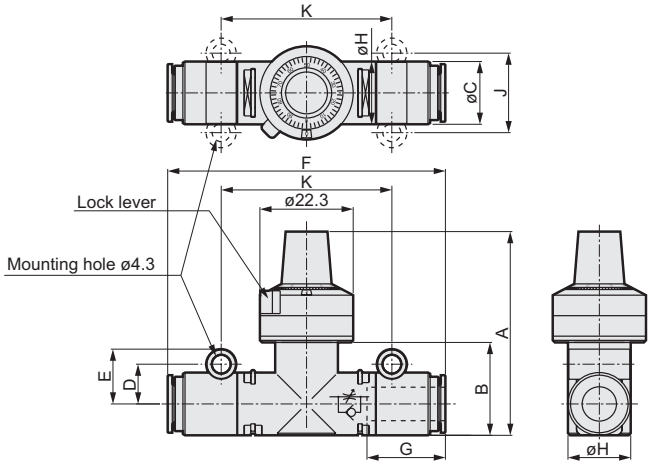

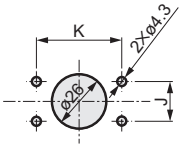

Panel mounting dimensions

Model No.	Compatible tube O.D.	A	B	C	D	E	F	H	J	K	G (tube insert length)
DVL-*-06-H44-*	ø4	45.5	17	12	8.1	11.6	55	12	16.2	30.8	12.9
DVL-*-06-H66-*	ø6						49.5				13.7
DVL-*-08-H66-*	ø6	50	22.5	13	9.5	13.1	64	15	19	41	18
DVL-*-08-H88-*	ø8			15			66.5				19
DVL-*-10-H88-*	ø8	58	29		11.5	15.1	71	20	23	47	
DVL-*-10-H1010-*	ø10			18			75				21
DVL-*-10-H1212-*	ø12			20.4			79				22

Pneumatic components (speed controller)

Safety Precautions

Be sure to read this section before use.
Refer to “Pneumatic, Vacuum and Auxiliary Components (No. CB-024SA)” for general precautions for pneumatic components.

Product-specific cautions: Needle valve with dial

Design/selection

CAUTION

■ This valve cannot be used as a stop valve that requires no leakage.
Slight leakage is allowed for in this product’s specifications.

■ Note that the flow rate may differ from the values on page 1902 depending on the piping conditions around the unit and the temperature changes.

■ Dust cannot be completely kept out of the flow path.
Even when using oil-prohibited models, install a final clean filter if dust could be a problem with the circuit.

■ Oil-prohibited specifications apply for fluid passage section only.
Do not wash this product, because grease is used for the internal parts except for the wetted sections.

■ Do not use this valve in circuits where ozone is generated.
Ozone resistance is sufficient for naturally generated ambient ozone. Packing deteriorates if ozone levels are high.

■ Use the product in the range of conditions specified for the product.
Consult with CKD when using the product for special applications.
- Use of the product exceeding the specifications range may result in insufficient performance, and safety cannot be guaranteed.
- This product may not be usable in special applications and environments. For example, use for applications requiring safety, including nuclear energy, railways, aircraft, vehicles, medical devices, devices in contact with beverages or foodstuffs, amusement devices, emergency cutoff circuits, press machines, brake circuits, or safety devices or applications.

■ Confirm before use that the product will withstand the working environment.
- This product cannot be used in environments where functional obstacles could occur.
  Such environments include high temperatures, chemical atmospheres, or where chemical liquids, vibration, moisture, water dripping or gas is present.
  Environments where ozone is generated.
- Do not use the product in a place where it could directly contact coolant or spatter, etc.

Mounting, installation and adjustment

CAUTION

■ To adjust the flow rate, turn the dial to the right to open or the left to close.

■ After adjustment, lock the dial with the sliding lock lever.

■ The flow rate control range is from “1” to “12” or “13” on the dial rotation display.
Do not set the flow rate outside this range. Turning the dial to the fully closed or fully open position forcibly may result in failure or wrong flow characteristics.

■ Even when the needle is fully closed, the dial display is not 0.
Calibration of the dial indicator flow rate is performed when the needle is not fully closed. Note that 0 is not necessarily indicated when the needle is fully closed. After “0”, either “19” or no number at all is displayed.

■ Do not remove the dial from the body.
If the dial is removed, readjustment and calibration of flow characteristics cannot be performed.

■ Install a pneumatic filter before the circuit.
Flow rate fluctuates due to clogging and foreign matter in the orifice.

Mounting, installation and adjustment

■ The dial of the DVL-N is slightly stiff.
Because of the oil-prohibited specifications, dial movement may be slightly stiffer than with the DVL-S.

■ Rotate the mounting hole section at no pressurized state.

■ The mounting hole of the DVL-N is slightly stiff.
Because of the oil-prohibited specifications, movement of the rotary mounting hole will be stiffer than for the DVL-S.

■ When mounting on a panel, the stopper ring will interfere with the panel, so insert a flat washer between the mounting hole and panel.

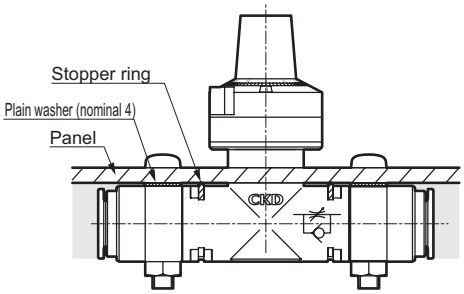

■ When piping, fix the product with a bolt or cable tie.
Movement or displacement of the product may cause disconnection of a tube.

■ Tightening torque should be 0.8 N·m when tightening the bolt to the mounting hole.

■ There is no direction for needle valve piping.

■ Stop air flow and confirm that there is no residual pressure before replacing the tube.

■ Handling push-in fittings and tubes
For handling push-in fittings and tubes, refer to the warnings and cautions for fittings and tubes in “Pneumatic/Vacuum/Auxiliary Components (No. CB-024SA)”.

■ When supplying compressed air after connecting pipes, do not suddenly apply high pressure.
The pipe connection could dislocate causing the pipe tube to fly out and result in accidents.

■ After connecting piping, check pipe connections for air leaks before supplying compressed air.
Apply a leakage detection agent on pipe connections with a brush, and check for air leaks.

■ Connect piping so that connections are not dislocated by equipment movement, vibration, tension, etc.

■ Around the pneumatic components, keep space for installation, removal and piping work.

■ Avoid using the product for applications that involve continuous rotation or oscillations.
Fittings could be damaged.

■ Avoid use in areas with large vibration or impact.

Controlling the actuator’s speed

■ Adjust the final speed each time used.
Confirm the final speed after each usage as the variability between products, actuators, conditions of use and ambient temperatures will cause deviations. Aging of the actuator may cause speed to fluctuate greatly.

■ Check the flow direction with the JIS symbol.
If installed in reverse, speed adjustment will not function and the actuator could pop out, creating a hazard.

■ Adjust speed by opening when the needle is nearly closed.
If the needle is opened, the actuator could suddenly and dangerously pop out.

■ Understand compressed air features before designing a pneumatic circuit.

Speed controller, elbow with push-in fitting

SC3W Series

● Port size: M3, M5, R1/8 to R1/2

JIS symbol

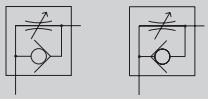

(Meter-out) (Meter-in)

RoHS CAD

Specifications

Item		SC3W																
		SC3W-M3		SC3W-M5			SC3W-6			SC3W-8			SC3W-10				SC3W-15	
Compatible tube O.D. mm		ø3.2	ø4	ø3.2	ø4	ø6	ø4	ø6	ø8	ø6	ø8	ø10	ø6	ø8	ø10	ø12	ø10	ø12
Working fluid		Compressed air																
Max. working pressure MPa		1.0 (≈150 psi, 10 bar)																
Min. working pressure MPa		0.05 (≈7.3 psi, 0.5 bar)																
Proof pressure MPa		1.5 (≈220 psi, 15 bar)																
Fluid temperature °C		5 (41°F) to 60 (140°F) (no freezing. *3)																
Ambient temperature °C		0 (32°F) to 60 (140°F) (no freezing)																
Port size		M3		M5			R1/8			R1/4			R3/8				R1/2	
Weight g		4.9	5.7	7.9	8.8	9.6	25	26	27	50	51	54	63.7	75	78	81	134	138
Dial value (needle position)		10 (14) or more		10 (16) or more			10 (15) or more			13 or more			13 or more				14 or more	
Free flow	Flow rate ℓ/min(ANR)	27(20)		87(80)			210(210)	270(270)	270	470	500	530	650	1000	1100		1500	1600
	Eff. X-sectional area mm²	0.4(0.3)		1.3(1.2)			3.2(3.2)	4.0(4.0)	4.0	7	7.5	8	10	15	16		22	24
Controlled flow	Flow rate ℓ/min(ANR)	20(5.9)		80(6.7)			190(13)	240(13)	240	430	470	470	650	930	1000		1500	1600
	Eff. X-sectional area mm²	0.3(0.08)		1.2(0.1)			2.8(0.2)	3.6(0.2)	3.6	6.5	7	7.0	10	14	15		22	24

*1: Flow rate is the atmospheric pressure conversion value at pressure 0.5 MPa.
*2: Values in ( ) indicate low speed.
*3: Freezing may occur due to adiabatic expansion depending on the air quality (dew point).

Flow characteristics

● Standard (port size M3, M5)

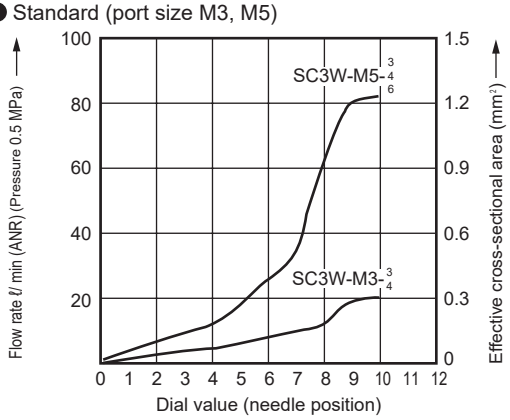

● Standard (port size 6)

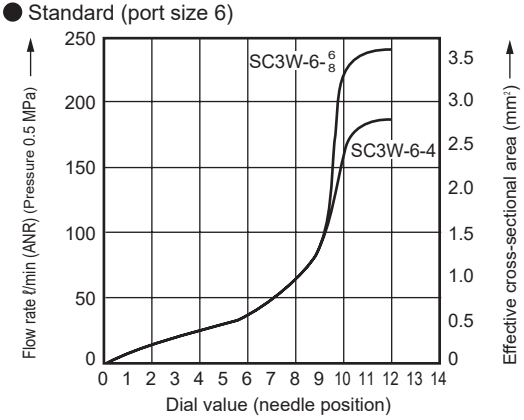

● Standard (port size 8, 10, 15)

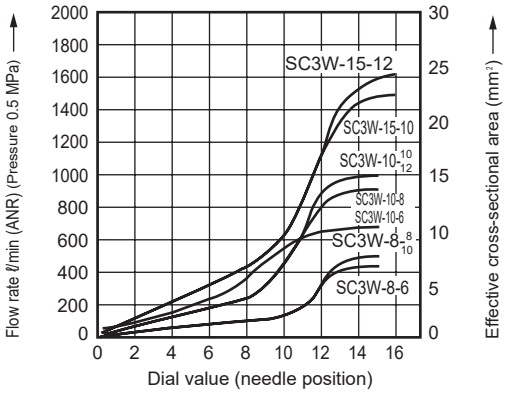

● Low speed

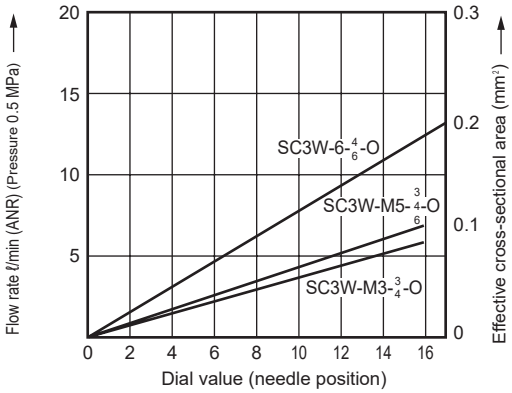

How to order

SC3W - M5 - 4 - I

Model No.

Ⓐ Port size

Ⓑ Compatible tube O.D.

Ⓒ Option *1
*2
*3

Code	Description
Ⓐ Port size	
M3	M3x0.5
M5	M5x0.8
6	R1/8
8	R1/4
10	R3/8
15	R1/2

Ⓑ Compatible tube O.D.

		Piping size					
		M3	M5	6	8	10	15
3	ø3.2	●	●				
4	ø4	●	●	●			
6	ø6		●	●	●	●	
8	ø8			●	●	●	
10	ø10				●	●	●
12	ø12					●	●

Ⓒ Option	
Blank	Meter-out
I	Meter-in (Push ring color: black)
K	Hexagon lock nut
O	Low speed
P6	Copper and PTFE free specifications

is not available.

⚠ Precautions for model No. selection

*1: The options are listed in alphabetical order.
*2: "K" can be selected for port sizes M3 and M5 only.
*3: "O" can be selected for compatible tube O.D. "4" (ø4), "6" (ø6) and port size M3, M5 and "6" (R1/8) only.

[Example of model No.]

SC3W-M5-4-I

Ⓐ Port size : M5x0.8
Ⓑ Compatible tube O.D. : ø4
Ⓒ Option : Meter-in

Ozone-proof specifications

(Ending Page 137)

SC3W — ····· — P11

Clean-room specifications

(Catalog No. CB-033SA)

● Anti-dust generation structure for use in cleanrooms

SC3W — ····· — P7*

Specifications for rechargeable battery

(Catalog No. CC-1226A)

● Design compatible with rechargeable battery manufacturing process

SC3W — ····· — P4

Internal structure and parts list

● Port size: M3, M5

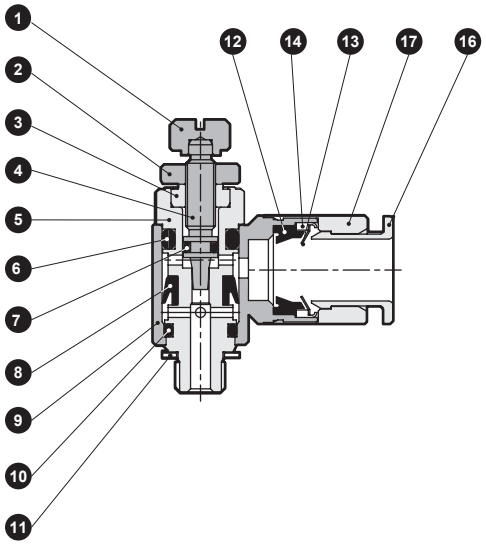

● Port size: 6, 10 (ø6 only)

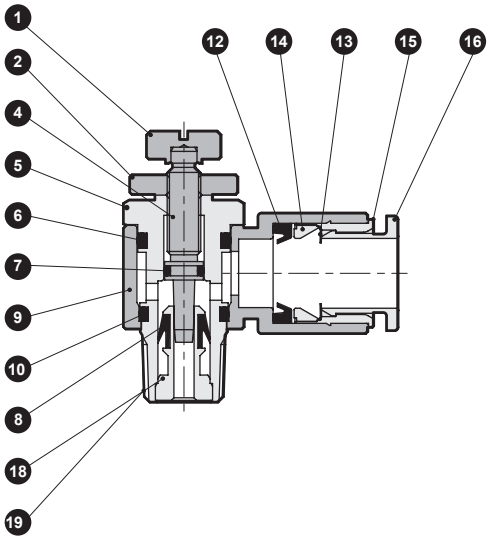

● Port size: 8, 10, 15

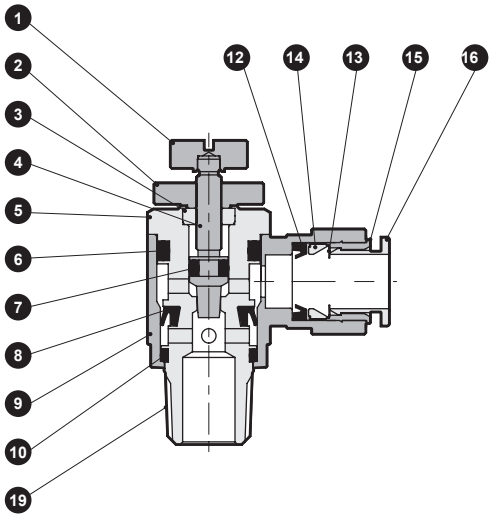

No.	Part name	Material	No.	Part name	Material
1	Knob	Copper alloy	11	Gasket	Steel + nitrile rubber (M5 only)
2	Lock nut	Copper alloy	12	Packing	Nitrile rubber
3	Gland nut	Copper alloy	13	Chuck	Stainless steel
4	Needle	Stainless steel	14	Chuck holder	M3, M5: Copper alloy R1/8 to: Polyether sulfone
5	Rotary shaft	Copper alloy (M3, stainless steel)			
6	O-ring	Nitrile rubber	15	Outer ring	Copper alloy
7	O-ring	Nitrile rubber	16	Push ring	Polybutylene terephthalate (flame-resistant resin *2)
8	Packing	Hydrogenated nitrile rubber	17	Fitting body	Copper alloy
9	Rotor	Polybutylene terephthalate (flame-resistant resin *2)	18	Check part	Copper alloy
10	O-ring	Nitrile rubber	19	Sealant	Fluorinated resin

*1 All the copper alloy parts have electroless nickel plating.
*2 UL94 Standards V-0 equivalent

Dimensions

● SC3W-M $^{3}_{5}$-*

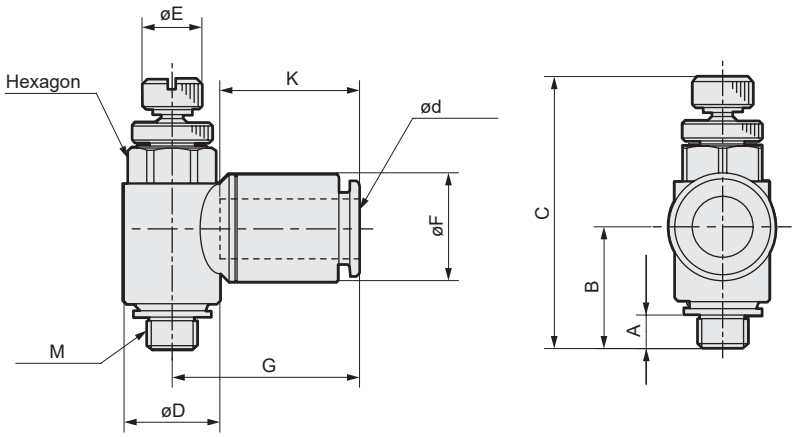

Model No.	ød (Compatible tube O.D.)	M	A	B	C		D	E	F	G	K (tube insert length)	Hexagon
					MAX	MIN						
SC3W-M3-3	ø3.2	M3x0.5	2.4	11.4	27.6	25.1	7.4	5	7.5	15.5	11.7	7
SC3W-M3-4	ø4	M3x0.5	2.4	11.4	27.6	25.1	7.4	5	8.8	16.6	12.9	7
SC3W-M5-3	ø3.2	M5x0.8	3.4	12.4	30.6	27.2	9.6	6	7.5	16.0	11.7	8
SC3W-M5-4	ø4	M5x0.8	3.4	12.4	30.6	27.2	9.6	6	8.8	17.2	12.9	8
SC3W-M5-6	ø6	M5x0.8	3.4	12.4	30.6	27.2	9.6	6	10.8	18.8	14.0	8

● SC3W-$^{6}_{8}_{10}_{15}$-* (same as low speed, standard (SC3W-6))

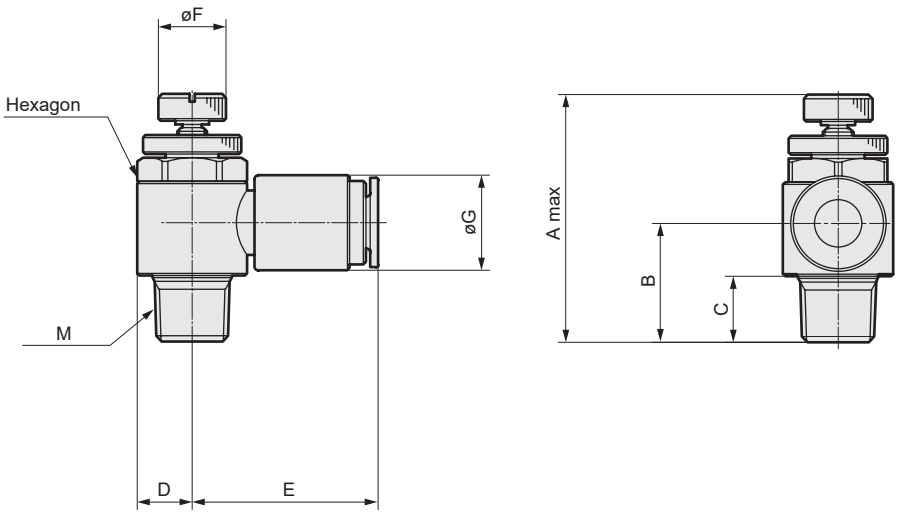

Model No.	M	Tube O.D.	A	B	C	D	E	F	G	Hexagon
SC3W-6-4	R1/8	ø4	38.4	16.2	8	7.3	23.1	9	10.0	13
SC3W-6-6		ø6	38.4	15.7	8	7.3	24.1	9	12.5	13
SC3W-6-8		ø8	38.4	15.4	8	7.3	25.3	9	14.5	13
SC3W-8-6	R1/4	ø6	51.2	25	11	9.5	27.2	12	13.8	17
SC3W-8-8		ø8	51.2	25	11	9.5	28.5	12	16.3	17
SC3W-8-10		ø10	51.2	24	11	9.5	32.0	12	19.3	17
SC3W-10-6	R3/8	ø6	52.4	23.1	12	11.3	28.3	14	12.5	19
SC3W-10-8		ø8	60.2	30.0	12	11.3	30.3	14	16.3	19
SC3W-10-10		ø10	60.2	30.0	12	11.3	33.8	14	19.3	19
SC3W-10-12		ø12	60.2	29.3	12	11.3	37.8	14	21.3	19
SC3W-15-10	R1/2	ø10	66.7	33.8	15	13.5	36.0	16	19.3	24
SC3W-15-12		ø12	66.7	33.8	15	13.5	40.0	16	21.3	24

Speed controller
Universal/push-in fitting

SC3U Series

● Port size: M3, M5, R1/8 to R1/2

JIS symbol

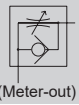
(Meter-out)

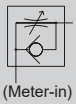
(Meter-in)

RoHS CAD

Features

● The piping direction can be set at any angle on the universal.

● Flame-resistant resin
Flame resistance PBT (equivalent to UL94 standards V-0) is provided as standard.

● The port threads are coated with fluorine-based resin sealant.

Specifications

Item		SC3U-M3		SC3U-M5			SC3U-6			SC3U-8			SC3U-10			SC3U-15	
Compatible tube O.D. mm		ø3.2	ø4	ø3.2	ø4	ø6	ø4	ø6	ø8	ø6	ø8	ø10	ø8	ø10	ø12	ø10	ø12
Working fluid		Compressed air															
Max. working pressure MPa		1.0 (≈150 psi, 10 bar)															
Min. working pressure MPa		0.05 (≈7.3 psi, 0.5 bar)															
Proof pressure MPa		1.5 (≈220 psi, 15 bar)															
Fluid temperature °C		5 (41°F) to 60 (140°F) (no freezing. *3)															
Ambient temperature °C		0 (32°F) to 60 (140°F) (no freezing)															
Port size		M3		M5			R1/8			R1/4			R3/8			R1/2	
Weight g		6.3	7.2	10	11	12	24	26	27	52	54	57	83	85	87	140	143
Dial value (needle position)		10 (14) or more		10 (16) or more			10 (15) or more		10 or more	13 or more			13 or more			14 or more	
Free flow	Flow rate L/min(ANR)	31 (24)		95 (95)		105 (95)	215 (215)	270 (245)	270	475	510	540	985	1090		1500	1630
	Effective cross-sectional area mm²	0.45 (0.35)		1.4 (1.4)		1.6 (1.4)	3.2 (3.2)	4 (3.7)	4	7	7.5	8	14.5	16		22	24
Controlled flow	Flow rate L/min(ANR)	34 (5.4)		95 (9.5)			190 (17)	260 (17)	260	440	475		950	1150	1220	1500	1630
	Effective cross-sectional area mm²	0.5 (0.08)		1.4 (0.14)			2.8 (0.25)	3.8 (0.25)	3.8	6.5	7		14	17	18	22	24

*1: Flow rate is the atmospheric pressure conversion value at pressure 0.5 MPa.
*2: Values in ( ) indicate low speed.
*3: Freezing may occur due to adiabatic expansion depending on the air quality (dew point).

How to order

SC3U - M5 - 4 - I

Model No.

Ⓐ Port size

Ⓑ Compatible tube O.D.

Ⓒ Option *1 *2 *3

Code	Description
Ⓐ Port size	
M3	M3x0.5
M5	M5x0.8
6	R1/8
8	R1/4
10	R3/8
15	R1/2

Ⓑ Compatible tube O.D.

		Piping size					
		M3	M5	6	8	10	15
3	ø3.2	●	●				
4	ø4	●	●	●			
6	ø6		●	●	●		
8	ø8			●	●	●	
10	ø10				●	●	●
12	ø12					●	●

Ⓒ Option

Blank	Meter-out
I	Meter-in (Push ring color: black)
K	Hexagon lock nut
O	Low speed
P6	Copper and PTFE free specifications

is not available.

⚠ Precautions for model No. selection

*1: The options are listed in alphabetical order.
*2: "K" can be selected for port sizes M3 and M5 only.
*3: "O" can be selected for compatible tube O.D. "4" (ø4), "6" (ø6) and port size M3, M5 and "6" (R1/8) only.

[Example of model No.]

SC3U-M5-4-I

Ⓐ Port size : M5 x 0.8
Ⓑ Compatible tube O.D. : ø4
Ⓒ Option : Meter-in

Ozone-proof specifications (made-to-order product)

SC3U - ···· - P11

SCP*3
CMK2
CMA2
SCM
SCG
SCA2
SCS2
CKV2
CAV2/COVP/N2
SSD2
SSG
SSD
CAT
MDC2
MVC
SMG
MSD/MSDG
FC*
STK
SRL3
SRG3
SRM3
SRT3
MRL2
MRG2
SM-25
ShkAbs
FJ
FK
Spd Contr
Ending

Flow characteristics

● Standard (port size M3, M5)

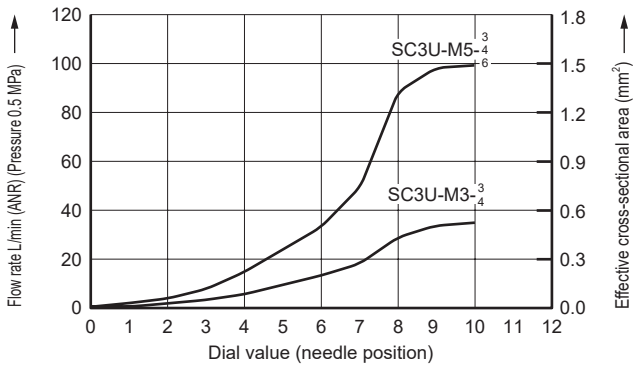

● Standard (port size 6)

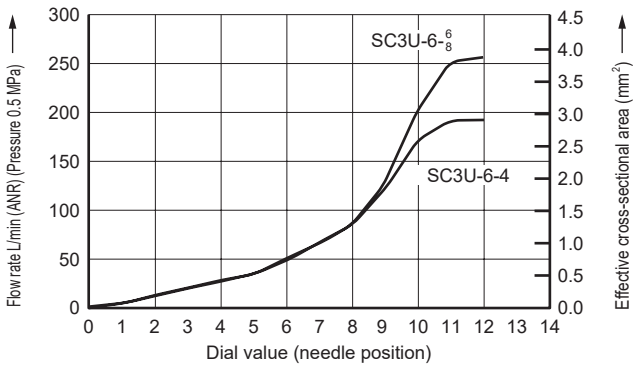

● Standard (port size 8, 10, 15)

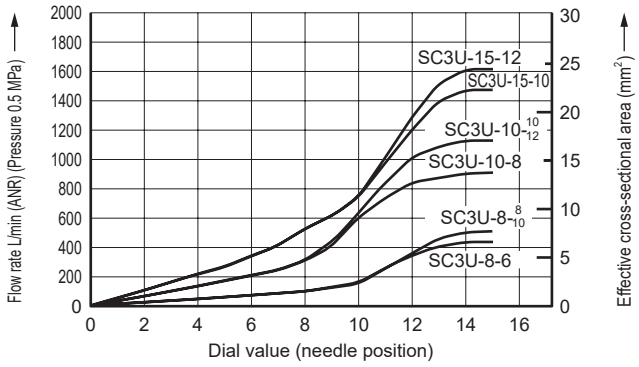

● Low speed

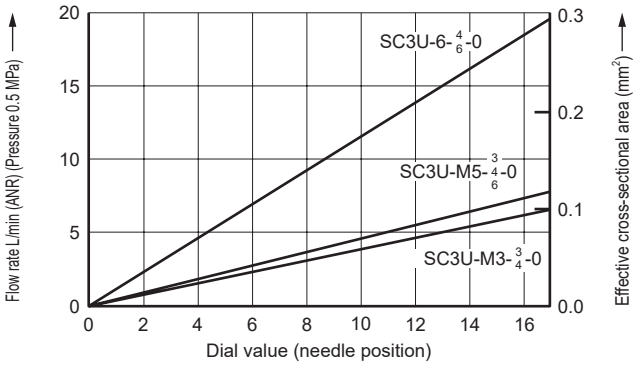

Internal structure and parts list

● SC3U-M3/M5-*

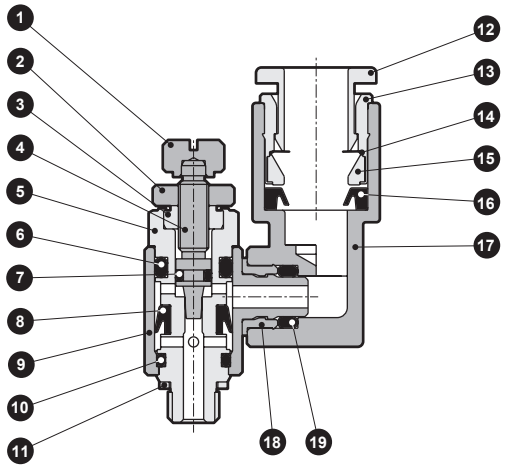

● SC3U-6-*

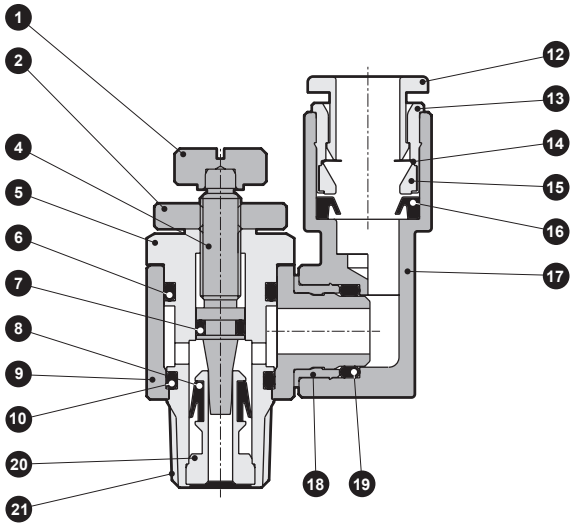

● SC3U-8/10/15-*

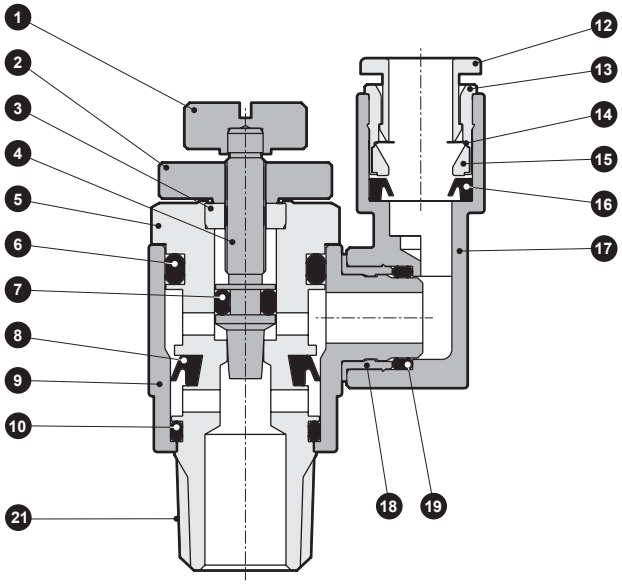

No.	Part name	Material	No.	Part name	Material
1	Knob	Copper alloy	11	Gasket	Stainless steel + nitrile rubber
2	Lock nut	Copper alloy	12	Push ring	Polybutylene terephthalate (flame-resistant resin *2)
3	Gland nut	Copper alloy	13	Outer ring	Copper alloy
4	Needle	Stainless steel	14	Chuck	Stainless steel
5	Rotary shaft	Copper alloy (M3, stainless steel)	15	Chuck holder	Polyether sulfone (Copper alloy for compatible tube O.D. ø3.2)
6	O-ring	Nitrile rubber	16	Packing	Nitrile rubber
7	O-ring	Nitrile rubber	17	Fitting body	Polybutylene terephthalate (flame-resistant resin *2)
8	V packing	Hydrogenated nitrile rubber	18	Stopper	Copper alloy
9	Rotor	Polybutylene terephthalate (flame-resistant resin *2)	19	O-ring	Nitrile rubber
10	O-ring	Nitrile rubber	20	Check part	Copper alloy
			21	Sealant	Fluorinated resin

*1 All the copper alloy parts have electroless nickel plating.
*2 UL94 Standards V-0 equivalent

SCP*3
CMK2
CMA2
SCM
SCG
SCA2
SCS2
CKV2
CAV2/ COVP/N2
SSD2
SSG
SSD
CAT
MDC2
MVC
SMG
MSD/ MSDG
FC*
STK
SRL3
SRG3
SRM3
SRT3
MRL2
MRG2
SM-25
ShkAbs
FJ
FK
Spd Contr
Ending

Dimensions

● SC3U-*-* (the dimensions are the same for the standard and low speed)

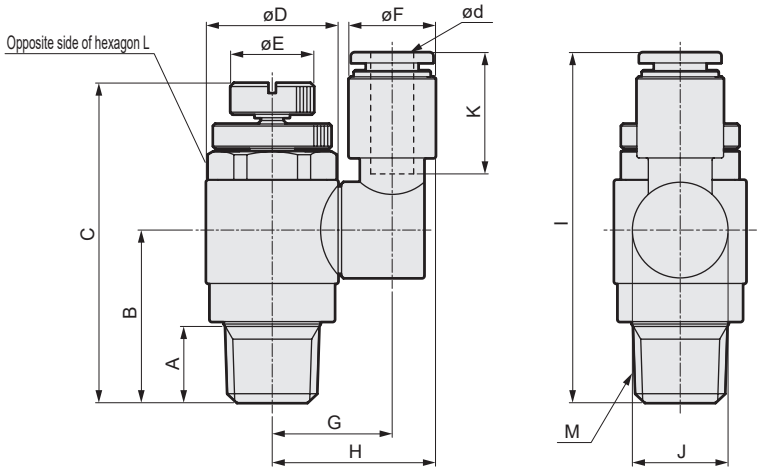

● Dimension A of SC3U- M3 / M5

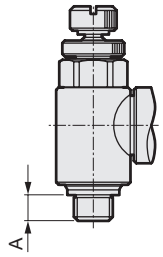

Code / Model No.	ød (Tube O.D.)	M	A	B	C MAX	C MIN	D	E	F	G	H	I	J	K (tube insert length)	L Hexagon
SC3U-M3-3	ø3.2	M3x0.5	2.4	11.4	28.5	26	7.4	5	8.5	10	14.3	28.9	9.8	12.5	7
SC3U-M3-4	ø4								10		15	32.5		16	
SC3U-M5-3	ø3.2	M5x0.8	3.4	12.4	30.8	27.8	9.6	6	8.5	11.1	15.4	30	9.8	12.5	8
SC3U-M5-4	ø4								10		16.1	33.5		16	
SC3U-M5-6	ø6								12.5	12.1	18.4	35		17.5	
SC3U-6-4	ø4	R1/8	8	15.4	39.2	33.4	14.5	9	10	14.5	19.5	39	13	16	13
SC3U-6-6	ø6								12.5	14.6	20.8	40.5		17.5	
SC3U-6-8	ø8								14.5	15.6	22.8	42		19	
SC3U-8-6	ø6	R1/4	11	24.9	51.2	46.1	19	12	12.5	17.3	23.6	50.5	13.8	17.5	17
SC3U-8-8	ø8								14.5	17.8	25.1	52		19	
SC3U-8-10	ø10								17.5	19.3	28.1	55.5		21.5	
SC3U-10-8	ø8	R3/8	12	29.8	60.2	53.1	22.5	14	14.5	19.6	26.8	57.9	16.7	19	19
SC3U-10-10	ø10								17.5	21.1	29.8	60.9		21.5	
SC3U-10-12	ø12								20	22.3	32.3	63.2		23	
SC3U-15-10	ø10	R1/2	15	33.8	66.7	59.1	27	16	17.5	23.3	32.1	65.9	18.8	21.5	24
SC3U-15-12	ø12								20	24.5	34.5	68.2		23	

Safety precautions

⚠ CAUTION

■ Safety precautions

- Always use within the product specifications.
- This product is used for compressed air. Do not use this unit for other fluids.
- Securely insert the tube to the tube end, and make sure that the tube cannot be pulled off.
- Cut the tube with a dedicated cutter and always at a right angle.
- Remove all cutting chips and foreign matter generated during piping and tube insertion before starting use.
- Provide sufficient allowance in the tube so that it does not bend sharply.
- Avoid using this product in a hot humid place, outdoors or where it is subject to direct sunlight.
- Do not use the product in a place where it could come in direct contact with coolant or spatter, etc.
- Avoid using this product in places with high levels of vibration or impact.
- The needle tolerates a slight leak even when fully closed, so do not use it as a stop valve.
- Consult with CKD for use in special environments.

■ Precautions for piping

- Always use within the recommended tightening torque range.
- Do not tighten while pressure is applied.
- Stop air flow and confirm that there is no residual pressure before replacing the tube.
- Mounting is possible by rotating in an arbitrary direction, but do not use this product in applications involving constant rotation or oscillation.
- Do not apply a load other than rotation onto the rotator and fitting connection.

Port thread	Tightening torque N·m
M3	0.3 to 0.6
M5	1.0 to 1.5
Rc1/8	3 to 5
Rc1/4	6 to 8
Rc3/8	13 to 15
Rc1/2	16 to 18

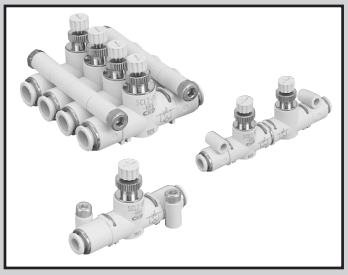

Speed controller Line type with push-in fitting

SCL2 Series

In/out speed controller Inline with push-in fitting

SCD2 Series

● Port size: ø1.8/ø4/ø6/ø8/ø10/ø12

JIS symbol

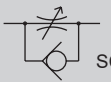

SCL2 Series

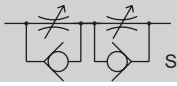

SCD2 Series

Overview

● The SCL2 Series is an inline speed controller useful for remote or centralized actuator control.
● The SCD2 Series is an integrated metering in/out speed controller that controls both air intake and exhaust flow rate.
Depending on the circuit, the actuator can be prevented from popping out, speed can be stabilized, and reciprocating single acting cylinder speed can be controlled.

Features

Unrestricted mounting

The installation area rotates by 360°, enabling mounting and installation method to be from base, side, or panel.
Mounting bracket is not required.

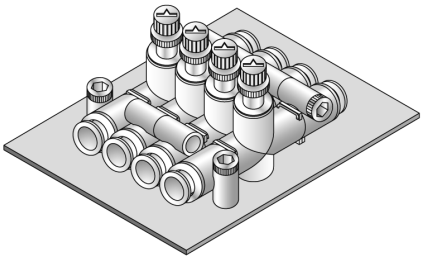

Example of base mounting

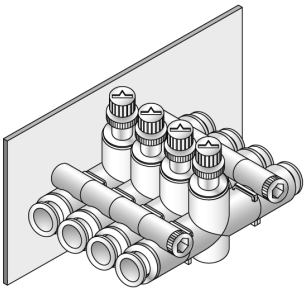

Example of wall mounting

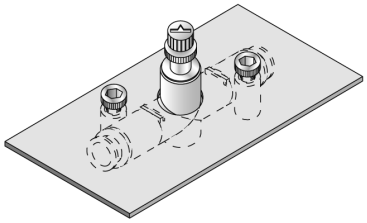

Example of panel mounting

Wide range of choices

Fiber tube specifications and large bore size have been added to the diverse lineup, expanding the size of compatible tubing to ø1.8 to ø12 diameter.

Large flow rate with compact

The max. flow rate achieved even with a compact body extends the selection range for cylinder size and speed control.

Fine speed available

Simple speed control for low and fine speed areas as well as small bore size cylinders.

Push-in connection

Push-in fittings simplify tubing connection.

Standard ozone-resistant materials

Ozone-resistant materials are used as standard for check packing to prevent deterioration.

Standard flame-resistant resin: UL94 Standard V-0 or equivalent

Refer to page 1923 for SCL2/SCD2 Series Safety Precautions.

Specifications

● Speed controller Line type SCL2

Model No.			SCL2-04			SCL2-06	SCL2-08		SCL2-10		
Compatible tube O.D.		mm	ø1.8	ø1.8/ø4	ø4	ø6	ø6	ø8	ø8	ø10	ø12
Working fluid			Compressed air								
Max. working pressure		MPa	0.7 (≈100 psi, 7 bar)		1.0 (≈150 psi, 10 bar)						
Min. working pressure		MPa	0.1 (≈15 psi, 1 bar)								
Proof pressure		MPa	1.05 (≈150 psi, 10.5 bar)		1.5 (≈220 psi, 15 bar)						
Fluid temperature		°C	5 (41°F) to 60 (140°F) (no freezing. *3)								
Ambient temperature		°C	0 (32°F) to 60 (140°F) (no freezing)								
Weight		g	13	12	11.5	16	32	33	53	57	59
Dial value (needle position)			12 [15]								
Free flow	Flow rate	L/min(ANR)	[13]		130	300	400	550	900	1100	1200
	Effective cross-sectional area	mm^2	[0.2]		1.9	4.5	6	8	13.5	16.5	18
Controlled flow	Flow rate	L/min(ANR)	[10]		130 [13]	300 [13]	400	550	900	1100	1200
	Effective cross-sectional area	mm^2	[0.15]		1.9 [0.2]	4.5 [0.2]	6	8	13.5	16.5	18

● In/out speed controller Inline SCD2

Model No.		SCD2-04			SCD2-06	SCD2-08		SCD2-10		
Compatible tube O.D.	mm	ø1.8	ø1.8/ø4	ø4	ø6	ø6	ø8	ø8	ø10	ø12
Working fluid		Compressed air								
Max. working pressure	MPa	0.7 (≈100 psi, 7 bar)		1.0 (≈150 psi, 10 bar)						
Min. working pressure	MPa	0.1 (≈15 psi, 1 bar)								
Proof pressure	MPa	1.05 (≈150 psi, 10.5 bar)		1.5 (≈220 psi, 15 bar)						
Fluid temperature	°C	5 (41°F) to 60 (140°F) (no freezing. *3)								
Ambient temperature	°C	0 (32°F) to 60 (140°F) (no freezing)								
Weight	g	23	22	21.5	29	63	64	108	112	114
Dial value (needle position)		12 [15]								
Flow rate	L/min(ANR)	[10]	[10]	100 [13]	250 [13]	330	400	750	850	900
Effective cross-sectional area	mm^2	[0.15]	[0.15]	1.5 [0.2]	3.7 [0.2]	5	6	11	12.5	13

*1: Flow rate is the atmospheric pressure conversion at 0.5 MPa.
*2: Values in [ ] indicate fine speed.
*3: Freezing may occur due to adiabatic expansion depending on the air quality (dew point).

Clean-room specifications (Catalog No. CB-033SA)

● Anti-dust generation structure for use in cleanrooms

SCL2- **P7***

Specifications for rechargeable battery (Catalog No. CC-1226A)

● Design compatible with rechargeable battery manufacturing process

SCL2
SCD2 ..... **P4**

SCP*3
CMK2
CMA2
SCM
SCG
SCA2
SCS2
CKV2
CAV2/COVP/N2
SSD2
SSG
SSD
CAT
MDC2
MVC
SMG
MSD/MSDG
FC*
STK
SRL3
SRG3
SRM3
SRT3
MRL2
MRG2
SM-25
ShkAbs
FJ
FK
Spd Contr
Ending

How to order

● Speed controller Line type

SCL2 - 04 - H44 - ○

● In/out speed controller Inline

SCD2 - 04 - H44 - ○

Model No. Ⓐ Body size Ⓑ Compatible tube O.D. Ⓒ Flow characteristics

Code	Description
Ⓐ Body size	
04	M5 thread equivalent
06	1/8 thread equivalent
08	1/4 thread equivalent
10	3/8 thread equivalent
Ⓑ Compatible tube O.D.	
H22	ø1.8
H42	Side A: ø4 Side B: ø1.8
H24 (*1)	Side A: ø1.8 Side B: ø4
H44	ø4
H66	ø6
H88	ø8
H1010	ø10
H1212	ø12
Ⓒ Flow characteristics	
Blank	Standard
F	Fine speed

Refer to the table at right for body size, compatible tube O.D., and flow characteristic combinations.

⚠ Precautions for model No. selection

*1 : H24 cannot be selected for SCD2. Select H42 instead.

*2 : There is no push-in fitting compatible with Ⓑ Compatible tube O.D. ø1.8. For ø1.8 line type with push-in fitting, refer to "Pneumatic, Vacuum and Auxiliary Components (No. CB-024SA)".

Combination of body size, compatible tube O.D., and flow characteristics

Ⓑ Compatible tube O.D.		Ⓐ Body size 04	06	08	10
H22	ø1.8	○			
H42	ø4/ø1.8	○			
H24 (*1)	ø1.8/ø4	○			
H44	ø4	● ○			
H66	ø6		● ○	●	
H88	ø8			●	●
H1010	ø10				●
H1212	ø12				●

● Flow characteristics "standard"
○ Flow characteristics "fine speed"
Not available

● Illustration of combination of compatible tube O.D. (H24/H42 only)

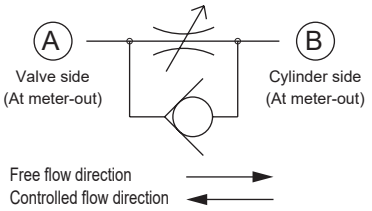

Flow characteristics

● Standard
SCL2-04, SCL2-06, SCD2-04, SCD2-06

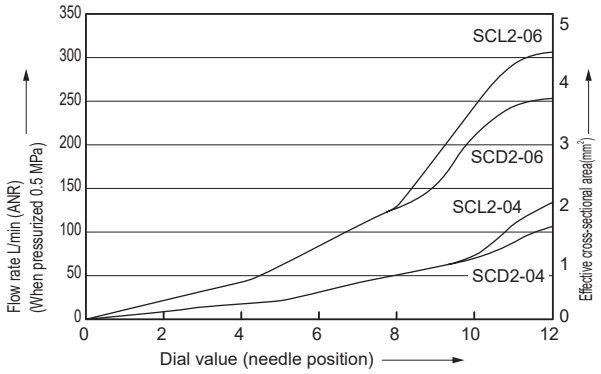

● Standard
SCL2-08, SCL2-10

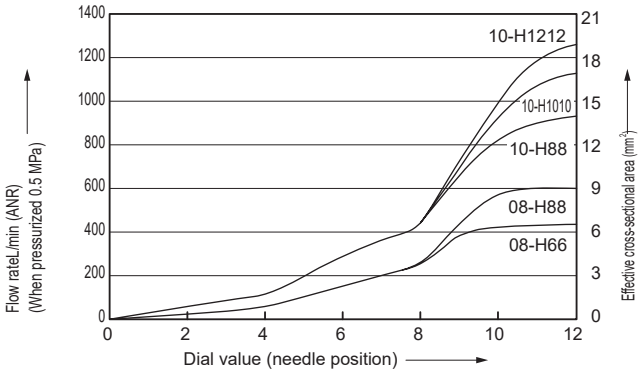

● Standard
SCD2-08, SCD2-10

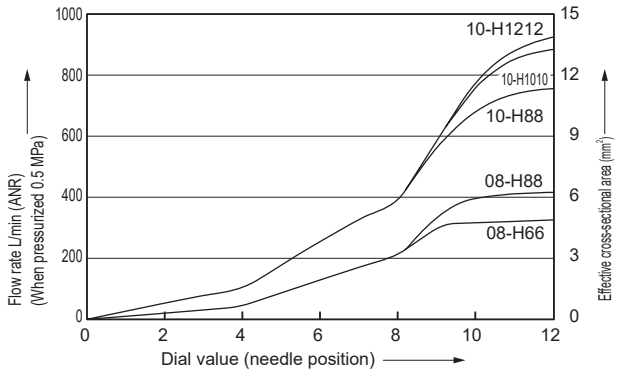

● Fine speed

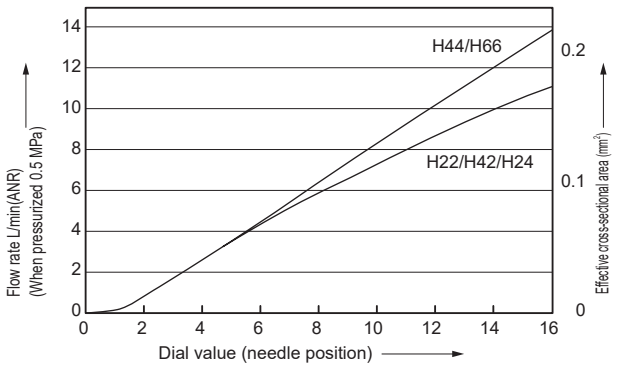

Internal structure and parts list

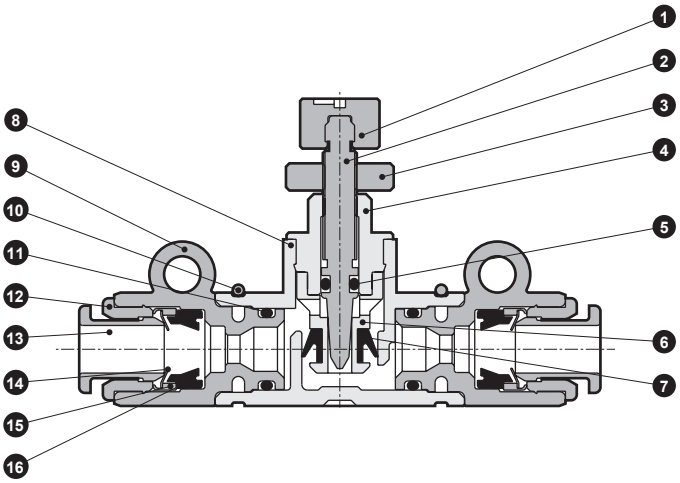

No.	Part name	Material
1	Knob	Polybutylene terephthalate
2	Needle	Copper alloy
3	Lock nut	Copper alloy
4	Guide ring	Copper alloy
5	O-ring	Nitrile rubber
6	Check bracket	Copper alloy
7	Check packing	Hydrogenated nitrile rubber
8	Body	Polybutylene terephthalate
9	Fitting case	Polybutylene terephthalate
10	Stopper ring	Stainless steel
11	O-ring	Nitrile rubber
12	Outer ring	Copper alloy
13	Push ring	Polybutylene terephthalate
14	Chuck	Stainless steel
15	Holder	Copper alloy or Polyether sulfone
16	Packing	Nitrile rubber

*1 All the copper alloy parts have electroless nickel plating.
*2 All resin parts are flame-resistant. (equivalent to UL94 standards V-0)
Excluding compatible tube O.D. ø1.8.

Dimensions

CAD

● SCL2 Series

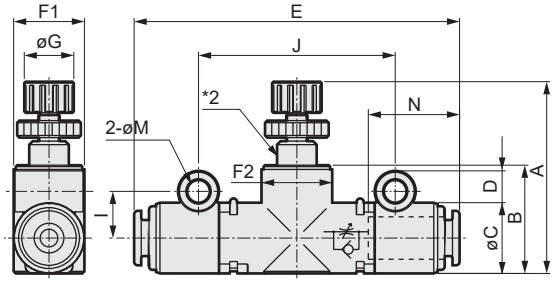

● Mounting pitch dimension for manifold

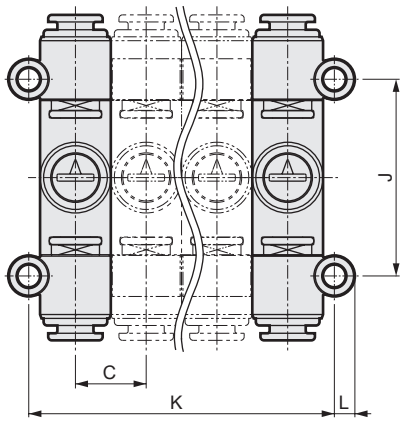

● SCD2 Series

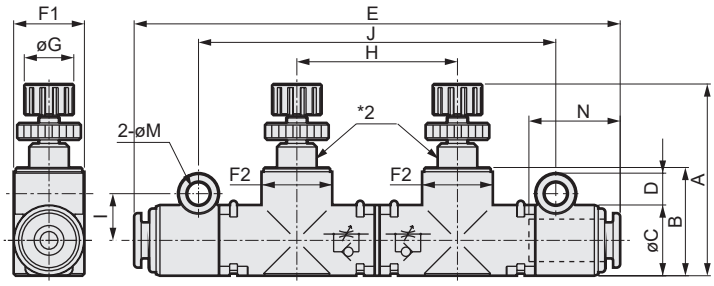

● Outline drawing of fitting for connected tube outer diameter ø1.8

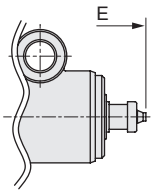

Model No.	Connected tube outer diameter	A MIN	A MAX	B	C	D	E	F1	F2	G	H	I	J	K	L	M (Mounting hole diameter)	N (tube insert length)
SCL2-04-H22 *1	ø1.8	27.1	31.6	15.3	10	4.5	50.8	10	10.6	7	-	6.6	27.8	10xn+3.2	2.9	3.3	-
SCL2-04-H42 *1	ø4/ø1.8						48.4										12.9/-
SCL2-04-H24 *1	ø1.8/ø4						48.4										-/12.9
SCL2-04-H44	ø4						46										12.9
SCL2-06-H66	ø6	28.8	33.3	17.7	12	5.6	49.4	12	12.2	7	-	8.1	30.8	12xn+4.2	3.5	4.3	13.7
SCL2-08-H66	ø6	38	44.5	22.9	15	5.6	64	15	15.5	11	-	9.5	41	15xn+4	3.6		18
SCL2-08-H88	ø8						66.5										19
SCL2-10-H88	ø8	44	50.5	29.7	20	5.1	71	20	20.5	11	-	11.5	47	20xn+3			19
SCL2-10-H1010	ø10						75										21
SCL2-10-H1212	ø12				20.4	4.9	79							20.4xn+3			22
SCD2-04-H22 1	ø1.8	27.1	31.6	15.3	10	4.5	73.5	10	10.6	7	22.7	6.6	50.5	10xn+3.2	2.9	3.3	-
SCD2-04-H42 1	ø4/ø1.8						71.1										12.9/-
SCD2-04-H44	ø4						68.7										12.9
SCD2-06-H66	ø6	28.8	33.3	17.7	12	5.6	73.9	12	12.2	7	24.5	8.1	55.3	12xn+4.2	3.5	4.3	13.7
SCD2-08-H66	ø6	38	44.5	22.9	15	5.6	97.5	15	15.5	11	34	9.5	75	15xn+4	3.6		18
SCD2-08-H88	ø8						100										19
SCD2-10-H88	ø8	44	50.5	29.7	20	5.1	111	20	20.5	11	40.5	11.5	87.5	20xn+3			19
SCD2-10-H1010	ø10						115										21
SCD2-10-H1212	ø12				20.4	4.9	119							20.4xn+3			22

*1: Connection tubing is a fitting dedicated to fiber tube.
*2: There is a slit at this location on the fine speed.
*3: F1 and F2 dimensions are oval.

Needle valve Line type with push-in fitting

SCL2-N Series

● Port size: ø4/ø6/ø8

JIS symbol

Features

Unrestricted mounting

The installation area rotates by 360°, enabling mounting and installation method to be from base, side, or panel.
Mounting bracket is not required.

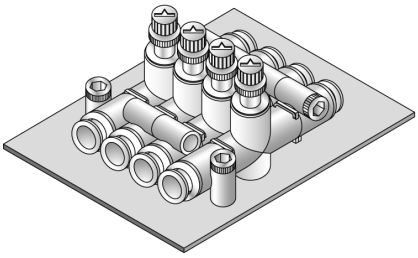

Example of base mounting

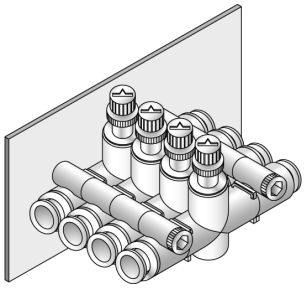

Example of wall mounting

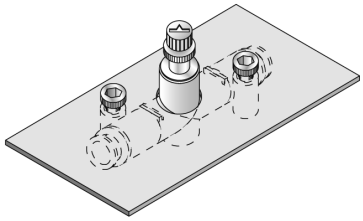

Example of panel mounting

Low-evaporation grease

This series is suitable for oil-sensitive environments and systems. This product is also compatible with oil-free clean packaging “oil-prohibited specifications.”

Linear flow characteristics

A flat dedicated needle for flow adjustment is used.

Specifiable flow size

Four flow rate sizes of 13/50/150 and 300 L/min. at 0.5 MPa are available to enable precise flow rate adjustment.

Push-in connection

Push-in fittings simplify tubing connection.

Standard flame-resistant resin: UL94 Standard V-0 or equivalent

■ SCL2-N Series applications

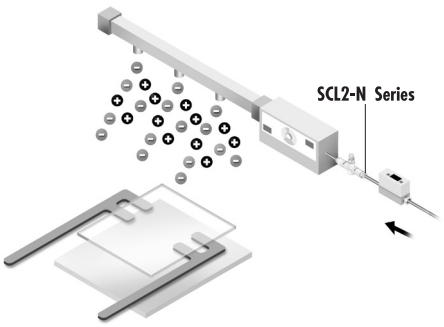

- ● Flow characteristics of ionizer purge gas
- ● Air blow in clean room
- ● N2 purge circuit
- ● Adjustment of workpiece unloading blow rate for disk former
- ● Flow rate control at tension control

Specifications

Model No.	SCL2-N-04	SCL2-N-06	SCL2-N-08	
Compatible tube O.D. mm	ø4	ø6	ø6	ø8
Working fluid	Compressed air/N_2 gas			
Max. working pressure MPa	1.0 (≈150 psi, 10 bar)			
Negative pressure kPa	-100 (≈-15 psi, -1 bar)			
Proof pressure MPa	1.5 (≈220 psi, 15 bar)			
Fluid temperature °C	5 (41°F) to 60 (140°F) (no freezing. Note)			
Ambient temperature °C	0 (32°F) to 60 (140°F) (no freezing)			
Weight g	11.5	16	32	33
Dial value (needle position)	12 (15 rotations for flow rate 010)			

Note: Freezing may occur due to adiabatic expansion depending on the air quality (dew point).

Flow characteristics

Flow rate code	010	050	150	300
Max. flow rate (at 0.5 MPa) L/min(ANR)	13	50	150	300
Effective cross-sectional area mm^2	0.2	0.7	2.2	4.5

Note: Flow rate is the atmospheric pressure conversion at 0.5 MPa.

How to order

● Needle valve Line type

SCL2 - N - 04 - H44 - 010 -

Model No.

Ⓐ Body size

Ⓑ Compatible tube O.D.

Refer to the table at right for the body size, compatible tube O.D., and flow rate combinations.

Ⓒ Flow rate type

Ⓓ Option

Code	Description
Ⓐ Body size	
04	M5 thread equivalent
06	1/8 thread equivalent
08	1/4 thread equivalent
Ⓑ Compatible tube O.D.	
H44	ø4
H66	ø6
H88	ø8
Ⓒ Flow rate	
010	Refer to
050	specifications and
150	flow rate
300	characteristics graph
Ⓓ Option	
Blank	Standard specifications
P80	Oil-prohibited specifications

Combination of body size, compatible tube O.D., and flow rate

Ⓒ Flow rate	Ⓐ Body size - Ⓑ Compatible tube O.D.			
	04-H44	06-H66	08-H66	08-H88
010	●	●		
050	●	●		
150		●		
300			●	●

Not available

Flow characteristics

● Flow rate "010"

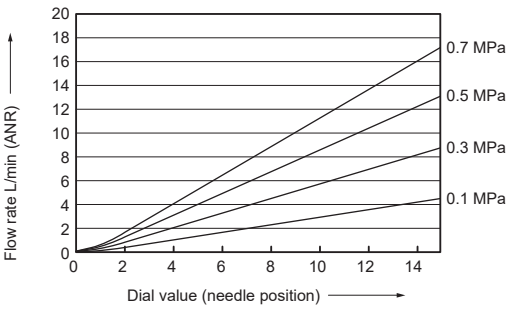

● Flow rate "150"

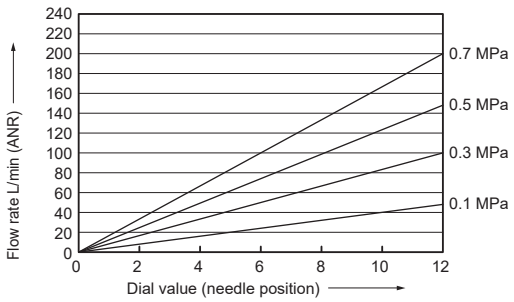

● Flow rate "050"

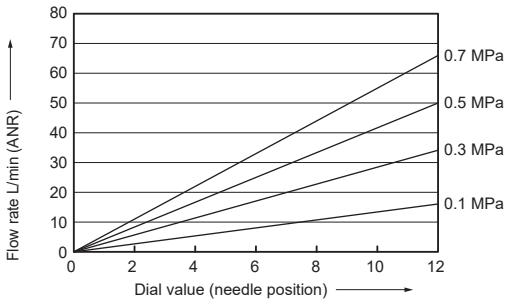

● Flow rate "300"

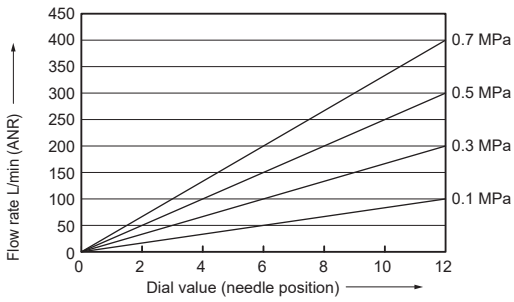

Internal structure and parts list

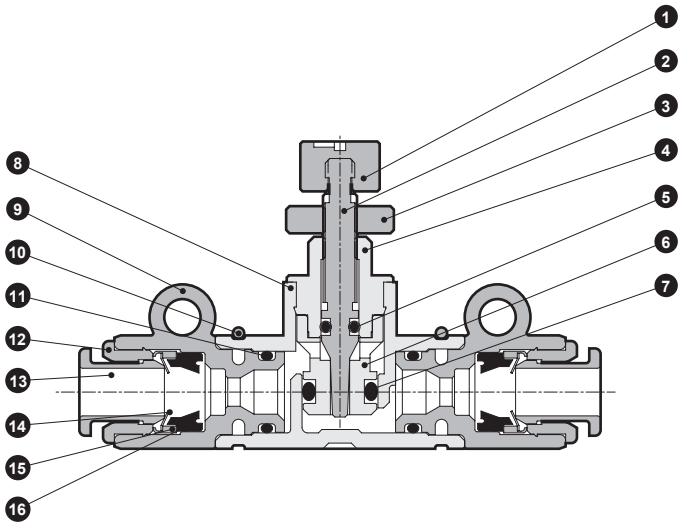

No.	Part name	Material
1	Knob	Polybutylene terephthalate
2	Needle	Copper alloy
3	Lock nut	Copper alloy
4	Guide ring	Copper alloy
5	O-ring	Nitrile rubber
6	Check bracket	Copper alloy
7	O-ring	Nitrile rubber
8	Body	Polybutylene terephthalate
9	Fitting case	Polybutylene terephthalate
10	Stopper ring	Stainless steel
11	O-ring	Nitrile rubber
12	Outer ring	Copper alloy
13	Push ring	Polybutylene terephthalate or polyacetal
14	Chuck	Stainless steel
15	Holder	Copper alloy or Polyether sulfone
16	Packing	Nitrile rubber (hydrogenated nitrile rubber) *2

*1 All the copper alloy parts have electroless nickel plating.
*2 ( ): When P80 is selected

Dimensions

CAD

● SCL2-N Series

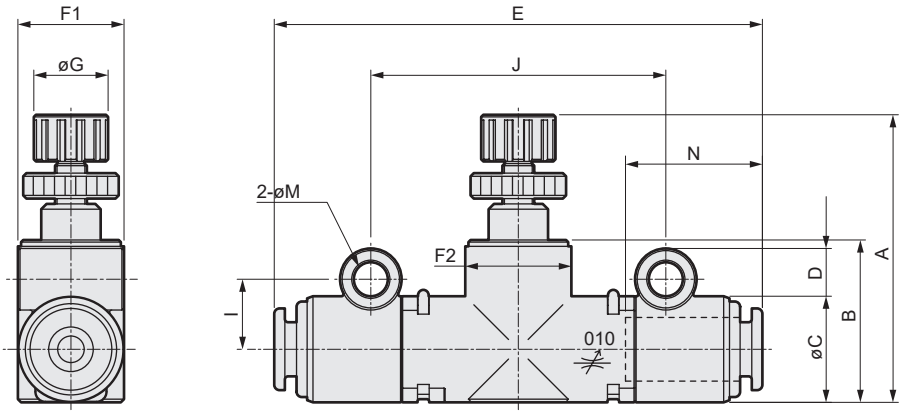

Model No.	Connected tube outer diameter	A MIN	A MAX	B	C	D	E	F1	F2	G	I	J	K	L	M (Mounting hole diameter)	N (tube insert length)
SCL2-N-04-H44	ø4	27.1	31.6	15.3	10	4.5	46	10	10.6	7	6.6	27.8	10xn+3.2	2.9	3.3	12.9
SCL2-N-06-H66	ø6	28.8	33.3	17.7	12	5.6	49.4	12	12.2	7	8.1	30.8	12xn+4.2	3.5	4.3	13.7
SCL2-N-08-H66	ø6	38	44.5	22.9	15	5.6	64	15	15.5	11	9.5	41	15xn+4	3.8		18
SCL2-N-08-H88	ø8						66.5									19

Note: F1 and F2 dimensions are oval.

* Can be distinguished from a speed controller with the color of the knob.
  Speed controller ..... White knob
  Needle valve ..... Gray knob
* The fitting push ring is blue for option P80 (oil-prohibited specifications).

Design/selection

⚠CAUTION

- Do not use this valve in circuits where ozone is generated intentionally.
  Ozone resistance is sufficient for naturally generated ambient ozone. Check packing deteriorates if ozone levels are high.

- This valve cannot be used as a stop valve that requires no leakage. Slight leakage is allowed for in this product's specifications.

- Note that not all of the resin parts of the needle valve are flame-resistant.

- The flow path in the needle valve is not completely free of dust generation. A final clean filter should be used in circuits where dust generation could be a problem.

Mounting, installation and adjustment

⚠CAUTION

- Rotate the mounting hole section in a non-pressurized state.

- When mounting on a panel, the stopper ring will interfere with the panel, so insert a flat washer between the mounting hole and panel.

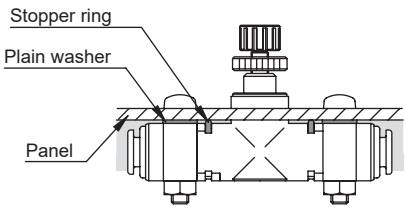

- Tighten bolts in mounting holes using the torques (or less) shown below.

Model No.	Tightening torque
SCL(D)2-04	0.5 N·m
SCL(D)2-06/08/10	0.8 N·m

- As tubing may be dislocated due to product oscillation or torsion, fix the product with bolts or Insulok ties, etc., when piping.

- Do not turn the dial forcibly when fully closing or opening it (0.05 N·m or less). Do not use the lock nut to adjust the needle. Otherwise this could cause needle galling or damage.

- Tightening the lock nut excessively can cause problems. Do not use a torque higher than what is indicated in the following table.

Model No.	Tightening torque
SCL(D)2-04/06	0.2 N·m
SCL(D)2-08/10	0.3 N·m

- The adjustment knob of the "P80 (oil-prohibited specifications)" option may be slightly hard to turn.

- There is no directionality for needle valve piping.

- Connect the fiber tube (ø1.8 fitting) in the following procedure ((1) to (5)).

(1) Set the collar at the very back.

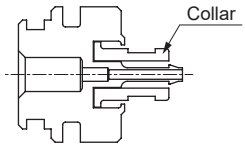

(2) Cut the end of fiber tube at a right angle.

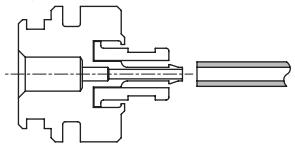

(3) Pass the collar through, and confirm that the fiber tube is correctly inserted while carrying out the work.

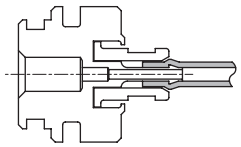

(4) Insert fiber tube to the last position.

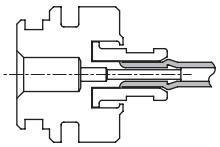

(5) Pull the collar forward to lock it.

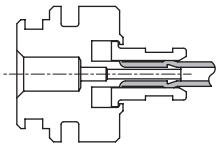

SCP*3
CMK2
CMA2
SCM
SCG
SCA2
SCS2
CKV2
CAV2/COVP/N2
SSD2
SSG
SSD
CAT
MDC2
MVC
SMG
MSD/MSDG
FC*
STK
SRL3
SRG3
SRM3
SRT3
MRL2
MRG2
SM-25
ShkAbs
FJ
FK
Spd Contr
Ending

Example of in/out speed controller

1 Speed is stabilized by controlling with an in/out speed controller.

[Example 1] In low-speed control with a single rod cylinder, the cylinder pops out immediately after the PUSH side operates if a meter-out circuit is used.[Example 2] When vertically mounted, the cylinder pops out immediately after actuation because of the load weight.
Speed is stabilized by using a meter in/out circuit.

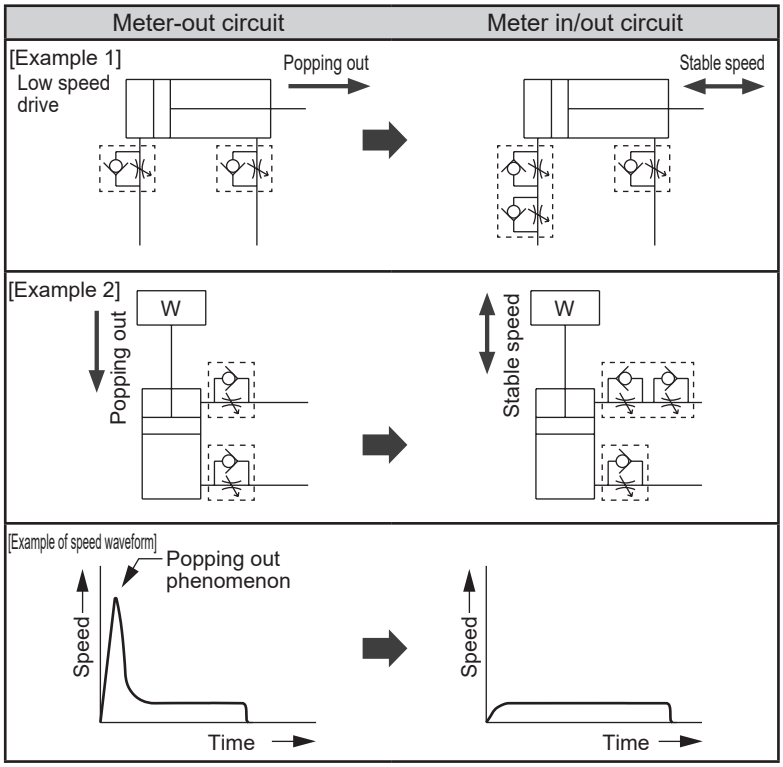

[Cause of popping out phenomenon]
When using the meter-out circuit, flow on the exhaust side is restricted, so both sides reach the same pressure immediately after the valve is switched. The thrust equivalent to the difference in the piston's pressurized area or the thrust equivalent to the load's weight causes popping out.
When the piston moves, exhaust pressure rises, speed decelerates, and the set speed is reached.
If popping out is caused by this phenomenon, fluctuation in sudden thrust is suppressed by restricting the flow on the supply side, and popping out is resolved.

2 Danger can be prevented by suppressing popping out at the beginning of movement after residual pressure is released.

3 Reciprocating speed control is possible with a single acting cylinder.

MEMO

Speed controller stainless steel corrosion-resistant

SC3P Series

● Port size: M5, R1/8 to R1/2

JIS symbol

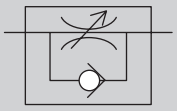

RoHS CAD

Features

- The speed control valve uses highly anti-corrosive stainless steel equivalent to SUS303 (Cr 20% and Mo 2%). As copper alloy material is not used, this product is suitable for atmospheres where copper ions should be avoided.
- Standard ozone-resistant materials
  Ozone-proof materials for degradation prevention are used as a standard for the check packing.
- Ecological products
  With this RoHS Directive compatible product, all substances which adversely affect the global environment have been eliminated from the materials.

Specifications

Model No.		SC3P														
Item		SC3P-M5		SC3P-6			SC3P-8			SC3P-10				SC3P-15		
Compatible tube O.D.	mm	ø4	ø6	ø4	ø6	ø8	ø6	ø8	ø10	ø6	ø8	ø10	ø12	ø8	ø10	ø12
Working fluid		Compressed air														
Max. working pressure	MPa	0.9 (≈130 psi, 9 bar)														
Min. working pressure	MPa	0.1 (≈15 psi, 1 bar)														
Proof pressure	MPa	1.35 (≈200 psi, 13.5 bar)														
Ambient temperature	°C	0 (32°F) to 60 (140°F) (no freezing)														
Port size	Rc	M5		R1/8			R1/4			R3/8				R1/2		
Weight	g	7	7.6	17	17	20	33	36	39	63	63	66	69	95	98	101
Dial value (needle position)		7 or more		12 or more			13 or more									

*1: Freezing may occur by adiabatic expansion depending on the air quality (dew point).

How to order

SC3P - 8 - 8 - I

- SC3P: Model No.
- 8: Ⓐ Port size
- 8: Ⓑ Compatible tube O.D.
- I: Ⓒ Option

Code	Description
Ⓐ Port size	
M5	M5x0.8
6	R1/8
8	R1/4
10	R3/8
15	R1/2

Ⓑ Compatible tube O.D.

		Piping size				
		M5	6	8	10	15
4	**ø4**	●	●			
6	**ø6**	●	●	●	●	
8	**ø8**		●	●	●	●
10	**ø10**			●	●	●
12	**ø12**				●	●

Ⓒ Option

Blank	Meter-out control
I	Meter-in control

is not available.

Flow rate and effective cross-sectional area

Model No.		SC3P														
Item		SC3P-M5		SC3P-6			SC3P-8			SC3P-10				SC3P-15		
Compatible tube O.D.	mm	ø4	ø6	ø4	ø6	ø8	ø6	ø8	ø10	ø6	ø8	ø10	ø12	ø8	ø10	ø12
Free flow	Flow rate L/min(ANR)	55		200		230	390	400		600	800		840	1140	1380	
	Effective cross-sectional area mm^2	0.9		3		3.5	5.9	6		9	12		12.5	17	21	
Controlled flow	Flow rate L/min(ANR)	70		150			270			550	850	920		1100	1450	1600
	Effective cross-sectional area mm^2	1.1		2.3			4			8	12.8	14		16.5	22	24

*1: Flow rate is the atmospheric pressure conversion value at pressure 0.5 MPa.
*2: The effective cross-sectional area lists the value converted from the flow rate.

Flow characteristics

[Free flow]

● SC3P-M5-*

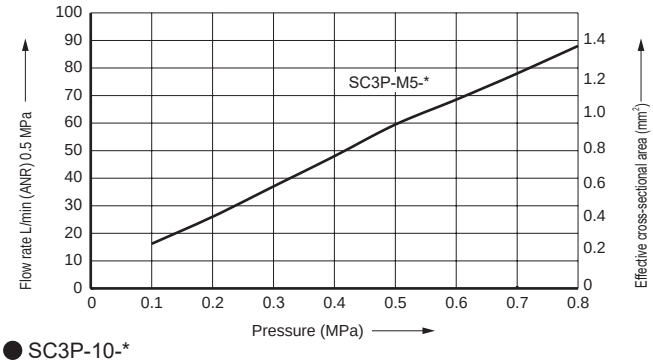

● SC3P-6-*, SC3P-8-*

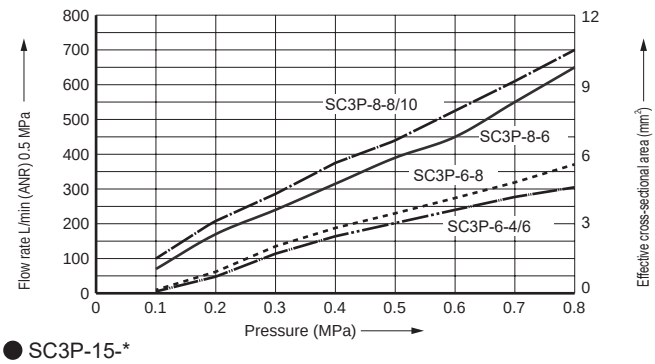

● SC3P-10-*

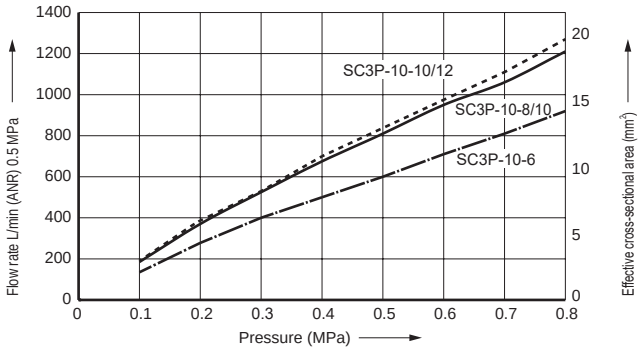

● SC3P-15-*

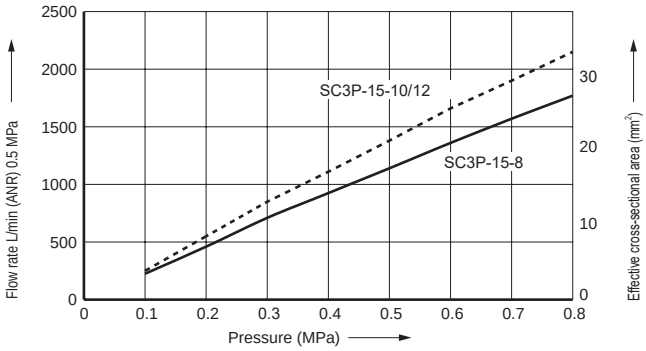

[Controlled flow]

● SC3P-M5-*

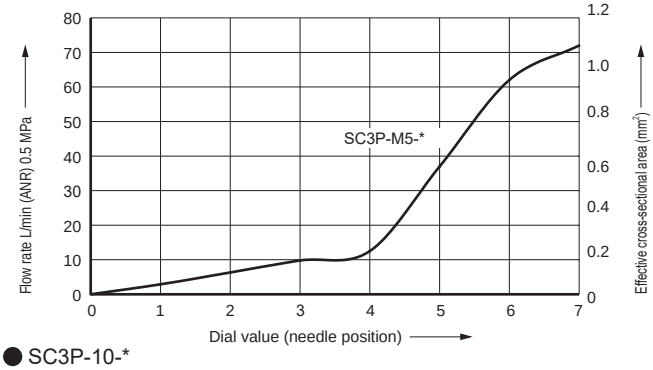

● SC3P-6-*, SC3P-8-*

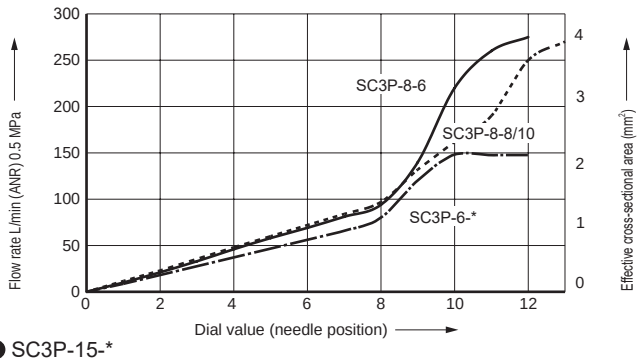

● SC3P-10-*

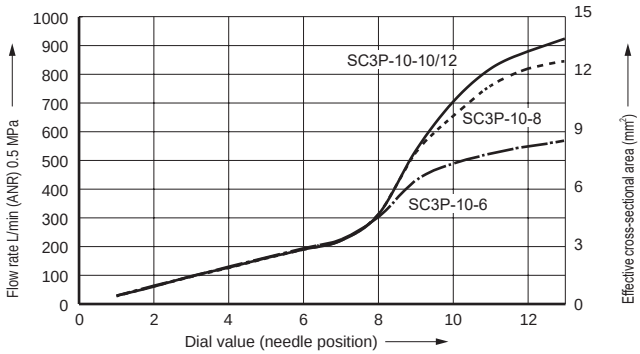

● SC3P-15-*

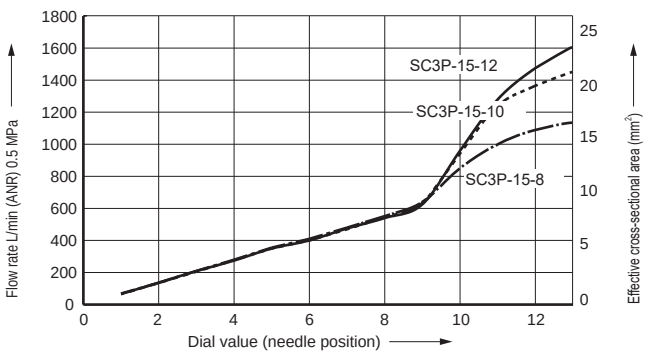

SCP*3
CMK2
CMA2
SCM
SCG
SCA2
SCS2
CKV2
CAV2/COVP/N2
SSD2
SSG
SSD
CAT
MDC2
MVC
SMG
MSD/MSDG
FC*
STK
SRL3
SRG3
SRM3
SRT3
MRL2
MRG2
SM-25
ShkAbs
FJ
FK
Spd Contr
Ending

Dimensions

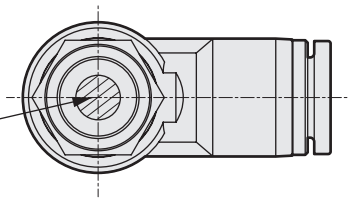

Identification

Stamp	Control method
A	Meter-out control
B	Meter-in control

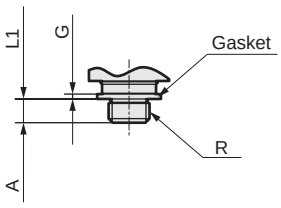

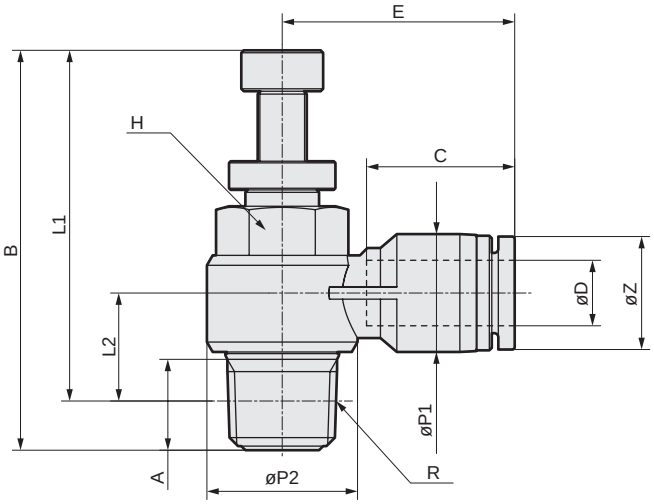

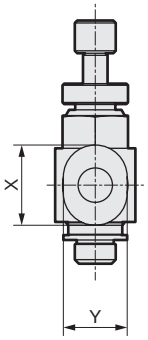

Code / Model No.	øD tube O.D.	R	A	B MAX	B MIN	L1 MAX	L1 MIN	L2	øP1	øP2	C tube end	E	H opposite side	øZ	X	Y
SC3P-M5-4	ø4	M5x0.8	3.2	29.7	27.0	26.5	23.8	6.4	8	9.8	11.3	15.7	8	-	9.8	7.8
SC3P-M5-6	ø6							7.2	10.5		11.8	17.7		-	11.8	9.8
SC3P-6-4	ø4	R1/8	8	41.5	34.9	37.5	30.9	10.7	8	14.4	11.3	18	10	-	9.8	7.8
SC3P-6-6	ø6							10.7	10.5		11.8	18.5		-	11.8	9.8
SC3P-6-8	ø8							11.9	14.4		18.1	26.9		13.8	-	-
SC3P-8-6	ø6	R1/4	11.1	48.9	42.2	42.8	36.1	11.9	10.5	18.4	11.8	20.4	14	-	11.8	9.8
SC3P-8-8	ø8							13.2	14.4		18.1	28.4		13.8	-	-
SC3P-8-10	ø10							14.8	17.6		20.2	30.9		16.8	-	-
SC3P-10-6	ø6	R3/8	13.2	54.4	46.9	48	40.5	15.4	14.4	22	17	29	19	11.8	-	-
SC3P-10-8	ø8							15.4	14.4		18.1	28.9		13.8	-	-
SC3P-10-10	ø10							16.7	17.6		20.2	31.2		16.8	-	-
SC3P-10-12	ø12							18.4	21		23.4	36.9		19.8	-	-
SC3P-15-8	ø8	R1/2	16	59.7	52.4	51.5	44.2	18	14.4	28	18.1	31	24	13.8	-	-
SC3P-15-10	ø10							18	17.6		20.2	33.6		16.8	-	-
SC3P-15-12	ø12							19.7	21		23.4	36.4		19.8	-	-

* The taper female thread L1 and L2 dimensions are the reference dimensions after tightening.

Internal structure and parts list

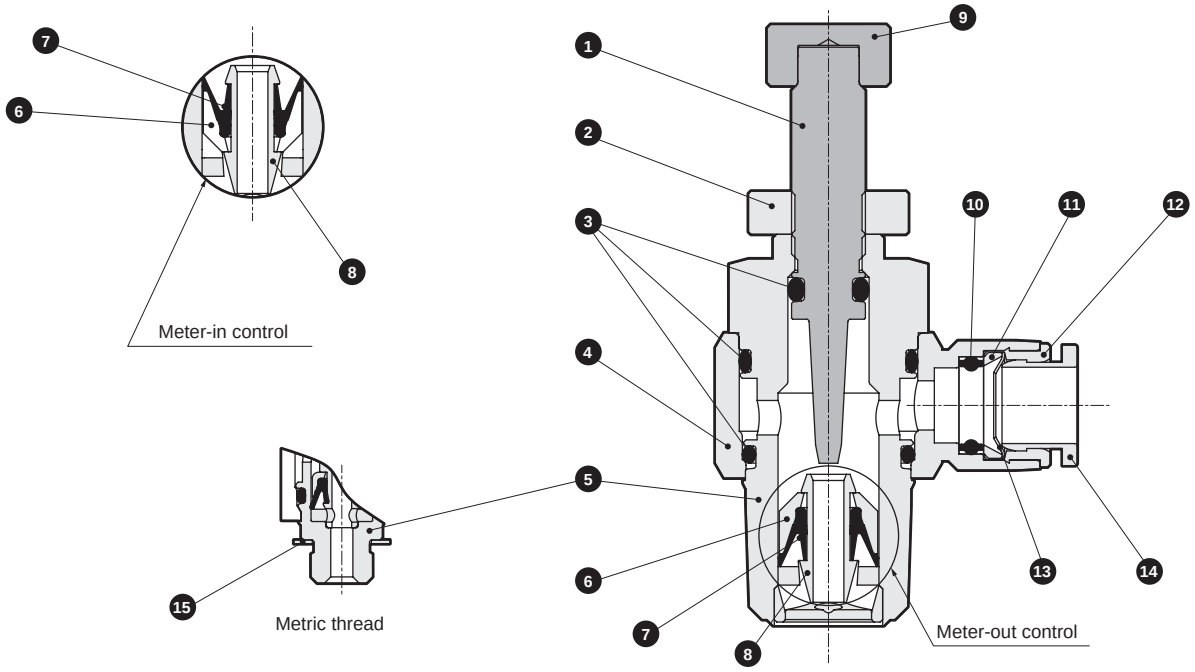

No.	Part name	Material	No.	Part name	Material
1	Needle	Stainless steel (SUS303 or equivalent)	9	Knob	Stainless steel (SUS303 or equivalent)
2	Lock nut	Stainless steel (SUS303 or equivalent)	10	Elastic sleeve	Hydrogenated nitrile rubber
3	O-ring	Hydrogenated nitrile rubber	11	Lock ring	Stainless steel (SUS303 or equivalent)
4	Resin body	Polybutylene terephthalate	12	Guide ring	Stainless steel (SUS303 or equivalent)
5	Metal body	Stainless steel (SUS303 or equivalent)	13	Lock claw	Stainless steel (SUS301)
6	Basket	Polybutylene terephthalate	14	Release ring	Polyacetal
7	Check packing	Hydrogenated nitrile rubber	15	Gasket	Polyphenylene sulfide
8	Core guide	Stainless steel (SUS303 or equivalent)			

Safety precautions

- Always use within the product specifications.
- This product is used for compressed air. Do not use this unit for other fluids.
- Securely insert the tube to the tube end, and make sure that the tube cannot be pulled off.
- Cut the tube with a dedicated cutter and always at a right angle.
- Remove all cutting chips and foreign matter generated during piping and tube insertion before starting use.
- Provide sufficient allowance in the tube so that it does not bend sharply.
- Avoid using this product in a hot humid place, outdoors or where it is subject to direct sunlight.
- Avoid using this product in places with high levels of vibration or impact.
- The needle tolerates a slight leak even when fully closed, so do not use it as a stop valve.
- Stop air flow and confirm that there is no residual pressure before replacing the tube.
- The chemical resistance level is equivalent to SUS440. This product cannot be used when a higher chemical resistance is required.
- Be sure to contact CKD when using in a corrosive atmosphere.
  The fitting body could be damaged under some conditions.

■ Precautions for piping

- Always use within the recommended tightening torque range.
- Do not tighten while pressure is applied.
- Stop air flow and confirm that there is no residual pressure before replacing the tube.
- Mounting is possible by rotating in an arbitrary direction, but do not use this product in applications involving constant rotation or oscillation.

[Recommended tightening torque]

Port thread	Tightening torque N·m
M5	1.0 to 1.5
R1/8	7 to 9
R1/4	12 to 14
R3/8	22 to 24
R1/2	28 to 30

Speed controller direct piping/elbow

SC3R Series

● Port size: M5, Rc1/8 to Rc1/2

JIS symbol

(Meter-out)

(Meter-in)

RoHS CAD

Specifications

Item		SC3R-M5	SC3R-6	SC3R-8	SC3R-10	SC3R-15
Working fluid		Compressed air				
Max. working pressure MPa		1.0 (≈150 psi, 10 bar)				
Min. working pressure MPa		0.05 (≈7.3 psi, 0.5 bar)				
Proof pressure MPa		1.5 (≈220 psi, 15 bar)				
Fluid temperature °C		5 (41°F) to 60 (140°F) (no freezing) *2				
Ambient temperature °C		0 (32°F) to 60 (140°F) (no freezing)				
Port size		M5	Rc1/8	Rc1/4	Rc3/8	Rc1/2
Weight g		14	40	70	110	190
Cylinder bore size mm		ø6 to ø16	ø15 to ø32	ø20 to ø50	ø32 to ø75	ø40 to ø110
Dial value (needle position)		11	14	14	14	16
Free flow	Flow rate L/min(ANR)	80	270	500	1100	1600
	Eff. X-sectional area mm^2	1.2	4.0	7.5	16	24
Controlled flow	Flow rate L/min(ANR)	47	240	470	1100	1600
	Eff. X-sectional area mm^2	0.7	3.6	7.0	15	24

*1: Flow rate is the atmospheric pressure conversion at 0.5 MPa.
*2: Freezing may occur due to adiabatic expansion depending on the air quality (dew point).

SC3R – M5 – I

Ⓐ Port size

Ⓑ Option

Code	Description
Ⓐ Port size	
M5	M5x0.8
6	Rc1/8
8	Rc1/4
10	Rc3/8
15	Rc1/2
Ⓑ Option	
I	Meter-in
Blank	Meter-out

Ozone-proof specifications

(Ending Page 137)

SC3R – ····· – P11

Clean-room specifications

(Catalog No. CB-033SA)

● Anti-dust generation structure for use in cleanrooms

SC3R – ····· – P7*

Flow characteristics

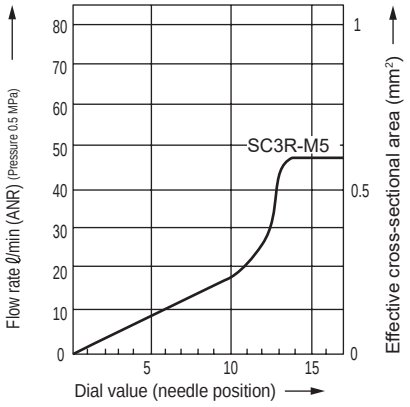

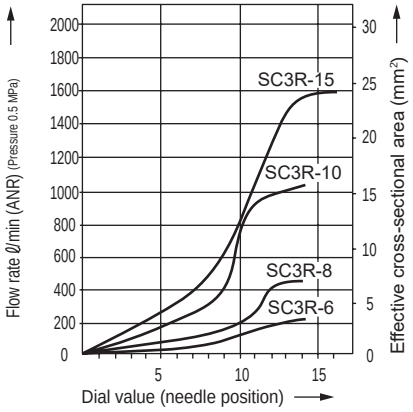

Internal structure and parts list

● SC3R-M5

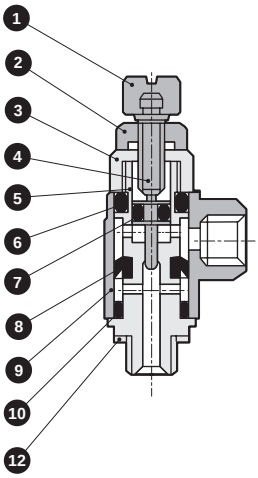

● SC3R-6 to 15

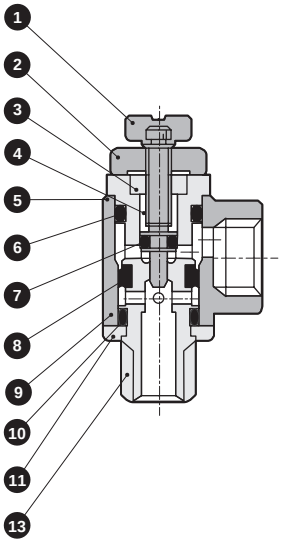

No.	Part name	Material
1	Knob	Copper alloy
2	Lock nut	Copper alloy
3	Gland nut	Copper alloy
4	Needle	Stainless steel
5	Rotary shaft	Copper alloy
6	O-ring	Nitrile rubber
7	O-ring	Nitrile rubber
8	Packing	Hydrogenated nitrile rubber
9	Rotor	Zinc die-casting (copper alloy)
10	O-ring	Nitrile rubber
11	Snap ring	Polybutylene terephthalate resin
12	M5 gasket	Nitrile rubber + steel
13	Sealant	Fluorinated resin

* ( ): SC3R-M5
* All the copper alloy parts have electroless nickel plating.

Dimensions

CAD

● SC3R-M5

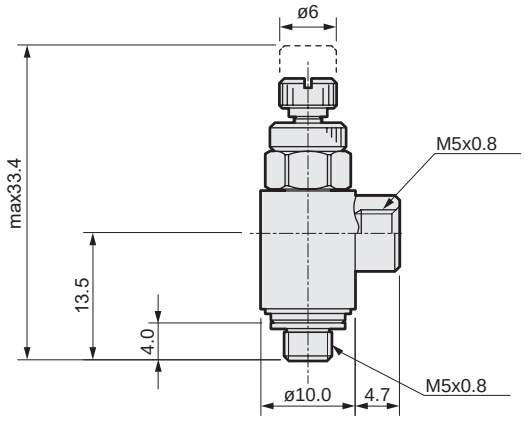

● SC3R-6 to 15

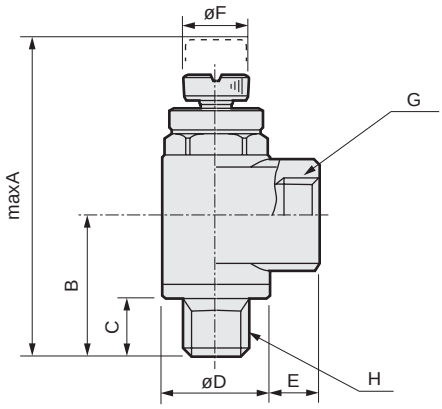

Model No.	A	B	C	D	E	F	G	H
SC3R-6	42.5	18.8	7.7	15.0	6.7	9	Rc1/8	R1/8
SC3R-8	51.2	23.2	10.7	19.0	9.4	12	Rc1/4	R1/4
SC3R-10	60.2	27.0	11.7	22.5	10.0	14	Rc3/8	R3/8
SC3R-15	66.7	30.0	14.7	27.0	13.7	16	Rc1/2	R1/2

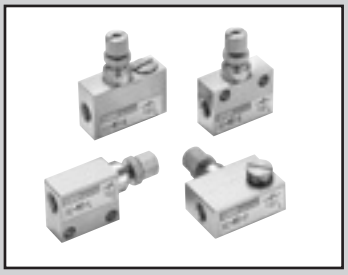

Miniature speed controller

SC-M3/M5

Compact and lightweight enabling space-saving piping. Low speed and fine speed are available.

JIS symbol

SC-M5-S
SC-M5-F

SC-M5-L
SC-M5-A

RoHS CAD

Specifications

Item		SC-M3-S	SC-M3-L	SC-M3-F	SC-M3-A	SC-M5-S	SC-M5-L	SC-M5-F	SC-M5-A
Working fluid		Compressed air							
Max. working pressure MPa		0.7 (≈100 psi, 7 bar)							
Min. working pressure MPa		0.1 (≈15 psi, 1 bar)							
Proof pressure MPa		1.05 (≈150 psi, 10.5 bar)							
Fluid temperature °C		5 (41°F) to 60 (140°F) (no freezing) *1							
Ambient temperature °C		0 (32°F) to 60 (140°F) (no freezing)							
Port size		M3				M5			
Weight g		1.7	1.5	2.4	2.4	5.6(6)	4.8(5.2)	7.9(8.3)	8.5(8.9)
Cylinder bore size mm		ø2.5 to ø10				ø6 to ø25			
Dial value (needle position)		10				10(14)			
Free flow	Flow rate L/min(ANR)	20				53			
	Eff. X-sectional area mm^2	0.3				0.8			
Controlled flow	Flow rate L/min(ANR)	16				47(6.7)			
	Eff. X-sectional area mm^2	0.25				0.7(0.1)			

*1: Freezing may occur due to adiabatic expansion depending on the air quality (dew point).
*2: Flow rate is the atmospheric pressure conversion at 0.5 MPa.
*3: Values in ( ) indicate fine speed.

Flow characteristics

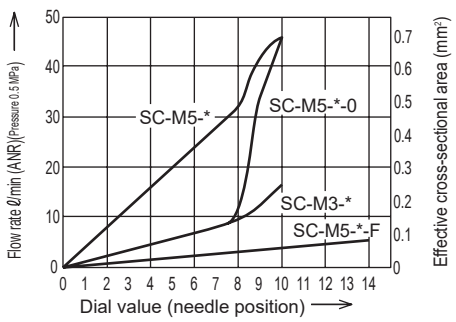

How to order

SC - M3 - A - I F

Ⓐ Port size
Ⓑ Shape
Ⓒ Control method
Ⓓ Flow characteristics

Code	Description
Ⓐ Port size	
M3	M3x0.5
M5	M5x0.8
Ⓑ Shape	
S	Straight
L	Elbow
F	Flat
A	Adjustable
Ⓒ Control method	
Blank	Meter-out
I	Meter-in
Ⓓ Flow characteristics	
Blank	Standard
O	Low speed (M5 only)
F	Fine speed (M5 only)

*1: For fine speed, the lock nut exterior is blue.
2: Not available for SC--S-I. Install SC-*-S with reverse-mounted IN and OUT.

Internal structure and parts list

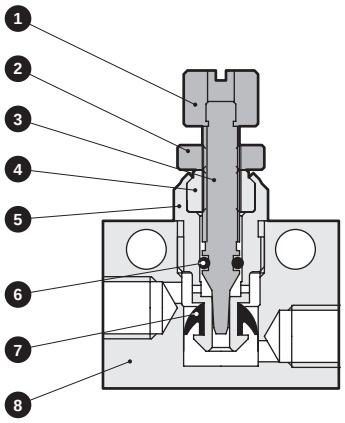

No.	Part name	Material
1	Knob	Aluminum alloy
2	Lock nut	Aluminum alloy
3	Needle	Stainless steel
4	Needle guide	Aluminum alloy
5	Check bracket	Aluminum alloy
6	O-ring	Nitrile rubber
7	Packing	Hydrogenated nitrile rubber
8	Body	Aluminum alloy

Note: For fine speed, the material of the needle guide is stainless steel.

Dimensions

● SC-M3/M5-S (straight)

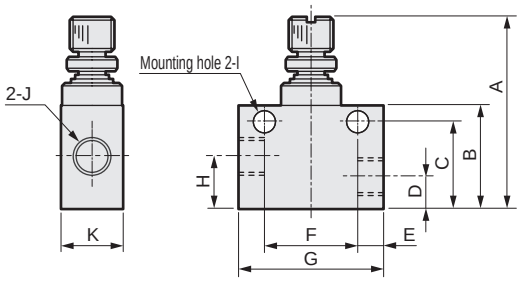

Model No.	A	B	C	D	E	F	G	H	I	J	K
SC-M3-S	18.5(max21)	9	7.3	2.5	2.5	8	13	4.2	ø2.2	M3x0.5	5
SC-M5-S	25(max28.5)	13.5	11.2	4.2	3.5	12	19	6.5	ø3.2	M5x0.8	8

● SC-M3/M5-L (elbow)

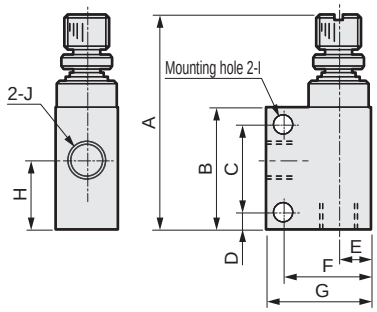

Model No.	A	B	C	D	E	F	G	H	I	J
SC-M3-L	20.3(max22.8)	10.5	7	1.9	2.5	6.5	9	5.7	ø2.2	M3x0.5
SC-M5-L	27.5(max31)	16	11.5	2.2	4.3	11.2	13.5	9	ø3.2	M5x0.8

● SC-M3/M5-F (flat)

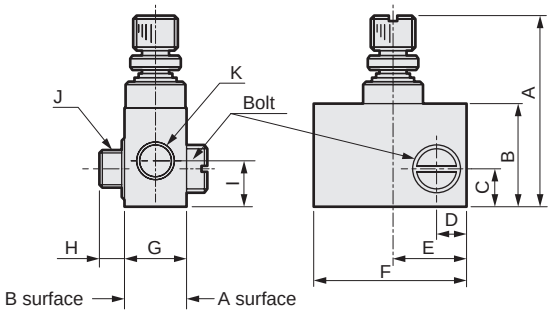

Model No.	A	B	C	D	E	F	G	H	I	J	K
SC-M3-F	18.5(max21)	9	3.4	2.7	6.5	13	5	3	4.2	M3x0.5	M3x0.5
SC-M5-F	25(max28.5)	13.5	5.1	4	10.5	20	8	3.5	6.5	M5x0.8	M5x0.8

Note: The bolt can be removed from the main body and installed from either A or B surfaces.

● SC-M3/M5-A (adjustable)

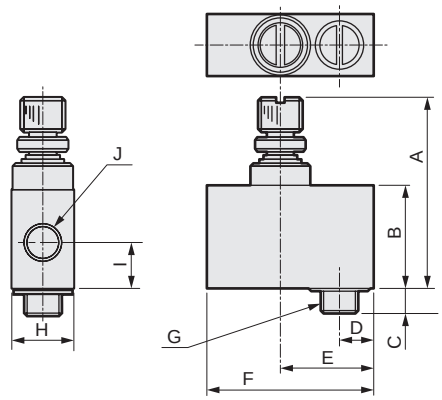

Model No.	A	B	C	D	E	F	G	H	I	J
SC-M3-A	18.5(max21)	9	3	3.2	8	14.5	M3x0.5	5	4.2	M3x0.5
SC-M5-A	25(max28.5)	13.5	3.5	4.5	12.5	22	M5x0.8	8	6.5	M5x0.8

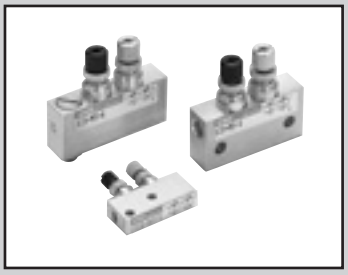

Miniature meter-in meter-out speed controller

SCD-M3/M5 Series

Compact, lightweight and thin body. Speed control valve for air supply and exhaust.

JIS symbol

● SCD-M*-S (Straight)

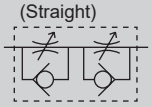

● SCD-M*-A (Adjustable)

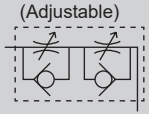

RoHS CAD

Specifications

Item	SCD-M3-S	SCD-M3-A	SCD-M5-S	SCD-M5-A	SCD-M5-S-F	SCD-M5-A-F
Working fluid	Compressed air					
Max. working pressure MPa	0.7 (≈100 psi, 7 bar)					
Min. working pressure MPa	0.1 (≈15 psi, 1 bar)					
Proof pressure MPa	1.05 (≈150 psi, 10.5 bar)					
Fluid temperature °C	5 (41°F) to 60 (140°F) (no freezing. *1)					
Ambient temperature °C	0 (32°F) to 60 (140°F) (no freezing)					
Port size	M3x0.5		M5x0.8			
Cylinder bore size mm	ø4 to ø8		ø6 to ø25			
Dial value (needle position)	10				14	
Weight g	3.1	3.9	10	11.7	10.8	12.5
Control flow rate L/min(ANR)	13		37		6.7	
Eff. X-sectional area mm^2	0.2		0.55		0.1	

*1: Freezing may occur due to adiabatic expansion depending on the air quality (dew point).
*2: Flow rate is the atmospheric pressure conversion at 0.5 MPa.

How to order

SCD - M3 - S - F

Model No.

Ⓐ Port size

Ⓑ Shape

Ⓒ Flow characteristics

Code	Description
Ⓐ Port size	
M3	M3x0.5
M5	M5x0.8
Ⓑ Shape	
S	Straight
A	Adjustable
Ⓒ Flow characteristics	
Blank	Standard
F	Fine speed (M5 only)

*1: For fine speed, the lock nut exterior is blue.

Flow characteristics

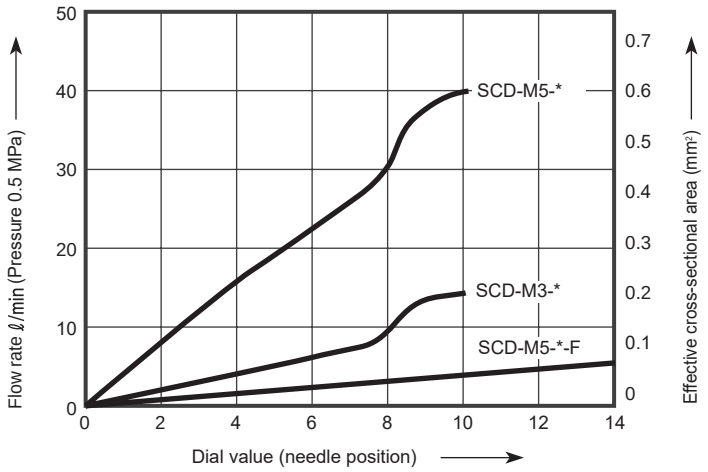

Internal structure and parts list

● Adjustable

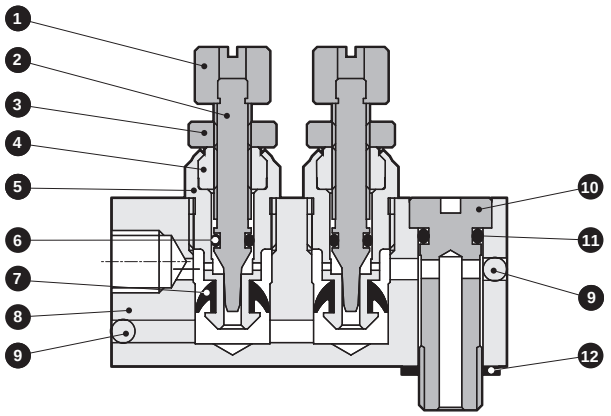

No.	Part name	Material
1	Knob	Aluminum alloy
2	Needle	Stainless steel
3	Lock nut	Aluminum alloy
4	Needle guide	Aluminum alloy (Stainless steel for fine speed)
5	Check bracket	Aluminum alloy
6	O-ring	Nitrile rubber
7	Packing	Hydrogenated nitrile rubber
8	Body	Aluminum alloy
9	Steel ball	Stainless steel
10	Bolt	Copper alloy
11	O-ring	Nitrile rubber
12	Gasket	Steel + nitrile rubber

*1: For the outside of handle, one side is painted with black.
(For adjustable, black indicates meter-in)
*2: The materials are the same for the straight (without ❿⓫⓬).
*3: Copper alloy parts have electroless nickel plating.

Dimensions

● SCD-M3-S (straight)

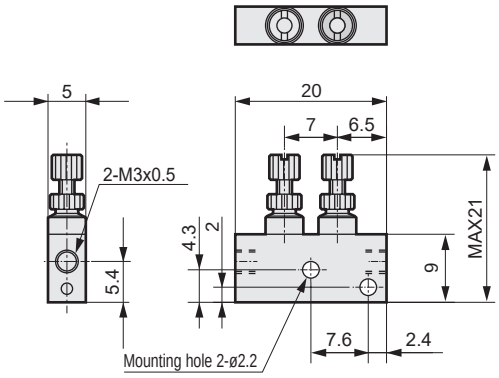

● SCD-M3-A (adjustable)

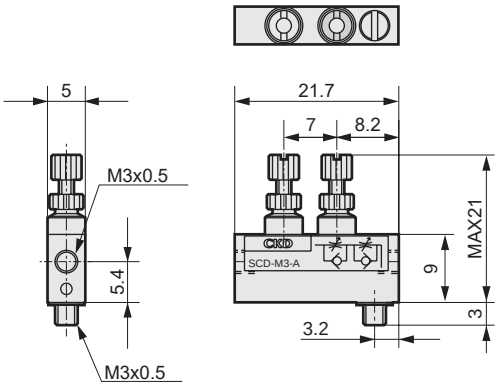

● SCD-M5-S (straight)

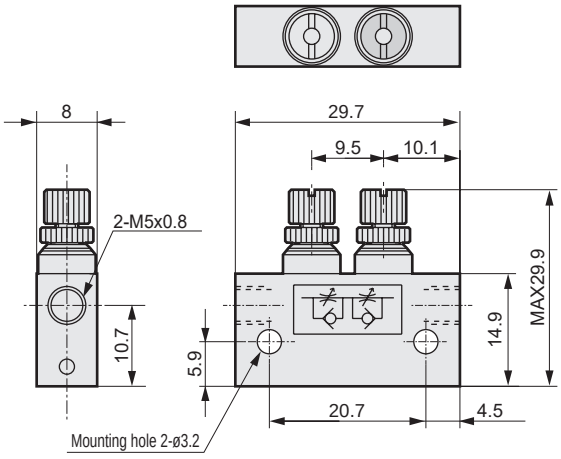

● SCD-M5-A (adjustable)

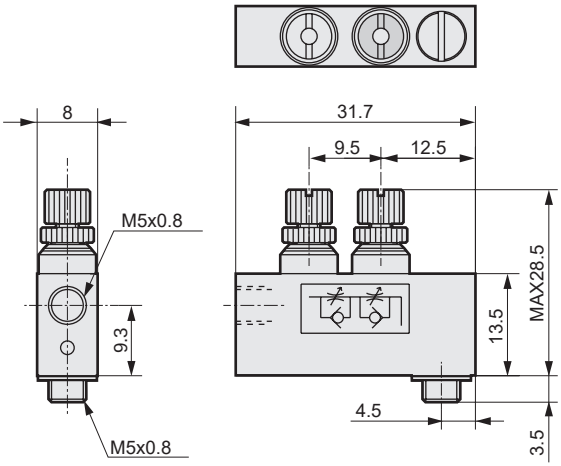

Applications

1 Speed is stabilized by controlling with an in/out speed controller.

[Example 1] In low-speed control with a single rod cylinder, the cylinder pops out immediately after the PUSH side operates if a meter-out circuit is used.

[Example 2] When vertically mounted, the cylinder pops out immediately after actuation because of the load weight.

Speed is stabilized by using a meter in/out circuit.

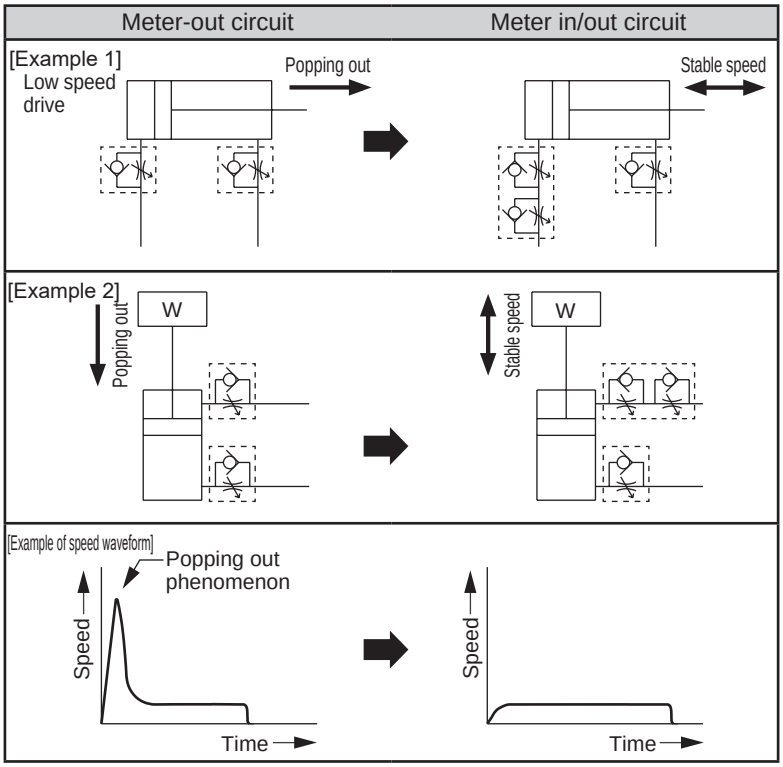

[Cause of popping out phenomenon]

When using the meter-out circuit, flow on the exhaust side is restricted, so both sides reach the same pressure immediately after the valve is switched. The thrust equivalent to the difference in the piston's pressurized area or the thrust equivalent to the load's weight causes popping out. When the piston moves, exhaust pressure rises, speed decelerates, and the set speed is reached.

If popping out is caused by this phenomenon, fluctuation in sudden thrust is suppressed by restricting the flow on the supply side, and popping out is resolved.

2 Danger can be prevented by suppressing popping out at the beginning of movement after residual pressure is released.

3 Reciprocating speed control is possible with a single acting cylinder.

4 The flow rate of the air operated valve and drip prevention valve can be finely adjusted.

MEMO

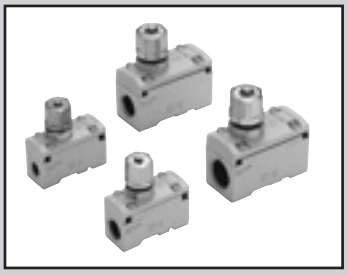

Speed controller medium bore size

SC1 Series

● Port size: Rc1/8 to Rc1/2

JIS symbol

RoHS CAD

Specifications

Item		SC1-6	SC1-8	SC1-10	SC1-15
Working fluid		Compressed air			
Max. working pressure MPa		1.0 (≈150 psi, 10 bar)			
Min. working pressure MPa		0.05 (≈7.3 psi, 0.5 bar)			
Proof pressure MPa		1.5 (≈220 psi, 15 bar)			
Fluid temperature °C		5 (41°F) to 60 (140°F) (no freezing *2) (5°C (41°F) to 120°C (248°F) for heat-resistant/ozone-proof specifications)			
Ambient temperature °C		0 (32°F) to 60 (140°F) (no freezing) (5°C (41°F) to 120°C (248°F) for heat-resistant/ozone-proof specifications)			
Port size Rc		1/8	1/4	3/8	1/2
Weight g		100	95	205	195
Cylinder bore size mm		ø20 to ø50	ø32 to ø75	ø50 to ø140	ø80 to ø160
Dial value (needle position)		10	10	10	10
Free flow	Flow rate L/min(ANR)	730	930	2600	2900
	Eff. X-sectional area mm^2	11	14	39	43
Controlled flow	Flow rate L/min(ANR)	530	870	1500	2400
	Eff. X-sectional area mm^2	8	13	22	36

*1: Flow rate is the atmospheric pressure conversion at 0.5 MPa.
*2: Freezing may occur due to adiabatic expansion depending on the air quality (dew point).

How to order

SC1 – 6 – X1

Ⓐ Port size

Ⓑ Option

Code	Description
Ⓐ Port size	
6	Rc1/8
8	Rc1/4
10	Rc3/8
15	Rc1/2
Ⓑ Option 1	
Blank	No option
X1	Heat resistance (120°C or less)/ozone-proof specifications
P6	Copper and PTFE free specifications

Flow characteristics

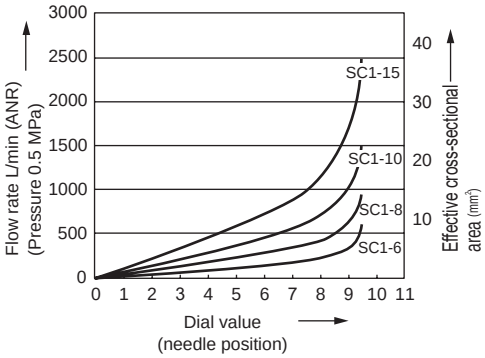

Clean-room specifications (Catalog No. CB-033SA)

● Anti-dust generation structure for use in cleanrooms

SC1 – ····· – P7*

Internal structure and parts list

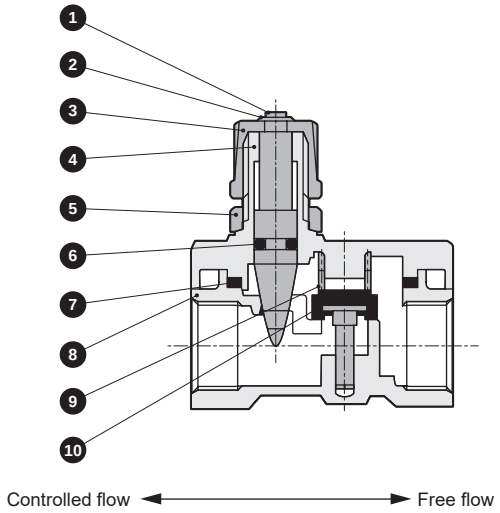

No.	Part name	Material
1	Needle	Copper alloy
2	E type snap ring	Steel
3	Knob	Zinc die-casting
4	Needle guide	Aluminum die-casting
5	Lock nut	Zinc die-casting
6	O-ring	Nitrile rubber (fluoro rubber)
7	Gasket	Nitrile rubber (fluoro rubber)
8	Body	Aluminum die-casting
9	Spring	Stainless steel
10	Valve seat	Copper alloy/nitrile rubber (copper alloy/fluoro rubber)

*1: ( ): Heat resistance/ozone-proof specifications

Dimensions

● SC1

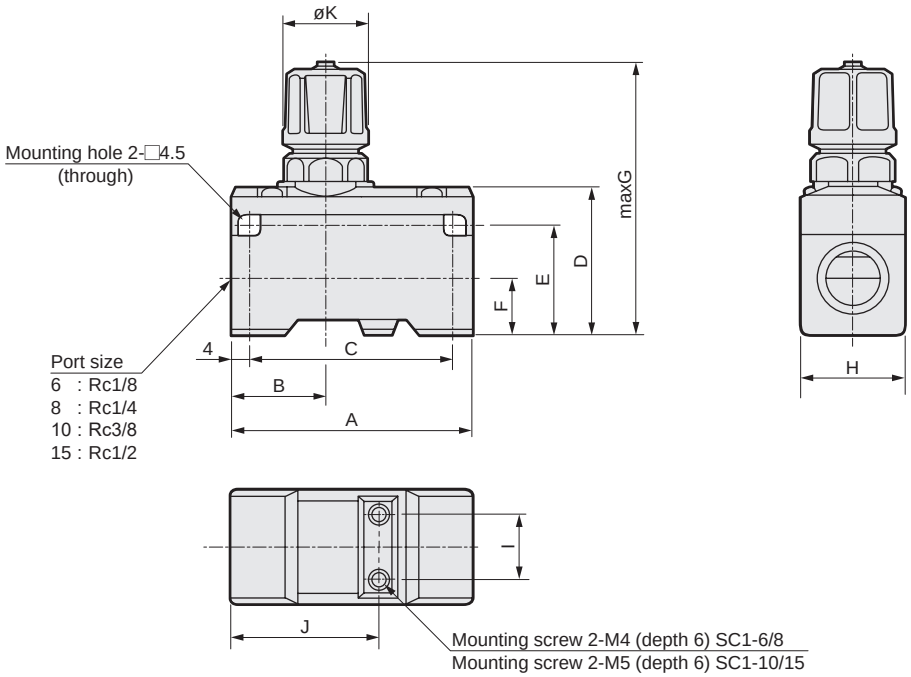

Model No.	A	B	C	D	E	F	G	H	I	J	K
SC1-6/8	50	20	42	31	23	11	67	22	12	31	19
SC1-10/15	63	21	55	40	31	15	83	30	18	37	23

⚠ Safety precautions

- When operating in the low pressure range (0.05 MPa or less), or when the piping, etc., before and after the product are excessively constricted, note that vibrating sounds can be easily generated if the cylinder speed is rapid, or if the differential pressure is small.
- When tightening, do not tighten the needle or lock nut section excessively.
  (Tightening torque approx. 3 N·m)

Speed controller large bore size

SC Series

● Port size: Rc3/4 to Rc2

JIS symbol

RoHS CAD

Specifications

Item		SC-20A	SC-25A	SC-32A	SC-40A	SC-50A
Working fluid		Compressed air				
Max. working pressure MPa		1.0 (≈150 psi, 10 bar)		0.7 (≈100 psi, 7 bar)		
Min. working pressure MPa		0.05 (≈7.3 psi, 0.5 bar)		0.05 (≈7.3 psi, 0.5 bar)		
Proof pressure MPa		1.5 (≈220 psi, 15 bar)		1.05 (≈150 psi, 10.5 bar)		
Fluid temperature °C		5 (41°F) to 60 (140°F) (no freezing) *2				
Ambient temperature °C		0 (32°F) to 60 (140°F) (no freezing)				
Port size Rc		3/4	1	1 1/4	1 1/2	2
Weight kg		0.5	0.9	4.0	4.0	4.0
Cylinder bore size mm		ø100 to ø200	ø140 to ø250	ø300 to ø450	ø300 to ø450	ø450 to
Dial value (needle position)		10	10	10	10	10
Mounting orientation		The handle (nut) for flow control must be installed vertically facing upward or downward.				
Free flow	Flow rate L/min(ANR)	10300	17400	68000	68000	97000
	Eff. X-sectional area mm^2	155	260	1000	1000	1500
Controlled flow	Flow rate L/min(ANR)	8300	18700	68000	68000	91000
	Eff. X-sectional area mm^2	125	280	1000	1000	1400

*1: Flow rate is the atmospheric pressure conversion at 0.5 MPa.
*2: Freezing may occur due to adiabatic expansion depending on the air quality (dew point).

How to order

SC – **20A**

Ⓐ Port size

Code	Description
Ⓐ **Port size**	
20A	Rc3/4
25A	Rc1
32A	Rc1 1/4
40A	Rc1 1/2
50A	Rc2

Flow characteristics

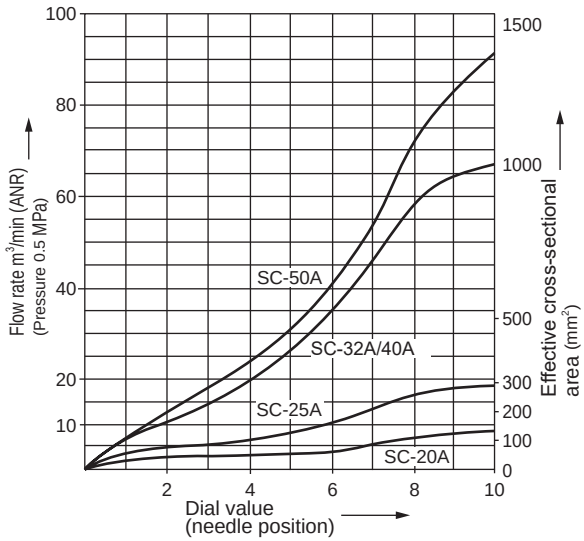

Internal structure and parts list

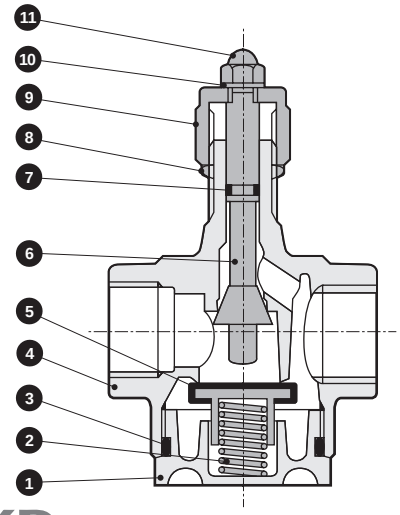

No.	Part name	Material
1	Cap	Aluminum die-casting
2	Spring	Stainless steel
3	O-ring	Nitrile rubber
4	Body	Aluminum die-casting
5	Valve seat	Copper alloy/nitrile rubber
6	Rod	Copper alloy
7	O-ring	Nitrile rubber
8	Nut	Carbon steel or copper alloy
9	Nut	Aluminum die-casting
10	Internal star washer	Stainless steel
11	Cap nut	Steel

Dimensions

● SC-20A

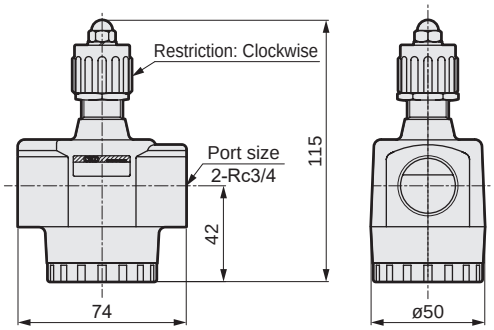

● SC-25A

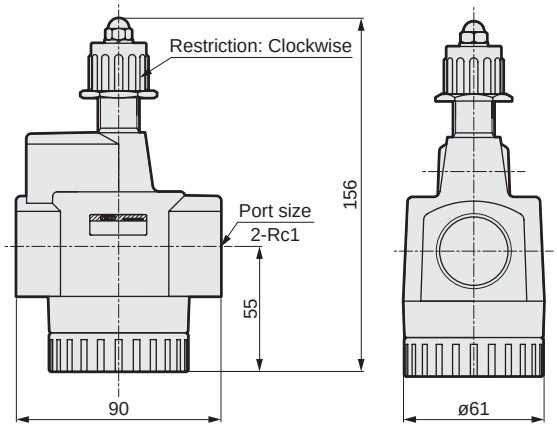

● SC- 32 / 40 A / 50

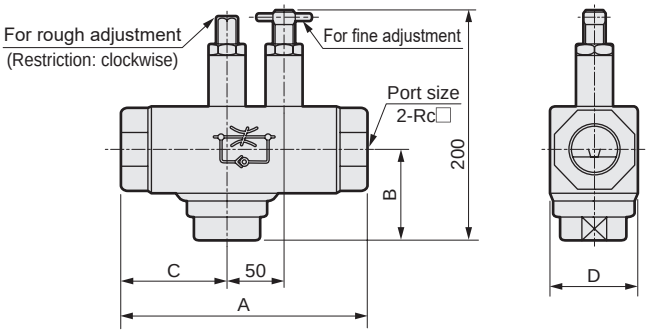

Model No.	A	B	C	D	Port size
SC-32A	210	77	92	75	Rc1 1/4
SC-40A	210	77	92	75	Rc1 1/2
SC-50A	222	79	96	84	Rc2

⚠ Safety precautions

When connecting the SC Series, do not tighten the product with a torque greater than what is listed on the right.

- When operating in the low pressure range (0.05 MPa or less), or when the piping, etc., before and after the product are excessively constricted, note that vibrating sounds can be easily generated if the cylinder speed is rapid, or if the differential pressure is small.
- When tightening, do not tighten the needle or lock nut section excessively. (Tightening torque approx. 3 N·m)

Port thread	Tightening torque N·m
Rc3/4	51
Rc1	70
Rc1 1/4	80
Rc1 1/2	85
Rc2	120

Speed controller Medium bore size Outdoor Series

SC1-W Series

●Port size: Rc1/4 to Rc1/2

JIS symbol

RoHS

Specifications

1 MPa ≈ 145.0 psi, 1 MPa = 10 bar

Item		SC1-8-W	SC1-10-W	SC1-15-W
Working fluid		Compressed air		
Max. working pressure MPa		1.0 (≈145 psi, 10 bar)		
Min. working pressure MPa		0.05 (≈8 psi, 1 bar)		
Proof pressure MPa		1.5 (≈217 psi, 15 bar)		
Fluid temperature °C		5 (41°F) to 60 (140°F)		
Ambient temperature °C		-10 (14°F) to 60 (140°F) (no freezing)		
Port size Rc		1/4	3/8	1/2
Weight g		95	205	195
Cylinder bore size mm		ø32 to ø75	ø50 to ø140	ø80 to ø160
Dial value (needle position)		10	10	10
Free flow	Flow rate L/min (ANR)	930	2600	2900
	Effective cross-sectional area mm²	14	39	43
Controlled flow	Flow rate L/min (ANR)	870	1500	2400
	Effective cross-sectional area mm²	13	22	36

*1: Flow rate is the atmospheric pressure conversion at 0.5 MPa.

How to order

SC1 - 8 - W

Ⓐ Port size

Code	Description
Ⓐ **Port size**	
8	Rc1/4
10	Rc3/8
15	Rc1/2

Flow characteristics

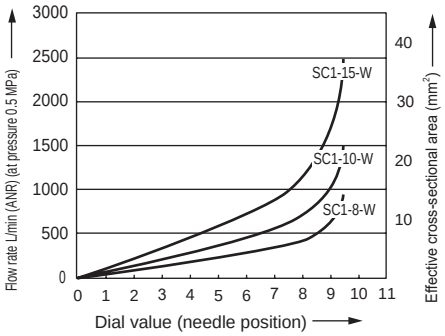

Internal structure and parts list

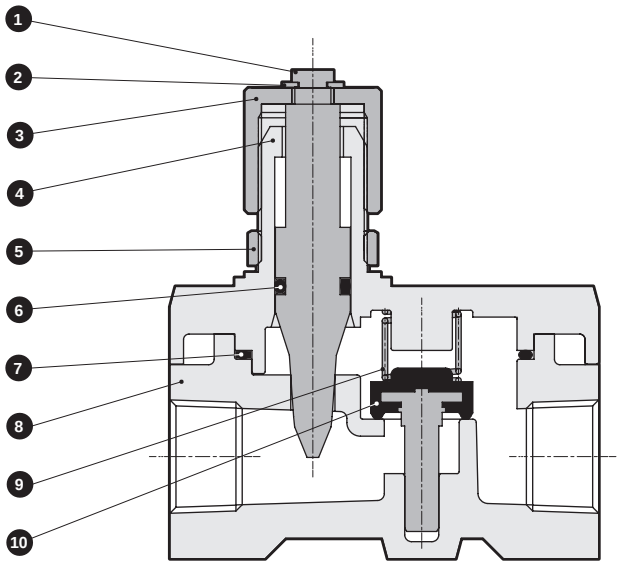

No.	Part name	Material
1	Needle	Stainless steel
2	E type snap ring	Stainless steel
3	Knob	Aluminum
4	Needle guide	Aluminum alloy die-casting
5	Lock nut	Stainless steel
6	O-ring	Fluoro rubber
7	Gasket	Fluoro rubber
8	Body	Aluminum alloy die-casting
9	Spring	Stainless steel
10	Valve seat	Copper alloy/fluoro rubber

Dimensions

●SC1-W

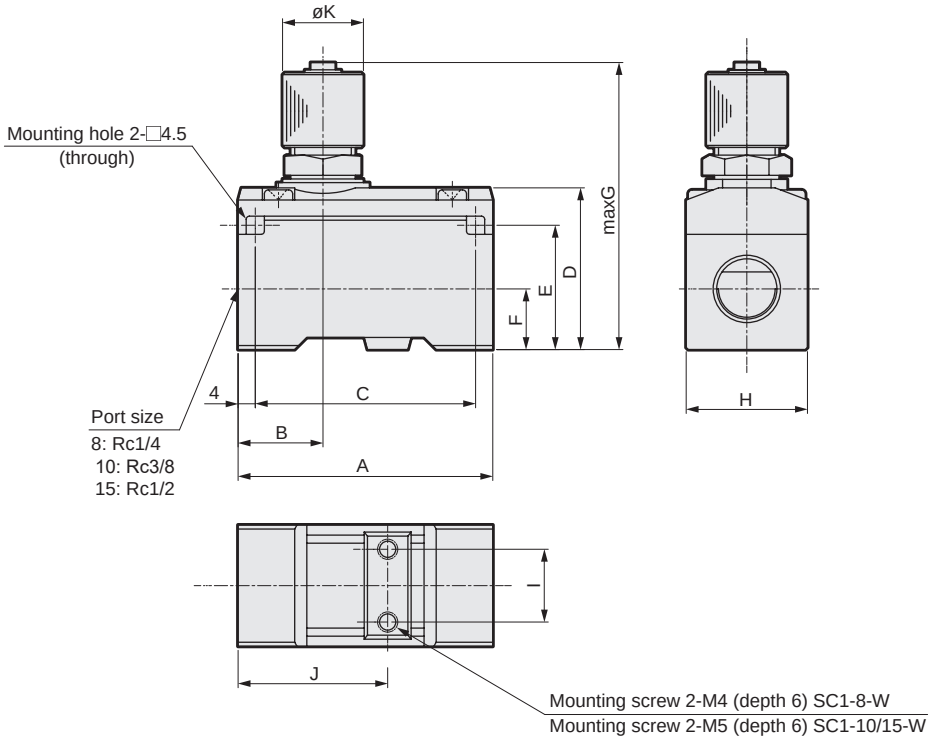

Model No.	A	B	C	D	E	F	G	H	I	J	K
SC1-8-W	50	20	42	31	23	11	67	22	12	31	19
SC1-10/15-W	63	21	55	40	31	15	83	30	18	37	23

Safety precautions

■ Design/selection

⚠ WARNING

●This product is for industrial use. Do not use for medical purposes, or in any equipment or circuit that concerns human life.

■ Working environment

●This product has outdoor specifications, but should not be used in the following environments.

- When the ambient temperature and product temperature exceed the range of -10 to 60°C. (The product temperature is at risk of exceeding the ambient temperature when exposed to direct sunlight.)
- Where air freezes.
- In atmospheres containing corrosive gases, liquids and chemicals.
- Locations with vibration or impact.

⚠ CAUTION

●When operating in the low pressure range (0.05 MPa or less), or when the piping, etc., before and after the product is excessively constricted, note that vibrating sounds can be easily generated at fast cylinder speeds or low differential pressure.

■ Working fluids

●Use only compressed air. Air containing corrosive gases, fluids, or chemicals could result in body damage or rubber deterioration.

■ Others

●This product is guaranteed for outdoor use, but not corrosion resistance (no rust or discoloration).

■ Mounting, installation and adjustment

⚠ CAUTION

●When tightening, do not tighten the needle or lock nut section excessively.
(Tightening torque approx. 3 N·m)

■ Use/maintenance

⚠ WARNING

●Do not disassemble.

⚠ CAUTION

●Do not apply a load to the product outside the parameters of use. (Do not climb/step onto the product.)

Pneumatic components (speed controller)

Safety Precautions

Be sure to read this section before use.
Refer to "Pneumatic, Vacuum and Auxiliary Components (No. CB-024SA)" for general precautions, and to "⚠Safety precautions" in this section for details on each series.

Design/selection

⚠WARNING

■ Do not constantly push down or apply a load onto the push ring for the push-in fitting.
- The tube may lose its holding capacity.
- When transporting an assembled product, avoid positions which constantly press down on the push ring.

⚠CAUTION

■ Use the product in the range of conditions specified for the product.
Consult with CKD when using the product for special applications.
- Use of the product exceeding the specifications range may result in insufficient performance, and safety cannot be guaranteed.
- This product may not be usable in special applications and environments.
For example, use for applications requiring safety, including nuclear energy, railways, aircraft, vehicles, medical devices, devices in contact with beverages or foodstuffs, amusement devices, emergency cutoff circuits, press machines, brake circuits, or safety devices or applications.

■ Confirm before use that the product will withstand the working environment.
- Cannot be used in environments where its functions will be impeded.
Such environments include high temperatures, chemical atmospheres, or where chemical liquids, vibration, moisture, water dripping or gas is present. Environments where ozone is generated.
- Do not use the product in a place where it could come in direct contact with coolant or spatter, etc.

■ Understand the characteristics of compressed air before designing a pneumatic circuit.
- The same functions as the mechanical, hydraulic, and electrical methods cannot be anticipated if instantaneous stopping and holding are required during an emergency stop.
- Pop-out, air discharge, or leakage due to air compression and expansion may occur.

■ This valve cannot be used as a stop valve that requires no leakage. Slight leakage is allowed for in this product's specifications.

■ Install a "pressure switch" and "residual pressure exhaust valve" on the device's compressed air supply side.
- The pressure switch will disable operation until the set pressure is reached. The residual pressure exhaust valve releases compressed air into the pneumatic pressure circuit to prevent accidents caused by operation of pneumatic components under residual pressure.

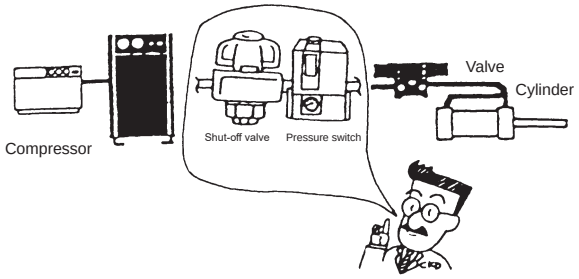

■ Confirm whether PTFE can be used.The sealant contains PTFE (polytetrafluoroethylene resin) powder. Check that this poses no problem during use.

■ Indicate the maintenance conditions in the device's instruction manual.
- The product's performance may drop too low to maintain an appropriate safety level depending on usage conditions, working environment and maintenance status. With correct maintenance, the product functions can be used to the fullest.

■ Consult with CKD if ozone is generated in the supplied air. (Ozone-proof products are available.)

■ Rubber parts deteriorate and service life is shortened if ultra dry air is used.

Mounting, installation and adjustment

Piping

⚠CAUTION

■ Do not remove the package or seal cap on the piping port until just before piping the product.
- Removing the piping port cap before piping work may cause foreign matter to enter the pneumatic components from the piping port, resulting in failure or malfunction.

■ When connecting pipes, wrap sealing tape in the opposite direction from the threading, from the inside position to within 2 mm from the pipe end.
- If sealing tape protrudes from the pipe threads, it could be cut when screwing the bolts in. This could cause the tape to enter the pneumatic components, causing failures.

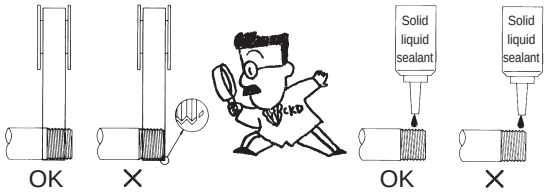

■ M3 and M5 screws are sealed with gaskets.

■ Handling push-in fittings and tubes
- For handling of push-in fittings and tubes, refer to Warnings and Cautions of fittings/tubes (Pneumatic, Vacuum and Auxiliary Components (No. CB-024SA)).

■ Always flush just before piping pneumatic components.
- Any foreign matter that has entered during piping must be removed so it does not enter the pneumatic components.

■ When supplying compressed air after connecting pipes, do not suddenly apply high pressure.
- The pipe connection could dislocate, causing the pipe tube to fly out, leading to accidents.

■ After connecting piping, always check all pipe connections for air leaks before supplying compressed air.
- Apply a leakage detection agent to pipe connections with a brush and check for air leaks.

■ Apply recommended tightening torque when connecting pipes.
- The purpose is to prevent air leakage and damage to bolts.
- First tighten the bolts by hand to ensure that the threads are not damaged, then use a tool.
- Do not tighten while pressure is applied.

[Recommended tightening torque]

Port thread	Tightening torque N·m
M3	0.3 to 0.6
M5	1.0 to 1.5
Rc1/8	3 to 5
Rc1/4	6 to 8
Rc3/8	13 to 15
Rc1/2	16 to 18
Rc3/4	19 to 40
Rc1	41 to 70

■ Connect piping so that connections are not dislocated by equipment movement, vibration, tension, etc.
- Control of actuator speed will be disabled if piping on the exhaust side of the pneumatic circuit is disengaged.
- When using the chuck holding mechanism, the chuck may be released, creating a hazardous state.

■ Around the pneumatic components, keep space for installation, removal and piping work.

■ Install a pneumatic filter just before the pneumatic component in the circuit.

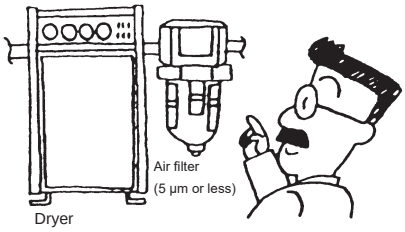

■ Check that lock nuts are not loose.
- Actuator speed cannot be controlled if the lock nut is loose.

■ Check the needle valve speed of rotation.
- The needle valve has dislocation prevention that could break if the needle is turned too far. Check the number of turns for the product used.

■ Confirm the flow direction.● If installed in reverse, speed adjustment will not function and the actuator could pop out, creating a hazard.

■ Fully close the needle, and open to adjust speed.
- If the needle is opened, the actuator could suddenly and dangerously pop out. Ensure that it is closed and then open it.
- The needle closes when turned to the right and opens when turned to the left.

■ Avoid using the product for applications that involve continuous rotation or oscillations.
● Fittings could be damaged.

■ Avoid use in areas with large vibration or impact.

Use/maintenance

⚠ WARNING

■ Stop air flow and confirm that there is no residual pressure before replacing the tube.

Cylinder switch guide

CONTENTS

Cylinder switch variation table	Ending 2
Cylinder with switch variation table	Ending 4
⚠ Safety precautions	Intro 71
Proximity cylinder switch with 2-color LED	Ending 8
Strong magnetic field proof cylinder switch	Ending 9
● M Series	Ending 12
● R Series	Ending 14
● T Series	Ending 16
● K Series	Ending 20
● F Series	Ending 22
● H Series	Ending 24
● V Series	Ending 25
● E Series	Ending 26
● Contact protecting circuit box	Ending 27
● Cylinder switch with connector	Ending 28
Series option	Ending 30
Operational principle, switch installation position	Ending 31
Operating range and hysteresis of each cylinder with switch	Ending 32
Relocation of switch	Ending 42
How to install the product to terminal box	Ending 44
Selection chart	Ending 45
Troubleshooting	Ending 46

The cylinder switches T2YH, T2YV, T3YH, and T3YV are scheduled for end of production at the end of December 2023.

Discrete switch model No.

Model No. of discrete switch unit is as below.

SW - Switch model No.

Axial lead wire (H) direction and L-shaped lead wire (V) direction are available.

Cylinder switch variation

CKD cylinders with switches cover wide applications with miniature to large cylinders and rotary actuators. Refer to the variation table below to select the ideal product.

Proximity switch																																	Descriptions
M Series				R Series					T Series												K Series					F Series							
M2	M2WV	M3	M3WV	R1	R2	R2Y	R3	R3Y	T1	T2	T2J	T2Y	T2W	T2YL	T3	T3P	T3Y	T3W	T3YL	T2YD	K2	K2Y	K3	K3P	K3Y	F2	F2Y	F2S	F3	F3Y	F3P	F3S	
●	●	●	●	●	●	●	●	●	●	●	●	●	●	●	●	●	●	●	●	●	●	●	●	●	●	●	●	●	●	●	●	●	Grommet
				●	●	●	●	●																									Terminal box
●	●			●	●	●			●	●	●	●	●	●						●	●	●				●	●	●					2-wire
		●	●				●	●							●	●	●	●	●				●	●	●				●	●	●	●	3-wire
●	●*1	●	●*1	●	●	●*1	●	●*1	●	●	●	●*1	●*1	●*1	●	●*2	●*1	●*1	●*1	●*1	●	●*1	●	●*2	●*1	●*2	●*1	●	●*2	●*1	●*1	●	LED (Lit when ON)
																																	Neon light (Lit when OFF)
																																	No indicator lamp
	●		●			●		●				●	●	●			●	●	●	●		●			●		●			●			2-color LED
		●					●	●																									5 VDC
●	●				●	●				●	●	●	●	●						●	●	●				●	●	●					10 VDC to 30 VDC
		●	●				●	●							●	●	●	●	●				●	●	●				●	●	●	●	30 VDC or less
				●					●																								100 VAC
				●					●																								200 VAC
●	●	●	●	●	●	●	●	●	●	●	●	●	●	●	●	●	●	●	●	●	●	●	●	●	●	●	●	●	●	●	●	●	Programmable controller
		●	●	●			●	●									●	●	●				●	●	●				●	●	●	●	IC circuit
		●	●	●			●	●	●								●	●	●				●	●	●				●	●	●	●	Compact relay, valve
																																	Large relay, valve

*1: LEDs are red/green.
*2: LEDs are yellow.
*3: LEDs are green.
*4: LEDs other than those in *1 to *3 are red.

Descriptions		Reed switch																
		M Series		R Series				T Series			K Series		F Series	H Series		E Series		V Series
		M0	M5	R0	R4	R5	R6	T0	T5	T8	K0	K5	F0	H0	H0Y	E0	ET0	V0
Connection	Grommet	●	●	●	●	●	●	●	●	●	●	●	●	●	●		●	●
	Terminal box			●	●	●	●									●		
Number of connections	2-wire	●	●	●	●	●	●	●	●	●	●	●	●	●	●	●	●	●
	3-wire																	
With indicator lamp	LED (Lit when ON)	●		●			●	●		●	●		● *2	● *3	● *1	●	● *2	●
	Neon light (Lit when OFF)				●													
	No indicator lamp		●			●			●			●						
	2-color LED														●			
Working voltage	5 VDC		●			●			●			●						
	10 VDC to 30 VDC														●			●
	30 VDC or less	●	●	●		●	●	●	●	●	●	●	●	●		●	●	
	100 VAC	●	●	●	●	●		●	●	●	●	●		●		●	●	●
	200 VAC			●	●	●				●						●		
Applications	Programmable controller	●	●	●		●	●	●	●	●	●	●	●	●	●	●	●	●
	IC circuit		●			●			●			●						
	Compact relay, valve	●	●	●		●		●	●	●	●	●		●		●	●	●
	Large relay, valve				●													

Cylinder with switch variations

CKD cylinders with switches cover wide applications with miniature to large cylinders and rotary actuators. Refer to the variation table below to select the ideal product.

Proximity switch																																		
F Series							M Series					R Series					T Series												K Series					
F2	F2Y	F2S	F3	F3Y	F3P	F3S	M2	M2WV	M3	M3P	M3WV	R1	R2	R2Y	R3	R3Y	T1	T2	T2J	T2W	T2Y	T2YL	T3	T3P	T3W	T3Y	T3YL	T2YD	K2	K2Y	K3	K3P	K3Y
																		●		●			●	●	●								
																	●	●	●	●	●	▲	●	●	●	●	▲						
																	●	●	●	●	●		●	●	●	●	▲						
																	●	●	●	●	●		●	●	●	●	▲	●					
																	●	●	●	●	●	▲	●	●	●	●	▲	●					
																	●	●	●	●	●	▲	●	●	●	●	▲	●					
																	●	●	●	●	●		●	●	●	●		●					
																	●	●	●	●	●		●	●	●	●		●					
																	●	●	●	●	●		●	●	●	●							
																	●	●	●	●	●		●	●	●	●							
● *7	● *7	● *7	● *7	● *7	● *7	● *7											● *3	●	●	●	●	▲	●	●	●	●	▲	●					
● *7	● *7	● *7	● *7	● *7	● *7	● *7											● *3	●	●	●	●		●	●	●	●		●					
																	● *6	●	● *6	●	● *6	▲	●	●	●	● *6	▲	● *3					
●	●	●	●	●	●	●																												
●	●	●	●	●	●	●																												
																													●	●	●	●	●
●	●	●	●	●	●	●																												
●	●	●	●	●	●	●																												
							● *8	●	● *8	● *8	●																							
																	●	●	●	●	●		●	●	●	●								
							● *8	●	● *8	● *8	●																							
																	●	●	●	●	●		●	●	●	●								
																	●	●	●	●	●		●	●	●	●								
																	●	●	●	●	●		●	●	●	●								
																	●	●	●	●	●		●	●	●	●		●						
																	●	●	●	●	●		●	●	●	●		●						
																	●	●	●	●	●		●	●	●	●		●						
																	●	●	●	●	●		●	●	●	●		●						
							● *8	●	● *8	● *8	●																							
																	●	●	●	●	●		●	●	●	●		●						

*1: Including made-to-order products
*2: ▲ is mountable depending on variation. H type (L2), Coolant proof (G2/G3), etc.
*3: Excluding ø16 or less
*4: Excluding ø12, ø16, position locking all bore sizes
*5: Excluding ø40 or less
*6: ø12 and ø16 of standard, X, Y, O, F, B, W and M are L1

Cylinder model		Bore size	Mounting method			Compatibility with body	Reed switch															
							M Series		R Series				T Series			K Series		F Series	H Series		E Series	
			Band	Tie rod	Rail		M0	M5	R0	R4	R5	R6	T0	T5	T8	K0	K5	F0	H0	H0Y	E0	ET0
Pencil shaped cylinder	SCP*3	ø6 to ø16	●										●	●								
Medium bore size cylinder	CMK2	ø20 to ø40	●			Magnet provided as standard							●	●	●							
Medium bore size cylinder	CMA2	ø20 to ø40	●			Magnet provided as standard							●	●	●							
Round shaped cylinder	SCM	ø20 to ø100	●		●	Magnet provided as standard							●	●	● *5							
Global cylinder Tie rod cylinder	SCG	ø40 to ø100		●		Magnet provided as standard							●	●	●							
Medium bore size cylinder	SCA2	ø40 to ø100		●		Magnet provided as standard							●	●	●				▲	▲	▲	
Large bore size cylinder with valve	SCA2-V	ø40 to ø100		●		Magnet provided as standard							●	●								
Large bore size cylinder	SCS2	ø125 to ø250		●									●	●	●							
Small cylinder with valve	CKV2	ø20 to ø40	●			Magnet provided as standard							●	●	●							
Cylinder with valve	CAV2 COV2	ø50 to ø100		●		Magnet provided as standard							●	●	●							
Compact cylinder	SSD2	ø12 to ø200			●								●	●	● *9							▲
Guided super compact cylinder	SSG	ø12 to ø100			●								●	●	● *10							
Compact cylinder	SSD	ø12 to ø160			●								●	●	● *9							▲
Small direct mounting cylinder	MDC2	ø4 to ø10			●													●				
Small cylinder with suction pad	MVC	ø6, ø10			●	Magnet provided as standard												●				
Compact cylinder	SMG	ø6 to ø32			●											●	●					
Small compact cylinder	MSD	ø6 to ø16			●													●				
Small guided compact cylinder	MSDG	ø6 to ø16			●													●				
Flat compact cylinder	FC*	ø25 to ø63			●		● *8	● *8														
Stopper cylinder	STK	ø20 to ø50			●	Magnet provided as standard							●	●	●							
Brake cylinder	ULKP	ø16	●				● *8	● *8														
Brake cylinder	ULK	ø20 to ø40	●			Magnet provided as standard							●	●	●							
Brake cylinder	JSK2	ø20 to ø40	●			Magnet provided as standard							●	●	●							
Brake cylinder	JSM2	ø20 to ø40	●			Magnet provided as standard							●	●	●							
Tie rod cylinder with brake	JSG	ø40 to ø100		●		Magnet provided as standard							●	●	●							
Brake cylinder medium bore size	JSC3	ø40 to ø100		●		Magnet provided as standard							●	●	●				▲	▲		
Brake cylinder large bore size	JSC4	ø125 to ø180		●									●	●	●							
Position locking compact cylinder	USSD	ø40 to ø63			●								●	●	●							
Free position locking flat cylinder	UFCD	ø25 to ø63			●		● *8	● *8														
Free position locking Medium bore size cylinder	USC	ø40 to ø100		●		Magnet provided as standard							●	●	●				▲	▲		

*7: Mountable for ø20 and ø25 of SSD2. Mountable for ø25 of SSG
*8: Only V type (L-shaped lead wire) mountable
*9: Excluding ø12 to ø32 of L, XL, YL, OL, LF, BL, WL, ML, ø12 and ø16 of KL, DL, and ø16 of QL
*10: Excluding ø32 or less

Cylinder switch

Proximity switch																																
F Series							M Series					R Series					T Series											K Series				
F2	F2Y	F2S	F3	F3Y	F3P	F3S	M2	M2WV	M3	M3P	M3WV	R1	R2	R2Y	R3	R3Y	T1	T2	T2J	T2Y	T2W	T2YL	T3	T3P	T3Y	T3W	T3YL	T2YD	K2	K2Y	K3	K3P	K3Y
● *10	● *10	● *10	● *10	● *10		● *10												● *11			● *11		● *11			● *11							
● *10	● *10	● *10	● *10	● *10	● *10	● *10												● *11			● *11		● *11	● *11		● *11							
● *10	● *10	● *10	● *10	● *10	● *10	● *10												● *11			● *11		● *11	● *11		● *11							
																		●			●		●	●		●							
●	●	●	●	●	●	●																										
●	●	●	●	●	●	●																										
																	●	●	●	●		▲	●	●	●		▲	●					
																	●	●	●	●		▲	●	●	●		▲	●					
																													●	●	●	●	●
																		●					●										
																	●	●	●	●	●		●	●	●	●		●					
												●	●	●	●	●																	
							●	●	●	●	●									●	●				●	●		●					
							●	●	●	●	●									●	●				●	●		●					
																				●	●				●	●		●					
							●	●	●	●	●									●	●				●	●		●					
																	●	●	●	●	●		●	●	●	●							
																	●	●	●	●	●		●	●	●	●							
																	●	●	●	●	●		●	●	●	●		●					
																	●	●	●	●	●		●	●	●	●		●					
																	●	●	●	●	●		●	●	●	●		●					
																	●	●	●	●	●		●	●	●	●		●					
● *7	● *7	● *7	● *7	● *7	● *7	● *7											● *3	●	● *3	● *3	●		●	●	● *3	●		● *2					
																		●	● *3	● *3	●		●	●	● *3	●		● *3					
												●	●		●																		
												●	●	●	●	●																	
																	●	●	●	●	●		●	●	●	●							
												●	●		●																		
																	●	●	●	●	●		●	●	●	●							
																	●	●	●	●	●		●	●	●	●							
							● *8		● *8	● *8																							

*1: Including made-to-order products
*2: ▲ is mountable depending on variation. H type (L2), Coolant proof (G2/G3), etc.
*3: Excluding ø16 or less
*4: Excluding ø12, ø16, position locking all bore sizes
*5: Excluding ø40 or less
*6: ø12 and ø16 of standard, X, Y, O, F, B, W and M are L1

Cylinder model		Bore size	Mounting method			Compatibility with body	Reed switch														
							M Series		R Series				T Series			K Series		F Series	H Series		E Series	
			Band	Tie rod	Rail		M0	M5	R0	R4	R5	R6	T0	T5	T8	K0	K5	F0	H0	H0Y	E0	ET0
Linear slide cylinder	LCW	ø12 to ø20			●	Magnet provided as standard							● *11	● *11								
Linear slide cylinder	LCR	ø6 to ø25			●	Magnet provided as standard							● *11	● *11								
Linear slide cylinder	LCG	ø6 to ø25			●	Magnet provided as standard							● *11	● *11								
Thin linear slide cylinder	LCX	ø25,ø32			●	Magnet provided as standard							●	●								
Linear slide cylinder	LCM	ø4.5 to ø8			●																	
Guided cylinder	STM	ø6 to ø10			●	Magnet provided as standard																
Global cylinder Guided cylinder	STG	ø12 to ø80			●	Magnet provided as standard							●	●	● *4							
Guided cylinder	STS/L	ø8 to ø100			●	Magnet provided as standard							●	●	● *3							
Twin rod cylinder	STR2	ø6 to ø32			●	Magnet provided as standard										●	●					
Unit cylinder	UCA2	ø10 to ø32			●								●	●								
High energy absorption cylinder	HCM	ø20 to ø63			●	Magnet provided as standard							●	●	●							
High speed cylinder	HCA	ø20 to ø100	●			Magnet provided as standard			●	●	●	●										
Rodless cylinder	SRL3	ø10 to ø100			●	Magnet provided as standard	●	●														
High precision guided rodless cylinder	SRG3	ø12 to ø25			●		●	●														
High precision guided rodless cylinder	SRM3	ø25 to ø40, 63			●								●	●	●							
Rodless cylinder with brake	SRT3	ø32 to ø63			●	Magnet provided as standard	●	●														
Magnet rodless cylinder	MRL2	ø6 to ø20			●																	
Magnet rodless cylinder with high precision guide	MRG2	ø10 to ø25			●	Magnet provided as standard							●	●								
Clamp cylinder	CAC4	ø40 to ø80		●		Magnet provided as standard							●	●	●				▲	▲		
Position locking clamp cylinder	UCAC2	ø50, ø63		●		Magnet provided as standard							●	●	●				▲	▲		
Lightweight clamp cylinder	CAC-N	ø32,ø40		●		Magnet provided as standard							●	●	●							
Position locking clamp cylinder	UCAC-N	ø50,ø63		●		Magnet provided as standard							●	●	●							
Rotary clamp cylinder	RCS2	ø12 to ø63			●	Magnet provided as standard							●	●	● *12							
Rotary clamp cylinder	RCC2	ø16 to ø63			●	Magnet provided as standard							●	●								
Robot cylinder	MFC	ø30 to ø80		●					●	●	●	●										
High power cylinder	SHC	ø40 to ø100		●		Magnet provided as standard			●	●	●	●							▲			
Mechanical power cylinder	MCP	For actual thrust 2 t, 5 t		●	●	Magnet provided as standard							●	●	●							
Guideless cylinder	GLC	ø40 to ø100		●		Magnet provided as standard			●	●	●	●							▲			
Rotary actuator	RRC	Size: 8, 32, 63			●	Magnet provided as standard							●	●	●							
Table rotary actuator	GRC	Size: 5 to 80			●	Magnet provided as standard																
Rotary actuator	RV3*	Size: 50 to 300					● *8	● *8														
Hand-chuck		Hand : Cylinders II P786-P789 Chuck: Cylinders II P956-P957				Reference																

*7: Mountable for ø20 and ø25.
*8: Only V type (L-shaped lead wire) mountable
*9: Excluding ø12 to ø32 of L, XL, YL, OL, LF, BL, WL, ML, ø12 and ø16 of KL, DL, and ø16 of QL
*10: Excluding ø16 and over
*11: Excluding ø12 or less
*12: Excluding ø12 and ø16

2-color LED proximity cylinder switch

Overview

Conventionally, the pneumatic cylinder position detection switch required installation and adjustment because of the operating range and hysteresis. With the 2-color LED proximity cylinder switch, the optimum installation position is instantly indicated by the green LED lighting at the optimum installation position, and the red LED lighting at the normal operating range. This eliminates the time and hassle required to adjust the switch and prevents setting errors, allowing high-reliability equipment to be configured.

● Light display

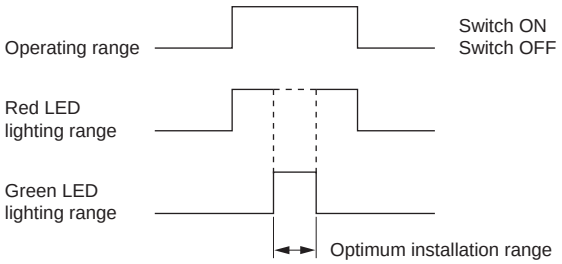

Features

● Easy installation and adjustment

Since the green LED lights at the optimal installation position, the switch can be installed and adjusted very easily.

● High reliability

The switch uses our original hybrid IC integrated magnetic resistance element, making it even more reliable.

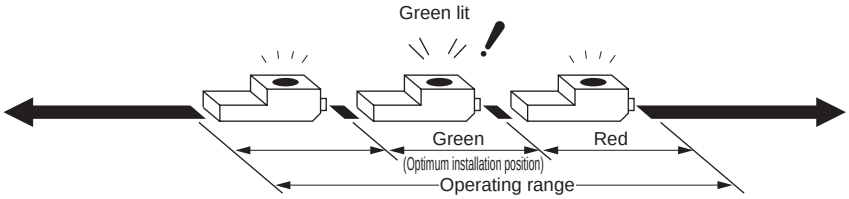

● Comparison of cylinder and switch setting

[Conventional] → [2-color LED switch]

(1) The switch is moved in one direction and the lighting start position is marked.

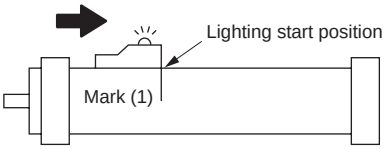

(1) The switch is moved in only one direction, and is fixed at the position where the green LED lights.

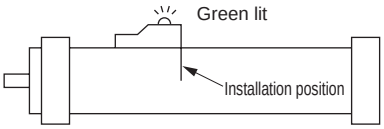

(2) In the same manner, the switch is moved from the other direction, and the lighting start position is marked.

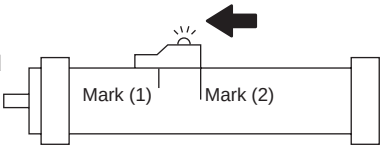

(3) The end of the switch is set and fixed at the center of the two marks.

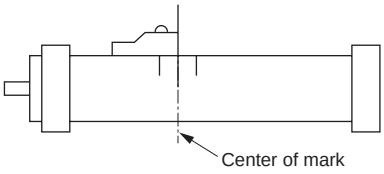

2-color LED switch is
(1) Quick to install
(2) Easy to install
(3) Free of setting errors

Strong magnetic field proof cylinder switch

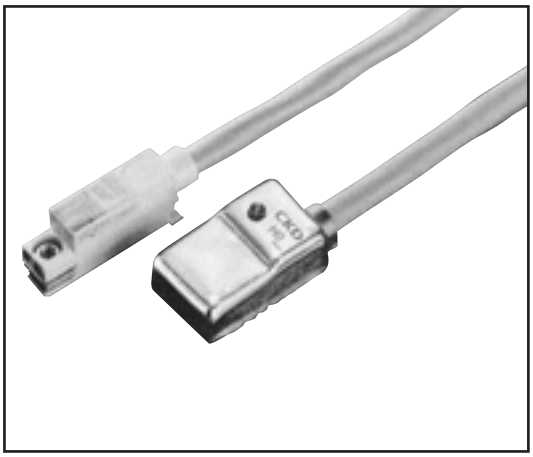

Overview

This cylinder switch is used in environments having strong magnetic fields, such as near spot welding machines and magnetizing units in automotive plants, etc.

Features

● Easy installation/position adjustment (V0, T2YD)
Uses the rail mounting method. Mountable with a single set screw, and with easy position adjustment.

● Heat resistant material
Metal (H0, H0Y) and self-extinguishing resin UL94-V0 (V0, T2YD) body, and flame-resistant lead wires (optional for T2YD) have been adopted. Prevents body and lead wire burning or welding due to spatter.

● No polarity (H0, T2YD, H0Y)
Integrated diode bridge eliminates polarity. Eliminates the time required for checking positive and negative polarity, preventing connection errors.

● 2-color LED for easy installation adjustment (T2YD, H0Y)
Since the green LED lights at the optimal installation position, the switch can be installed and adjusted very easily.

⚠CAUTION

(1) Spot welding current - malfunction distance characteristics
(For detection stroke 30 mm and over for V0 switch)

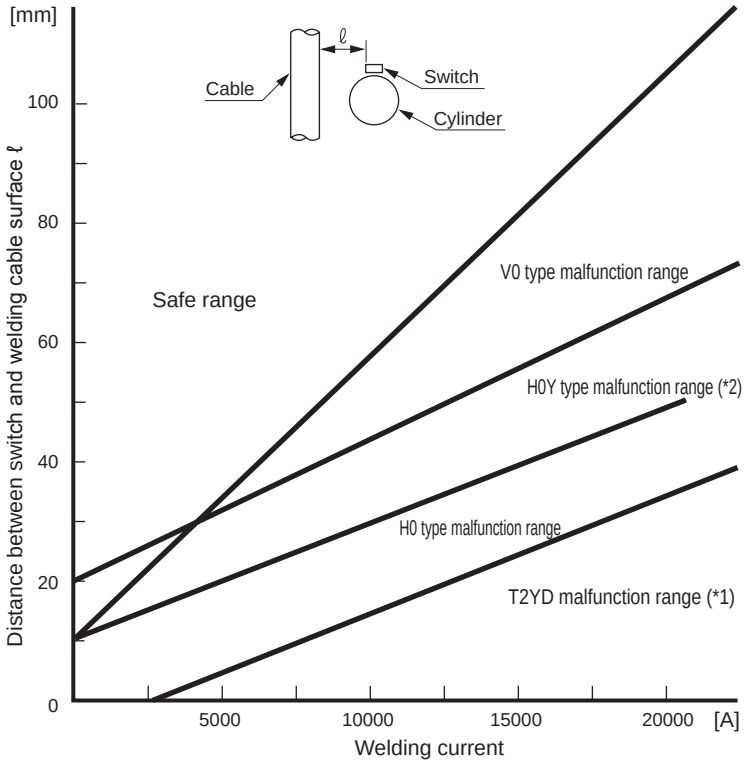

The above external magnetic field resistance properties apply when H0 is installed within the “max. sensitivity position ±1 mm,” within the “max. sensitivity position ±1.5 mm” for V0, and within the “optimum installation range” for H0Y. Install switches within this range. Do not apply welding current to flow during movement of the cylinder piston.
If 2 or more welding cables are energized simultaneously, the magnetic flux will increase due to the synergistic effect of the cables. Contact CKD before use. Note that the switch cannot be set within the cable loop.

*1: Indicates malfunction occurring when the cylinder piston magnet is degaussed by a welding field.
*2: Malfunction of H0Y indicates output malfunction.
*3: T2YD is a switch dedicated for AC magnetic field.

(2) SSD detection stroke - malfunction distance characteristics
(V0 switch)

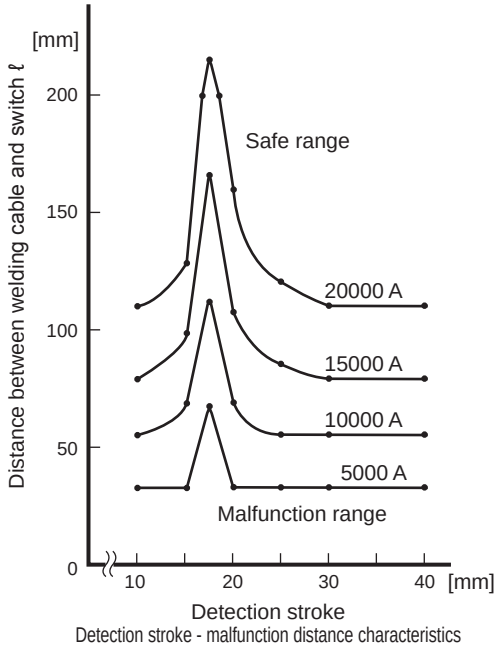

Detection stroke - malfunction distance characteristics

When using with the detection stroke set to 30 mm or less, provide the distance in the figure above between the welding cable and switch.

(3) H type cylinder switch
Magnetic performance near spot welding

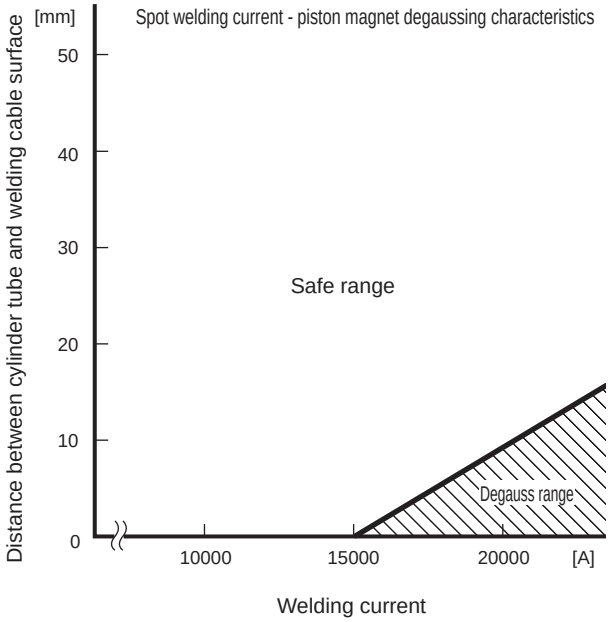

Degaussing occurs when an alternating current magnetic field is applied to the magnet. Measures have been taken for the cylinder with H type switch magnet. While degaussing does not occur up to 15,000 A, at over 15,000 A, provide the above distance between the cylinder tube and welding cable surfaces.

MEMO

M Series	Application Cylinder	FC* RV3 * SRL3 SRG3 SRT3 UFCD

M*V

M*H

Specifications

Item	2-wire proximity		3-wire proximity		
	M2V/M2H	M2WV(2-color LED)	M3H/V (NPN output))	M3PH/V (PNP output)	M3WV (2-color LED)
Applications	Dedicated for programmable controller		For programmable controller, relay, IC circuit, compact solenoid valve		
Output method	-		NPN output	PNP output	NPN output
Power supply voltage	-		4.5 to 28 VDC		10 to 28 VDC
Load voltage	10 to 30 VDC		30 VDC or less		
Load current	5 to 30mA		100 mA or less		
Current consumption	-		10 mA or less with 24 VDC	10 mA or less with 24 VDC	15 mA or less with 24 VDC
Internal voltage drop	4 V or less		0.5 V or less		
Indicator	Red LED (Lit when ON)	Red/green LED (Lit when ON)	Red LED(Lit when ON)	Yellow LED (Lit when ON)	Red/green LED (Lit when ON)
Leakage current	1 mA or less		10 μA or less	0.05 mA or less	10 μA or less
Lead wire length	1m (Oil resistant vinyl cabtyre cable 2-conductor 0.2mm^2)		1m (Oil resistant vinyl cabtyre cable 3-conductor 0.15mm^2)		
Shock resistance	980m/s^2				
Insulation resistance	100 MΩ and over with 500 VDC megger				
Withstand voltage	No failure after 1 minute of 1,000 VAC application.				
Ambient temperature	-10 to +60°C				
Degree of protection	IEC standards IP67, JIS C0920 (water tight)				
Weight	1 m: 22 g 3 m: 57 g 5 m: 93 g		1 m: 22 g 3 m: 57 g 5 m: 93 g		

Item	2-wire reed			
	M0V/M0H		M5V/M5H	
Applications	For programmable controller, relay		For programmable controller, relay, IC circuit (no indicator lamp), serial connection	
Power supply voltage	-			
Load voltage	12/24 VDC	110 VAC	5/12/24 VDC	110 VAC
Load current	5 to 50mA	7 to 20mA	50 mA or less	20 mA or less
Current consumption	-			
Internal voltage drop	3 V or less (with 30 mA load current for DC)		0.1V or less (*4)	
Indicator	Red LED (Lit when ON)		No indicator lamp	
Leakage current	0 mA			
Lead wire length	1 m (oil resistant vinyl cabtyre cable 2-conductor 0.2mm^2)			
Shock resistance	294 m/s^2			
Insulation resistance	100 MΩ and over with 500 VDC megger			
Withstand voltage	No failure after 1 minute of 1,000 VAC application.			
Ambient temperature	-10 to +60°C			
Degree of protection	IEC standards IP67, JIS C0920 (water tight)			
Contact protection circuit*5	None			
Weight	1 m: 22 g 3 m: 57 g 5 m: 93 g			

*1: M*H is available for SRL3, SRG3, and SRT3.
*2: Refer to the pages of each cylinder model for switch model No. capable of installing on a cylinder.
*3: Contact CKD separately for cylinder switch with connector.
*4: Internal resistance 0.5 Ω or less.
***5: Refer to Intro Page 80 for contact protective measures.**

Dimensions

● M*V Series (L-shaped lead wire)

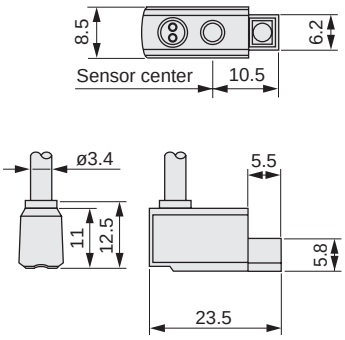

● M*W Series (2-color LED, L-shaped lead

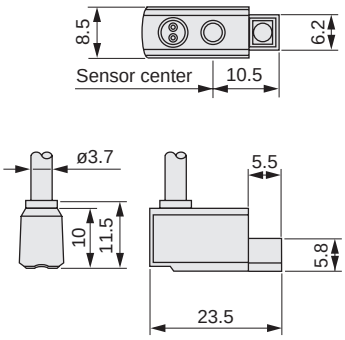

● M*H Series (straight lead wire)

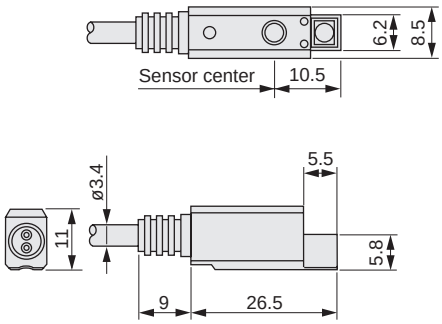

Switch internal circuit diagram

● M2V/M2H/M2WV

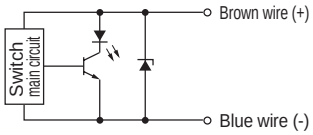

● M3V/M3H/M3WV

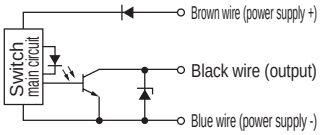

● M3PV/M3PH

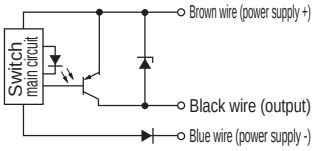

● M0V/M0H

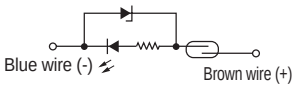

● M5V/M5H

R Series	Application cylinder	GLC HCA MFC SHC

CE
(R1,Excluding R4)

R*/R*Y

R*B

Specifications

Item	2-wire proximity			3-wire proximity	
	R1/R1K	R2/R2K	R2Y/ R2YK (2-color LED)	R3/R3K	R 3Y/R3YK (2-color LED)
Applications	Programmable controller, relay, compact solenoid valve	Dedicated for programmable controller		Programmable controller, relay, IC circuit, solenoid valve	
Output method	-			NPN output	
Power supply voltage	-	-		4.5 to 28 VDC	
Load voltage	85 to 265 VAC	10 to 30 VDC		30 VDC or less	30 VDC or less
Load current	5 to 100mA	5 to 30mA		200 mA or less	100 mA or less
Current consumption	-	-		With 24 VDC (when ON)	
				10 mA or less	16 mA or less
Internal voltage drop	10% or less of load voltage	4 V or less		0.5 V or less with 150 mA	0.5 V or less
Indicator	Red LED (Lit when ON)		Red/green LED (Lit when ON)	Red LED (Lit when ON)	Red/green LED (Lit when ON)
Leakage current	1 mA or less with 100 VAC, 2 mA or less with 200 VAC	1 mA or less		10 μA or less	
Lead wire length	1 m (oil resistant vinyl cabtyre cable 2-conductor 0.3mm^2)			1 m (oil resistant vinyl cabtyre cable 3-conductor 0.2mm^2)	
Shock resistance	980 m/s^2				
Insulation resistance	20 MΩ and over with 500 VDC megger				
Withstand voltage	1500 VAC, per minute No failure after application	No failure after 1 minute of 1,000 VAC application.			
Ambient temperature	-10 to +60°C				
Degree of protection	Grommet: IEC standards IP67, JIS C0920 (water-tight)				
Option	With terminal box R*B (no waterproof)				
Weight	1 m: 42 g 3 m: 100 g 5 m: 158 g		1 m: 56 g 3 m: 114 g 5 m: 172 g	1 m: 42 g 3 m: 100 g 5 m: 158 g	1 m: 56 g 3 m: 114 g 5 m: 172 g

Item	2-wire reed								
	R 0			R 4		R 5			R 6
Applications	Relay, programmable For controllers			For high capacity relay, solenoid valve		For programmable controller, relay, IC circuit (no indicator lamp), serial connection			Dedicated for programmable controller (with DC self-hold)
Power supply voltage	-			-		-			-
Load voltage	12/24 VDC	110 VAC	220 VAC	110 VAC	220 VAC	5/12/24 VDC	110 VAC	220 VAC	24 VDC ±10%
Load current	5 to 50mA	7 to 20mA	7 to 10mA	20 to 200mA	10 to 200mA	50 mA or less	20 mA or less	10 mA or less	5 to 50mA
Current consumption	-			-		-			-
Internal voltage drop	3.0 V or less			2 V or less		0.5V or less (*1)			5 V or less
Indicator	Red LED(Lit when ON)			Neon light OFF (Lit when OFF)		No			Red LED (Lit when ON)
Leakage current	0 mA			1 mA or less		0 mA			0.1 mA or less
Lead wire length	1 m (oil resistant vinyl cabtyre cable 2-conductor 0.3mm^2)								
Shock resistance	294 m/s^2								
Insulation resistance	20 MΩ and over with 500 VDC megger								
Withstand voltage	No failure after 1 minute of 1,500 VAC application.								
Ambient temperature	-10 to +60°C								
Degree of protection	Grommet: IEC standards IP67, JIS C0920 (water-tight)								
Contact protection circuit*2	Yes								None
Option	With terminal box R*B (no waterproof)								
Weight	1 m: 42 g 3 m: 100 g 5 m: 158 g								

*1: Internal resistance 10 Ω or less.
*2: Refer to Intro Page 80 for contact protective measures.

Dimensions

● R Series (grommet)

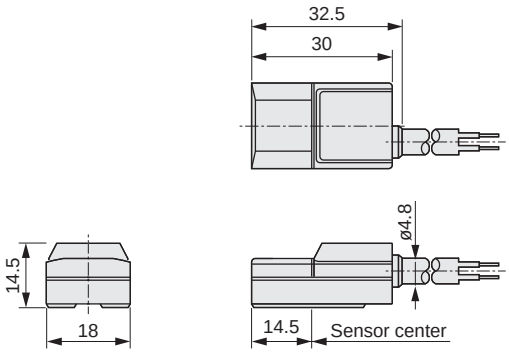

● R Series (terminal box R*B)

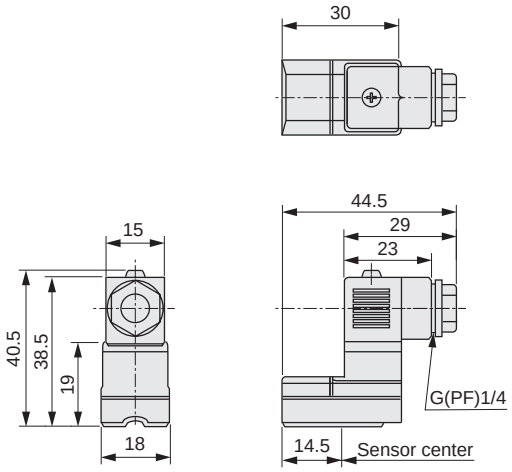

Switch internal circuit diagram

● R1

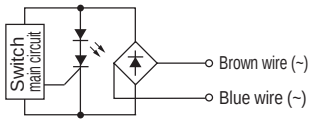

● R2/R2Y

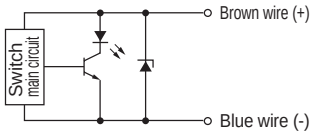

● R3/R3Y

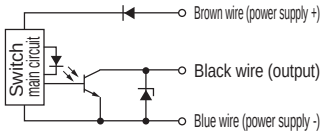

● R0

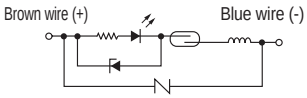

● R4

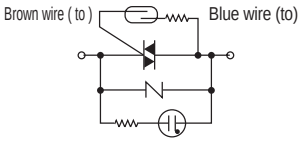

● R5

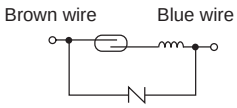

● R6

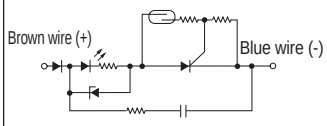

T Series	Application cylinder	CAC4	CKV2	CMA2	CMK2	HCM	JSC3	JSC4	JSG	JSK2	JSM2	LCG	LCR	LCW
		LCX	MRG2	MRL2	RCS2	RCC2	RRC	SCA2	SCG	SCM	SCP*3	SCS2	SRM3	SSD
		SSD2	SSG	STG	STS/STL	STK	UCA2	UCAC2	ULK	Hand	Chuck			

CE (T1,excluding T8)

T*H/T*WH

T*V/T*WV

T1H

T1V

T8H/T*YH
T2JH

T8V/T*YV
T2JV

Specifications

Item	2-wire proximity						3-wire proximity			
	T1H/T1V	T2H/T2V	T2HR3/T2VR3 (Bending resistant lead wire)	T2JH/T2JV (Off-delay)	T2YH/T2YV (2-color LED)	T2WH/T2WV (2-color LED)	T3H/T3V	T3PH/T3PV (PNP output)	T3YH/T3YV (2-color LED)	T3WH/T3WV(2-color LED)
Applications	For programmable controller, relay, compact solenoid valve	Dedicated for programmable controller					For programmable controller, relay			
Output method	-						NPN output	PNP output	NPN output	NPN output
Power supply voltage	-						10 to 28 VDC			
Load voltage	85 to 265 VAC	10 to 30 VDC				24 VDC ±10%	30 VDC or less			
Load current	5 to 100 mA	5 to 20 mA (*1)					100 mA or less		50 mA or less	
Current consumption	-	-					With 24 VDC 10 mA or less	With 24 VDC 10 mA or less	10 mA or less with 24 VDC	
Internal voltage drop	10% or less of load voltage	4 V or less					0.5 V or less			
Off-delay time	-			200±50 ms	-		-			
Indicator	Red LED(Lit when ON)				Red/greenLED (Lit when ON)	Red/greenLED (Lit when ON)	Red LED (Lit when ON)	Yellow LED (Lit when ON)	Red/green LED (Lit when ON)	
Leakage current	1 mA or less with 100 VAC, 2 mA or less with 200 VAC	1 mA or less					10 μA or less			
Lead wire length *6	1 m (oil resistant vinyl Cabtyre cable 2-conductor 0.3mm^2)	1 m (oil resistant vinyl cabtyre cable 2-conductor 0.2mm^2)	3 m (elasticity, oil resistance Vinyl cabtyre cable 2-conductor 0.2mm^2)	1 m (oil resistant vinyl cab Tire cable 2-conductor 0.3mm^2)		1 m (oil resistant vinyl cabtyre cable 2-conductor 0.2mm^2)	1 m (oil resistant vinyl cab Tire cable 3-conductor 0.2mm^2)		1 m (oil resistant vinyl Cabtyre cable 3-conductor 0.3mm^2)	1 m (oil resistant vinyl Cabtyre cable 3-conductor 0.2mm^2)
Shock resistance	980m/s^2									
Insulation resistance	100 MΩ and over with 500 VDC megger	20 MΩ and over with 500 VDC megger		100 MΩ and over with 500 VDC megger		20 MΩ and over with 500 VDC megger	20 MΩ and over with 500 VDC megger		100 MΩ and over with 500 VDC megger	20 MΩ and over with 500 VDC megger
Withstand voltage	No failure after 1 minute of 1,500 VAC application.	No failure after 1 minute of 1,000 VAC application.								
Ambient temperature	-10 to +60°C									
Degree of protection	IEC standards IP67, JIS C0920 (water tight)									
Weight	1 m: 33g 3 m: 87g 5 m: 142g	1 m: 18 g 3 m: 49 g 5 m: 80 g		1 m: 33 g 3 m: 87 g 5 m: 142 g		1 m: 18 g 3 m: 49 g 5 m: 80 g	1 m: 18 g 3 m: 49 g 5 m: 80 g		1 m: 33 g 3 m: 87 g 5 m: 142 g	1 m: 18 g 3 m: 49 g 5 m: 80 g

Descriptions	2-wire reed						
	T0H/T0V		T5H/T5V		T8H/T8V		
Applications	For programmable controller, relay		For programmable controller, relay, IC circuit (no indicator lamp), serial connection		For programmable controller, relay		
Power supply voltage	-						
Load voltage	DC12/24V	110 VAC	DC5/12/24V	110 VAC	DC12/24V	110 VAC	220 VAC
Load current	5 to 50 mA	7 to 20 mA	50 mA or less	20 mA or less	5 to 50 mA	7 to 20 mA	7 to 10 mA
Current consumption	-						
Internal voltage drop	3 V or less (For DC, at load current 30mA)		0.1V or less (*5)		4 V or less		
Indicator	Red LED (Lit when ON)		No indicator lamp		Red LED (Lit when ON)		
Leakage current	0 mA						
Lead wire length	1 m (oil resistant vinyl cabtyre cable 2-conductor 0.2mm^2)				1 m (oil resistant vinyl cabtyre cable 2-conductor 0.3mm^2)		
Shock resistance	294 m/s^2						
Insulation resistance	20 MΩ and over with 500 VDC megger				100 MΩ and over with 500 VDC megger		
Withstand voltage	No failure after 1 minute of 1,000 VAC application.				No failure after 1 minute of 1,500 VAC application		
Ambient temperature	-10 to +60°C						
Degree of protection	IEC standards IP67, JIS C0920 (water tight)						
Contact protection circuit *6	None				Yes		
Weight	1 m: 18 g 3 m: 49 g 5 m: 80 g				1 m: 33g 3 m: 87g 5 m: 142g		

*1:The above max. load current is 20 mA at 25°C. The current is lower than 20 mA if the operating ambient temperature around the switch is higher than 25˚C. (5 to 10 mA at 60°C)
*2: T2HR3, T2VR3, T3PH and T3PV switches are available as made to order when installed onto compatible cylinders.
*3: T2JH and T2JV switches are available as made to order when installed onto SRL3 (ø32 to ø100), MRL2, LCR, UCAC2 or Hand-chuck.
*4: Switch types are limited depending on cylinder. Refer to each cylinder page for the details.
*5: Internal resistance 0.5 Ω or less. *6:Refer to Intro Page 80 for contact protective measures.

T Series	AC magnetic field	Application cylinder	CAC4 SCM SSG	JSC3 SCS2 STG	JSC4 SRG3 STS/STL	JSG SRL3 UCAC2	RCC2 SRM3 USC	RCS2 SRT3 USSD	SCA2 SSD	SCG SSD2

T2YD

Specifications

Item	2-wire proximity		
	T2YD	T2YDT	T2YDU(Made to order)
Applications	Dedicated for programmable controller		
Indicator	Red/green LED (Lit when ON)		
Load voltage	24 VDC ±10%		
Load current	5 to 20mA		
Internal voltage drop	6 V or less		
Leakage current	1.0 mA or less		
Output delay time *1 (ON delay, OFF delay)	60 ms or less		
Lead wire length	1 m (oil resistant vinyl cabtyre cable ø6, 0.5 mm^2× 2-conductor) *2	1 m (flame-resistant vinyl cabtyre cable ø6, 0.5 mm^2× 2-conductor) *2	0.3 m (flame-resistant vinyl cabtyre cable with M12 cable connector, AWG20, 2-conductor)
Insulation resistance	100 MΩ and over with 500 VDC megger		
Withstand voltage	No failure after 1 minute of 1,000 VAC application.		
Shock resistance	980 m/s^2		
Ambient temperature	-10 to +60°C		
Degree of protection	JIS C0920 (water-tight), IEC standards IP67		
Weight	1 m: 61 g 3 m: 166 g 5 m: 272 g		35

*1: Indicates the time from magnetic sensor detection of the piston magnet until switch output.
*2: 3 m and 5 m lead wires are available as options.
3: The AC magnetic field proof switch (T2YD) is for AC welding machines, so the effect of strong magnetic field proof performance cannot be obtained with DC welding machines.

T Series	Cutting oil	Application cylinder	CMK2-G2/3 SSD-G2/3	HRL-G2/3 SSD2-G2/3	SCA2-G2/3 STG-G2/3	SCG-G2/3 STS/STL-G2/3

T*YLH

Specifications

Item	2-wire proximity	3-wire proximity
	T2YLH, T2YLV	T3YLH, T3YLV
Applications	Dedicated for programmable controller	Programmable controller, relay
Output method	-	NPN output
Power supply voltage	-	10 to 28 VDC
Load voltage	10 to 30 VDC	30 VDC or less
Load current	5 to 20mA	50 mA or less
Current consumption	-	10 mA or less at 24 VDC (when ON)
Internal voltage drop	4 V or less	0.5 V or less
Leakage current	1 mA or less	10 μA or less
Indicator	Red/green LED (Lit when ON)	
Lead wire	Oil resistant vinyl cabtyre cable 0.3mm^2, 2 conductor 1 m	Oil resistant vinyl cabtyre cable 0.2mm^2, 3 conductor 1 m
Insulation resistance	100 MΩ and over with 500 VDC megger	
Withstand voltage	No failure after 1 minute of 1,000 VAC application.	
Shock resistance	980m/s^2	
Hysteresis	1.5 mm or less	
Ambient temperature	-10 to +60°C	
Degree of protection	IEC Standards IP67, JIS C0920 (water-tight), oil resistance (substrate coating)	
Weight	1 m: 33g 3 m: 87g 5 m: 142g	

Dimensions

● T*H/T*WH Series
(straight lead wire)

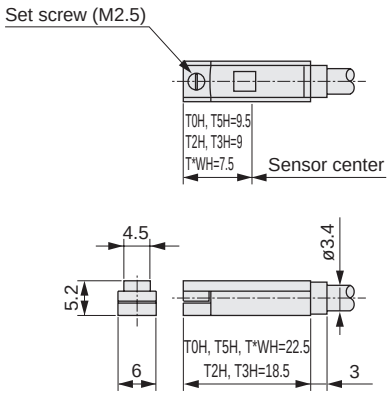

● T*YH/T2JH/T8H Series
(straight lead wire)

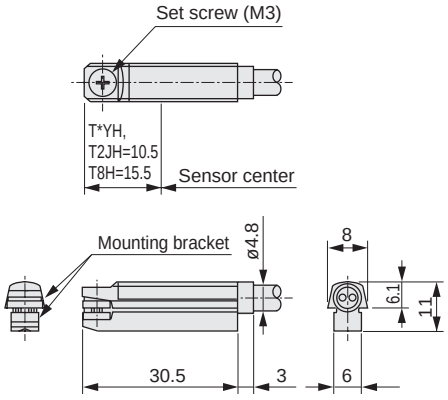

● T1H Series
(straight lead wire)

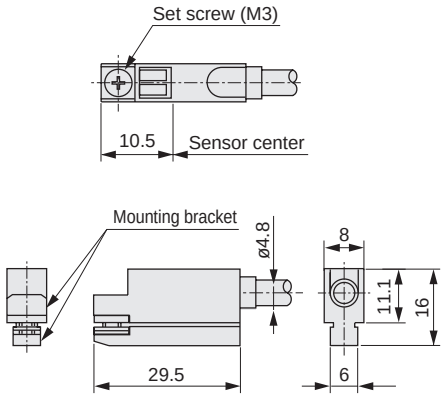

● T*V/T*WV Series
(L-shaped lead wire)

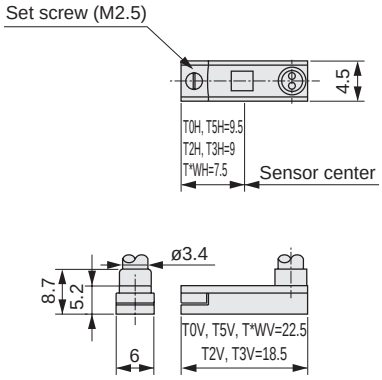

● T*YV/T2JV/T8V Series
(L-shaped lead wire)

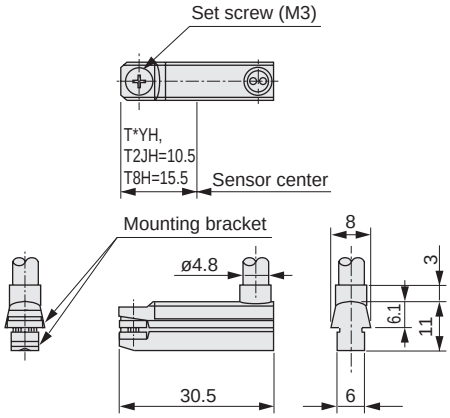

● T1V Series
(L-shaped lead wire)

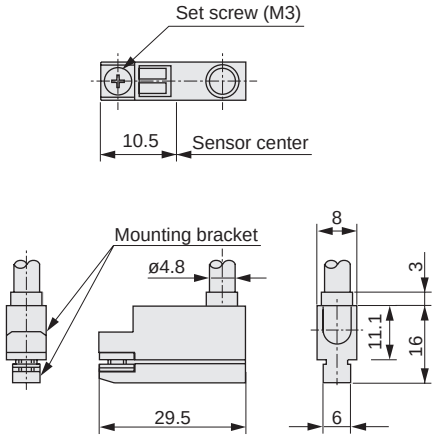

● T2YD (switch for AC magnetic field)

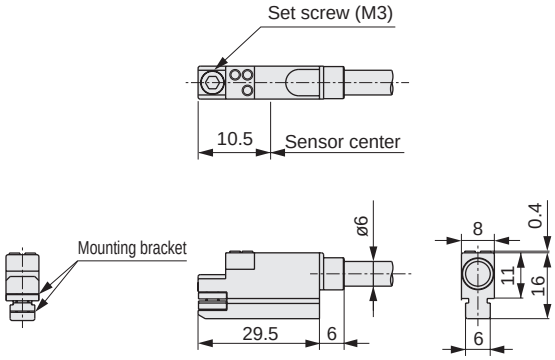

● T2YDU (switch for AC magnetic field with M12 cable connector)

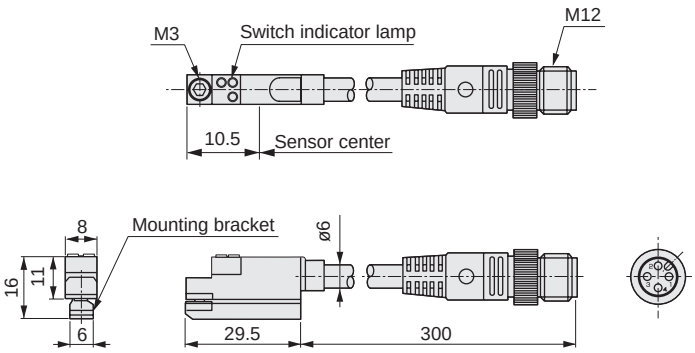

Dimensions

● T*YLH Series
(straight lead wire)

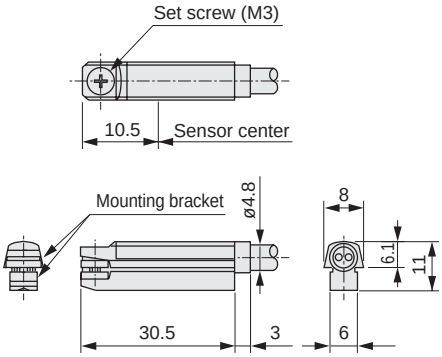

● T*YLV Series
(L-shaped lead wire)

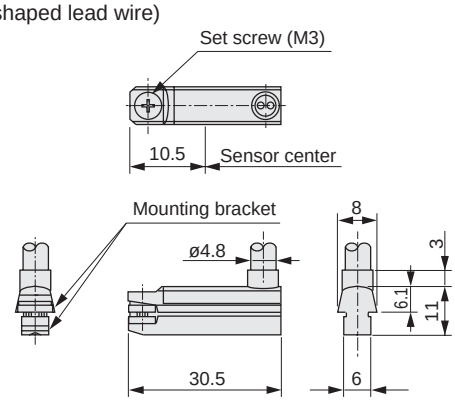

Switch internal circuit diagram

● T1H/T1V	● T2H/T2V/T2YH/T2YV/T2WH/ T2WV/T2JH/T2JV/T2YLH/T2YLV	● T3H/T3V/T3YH/T3YV/T3WH/ T3WV/T3YLH/T3YLV	● T3PH/T3PV
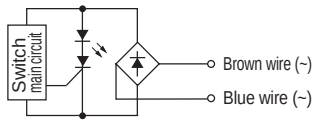	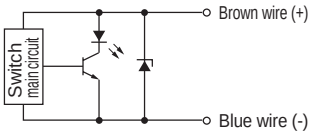	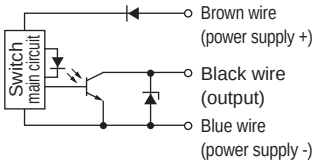	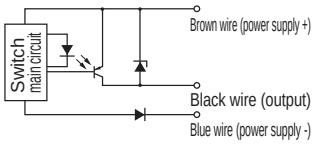
● T0H/T0V	**● T5H/T5V**	**● T8H/T8V**	**● T2YD/T2YDT/T2YDU**
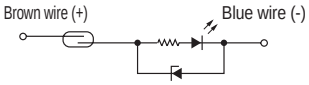		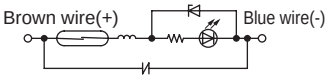	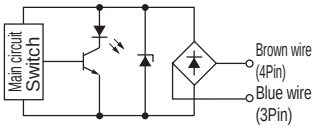 This switch is not polarized. Values in ( ) are the pin layout for T2YDU. However, 1-pin and 2-pin are NC

K Series	Application cylinder	SMG STR2

K*H
K3PH

K*V
K3PV

K*YH

K*YV

Specifications

Item	2-wire proximity		3-wire proximity		
	K2H/K2V	K2YH/K2YV	K3H/V (NPN output)	K3PH/V (PNP output)	K3YH/V (2-color LED)
Applications	Dedicated for programmable controller		For programmable controller, relay		
Output method	-		NPN output	PNP output	NPN output
Power supply voltage	-		10 to 28 VDC		
Load voltage	10 to 30 VDC		30 VDC or less		
Load current	5 to 20 mA (*1)		50 mA or less		
Current consumption	-		10 mA or less with 24 VDC	10 mA or less with 24 VDC	10 mA or less with 24 VDC
Internal voltage drop	4 V or less		0.5 V or less		
Indicator	Red LED(Lit when ON)	Red/green LED (Lit when ON)	Red LED(Lit when ON)	Yellow LED (Lit when ON)	Red/green LED (Lit when ON)
Leakage current	1 mA or less		10 μA or less		
Lead wire length	1 m (oil resistant vinyl cabtyre cable 2-conductor 0.2mm^2)	1 m (oil resistant vinyl cabtyre cable 2-conductor 0.3mm^2)	1 m (oil resistant vinyl cabtyre cable 3-conductor 0.2mm^2)		1 m (oil resistant vinyl cabtyre cable 3-conductor 0.2mm^2)
Shock resistance	980m/s^2				
Insulation resistance	20 MΩ and over with 500 VDC megger	100 MΩ and over with 500 VDC megger	20 MΩ and over with 500 VDC megger		100 MΩ and over with 500 VDC megger
Withstand voltage	No failure after 1 minute of 1,000 VAC application.				
Ambient temperature	-10 to +60°C				
Degree of protection	IEC standards IP67, JIS C0920 (water tight)				
Weight	1 m: 18 g 3 m: 49 g 5 m: 80 g	1 m: 31 g 3 m: 85 g 5 m: 139 g	1 m: 18 g 3 m: 49 g 5 m: 80 g		1 m: 31 g 3 m: 85 g 5 m: 142 g

Item	2-wire reed			
	K0H/K0V		K5H/K5V	
Applications	For programmable controller, relay		For programmable controller, relay, IC circuit (no indicator lamp), serial connection	
Power supply voltage	-			
Load voltage	12/24 VDC	110 VAC	5/12/24 VDC	110 VAC
Load current	5 to 50mA	7 to 20mA	50 mA or less	20 mA or less
Current consumption	-			
Internal voltage drop	3 V or less (with 30mA load current for DC)		0.1V or less (*3)	
Indicator	Red LED(Lit when ON)		-	
Leakage current	0 mA			
Lead wire length	1 m (oil resistant vinyl cabtyre cable 2-conductor 0.2mm^2)			
Shock resistance	294 m/s^2			
Insulation resistance	20 MΩ and over with 500 VDC megger			
Withstand voltage	No failure after 1 minute of 1,000 VAC application.			
Ambient temperature	-10 to +60°C			
Degree of protection	IEC standards IP67, JIS C0920 (water tight)			
Contact protection circuit*4	None			
Weight	1 m: 18 g 3 m: 49 g 5 m: 80 g			

*1: The above max. load current is the value at 25°C. The current is lower than 20 mA if the operating ambient temperature around the switch is higher than 25˚C. (5 to 10 mA at 60°C)
*2: Installation of K3PH, K3PV onto compatible cylinders is made to order.
*3: Internal resistance 0.5 Ω or less.
*4: Refer to Intro Page 80 for contact protective measures.

Dimensions

● K*H Series (axial lead wire)

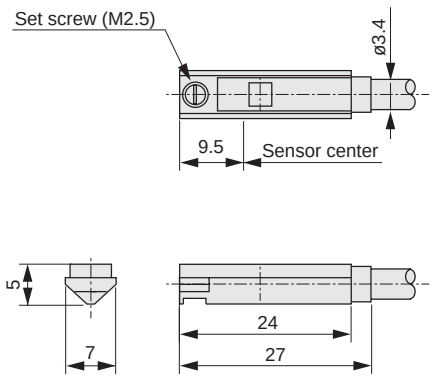

● K*YH Series
(2-color LED, axial lead wire)

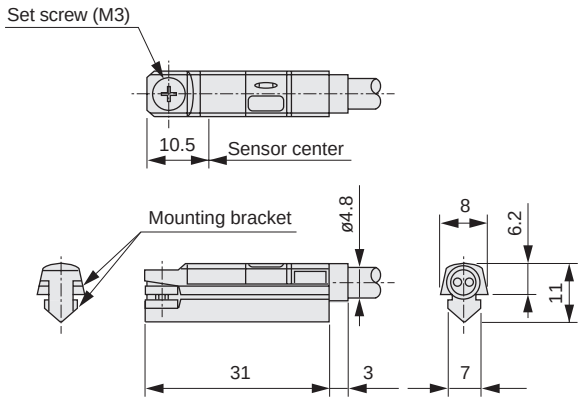

● K*V Series (L-shaped lead wire)

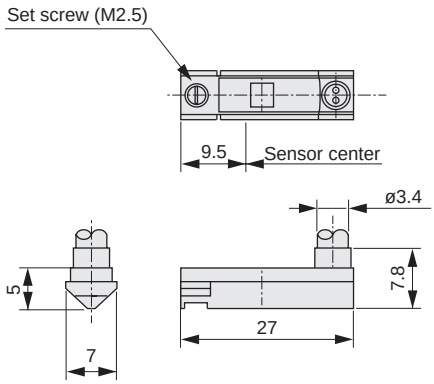

● K*YV Series
(2-color LED, L-shaped lead wire)

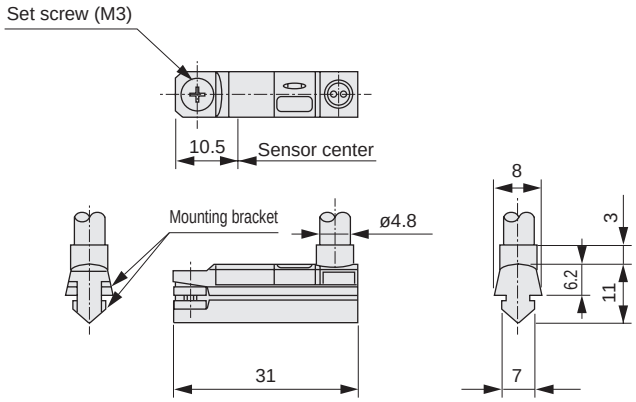

Switch internal circuit diagram

● K2H/K2V/K2YH/K2YV	● K3H/K3V/K3YH/K3YV	● K3PH/K3PV
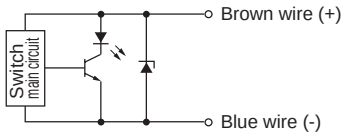	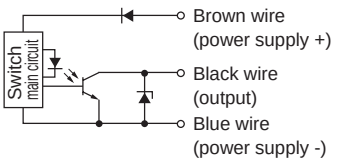	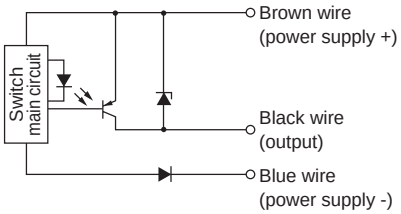
● K0H/K0V	● K5H/K5V	
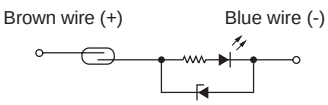		

F Series	Application cylinder	CKL2 LCG LCM LCR MDC2 MSD MSDG-L MVC RCS2 SSD2 STM hand (LSH BSA2 LHA)

Uses a bend-resistant lead wire as standard.

* There are bore sizes which cannot be combined.

F*S

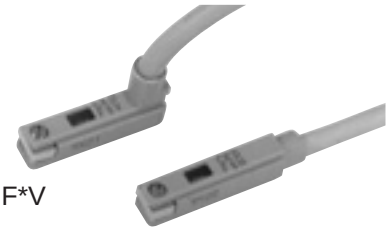

F*V

F*H

F*YV
F3PV

F*YH
F3PH

Specifications

Item	2-wire reed	2-wire proximity		3-wire proximity		
	F0H/V	F2H/V / F2S	F2YH/F2YV	F3H/V / F3S	F3PH/V	F3YH/F3YV
Applications	Dedicated for programmable controller			For programmable controller, relay		
Output method	-			NPN output	PNP output	NPN output
Power supply voltage	-			10 to 28 VDC	4.5 to 28 VDC	10 to 28 VDC
Load voltage	24 VDC ±10%	10 to 30 VDC	24 VDC ±10%	30 VDC or less		
Load current	5 to 20 mA (*1)			50 mA or less		
Current consumption	-			10 mA or less with 24 VDC		
Internal voltage drop	4 V or less			0.5 V or less	0.5 V or less at 30 mA	0.5 V or less
Indicator	Yellow LED (Lit when ON) *3		Red/green LED (Lit when ON)	Yellow LED *3 (Lit when ON)	Yellow LED (Lit when ON)	Red/green LED (Lit when ON)
Leakage current	1 mA or less			10 μA or less		
Lead wire length	1 m (elasticity, oil resistant vinyl cabtyre cable 2-conductor 0.15mm^2)			1 m (elasticity, oil resistant vinyl cabtyre cable 3-conductor 0.15mm^2)		
Shock resistance	294m/s^2	980 m/s^2				
Insulation resistance	20 MΩ and over with 500 VDC megger					
Withstand voltage	No failure after 1 minute of 1,000 VAC application.					
Ambient temperature	-10 to +60°C					
Degree of protection	IEC standards IP67, JIS C0920 (water-tight)					
Contact protection circuit*4	None	-				
Weight	1 m: 10 g 3 m: 29 g			1 m: 10 g 3 m: 29 g		

*1:The max. load current is 20mA at 25°C. The current is lower than 20 mA if the operating ambient temperature around the switch is higher than 25˚C. (5 to 10 mA at 60°C)
*2: With F2S and F3S, if mounting two switches in one groove to enable detection at both ends, mount them so that their set screws face outward.
*3: Indicators for F2S and F3S are red.
*4: Refer to Intro Page 80 for contact protective measures.
*5: Uses a bend-resistant lead wire.

Dimensions

● F*S Series (Lead wire vertical lead-out, for short stroke detection)

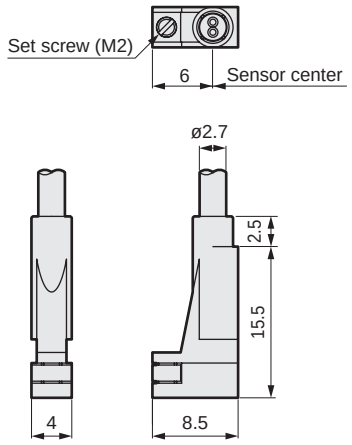

● F*H Series (straight lead wire)

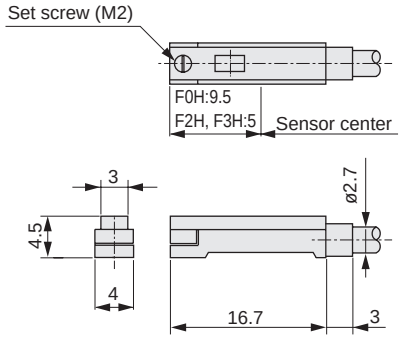

● F*V Series (L-shaped lead wire)

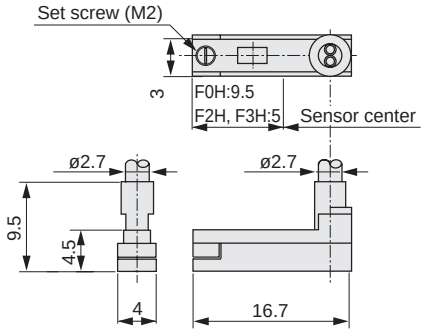

● F*YH/F3PH Series (straight lead wire)

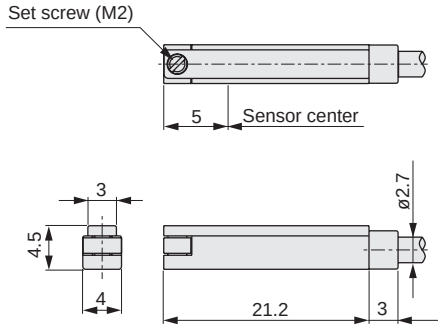

F*YV/F3PV Series (L-shaped lead wire)

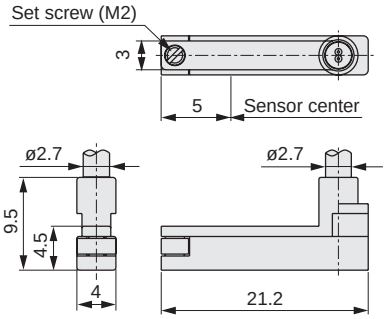

Switch internal circuit diagram

● F0H/F0V	● F2S/F2H/F2V/F2YH/F2YV	● F3S/F3H/F3V/F3YH/F3YV	● F3PH/F3PV
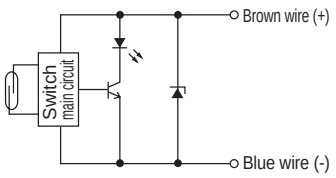	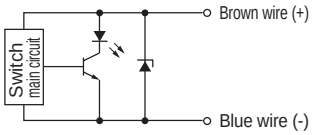	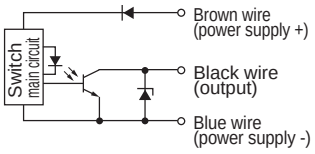	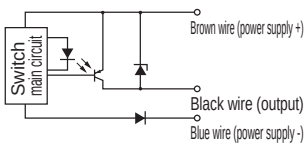

H Series	Strong magnetic field proof	Applicable cylinder	CAC4-L2 GLC-L2 JSC3-L2 SCA2-L2 SHC-L2 UCAC2-L2 USC-L2

H0

H0Y

Specifications

Item	2-wire reed		
	H0		H0Y (2-color LED)
Applications	For programmable controller, relay		Dedicated for programmable controller
Load voltage	12/24 VDC	110 VAC	24 VDC ±10%
Load current	5 to 50 mA	7 to 20 mA	5 to 20 mA
Internal voltage drop	5 V or less		6 V or less
Indicator	Green LED (Lit when ON)		Red/green LED (Lit when ON)
Leakage current	0 mA		10 μA or less
Lead wire length	1 m (flame-resistant cabtyre cable 2-conductor 0.5 mm^2)		
Insulation resistance	100 MΩ and over with 500 VDC megger		
Withstand voltage	No failure after 1 minute of 1,000 VAC application.		
Shock resistance	294 m/s^2		
Ambient temperature	-10 (14°F) to +60°C (140°F)		
Degree of protection	IEC Standard IP67, JIS C0920 (water-tight), oil resistance		
Contact protection circuit *1	None		
Weight	1 m:76 g 3 m:181 g 5 m:289 g		

*1: Refer to Intro Page 80 for contact protective measures.

Dimensions

● H Series (strong magnetic field proof)

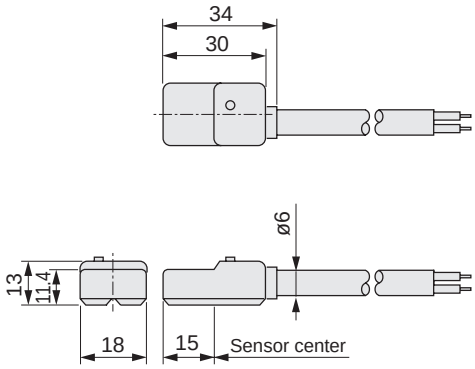

Switch internal circuit diagram

● H0

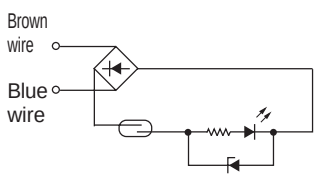

This switch is not polarized.

● H0Y

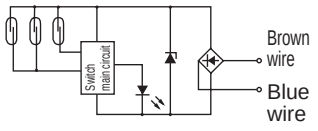

This switch is not polarized.

V Series	Small strong magnetic field proof	Applicable cylinder	SSD-L4 SSD2-L4 USSD-L4

V0

Specifications

Item	2-wire reed	
	V0	
Applications	For relay, programmable controller	
Load voltage	24 VDC	110 VAC
Load current	5 to 50 mA	7 to 20 mA
Internal voltage drop	3.0 V or less (with 40 mA load current)	
Indicator	LED (Lit when ON)	
Leakage current	0 mA	
Lead wire length	1 m (flame-resistant cabtyre cable 2-conductor 0.5 mm^2)	
Insulation resistance	100 MΩ and over with 500 VDC megger	
Withstand voltage	No failure after 1 minute of 1,000 VAC application.	
Shock resistance	294 m/s^2	
Ambient temperature	-10 (14°F) to +60°C (140°F)	
Degree of protection	IEC Standards IP67, JIS C0920 (water-tight), oil resistance	
Contact protection circuit *1	None	
Weight	1 m:63 g 3 m:170 g 5 m:277 g	

*1: Refer to Intro Page 80 for contact protective measures.

Dimensions

● V Series (strong magnetic field proof)

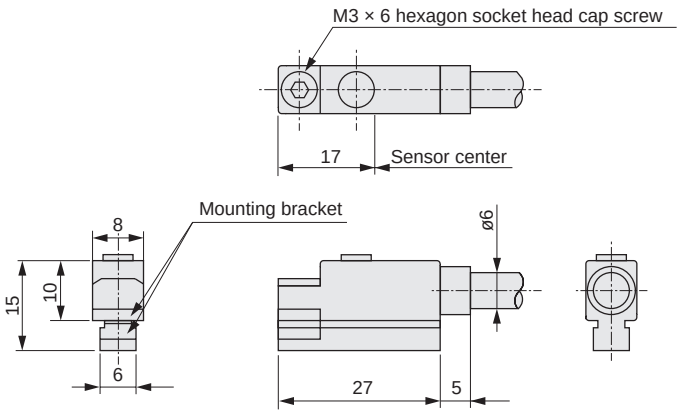

Switch internal circuit diagram

● V0

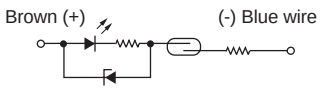

E Series	Heat resistance	Applicable cylinder	SCA2-L2T(E0) SSD-T1L(ET0) SSD2-T1L(ET0)

(Excluding E0)

E0

ET0

Specifications

Item	2-wire reed				
	E0			ET0	
Applications	For relay, programmable controller				
Load voltage	12/24 VDC	110 VAC	220 VAC	12/24 VDC	110 VAC
Load current	5 to 50 mA	7 to 20 mA	7 to 10 mA	5 to 50 mA	7 to 20 mA
Internal voltage drop	4 V or less			3.0 V or less	
Leakage current	0 mA				
Indicator	Red LED (Lit when ON)			Yellow LED (Lit when ON)	
Conduit screw	G1/2			-	
Lead wire length	-			1 m (heat-resistant fluorine insulation cabtyre cable 2-conductor 0.5 mm^2)	
Insulation resistance	100 MΩ and over with 500 VDC megger				
Withstand voltage	No failure after 1 minute of 1,500 VAC application.			No failure after 1 minute of 1,000 VAC application.	
Shock resistance	294 m/s^2				
Ambient temperature	-10 (14°F) to +120°C (248°F)			-10 (14°F) to +150°C (302°F)	
Degree of protection	IEC Standards IP67, JIS C0920 (water-tight), oil resistance				
Contact protection circuit *1	None				
Weight	164 g			44 g	

*1: Refer to Intro Page 80 for contact protective measures.

Dimensions

● E Series

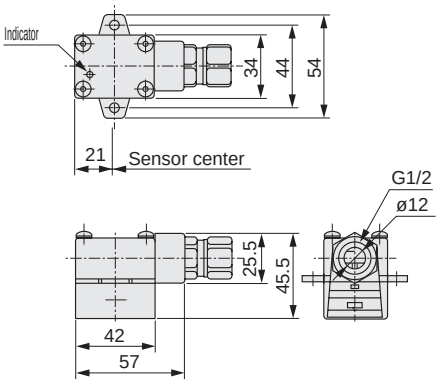

● ET0H Series (axial lead wire)

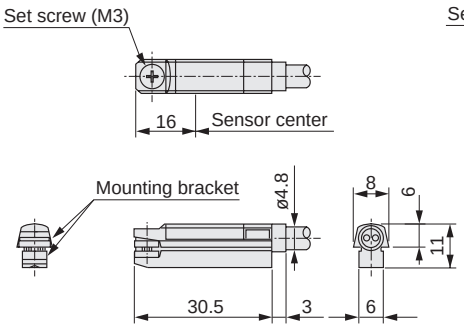

● ET0V Series (L-shaped lead wire)

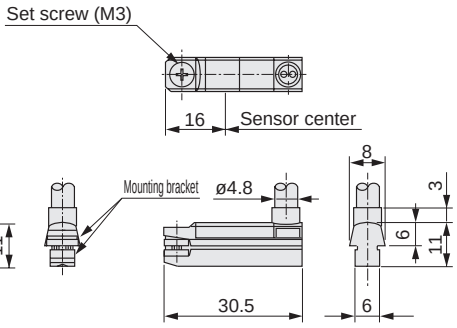

Switch internal circuit diagram

● E0	● ET0H
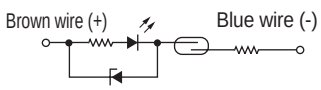	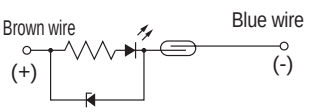

Contact protecting circuit box	SKAC/SKDC

Specifications

Item	For AC circuit		For DC circuit
	SKAC		SKDC
Load voltage	100/110 VAC	200/220 VAC	24 VDC
Load current	20 mA or less	10 mA or less	50 mA or less
Lead wire length	1 m (oil resistant vinyl cabtyre cable 2-conductor 0.2 mm^2)		
Shock resistance	980 m/s^2		
Insulation resistance	100 MΩ or more at 500 VDC megger		
Withstand voltage	No failure after 1 minute of 1,500 VAC application		
Ambient temperature	-10 (14°F) to +60°C (140°F)		
Degree of protection	IEC Standards IP67, JIS C0920 (water-tight), oil resistance		

How to order

SW - SKAC

Code	Description
SKAC	Circuit AC
SKDC	Circuit DC

Dimensions

● SKAC/SKDC Series

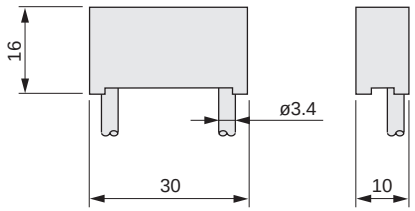

Internal circuit diagram

● SKAC/SKDC

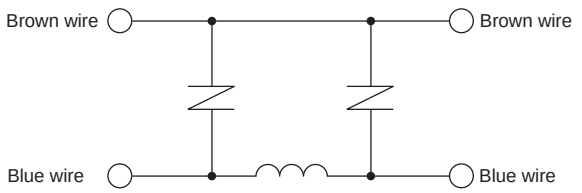

*: Input side and output side do not have polarity, so either can be connected to the switch.

Note: SKAC is for AC circuit only and SKDC is for DC circuit only.

Cylinder switch with connector

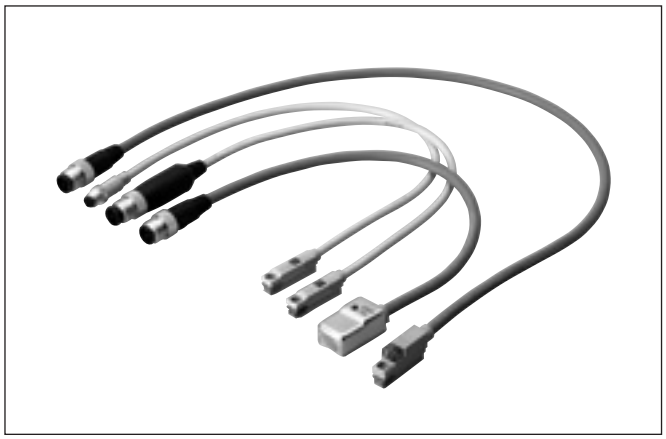

Features

M8 and M12 connectors with high versatility are adopted

- Conforms to standards No. NECA4202 and IEC947-5-2
- Reduced work-hours for piping and ease of maintenance
- IP67 is adopted as degree of protection
- Protective cover for anti-spatter adherence is available

●For T0H

●For T2YD

How to order

* This is a made to order product.

●2-wire cylinder switch

SW - T0 (A) H (B) F (C) K (D)

Ⓐ Model	Ⓑ Lead wire leadout direction		Ⓒ Connector type, PIN configuration		Lead wire length		Ⓓ Option *3	
T0	H	Straight type	F	M8 connector 4PIN (+) 3-pin (-) *1	Blank	0.3m	K	Protective cover for anti-spatter adherence
T2	V	L-shaped type	M	M12 connector 1PIN (+) 4PIN (-)				
T2W			U	M12 connector 3, 4PIN not polarized *2				
T2YL								
K2Y								
F2Y								

*3: Applies only to T0H□□

*1: Supports only T0, T2, T2W
*2: Does not support T2YL.
Note that the "internal voltage drop" will be higher by 1 V than the specification value listed in the catalog.

●3-wire cylinder switch

SW - T3 (A) H (B) F (C)

Ⓐ Model	Ⓑ Lead wire leadout direction		Ⓒ Type of connector		Lead wire length	
T3	H	Straight type	F	M8 1PIN(+) 3PIN(-) 4PIN:(OUT)	Blank	0.3m
T3P	V	L-shaped type				
T3W						

●Cylinder switch for strong magnetic field

SW - H0 (A) M (B)

Ⓐ Model	Ⓑ Type of connector		Lead wire length	
H0	M	M12 connector 1, 4PIN not polarized *4	Blank	0.3m
H0Y	U	M12 connector 3, 4PIN not polarized *5		
V0				

*4: Supports only H0, H0Y
*5: V0 only 4PIN (+) 3 PIN (-)

●Cylinder switch dedicated for AC magnetic field

SW - T2YD (A) G (B) K (C)

Ⓐ Model	Ⓑ Type of connector		Lead wire length		Ⓒ Option	
T2YD	G	Spatter-proof lead wire M12 connector 1, 4-pin no polarity	Blank	0.3m	K	Protective cover for anti-spatter adherence
	B	Spatter-proof lead wire M12 connector 3, 4-pin no polarity				
	U	Flame-resistant lead wire UL electric wire M12 connector 3, 4PIN not polarized				
	W	Flame-resistant lead wire UL electric wire M12 connector 1, 4PIN not polarized				

*6 : Cylinder switch specifications are the same as those of lead wire. Refer to Ending Pages 16 to 26 for details.

Pin array of connector

Series	Connector pin array					
	Code	Type of connector	1PIN	2PIN	3PIN	4PIN
2-wire	F	M8	-	-	(-)	(+)
	M	M12	(+)	-	-	(-)
	U		-	-	(±)	(±)
Strong magnetic field proof Dedicated for AC magnetic field	M, G, W		(±)	-	-	(±)
	U, B*		-	-	(±)	(±)
3-wire	F	M8	(+)	-	(-)	(OUT)

* Only SW-V0U is polarized (4-pin (+), 3PIN (-)).

Connector specifications

Item	M8	M12
Pin array	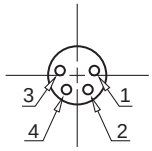	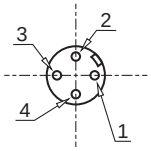
Shock resistance	294 m/s²	
Degree of protection	IP67	
Insulation resistance	100 MΩ with 500 VDC megger	
Withstand voltage	1000 VAC for 1 minute (between contacts and between contact housings) leakage current 1 mA or less	

dimensions

①M12 connector (connector for 2-wire cylinder switch, only pin array code of "U")

Standard for outer shape of connector section: IEC64076-2-101

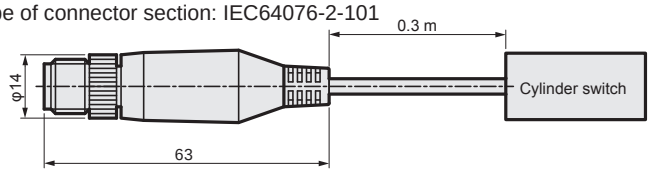

②M12 connector (M12 connector other than ①)

Standard for outer shape of connector section: IEC64076-2-101

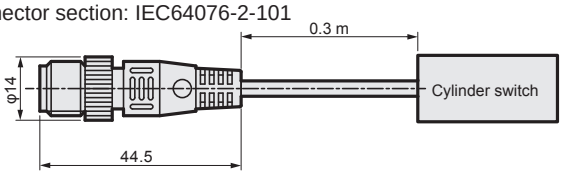

③M8 connector (supporting all models)

Standard for outer shape of connector section: IEC64076-2-104

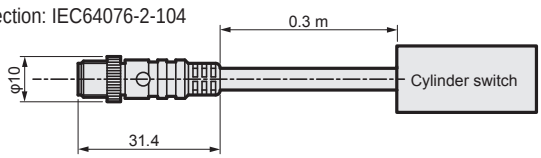

* For the external dimensions of the cylinder switch, refer to Ending Pages 18 to 26.

Series option

T type cylinder switch with off delay timer
T2JH/T2JV

Overview

Optimum for intermediate detection of high speed cylinder.
Off delay timer realizes secure PC input.

Features

- PC input malfunctions at cylinder intermediate detection are prevented.
- Off delay timer 200±50 ms
- Installation to rodless cylinder SRL3 is possible.
- A great variety of cylinders.

* Made-to-order product when a switch is installed on the cylinder.
* Switchs are limited depending on cylinder. Refer to each cylinder page for the details.

T type cylinder switch coolant proof
T2YLH/V, T3YLH/V

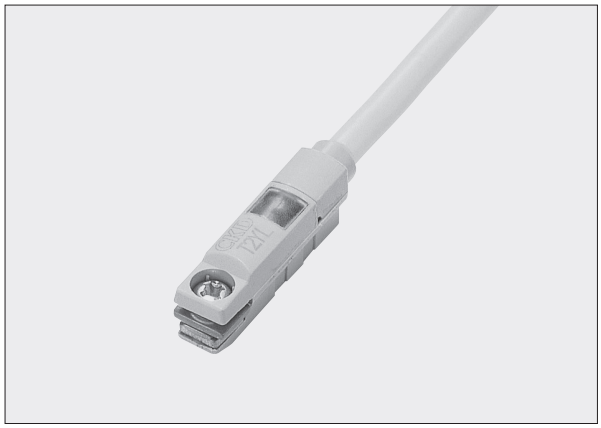

Overview

This is a cylinder switch that prevents coolant for machine tools used at machining site, etc., from entering the cylinder switch.

Features

- Oil resistance increased by applying coating to the circuit board.
  Usable even in an environment exposed to coolant.
- A great variety of cylinders

* Made-to-order product when a switch is installed on the cylinder.

Operational principle

Proximity switch

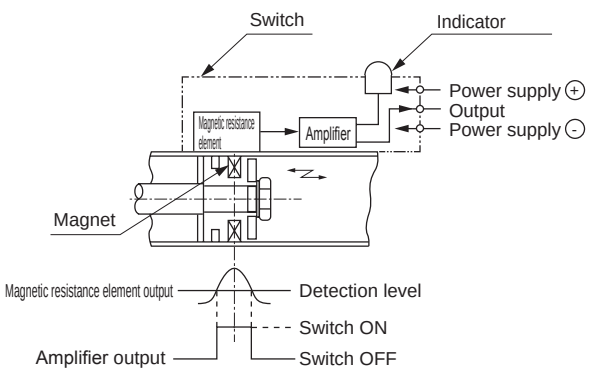

The magnetic field changes when the piston's magnet approaches, and the magnetic resistance element's output voltage changes as shown in the figure. Switching output as shown above is attained when this signal is amplified.

Reed switch

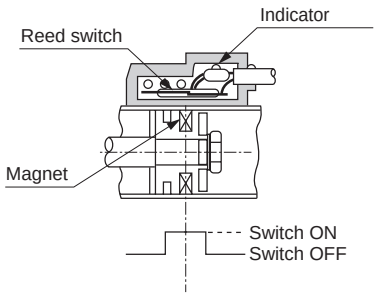

The magnetic field is generated when the piston's magnet approaches, and the contact matching the reed switch direction is magnetized to generate an attraction force and close the contact.

Switch mounting position

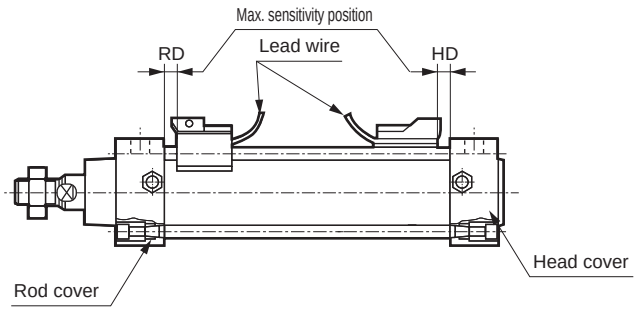

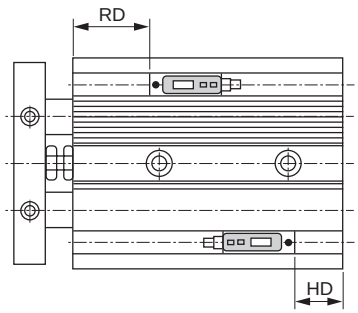

● Stroke end installation

To check that the switch functions at the max. sensitivity position, mount 1 each at the rod side RD dimension position and at the head side HD dimension position.
HD and RD dimensions differ based on a cylinder. Refer to each cylinder dimension.
Mount the switch so the lead wire comes to the inside as shown above.

● Intermediate stroke position installation

In detection at the middle of the stroke, fix the piston at the stop position, and move the switch back and forth over the piston. Find the position where the switch turns ON first. The point between these 2 positions is the max. sensitivity position at that piston position, and is the installation position.

● Circumference direction installation

Differs depending on mounting bracket. When using a band, no limits are set on circumference direction.When using a tie rod, the position can be rotated in 90° increments. Circumferential rotation is not possible for the rail method.

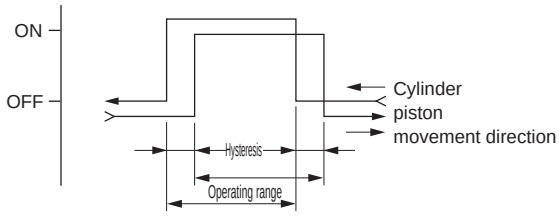

Operating range

● The operating range is from the point where the piston moves and the switch turns ON to the point where the piston moves further in the same direction and the switch turns OFF.

The center of the operating range is max. sensitivity position. If this position is set as the piston stop position, it is not affected by disturbance and switch operation is stable.

Hysteresis

● Hysteresis is the distance from the point where the piston moves and the switch turns ON to the point where the piston moves in the reverse direction and the switch turns OFF. If the piston stops between these points, switch operation becomes unstable and is easily adversely affected by external sources. Please be careful.

Operating range and hysteresis of each cylinder model with switch

(Unit: mm)

Model No.	Bore size (mm)	Proximity switch				Reed switch		Page
		Operating range		Hysteresis		Operating range	Hysteresis	
		1-color type	2-color type	1-color type	2-color type			
Pencil shaped cylinder ● Applicable switch: Proximity switch (T2□, T3□, T2W□, T3W□), reed switch (T0□, T5□)								
SCP*3	ø6	1.5 to 4	2.5 to 5	1.5 or less	1.0 or less	4 to 6	3 or less	I-3
	ø10	1.5 to 5.5	2.5 to 6			3.5 to 7		
	ø16	2 to 6	2.5 to 6			3.5 to 7.5		
Medium bore size cylinder ● Applicable switch: Proximity switch (T2□, T3□, T3P□, T2J□, T2W□, T3W□, T2Y□, T3Y□, T1□), reed switch (T0□, T5□, T8□)								
CMK2	ø20	2.5 to 5.5	3.5 to 7.5	1.5 or less	1.0 or less	6.5 to 11	3 or less	I-79
	ø25	2.5 to 5.5	3.5 to 7.5			7.5 to 12		
	ø32	2.5 to 6	3.5 to 8			6.5 to 11.5		
	ø40	3 to 7	4 to 9			7.5 to 13.5		
Medium bore size cylinder ● Applicable switch: Proximity switch (T2□, T3□, T3P□, T2J□, T2W□, T3W□, T2Y□, T3Y□, T1□), reed switch (T0□, T5□, T8□)								
CMA2	ø20	3 to 6	5 to 6.5	1.5 or less	1.0 or less	8.5 to 12	3 or less	I-191
	ø30	3 to 5.5	6 to 7			8 to 13		
	ø40	2.5 to 5.5	5.5 to 7.5			8.5 to 12.5		
Round shaped cylinder • Applicable switch: Proximity switch (T2□, T3□, T3P□, T2J□, T2W□, T3W□, T2Y□, T3Y□, T2YD, T1□), reed switch (T0□, T5□, T8□)								
SCM	ø20	3 to 8	4.5 to 9	1.5 or less	1.0 or less	6 to 14	3 or less	I-213
	ø25	3 to 9	5 to 9			5 to 14		
	ø32	3 to 8	5 to 9			5 to 12		
	ø40	3 to 9	5.5 to 9.5			6 to 14		
	ø50	3 to 9	6 to 10			6 to 14		
	ø63	3 to 9	6 to 10.5			7 to 15		
	ø80	4 to 10	6.5 to 11			7 to 15		
	ø100	4 to 10	7 to 11.5			9 to 15		
Tie rod cylinder ● Applicable switch: Proximity switch (T2□, T3□, T3P□, T2J□, T2W□, T3W□, T2Y□, T3Y□, T2YD, T1□), reed switch (T0□, T5□, T8□)								
SCG	ø32	2 to 7	6 to 9	1.5 or less	1.0 or less	6 to 11	3 or less	I-335
	ø40	2 to 7	6.5 to 9			7 to 12		
	ø50	2 to 7	7 to 10			7.5 to 12		
	ø63	2 to 7.5	7 to 10			8.5 to 13		
	ø80	2.5 to 8	7.5 to 10.5			9 to 13.5		
	ø100	2.5 to 8	8 to 11			9 to 14		
Medium bore size cylinder ● Applicable switch: Proximity switch (T2□, T3□, T3P□, T2J□, T2W□, T3W□, T2Y□, T3Y□, T2YD, T1□), reed switch (T0□, T5□, T8□)								
SCA2	ø40	2 to 7	3 to 10	1.5 or less	1.0 or less	5 to 12.5	3 or less	I-427
	ø50	2 to 7.5	3 to 10			5.5 to 13.5		
	ø63	2.5 to 7.5	3.5 to 10.5			5.5 to 14		
	ø80	3 to 8	4 to 11.5			6.5 to 14.5		
	ø100	3 to 8.5	4 to 11.5			6.5 to 15.5		
Medium bore size cylinder ● Applicable switch: Reed switch for strong magnetic fields (H0□) * The values in ( ) indicate H0Y.								
SCA2-L2	ø40	-		-	-	4 to 7.5(10.5 to 13.5)	3 or less	I-427
	ø50					4 to 7.5(11 to 14)		
	ø63					5 to 8(11.5 to 14.5)		
	ø80					5 to 8(10.5 to 14.5)		
	ø100					5 to 8(10.5 to 14.5)		
Large bore size cylinder ● Applicable switch: Proximity switch (T2□, T3□, T3P□, T2J□, T2W□, T3W□, T2Y□, T3Y□, T2YD, T1□), reed switch (T0□, T5□, T8□)								
SCS2	ø125	7.5 to 14	14 to 21	1.5 or less	1.0 or less	11 to 16	3 or less	I-605
	ø140	7.5 to 14	18 to 26					
	ø160	7.5 to 14	18 to 26					
	ø180	7.5 to 14	18 to 26					
	ø200	7.5 to 14	18 to 26					

Operating range and hysteresis of each cylinder model with switch

(Unit: mm)

Model No.	Bore size (mm)	Proximity switch				Reed switch		Page
		Operating range		Hysteresis		Operating range	Hysteresis	
		1-color type	2-color type	1-color type	2-color type			
Tie rod cylinder ● Applicable switch: Proximity switch (T2□, T3□, T3P□, T2J□, T2W□, T3W□, T2Y□, T3Y□, T1□), reed switch (T0□, T5□, T8□)								
CKV2	ø20	2.5 to 5.5	3.5 to 7.5	1.5 or less	1.0 or less	6.5 to 11	3 or less	I-659
	ø25	2.5 to 5.5	3.5 to 7.5			7.5 to 12		
	ø32	2.5 to 6	3.5 to 8			6.5 to 11.5		
	ø40	3 to 7	4 to 9			7.5 to 13.5		
Tie rod cylinder ● Applicable switch: Proximity switch (T2□, T3□, T3P□, T2J□, T2W□, T3W□, T2Y□, T3Y□, T2YD, T1□), reed switch (T0□, T5□, T8□)								
CAV2-L COVP2-L COVN2-L	ø50	3.8 to 6.7	4 to 6	0.8 or less	0.7 or less	7.7 to 8.3	1 or less	I-687
	ø75	3.8 to 6.7	4 to 6			7.7 to 8.3		
	ø100	3.8 to 6.7	4 to 6			7.7 to 8.3		
Compact cylinder ● Applicable switch: Proximity switch (T2□, T3□, T3P□, T2J□, T2W□, T3W□, T2Y□, T3Y□, T2YD, T1□), reed switch (T0□, T5□, T8□)								
SSD2	ø12	1.5 to 5.5	3 to 6	1.5 or less	1.0 or less	5 to 8	3 or less	I-729
	ø16	1.5 to 4.5	3 to 7			4 to 9		
	ø20	3 to 8	4.5 to 8			6 to 14		
	ø25	3 to 9	4.5 to 8			5 to 14		
	ø32	3 to 8	4.5 to 8			5 to 12		
	ø40	3 to 9	5 to 8.5			6 to 14		
	ø50	3 to 9	5.5 to 9.5			6 to 14		
	ø63	3 to 9	5.5 to 9.5			7 to 15		
	ø80	4 to 10	6 to 10			7 to 15		
	ø100	4 to 10	6 to 10			9 to 15		
	ø125	4 to 10	8 to 10			9 to 15		
	ø140	4 to 10	8 to 10			9 to 15		
	ø160	4 to 10	8 to 10			9 to 15		
Compact cylinder ● Applicable switch: Reed switch (ET0□)								
SSD2-T1L	ø16	-		-	-	8 to 11.5	3 or less	I-729
	ø20					9 to 13.5		
	ø25					9.5 to 14		
	ø32					9 to 13		
	ø40					9 to 14		
	ø50					11 to 16		
	ø63					13 to 18		
Compact cylinder • Applicable switch: Proximity switch (T2□, T3□, T3P□, T2J□, T2W□, T3W□, T2Y□, T3Y□, T2YD, T1□), reed switch (T0□, T5□, T8□)								
SSG	ø12	1.5 to 5.5	3 to 6	1.5 or less	1.0 or less	5 to 8	3 or less	I-1049
	ø16	1.5 to 4.5	3 to 7			4 to 9		
	ø20	3 to 8	4.5 to 8			6 to 14		
	ø25	3 to 9	4.5 to 8			5 to 14		
	ø32	3 to 8	4.5 to 8			5 to 12		
	ø40	3 to 9	5 to 8.5			6 to 14		
	ø50	3 to 9	5.5 to 9.5			7 to 15		
	ø63	3 to 9	5.5 to 9.5			7 to 15		
	ø80	4 to 10	6 to 10			9 to 15		
	ø100	4 to 10	6 to 10			9 to 15		

Operating range and hysteresis of each cylinder model with switch

(Unit: mm)

Model No.	Bore size (mm)	Proximity switch				Reed switch		Page
		Operating range		Hysteresis		Operating range	Hysteresis	
		1-color type	2-color type	1-color type	2-color type			
Compact cylinder ● Applicable switch: Proximity switch (T2□, T3□, T3P□, T2J□, T2W□, T3W□, T2Y□, T3Y□, T2YD, T1□), reed switch (T0□, T5□, T8□)								
SSD	ø12	1.5 to 5.5	3 to 6	1.5 or less	1.0 or less	5 to 8	3 or less	I-1065
	ø16	1.5 to 4.5	3 to 7			4 to 9		
	ø20	3 to 8	4.5 to 8			6 to 14		
	ø25	3 to 9	4.5 to 8			5 to 14		
	ø32	3 to 8	4.5 to 8			5 to 12		
	ø40	3 to 9	5 to 8.5			6 to 14		
	ø50	3 to 9	5.5 to 9.5			6 to 14		
	ø63	3 to 9	5.5 to 9.5			7 to 15		
	ø80	4 to 10	6 to 10			7 to 15		
	ø100	4 to 10	6 to 10			9 to 15		
	ø125	4 to 10	8 to 10			9 to 15		
	ø140	4 to 10	8 to 10			9 to 15		
	ø160	4 to 10	8 to 10			9 to 15		
Compact cylinder ● Applicable switch: Reed switch (ET0□)								
SSD-T1L	ø16	-		-	-	8 to 11.5	3 or less	I-1065
	ø20					9 to 13.5		
	ø25					9.5 to 14		
	ø32					9 to 13		
	ø40					9 to 14		
	ø50					11 to 16		
	ø63					13 to 18		
Small direct mounting cylinder ● Applicable switch: Proximity switch (F2□, F3□), reed switch (F0□)								
MDC2	ø6	1.5 to 3.5	-	1.0 or less	-	3.5 to 6.0	1.0 or less	I-1327
	ø8							
	ø10							
MDC2-X	ø6	2.0 to 3.5	-	1.0 or less	-	5.5 to 7.5	1.0 or less	
	ø8							
	ø10							
MDC2-Y	ø6	1.5 to 3.5	-	1.0 or less	-	4.5 to 6.0	1.0 or less	
	ø8							
	ø10							
Small cylinder/suction pad ● Applicable switch: Proximity switch (F2□, F3□), reed switch (F0□)								
MVC	ø6	1.5 to 3.5	-	1.0 or less	-	3.5 to 6.0	1.0 or less	I-1353
	ø10					4.5 to 6.0		
Compact cylinder ● Applicable switch: Proximity switch (K2□, K3□, K3P□, K2Y□, K3Y□), reed switch (K0□, K5□)								
SMG	ø6	1.5 to 7	3.5 to 7.5	2 or less	1.5 or less	3 to 9.5	3 or less	I-1365
	ø10	1.5 to 7	3.5 to 7.5			3.5 to 9.5		
	ø16	1.5 to 7	4.5 to 8.5			4 to 11		
	ø20	2.5 to 9	5 to 9			5 to 12.5		
	ø25	3.5 to 11	5.5 to 9.5			6.5 to 14		
	ø32	3.5 to 11.5	1.5 to 10.5			5.5 to 14		
Small compact cylinder ● Applicable switch: Proximity switch (F2□, F3□), reed switch (F0□)								
MSD-*L MSDG-L	ø6	1.5 to 3.0	-	1.0 or less	-	5 to 6	1.0 or less	I-1397
	ø8	1.5 to 3.5	-			5.5 to 6.5		
	ø12	1.5 to 3.5	-			5.5 to 7.5		
	ø16	1.5 to 3.5	-			4.5 to 7		

Operating range and hysteresis of each cylinder model with switch

(Unit: mm)

Model No.	Bore size (mm)	Proximity switch				Reed switch		Page
		Operating range		Hysteresis		Operating range	Hysteresis	
		1-color type	2-color type	1-color type	2-color type			
Flat compact cylinder ● Applicable switch: Proximity switch (M2V, M3V, M3PV, M2WV, M3WV), reed switch (M0V, M5V)								
FCS-L	ø25	9 to 12	6 to 11	1.5 or less	1.0 or less	7 to 8.5	3 or less	I-1455
	ø32	9 to 12	6 to 11			7 to 8.5		
	ø40	8.5 to 12	6 to 11			7 to 8.5		
	ø50	8 to 12	6 to 11			6.5 to 8.5		
	ø63	8 to 12	6 to 11			6.5 to 8.5		
FCH-L **FCD-L** **FCD-DL** **FCD-KL**	ø25	6 to 12	5 to 11	1.5 or less	1.0 or less	7 to 12	3 or less	
	ø32	6 to 12	5 to 11			7 to 12		
	ø40	6 to 12	5 to 11			7 to 12		
	ø50	6 to 12	5 to 11			7 to 12		
	ø63	6 to 12	5 to 11			7 to 12		
Stopper cylinder ● Applicable switch: Proximity switch (T2□, T3□, T3P□, T2J□, T2W□, T3W□, T2Y□, T3Y□, T1□), reed switch (T0□, T5□, T8□)								
STK	ø20	3 to 8	4.5 to 8	1.5 or less	1.5 or less	6 to 14	3 or less	I-1491
	ø32	3 to 8	4.5 to 8			5 to 12		
	ø40	3 to 9	5 to 8.5			6 to 14		
	ø50	3 to 9	5.5 to 9.5			6 to 14		
Brake cylinder ● Applicable switch: Proximity switch (M2V, M3V, M3PV, M2WV, M3WV), reed switch (M0V, M5V)								
ULKP	ø16	5 to 9.5	4.5 to 9.5	1.5 or less	1.0 or less	5 to 9.5	3 or less	II-661
Brake cylinder ● Applicable switch: Proximity switch (T2□, T3□, T3P□, T2J□, T2W□, T3W□, T2Y□, T3Y□, T1□), reed switch (T0□, T5□, T8□)								
ULK	ø20	2.5 to 5.5	3.5 to 7.5	1.5 or less	1.0 or less	6.5 to 11	3 or less	II-661
	ø25	2.5 to 5.5	3.5 to 7.5			7.5 to 12		
	ø32	2.5 to 6	3.5 to 8			6.5 to 11.5		
	ø40	3 to 7	4 to 9			7.5 to 13.5		
Brake cylinder ● Applicable switch: Proximity switch (T2□, T3□, T3P□, T2J□, T2W□, T3W□, T2Y□, T3Y□, T1□), reed switch (T0□, T5□, T8□)								
JSK2	ø20	2.5 to 5.5	3.5 to 7.5	1.5 or less	1.0 or less	6.5 to 11	3 or less	II-691
	ø25	2.5 to 5.5	3.5 to 7.5			7.5 to 12		
	ø32	2.5 to 6	3.5 to 8			6.5 to 11.5		
	ø40	3 to 7	4 to 9			7.5 to 13.5		
Brake cylinder ● Applicable switch: Proximity switch (T2□, T3□, T3P□, T2J□, T2W□, T3W□, T2Y□, T3Y□, T1□), reed switch (T0□, T5□, T8□)								
JSM2	ø20	3 to 6	5 to 6.5	1.5 or less	1.0 or less	8.5 to 12	3 or less	II-710
	ø30	3 to 5.5	6 to 7			8 to 13		
	ø40	2.5 to 5.5	5.5 to 7.5			8.5 to 12.5		
Tie rod cylinder with brake ● Applicable switch: Proximity switch (T2□, T3□, T3P□, T2J□, T2W□, T3W□, T2Y□, T3Y□, T2YD, T1□), reed switch (T0□, T5□, T8□)								
JSG	ø32	2 to 7	6 to 9	1.5 or less	1.0 or less	6 to 11	3 or less	II-727
	ø40	2 to 7	6.5 to 9			7 to 12		
	ø50	2 to 7	7 to 10			7.5 to 12		
	ø63	2 to 7.5	7 to 10			8.5 to 13		
	ø80	2.5 to 8	7.5 to 10.5			9 to 13.5		
	ø100	2.5 to 8	8 to 11			9 to 14		

Operating range and hysteresis of each cylinder model with switch

(Unit: mm)

Model No.	Bore size (mm)	Proximity switch				Reed switch		Page
		Operating range		Hysteresis		Operating range	Hysteresis	
		1-color type	2-color type	1-color type	2-color type			
Brake cylinder	● Applicable switch: Proximity switch (T2□, T3□, T3P□, T2J□, T2W□, T3W□, T2Y□, T3Y□, T2YD, T1□), reed switch (T0□, T5□, T8□)							
JSC3 (Medium bore size)	ø40	2 to 7	3 to 10	1.5 or less	1.0 or less	5 to 12.5	3 or less	II-757
	ø50	2 to 7.5	3 to 10			5.5 to 13.5		
	ø63	2.5 to 7.5	3.5 to 10.5			5.5 to 14		
	ø80	3 to 8	4 to 11.5			6.5 to 14.5		
	ø100	3 to 8.5	4 to 11.5			6.5 to 15.5		
Brake cylinder	● Applicable switch: Strong magnetic field proof reed switch (H0□) * The values in ( ) indicate H0Y.							
JSC3-L2 (Medium bore size)	ø40	-		-		4 to 7.5(10.5 to 13.5)	3 or less	II-757
	ø50					4 to 7.5(11 to 14)		
	ø63					5 to 8(11.5 to 14.5)		
	ø80					5 to 8(10.5 to 14.5)		
	ø100					5 to 8(10.5 to 14.5)		
Brake cylinder	● Applicable switch: Proximity switch (T2□, T3□, T3P□, T2J□, T2W□, T3W□, T2Y□, T3Y□, T2YD, T1□), reed switch (T0□, T5□, T8□)							
JSC4 (Large bore size)	ø125	7.5 to 14	14 to 21	1.5 or less	1.0 or less	11 to 16	3 or less	II-757
	ø140	7.5 to 14	18 to 26			11 to 16		
	ø160	7.5 to 14	18 to 26			11 to 16		
	ø200	7.5 to 14	18 to 26			11 to 16		
Position locking compact cylinder	● Applicable switch: Proximity switch (T2□, T3□, T3P□, T2J□, T2W□, T3W□, T2Y□, T3Y□, T2YD, T1□), reed switch (T0□, T5□, T8□)							
USSD	ø20	3 to 8	4.5 to 8	1.5 or less	1.0 or less	6 to 14	3 or less	II-831
	ø25	3 to 9	4.5 to 8			5 to 14		
	ø32	3 to 8	4.5 to 8			5 to 12		
	ø40	3 to 9	5 to 8.5			6 to 14		
	ø50	3 to 9	5.5 to 9.5			6 to 14		
	ø63	3 to 9	5.5 to 9.5			7 to 15		
Free position locking flat cylinder	● Applicable switch: Proximity switch (M2□, M3□, M3P□, M2W□, M3W□), reed switch (M0□, M5□)							
UFCD	ø25	6 to 12	5 to 11	1.5 or less	1.0 or less	7 to 12	3 or less	II-875
	ø32	6 to 12	5 to 11			7 to 12		
	ø40	6 to 12	5 to 11			7 to 12		
	ø50	6 to 12	5 to 11			7 to 12		
	ø63	6 to 12	5 to 11			7 to 12		
Free position locking Medium bore size cylinder	● Applicable switch: Proximity switch (T2□, T3□, T3P□, T2J□, T2W□, T3W□, T2Y□, T3Y□, T2YD, T1□), reed switch (T0□, T5□, T8□)							
USC	ø40	2 to 7	3 to 10	1.5 or less	1.0 or less	5 to 12.5	3 or less	II-891
	ø50	2 to 7.5	3 to 10			5.5 to 13.5		
	ø63	2.5 to 7.5	3.5 to 10.5			5.5 to 14		
	ø80	3 to 8	4 to 11.5			6.5 to 14.5		
	ø100	3 to 8.5	4 to 11.5			6.5 to 15.5		
Free position locking Medium bore size cylinder	● Applicable switch: Reed switch for strong magnetic field (H0□) * The values in ( ) indicate H0Y.							
USC-L2	ø40	-		-	-	4 to 7.5(10.5 to 13.5)	3 or less	II-891
	ø50					4 to 7.5(11 to 14)		
	ø63					5 to 8(11.5 to 14.5)		
	ø80					5 to 8(10.5 to 14.5)		
	ø100					5 to 8(10.5 to 14.5)		
Guided cylinder	● Applicable switch: Proximity switch (F2□, F3□, F2Y□, F3Y□)							
STM	ø10	2.5 to 4.5	2.5 to 5.5	1.5 or less	1.5 or less	-	-	II-309
	ø16	2.5 to 4.5	2.5 to 5.5					

Operating range and hysteresis of each cylinder model with switch

(Unit: mm)

Model No.	Bore size (mm)	Proximity switch				Reed switch		Page
		Operating range		Hysteresis		Operating range	Hysteresis	
		1-color type	2-color type	1-color type	2-color type			
Guided cylinder ● Applicable switch: Proximity switch (T2□, T3□, T3P□, T2J□, T2W□, T3W□, T2Y□, T3Y□, T2YD, T1□), reed switch (T0□, T5□, T8□)								
STG	ø12	1.5 to 4.5	4 to 6	1.5 or less	1.5 or less	6 to 10	3 or less	II-329
	ø16	1.5 to 4.5	4 to 6			4 to 9		
	ø20	3 to 8	5 to 8.5			6 to 14		
	ø25	3 to 9	5 to 8.5			5 to 14		
	ø32	3 to 9	5 to 9			5 to 12		
	ø40	3 to 9	6 to 10			6 to 14		
	ø50	3 to 9	6 to 10			6 to 14		
	ø63	3 to 9	6 to 10			7 to 15		
	ø80	4 to 10	7 to 10			7 to 15		
Guided cylinder ● Applicable switch: Proximity switch (T2□, T3□, T3P□, T2J□, T2W□, T3W□, T2Y□, T3Y□, T2YD, T1□), reed switch (T0□, T5□, T8□)								
STS/L	ø8	1.5 to 3.5	4 to 6	1.5 or less	1.5 or less	5 to 9	3 or less	II-437
	ø12	1.5 to 4.5	4 to 6			6 to 10		
	ø16	1.5 to 4.5	4 to 6			4 to 9		
	ø20	3 to 8	5 to 8.5			6 to 14		
	ø25	3 to 9	5 to 8.5			5 to 14		
	ø32	3 to 8	5 to 9			5 to 12		
	ø40	3 to 9	6 to 10			6 to 14		
	ø50	3 to 9	6 to 10			6 to 14		
	ø63	3 to 9	6 to 10			7 to 15		
	ø80	4 to 10	7 to 10			7 to 15		
	ø100	2 to 9	7 to 10			7 to 15		
Linear slide cylinder ● Applicable switch: Proximity switch (F2□, F3□, F2Y□, F3Y□)								
LCW	ø12	3.5 to 6.5	4.5 to 6.5	1.0 or less	1.0 or less	-	-	II-5
Linear slide cylinder ● Applicable switch: Proximity switch (T2□, T3□, T2W□, T3W□), reed switch (T0□, T5□)								
LCW	ø16	3 to 5	4 to 5.5	1.0 or less	1.0 or less	6.5 to 9.5	3.0 or less	II-5
	ø20	4.5 to 6.5	5.5 to 6.5			8 to 12		
Linear slide cylinder ● Applicable switch: Proximity switch (F2□, F3□, F2Y□, F3Y□)								
LCR	ø6	2 to 4	2.5 to 5.5	1.0 or less	1.0 or less	-	-	II-55
	ø8		3.5 to 6					
	ø12		3 to 4.5					
Linear slide cylinder ● Applicable switch: Proximity switch (T2□, T3□, T2W□, T3W□), reed switch (T0□, T5□)								
LCR	ø16	2 to 4	3 to 4.5	1.0 or less	1.0 or less	5 to 9	1.0 or less	II-55
	ø20	2 to 5.5	4 to 5.5			6.5 to 11		
	ø25	2.5 to 6	3.5 to 6			8 to 12		
Linear slide cylinder ● Applicable switch: Proximity switch (F2□, F3□, F2Y□, F3Y□)								
LCG	ø6	2 to 4	2.5 to 5.5	1.0 or less	1.0 or less	-	-	II-137
	ø8		3.5 to 6					
	ø12		3 to 4.5					
Linear slide cylinder ● Applicable switch: Proximity switch (T2□, T3□, T2W□, T3W□), reed switch (T0□, T5□)								
LCG	ø16	2 to 4	3 to 4.5	1.0 or less	1.0 or less	5 to 9	1.0 or less	II-137
	ø20	2 to 5.5	4 to 5.5			6.5 to 11		
	ø25	2.5 to 6	3.5 to 6			8 to 12		
Linear slide cylinder ● Applicable switch: Proximity switch (T2□, T3□, T2W□, T3W□), reed switch (T0□, T5□)								
LCX	ø25	0.5 to 6	1.0 to 5.5	2 or less	2 or less	2 to 10.5	3.5 or less	II-201
	ø32	1.0 to 5.5	0.5 to 5.0			1 to 11		

Operating range and hysteresis of each cylinder model with switch

(Unit: mm)

Model No.	Bore size (mm)	Proximity switch				Reed switch		Page
		Operating range		Hysteresis		Operating range	Hysteresis	
		1-color type	2-color type	1-color type	2-color type			
Linear slide cylinder ● Applicable switch: Proximity switch (F2□, F3□, F2Y□, F3Y□)								
LCM	ø4.5	1 to 3	2 to 4	1.0 or less	1.0 or less	-	-	II-261
	ø6							
	ø8							
Twin rod cylinder ● Applicable switch: Proximity switch (K2□, K3□, K3P□, K2Y□, K3Y□), reed switch (K0□, K5□)								
STR2	ø6	1 to 6	4 to 7.5	2.0 or less	1.5 or less	4 to 9(STR2-M)	3.0 or less	II-567
	ø10	1 to 5.5	4 to 7.5			4 to 9(STR2-M)		
	ø16	1.5 to 7.5	4.5 to 9			5 to 12.5		
	ø20	3 to 9	5.5 to 10			6.5 to 14.5		
	ø25	3.5 to 10.5	6.5 to 10.5			8 to 14.5		
	ø32	-	-			-		
Unit cylinder ● Applicable switch: Proximity switch (T2□, T3□), reed switch (T0□, T5□)								
UCA2-*L	ø10	1.5 to 4	-	1.5 or less	-	4.5 to 8	3.0 or less	II-625
	ø16							
	ø25							
	ø32							
Hi energy absorption cylinder ● Applicable switch: Proximity switch (T2□, T3□, T3P□, T2J□, T2W□, T3W□, T2Y□, T3Y□, T2YD, T1□), reed switch (T0□, T5□, T8□)								
HCM	ø20	3 to 8	4.5 to 9	1.5 or less	1.0 or less	6 to 14	3 or less	I-941
	ø25	3 to 9	5 to 9			5 to 14		
	ø32	3 to 8	5 to 9			5 to 12		
	ø40	3 to 9	5.5 to 9.5			6 to 14		
	ø50	3 to 9	6 to 10			6 to 14		
	ø63	3 to 9	6 to 10.5			7 to 15		
High speed cylinder ● Applicable switch: Proximity switch (R1, R2, R3, R2Y, R3Y), reed switch (R0, R4, R5, R6)								
HCA	ø20	6 to 14	11 to 18	1.5 or less	1.0 or less	7 to 14	3.0 or less	I-959
	ø25	6 to 14	11 to 18			8 to 13		
	ø32	6 to 14	11 to 18			9 to 14		
	ø50	6 to 14	11 to 18			9 to 14		
Rodless cylinder ● Applicable switch: Proximity switch (M2□, M3□, M3P□, M2WV, M3WV), reed switch (M0□, M5□)								
SRL3	ø12	4 to 13	4 to 12	1.5 or less	1.0 or less	3 to 11	3.0 or less	I-1551
	ø16	4 to 13	4 to 12	1.5 or less	1.0 or less	3 to 11		
	ø20	4 to 13	4 to 12	1.5 or less	1.0 or less	3 to 11		
	ø25	9.5 to 15.5	9 to 14	2.0 or less	1.5 or less	8.5 to 13.5	3.5 or less	
	ø32	7.5 to 15	8 to 14	2.0 or less	1.5 or less	7 to 13.5		
	ø40	11.5 to 17.5	10 to 16.5	2.0 or less	1.5 or less	10 to 16		
	ø50	11 to 24	17 to 27	2.5 or less	1.5 or less	17 to 27	3.0 or less	
	ø63	11 to 24	17 to 27	2.5 or less	1.5 or less	17 to 27		
	ø80	26.5 to 45.5	16.5 to 40	5.0 or less	3.0 or less	20.5 to 41		
	ø100	25.5 to 40.5	21.5 to 36	3.0 or less	2.5 or less	24 to 37		
Rodless cylinder ● Applicable switch: Proximity switch (T2W□, T3W□, T2YD)								
SRL3	ø12	-	2 to 7	-	1.0 or less	-	-	I-1551
	ø16	-	2 to 7					
	ø20	-	3 to 8	-	1.5 or less			
	ø25	-	3 to 10					
	ø32	-	3 to 10					
	ø40	-	4 to 11					
	ø50	-	9 to 16					
	ø63	-	9 to 16					
	ø80	-	10 to 24	-	2.0 or less			
	ø100	-	10 to 24					

Operating range and hysteresis of each cylinder model with switch

(Unit: mm)

Model No.	Bore size (mm)	Proximity switch				Reed switch		Page
		Operating range		Hysteresis		Operating range	Hysteresis	
		1-color type	2-color type	1-color type	2-color type			
High precision guided rodless cylinder	● Applicable switch: Proximity switch (M2□, M3□, M3P□, M2WV, M3WV), reed switch (M0□, M5□)							
SRG3	ø12	4 to 13	4 to 12	1.5 or less	1.0 or less	3 to 11	3.0 or less	I-1627
	ø16	4 to 13	4 to 12			3 to 11		
	ø20	9.5 to 15.5	9 to 14	2.0 or less	1.5 or less	3 to 11		
	ø25	9.5 to 15.5	9 to 14			8.5 to 13.5	3.5 or less	
High precision guided rodless cylinder	● Applicable switch: Proximity switch (T2W□, T3W□, T2YD)							
SRG3	ø12	-	2 to 7	-	1.0 or less	-	-	I-1627
	ø16	-	2 to 7					
	ø20	-	3 to 8	-	1.5 or less			
	ø25	-	3 to 10					
High precision guided rodless cylinder	● Applicable switch: Proximity switch (T2Y□, T3Y□, T2W□, T3W□, T2YD), reed switch (T0□, T5□, T8□)							
SRM3	ø25	-	6 to 9	-	1.0 or less	5.5 to 11	2.0 or less	I-1655
	ø32	-	6.5 to 9			5.5 to 10		
	ø40	-	7.5 to 10.5			5.5 to 9		
	ø63	-	8 to 11			5.5 to 10		
Rodless cylinder with brake	● Applicable switch: Proximity switch (M2□, M3□, M3P□, M2WV, M3WV), reed switch (M0□, M5□)							
SRT3	ø12	4 to 13	4 to 12	1.5 or less	1.0 or less	3 to 11	3.0 or less	I-1685
	ø16	4 to 13	4 to 12			3 to 11		
	ø20	4 to 13	4 to 12			3 to 11		
	ø25	9.5 to 15.5	9 to 14	2.0 or less	1.5 or less	8.5 to 13.5	3.5 or less	
	ø32	7.5 to 15	8 to 14			7 to 13.5		
	ø40	11.5 to 17.5	10 to 16.5			10 to 16		
	ø50	16.5 to 24	14 to 21			14.5 to 21.5		
	ø63	16 to 24	14 to 21			14 to 21.5		
Rodless cylinder	● Applicable switch: Proximity switch (T2W□, T3W□, T2YD)							
SRT3	ø12	-	2 to 7	-	1.0 or less	-	-	I-1685
	ø16	-	2 to 7					
	ø20	-	3 to 8	-	1.5 or less			
	ø25	-	3 to 10					
	ø32	-	3 to 10					
	ø40	-	4 to 11					
	ø50	-	9 to 16					
	ø63	-	9 to 16					
Magnet rodless cylinder	● Applicable switch: Proximity switch (T2□, T3□, T3P□, T2W□, T3W□, T2Y□, T3Y□, T1□)							
MRL2	ø6	2 to 5	5.5 to 6.5	1.0 or less	1.0 or less	-	-	I-1713
	ø10	2.5 to 5.5	6 to 7.5					
	ø16	2 to 5	5.5 to 7					
	ø20	2 to 5	6 to 5.5					
	ø25	2 to 5	6 to 5.5					
	ø32	2 to 4.5	5.5 to 6.5					
Magnet rodless cylinder with high precision guide	● Applicable switch: Proximity switch (T2□, T3□, T3P□, T2W□, T3W□,T2Y□, T3Y□, T1□), reed switch (T0□, T5□)							
MRG2	ø10	2 to 4.5	5.5 to 7	0.5 or less	0.5 or less	6.5 to 7.5	1 or less	I-1745
	ø16	2 to 5	6 to 7.5			7 to 8	2 or less	
	ø25	2 to 5	6 to 7			7.5 to 8	2 or less	

Operating range and hysteresis of each cylinder model with switch

(Unit: mm)

Model No.	Bore size (mm)	Proximity switch				Reed switch		Page
		Operating range		Hysteresis		Operating range	Hysteresis	
		1-color type	2-color type	1-color type	2-color type			
Clamp cylinder ● Applicable switch: Proximity switch (T2□, T3□, T3P□, T2J□, T2W□, T3W□, T2Y□, T3Y□, T2YD, T1□), reed switch (T0□, T5□, T8□)								
CAC4	ø40	2 to 6.5	5.7 to 6.5	1.5 or less	1.0 or less	6.7 to 10.8	3 or less	II-989
	ø50	2.5 to 6.0	5.9 to 6.8			7.8 to 11.3		
	ø63	2.5 to 6	6.1 to 6.8			8.2 to 11.4		
	ø80	3 to 7	7.7 to 8.5			9 to 10.9		
Clamp cylinder ● Applicable switch: Reed switch for strong magnetic field (H0□)								
CAC4-L2	ø40	-		-	-	6.7 to 10.8	3 or less	II-989
	ø50					7.8 to 11.3		
	ø63					8.2 to 11.4		
	ø80					6.6 to 7.5		
Clamp cylinder ● Applicable switch: Proximity switch (T2□, T3□, T3P□, T2J□, T2W□, T3W□, T2Y□, T3Y□, T2YD, T1□), reed switch (T0□, T5□, T8□)								
UCAC2	ø50	2.5 to 6.0	5.9 to 6.8	1.5 or less	1.0 or less	7.8 to 11.3	3 or less	II-1013
	ø63	2.5 to 6.5	6.1 to 6.8			8.2 to 11.4		
Clamp cylinder ● Applicable switch: Reed switch for strong magnetic field (H0□)								
UCAC2-L2	ø50	-		-	-	7.8 to 11.3	3 or less	II-1013
	ø63					8.2 to 11.4		
Lightweight clamp cylinder ● Applicable switch: Proximity switch (T2□, T3□, T3P□, T2J□, T2Y□, T3Y□, T2YD, T1□), reed switch (T0□, T5□, T8□)								
CAC	ø32	2.5 to 6	3.5 to 8	1.5 or less	1.0 or less	6.5 to 11.5	3 or less	II-1027
	ø40	3 to 7	4 to 9			7.5 to 13.5		
Position locking, lightweight clamp cylinder ● Applicable switch: Proximity switch (T2□, T3□, T3P□, T2J□, T2Y□, T3Y□, T2YD, T1□), reed switch (T0□, T5□, T8□)								
UCAC	ø32	2.5 to 6	3.5 to 8	1.5 or less	1.0 or less	6.5 to 11.5	3 or less	II-1027
	ø40	3 to 7	4 to 9			7.5 to 13.5		
Rotary clamp cylinder ● Applicable switch: Proximity switch (T2□, T3□, T3P□, T2J□, T2Y□, T3Y□, T2YD, T1□), reed switch (T0□, T5□, T8□)								
RCS2	ø12	1.5 to 5.5	3 to 6	1.5 or less	1.0 or less	5 to 8	3 or less	
	ø16	1.5 to 4.5	3 to 7			4 to 9		
	ø20	3 to 8	4.5 to 8			6 to 14		
	ø25	3 to 9	4.5 to 8			5 to 14		
	ø32	3 to 8	4.5 to 8			5 to 12		
	ø40	3 to 9	5 to 8.5			6 to 14		
	ø50	3 to 9	5.5 to 9.5			6 to 14		
	ø63	3 to 9	5.5 to 9.5			7 to 15		
Rotary clamp cylinder ● Applicable switch: Proximity switch (T2□, T3□, T3P□, T2W□, T3W□, T2Y□, T3Y□, T2YD), reed switch (T0□, T5□)								
RCC2	ø16	2 to 5	3 to 7	1.5 or less	1.0 or less	4 to 9	3 or less	II-1047
	ø20	3 to 8	4.5 to 8			6 to 14		
	ø25	3 to 9	4.5 to 8			5 to 14		
	ø32	3 to 8	4.5 to 8			5 to 12		
	ø40	3 to 9	5 to 8.5			6 to 14		
	ø50	3 to 9	5.5 to 9.5			6 to 14		
	ø63	3 to 9	5.5 to 9.5			7 to 15		
Rotary clamp cylinder ● Applicable switch: Proximity switch (T2□, T3□, T2W□, T3W□), reed switch (T0□, T5□)								
RCS	ø16	2 to 5	3 to 7	1.5 or less	1.0 or less	4 to 9	3 or less	II-1069

Operating range and hysteresis of each cylinder model with switch

Model No.	Bore size (mm)	Proximity switch				Reed switch		Page
		Operating range		Hysteresis		Operating range	Hysteresis	
		1-color type	2-color type	1-color type	2-color type			
High power cylinder ● Applicable switch: Proximity switch (R1, R2, R3, R2Y, R3Y), reed switch (R0, R4, R5, R6)								
SHC	ø40	6.5 to 11.5		1.5 or less		9.5 to 12.5	3.0 or less	II-1095
	ø50	8 to 12.5				10.5 to 14.5		
	ø63	7.5 to 12.5				10.5 to 14.5		
	ø80	8 to 13.5				11.5 to 15.5		
	ø100	8 to 14				12 to 16		
High power cylinder ● Applicable switch: Reed switch (H0)								
SHC-L2	ø40	-		-		4 to 7	3.0 or less	II-1095
	ø50					5 to 7.5		
	ø63					5 to 8		
	ø80					5 to 8		
	ø100					5 to 8		
Mechanical power cylinder ● Applicable switch: Proximity switch (T2□, T3□, T3P□, T2J□, T2W□, T3W□, T2Y□, T3Y□, T1□), reed switch (T0□, T5□, T8□)								
MCP-S	2t	4 to 10	6 to 10	1.5 or less	1.0 or less	7 to 15	3 or less	II-1033
	5t	4 to 10	8 to 10			9 to 15		
MCP-W (rapid feed part)	2t	3.5 to 6.0	4.6 to 9.2	1.5 or less	1.0 or less	7.6 to 12.8	3 or less	
	5t	4.0 to 8	5.5 to 11.9			8.9 to 14.1		
Guideless cylinder ● Applicable switch: Proximity switch (R1, R2, R3, R2Y, R3Y), reed switch (R0, R4, R5, R6)								
GLC	ø40	7 to 17		1.5 or less		11.5 to 16.5	3.0 or less	II-1151
	ø50	9 to 17				13 to 18		
	ø63	10 to 18				15 to 20		
	ø80	8 to 19				15 to 20		
	ø100	11 to 20.5				13.5 to 19		
Guideless cylinder ● Applicable switch: Reed switch (H0)								
GLC-L2	ø40	-		-		4 to 9	3.0 or less	II-1151
	ø50					4 to 9		
	ø63					4 to 10		
	ø80					5 to 11		
	ø100					5 to 11		
Rotary actuator ● Applicable switch: Proximity switch (T2□, T3□, T2W□, T3W□, T2Y□, T3Y□, T1□), reed switch (T0□, T5□, T8□)								
RRC	8	15° to 60°	20° to 70°	-	-	70° to 90°	-	II-1241
	32	10° to 30°	10° to 30°			30° to 40°		
	63	10° to 30°	10° to 30°			30° to 40°		
Table rotary actuator ● Applicable switch: Proximity switch (T2□, T3□, T2W□, T3W□, T2Y□, T3Y□, T1□)								
GRC	5	10° to 35°	30° to 40°	-	-	-	-	II-1255
	10	5° to 30°	20° to 30°					
	20	10° to 35°	25° to 35°					
	30	5° to 25°	15° to 25°					
	50	5° to 25°	15° to 25°					
	80	5° to 25°	15° to 25°					
Compact rotary actuator ● Applicable switch: Proximity switch (SR-□)								
RV3*	3	15°±7°	-	3° or less	-	-	-	II-1293
	10	15°±7°	-					
	20	15°±7°	-					
	30	15°±7°	-					
Compact rotary actuator ● Applicable switch: Proximity switch (FR-□)								
RV3*	3	23°±7°	-	2° or less	-	-	-	II-1293
	10	23°±7°	-					
	20	23°±7°	-					
	30	23°±7°	-					
Large rotary actuator ● Applicable switch: Proximity switch (M2V, M3V, M3PV), reed switch (M0V, M5V)								
RV3*	50	Approx. 40°	-		-	Approx. 25°	-	II-1293
	150	Approx. 25°	-			Approx. 15°		
	300	Approx. 25°	-			Approx. 15°		
	800	Approx. 25°	-			Approx. 15°		

⚠CAUTION Relocation of switch

Tie rod mounting

Loosening the two set screws for fixing the mounting base by 1/2 to 3/4 turns allows you to move the switch axially without fallout.
After adjustment, lightly press the holder so that the switch contacts the tube, and tighten the set screw.
Tightening torque is 1.7 to 2.0 N·m. It is tightened enough if the Allen wrench begins to bend.

● Movement and tightening diagram

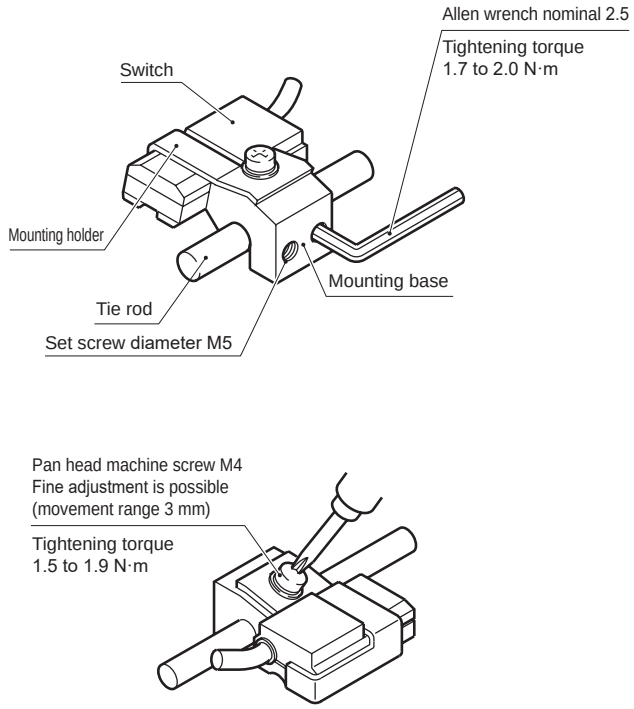

Band mounting

(1) When moving the switch position to the stroke direction

● The 1-color LED switch can be fine-tuned by ±3 mm from the default. If the adjusting range exceeds ±3 mm, or when fine-tuning the 2-color LED switch, move the band position.

● The switch bracket rail has a marking 4 mm from the rail end. Use as a guide to the mounting position when replacing the switch. Switch rail markings are set to the default switch max. sensitivity position. The max. sensitivity position will change when the switch is changed or when the band is moved. Adjust the position accordingly in this case.

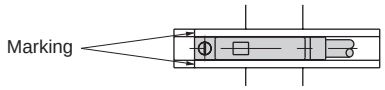

(2) When moving the switch position to the circumferential direction

● Loosen the band fixing screw, shift the switch rail in the circumferential direction, then tighten at the specified position. Tightening torque is 0.8 to 1.0 N·m.

(3) Shifting the band position

● Loosen the band fixing screw, shift the switch rail and band along the cylinder tube, and tighten at the specified position. Tightening torque is 0.8 to 1.0 N·m.

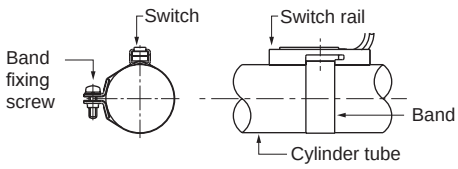

Band mounting

Loosen the fixing screw (pan head machine screw), move the body and band along the cylinder tube, and tighten the screw at the specified position. For fine adjustment, fix the band position and move only the switch body. Tightening torque is 0.5 to 0.7N·m.
Tightening torque for HCA ø80 and ø100 is 1.0 to 1.5 N·m.

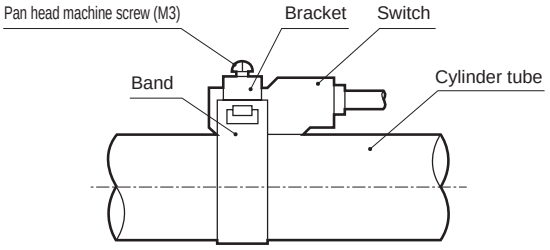

Switch groove mounting

Loosen the fixing screw (set screw), move the switch body along the switch groove, and tighten the screw at the specified position.
When using T2, T2W, T3, T3W, T0, T5, K2, K3, K0 or K5, use a flathead screwdriver (clockwork screwdriver, precision screwdriver, etc.) with a 5 to 6 mm grip diameter, a 2.4 mm or smaller tip and thickness 0.3 mm or less to tighten the screws with a tightening torque of 0.1 to 0.2 N·m.
When using T*C, T2J, T2Y, T3Y, K2Y, K3Y, T2YD, T1, T8, T2YL, T3YL or ET0, tighten with a tightening torque of 0.5 to 0.7 N·m.
When using F2*, F3*, F2Y* or F3Y*, tighten with a tightening torque of 0.03 to 0.08 N·m.

T2YD Tie rod mounting

(1) Fine adjustment

Loosen the slotted hex socket bolt Ⓐ, move only the switch body, and fix at the required position. Tightening torque is 0.5 to 0.7 N·m.

(2) Rough adjustment

Completely loosen the slotted bolt Ⓐ and set screws, and move the entire mounting bracket to the required position. Tighten the slotted bolt Ⓐ. Tightening torque is 0.5 to 0.7 N·m.
Then tighten the set screw. Tightening torque is 1.7 to 2.0 N·m.

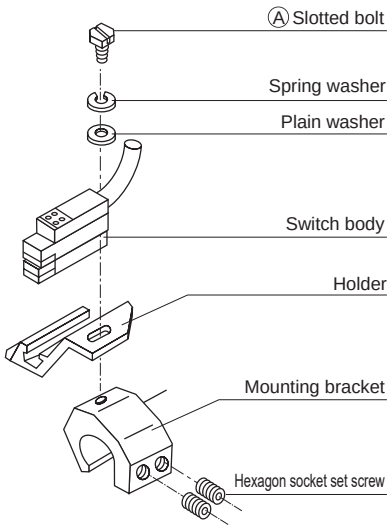

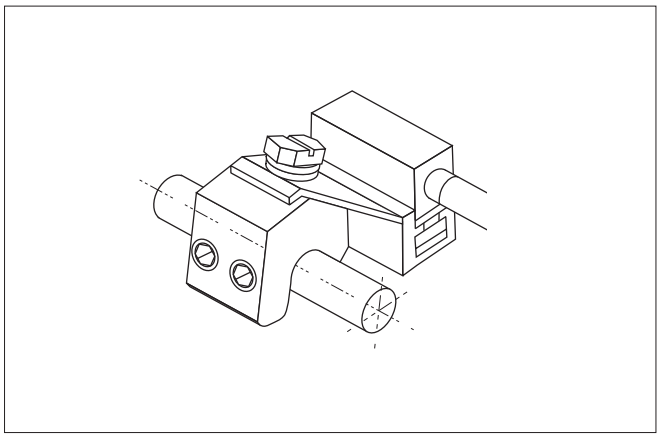

⚠ Notes for contact protection circuits (SKAC and SKDC)

If a reed switch is used and load falls under any of the following conditions, the contact may be kept on and the service life may become shorter. To prevent that, connect a contact protection circuit within 2 m from the switch.

- When the work load is an inductive load (relay, valve, etc., (coil-drive load)) or capacitance load (programmable controller, etc., (load including capacitor))
- When the lead wire lengths are as follows
  - 12 VDC : 100 m or more
  - 24 VDC : 50 m or more
  - 100 VAC : 20 m or more
  - 200 VAC : 10 m or more
- When overvoltage or overcurrent may occur due to other causes

For details on contact protection circuits, refer to Ending Page 27.

How to install the product to R*B terminal box

See the figure below and follow the following procedure to connect with the R*B terminal box.

(1) Remove the fixing screw completely and pull out the terminal box from the switch.
(2) Push out the pin support from the top of the case to separate the case and pin support.
(3) Remove the cap and take out the washer and gasket.
(4) Determine the direction to draw the lead wire from the terminal box.
(5) Refer to the top view of the case mounting orientation, and cut the lead wire based on the lead-out direction. Then strip the seal/sheath.
(6) Crimp the included terminal.
(7) Pass the lead wire through in the sequence of cap, washer, gasket, and case with attention to the orientation. Insert the lead wire into the case and pull it out with needle-nose pliers.
(8) Insert the terminal into the pin support and at the same time, push them into the case making sure of their direction. Push them until the upper end rib of the pin support comes out of the top of the case.
(9) Insert the fixing screw into the case and pin support.
(10) Insert the gasket and washer into the case and fix them by tightening the cap.
(11) Set the case to the switch terminal and fix it with the fixing screw.

● Lead cutting length

The lead cutting length differs with the case mounting orientation. Refer to the following table.

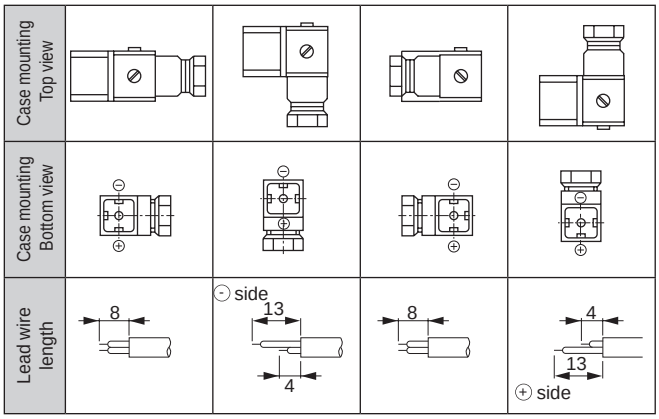

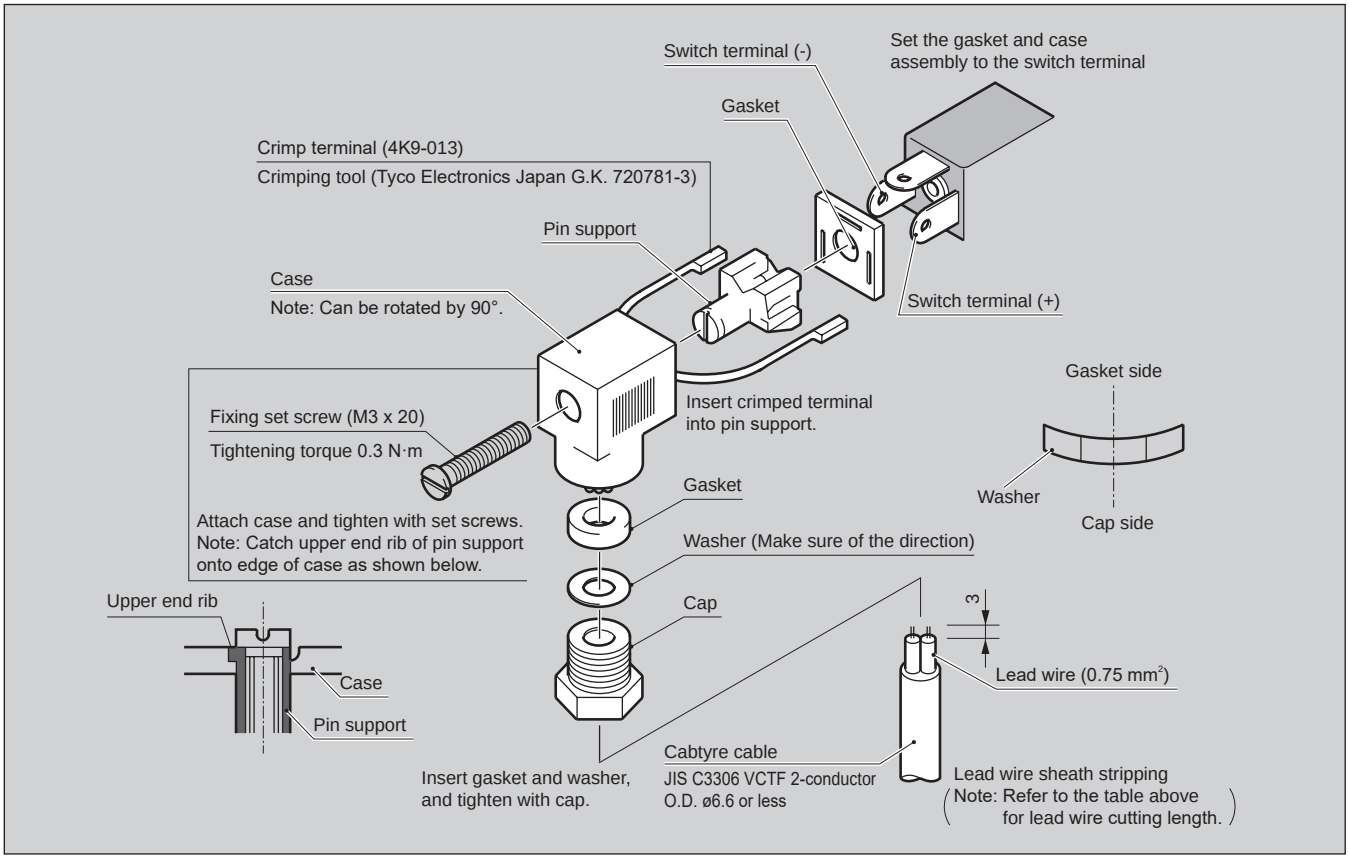

How to install the product to E0 terminal box

Prepare a heat-resistant cabtyre cable and flexible tube, and wire to the terminal box with reference to the figure below. The MAS insert, MAS holder, and cap nut are included as accessories.

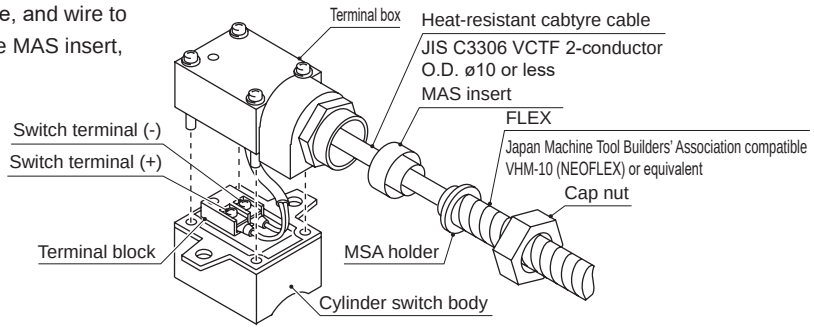

When selecting a cylinder switch, first, check whether reed or proximity switch is used, then follow the selection chart below.

Cylinder switch selection chart

Applicable switches

Reed

1 Applications

2 Working voltage

3 Load current

4 Indicator

5 How to wire

6 Lead wire length

Proximity

1 Applications

2 Working voltage

3 Load current

4 2-wire/3-wire

5 2-color LED

6 How to wire

7 Lead wire length

Applicable switches

Applications

Programmable controller
IC circuit
Relay
Small solenoid valve

Working voltage

5 VDC, 12 VDC, 24 VDC
100 VAC, 200 VAC

Load current

5 to 200 mA

2-wire/3-wire (proximity only)

2-wire: Wiring work-hours can be reduced drastically.
3-wire: No current leakage, small internal voltage drop, wide applications and large load current

Indicator (reed only)

With indicator lamp { Lit when ON / Lit when OFF
No indicator lamp

2-color LED

2-color LED: Color indicator instantaneously shows the ideal installation position, enabling instant installation.

How to wire

Grommet lead wire: Standard
With terminal box connector: Easy maintenance.

Lead wire length

1 m: Standard
3 m
5 m

Troubleshooting [Cylinder switch] (1)

Trouble	Cause	Factor
The switch remains ON and output does not stop * Load · Programmable controller · Relay · Others	Load was short-circuited.	Internal circuit damage of switch
	A load current exceeding catalog value was conducted	
	A load voltage or power supply voltage exceeding catalog values was applied	
	The connection is incorrect	Malfunction caused by miswiring
		Internal circuit damage caused by mis-wiring (AC, DC, polarity, etc.)
	Long wire length (refer to Intro Page 80 of the catalog)	Internal circuit damage of switch
	Surge voltage is generated due to connection of an inductive load (relay, solenoid valve)	Internal circuit damage of switch
	With the proximity switch, a servomotor, or robot, etc., may be generating noise within the same equipment	Noise is applied
	The power and signal cables are wired together	
	The same power supply as the noise source is used	
	The cylinder switch installation position does not match the piston stop position	The position is adjusted incorrectly
		The installation position has deviated due to a loose screw
		The mounting orientation is in reverse
	The ambient temperature is -10°C or less	The magnetic force of the piston magnet in the cylinder has increased
	Water or oil, etc., comes in contact with the cylinder switch	Water or oil entered the cylinder switch and damaged the internal circuit
	Water or oil enters the relay box of the lead wire and comes in contact with the terminal of the load	Malfunction caused by entry of water or oil
	A magnetic field is generated in the area · Spot welding machine · Magnetizer, etc.	Cylinder switch is reacting to an external magnetic field
	There is a magnetic substance in the area	There is an iron bolt nearby
		There is a magnetic substance near the cylinder switch
		Iron chips accumulated around the cylinder switch
	External force was applied to the cylinder switch	Internal circuit damage of switch

Countermeasures
(1) Replace the cylinder switch and select a cylinder switch with maximum rating matching the load rating
(1) Connect correctly
(1) Replace the cylinder switch and connect correctly
(1) Replace the cylinder switch and wire the protective circuit (Refer to Intro Pages 80 and 82)
(1) Replace the cylinder switch and wire the protective circuit (Refer to Intro Pages 80 and 82)
(1) Add a noise filter or replace with a reed switch
(2) Separate the power cable and signal cable
(3) Separate the power source
(1) Adjust the position again
(1) Tighten within the specified tightening torque range
(1) Mount in the correct direction
(1) Raise the ambient temperature to -10°C or higher
(1) Change from standard cylinder switch to T□YL of coolant proof specifications (T-switch only)
(2) Replace the cylinder switch, and provide a partition so that water and oil do not make excessive contact.
(1) Set a partition so water and oil do not come in contact with the relay box, or place the relay box in a waterproof box
(1) Change to a strong magnetic field proof switch. The cylinder body must also be changed to one for strong magnetic fields
(2) Check that magnetic fields are not applied a. Move the magnetic field generator away. b. Set a magnetic material partition between the magnetic field origin and cylinder switch
(3) Provide magnetic shield
(1) Replace with a stainless steel bolt
(2) Mount the cylinder switch on a surface distanced from the iron bolt
(1) Separate the cylinder switch from the magnetic substance to the value recommended in the catalog
(2) Mount the cylinder switch on a surface distanced from the magnetic substance
(3) Change the magnetic substance's material to a nonmagnetic material such as stainless steel, aluminum, copper, etc.
(1) Remove iron chips
(1) Replace the cylinder switch and check that external force is not applied to the cylinder switch

Troubleshooting [Cylinder switch] (2)

Trouble	Cause	Factor
The cylinder switch turns ON/OFF but the load remains ON	The relation of the cylinder switch leakage current and load input specifications is Leakage current > OFF current	The load reacts to the leakage current.
		Leakage current increases because of the parallel connection (Refer to Intro Page 81 of the catalog)
The output correctly turns ON/OFF but the indicator lamp does not turn on	The wiring poles are reversed (only when using reed □0 with DC).	Malfunction caused by miswiring

Countermeasures
(1) Change the cylinder switch from □2 to □0 or □3 type
(2) Change the cylinder switch to one with a large load OFF current value
(3) Wire the bleeder resistance

* Select a programmable controller or relay, etc., that does not malfunction due to proximity switch leakage current.
* For the load input specifications, check the model No. and contact the manufacturer or CKD.

(1) Wire normally

Troubleshooting [Cylinder switch] (3)

Trouble	Cause	Factor
Cylinder switch does not turn ON There is no output Load does not react	The applied voltage is incorrect	Internal circuit damage of switch
	Load was short-circuited	Internal circuit damage of switch
	A load current exceeding catalog value was conducted	
	A load voltage or power supply voltage exceeding catalog values was applied	
	The connection is incorrect	The switch is not operational due to miswiring
		Internal circuit damage caused by mis-wiring (AC, DC, polarity, etc.)
	Excessive bending is applied to the lead wire	Disconnection of lead wire
	Excessive tension is applied to the lead wire	Disconnection of lead wire
	Long wire length (refer to Intro Page 80 of the catalog)	Internal circuit damage of switch
	Surge voltage is generated due to connection of an inductive load (relay, valve)	Internal circuit damage of switch
	With the proximity switch, a servomotor, or robot, etc., may be generating noise within the same equipment	Noise is applied
	The power and signal cables are wired together	
	The same power supply as the noise source is used	
	The cylinder switch installation position does not match the piston stop position	The position is adjusted incorrectly
		The installation position has deviated due to a loose screw
		The mounting orientation is in reverse
	The ambient temperature exceeds 60°C	The magnetic force of the piston magnet in the cylinder has weakened
	Water or oil, etc., comes in contact with the cylinder switch	Water or oil entered the cylinder switch and damaged the internal circuit
	Water or oil enters the relay box of the lead wire and comes in contact with the terminal of the load	Internal circuit abnormality caused by entry of water or oil
	A magnetic field is generated in the area · Spot welding machine · Magnetizer, etc.	Cylinder switch does not react due to the effect of peripheral magnetic fields
	There is a magnetic substance in the area	There is an iron bolt nearby
		There is a magnetic substance near the cylinder switch
		Iron chips accumulated around the cylinder switch
	External force was applied to the cylinder switch	Internal circuit damage of switch

* Load
· Programmable controller
· Relay
· Others

Countermeasures
(1) Replace the cylinder switch and set the correct rated voltage
(2) Replace with a cylinder switch in correct rated voltage
(1) Replace the cylinder switch and select a cylinder switch with maximum rating matching the load rating
(1) Connect correctly
(1) Replace the cylinder switch and connect correctly
(1) Replace the cylinder switch and provide a sufficient bending radius (9 mm or over) for the lead wire so that one location is not subject to excessive bending
(2) Change the cylinder switch to T2□R type with elasticity specifications (T-switch only)
(1) Replace the cylinder switch, and take measures to prevent excessive tension from being applied
(1) Replace the cylinder switch and wire the protective circuit (Refer to Intro Pages 80 and 82)
(1) Replace the cylinder switch and wire the protective circuit (Refer to Intro Pages 80 and 82)
(1) Add a noise filter or replace with a reed switch
(2) Separate the power cable and signal cable
(3) Separate the power source
(1) Adjust the position again
(1) Tighten within the specified tightening torque range
(1) Mount in the correct direction
(1) Lower the ambient temperature to 60°C or less
(2) Replace with a heat-resistant cylinder switch (Refer to the catalog for compatible models)
(1) Change from standard cylinder switch to T□YL of coolant proof specifications (T-switch only)
(2) Replace the cylinder switch, and provide a partition so that water and oil do not make excessive contact
(1) Set a partition so water and oil do not come in contact with the relay box, or place the relay box in a waterproof box
(1) Change to a strong magnetic field proof switch. The cylinder body must also be changed to one for strong magnetic fields
(2) Check that magnetic fields are not applied a. Move the magnetic field generator away. b. Set a magnetic material partition between the magnetic field origin and cylinder switch
(3) Provide magnetic shield
(1) Replace with a stainless steel bolt
(2) Mount the cylinder switch on a surface distanced from the iron bolt
(1) Separate the cylinder switch from the magnetic substance to the value recommended in the catalog
(2) Mount the cylinder switch on a surface distanced from the magnetic substance
(3) Change the magnetic substance's material to a nonmagnetic material such as stainless steel, aluminum, copper, etc.
(1) Remove iron chips
(1) Replace the cylinder switch and check that external force is not applied to the cylinder switch

Troubleshooting [Cylinder switch] (4)

Trouble	Cause	Factor
The cylinder switch indicator lamp turns ON but the load does not operate	The relation of the cylinder switch voltage drop and load input specifications is: (power supply voltage - internal voltage drop) < min. working voltage	The load and cylinder switch do not match
		Internal voltage drop caused by serial connection (Refer to Intro Page 81)
	When using 3-wire, the programmable controller (PLC) input specifications (source input, sink input) do not match	The cylinder switch's signals are not received
	Cylinder switch output is set to the middle of the air cylinder stroke	The cylinder speed is fast and the load does not react

Countermeasures
(1) Replace the cylinder switch with a model with small internal voltage drop □2 type → □0 type → □3 type → □5 type
(2) Replace the load with one with smaller min. working voltage

(1) Source input ---- Select NPN output □3 type (NPN output is standard)
(2) Sink input -------- Select PNP output □3P type (T, K, M or F-switch only)
(3) Change the cylinder switch to 2-wire

(1) Change to T2J with OFF delay specifications (T-switch only)
(2) Connect several cylinder switches in parallel to increase the operating range.
(3) Connect a sensor controller, etc., between the cylinder switch and load, and change to a signal time that matches load performance. Example: OMRON S3D2
(4) Decrease cylinder speed

Technical data

	Page
Theoretical thrust table (1 to 6)	Ending 56
Cylinder bore size selection nomogram (7/8)	Ending 63
Required flow rate of cylinder during operation (9/10)	Ending 65
Allowable absorbed energy value (11/12)	Ending 67
Relation values between mounting dimensions and max. stroke (L) (13/14)	Ending 69
How to determine cylinder mounting (15)	Ending 71
Air compressor and air tank selection (16)	Ending 72
Commonly used dimension tolerance (17)	Ending 73
International System of Units (SI units)	Ending 74

Theoretical thrust table (double acting)

(Unit: N)

Push ←
Pull →

Bore size (mm)	Compatible models	Operating direction	Working pressure MPa											
			0.05	0.1	0.15	0.2	0.3	0.4	0.5	0.6	0.7	0.8	0.9	1.0
ø4	MDC2	Push	-	-	-	2.51	3.77	5.03	6.28	7.54	8.80	-	-	-
		Pull	-	-	-	1.88	2.83	3.77	4.71	5.65	6.60	-	-	-
ø4.5	LCM	Push	-	-	-	3.18	4.77	6.36	7.95	9.54	11.1	-	-	-
		Pull	-	-	-	2.55	3.83	5.11	6.38	7.66	8.93	-	-	-
ø6	SCPD3	Push	-	-	-	5.65	8.48	11.3	14.1	17.0	19.8	22.6	25.4	28.3
		Pull	-	-	-	4.24	6.36	8.48	10.6	12.7	14.8	17.0	19.1	21.2
	MDC2	Push	-	-	-	5.65	8.48	11.3	14.1	17.0	19.8	-	-	-
		Pull	-	-	-	3.14	4.71	6.28	7.85	9.42	11.0	-	-	-
	MSD/MSD-K MSDG-L	Push	-	-	-	5.65	8.48	11.3	14.1	17.0	19.8	22.6	25.4	28.3
		Pull	-	-	-	3.14	4.71	6.28	7.85	9.42	11.0	12.6	14.1	15.7
	MVC	Push	-	-	-	5.65	8.48	11.3	14.1	17.0	19.8	-	-	-
		Pull	-	-	-	3.14	4.71	6.28	7.85	9.42	11.0	-	-	-
	SMG	Push	-	-	-	5.65	8.48	11.3	14.1	17.0	19.8	-	-	-
		Pull	-	-	-	4.24	6.36	8.48	10.6	12.7	14.8	-	-	-
	MRL2/ MRL2-G	Push	-	-	-	-	8.48	11.3	14.1	17.0	19.8	-	-	-
		Pull	-	-	-	-	8.48	11.3	14.1	17.0	19.8	-	-	-
	MRL2-W	Push	-	-	-	-	17.0	22.6	28.3	33.9	39.6	-	-	-
		Pull	-	-	-	-	17.0	22.6	28.3	33.9	39.6	-	-	-
	STM	Push	-	2.83	4.24	5.65	8.48	11.3	14.1	17.0	19.8	-	-	-
		Pull	-	2.12	3.18	4.24	6.36	8.48	10.6	12.7	14.8	-	-	-
	STR2	Push	-	-	-	11.3	17.0	22.6	28.3	33.9	39.6	-	-	-
		Pull	-	-	-	6.28	9.42	12.6	15.7	18.8	22.0	-	-	-
	LCR	Push	-	-	8.0	11.0	17.0	23.0	28.0	34.0	40.0	-	-	-
		Pull	-	-	6.0	8.0	13.0	17.0	21.0	25.0	30.0	-	-	-
	LCG	Push	-	-	8.48	11.3	17.0	22.6	28.3	33.9	39.6	-	-	-
		Pull	-	-	6.36	8.48	12.7	17.0	21.2	25.4	29.7	-	-	-
	LCM	Push	-	-	-	5.65	8.48	11.3	14.1	17.0	19.8	-	-	-
		Pull	-	-	-	4.24	6.36	8.48	10.6	12.7	14.8	-	-	-
ø8	MDC2	Push	-	-	-	10.1	15.1	20.1	25.1	30.2	35.2	-	-	-
		Pull	-	-	-	6.13	9.19	12.3	15.3	18.4	21.4	-	-	-
	MSD/MSD-K MSDG-L	Push	-	-	-	10.1	15.1	20.1	25.1	30.2	35.2	40.2	45.2	50.3
		Pull	-	-	-	6.13	9.19	12.3	15.3	18.4	21.4	24.5	27.6	30.6
	LCR	Push	-	-	15.0	20.0	30.0	40.0	50.0	60.0	70.0	-	-	-
		Pull	-	-	11.0	15.0	23.0	30.0	38.0	45.0	53.0	-	-	-
	LCG	Push	-	-	15.1	20.1	30.2	40.2	50.3	60.3	70.4	-	-	-
		Pull	-	-	11.3	15.1	22.6	30.2	37.7	45.2	52.8	-	-	-
	LCM	Push	-	-	7.54	10.1	15.1	20.1	25.1	30.2	35.2	-	-	-
		Pull	-	-	6.48	8.64	13.0	17.3	21.6	25.9	30.2	-	-	-
	STS/STL	Push	-	-	-	10.1	15.1	20.1	25.1	30.2	35.2	40.2	45.2	50.3
		Pull	-	-	-	7.54	11.3	15.1	18.8	22.6	26.4	30.2	33.9	37.7
ø10	SCPD3	Push	-	7.85	11.8	15.7	23.6	31.4	39.3	47.1	55.0	62.8	70.7	78.5
		Pull	-	6.60	9.90	13.2	19.8	26.4	33.0	39.6	46.2	52.8	59.4	66.0
	MDC2	Push	-	7.85	11.8	15.7	23.6	31.4	39.3	47.1	55.0	-	-	-
		Pull	-	5.03	7.54	10.1	15.1	20.1	25.1	30.2	35.2	-	-	-
	MVC	Push	-	7.85	11.8	15.7	23.6	31.4	39.3	47.1	55.0	-	-	-
		Pull	-	5.03	7.54	10.1	15.1	20.1	25.1	30.2	35.2	-	-	-
	SMG	Push	-	7.85	11.8	15.7	23.6	31.4	39.3	47.1	55.0	-	-	-
		Pull	-	6.60	9.90	13.2	19.8	26.4	33.0	39.6	46.2	-	-	-
	STM	Push	-	7.85	11.8	15.7	23.6	31.4	39.3	47.1	55.0	-	-	-
		Pull	-	6.60	9.90	13.2	19.8	26.4	33.0	39.6	46.2	-	-	-
	MRL2/ MRL2-G	Push	-	-	-	-	23.6	31.4	39.3	47.1	55.0	-	-	-
		Pull	-	-	-	-	23.6	31.4	39.3	47.1	55.0	-	-	-
	MRL2-W	Push	-	-	-	-	47.1	62.8	78.5	94.2	1.10×10^2	-	-	-
		Pull	-	-	-	-	47.1	62.8	78.5	94.2	1.10×10^2	-	-	-
	MRG2	Push	-	-	-	-	23.6	31.4	39.3	47.1	55.0	-	-	-
		Pull	-	-	-	-	23.6	31.4	39.3	47.1	55.0	-	-	-
	STR2	Push	-	-	-	31.4	47.1	62.8	78.5	94.2	1.10×10^2	-	-	-
		Pull	-	-	-	20.1	30.2	40.2	50.3	60.3	70.4	-	-	-
	UCA2	Push	-	-	-	20.1	30.2	40.2	50.3	60.3	70.4	80.4	90.5	1.01×10^2
		Pull	-	-	-	20.1	30.2	40.2	50.3	60.3	70.4	80.4	90.5	1.01×10^2
ø12	MSD-K/ MSDG-L	Push	-	11.3	17.0	22.6	33.9	45.2	56.5	67.9	79.2	90.5	1.02×10^2	1.13×10^2
		Pull	-	8.48	12.7	17.0	25.4	33.9	42.4	50.9	59.4	67.9	76.3	84.8
	SSD2/SSD	Push	-	11.3	17.0	22.6	33.9	45.2	56.5	67.9	79.2	90.5	1.02×10^2	1.13×10^2
		Pull	-	8.48	12.7	17.0	25.4	33.9	42.4	50.9	59.4	67.9	76.3	84.8
	SSG	Push	-	-	17.0	22.6	33.9	45.2	56.5	67.9	79.2	90.5	1.02×10^2	1.13×10^2
		Pull	-	-	12.7	17.0	25.4	33.9	42.4	50.9	59.4	67.9	76.3	84.8
	SRL3	Push	-	-	-	27.7	41.5	55.3	69.1	83.0	96.8	-	-	-
		Pull	-	-	-	27.7	41.5	55.3	69.1	83.0	96.8	-	-	-
	SRT	Push	-	-	-	27.7	41.5	55.3	69.1	83.0	96.8	-	-	-
		Pull	-	-	-	27.7	41.5	55.3	69.1	83.0	96.8	-	-	-
	LCW	Push	-	-	17.0	23.0	34.0	45.0	57.0	68.0	79.0	-	-	-
		Pull	-	-	13.0	17.0	25.0	34.0	42.0	51.0	59.0	-	-	-
	LCR	Push	-	-	34.0	45.0	68.0	90.0	1.13×10^2	1.36×10^2	1.58×10^2	-	-	-
		Pull	-	-	25.0	34.0	51.0	68.0	85.0	1.02×10^2	1.19×10^2	-	-	-
	LCG	Push	-	-	33.9	45.2	67.9	90.5	1.13×10^2	1.36×10^2	1.58×10^2	-	-	-
		Pull	-	-	25.4	33.9	50.9	67.9	84.8	1.02×10^2	1.19×10^2	-	-	-
	STS/STL	Push	-	-	-	22.6	33.9	45.2	56.5	67.9	79.2	90.5	1.02×10^2	1.13×10^2
		Pull	-	-	-	17.0	25.4	33.9	42.4	50.9	59.4	67.9	76.3	84.8
	STG	Push	-	-	17.0	22.6	33.9	45.2	56.5	67.9	79.2	90.5	1.02×10^2	1.13×10^2
		Pull	-	-	12.7	17.0	25.4	33.9	42.4	50.9	59.4	67.9	76.3	84.8
	SRG	Push	-	-	-	27.7	41.5	55.3	69.1	83.0	96.8	-	-	-
		Pull	-	-	-	27.7	41.5	55.3	69.1	83.0	96.8	-	-	-

Theoretical thrust table (double acting)

(Unit: N)

Push ←
Pull →

Bore size (mm)	Compatible models	Operating direction	Working pressure MPa 0.05	0.1	0.15	0.2	0.3	0.4	0.5	0.6	0.7	0.8	0.9	1.0
ø12	RCS2	Push	-	11.3	-	22.6	33.9	45.2	56.5	67.9	79.2	90.5	$1.02x10^2$	$1.13x10^2$
		Pull	-	8.5	-	17.0	25.4	33.9	42.4	50.9	59.4	67.9	76.3	84.8
ø16	SCPD3/ULKP	Push	-	20.1	30.2	40.2	60.3	80.4	$1.01x10^2$	$1.21x10^2$	$1.41x10^2$	$1.61x10^2$	$1.81x10^2$	$2.01x10^2$
		Pull	-	18.1	27.2	36.3	54.4	72.6	90.7	$1.09x10^2$	$1.27x10^2$	$1.45x10^2$	$1.63x10^2$	$1.81x10^2$
	MSD-K/ MSDG-L	Push	-	20.1	30.2	40.2	60.3	80.4	$1.01x10^2$	$1.21x10^2$	$1.41x10^2$	$1.61x10^2$	$1.81x10^2$	$2.01x10^2$
		Pull	-	15.1	22.6	30.2	45.2	60.3	75.4	90.5	$1.06x10^2$	$1.21x10^2$	$1.36x10^2$	$1.51x10^2$
	SMG	Push	-	20.1	30.2	40.2	60.3	80.4	$1.01x10^2$	$1.21x10^2$	$1.41x10^2$	-	-	-
		Pull	-	17.3	25.9	34.6	51.8	69.1	86.4	$1.04x10^2$	$1.21x10^2$	-	-	-
	STG	Push	-	-	30.2	40.2	60.3	80.4	$1.01x10^2$	$1.21x10^2$	$1.41x10^2$	$1.61x10^2$	$1.81x10^2$	$2.01x10^2$
		Pull	-	-	22.6	30.2	45.2	60.3	75.4	90.5	$1.06x10^2$	$1.21x10^2$	$1.36x10^2$	$1.51x10^2$
	MRL2/ MRL2-G	Push	-	-	-	40.2	60.3	80.4	$1.01x10^2$	$1.21x10^2$	$1.41x10^2$	-	-	-
		Pull	-	-	-	40.2	60.3	80.4	$1.01x10^2$	$1.21x10^2$	$1.41x10^2$	-	-	-
	MRL2-W	Push	-	-	-	80.4	$1.21x10^2$	$1.61x10^2$	$2.01x10^2$	$2.41x10^2$	$2.81x10^2$	-	-	-
		Pull	-	-	-	80.4	$1.21x10^2$	$1.61x10^2$	$2.01x10^2$	$2.41x10^2$	$2.81x10^2$	-	-	-
	MRG2	Push	-	-	-	40.2	60.3	80.4	$1.01x10^2$	$1.21x10^2$	$1.41x10^2$	-	-	-
		Pull	-	-	-	40.2	60.3	80.4	$1.01x10^2$	$1.21x10^2$	$1.41x10^2$	-	-	-
	STR2	Push	-	40.2	60.3	80.4	$1.21x10^2$	$1.61x10^2$	$2.01x10^2$	$2.41x10^2$	$2.81x10^2$	-	-	-
		Pull	-	24.5	36.8	49.0	73.5	98.0	$1.23x10^2$	$1.47x10^2$	$1.72x10^2$	-	-	-
	UCA2	Push	-	-	-	49.0	73.5	98.0	$1.23x10^2$	$1.47x10^2$	$1.72x10^2$	$1.96x10^2$	$2.21x10^2$	$2.45x10^2$
		Pull	-	-	-	49.0	73.5	98.0	$1.23x10^2$	$1.47x10^2$	$1.72x10^2$	$1.96x10^2$	$2.21x10^2$	$2.45x10^2$
	SSD2/SSD	Push	-	20.1	30.2	40.2	60.3	80.4	$1.01x10^2$	$1.21x10^2$	$1.41x10^2$	$1.61x10^2$	$1.81x10^2$	$2.01x10^2$
		Pull	-	15.1	22.6	30.2	45.2	60.3	75.4	90.5	$1.06x10^2$	$1.21x10^2$	$1.36x10^2$	$1.51x10^2$
	SSG	Push	-	-	30.2	40.2	60.3	80.4	$1.01x10^2$	$1.21x10^2$	$1.41x10^2$	$1.61x10^2$	$1.81x10^2$	$2.01x10^2$
		Pull	-	-	22.6	30.2	45.2	60.3	75.4	90.5	$1.06x10^2$	$1.21x10^2$	$1.36x10^2$	$1.51x10^2$
	SRL3	Push	-	-	-	43.2	64.8	86.4	$1.08x10^2$	$1.30x10^2$	$1.51x10^2$	-	-	-
		Pull	-	-	-	43.2	64.8	86.4	$1.08x10^2$	$1.30x10^2$	$1.51x10^2$	-	-	-
	SRT3	Push	-	-	-	43.2	64.8	86.4	$1.08x10^2$	$1.30x10^2$	$1.51x10^2$	-	-	-
		Pull	-	-	-	43.2	64.8	86.4	$1.08x10^2$	$1.30x10^2$	$1.51x10^2$	-	-	-
	LCW	Push	-	-	30.0	40.0	60.0	80.0	$1.01x10^2$	$1.21x10^2$	$1.41x10^2$	-	-	-
		Pull	-	-	26.0	35.0	52.0	69.0	86.0	$1.04x10^2$	$1.21x10^2$	-	-	-
	LCR	Push	-	-	60.0	80.0	$1.21x10^2$	$1.61x10^2$	$2.01x10^2$	$2.41x10^2$	$2.81x10^2$	-	-	-
		Pull	-	-	52.0	69.0	$1.04x10^2$	$1.38x10^2$	$1.73x10^2$	$2.07x10^2$	$2.42x10^2$	-	-	-
	LCG	Push	-	-	60.3	80.4	$1.21x10^2$	$1.61x10^2$	$2.01x10^2$	$2.41x10^2$	$2.81x10^2$	-	-	-
		Pull	-	-	51.8	69.1	$1.04x10^2$	$1.38x10^2$	$1.73x10^2$	$2.07x10^2$	$2.42x10^2$	-	-	-
	STS/STL	Push	-	-	-	40.2	60.3	80.4	$1.01x10^2$	$1.21x10^2$	$1.41x10^2$	$1.61x10^2$	$1.81x10^2$	$2.01x10^2$
		Pull	-	-	-	30.2	45.2	60.3	75.4	90.5	$1.06x10^2$	$1.21x10^2$	$1.36x10^2$	$1.51x10^2$
	SRG3	Push	-	-	-	43.2	64.8	86.4	$1.08x10^2$	$1.30x10^2$	$1.51x10^2$	-	-	-
		Pull	-	-	-	43.2	64.8	86.4	$1.08x10^2$	$1.30x10^2$	$1.51x10^2$	-	-	-
	RCS2	Push	-	20.1	-	40.2	60.3	80.4	$1.01x10^2$	$1.21x10^2$	$1.41x10^2$	$1.61x10^2$	$1.81x10^2$	$2.01x10^2$
		Pull	-	15.1	-	30.2	45.2	60.3	75.4	90.5	$1.06x10^2$	$1.21x10^2$	$1.36x10^2$	$1.51x10^2$
	RCC2	Push	-	-	-	40.2	60.3	80.4	$1.01x10^2$	$1.21x10^2$	$1.41x10^2$	$1.61x10^2$	$1.81x10^2$	$2.01x10^2$
		Pull	-	-	-	24.5	36.8	49.0	61.3	73.5	85.8	98.0	$1.10x10^2$	$1.23x10^2$
ø20	CMK2/ULK/JSK2 HCA/HCM/SSD2/SSD	Push	-	31.4	47.1	62.8	94.2	$1.26x10^2$	$1.57x10^2$	$1.88x10^2$	$2.20x10^2$	$2.51x10^2$	$2.83x10^2$	$3.14x10^2$
		Pull	-	23.6	35.3	47.1	70.7	94.2	$1.18x10^2$	$1.41x10^2$	$1.65x10^2$	$1.88x10^2$	$2.12x10^2$	$2.36x10^2$
	CMA2/JSM2	Push	-	31.4	47.1	62.8	94.2	$1.26x10^2$	$1.57x10^2$	$1.88x10^2$	$2.20x10^2$	-	-	-
		Pull	-	23.6	35.3	47.1	70.7	94.2	$1.18x10^2$	$1.41x10^2$	$1.65x10^2$	-	-	-
	SSG	Push	-	-	47.1	62.8	94.2	$1.26x10^2$	$1.57x10^2$	$1.88x10^2$	$2.20x10^2$	$2.51x10^2$	$2.83x10^2$	$3.14x10^2$
		Pull	-	-	35.3	47.1	70.7	94.2	$1.18x10^2$	$1.41x10^2$	$1.65x10^2$	$1.88x10^2$	$2.12x10^2$	$2.36x10^2$
	SMG	Push	-	31.4	47.1	62.8	94.2	$1.26x10^2$	$1.57x10^2$	$1.88x10^2$	$2.20x10^2$	-	-	-
		Pull	-	26.4	39.6	52.8	79.2	$1.06x10^2$	$1.32x10^2$	$1.58x10^2$	$1.85x10^2$	-	-	-
	MRL2/ MRL2-G	Push	-	-	-	62.8	94.2	$1.26x10^2$	$1.57x10^2$	$1.88x10^2$	$2.20x10^2$	-	-	-
		Pull	-	-	-	62.8	94.2	$1.26x10^2$	$1.57x10^2$	$1.88x10^2$	$2.20x10^2$	-	-	-
	MRL2-W	Push	-	-	-	$1.26x10^2$	$1.88x10^2$	$2.51x10^2$	$3.14x10^2$	$3.77x10^2$	$4.40x10^2$	-	-	-
		Pull	-	-	-	$1.26x10^2$	$1.88x10^2$	$2.51x10^2$	$3.14x10^2$	$3.77x10^2$	$4.40x10^2$	-	-	-
	STR2	Push	-	62.8	94.2	$1.26x10^2$	$1.88x10^2$	$2.51x10^2$	$3.14x10^2$	$3.77x10^2$	$4.40x10^2$	-	-	-
		Pull	-	40.2	60.3	80.4	$1.21x10^2$	$1.61x10^2$	$2.01x10^2$	$2.41x10^2$	$2.81x10^2$	-	-	-
	LCW	Push	-	-	47.0	63.0	94.0	$1.26x10^2$	$1.57x10^2$	$1.88x10^2$	$2.20x10^2$	-	-	-
		Pull	-	-	40.0	53.0	79.0	$1.06x10^2$	$1.32x10^2$	$1.58x10^2$	$1.85x10^2$	-	-	-
	LCR	Push	-	-	94.0	$1.26x10^2$	$1.88x10^2$	$2.51x10^2$	$3.14x10^2$	$3.77x10^2$	$4.40x10^2$	-	-	-
		Pull	-	-	79.0	$1.06x10^2$	$1.58x10^2$	$2.11x10^2$	$2.64x10^2$	$3.17x10^2$	$3.69x10^2$	-	-	-
	LCG	Push	-	-	94.2	$1.26x10^2$	$1.88x10^2$	$2.51x10^2$	$3.14x10^2$	$3.77x10^2$	$4.40x10^2$	-	-	-
		Pull	-	-	79.2	$1.06x10^2$	$1.58x10^2$	$2.11x10^2$	$2.64x10^2$	$3.17x10^2$	$3.69x10^2$	-	-	-
	STG	Push	-	-	47.1	62.8	94.2	$1.26x10^2$	$1.57x10^2$	$1.88x10^2$	$2.20x10^2$	$2.51x10^2$	$2.83x10^2$	$3.14x10^2$
		Pull	-	-	35.3	47.1	70.7	94.2	$1.18x10^2$	$1.41x10^2$	$1.65x10^2$	$1.88x10^2$	$2.12x10^2$	$2.36x10^2$
	STS/STL	Push	-	-	-	62.8	94.2	$1.26x10^2$	$1.57x10^2$	$1.88x10^2$	$2.20x10^2$	$2.51x10^2$	$2.83x10^2$	$3.14x10^2$
		Pull	-	-	-	47.1	70.7	94.2	$1.18x10^2$	$1.41x10^2$	$1.65x10^2$	$1.88x10^2$	$2.12x10^2$	$2.36x10^2$
	STK/STK-M	Push	-	-	-	62.8	94.2	$1.26x10^2$	$1.57x10^2$	$1.88x10^2$	$2.20x10^2$	$2.51x10^2$	$2.83x10^2$	$3.14x10^2$
		Pull	-	-	-	40.2	60.3	80.4	$1.01x10^2$	$1.21x10^2$	$1.41x10^2$	$1.61x10^2$	$1.81x10^2$	$2.01x10^2$
	STK-Y1/STK-MY1	Push	-	-	-	-	94.2	$1.26x10^2$	$1.57x10^2$	$1.88x10^2$	$2.20x10^2$	$2.51x10^2$	$2.83x10^2$	$3.14x10^2$
		Pull	-	-	-	-	45.6	65.7	85.8	$1.06x10^2$	$1.26x10^2$	$1.46x10^2$	$1.66x10^2$	$1.86x10^2$
	SRG3	Push	-	-	-	62.9	94.4	$1.26x10^2$	$1.57x10^2$	$1.89x10^2$	$2.20x10^2$	-	-	-
		Pull	-	-	-	62.9	94.4	$1.26x10^2$	$1.57x10^2$	$1.89x10^2$	$2.20x10^2$	-	-	-
	SCM	Push	-	31.4	47.1	62.8	94.2	$1.26x10^2$	$1.57x10^2$	$1.88x10^2$	$2.20x10^2$	$2.51x10^2$	$2.83x10^2$	$3.14x10^2$
		Pull	-	26.4	39.6	52.8	79.2	$1.06x10^2$	$1.32x10^2$	$1.58x10^2$	$1.85x10^2$	$2.11x10^2$	$2.38x10^2$	$2.64x10^2$
	SRL3	Push	-	-	-	62.9	94.4	$1.26x10^2$	$1.57x10^2$	$1.89x10^2$	$2.20x10^2$	-	-	-
		Pull	-	-	-	62.9	94.4	$1.26x10^2$	$1.57x10^2$	$1.89x10^2$	$2.20x10^2$	-	-	-
	SRT3	Push	-	-	-	62.9	94.4	$1.26x10^2$	$1.57x10^2$	$1.89x10^2$	$2.20x10^2$	-	-	-
		Pull	-	-	-	62.9	94.4	$1.26x10^2$	$1.57x10^2$	$1.89x10^2$	$2.20x10^2$	-	-	-
	RCS2	Push	-	31.4	-	62.8	94.2	$1.26x10^2$	$1.57x10^2$	$1.88x10^2$	$2.20x10^2$	$2.51x10^2$	$2.83x10^2$	$3.14x10^2$
		Pull	-	20.1	-	40.2	60.3	80.4	$1.01x10^2$	$1.21x10^2$	$1.41x10^2$	$1.61x10^2$	$1.81x10^2$	$2.01x10^2$
	RCC2	Push	-	-	-	62.8	94.2	$1.26x10^2$	$1.57x10^2$	$1.89x10^2$	$2.20x10^2$	$2.51x10^2$	$2.83x10^2$	$3.14x10^2$
		Pull	-	-	-	40.2	60.3	80.4	$1.01x10^2$	$1.21x10^2$	$1.41x10^2$	$1.61x10^2$	$1.81x10^2$	$2.01x10^2$

Theoretical thrust table (double acting)

(Unit: N)

Push ←
Pull →

Bore size (mm)	Compatible models	Operating direction	Working pressure MPa 0.05	0.1	0.15	0.2	0.3	0.4	0.5	0.6	0.7	0.8	0.9	1.0
ø25	CMK2/ULK/JSK2 HCA/HCM/SSD2/SSD	Push	-	49.1	73.6	98.2	$1.47x10^2$	$1.96x10^2$	$2.45x10^2$	$2.95x10^2$	$3.44x10^2$	$3.93x10^2$	$4.42x10^2$	$4.91x10^2$
		Pull	-	37.8	56.7	75.6	$1.13x10^2$	$1.51x10^2$	$1.89x10^2$	$2.27x10^2$	$2.64x10^2$	$3.02x10^2$	$3.40x10^2$	$3.78x10^2$
	SSG	Push	-	-	73.6	98.2	$1.47x10^2$	$1.96x10^2$	$2.45x10^2$	$2.95x10^2$	$3.44x10^2$	$3.93x10^2$	$4.42x10^2$	$4.91x10^2$
		Pull	-	-	56.7	75.6	$1.13x10^2$	$1.51x10^2$	$1.89x10^2$	$2.27x10^2$	$2.64x10^2$	$3.02x10^2$	$3.40x10^2$	$3.78x10^2$
	SMG	Push	-	49.1	73.6	98.2	$1.47x10^2$	$1.96x10^2$	$2.45x10^2$	$2.95x10^2$	$3.44x10^2$	-	-	-
		Pull	-	41.2	61.9	82.5	$1.24x10^2$	$1.65x10^2$	$2.06x10^2$	$2.47x10^2$	$2.89x10^2$	-	-	-
	MRL2/ MRL2-G	Push	-	-	-	98.2	$1.47x10^2$	$1.96x10^2$	$2.45x10^2$	$2.95x10^2$	$3.44x10^2$	-	-	-
		Pull	-	-	-	98.2	$1.47x10^2$	$1.96x10^2$	$2.45x10^2$	$2.95x10^2$	$3.44x10^2$	-	-	-
	MRL2-W	Push	-	-	-	$1.96x10^2$	$2.95x10^2$	$3.93x10^2$	$4.91x10^2$	$5.89x10^2$	$6.87x10^2$	-	-	-
		Pull	-	-	-	$1.96x10^2$	$2.95x10^2$	$3.93x10^2$	$4.91x10^2$	$5.89x10^2$	$6.87x10^2$	-	-	-
	MRG2	Push	-	-	-	98.2	$1.47x10^2$	$1.96x10^2$	$2.45x10^2$	$2.95x10^2$	$3.44x10^2$	-	-	-
		Pull	-	-	-	98.2	$1.47x10^2$	$1.96x10^2$	$2.45x10^2$	$2.95x10^2$	$3.44x10^2$	-	-	-
	LCR	Push	-	-	$1.47x10^2$	$1.96x10^2$	$2.95x10^2$	$3.93x10^2$	$4.91x10^2$	$5.89x10^2$	$6.87x10^2$	-	-	-
		Pull	-	-	$1.24x10^2$	$1.65x10^2$	$2.47x10^2$	$3.30x10^2$	$4.12x10^2$	$4.95x10^2$	$5.77x10^2$	-	-	-
	LCG	Push	-	-	$1.47x10^2$	$1.96x10^2$	$2.95x10^2$	$3.93x10^2$	$4.91x10^2$	$5.89x10^2$	$6.87x10^2$	-	-	-
		Pull	-	-	$1.24x10^2$	$1.65x10^2$	$2.47x10^2$	$3.30x10^2$	$4.12x10^2$	$4.95x10^2$	$5.77x10^2$	-	-	-
	LCX	Push	-	-	74	99	$1.48x10^2$	$1.97x10^2$	$2.46x10^2$	$2.96x10^2$	$3.45x10^2$	-	-	-
		Pull	-	-	57	76	$1.14x10^2$	$1.52x10^2$	$1.90x10^2$	$2.28x10^2$	$2.66x10^2$	-	-	-
	STG	Push	-	-	73.6	98.2	$1.47x10^2$	$1.96x10^2$	$2.45x10^2$	$2.95x10^2$	$3.44x10^2$	$3.93x10^2$	$4.42x10^2$	$4.91x10^2$
		Pull	-	-	56.7	75.6	$1.13x10^2$	$1.51x10^2$	$1.89x10^2$	$2.27x10^2$	$2.64x10^2$	$3.02x10^2$	$3.40x10^2$	$3.78x10^2$
	STS/STL	Push	-	-	-	98.2	$1.47x10^2$	$1.96x10^2$	$2.45x10^2$	$2.95x10^2$	$3.44x10^2$	$3.93x10^2$	$4.42x10^2$	$4.91x10^2$
		Pull	-	-	-	75.6	$1.13x10^2$	$1.51x10^2$	$1.89x10^2$	$2.27x10^2$	$2.64x10^2$	$3.02x10^2$	$3.40x10^2$	$3.78x10^2$
	STR2	Push	-	98.2	$1.47x10^2$	$1.96x10^2$	$2.95x10^2$	$3.93x10^2$	$4.91x10^2$	$5.89x10^2$	$6.87x10^2$	-	-	-
		Pull	-	67.4	$1.01x10^2$	$1.35x10^2$	$2.02x10^2$	$2.70x10^2$	$3.37x10^2$	$4.04x10^2$	$4.72x10^2$	-	-	-
	UCA2	Push	-	67.4	$1.01x10^2$	$1.35x10^2$	$2.02x10^2$	$2.70x10^2$	$3.37x10^2$	$4.04x10^2$	$4.72x10^2$	$5.39x10^2$	$6.06x10^2$	$6.74x10^2$
		Pull	-	67.4	$1.01x10^2$	$1.35x10^2$	$2.02x10^2$	$2.70x10^2$	$3.37x10^2$	$4.04x10^2$	$4.72x10^2$	$5.39x10^2$	$6.06x10^2$	$6.74x10^2$
	SRG3	Push	-	54.2	81.4	$1.08x10^2$	$1.63x10^2$	$2.17x10^2$	$2.71x10^2$	$3.25x10^2$	$3.80x10^2$	-	-	-
		Pull	-	54.2	81.4	$1.08x10^2$	$1.63x10^2$	$2.17x10^2$	$2.71x10^2$	$3.25x10^2$	$3.80x10^2$	-	-	-
	SRM3	Push	-	-	-	$1.08x10^2$	$1.63x10^2$	$2.17x10^2$	$2.71x10^2$	$3.25x10^2$	$3.80x10^2$	-	-	-
		Pull	-	-	-	$1.08x10^2$	$1.63x10^2$	$2.17x10^2$	$2.71x10^2$	$3.25x10^2$	$3.80x10^2$	-	-	-
	SCM	Push	-	49.1	73.6	98.2	$1.47x10^2$	$1.96x10^2$	$2.45x10^2$	$2.95x10^2$	$3.44x10^2$	$3.93x10^2$	$4.42x10^2$	$4.91x10^2$
		Pull	-	41.2	61.9	82.5	$1.24x10^2$	$1.65x10^2$	$2.06x10^2$	$2.47x10^2$	$2.89x10^2$	$3.30x10^2$	$3.71x10^2$	$4.12x10^2$
	SRL3	Push	-	54.2	81.4	$1.08x10^2$	$1.63x10^2$	$2.17x10^2$	$2.71x10^2$	$3.25x10^2$	$3.80x10^2$	-	-	-
		Pull	-	54.2	81.4	$1.08x10^2$	$1.63x10^2$	$2.17x10^2$	$2.71x10^2$	$3.25x10^2$	$3.80x10^2$	-	-	-
	SRT3	Push	-	-	-	$1.08x10^2$	$1.63x10^2$	$2.17x10^2$	$2.71x10^2$	$3.25x10^2$	$3.80x10^2$	-	-	-
		Pull	-	-	-	$1.08x10^2$	$1.63x10^2$	$2.17x10^2$	$2.71x10^2$	$3.25x10^2$	$3.80x10^2$	-	-	-
	FCD	Push	-	49.3	73.9	98.5	$1.48x10^2$	$1.97x10^2$	$2.46x10^2$	$2.96x10^2$	3.45x102	-	-	-
		Pull	-	37.9	56.9	75.9	$1.14x10^2$	$1.52x10^2$	$1.90x10^2$	$2.28x10^2$	$2.66x10^2$	-	-	-
	UFCD	Push	-	-	-	98.5	$1.48x10^2$	$1.97x10^2$	$2.46x10^2$	$2.96x10^2$	3.45x102	-	-	-
		Pull	-	-	-	75.9	$1.14x10^2$	$1.52x10^2$	$1.90x10^2$	$2.28x10^2$	$2.66x10^2$	-	-	-
	RCS2	Push	-	49.1	-	98.2	$1.47x10^2$	$1.96x10^2$	$2.45x10^2$	$2.95x10^2$	$3.44x10^2$	$3.93x10^2$	$4.42x10^2$	$4.91x10^2$
		Pull	-	37.8	-	75.6	$1.13x10^2$	$1.51x10^2$	$1.89x10^2$	$2.27x10^2$	$2.64x10^2$	$3.02x10^2$	$3.40x10^2$	$3.78x10^2$
	RCC2	Push	-	-	-	98.2	$1.47x10^2$	$1.96x10^2$	$2.45x10^2$	$2.95x10^2$	$3.44x10^2$	$3.93x10^2$	$4.42x10^2$	$4.91x10^2$
		Pull	-	-	-	75.6	$1.13x10^2$	$1.51x10^2$	$1.89x10^2$	$2.27x10^2$	$2.64x10^2$	$3.02x10^2$	$3.40x10^2$	$3.78x10^2$
ø30	CMA2/JSM2	Push	-	70.7	$1.06x10^2$	$1.41x10^2$	$2.12x10^2$	$2.83x10^2$	$3.53x10^2$	$4.24x10^2$	$4.95x10^2$	-	-	-
		Pull	-	59.4	89.1	$1.19x10^2$	$1.78x10^2$	$2.38x10^2$	$2.97x10^2$	$3.56x10^2$	$4.16x10^2$	-	-	-
	MFC-BS	Push	-	-	-	$1.41x10^2$	$2.12x10^2$	$2.83x10^2$	$3.53x10^2$	$4.24x10^2$	$4.95x10^2$	$5.65x10^2$	$6.36x10^2$	$7.07x10^2$
		Pull	-	-	-	$1.19x10^2$	$1.78x10^2$	$2.38x10^2$	$2.97x10^2$	$3.56x10^2$	$4.16x10^2$	$4.75x10^2$	$5.34x10^2$	$5.94x10^2$
ø32	SCG	Push	40.2	80.4	$1.21x10^2$	$1.61x10^2$	$2.41x10^2$	$3.22x10^2$	$4.02x10^2$	$4.83x10^2$	$5.63x10^2$	$6.43x10^2$	$7.24x10^2$	$8.04x10^2$
		Pull	34.6	69.1	$1.04x10^2$	$1.38x10^2$	$2.07x10^2$	$2.76x10^2$	$3.46x10^2$	$4.15x10^2$	$4.84x10^2$	$5.53x10^2$	$6.22x10^2$	$6.91x10^2$
	SSD2/SSD	Push	-	80.4	$1.21x10^2$	$1.61x10^2$	$2.41x10^2$	$3.22x10^2$	$4.02x10^2$	$4.83x10^2$	$5.63x10^2$	$6.43x10^2$	$7.24x10^2$	$8.04x10^2$
		Pull	-	60.3	90.5	$1.21x10^2$	$1.81x10^2$	$2.41x10^2$	$3.02x10^2$	$3.62x10^2$	$4.22x10^2$	$4.83x10^2$	$5.43x10^2$	$6.03x10^2$
	SSG	Push	-	80.4	$1.21x10^2$	$1.61x10^2$	$2.41x10^2$	$3.22x10^2$	$4.02x10^2$	$4.83x10^2$	$5.63x10^2$	$6.43x10^2$	$7.24x10^2$	$8.04x10^2$
		Pull	-	60.3	90.5	$1.21x10^2$	$1.81x10^2$	$2.41x10^2$	$3.02x10^2$	$3.62x10^2$	$4.22x10^2$	$4.83x10^2$	$5.43x10^2$	$6.03x10^2$
	CMK2/ULK/JSK2 CAC-N/HCA/HCM/SCM	Push	-	80.4	$1.21x10^2$	$1.61x10^2$	$2.41x10^2$	$3.22x10^2$	$4.02x10^2$	$4.83x10^2$	$5.63x10^2$	$6.43x10^2$	$7.24x10^2$	$8.04x10^2$
		Pull	-	69.1	$1.04x10^2$	$1.38x10^2$	$2.07x10^2$	$2.76x10^2$	$3.46x10^2$	$4.15x10^2$	$4.84x10^2$	$5.53x10^2$	$6.22x10^2$	$6.91x10^2$
	CAC-N	Push	-	-	$1.21x10^2$	$1.61x10^2$	$2.41x10^2$	$3.22x10^2$	$4.02x10^2$	$4.83x10^2$	$5.63x10^2$	$6.43x10^2$	$7.24x10^2$	$8.04x10^2$
		Pull	-	-	$1.04x10^2$	$1.38x10^2$	$2.07x10^2$	$2.76x10^2$	$3.46x10^2$	$4.15x10^2$	$4.84x10^2$	$5.53x10^2$	$6.22x10^2$	$6.91x10^2$
	SMG	Push	-	80.4	$1.21x10^2$	$1.61x10^2$	$2.41x10^2$	$3.22x10^2$	$4.02x10^2$	$4.83x10^2$	$5.63x10^2$	-	-	-
		Pull	-	69.1	$1.04x10^2$	$1.38x10^2$	$2.07x10^2$	$2.76x10^2$	$3.46x10^2$	$4.15x10^2$	$4.84x10^2$	-	-	-
	MRL2/ MRL2-G	Push	-	-	-	$1.61x10^2$	$2.41x10^2$	$3.22x10^2$	$4.02x10^2$	$4.83x10^2$	$5.63x10^2$	-	-	-
		Pull	-	-	-	$1.61x10^2$	$2.41x10^2$	$3.22x10^2$	$4.02x10^2$	$4.83x10^2$	$5.63x10^2$	-	-	-
	MRL2-W	Push	-	-	-	$3.22x10^2$	$4.83x10^2$	$6.43x10^2$	$8.04x10^2$	$9.65x10^2$	$1.13x10^2$	-	-	-
		Pull	-	-	-	$3.22x10^2$	$4.83x10^2$	$6.43x10^2$	$8.04x10^2$	$9.65x10^2$	$1.13x10^2$	-	-	-
	UCA2	Push	-	$1.21x10^2$	$1.81x10^2$	$2.41x10^2$	$3.62x10^2$	$4.83x10^2$	$6.03x10^2$	$7.24x10^2$	$8.44x10^2$	$9.65x10^2$	$1.09x10^3$	$1.21x10^3$
		Pull	-	$1.21x10^2$	$1.81x10^2$	$2.41x10^2$	$3.62x10^2$	$4.83x10^2$	$6.03x10^2$	$7.24x10^2$	$8.44x10^2$	$9.65x10^2$	$1.09x10^3$	$1.21x10^3$
	SRL3	Push	-	81.4	$1.22x10^2$	$1.63x10^2$	$2.44x10^2$	$3.26x10^2$	$4.07x10^2$	$4.88x10^2$	$5.70x10^2$	-	-	-
		Pull	-	81.4	$1.22x10^2$	$1.63x10^2$	$2.44x10^2$	$3.26x10^2$	$4.07x10^2$	$4.88x10^2$	$5.70x10^2$	-	-	-
	FCD	Push	-	77.6	$1.16x10^2$	$1.55x10^2$	$2.33x10^2$	$3.10x10^2$	$3.88x10^2$	$4.66x10^2$	$5.43x10^2$	-	-	-
		Pull	-	57.5	86.3	$1.15x10^2$	$1.73x10^2$	$2.30x10^2$	$2.88x10^2$	$3.45x10^2$	$4.03x10^2$	-	-	-
	LCX	Push	-	-	$1.16x10^2$	$1.55x10^2$	$2.33x10^2$	$3.10x10^2$	$3.88x10^2$	$4.66x10^2$	$5.43x10^2$	-	-	-
		Pull	-	-	99	$1.23x10^2$	$1.99x10^2$	$2.65x10^2$	$3.32x10^2$	$3.98x10^2$	$4.64x10^2$	-	-	-
	STG	Push	-	80.4	$1.21x10^2$	$1.61x10^2$	$2.41x10^2$	$3.22x10^2$	$4.02x10^2$	$4.83x10^2$	$5.63x10^2$	$6.43x10^2$	$7.24x10^2$	$8.04x10^2$
		Pull	-	60.3	90.5	$1.21x10^2$	$1.81x10^2$	$2.41x10^2$	$3.02x10^2$	$3.62x10^2$	$4.22x10^2$	$4.83x10^2$	$5.43x10^2$	$6.03x10^2$
	STS/STL	Push	-	80.4	$1.21x10^2$	$1.61x10^2$	$2.41x10^2$	$3.22x10^2$	$4.02x10^2$	$4.83x10^2$	$5.63x10^2$	$6.43x10^2$	$7.24x10^2$	$8.04x10^2$
		Pull	-	60.3	90.5	$1.21x10^2$	$1.81x10^2$	$2.41x10^2$	$3.02x10^2$	$3.62x10^2$	$4.22x10^2$	$4.83x10^2$	$5.43x10^2$	$6.03x10^2$
	STK/STK-M	Push	-	80.4	$1.21x10^2$	$1.61x10^2$	$2.41x10^2$	$3.22x10^2$	$4.02x10^2$	$4.83x10^2$	$5.63x10^2$	$6.43x10^2$	$7.24x10^2$	$8.04x10^2$
		Pull	-	49.0	73.5	98.0	$1.47x10^2$	$1.96x10^2$	$2.45x10^2$	$2.94x10^2$	$3.43x10^2$	$3.92x10^2$	$4.41x10^2$	$4.90x10^2$
	STK-Y1/ STK-MY1	Push	-	80.4	$1.21x10^2$	$1.61x10^2$	$2.41x10^2$	$3.22x10^2$	$4.02x10^2$	$4.83x10^2$	$5.63x10^2$	$6.43x10^2$	$7.24x10^2$	$8.04x10^2$
		Pull	-	17.6	42.1	66.6	$1.16x10^2$	$1.65x10^2$	$2.14x10^2$	$2.63x10^2$	$3.12x10^2$	$3.61x10^2$	$4.10x10^2$	$4.59x10^2$
	UFCD	Push	-	-	-	$1.55x10^2$	$2.33x10^2$	$3.10x10^2$	$3.88x10^2$	$4.66x10^2$	$5.43x10^2$	-	-	-
		Pull	-	-	-	$1.15x10^2$	$1.73x10^2$	$2.30x10^2$	$2.88x10^2$	$3.45x10^2$	$4.03x10^2$	-	-	-

Theoretical thrust table (double acting)

(Unit: N)

Push ←
Pull →

Bore size (mm)	Compatible models	Operating direction	Working pressure MPa 0.05	0.1	0.15	0.2	0.3	0.4	0.5	0.6	0.7	0.8	0.9	1.0
ø32	SRM3	Push	-	-	-	1.63×10^{2}	2.44×10^{2}	3.26×10^{2}	4.07×10^{2}	4.88×10^{2}	5.70×10^{2}	-	-	-
		Pull	-	-	-	1.63×10^{2}	2.44×10^{2}	3.26×10^{2}	4.07×10^{2}	4.88×10^{2}	5.70×10^{2}	-	-	-
	SRT3	Push	-	-	-	1.63×10^{2}	2.44×10^{2}	3.26×10^{2}	4.07×10^{2}	4.88×10^{2}	5.70×10^{2}	-	-	-
		Pull	-	-	-	1.63×10^{2}	2.44×10^{2}	3.26×10^{2}	4.07×10^{2}	4.88×10^{2}	5.70×10^{2}	-	-	-
	STR2	Push	-	1.61×10^{2}	2.41×10^{2}	3.22×10^{2}	4.83×10^{2}	6.43×10^{2}	8.04×10^{2}	9.65×10^{2}	1.13×10^{3}	-	-	-
		Pull	-	1.21×10^{2}	1.81×10^{2}	2.41×10^{2}	3.62×10^{2}	4.83×10^{2}	6.03×10^{2}	7.24×10^{2}	8.44×10^{2}	-	-	-
	RCS2	Push	-	80.4	-	1.61×10^{2}	2.41×10^{2}	3.22×10^{2}	4.02×10^{2}	4.83×10^{2}	5.63×10^{2}	6.43×10^{2}	7.24×10^{2}	8.04×10^{2}
		Pull	-	60.3	-	1.21×10^{2}	1.81×10^{2}	2.41×10^{2}	3.02×10^{2}	3.62×10^{2}	4.22×10^{2}	4.83×10^{2}	5.43×10^{2}	6.03×10^{2}
	RCC2	Push	-	-	-	1.61×10^{2}	2.41×10^{2}	3.22×10^{2}	4.02×10^{2}	4.83×10^{2}	5.63×10^{2}	6.43×10^{2}	7.24×10^{2}	8.04×10^{2}
		Pull	-	-	-	1.21×10^{2}	1.81×10^{2}	2.41×10^{2}	3.02×10^{2}	3.62×10^{2}	4.22×10^{2}	4.83×10^{2}	5.43×10^{2}	6.03×10^{2}
ø40	SCG/JSG	Push	62.8	1.26×10^{2}	1.88×10^{2}	2.51×10^{2}	3.77×10^{2}	5.03×10^{2}	6.28×10^{2}	7.54×10^{2}	8.80×10^{2}	1.01×10^{3}	1.13×10^{3}	1.26×10^{3}
		Pull	52.8	1.06×10^{2}	1.58×10^{2}	2.11×10^{2}	3.17×10^{2}	4.22×10^{2}	5.28×10^{2}	6.33×10^{2}	7.39×10^{2}	8.44×10^{2}	9.50×10^{2}	1.06×10^{3}
	SCA2/JSC3/HCA/HCM SCM/SSD2/SSD/USC	Push	-	1.26×10^{2}	1.88×10^{2}	2.51×10^{2}	3.77×10^{2}	5.03×10^{2}	6.28×10^{2}	7.54×10^{2}	8.80×10^{2}	1.01×10^{3}	1.13×10^{3}	1.26×10^{3}
		Pull	-	1.06×10^{2}	1.58×10^{2}	2.11×10^{2}	3.17×10^{2}	4.22×10^{2}	5.28×10^{2}	6.33×10^{2}	7.39×10^{2}	8.44×10^{2}	9.50×10^{2}	1.06×10^{3}
	SSG	Push	-	1.26×10^{2}	1.88×10^{2}	2.51×10^{2}	3.77×10^{2}	5.03×10^{2}	6.28×10^{2}	7.54×10^{2}	8.80×10^{2}	1.01×10^{3}	1.13×10^{3}	1.26×10^{3}
		Pull	-	1.06×10^{2}	1.58×10^{2}	2.11×10^{2}	3.17×10^{2}	4.22×10^{2}	5.28×10^{2}	6.33×10^{2}	7.39×10^{2}	8.44×10^{2}	9.50×10^{2}	1.06×10^{3}
	CMK2/ULK/CAC-N/ CKV2/JSK2	Push	-	1.26×10^{2}	1.88×10^{2}	2.51×10^{2}	3.77×10^{2}	5.03×10^{2}	6.28×10^{2}	7.54×10^{2}	8.80×10^{2}	1.01×10^{3}	1.13×10^{3}	1.26×10^{3}
		Pull	-	1.10×10^{2}	1.65×10^{2}	2.21×10^{2}	3.31×10^{2}	4.41×10^{2}	5.51×10^{2}	6.62×10^{2}	7.72×10^{2}	8.82×10^{2}	9.92×10^{2}	1.10×10^{3}
	CAC-N	Push	-	-	1.88×10^{2}	2.51×10^{2}	3.77×10^{2}	5.03×10^{2}	6.28×10^{2}	7.54×10^{2}	8.80×10^{2}	1.01×10^{3}	1.13×10^{3}	1.26×10^{3}
		Pull	-	-	1.65×10^{2}	2.21×10^{2}	3.31×10^{2}	4.41×10^{2}	5.51×10^{2}	6.62×10^{2}	7.72×10^{2}	8.82×10^{2}	9.92×10^{2}	1.10×10^{3}
	CMA2/JSM2	Push	-	1.26×10^{2}	1.88×10^{2}	2.51×10^{2}	3.77×10^{2}	5.03×10^{2}	6.28×10^{2}	7.54×10^{2}	8.80×10^{2}	-	-	-
		Pull	-	1.10×10^{2}	1.65×10^{2}	2.21×10^{2}	3.31×10^{2}	4.41×10^{2}	5.51×10^{2}	6.62×10^{2}	7.72×10^{2}	-	-	-
	SRL3	Push	-	1.27×10^{2}	1.90×10^{2}	2.53×10^{2}	3.80×10^{2}	5.06×10^{2}	6.33×10^{2}	7.60×10^{2}	8.86×10^{2}	-	-	-
		Pull	-	1.27×10^{2}	1.90×10^{2}	2.53×10^{2}	3.80×10^{2}	5.06×10^{2}	6.33×10^{2}	7.60×10^{2}	8.86×10^{2}	-	-	-
	FCD	Push	-	1.29×10^{2}	1.94×10^{2}	2.58×10^{2}	3.87×10^{2}	5.16×10^{2}	6.45×10^{2}	7.75×10^{2}	9.04×10^{2}	-	-	-
		Pull	-	1.09×10^{2}	1.63×10^{2}	2.18×10^{2}	3.27×10^{2}	4.36×10^{2}	5.45×10^{2}	6.54×10^{2}	7.63×10^{2}	-	-	-
	STG	Push	-	1.26×10^{2}	1.88×10^{2}	2.51×10^{2}	3.77×10^{2}	5.03×10^{2}	6.28×10^{2}	7.54×10^{2}	8.80×10^{2}	1.01×10^{3}	1.13×10^{3}	1.26×10^{3}
		Pull	-	1.06×10^{2}	1.58×10^{2}	2.11×10^{2}	3.17×10^{2}	4.22×10^{2}	5.28×10^{2}	6.33×10^{2}	7.39×10^{2}	8.44×10^{2}	9.50×10^{2}	1.06×10^{3}
	STS/STL	Push	-	1.26×10^{2}	1.88×10^{2}	2.51×10^{2}	3.77×10^{2}	5.03×10^{2}	6.28×10^{2}	7.54×10^{2}	8.80×10^{2}	1.01×10^{3}	1.13×10^{3}	1.26×10^{3}
		Pull	-	1.06×10^{2}	1.58×10^{2}	2.11×10^{2}	3.17×10^{2}	4.22×10^{2}	5.28×10^{2}	6.33×10^{2}	7.39×10^{2}	8.44×10^{2}	9.50×10^{2}	1.06×10^{3}
	STK/STK-M	Push	-	1.26×10^{2}	1.88×10^{2}	2.51×10^{2}	3.77×10^{2}	5.03×10^{2}	6.28×10^{2}	7.54×10^{2}	8.80×10^{2}	1.01×10^{3}	1.13×10^{3}	1.26×10^{3}
		Pull	-	76.6	1.15×10^{2}	1.53×10^{2}	2.30×10^{2}	3.06×10^{2}	3.83×10^{2}	4.59×10^{2}	5.36×10^{2}	6.13×10^{2}	6.89×10^{2}	7.66×10^{2}
	STK-Y1/ STK-MY1	Push	-	1.26×10^{2}	1.88×10^{2}	2.51×10^{2}	3.77×10^{2}	5.03×10^{2}	6.28×10^{2}	7.54×10^{2}	8.80×10^{2}	1.01×10^{3}	1.13×10^{3}	1.26×10^{3}
		Pull	-	32.2	70.5	1.09×10^{2}	1.85×10^{2}	2.62×10^{2}	3.38×10^{2}	4.15×10^{2}	4.92×10^{2}	5.68×10^{2}	6.45×10^{2}	7.21×10^{2}
	UFCD	Push	-	-	-	2.58×10^{2}	3.87×10^{2}	5.16×10^{2}	6.45×10^{2}	7.75×10^{2}	9.04×10^{2}	-	-	-
		Pull	-	-	-	2.18×10^{2}	3.27×10^{2}	4.36×10^{2}	5.45×10^{2}	6.54×10^{2}	7.63×10^{2}	-	-	-
	MFC-BS	Push	-	-	-	2.51×10^{2}	3.77×10^{2}	5.03×10^{2}	6.28×10^{2}	7.54×10^{2}	8.80×10^{2}	1.01×10^{3}	1.13×10^{3}	1.26×10^{3}
		Pull	-	-	-	2.21×10^{2}	3.31×10^{2}	4.41×10^{2}	5.51×10^{2}	6.62×10^{2}	7.72×10^{2}	8.82×10^{2}	9.92×10^{2}	1.10×10^{3}
	SRM3	Push	-	-	-	2.53×10^{2}	3.80×10^{2}	5.06×10^{2}	6.33×10^{2}	7.60×10^{2}	8.86×10^{2}	-	-	-
		Pull	-	-	-	2.53×10^{2}	3.80×10^{2}	5.06×10^{2}	6.33×10^{2}	7.60×10^{2}	8.86×10^{2}	-	-	-
	SRT3	Push	-	-	-	2.53×10^{2}	3.80×10^{2}	5.06×10^{2}	6.33×10^{2}	7.60×10^{2}	8.86×10^{2}	-	-	-
		Pull	-	-	-	2.53×10^{2}	3.80×10^{2}	5.06×10^{2}	6.33×10^{2}	7.60×10^{2}	8.86×10^{2}	-	-	-
	CAC4/UCAC2	Push	-	1.26×10^{2}	1.88×10^{2}	2.51×10^{2}	3.77×10^{2}	5.03×10^{2}	6.28×10^{2}	7.54×10^{2}	8.80×10^{2}	1.01×10^{3}	1.13×10^{3}	1.26×10^{3}
		Pull	-	94.2	1.41×10^{2}	1.88×10^{2}	2.83×10^{2}	3.77×10^{2}	4.71×10^{2}	5.65×10^{2}	6.60×10^{2}	7.54×10^{2}	8.48×10^{2}	9.42×10^{2}
	RCS2	Push	-	1.26×10^{2}	-	2.51×10^{2}	3.77×10^{2}	5.03×10^{2}	6.28×10^{2}	7.54×10^{2}	8.80×10^{2}	1.01×10^{3}	1.13×10^{3}	1.26×10^{3}
		Pull	-	1.06×10^{2}	-	2.11×10^{2}	3.17×10^{2}	4.22×10^{2}	5.28×10^{2}	6.33×10^{2}	7.39×10^{2}	8.44×10^{2}	9.50×10^{2}	1.06×10^{3}
	RCC2	Push	-	-	-	2.51×10^{2}	3.77×10^{2}	5.03×10^{2}	6.28×10^{2}	7.54×10^{2}	8.80×10^{2}	1.01×10^{3}	1.13×10^{3}	1.26×10^{3}
		Pull	-	-	-	2.11×10^{2}	3.17×10^{2}	4.22×10^{2}	5.28×10^{2}	6.33×10^{2}	7.39×10^{2}	8.45×10^{2}	9.50×10^{2}	1.06×10^{3}
	GLC	Push	-	-	-	2.51×10^{2}	3.77×10^{2}	5.03×10^{2}	6.28×10^{2}	7.54×10^{2}	8.80×10^{2}	1.01×10^{3}	1.13×10^{3}	1.26×10^{3}
		Pull	-	-	-	1.53×10^{2}	2.30×10^{2}	3.06×10^{2}	3.83×10^{2}	4.59×10^{2}	5.36×10^{2}	6.13×10^{2}	6.89×10^{2}	7.66×10^{2}
ø50	SCG/JSG	Push	98.2	1.96×10^{2}	2.95×10^{2}	3.93×10^{2}	5.89×10^{2}	7.85×10^{2}	9.82×10^{2}	1.18×10^{3}	1.37×10^{3}	1.57×10^{3}	1.77×10^{3}	1.96×10^{3}
		Pull	82.5	1.65×10^{2}	2.47×10^{2}	3.30×10^{2}	4.95×10^{2}	6.60×10^{2}	8.25×10^{2}	9.90×10^{2}	1.15×10^{3}	1.32×10^{3}	1.48×10^{3}	1.65×10^{3}
	SCA2/JSC3/HCA/HCM SCM/SSD2/SSD/USC	Push	-	1.96×10^{2}	2.95×10^{2}	3.93×10^{2}	5.89×10^{2}	7.85×10^{2}	9.82×10^{2}	1.18×10^{3}	1.37×10^{3}	1.57×10^{3}	1.77×10^{3}	1.96×10^{3}
		Pull	-	1.65×10^{2}	2.47×10^{2}	3.30×10^{2}	4.95×10^{2}	6.60×10^{2}	8.25×10^{2}	9.90×10^{2}	1.15×10^{3}	1.32×10^{3}	1.48×10^{3}	1.65×10^{3}
	SSG	Push	-	1.96×10^{2}	2.95×10^{2}	3.93×10^{2}	5.89×10^{2}	7.85×10^{2}	9.82×10^{2}	1.18×10^{3}	1.37×10^{3}	1.57×10^{3}	1.77×10^{3}	1.96×10^{3}
		Pull	-	1.65×10^{2}	2.47×10^{2}	3.30×10^{2}	4.95×10^{2}	6.60×10^{2}	8.25×10^{2}	9.90×10^{2}	1.15×10^{3}	1.32×10^{3}	1.48×10^{3}	1.65×10^{3}
	CAV2/COV2	Push	-	-	-	3.93×10^{2}	5.89×10^{2}	7.85×10^{2}	9.82×10^{2}	1.18×10^{3}	1.37×10^{3}	-	-	-
		Pull	-	-	-	3.30×10^{2}	4.95×10^{2}	6.60×10^{2}	8.25×10^{2}	9.90×10^{2}	1.15×10^{3}	-	-	-
	SRL3	Push	-	1.99×10^{2}	2.98×10^{2}	3.98×10^{2}	5.96×10^{2}	7.95×10^{2}	9.94×10^{2}	1.19×10^{3}	1.39×10^{3}	-	-	-
		Pull	-	1.99×10^{2}	2.98×10^{2}	3.98×10^{2}	5.96×10^{2}	7.95×10^{2}	9.94×10^{2}	1.19×10^{3}	1.39×10^{3}	-	-	-
	FCD	Push	-	1.93×10^{2}	2.90×10^{2}	3.86×10^{2}	5.80×10^{2}	7.73×10^{2}	9.66×10^{2}	1.16×10^{3}	1.35×10^{3}	-	-	-
		Pull	-	1.62×10^{2}	2.43×10^{2}	3.24×10^{2}	4.85×10^{2}	6.47×10^{2}	8.09×10^{2}	9.71×10^{2}	1.13×10^{3}	-	-	-
	STG	Push	-	1.96×10^{2}	2.95×10^{2}	3.93×10^{2}	5.89×10^{2}	7.85×10^{2}	9.82×10^{2}	1.18×10^{3}	1.37×10^{3}	1.57×10^{3}	1.77×10^{3}	1.96×10^{3}
		Pull	-	1.65×10^{2}	2.47×10^{2}	3.30×10^{2}	4.95×10^{2}	6.60×10^{2}	8.25×10^{2}	9.90×10^{2}	1.15×10^{3}	1.32×10^{3}	1.48×10^{3}	1.65×10^{3}
	STS/STL	Push	-	1.96×10^{2}	2.95×10^{2}	3.93×10^{2}	5.89×10^{2}	7.85×10^{2}	9.82×10^{2}	1.18×10^{3}	1.37×10^{3}	1.57×10^{3}	1.77×10^{3}	1.96×10^{3}
		Pull	-	1.65×10^{2}	2.47×10^{2}	3.30×10^{2}	4.95×10^{2}	6.60×10^{2}	8.25×10^{2}	9.90×10^{2}	1.15×10^{3}	1.32×10^{3}	1.48×10^{3}	1.65×10^{3}
	STK/STK-M	Push	-	1.96×10^{2}	2.95×10^{2}	3.93×10^{2}	5.89×10^{2}	7.85×10^{2}	9.82×10^{2}	1.18×10^{3}	1.37×10^{3}	1.57×10^{3}	1.77×10^{3}	1.96×10^{3}
		Pull	-	1.26×10^{2}	1.88×10^{2}	2.51×10^{2}	3.77×10^{2}	5.03×10^{2}	6.28×10^{2}	7.54×10^{2}	8.80×10^{2}	1.01×10^{3}	1.13×10^{3}	1.26×10^{3}
	STK-Y1/ STK-MY1	Push	-	1.96×10^{2}	2.95×10^{2}	3.93×10^{2}	5.89×10^{2}	7.85×10^{2}	9.82×10^{2}	1.18×10^{3}	1.37×10^{3}	1.57×10^{3}	1.77×10^{3}	1.96×10^{3}
		Pull	-	40.9	1.04×10^{2}	1.67×10^{2}	2.92×10^{2}	4.18×10^{2}	5.44×10^{2}	6.69×10^{2}	7.95×10^{2}	9.21×10^{2}	1.05×10^{3}	1.17×10^{3}
	UFCD	Push	-	-	-	3.86×10^{2}	5.80×10^{2}	7.73×10^{2}	9.66×10^{2}	1.16×10^{3}	1.35×10^{3}	-	-	-
		Pull	-	-	-	3.24×10^{2}	4.85×10^{2}	6.47×10^{2}	8.09×10^{2}	9.71×10^{2}	1.13×10^{3}	-	-	-
	MFC-BS	Push	-	-	-	3.93×10^{2}	5.89×10^{2}	7.85×10^{2}	9.82×10^{2}	1.18×10^{3}	1.37×10^{3}	1.57×10^{3}	1.77×10^{3}	1.96×10^{3}
		Pull	-	-	-	3.30×10^{2}	4.95×10^{2}	6.60×10^{2}	8.25×10^{2}	9.90×10^{2}	1.15×10^{3}	1.32×10^{3}	1.48×10^{3}	1.65×10^{3}
	SRT3	Push	-	1.99×10^{2}	2.98×10^{2}	3.98×10^{2}	5.96×10^{2}	7.95×10^{2}	9.94×10^{2}	1.19×10^{3}	1.39×10^{3}	-	-	-
		Pull	-	1.99×10^{2}	2.98×10^{2}	3.98×10^{2}	5.96×10^{2}	7.95×10^{2}	9.94×10^{2}	1.19×10^{3}	1.39×10^{3}	-	-	-
	CAC4/ UCAC2	Push	-	1.96×10^{2}	2.95×10^{2}	3.93×10^{2}	5.89×10^{2}	7.85×10^{2}	9.82×10^{2}	1.18×10^{3}	1.37×10^{3}	1.57×10^{3}	1.77×10^{3}	1.96×10^{3}
		Pull	-	1.65×10^{2}	2.47×10^{2}	3.30×10^{2}	4.95×10^{2}	6.60×10^{2}	8.25×10^{2}	9.90×10^{2}	1.15×10^{3}	1.32×10^{3}	1.48×10^{3}	1.65×10^{3}
	RCS2	Push	-	1.96×10^{2}		3.93×10^{2}	5.89×10^{2}	7.85×10^{2}	9.82×10^{2}	1.18×10^{3}	1.37×10^{3}	1.57×10^{3}	1.77×10^{3}	1.96×10^{3}
		Pull	-	1.65×10^{2}		3.30×10^{2}	4.95×10^{2}	6.60×10^{2}	8.25×10^{2}	9.90×10^{2}	1.15×10^{3}	1.32×10^{3}	1.48×10^{3}	1.65×10^{3}
	RCC2	Push	-	-	-	3.93×10^{2}	5.89×10^{2}	7.85×10^{2}	9.82×10^{2}	1.18×10^{3}	1.37×10^{3}	1.57×10^{3}	1.77×10^{3}	1.96×10^{3}
		Pull	-	-	-	3.30×10^{2}	4.95×10^{2}	6.60×10^{2}	8.25×10^{2}	9.90×10^{2}	1.15×10^{3}	1.32×10^{3}	1.48×10^{3}	1.65×10^{3}

Theoretical thrust table (double acting)

(Unit: N)

Push ←
Pull →

Bore size (mm)	Compatible models	Operating direction	Working pressure MPa 0.05	0.1	0.15	0.2	0.3	0.4	0.5	0.6	0.7	0.8	0.9	1.0
ø50	GLC	Push	-	-	-	3.93×10^{2}	5.89×10^{2}	7.85×10^{2}	9.82×10^{2}	1.18×10^{3}	1.37×10^{3}	1.57×10^{3}	1.77×10^{3}	1.96×10^{3}
		Pull	-	-	-	2.00×10^{2}	3.00×10^{2}	4.01×10^{2}	5.01×10^{2}	6.01×10^{2}	7.01×10^{2}	8.01×10^{2}	9.01×10^{2}	1.00×10^{3}
ø63	SCG/JSG	Push	1.56×10^{2}	3.12×10^{2}	4.68×10^{2}	6.23×10^{2}	9.35×10^{2}	1.25×10^{3}	1.56×10^{3}	1.87×10^{3}	2.18×10^{3}	2.49×10^{3}	2.81×10^{3}	3.12×10^{3}
		Pull	1.40×10^{2}	2.80×10^{2}	4.20×10^{2}	5.61×10^{2}	8.41×10^{2}	1.12×10^{3}	1.40×10^{3}	1.68×10^{3}	1.96×10^{3}	2.24×10^{3}	2.52×10^{3}	2.80×10^{3}
	SCA2/JSC3/HCA/HCM SCM/SSD2/SSD/USC	Push	-	3.12×10^{2}	4.68×10^{2}	6.23×10^{2}	9.35×10^{2}	1.25×10^{3}	1.56×10^{3}	1.87×10^{3}	2.18×10^{3}	2.49×10^{3}	2.81×10^{3}	3.12×10^{3}
		Pull	-	2.80×10^{2}	4.20×10^{2}	5.61×10^{2}	8.41×10^{2}	1.12×10^{3}	1.40×10^{3}	1.68×10^{3}	1.96×10^{3}	2.24×10^{3}	2.52×10^{3}	2.80×10^{3}
	SSG	Push	-	3.12×10^{2}	4.68×10^{2}	6.23×10^{2}	9.35×10^{2}	1.25×10^{3}	1.56×10^{3}	1.87×10^{3}	2.18×10^{3}	2.49×10^{3}	2.81×10^{3}	3.12×10^{3}
		Pull	-	2.80×10^{2}	4.20×10^{2}	5.61×10^{2}	8.41×10^{2}	1.12×10^{3}	1.40×10^{3}	1.68×10^{3}	1.96×10^{3}	2.24×10^{3}	2.52×10^{3}	2.80×10^{3}
	SRL3	Push	-	3.14×10^{2}	4.70×10^{2}	6.27×10^{2}	9.41×10^{2}	1.25×10^{3}	1.57×10^{3}	1.88×10^{3}	2.20×10^{3}	-	-	-
		Pull	-	3.14×10^{2}	4.70×10^{2}	6.27×10^{2}	9.41×10^{2}	1.25×10^{3}	1.57×10^{3}	1.88×10^{3}	2.20×10^{3}	-	-	-
	FCD	Push	-	3.18×10^{2}	4.77×10^{2}	6.36×10^{2}	9.53×10^{2}	1.27×10^{3}	1.59×10^{3}	1.91×10^{3}	2.22×10^{3}	-	-	-
		Pull	-	2.86×10^{2}	4.30×10^{2}	5.73×10^{2}	8.59×10^{2}	1.15×10^{3}	1.43×10^{3}	1.72×10^{3}	2.00×10^{3}	-	-	-
	STG	Push	-	3.12×10^{2}	4.68×10^{2}	6.23×10^{2}	9.35×10^{2}	1.25×10^{3}	1.56×10^{3}	1.87×10^{3}	2.18×10^{3}	2.49×10^{3}	2.81×10^{3}	3.12×10^{3}
		Pull	-	2.80×10^{2}	4.20×10^{2}	5.61×10^{2}	8.41×10^{2}	1.12×10^{3}	1.40×10^{3}	1.68×10^{3}	1.96×10^{3}	2.24×10^{3}	2.52×10^{3}	2.80×10^{3}
	STS/STL	Push	-	3.12×10^{2}	4.68×10^{2}	6.23×10^{2}	9.35×10^{2}	1.25×10^{3}	1.56×10^{3}	1.87×10^{3}	2.18×10^{3}	2.49×10^{3}	2.81×10^{3}	3.12×10^{3}
		Pull	-	2.80×10^{2}	4.20×10^{2}	5.61×10^{2}	8.41×10^{2}	1.12×10^{3}	1.40×10^{3}	1.68×10^{3}	1.96×10^{3}	2.24×10^{3}	2.52×10^{3}	2.80×10^{3}
	UFCD	Push	-	-	-	6.36×10^{2}	9.53×10^{2}	1.27×10^{3}	1.59×10^{3}	1.91×10^{3}	2.22×10^{3}	-	-	-
		Pull	-	-	-	5.73×10^{2}	8.59×10^{2}	1.15×10^{3}	1.43×10^{3}	1.72×10^{3}	2.00×10^{3}	-	-	-
	MFC-BS	Push	-	-	-	6.23×10^{2}	9.35×10^{2}	1.25×10^{3}	1.56×10^{3}	1.87×10^{3}	2.18×10^{3}	2.49×10^{3}	2.81×10^{3}	3.12×10^{3}
		Pull	-	-	-	5.61×10^{2}	8.41×10^{2}	1.12×10^{3}	1.40×10^{3}	1.68×10^{3}	1.96×10^{3}	2.24×10^{3}	2.52×10^{3}	2.80×10^{3}
	SRM3	Push	-	3.14×10^{2}	4.70×10^{2}	6.27×10^{2}	9.41×10^{2}	1.25×10^{3}	1.57×10^{3}	1.88×10^{3}	2.20×10^{3}	-	-	-
		Pull	-	3.14×10^{2}	4.70×10^{2}	6.27×10^{2}	9.41×10^{2}	1.25×10^{3}	1.57×10^{3}	1.88×10^{3}	2.20×10^{3}	-	-	-
	SRT3	Push	-	3.14×10^{2}	4.70×10^{2}	6.27×10^{2}	9.41×10^{2}	1.25×10^{3}	1.57×10^{3}	1.88×10^{3}	2.20×10^{3}	-	-	-
		Pull	-	3.14×10^{2}	4.70×10^{2}	6.27×10^{2}	9.41×10^{2}	1.25×10^{3}	1.57×10^{3}	1.88×10^{3}	2.20×10^{3}	-	-	-
	CAC4/UCAC2	Push	-	3.12×10^{2}	4.68×10^{2}	6.23×10^{2}	9.35×10^{2}	1.25×10^{3}	1.56×10^{3}	1.87×10^{3}	2.18×10^{3}	2.49×10^{3}	2.81×10^{3}	3.12×10^{3}
		Pull	-	2.80×10^{2}	4.20×10^{2}	5.61×10^{2}	8.41×10^{2}	1.12×10^{3}	1.40×10^{3}	1.68×10^{3}	1.96×10^{3}	2.24×10^{3}	2.52×10^{3}	2.80×10^{3}
	RCS2	Push	-	3.12×10^{2}	-	6.23×10^{2}	9.35×10^{2}	1.25×10^{3}	1.56×10^{3}	1.87×10^{3}	-	-	-	-
		Pull	-	2.80×10^{2}	-	5.61×10^{2}	8.41×10^{2}	1.12×10^{3}	1.40×10^{3}	1.68×10^{3}	-	-	-	-
	RCC2	Push	-	-	-	6.23×10^{2}	9.35×10^{2}	1.25×10^{3}	1.56×10^{3}	1.87×10^{3}	2.18×10^{3}	2.49×10^{3}	2.81×10^{3}	3.12×10^{3}
		Pull	-	-	-	5.25×10^{2}	7.88×10^{2}	1.05×10^{3}	1.31×10^{3}	1.58×10^{3}	1.84×10^{3}	2.10×10^{3}	2.36×10^{3}	2.63×10^{3}
	GLC	Push	-	-	-	6.23×10^{2}	9.35×10^{2}	1.25×10^{3}	1.56×10^{3}	1.87×10^{3}	2.18×10^{3}	2.49×10^{3}	2.81×10^{3}	3.12×10^{3}
		Pull	-	-	-	3.72×10^{2}	5.58×10^{2}	7.44×10^{2}	9.30×10^{2}	1.12×10^{3}	1.30×10^{3}	1.49×10^{3}	1.67×10^{3}	1.86×10^{3}
ø75	CAV2/COV2	Push	-	-	-	8.84×10^{2}	1.33×10^{3}	1.77×10^{3}	2.21×10^{3}	2.65×10^{3}	3.09×10^{3}	-	-	-
		Pull	-	-	-	7.85×10^{2}	1.18×10^{3}	1.57×10^{3}	1.96×10^{3}	2.36×10^{3}	2.75×10^{3}	-	-	-
ø80	SCG/JSG	Push	2.51×10^{2}	5.03×10^{2}	7.54×10^{2}	1.01×10^{3}	1.51×10^{3}	2.01×10^{3}	2.51×10^{3}	3.02×10^{3}	3.52×10^{3}	4.02×10^{3}	4.52×10^{3}	5.03×10^{3}
		Pull	2.27×10^{2}	4.54×10^{2}	6.80×10^{2}	9.07×10^{2}	1.36×10^{3}	1.81×10^{3}	2.27×10^{3}	2.72×10^{3}	3.17×10^{3}	3.63×10^{3}	4.08×10^{3}	4.54×10^{3}
	SCA2/JSC3/HCA SCM/SSD2/SSD/USC	Push	-	5.03×10^{2}	7.54×10^{2}	1.01×10^{3}	1.51×10^{3}	2.01×10^{3}	2.51×10^{3}	3.02×10^{3}	3.52×10^{3}	4.02×10^{3}	4.52×10^{3}	5.03×10^{3}
		Pull	-	4.54×10^{2}	6.80×10^{2}	9.07×10^{2}	1.36×10^{3}	1.81×10^{3}	2.27×10^{3}	2.72×10^{3}	3.17×10^{3}	3.63×10^{3}	4.08×10^{3}	4.54×10^{3}
	SSG	Push	-	5.03×10^{2}	7.54×10^{2}	1.01×10^{3}	1.51×10^{3}	2.01×10^{3}	2.51×10^{3}	3.02×10^{3}	3.52×10^{3}	4.02×10^{3}	4.52×10^{3}	5.03×10^{3}
		Pull	-	4.54×10^{2}	6.80×10^{2}	9.07×10^{2}	1.36×10^{3}	1.81×10^{3}	2.27×10^{3}	2.72×10^{3}	3.17×10^{3}	3.63×10^{3}	4.08×10^{3}	4.54×10^{3}
	SRL3	Push	-	5.06×10^{2}	7.60×10^{2}	1.01×10^{3}	1.52×10^{3}	2.03×10^{3}	2.53×10^{3}	3.04×10^{3}	3.54×10^{3}	-	-	-
		Pull	-	5.06×10^{2}	7.60×10^{2}	1.01×10^{3}	1.52×10^{3}	2.03×10^{3}	2.53×10^{3}	3.04×10^{3}	3.54×10^{3}	-	-	-
	STG	Push	-	5.03×10^{2}	7.54×10^{2}	1.01×10^{3}	1.51×10^{3}	2.01×10^{3}	2.51×10^{3}	3.02×10^{3}	3.52×10^{3}	4.02×10^{3}	4.52×10^{3}	5.03×10^{3}
		Pull	-	4.54×10^{2}	6.80×10^{2}	9.07×10^{2}	1.36×10^{3}	1.81×10^{3}	2.27×10^{3}	2.72×10^{3}	3.17×10^{3}	3.63×10^{3}	4.08×10^{3}	4.54×10^{3}
	STS/STL	Push	-	5.03×10^{2}	7.54×10^{2}	1.01×10^{3}	1.51×10^{3}	2.01×10^{3}	2.51×10^{3}	3.02×10^{3}	3.52×10^{3}	4.02×10^{3}	4.52×10^{3}	5.03×10^{3}
		Pull	-	4.54×10^{2}	6.80×10^{2}	9.07×10^{2}	1.36×10^{3}	1.81×10^{3}	2.27×10^{3}	2.72×10^{3}	3.17×10^{3}	3.63×10^{3}	4.08×10^{3}	4.54×10^{3}
	MFC-BS	Push	-	-	-	1.01×10^{3}	1.51×10^{3}	2.01×10^{3}	2.51×10^{3}	3.02×10^{3}	3.52×10^{3}	4.02×10^{3}	4.52×10^{3}	5.03×10^{3}
		Pull	-	-	-	9.07×10^{2}	1.36×10^{3}	1.81×10^{3}	2.27×10^{3}	2.72×10^{3}	3.17×10^{3}	3.63×10^{3}	4.08×10^{3}	4.54×10^{3}
	CAC4	Push	-	5.03×10^{2}	7.54×10^{2}	1.01×10^{3}	1.51×10^{3}	2.01×10^{3}	2.51×10^{3}	3.02×10^{3}	3.52×10^{3}	4.02×10^{3}	4.52×10^{3}	5.03×10^{3}
		Pull	-	4.54×10^{2}	6.80×10^{2}	9.07×10^{2}	1.36×10^{3}	1.81×10^{3}	2.27×10^{3}	2.72×10^{3}	3.17×10^{3}	3.63×10^{3}	4.08×10^{3}	4.54×10^{3}
	GLC	Push	-	-	-	1.01×10^{3}	1.51×10^{3}	2.01×10^{3}	2.51×10^{3}	3.02×10^{3}	3.52×10^{3}	4.02×10^{3}	4.52×10^{3}	5.03×10^{3}
		Pull	-	-	-	6.13×10^{2}	9.19×10^{2}	1.23×10^{3}	1.53×10^{3}	1.84×10^{3}	2.14×10^{3}	2.45×10^{3}	2.76×10^{3}	3.06×10^{3}
ø100	CAV2/COV2	Push	-	-	-	1.57×10^{3}	2.36×10^{3}	3.14×10^{3}	3.93×10^{3}	4.71×10^{3}	5.50×10^{3}	-	-	-
		Pull	-	-	-	1.47×10^{3}	2.21×10^{3}	2.95×10^{3}	3.68×10^{3}	4.42×10^{3}	5.15×10^{3}	-	-	-
	SCG/JSG	Push	3.93×10^{2}	7.85×10^{2}	1.18×10^{3}	1.57×10^{3}	2.36×10^{3}	3.14×10^{3}	3.93×10^{3}	4.71×10^{3}	5.50×10^{3}	6.28×10^{3}	7.07×10^{3}	7.85×10^{3}
		Pull	3.57×10^{2}	7.15×10^{2}	1.07×10^{3}	1.43×10^{3}	2.14×10^{3}	2.86×10^{3}	3.57×10^{3}	4.29×10^{3}	5.00×10^{3}	5.72×10^{3}	6.43×10^{3}	7.15×10^{3}
	SCA2/JSC3/HCA SCM/SSD2/SSD/USC	Push	-	7.85×10^{2}	1.18×10^{3}	1.57×10^{3}	2.36×10^{3}	3.14×10^{3}	3.93×10^{3}	4.71×10^{3}	5.50×10^{3}	6.28×10^{3}	7.07×10^{3}	7.85×10^{3}
		Pull	-	7.15×10^{2}	1.07×10^{3}	1.43×10^{3}	2.14×10^{3}	2.86×10^{3}	3.57×10^{3}	4.29×10^{3}	5.00×10^{3}	5.72×10^{3}	6.43×10^{3}	7.15×10^{3}
	SSG	Push	-	7.85×10^{2}	1.18×10^{3}	1.57×10^{3}	2.36×10^{3}	3.14×10^{3}	3.93×10^{3}	4.71×10^{3}	5.50×10^{3}	6.28×10^{3}	7.07×10^{3}	7.85×10^{3}
		Pull	-	7.15×10^{2}	1.07×10^{3}	1.43×10^{3}	2.14×10^{3}	2.86×10^{3}	3.57×10^{3}	4.29×10^{3}	5.00×10^{3}	5.72×10^{3}	6.43×10^{3}	7.15×10^{3}
	SRL3	Push	-	7.91×10^{2}	1.19×10^{3}	1.58×10^{3}	2.37×10^{3}	3.16×10^{3}	3.95×10^{3}	4.74×10^{3}	5.53×10^{3}	-	-	-
		Pull	-	7.91×10^{2}	1.19×10^{3}	1.58×10^{3}	2.37×10^{3}	3.16×10^{3}	3.95×10^{3}	4.74×10^{3}	5.53×10^{3}	-	-	-
	STG	Push	-	7.85×10^{2}	1.18×10^{3}	1.57×10^{3}	2.36×10^{3}	3.14×10^{3}	3.93×10^{3}	4.71×10^{3}	5.50×10^{3}	6.28×10^{3}	7.07×10^{3}	7.85×10^{3}
		Pull	-	7.15×10^{2}	1.07×10^{3}	1.43×10^{3}	2.14×10^{3}	2.86×10^{3}	3.57×10^{3}	4.29×10^{3}	5.00×10^{3}	5.72×10^{3}	6.43×10^{3}	7.15×10^{3}
	STS/STL	Push	-	7.85×10^{2}	1.18×10^{3}	1.57×10^{3}	2.36×10^{3}	3.14×10^{3}	3.93×10^{3}	4.71×10^{3}	5.50×10^{3}	6.28×10^{3}	7.07×10^{3}	7.85×10^{3}
		Pull	-	7.15×10^{2}	1.07×10^{3}	1.43×10^{3}	2.14×10^{3}	2.86×10^{3}	3.57×10^{3}	4.29×10^{3}	5.00×10^{3}	5.72×10^{3}	6.43×10^{3}	7.15×10^{3}
	GLC	Push	-	-	-	1.57×10^{3}	2.36×10^{3}	3.14×10^{3}	3.93×10^{3}	4.71×10^{3}	5.50×10^{3}	6.28×10^{3}	7.07×10^{3}	7.85×10^{3}
		Pull	-	-	-	1.01×10^{3}	1.51×10^{3}	2.01×10^{3}	2.51×10^{3}	3.02×10^{3}	3.52×10^{3}	4.02×10^{3}	4.52×10^{3}	5.03×10^{3}
ø125	SCS2/JSC4 SSD	Push	-	1.23×10^{3}	1.84×10^{3}	2.45×10^{3}	3.68×10^{3}	4.91×10^{3}	6.14×10^{3}	7.36×10^{3}	8.59×10^{3}	9.82×10^{3}	1.10×10^{4}	1.23×10^{4}
		Pull	-	1.13×10^{3}	1.70×10^{3}	2.26×10^{3}	3.39×10^{3}	4.52×10^{3}	5.65×10^{3}	6.79×10^{3}	7.92×10^{3}	9.05×10^{3}	1.02×10^{4}	1.13×10^{4}
ø140	SCS2/JSC4 SSD	Push	-	1.54×10^{3}	2.31×10^{3}	3.08×10^{3}	4.62×10^{3}	6.16×10^{3}	7.70×10^{3}	9.24×10^{3}	1.08×10^{4}	1.23×10^{4}	1.39×10^{4}	1.54×10^{4}
		Pull	-	1.44×10^{3}	2.16×10^{3}	2.89×10^{3}	4.33×10^{3}	5.77×10^{3}	7.22×10^{3}	8.66×10^{3}	1.01×10^{4}	1.15×10^{4}	1.30×10^{4}	1.44×10^{4}
ø160	SCS2/JSC4 SSD	Push	-	2.01×10^{3}	3.02×10^{3}	4.02×10^{3}	6.03×10^{3}	8.04×10^{3}	1.01×10^{4}	1.21×10^{4}	1.41×10^{4}	1.61×10^{4}	1.81×10^{4}	2.01×10^{4}
		Pull	-	1.88×10^{3}	2.83×10^{3}	3.77×10^{3}	5.65×10^{3}	7.54×10^{3}	9.42×10^{3}	1.13×10^{4}	1.32×10^{4}	1.51×10^{4}	1.70×10^{4}	1.88×10^{4}
ø180	SCS2/JSC4	Push	-	2.54×10^{3}	3.82×10^{3}	5.09×10^{3}	7.63×10^{3}	1.02×10^{4}	1.27×10^{4}	1.53×10^{4}	1.78×10^{4}	2.04×10^{4}	2.29×10^{4}	2.54×10^{4}
		Pull	-	2.39×10^{3}	3.58×10^{3}	4.77×10^{3}	7.16×10^{3}	9.54×10^{3}	1.19×10^{4}	1.43×10^{4}	1.67×10^{4}	1.91×10^{4}	2.15×10^{4}	2.39×10^{4}
ø200	SCS2	Push	-	3.14×10^{3}	4.71×10^{3}	6.28×10^{3}	9.42×10^{3}	1.26×10^{4}	1.57×10^{4}	1.88×10^{4}	2.20×10^{4}	2.51×10^{4}	2.83×10^{4}	3.14×10^{4}
		Pull	-	2.95×10^{3}	4.42×10^{3}	5.89×10^{3}	8.84×10^{3}	1.18×10^{4}	1.47×10^{4}	1.77×10^{4}	2.06×10^{4}	2.36×10^{4}	2.65×10^{4}	2.95×10^{4}
ø250	SCS2	Push	-	4.91×10^{3}	7.36×10^{3}	9.82×10^{3}	1.47×10^{4}	1.96×10^{4}	2.45×10^{4}	2.95×10^{4}	3.44×10^{4}	3.93×10^{4}	4.42×10^{4}	4.91×10^{4}
		Pull	-	4.63×10^{3}	6.94×10^{3}	9.25×10^{3}	1.39×10^{4}	1.85×10^{4}	2.31×10^{4}	2.78×10^{4}	3.24×10^{4}	3.70×10^{4}	4.16×10^{4}	4.63×10^{4}

Theoretical thrust table (double acting)

(Unit: N)

Push ←
Pull →

	Bore size (mm)	Operating direction	Piston position	Working pressure MPa 0.2	0.3	0.4	0.5	0.6	0.7	0.8	0.9	1.0
SHC	ø40	Push	Thrust	$2.51x10^2$	$3.76x10^2$	$5.02x10^2$	$6.28x10^2$	$7.53x10^2$	$8.79x10^2$	$1.0x10^3$	$1.13x10^3$	-
			Booster	$5.2x10^2$	$7.8x10^2$	$1.04x10^3$	$1.30x10^3$	$1.56x10^3$	$1.82x10^3$	$2.08x10^3$	$2.34x10^3$	-
		Pull	Thrust	$1.28x10^2$	$1.92x10^2$	$2.56x10^2$	$3.20x10^2$	$3.84x10^2$	$4.48x10^2$	$5.12x10^2$	$5.76x10^2$	-
			Booster	$3.97x10^2$	$5.96x10^2$	$7.95x10^2$	$9.94x10^2$	$1.19x10^3$	$1.39x10^3$	$1.59x10^3$	$1.79x10^3$	-
	ø50	Push	Thrust	$3.92x10^2$	$5.88x10^2$	$7.85x10^2$	$9.81x10^2$	$1.18x10^3$	$1.37x10^3$	$1.57x10^3$	$1.77x10^3$	-
			Booster	$8.55x10^2$	$1.28x10^3$	$1.71x10^3$	$2.14x10^3$	$2.57x10^3$	$2.99x10^3$	$3.42x10^3$	$3.85x10^3$	-
		Pull	Thrust	$2.31x10^2$	$3.47x10^2$	$4.63x10^2$	$5.79x10^2$	$6.95x10^2$	$8.11x10^2$	$9.27x10^2$	$1.04x10^3$	-
			Booster	$6.94x10^2$	$1.04x10^3$	$1.39x10^3$	$1.74x10^3$	$2.08x10^3$	$2.43x10^3$	$2.78x10^3$	$3.12x10^3$	-
	ø63	Push	Thrust	$6.23x10^2$	$9.35x10^2$	$1.25x10^3$	$1.56x10^3$	$1.87x10^3$	$2.18x10^3$	$2.49x10^3$	$2.81x10^3$	-
			Booster	$1.26x10^3$	$1.88x10^3$	$2.51x10^3$	$3.14x10^3$	$3.77x10^3$	$4.39x10^3$	$5.02x10^3$	$5.65x10^3$	-
		Pull	Thrust	$3.72x10^2$	$5.58x10^2$	$7.44x10^2$	$9.30x10^2$	$1.12x10^3$	$1.30x10^3$	$1.49x10^3$	$1.67x10^3$	-
			Booster	$1.04x10^3$	$1.51x10^3$	$2.01x10^3$	$2.51x10^3$	$3.01x10^3$	$3.52x10^3$	$4.02x10^3$	$4.52x10^3$	-
	ø80	Push	Thrust	$1.01x10^3$	$1.51x10^3$	$2.01x10^3$	$2.51x10^3$	$3.02x10^3$	$3.52x10^3$	$4.02x10^3$	$4.52x10^3$	-
			Booster	$1.88x10^3$	$2.82x10^3$	$3.77x10^3$	$4.71x10^3$	$5.65x10^3$	$6.59x10^3$	$7.53x10^3$	$8.47x10^3$	-
		Pull	Thrust	$6.12x10^2$	$9.18x10^2$	$1.23x10^3$	$1.53x10^3$	$1.84x10^3$	$2.14x10^3$	$2.45x10^3$	$2.76x10^3$	-
			Booster	$1.49x10^3$	$2.24x10^3$	$2.98x10^3$	$3.73x10^3$	$4.47x10^3$	$5.22x10^3$	$5.96x10^3$	$6.71x10^3$	-
	ø100	Push	Thrust	$1.57x10^3$	$2.36x10^3$	$3.14x10^3$	$3.93x10^3$	$4.71x10^3$	$5.5x10^3$	$6.28x10^3$	$7.07x10^3$	-
			Booster	$2.91x10^3$	$4.36x10^3$	$5.81x10^3$	$7.26x10^3$	$8.72x10^3$	$1.02x10^4$	$1.16x10^4$	$1.31x10^4$	-
		Pull	Thrust	$1.01x10^3$	$1.51x10^3$	$2.01x10^3$	$2.51x10^3$	$3.02x10^3$	$3.52x10^3$	$4.02x10^3$	$4.52x10^3$	-
			Booster	$2.34x10^3$	$3.51x10^3$	$4.68x10^3$	$5.85x10^3$	$7.02x10^3$	$8.19x10^3$	$9.36x10^3$	$1.05x10^4$	-
SHC-K	ø40	Push	Thrust	$2.51x10^2$	$3.76x10^2$	$5.02x10^2$	$6.28x10^2$	$7.53x10^2$	$8.79x10^2$	$1.0x10^3$	$1.13x10^3$	-
			Booster	$1.13x10^3$	$1.70x10^3$	$2.27x10^3$	$2.83x10^3$	$3.40x10^3$	$3.97x10^3$	$4.53x10^3$	$5.10x10^3$	-
		Pull	Thrust	$1.28x10^2$	$1.92x10^2$	$2.56x10^2$	$3.20x10^2$	$3.84x10^2$	$4.48x10^2$	$5.12x10^2$	$5.76x10^2$	-
			Booster	$1.01x10^3$	$1.52x10^3$	$2.02x10^3$	$2.53x10^3$	$3.03x10^3$	$3.54x10^3$	$4.04x10^3$	$4.55x10^3$	-
	ø50	Push	Thrust	$3.92x10^2$	$5.88x10^2$	$7.85x10^2$	$9.81x10^2$	$1.18x10^3$	$1.37x10^3$	$1.57x10^3$	$1.77x10^3$	-
			Booster	$1.80x10^3$	$2.70x10^3$	$3.60x10^3$	$4.51x10^3$	$5.41x10^3$	$6.31x10^3$	$7.21x10^3$	$8.11x10^3$	-
		Pull	Thrust	$2.31x10^2$	$3.47x10^2$	$4.63x10^2$	$5.79x10^2$	$6.95x10^2$	$8.11x10^2$	$9.27x10^2$	$1.04x10^3$	-
			Booster	$1.64x10^3$	$2.46x10^3$	$3.28x10^3$	$4.10x10^3$	$4.92x10^3$	$5.75x10^3$	$6.57x10^3$	$7.39x10^3$	-
	ø63	Push	Thrust	$6.23x10^2$	$9.35x10^2$	$1.25x10^3$	$1.56x10^3$	$1.87x10^3$	$2.18x10^3$	$2.49x10^3$	$2.81x10^3$	-
			Booster	$2.83x10^3$	$4.24x10^3$	$5.65x10^3$	$7.07x10^3$	$8.48x10^3$	$9.89x10^3$	$1.13x10^4$	$1.27x10^4$	-
		Pull	Thrust	$3.72x10^2$	$5.58x10^2$	$7.44x10^2$	$9.30x10^2$	$1.12x10^3$	$1.30x10^3$	$1.49x10^3$	$1.67x10^3$	-
			Booster	$2.58x10^3$	$3.86x10^3$	$5.15x10^3$	$6.44x10^3$	$7.73x10^3$	$9.01x10^3$	$1.03x10^4$	$1.16x10^4$	-
	ø80	Push	Thrust	$1.01x10^3$	$1.51x10^3$	$2.01x10^3$	$2.51x10^3$	$3.02x10^3$	$3.52x10^3$	$4.02x10^3$	$4.52x10^3$	-
			Booster	$4.63x10^3$	$6.95x10^3$	$9.27x10^3$	$1.16x10^4$	$1.39x10^4$	$1.62x10^4$	$1.85x10^4$	$2.09x10^4$	-
		Pull	Thrust	$6.12x10^2$	$9.18x10^2$	$1.23x10^3$	$1.53x10^3$	$1.84x10^3$	$2.14x10^3$	$2.45x10^3$	$2.76x10^3$	-
			Booster	$4.24x10^3$	$6.36x10^3$	$8.48x10^3$	$1.06x10^4$	$1.27x10^4$	$1.48x10^4$	$1.70x10^4$	$1.91x10^4$	-
	ø100	Push	Thrust	$1.57x10^3$	$2.36x10^3$	$3.14x10^3$	$3.93x10^3$	$4.71x10^3$	$5.50x10^3$	$6.28x10^3$	$7.07x10^3$	-
			Booster	$7.29x10^3$	$1.09x10^4$	$1.46x10^4$	$1.82x10^4$	$2.19x10^4$	$2.55x10^4$	$2.91x10^4$	$3.28x10^4$	-
		Pull	Thrust	$1.01x10^3$	$1.51x10^3$	$2.01x10^3$	$2.51x10^3$	$3.02x10^3$	$3.52x10^3$	$4.02x10^3$	$4.52x10^3$	-
			Booster	$6.72x10^3$	$1.01x10^4$	$1.34x10^4$	$1.68x10^4$	$2.02x10^4$	$2.35x10^4$	$2.69x10^4$	$3.02x10^4$	-

Note: When the booster section is pulled (backward), due to product structure, theoretical thrust is reduced to approximately 70%.

Theoretical thrust table (single acting push) Thrust during push

(Unit: N)

Bore size (mm)	Compatible models	Push ← Working pressure MPa 0.2	0.3	0.4	0.5	0.6	0.7	0.8	0.9	1.0
ø2.5	SCPS	-	-	0.793	1.28	1.78	2.27	2.76	3.25	3.74
ø4		-	-	2.19	3.44	4.70	5.96	7.21	8.47	9.73
ø6	SCPS3	-	4.8	7.6	10.4	13.3	16.1	18.9	21.7	24.6
ø10		8.2	16.1	23.9	31.8	39.6	47.5	55.3	63.2	71.0
ø16		25.3	45.4	65.5	85.6	105.7	125.8	145.9	166.1	186.2
ø6	MSD-X	-	3.58	6.41	9.24	12.1	14.9	17.7	20.5	23.4
ø8		-	8.22	13.2	18.3	23.3	28.3	33.4	38.4	43.4
ø6	SMG-X	-	4.68	7.51	10.3	13.2	16.0	-	-	-
ø10		7.71	15.6	23.4	31.3	39.1	47.0	-	-	-
ø16		24.2	44.3	64.4	84.5	$1.05x10^2$	$1.25x10^2$	-	-	-
ø20		43.8	75.2	$1.07x10^2$	$1.38x10^2$	$1.69x10^2$	$2.01x10^2$	-	-	-
ø25		73.2	$1.22x10^2$	$1.71x10^2$	$2.20x10^2$	$2.70x10^2$	$3.19x10^2$	-	-	-
ø32		$1.31x10^2$	$2.11x10^2$	$2.92x10^2$	$3.72x10^2$	$4.53x10^2$	$5.33x10^2$	-	-	-
ø25	FCS	-	$1.12x10^2$	$1.62x10^2$	$2.11x10^2$	$2.60x10^2$	$3.09x10^2$	-	-	-
ø32		-	$1.85x10^2$	$2.63x10^2$	$3.41x10^2$	$4.18x10^2$	$4.96x10^2$	-	-	-
ø40		$2.11x10^2$	$3.40x10^2$	$4.69x10^2$	$5.98x10^2$	$7.27x10^2$	$8.56x10^2$	-	-	-
ø50		$3.11x10^2$	$5.05x10^2$	$6.98x10^2$	$8.91x10^2$	$1.08x10^3$	$1.28x10^3$	-	-	-
ø63		$5.16x10^2$	$8.34x10^2$	$1.15x10^3$	$1.47x10^3$	$1.79x10^3$	$2.10x10^3$	-	-	-
ø12	SSD2-X/ SSD-X	8.9	20.2	31.5	42.8	54.2	65.5	76.8	88.1	99.4
ø16		25.1	45.2	65.3	85.4	$1.06x10^2$	$1.26x10^2$	$1.46x10^2$	$1.66x10^2$	$1.86x10^2$
ø20		38.8	70.2	$1.02x10^2$	$1.33x10^2$	$1.64x10^2$	$1.96x10^2$	$2.27x10^2$	$2.59x10^2$	$2.90x10^2$
ø25		74.7	$1.24x10^2$	$1.73x10^2$	$2.22x10^2$	$2.71x10^2$	$3.20x10^2$	$3.69x10^2$	$4.18x10^2$	$4.67x10^2$
ø32		$1.32x10^2$	$2.13x10^2$	$2.93x10^2$	$3.74x10^2$	$4.54x10^2$	$5.34x10^2$	$6.15x10^2$	$6.95x10^2$	$7.76x10^2$
ø40		$2.13x10^2$	$3.39x10^2$	$4.64x10^2$	$5.90x10^2$	$7.16x10^2$	$8.41x10^2$	$9.67x10^2$	$1.09x10^3$	$1.22x10^3$
ø50		$3.45x10^2$	$5.41x10^2$	$7.37x10^2$	$9.34x10^2$	$1.13x10^3$	$1.33x10^3$	$1.52x10^3$	$1.72x10^3$	$1.92x10^3$

Theoretical thrust table (single acting pull) Thrust during pull

(Unit: N)

Bore size (mm)	Compatible models	Pull → Working pressure MPa 0.2	0.3	0.4	0.5	0.6	0.7	0.8	0.9	1.0
ø6	SCPH3	-	-	4.8	6.9	9.0	11.1	13.3	15.4	17.5
ø10		5.7	12.3	18.9	25.5	32.1	38.7	45.3	51.9	58.5
ø16		21.4	38.5	57.7	75.8	94.0	112.1	130.2	148.4	166.5
ø6	MSD-Y	-	-	1.38	2.95	4.52	6.10	7.67	9.24	10.8
ø8		-	2.33	5.39	8.46	11.5	14.6	17.6	20.7	23.8
ø6	SMG-Y	-	2.56	4.68	6.80	8.92	11.0	-	-	-
ø10		5.19	11.8	18.4	25.0	31.6	38.2	-	-	-
ø16		18.6	35.8	53.1	70.4	87.7	$1.05x10^2$	-	-	-
ø20		33.8	60.2	86.6	$1.13x10^2$	$1.39x10^2$	$1.66x10^2$	-	-	-
ø25		57.5	98.7	$1.40x10^2$	$1.81x10^2$	$2.22x10^2$	$2.64x10^2$	-	-	-
ø32		$1.08x10^2$	$1.77x10^2$	$2.46x10^2$	$3.16x10^2$	$3.85x10^2$	$4.54x10^2$	-	-	-
ø25	FCH	-	78.5	$1.16x10^2$	$1.54x10^2$	$1.92x10^2$	$2.30x10^2$	-	-	-
ø32		-	$1.25x10^2$	$1.83x10^2$	$2.40x10^2$	$2.98x10^2$	$3.55x10^2$	-	-	-
ø40		$1.70x10^2$	$2.79x10^2$	$3.88x10^2$	$4.97x10^2$	$6.06x10^2$	$7.15x10^2$	-	-	-
ø50		$2.49x10^2$	$4.10x10^2$	$5.72x10^2$	$7.34x10^2$	$8.96x10^2$	$1.06x10^3$	-	-	-
ø63		$4.53x10^2$	$7.39x10^2$	$1.03x10^3$	$1.31x10^3$	$1.60x10^3$	$1.88x10^3$	-	-	-
ø20	STK-Y/ STK-MY	-	45.6	65.7	85.8	$1.06x10^2$	$1.26x10^2$	$1.46x10^2$	$1.66x10^2$	$1.86x10^2$
ø32		66.6	$1.16x10^2$	$1.65x10^2$	$2.14x10^2$	$2.63x10^2$	$3.12x10^2$	$3.61x10^2$	$4.10x10^2$	$4.59x10^2$
ø40		$1.09x10^2$	$1.85x10^2$	$2.62x10^2$	$3.38x10^2$	$4.15x10^2$	$4.92x10^2$	$5.68x10^2$	$6.45x10^2$	$7.21x10^2$
ø50		$1.67x10^2$	$2.92x10^2$	$4.18x10^2$	$5.44x10^2$	$6.69x10^2$	$7.95x10^2$	$9.21x10^2$	$1.05x10^3$	$1.17x10^3$

Bore size (mm)	Compatible models	Stroke mm 5	10	5	10	5	10	5	10	5	10	5	10	5	10	5	10	5	10
ø12	SSD2-Y/ SSD-Y	5.96	5.66	14.4	14.1	22.9	22.6	31.4	31.1	39.9	39.6	48.4	48.1	56.9	56.6	65.3	65.0	73.8	73.5
ø16		17.0	17.0	32.0	32.0	47.1	47.1	62.2	62.2	77.3	77.3	92.4	92.4	$1.07x10^2$	$1.07x10^2$	$1.23x10^2$	$1.23x10^2$	$1.38x10^2$	$1.38x10^2$
ø20		16.7	16.8	40.3	40.4	63.8	63.9	87.4	87.5	$1.11x10^2$	$1.11x10^2$	$1.35x10^2$	$1.35x10^2$	$1.58x10^2$	$1.58x10^2$	$1.82x10^2$	$1.82x10^2$	$2.05x10^2$	$2.05x10^2$
ø25		49.1	49.1	86.8	86.8	$1.25x10^2$	$1.25x10^2$	$1.62x10^2$	$1.62x10^2$	$2.00x10^2$	$2.00x10^2$	$2.38x10^2$	$2.38x10^2$	$2.76x10^2$	$2.76x10^2$	$3.13x10^2$	$3.13x10^2$	$3.51x10^2$	$3.51x10^2$
ø32		93.6	93.2	$1.54x10^2$	$1.54x10^2$	$2.14x10^2$	$2.14x10^2$	$2.75x10^2$	$2.74x10^2$	$3.35x10^2$	$3.35x10^2$	$3.95x10^2$	$3.95x10^2$	$4.56x10^2$	$4.55x10^2$	$5.16x10^2$	$5.15x10^2$	$5.76x10^2$	$5.76x10^2$
		Stroke mm 10	20	10	20	10	20	10	20	10	20	10	20	10	20	10	20	10	20
ø40	SSD2-Y/ SSD-Y	$1.78x10^2$	$1.71x10^2$	$2.84x10^2$	$2.76x10^2$	$3.89x10^2$	$3.82x10^2$	$4.95x10^2$	$4.88x10^2$	$6.00x10^2$	$5.93x10^2$	$7.06x10^2$	$6.99x10^2$	$8.11x10^2$	$8.04x10^2$	$9.17x10^2$	$9.10x10^2$	$1.02x10^3$	$1.02x10^3$
ø50		$2.46x10^2$	$2.48x10^2$	$4.11x10^2$	$4.13x10^2$	$5.75x10^2$	$5.77x10^2$	$7.40x10^2$	$7.42x10^2$	$9.05x10^2$	$9.07x10^2$	$1.07x10^3$	$1.07x10^3$	$1.24x10^3$	$1.24x10^3$	$1.40x10^3$	$1.40x10^3$	$1.57x10^3$	$1.57x10^3$

Cylinder bore size selection nomogram

● In the case of 10 to 100 mm bore and rod push direction.

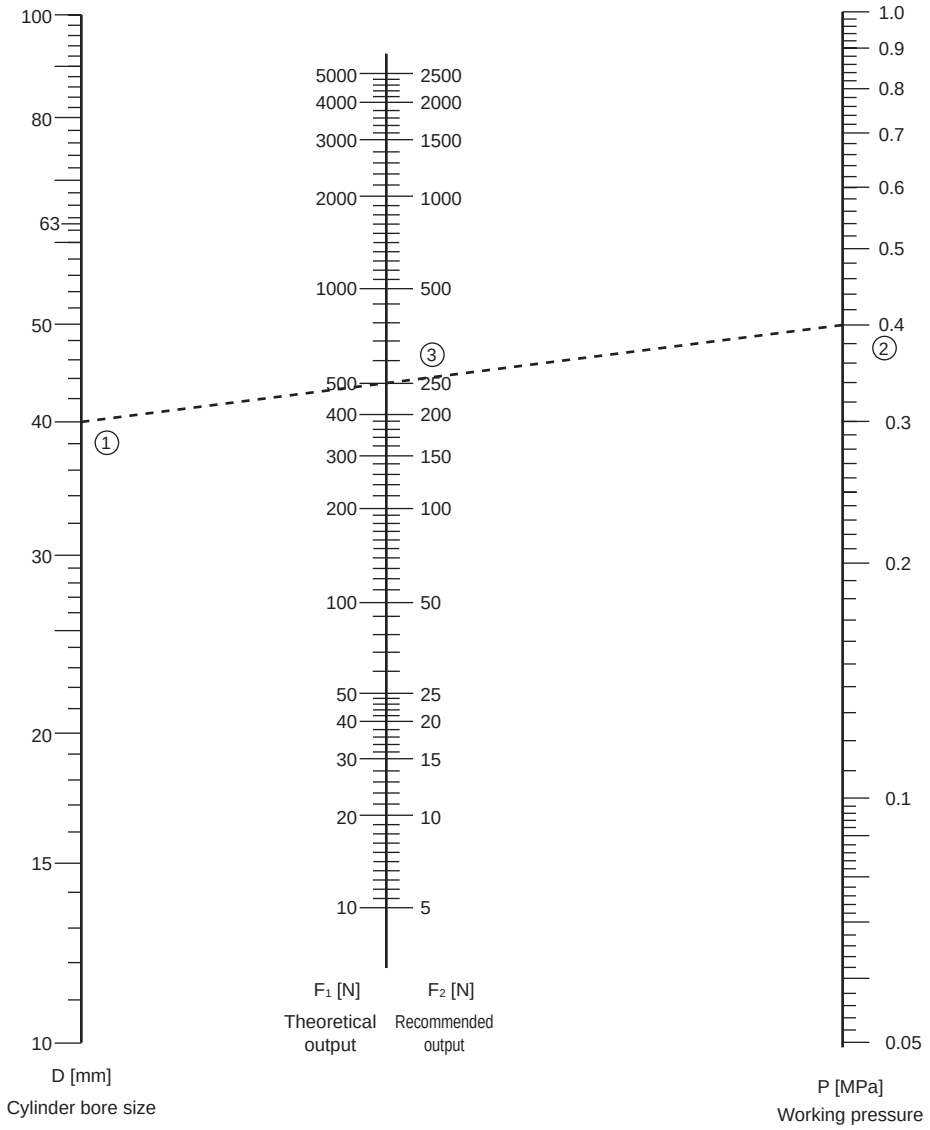

This nomogram was created according to the following formula.

$$F_1 = \frac{\pi}{4} \times D^2/P$$

However, F_1: Theoretical output [N]

F_2: Recommended output (at 50% efficiency) [N]

D : Cylinder bore size [mm]

P : Operating pressure [MPa]

(Example) When operating a ø40 bore cylinder with 0.4 MPa pneumatic pressure, what is the theoretical output?

(Answer) Connect D and P to find the point on F; this leads to the theoretical output F ≈ 500 N.

Cylinder bore size selection nomogram

● In the case of 100 to 250 mm bore and rod push direction.

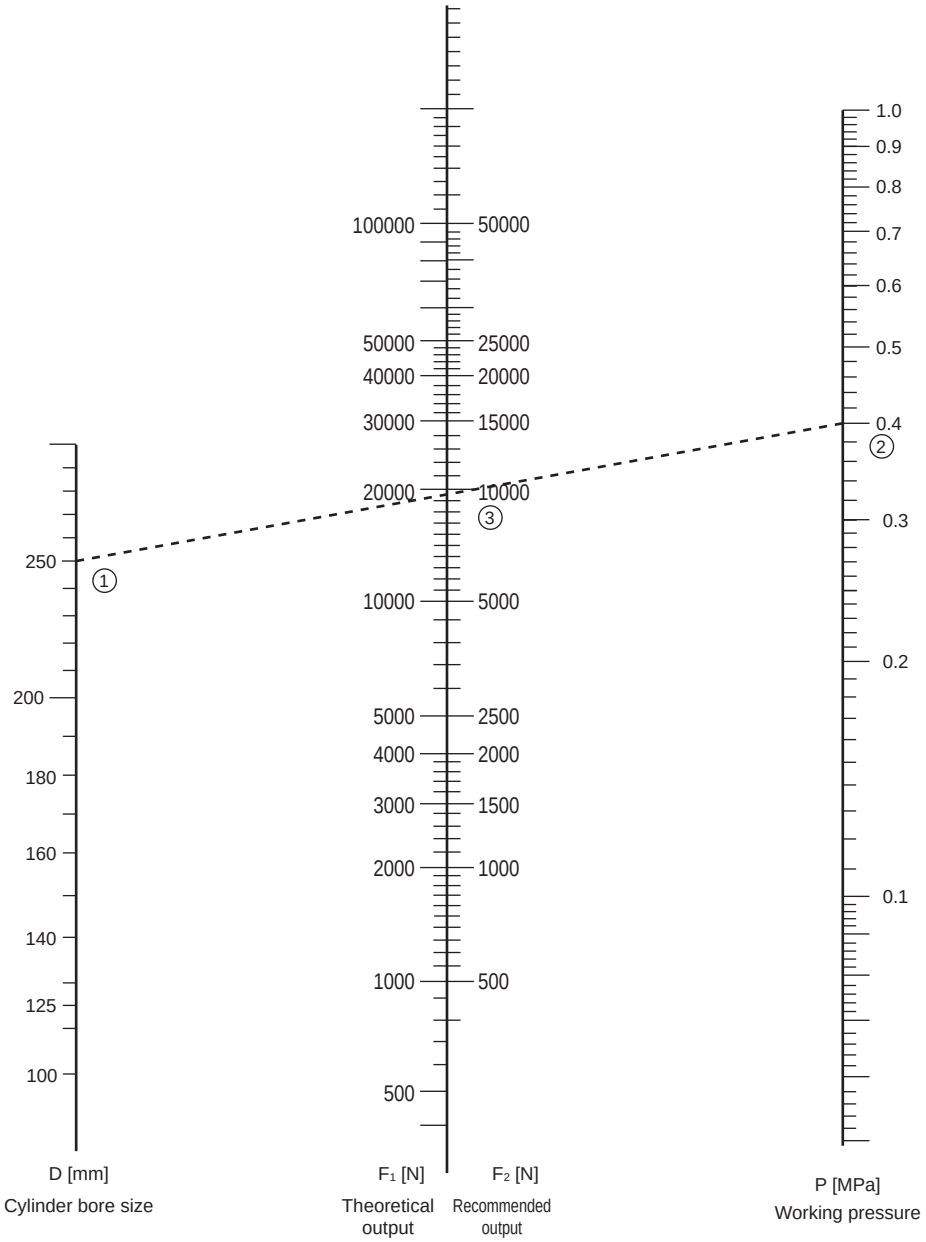

This nomogram was created according to the following formula.

$$F_1 = \frac{\pi}{4} \times D^2/P$$

However, F_1: Theoretical output [N]

F_2: Recommended output (at 50% efficiency) [N]

D: Cylinder bore size [mm]

P: Operating pressure [MPa]

(Example) When operating a ø250 bore cylinder with 0.4 MPa pneumatic pressure, what is the theoretical output?

(Answer) Connect D and P to find the point on F; this leads to the theoretical output F ≈ 19000N.

Required flow rate of cylinder during operation (within bore size 100 mm)

● Q: Required flow rate ℓ/min. per stroke 100 mm

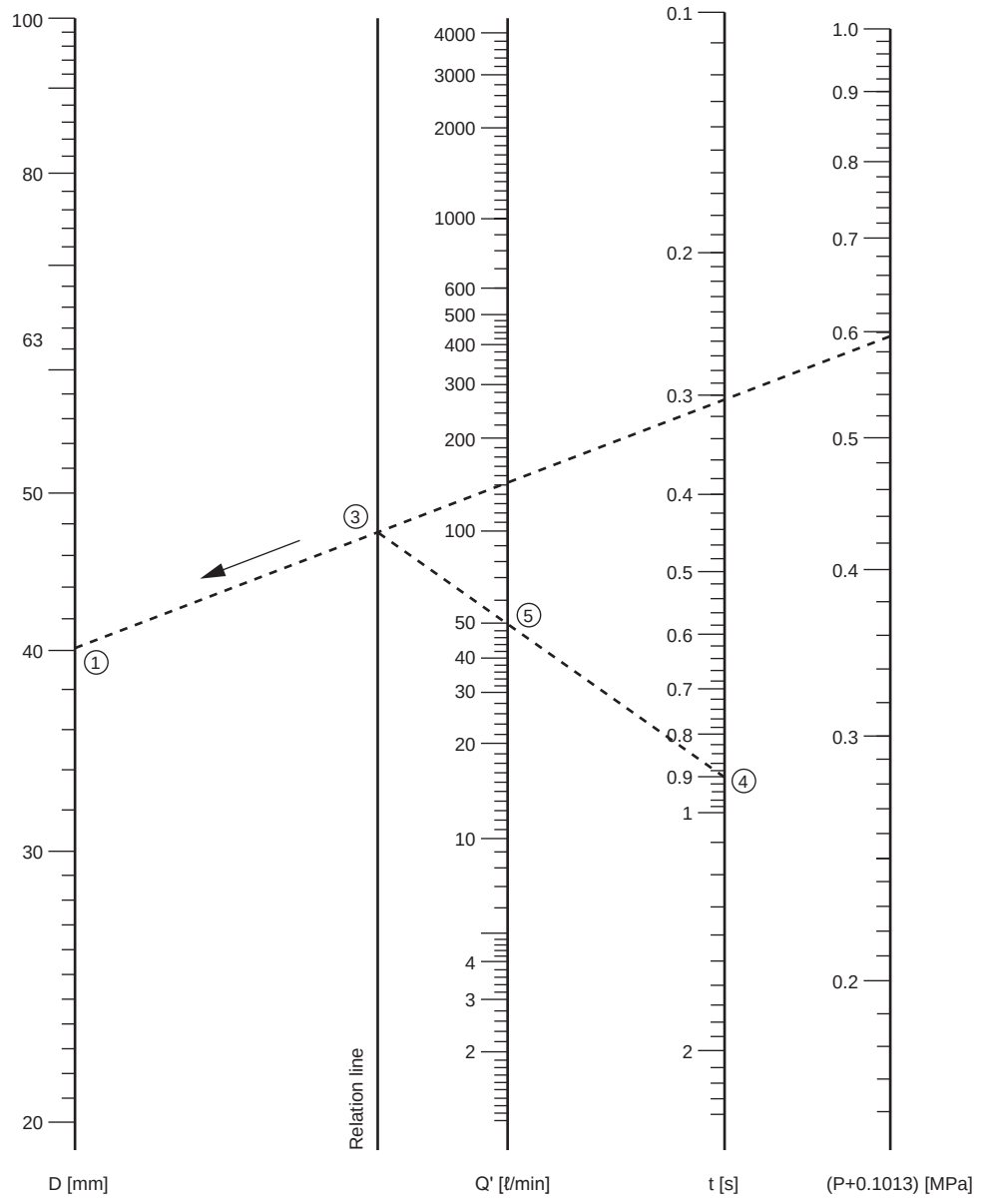

1. Required flow rate formula of cylinder during operation

The required flow rate means the instantaneous flow rate that flows during cylinder operation.
This is different from air consumption of cylinder. Do not confuse them.

$$Q = \frac{\pi}{4} \cdot D^2 \frac{L}{t} \cdot \frac{P+0.1013}{0.1013} \times 10^{-6} \times 60$$

Q: Flow rate [ℓ/min] (ANR)
D: Cylinder bore size [mm]
L: Stroke [mm]
t: Travel time of stroke [s]
P: Working pressure [MPa]

(Example 1 in above fig.) When operating a 40 mm bore cylinder with 0.5 MPa air pressure, and 0.9 s per 100 mm stroke, required flow is:

(Answer) Find the point on the relation line from D and (P + 0.1013), then obtain Q' = 50 (ℓ/min) from the point on the relation line and t.

(Example 2 in figure at next page diag.) When operating a 250 mm bore cylinder with 0.4 MPa air pressure, and 1 s per 100 mm stroke, required flow is:

(Answer) Find the point on the relation line from D and (P + 0.1013), then obtain Q' = 1450 (ℓ/min) from the point on the relation line and t.

Required flow rate of cylinder during operation (bore size 100 to 250 mm)

● Q: Required flow rate ℓ/min. per stroke 100 mm

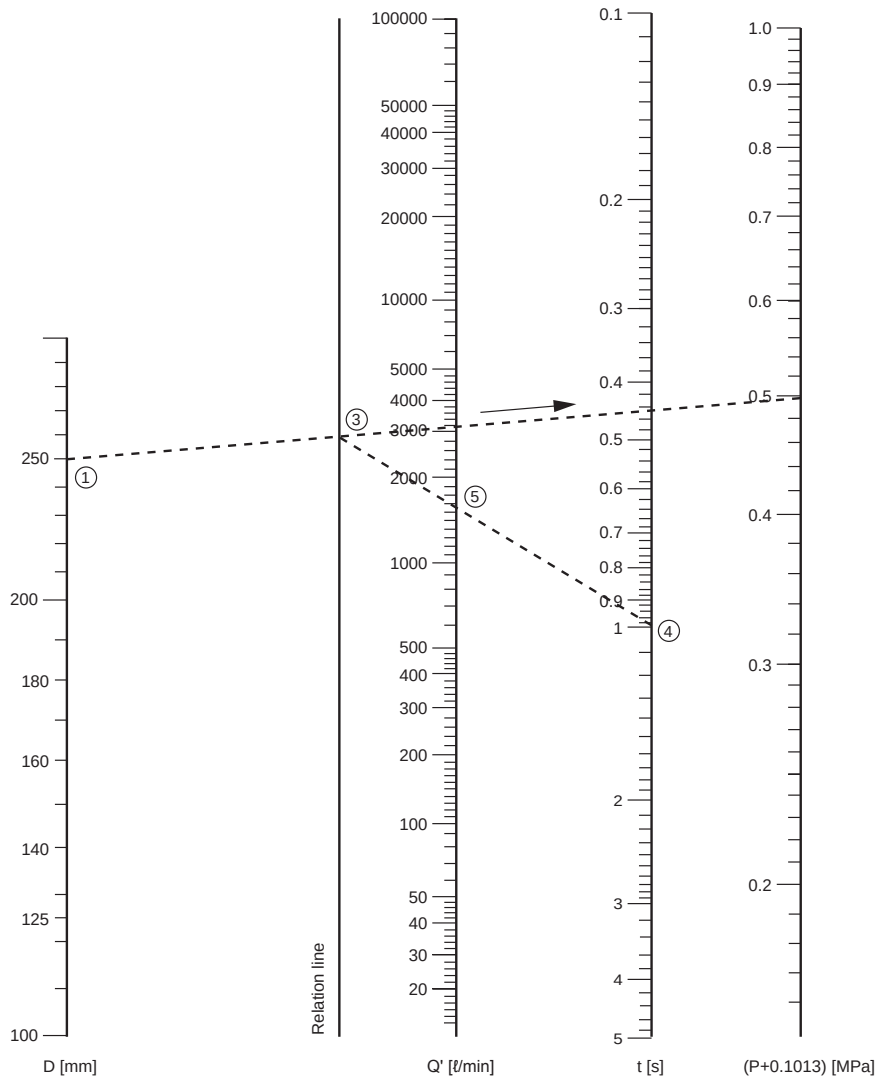

2. Calculating the cylinder's air consumption (per hour)

Air consumption per hour is the amount of air consumed when the cylinder moves within a set time. This is the volume of air consumed by the cylinder and in piping between the cylinder and switching valve. This is not related to cylinder speed and differs from the air flow rate required during operation.

$Q_T = (Q_1 + Q_2 + (2 \times Q_3)) \times n$ [for double acting cylinder]

Q_T : Air consumption per one minute [ℓ/min] (ANR)
n : Operational cycle of cylinder for one minute [time/min]
Q_1 : Air consumption when pushed [ℓ] (ANR)
Q_2 : Air consumption when retracted [ℓ] (ANR)
Q_3 : Piping volume from directional switching valve to each cylinder port [ℓ] (ANR)

$$Q_1 = \frac{\pi}{4} / D^2 \times L \times 10^{-6} \times \left(\frac{P+0.1013}{0.1013}\right)$$

$$Q_2 = \frac{\pi}{4} / (D^2 - d^2) \times L \times 10^{-6} \times \left(\frac{P+0.1013}{0.1013}\right)$$

$$Q_3 = \frac{\pi}{4} / d_3^2 \times L_3 \times 10^{-6} \times \left(\frac{P}{0.1013}\right)$$

D : Cylinder bore size [mm]
d : Piston rod O.D. [mm]
L : Cylinder stroke [mm]
L_3: Pipe length from directional switching valve to cylinder port [mm]
d_3: Pipe bore size from directional switching valve to cylinder port [mm]
P : Working pressure [MPa] (gauge pressure)
(1 ℓ = 1 dm^3.)

(Example) Cylinder bore size 100 mm, rod diameter 30 mm, stroke 800 mm, working pressure 0.5 MPa, number of operations per minute 5 times
Piping bore size 7 mm, piping length 2000 mm

$$Q_1 = \frac{\pi}{4} \times 100^2 \times 800 \times 10^{-6} \times \left(\frac{0.5+0.1013}{0.1013}\right) = 37.3$$

$$Q_2 = \frac{\pi}{4} \times (100^2 - 30^2) \times 800 \times 10^{-6} \times \left(\frac{0.5+0.1013}{0.1013}\right) = 33.9$$

$$Q_3 = \frac{\pi}{4} \times 7^2 \times 2000 \times 10^{-6} \times \left(\frac{0.5}{0.1013}\right) = 0.4$$

Q_T =(37.3+33.9+(2x0.4))x 5 = 360
[ℓ/min] (ANR)

Allowable absorbed energy value: Cushioned

Cushioned allowable absorbed energy value graph

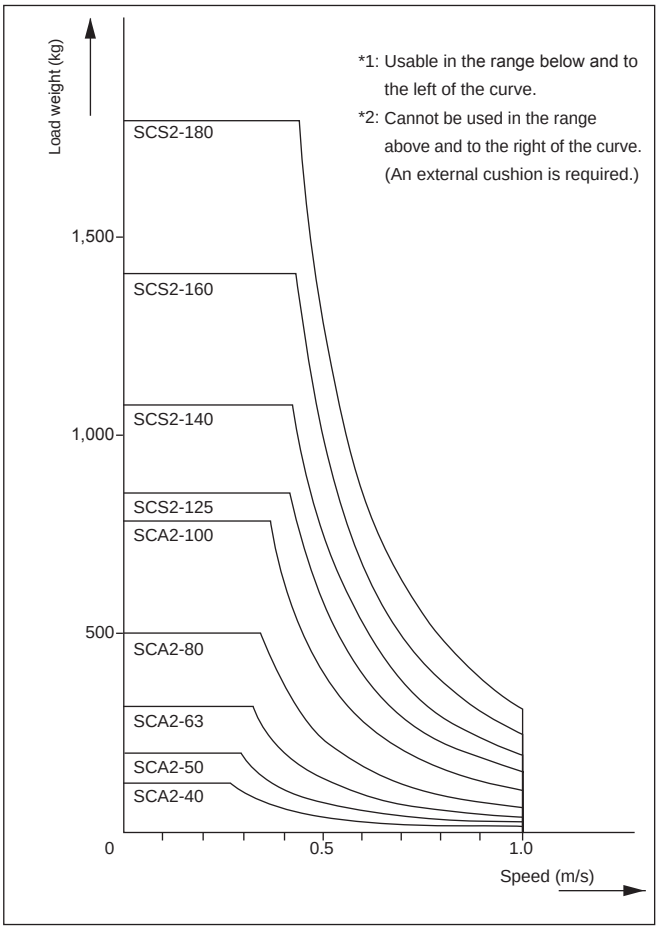

(Note)
Calculating kinetic energy

Average cylinder speed is obtained with $\mu a = \frac{L}{T}$.

υa : Average speed (m/s)
L : Cylinder stroke (m)
T : Operation time (s)

With respect to this, the cylinder speed just before rushing into the cushion can be obtained with the following simple formula.

υm : $= \frac{L}{T} x(1+1.5xw)$

υm : Speed just before rush into cushion (m/s)

w : Indicatored decimal value of cylinder load factor (30% and 50% are 0.3 and 0.5 respectively.)

When calculating kinetic energy or using the graph, use this micron value as speed.

● Cushion

The purpose of the cushion is to absorb the piston's kinetic energy with air compressibility, preventing the piston and cover from colliding at the stroke end. Therefore, the cushion itself does not reduce the piston speed at the stroke end.
The table below shows the kinetic energy which can be absorbed by the cushion. If the kinetic energy exceeds these values, or if bouncing caused by the air compressibility is to be avoided, consider using another shock absorber.

$$\text{Kinetic energy (J)} = \frac{1}{2} x \text{ load weight (kg) x [speed (m/s)]}^2$$

Cushioned absorbed energy

1.SCA2, JSC3

Bore size (mm)	Effective cushion length (mm)	Allowable absorbed energy (J)
ø40	14.6	4.29
ø50	16.6	8.37
ø63	16.6	15.8
ø80	20.6	27.9
ø100	23.6	49.8

2.SCG, SCM, JSG

Bore size (mm)	Effective cushion length (mm)	Allowable absorbed energy (J)	Remarks
ø20	8.1	0.8	SCM only
ø25	8.1	1.2	
ø32	8.6	2.5	
ø40	8.6	3.7	
ø50	13.4	8.0	
ø63	13.4	14.4	
ø80	15.4	25.4	
ø100	15.4	45.6	

3.SCS2, JSC4

Bore size (mm)	Effective cushion length (mm)	Allowable absorbed energy (J)
ø125	21.6	63.5
ø140	21.6	91.5
ø160	21.6	116
ø180	21.6	152
ø200	26.6	233
ø250	26.6	362

Allowable absorbed energy value: Without cushion

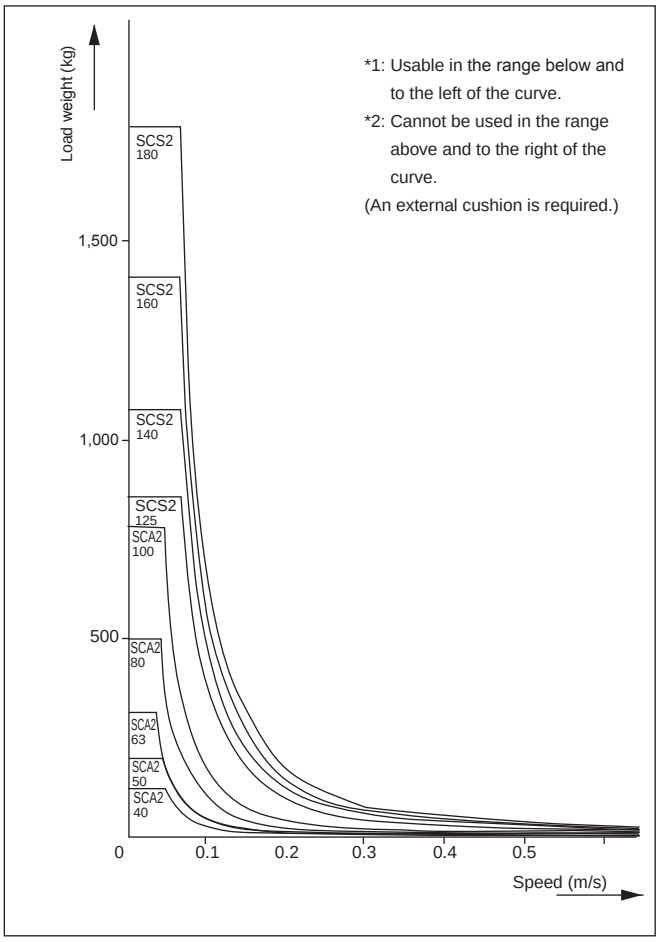

1. Allowable absorbed energy without cushion
   The allowable absorbed energy of each model is shown below.

Allowable absorbed energy without cushion

Unit: J

Code / Bore size (mm)	SCM *1	SCA2	SCS2	CAV2/ COV2
ø40	-	0.067	-	-
ø50	0.057	0.079	-	0.072
ø63	0.057	0.079	-	-
ø75	-	-	-	0.154
ø80	0.112	0.201	-	-
ø100	0.153	0.301	-	0.154
ø125	-	-	0.371	-
ø140	-	-	0.386	-
ø160	-	-	0.386	-
ø180	-	-	0.958	-
ø200	-	-	1.08	-
ø250	-	-	2.32	-

*1: Absorbed energy without cushion applies for cushion codes "R""H".

Allowable absorbed energy value: Without cushion

Max. stroke

D: Cylinder bore size [mm]
F0: Load [N]
L: Max. stroke [mm]

Note
Values in table are calculated values. When exceeding the max. stroke specified for each model, consult with CKD.

Pencil shaped cylinder SCP*3 Series			
D (mm) / F0 (N)	ø6	ø10	ø16
5	570		
10	405	720	
30	230	415	650
50		320	500
100			355

CMA2/CMK2/JSM2 Series			
D (mm) / F0 (N)	ø20	ø25/ø30/ø32	ø40
50	2020		
100	1440	2040	
200	1000	1440	2000
400		1000	1500
600			1160
800			980

SCG/SCA2/JSG/JSC3					
D (mm) / F0 (N)	ø40	ø50	ø63	ø80	ø100
200	2600	4100			
400	1810	2900	2900		
600	1500	2400	2400	3600	
800	1280	2000	2000	3140	4500
1000		1820	1820	2800	4000
1500			1480	2300	3300
2000				1980	2840
2500				1760	2560
3000				1600	2300
3500					2140
4000					2000
5000					1800

SCS2						
D (mm) / F0 (N)	ø125	ø140	ø160	ø180	ø200	ø250
1500	3700	3700				
2000	3200	3200				
2500	2900	2900	4600			
3000	2600	2600	4100	5300		
3500	2400	2400	3800	5000	5900	
4000	2300	2300	3600	4600	5600	
5000	2000	2000	3200	4100	5000	7400
6000	1900	1900	2900	3800	4600	6800
7000	1700	1700	2700	3500	4200	6200
8000		1600	2500	3300	3900	5800
9000		1500	2400	3100	3700	5500
10000			2300	2900	3500	5200
15000				2400	2900	4200
20000					2500	3600
25000						3300
30000						3000

JSC4				
D (mm) / F0 (N)	ø125	ø140	ø160	ø180
1500	4600			
2000	3900	3900		
2500	3500	3500	4600	
3000	3200	3200	4100	5300
3500	3000	3000	3800	5000
4000	2800	2800	3600	4600
5000	2500	2500	3200	4100
6000	2300	2300	2900	3800
7000	2100	2100	2700	3500
8000		2000	2500	3300
9000		1880	2400	3100
10000			2300	2900
15000				2400

Relation between mounting dimensions and max. stroke (L)

1 For both ends pin joint

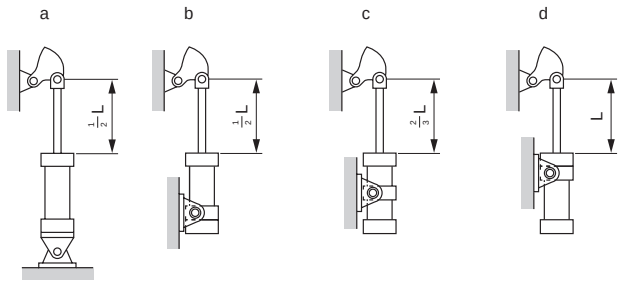

2 For rod end free

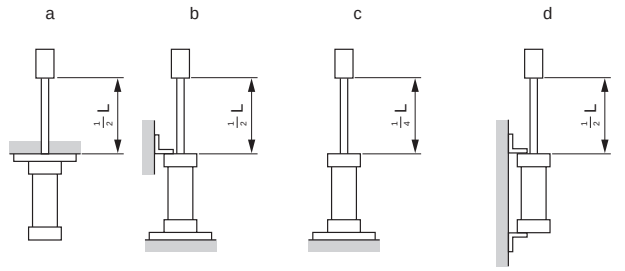

3 For rod end guide (pin joint)

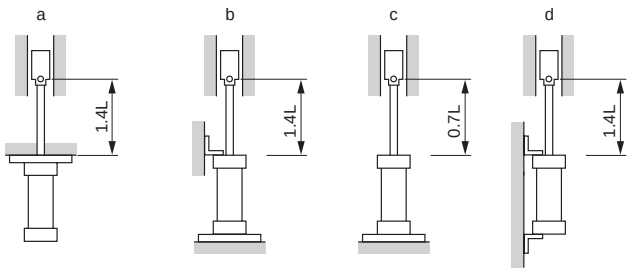

4 For cylinder fixing rod end guide

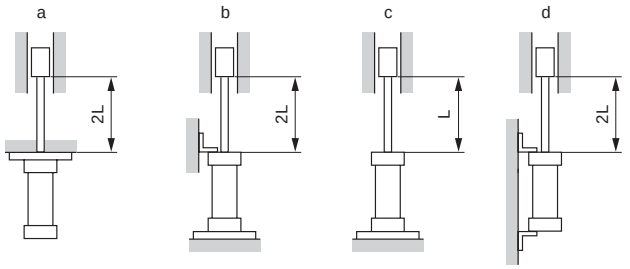

Precautions when max. stroke is exceeded

⚠ CAUTION Note the following if the max. stroke on a model's specifications page is exceeded:

1. Min. working pressure
   The starting pressure is larger since the piston rod sags inside the cylinder.
2. Piston rod buckling
   An internal stopper enabled by contacting the piston with the cylinder cover should be used.When using with an external stopper, refer to “Technical data on the relation between mounting dimensions and max. stroke (L)” (Ending Page 69).
3. Tie rod reinforcement
   Insert a non-sag block to keep the tie rod from sagging and contacting the cylinder tube.

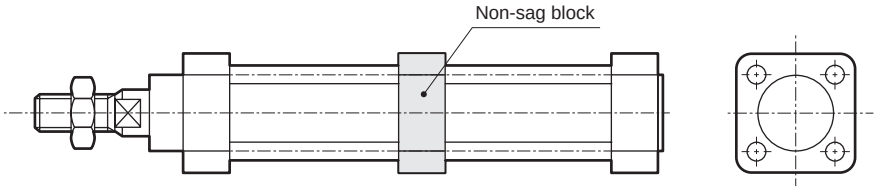

4. Preventing cylinder tube sag
   When mounting horizontally, tubing sag must be prevented.
   Installing a non-sag block for reinforcement of tie rod is recommended to minimize the sag.

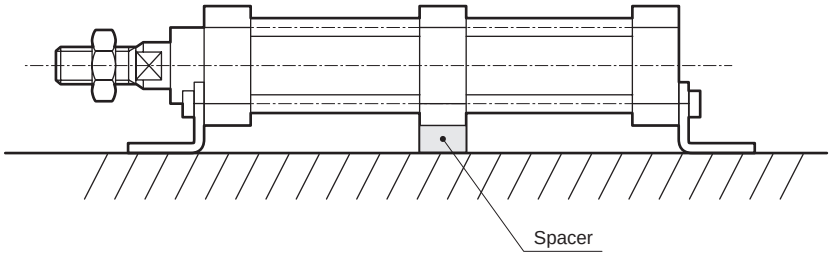

* The following spacers are available made to order.

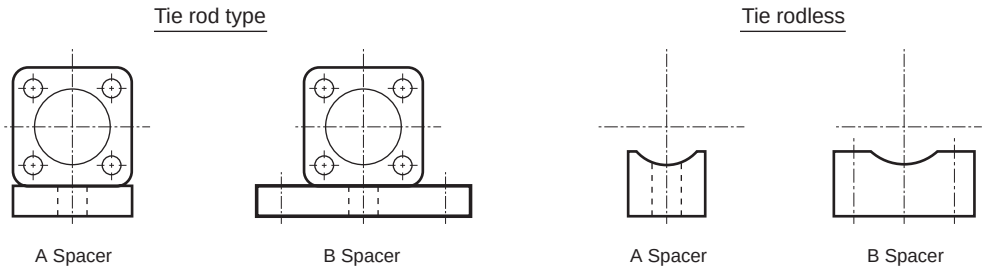

How to determine cylinder mounting

The cylinder piston moves only in one direction. Select cylinder mounting according to the load movement direction shown below.

Load movement direction	Mounting	Caution
The load moves linearly during operation.	Foot Flange	Fix the cylinder body so that load and piston movement directions are parallel.
	Trunnion Clevis type	Use the mounting on the left if the stroke is long, or if the load and piston movement directions are not parallel and in the same direction. Check that lateral load is not applied to the piston rod or bushing.
During operation, the load oscillates within a flat area.	Trunnion Clevis type	Check that the oscillation direction of the clevis or trunnion supporting the cylinder is the same as the load oscillation direction.Also set the oscillation direction of the rod end bracket to the same direction. If a lateral load is applied to the bushing, keep the lateral load to within 1/20 of cylinder output.
During operation, the load oscillates in various directions.	Trunnion Clevis type	Use a knuckle to connect the rod and load. If a lateral load is applied to the bushing, keep the lateral load to within 1/20 of cylinder output.

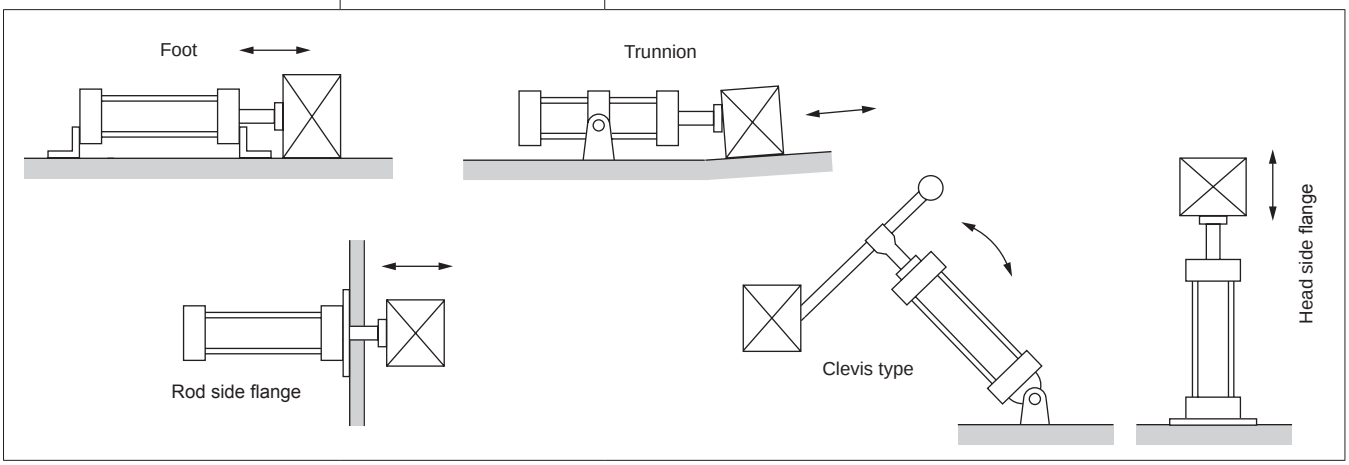

Bellows max. operating ambient temperature

Code	Bellows material	Max. ambient temp.	Instantaneous max. temp.
J	Nylon tarpaulin	60°C	100°C
	Polyolefin elastomer	100°C	200°C
K	Neoprene sheet	100°C	200°C
L	Silicone rubber glass cloth	250°C	400°C

The instantaneous max. temperature is the temperature when sparks and cutting chips, etc., instantaneously contact the bellows.

Air compressor and air tank selection

When selecting a compressor and a tank, consider 10 to 20% leakage loss from actual air consumption due to pipe or switching valves.

Generally, piston displacement listed in compressor manufacturer catalog is the theoretical value. Considering volumetric efficiency, 70% of the theoretical value is the effective value. Therefore, select a compressor whose piston displacement is double the air consumption.

Selecting air compressor for intermittent operation (actuation)

For intermittent operation, if an air tank is installed, even a small air compressor can manage large work projects.

Even if air consumption is high while the cylinder, etc., is operating, causing pressure to drop, install an air tank with a capacity to keep it from dropping to max. working pressure and install a compressor that replaces compressed air before the cylinder operates again.

Capacity of air tank

$$Vt=\frac{Vs}{(Pt-Ps)x10.2}$$

Vt : Tank capacity (ℓ)
Vs : Air consumption per cycle (ℓ) (ANR)
Pt : Tank pressure (MPa)
Ps : Max. working pressure

Certification of second class pressure vessel

According to regulations of the Ministry of Health, Labour and Welfare, the following cylinders should be certified by the Japan Boilers Association.

(1) Cylinders with a rated pressure exceeding 0.2 MPa and cylinder capacity exceeding 0.04 m^3.

(2) Cylinders with a rated pressure exceeding 0.2 MPa, tube bore size exceeding 200 mm and length exceeding 1000 mm.

$$V=\frac{D^2xSx3.14}{4x10^9}$$

V : Cylinder capacity (m^3)
D : Bore size (mm)
S : Body length (cylinder tube length) (mm)

Japan Boiler Association homepage address
http://www.jbanet.or.jp/

[Technical reference data] Commonly used dimension tolerance

Excerpt from JIS B 0401:1998

Shaft tolerance

Basic dimensions (mm)		Shaft intersection range unit: μm									
Over	or less	d9	e8	e11	f7	f8	h6	h7	h8	h9	p6
-	3	-20 -45	-14 -28	-14 -74	-6 -16	-6 -20	0 -6	0 -10	0 -14	0 -25	+12 +6
3	6	-30 -60	-20 -38	-20 -95	-10 -22	-10 -28	0 -8	0 -12	0 -18	0 -30	+20 +12
6	10	-40 -76	-25 -47	-25 -115	-13 -28	-13 -35	0 -9	0 -15	0 -22	0 -36	+24 +15
10	14	-50 -93	-32 -59	-32 -142	-16 -34	-16 -43	0 -11	0 -18	0 -27	0 -43	+29 +18
14	18										
18	24	-65 -117	-40 -73	-40 -170	-20 -41	-20 -53	0 -13	0 -21	0 -33	0 -52	+35 +22
24	30										
30	40	-80 -142	-50 -89	-50 -210	-25 -50	-25 -64	0 -16	0 -25	0 -39	0 -62	+42 +26
40	50										
50	65	-100 -174	-60 -106	-60 -250	-30 -60	-30 -76	0 -19	0 -30	0 -46	0 -74	+51 +32
65	80										
80	100	-120 -207	-72 -126	-72 -292	-36 -71	-36 -90	0 -22	0 -35	0 -54	0 -87	+59 +37

Bore tolerance

Basic dimensions (mm)		Shaft intersection range unit: μm					
Over	or less	F7	H6	H7	H8	H9	H10
-	3	+16 +6	+6 0	+10 0	+14 0	+25 0	+40 0
3	6	+22 +10	+8 0	+12 0	+18 0	+30 0	+48 0
6	10	+28 +13	+9 0	+15 0	+22 0	+36 0	+58 0
10	14	+34 +16	+11 0	+18 0	+27 0	+43 0	+70 0
14	18						
18	24	+41 +20	+13 0	+21 0	+33 0	+52 0	+84 0
24	30						
30	40	+50 +25	+16 0	+25 0	+39 0	+62 0	+100 0
40	50						
50	65	+60 +30	+19 0	+30 0	+46 0	+74 0	+120 0
65	80						
80	100	+71 +36	+22 0	+35 0	+54 0	+87 0	+140 0

International System of Units (SI units)

Conversion of SI units and conventional units

SI units (International System of Units) are used in this catalog.
Conversion for SI and conventional units are shown below.

SI unit conversion table (SI units are indicated with bold line.)

Conversion example (for pressure) 1 kgf/cm^2 ⇒ 9.80665 x 10^{-2} MPa 1 MPa ⇒ 1.01972 x 10 kgf/cm^2

Force

N	dyn	kgf
1	1x10^5	1.01972x10^{-1}
1x10^{-5}	1	1.01972x10^{-6}
9.80665	9.80665x10^5	1

Viscosity

Pa/s	cP	P
1	1x10^3	1x10
1x10^{-3}	1	1x10^{-2}
1x10^{-1}	1x10^2	1

Note: 1 P=1 dyn/s/cm^2 = 1 g/cm/s,
1 Pa/s = 1 N/s/m^2, 1 cP = 1 mPa/s

Stress

Pa or N/m^2	MPa or N/mm^2	kgf/mm^2	kgf/cm^2
1	1x10^{-6}	1.01972x10^{-7}	1.01972x10^{-5}
1x10^6	1	1.01972x10^{-1}	1.01972x10
9.80665x10^6	9.80665	1	1x10^2
9.80665x10^4	9.80665x10^{-2}	1x10^{-2}	1

Note: 1 Pa = 1 N/m^2, 1 MPa = 1 N/mm^2

Kinematic viscosity

m^2/s	cSt	St
1	1x10^6	1x10^4
1x10^{-6}	1	1x10^{-2}
1x10^{-4}	1x10^2	1

Note: 1 St = 1 cm^2/s, 1 cSt = 1 mm^2/s

Pressure

Pa	kPa	MPa	bar	kgf/cm^2	atm	mmH$_2$0 or mmAq	mmHg or Torr
1	1x10^{-3}	1x10^{-6}	1x10^{-5}	1.01972x10^{-5}	9.86923x10^{-6}	1.01972x10^{-1}	7.50062x10^{-3}
1x10^3	1	1x10^{-3}	1x10^{-2}	1.01972x10^{-2}	9.86923x10^{-3}	1.01972x10^2	7.50062
1x10^6	1x10^3	1	1x10	1.01972x10	9.86923	1.01972x10^5	7.50062x10^3
1x10^5	1x10^2	1x10^{-1}	1	1.01972	9.86923x10^{-1}	1.01972x10^4	7.50062x10^2
9.80665x10^4	9.80665x10	9.80665x10^{-2}	9.80665x10^{-1}	1	9.67841x10^{-1}	1x10^4	7.35559x10^2
1.01325x10^5	1.01325x10^2	1.01325x10^{-1}	1.01325	1.03323	1	1.03323x10^4	7.60000x10^2
9.80665	9.80665x10^{-3}	9.80665x10^{-6}	9.80665x10^{-5}	1x10^{-4}	9.67841x10^{-5}	1	7.35559x10^{-2}
1.33322x10^2	1.33322x10^{-1}	1.33322x10^{-4}	1.33322x10^{-3}	1.35951x10^{-3}	1.31579x10^{-3}	1.35951x10	1

Note: 1 Pa = 1 N/m^2

Work/energy/quantity of heat

J	kW/h	kgf/m	kcal
1	2.77778x10^{-7}	1.01972x10^{-1}	2.38889x10^{-4}
3.600x10^6	1	3.67098x10^5	8.6000x10^2
9.80665	2.72407x10^{-6}	1	2.34270x10^{-3}
4.18605x10^3	1.16279x10^{-3}	4.26858x10^2	1

Note: 1 J = 1 W/s, 1 J = 1 N/m 1 cal = 4.18605 J (according to the Measurement Act)

Thermal conduction ratio

W/(m/k)	kcal/(h/m/°C)
1	8.6000x10^{-1}
1.16279	1

Note: 1 cal = 4.18605 J (according to the Measurement Act)

Power (power/motivity) heat flow

W	kgf/m/s	PS	kcal/h
1	1.01972x10^{-1}	1.35962x10^{-3}	8.6000x10^{-1}
9.80665	1	1.33333x10^{-2}	8.43371
7.355x10^2	7.5x10	1	6.32529x10^2
1.16279	1.18572x10^{-1}	1.58095x10^{-3}	1

Note: 1 W = 1 J/s, PS: French horsepower
1 PS = 0.7355 kW (according to the Act for Enforcement of the Measurement Act)
1 cal = 4.18605 J (according to the Measurement Act)

Coefficient of heat transfer

W/(m^2/k)	kcal/(h/m^2/°C)
1	8.6000x10^{-1}
1.16279	1

Note: 1 cal = 4.18605 J (according to the Measurement Act)

Specific heat

J/(kg/k)	kcal/(kg/°C) cal/(g/°C)
1	2.38889x10^{-4}
4.18605x10^3	1

Note: 1 cal = 4.18605 J (according to the Measurement Act)

Rod eye/clevis dimension list

	Page
Rod eye dimension list (by series)	Ending 76
Rod eye dimension list (by thread size)	Ending 78
Rod clevis dimension list (by series)	Ending 80
Rod clevis dimension list (by thread size)	Ending 82

Rod eye/clevis dimension list

Rod eye (by series)

Shape code: A

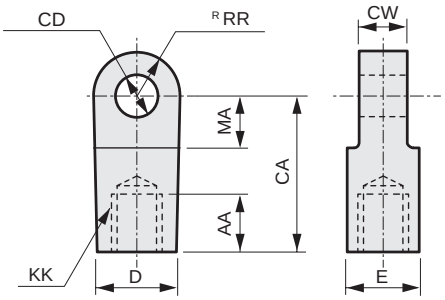

Shape code: B

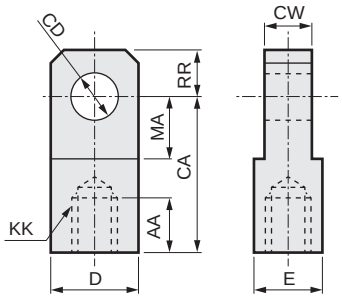

Model	Shape code	Model No.	Applicable bore size (ø)	AA	CA	CD	CW	D	E	KK	MA	RR
CMK2	B	M1-I-20	20	14	30	10 H10	8 -0.1 -0.2	19	19	M8x1.0	13	10
		M1-I-30	25, 32	14	36	12 H10	10 -0.1 -0.2	25	19	M10x1.25	16	12
		M1-I-40	40	14	36	12 H10	10 -0.1 -0.2	25	19	M12x1.5	16	12
CMA2	B	M1-I-20	20	14	30	10 H10	8 -0.1 -0.2	19	19	M8x1.0	13	10
		M1-I-30	30	14	36	12 H10	10 -0.1 -0.2	25	19	M10x1.25	16	12
		M1-I-40	40	14	36	12 H10	10 -0.1 -0.2	25	19	M12x1.5	16	12
CKV2	B	M1-I-20	20	14	30	10 H10	8 -0.1 -0.2	19	19	M8x1.0	13	10
		M1-I-30	25, 32	14	36	12 H10	10 -0.1 -0.2	25	19	M10x1.25	16	12
		M1-I-40	40	14	36	12 H10	10 -0.1 -0.2	25	19	M12x1.5	16	12
CAV2 COV2	A	CAV2-50-I	50	25	50	14 H10	20 0 -0.3	26	26	M16x1.5	20	15
		CAV2-75-I	75, 100	30	65	20 H10	28 0 -0.3	38	35	M22x1.5	28	22.5
HCA	B	M1-I-20	20	14	30	10 H10	8 -0.1 -0.2	19	19	M8x1.0	13	10
		M1-I-30	25, 32	14	36	12 H10	10 -0.1 -0.2	25	19	M10x1.25	16	12
	A	S1-I-40	40	20	50	12 H10	18 -0.1 -0.4	(27)	27	M14x1.5	21	16
		S1-I-50	50	21	50	12 H10	18 -0.1 -0.4	(27)	27	M18x1.5	21	16
		S1-I-63	63	21	50	14 H10	20 -0.1 -0.4	(27)	27	M18x1.5	21	16
		S1-I-80	80	30	70	20 H10	28 -0.1 -0.4	(46)	41	M22x1.5	30	25
		S1-I-100	100	30	70	20 H10	28 -0.1 -0.4	(46)	41	M26x1.5	30	25
JSG	B	SCG-I-40	40	19	40	10 H10	14 -0.1 -0.3	ø22	ø22	M14x1.5	19	10
		SCG-I-50	50, 63	24	50	14 H10	20 -0.1 -0.3	ø28	ø28	M18x1.5	24	14
		SCG-I-80	80	26	60	22 H10	30 -0.1 -0.3	ø40	ø40	M22x1.5	34	20
		SCG-I-100	100	26	60	22 H10	30 -0.1 -0.3	ø40	ø40	M26x1.5	34	20
JSM2	B	M1-I-20	20	14	30	10 H10	8 -0.1 -0.2	19	19	M8x1.0	13	10
		M1-I-30	30	14	36	12 H10	10 -0.1 -0.2	25	19	M10x1.25	16	12
		M1-I-40	40	14	36	12 H10	10 -0.1 -0.2	25	19	M12x1.5	16	12
JSK2	B	M1-I-20	20	14	30	10 H10	8 -0.1 -0.2	19	19	M8x1.0	13	10
		M1-I-30	25, 32	14	36	12 H10	10 -0.1 -0.2	25	19	M10x1.25	16	12
		M1-I-40	40	14	36	12 H10	10 -0.1 -0.2	25	19	M12x1.5	16	12
JSC3	A	S1-I-40	40	20	50	12 H10	18 -0.1 -0.4	(27)	27	M14x1.5	21	16
		S1-I-50	50	21	50	12 H10	18 -0.1 -0.4	(27)	27	M18x1.5	21	16
		S1-I-63	63	21	50	14 H10	20 -0.1 -0.4	(27)	27	M18x1.5	21	16
		S1-I-80	80	30	70	20 H10	28 -0.1 -0.4	(46)	41	M22x1.5	30	25
		S1-I-100	100	30	70	20 H10	28 -0.1 -0.4	(46)	41	M26x1.5	30	25
JSC4	B	SCS2-125-I	125	50	85	25 H10	32 -0.1 -0.4	ø55	ø55	M30x1.5	32	27.5
		SCS2-140-I	140	50	90	28 H10	36 -0.1 -0.4	ø60	ø60	M30x1.5	35	30
		SCS2-160-I	160	60	105	32 H10	40 -0.1 -0.4	ø70	ø70	M36x1.5	40	35
		SCS2-180-I	180	65	115	40 H10	50 -0.1 -0.4	ø85	ø85	M40x1.5	47.5	42.5
SCP*3	B	P2-I-10	10	8	21	3.2 H10	3.1 0 -0.1	12	12	M4	9	7
		P2-I-16	16	8	25	5 H10	6.4 0 -0.1	12	12	M5	14	7

Note: The A and B figures are a guide only. For details, refer to the accessory and external dimensions of each model.

Rod eye (by series)

Model	Shape code	Model No.	Applicable bore size (ø)	AA	CA	CD	CW	D	E	KK	MA	RR
SCA2	A	S1-I-40	40	20	50	12 H10	18 -0.1 -0.4	(27)	27	M14x1.5	21	16
		S1-I-50	50	21	50	12 H10	18 -0.1 -0.4	(27)	27	M18x1.5	21	16
		S1-I-63	63	21	50	14 H10	20 -0.1 -0.4	(27)	27	M18x1.5	21	16
		S1-I-80	80	30	70	20 H10	28 -0.1 -0.4	(46)	41	M22x1.5	30	25
		S1-I-100	100	30	70	20 H10	28 -0.1 -0.4	(46)	41	M26x1.5	30	25
SCG	B	SCG-I-32	32	14	30	10 H10	14 -0.1 -0.3	ø20	ø20	M10x1.25	16	10
		SCG-I-40	40	19	40	10 H10	14 -0.1 -0.3	ø22	ø22	M14x1.5	19	10
		SCG-I-50	50, 63	24	50	14 H10	20 -0.1 -0.3	ø28	ø28	M18x1.5	24	14
		SCG-I-80	80	26	60	22 H10	30 -0.1 -0.3	ø40	ø40	M22x1.5	34	20
		SCG-I-100	100	26	60	22 H10	30 -0.1 -0.3	ø40	ø40	M26x1.5	34	20
SCS2	B	SCS2-125-I	125	50	85	25 H10	32 -0.1 -0.4	ø55	ø55	M30x1.5	32	27.5
		SCS2-140-I	140	50	90	28 H10	36 -0.1 -0.4	ø60	ø60	M30x1.5	35	30
		SCS2-160-I	160	60	105	32 H10	40 -0.1 -0.4	ø70	ø70	M36x1.5	40	35
		SCS2-180-I	180	65	115	40 H10	50 -0.1 -0.4	ø85	ø85	M40x1.5	47.5	42.5
		SCS2-200-I	200	75	125	40 H10	50 -0.1 -0.4	ø85	ø85	M45x1.5	47.5	42.5
		SCS2-250-I	250	88	150	50 H10	63 -0.1 -0.4	ø105	ø105	M56x2	57.5	52.5
SCM	B	SCM-I-20	20	8.5	25	8 H10	8 -0.2 -0.4	16	16	M8	11.5	9
		SCM-I-25	25, 32	10.5	30	10 H10	10 -0.2 -0.4	20	20	M10x1.25	14	11
	A	SCM-I-40	40	14	30	10 H10	18 -0.3 -0.5	22	22	M14x1.5	14	12
		SCM-I-50	50, 63	18	40	14 H10	22 -0.3 -0.5	28	28	M18x1.5	20	16
		SCM-I-80	80	21	50	18 H10	28 -0.3 -0.5	38	38	M22x1.5	27	21
		SCM-I-100	100	21	55	22 H10	32 -0.3 -0.5	44	44	M26x1.5	31	24
SSD2	B	SSD2-I-12	12	6	16	5 H10	5 -0.2 -0.4	10	10	M5x0.8	7	5.5
		SSD2-I-16	16	8	25	5 H10	6.5 -0.2 -0.4	12	12	M6x1	14	7
		SSD2-I-20	20	8.5	25	8 H10	8 -0.2 -0.4	16	16	M8x1.25	11.5	9
		SSD2-I-25	25	10.5	30	10 H10	10 -0.2 -0.4	20	20	M10x1.25	14	11
	A	SSD2-I-32	32, 40	14	30	10 H10	18 -0.3 -0.5	ø22	ø22	M14x1.5	14	12
		SSD2-I-50	50, 63	18	40	14 H10	22 -0.3 -0.5	ø28	ø28	M18x1.5	20	16
		SSD2-I-80	80	21	50	18 H10	28 -0.3 -0.5	ø38	ø38	M22x1.5	27	21
		SSD2-I-100	100	21	55	22 H10	32 -0.3 -0.5	ø44	ø44	M26x1.5	31	24
SSD	B	P2-I-16	12	8	25	5 H10	6.4 -0 -0.1	12	12	M5	14	10
	A	SSD-I-16	16	8	25	5 H10	6.5 -0.1 -0.2	12	12	M6	14	10
	B	SSD-I-20	20	13.5	30	10 H10	8 -0.1 -0.2	19	19	M8	13	10
		M1-I-30	25	14	36	12 H10	10 -0.1 -0.2	25	19	M10x1.25	16	12
		SSD-I-32	32	15	36	12 H10	10 -0.1 -0.2	25	19	M14	16	12
	A	SSD-I-40	40	20	50	12 H10	18 -0.1 -0.4	27	27	M14x1.5	21	16
		SSD-I-50	50	21	50	12 H10	18 -0.1 -0.4	27	27	M18x1.5	21	16
		SSD-I-63	63	21	50	14 H10	20 -0.1 -0.4	(27)	27	M18x1.5	21	16
		SSD-I-80	80	30	70	20 H10	28 -0.1 -0.4	46	41	M22x1.5	30	25
		SSD-I-100	100	30	70	20 H10	28 -0.1 -0.4	46	41	M26x1.5	30	25
	B	SCS-125-I	125, 140	50	85	25 H10	32 -0.1 -0.4	55	55	M30x1.5	32	27.5
		SCS-160-I	160	60	105	32 H10	40 -0.1 -0.4	70	70	M36x1.5	40	35
ULK	B	M1-I-20	20	14	30	10 H10	8 -0.1 -0.2	19	19	M8x1.0	13	10
		M1-I-30	25, 32	14	36	12 H10	10 -0.1 -0.2	25	19	M10x1.25	16	12
		M1-I-40	40	14	36	12 H10	10 -0.1 -0.2	25	19	M12x1.5	16	12

Rod eye/clevis dimension list

Rod eye (by thread size)

Shape code: A

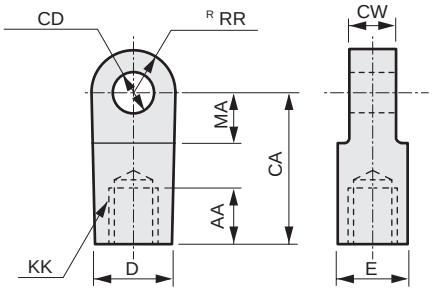

Shape code: B

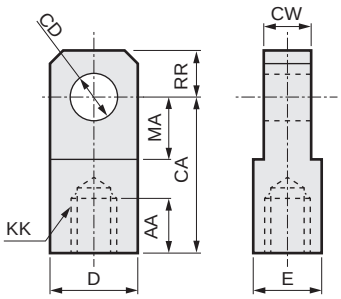

Thread size KK	Model No.	Shape code	Compatible model	Applicable bore size (ø)	AA	CA	CD	CW	D	E	MA	RR
M4	P2-I-10	B	SCP*3	10	8	21	3.2 ^{H10}	3.1 $^{0}_{-0.1}$	12	12	9	7
M5	P2-I-16	B	SCP*3	16	8	25	5 ^{H10}	6.4 $^{0}_{-0.1}$	12	12	14	7
			SSD	12								
	SSD2-I-12	B	SSD2	12	6	16	5 ^{H10}	5 $^{-0.2}_{-0.4}$	10	10	7	5.5
M6	SSD-I-16	A	SSD	16	8	25	5 ^{H10}	6.5 $^{-0.1}_{-0.2}$	12	12	14	10
	SSD2-I-16	B	SSD2	16	8	25	5 ^{H10}	6.5 $^{-0.2}_{-0.4}$	12	12	14	7
M8x1.0	M1-I-20	B	CKV2, CMA2, CMK2 HCA, JSK2, JSM2 ULK	20	14	30	10 ^{H10}	8 $^{-0.1}_{-0.2}$	19	19	13	10
M8	SCM-I-20	B	SCM	20	8.5	25	8 ^{H10}	8 $^{-0.2}_{-0.4}$	16	16	11.5	9
	SSD-I-20	B	SSD	20	13.5	30	10 ^{H10}	8 $^{-0.1}_{-0.2}$	19	19	13	10
	SSD2-I-20	B	SSD2	20	8.5	25	8 ^{H10}	8 $^{-0.2}_{-0.4}$	16	16	11.5	9
M10x1.25	SCG-I-32	B	SCG	32	14	30	10 ^{H10}	14 $^{-0.1}_{-0.3}$	ø20	ø20	16	10
	M1-I-30	B	CMA2, CMK2, HCA JSK2, JSM2, ULK, SSD	25, 30, 32	14	36	12 ^{H10}	10 $^{-0.1}_{-0.2}$	25	19	16	12
	SCM-I-25	B	SCM	25, 32	10.5	30	10 ^{H10}	10 $^{-0.2}_{-0.4}$	20	20	14	11
	SSD2-I-25	B	SSD2	25	10.5	30	10 ^{H10}	10 $^{-0.2}_{-0.4}$	20	20	14	11
M12x1.5	M1-I-40	B	CKV2, CMA2, CMK2 JSK2, JSM2, ULK	40	14	36	12 ^{H10}	10 $^{-0.1}_{-0.2}$	25	19	16	12
M14x1.5	SCG-I-40	B	SCG, JSG	40	19	40	10 ^{H10}	14 $^{-0.1}_{-0.3}$	ø22	ø22	19	10
	SSD2-I-32	A	SSD2	32, 40	14	30	10 ^{H10}	18 $^{-0.3}_{-0.5}$	ø22	ø22	14	12
	S1-I-40	A	HCA, JSC3 SCA2, SSD	40	20	50	12 ^{H10}	18 $^{-0.1}_{-0.4}$	(27)	27	21	16
	SCM-I-40	A	SCM	40	14	30	10 ^{H10}	18 $^{-0.3}_{-0.5}$	22	22	14	12
M14	SSD-I-32	B	SSD	32	15	36	12	10 $^{-0.1}_{-0.2}$	25	19	16	12
M16x1.5	CAV2-50-I	A	CAV2, COV2	50	25	50	14 ^{H10}	20 $^{0}_{-0.3}$	26	26	20	15
M18x1.5	SCG-I-50	B	SCG, JSG	50, 63	24	50	14 ^{H10}	20 $^{-0.1}_{-0.3}$	ø28	ø28	24	14
	SSD2-I-50	A	SSD2	50, 63	18	40	14 ^{H10}	22 $^{-0.3}_{-0.5}$	ø28	ø28	20	16
	S1-I-50	A	HCA, JSC3, SCA2	50	21	50	12 ^{H10}	18 $^{-0.1}_{-0.4}$	(27)	27	21	16
	SSD-I-50		SSD									
	S1-I-63	A	HCA, JSC3, SCA2	63	21	50	14 ^{H10}	20 $^{-0.1}_{-0.4}$	(27)	27	21	16
	SSD-I-63		SSD									
	SCM-I-50	A	SCM	50, 63	18	40	14 ^{H10}	22 $^{-0.3}_{-0.5}$	28	28	20	16
M22x1.5	SCG-I-80	B	SCG, JSG	80	26	60	22 ^{H10}	30 $^{-0.1}_{-0.3}$	ø40	ø40	34	20
	CAV2-75-I	A	CAV2, COV2	75, 100	30	65	20 ^{H10}	28 $^{0}_{-0.3}$	38	35	28	22.5
	S1-I-80	A	HCA, JSC3, SCA2	80	30	70	20 ^{H10}	28 $^{-0.1}_{-0.4}$	(46)	41	30	25
	SSD-I-80		SSD									
	SCM-I-80	A	SCM	80	21	50	18 ^{H10}	28 $^{-0.3}_{-0.5}$	38	38	27	21
	SSD2-I-80	A	SSD2	80	21	50	18 ^{H10}	28 $^{-0.3}_{-0.5}$	ø38	ø38	27	21
M26x1.5	SCG-I-100	B	SCG, JSG	100	26	60	22 ^{H10}	30 $^{-0.1}_{-0.3}$	ø40	ø40	34	20
	S1-I-100	A	HCA, JSC3, SCA2	100	30	70	20 ^{H10}	28 $^{-0.1}_{-0.4}$	(46)	41	30	25
	SSD-I-100		SSD									
	SCM-I-100	A	SCM	100	21	55	22 ^{H10}	32 $^{-0.3}_{-0.5}$	44	44	31	24

Note: The A and B figures are a guide only. For details, refer to the accessory and external dimensions of each model.

Rod eye (by thread size)

Thread size KK	Model No.	Shape code	Compatible model	Applicable bore size (ø)	AA	CA	CD	CW	D	E	MA	RR
M26x1.5	SSD2-I-100	A	SSD2	100	21	55	22 ^{H10}	32 $^{-0.3}_{-0.5}$	ø44	ø44	31	24
M30x1.5	SCS2-125-I	B	JSC4, SCS2	125	50	85	25 ^{H10}	32 $^{-0.1}_{-0.4}$	ø55	ø55	32	27.5
			SSD	125, 140								
	SCS2-140-I	B	JSC4, SCS2	140	50	90	28 ^{H10}	36 $^{-0.1}_{-0.4}$	ø60	ø60	35	30
M36x1.5	SCS2-160-I	B	JSC4, SCS2, SSD	160	60	105	32 ^{H10}	40 $^{-0.1}_{-0.4}$	ø70	ø70	40	35
M40x1.5	SCS2-180-I	B	JSC4, SCS2	180	65	115	40 ^{H10}	50 $^{-0.1}_{-0.4}$	ø85	ø85	47.5	42.5
M45x1.5	SCS2-200-I	B	SCS2	200	75	125	40 ^{H10}	50 $^{-0.1}_{-0.4}$	ø85	ø85	47.5	42.5
M56x2	SCS2-250-I	B	SCS2	250	88	150	50 ^{H10}	63 $^{-0.1}_{-0.4}$	ø105	ø105	57.5	52.5

Note: The A and B figures are a guide only. For details, refer to the accessory and external dimensions of each model.

Rod eye/clevis dimension list

Rod clevis (by series)

Shape code: A

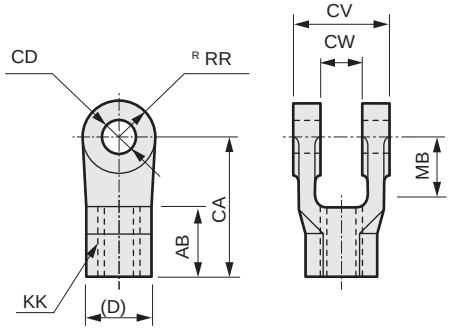

Shape code: B

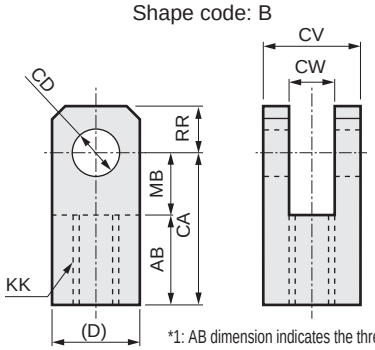

*1: AB dimension indicates the thread depth.
*2: The MB dimension is the effective length of the CW dimension.

Model	Shape code	Model No.	Applicable bore size (ø)	AB	CA	CW	CD	CV	D	KK	MB	RR
CMK2	B	M1-Y-20	20	17	30	8 $^{+0.3}_{+0.1}$	10 ^{H10}	19	19	M8x1.0	13	10
		M1-Y-30	25, 32	20	36	10 $^{+0.3}_{+0.1}$	12 ^{H10}	25	25	M10x1.25	16	12
		M1-Y-40	40	20	36	10 $^{+0.3}_{+0.1}$	12 ^{H10}	25	25	M12x1.5	16	12
CMA2	B	M1-Y-20	20	17	30	8 $^{+0.3}_{+0.1}$	10 ^{H10}	19	19	M8x1.0	13	10
		M1-Y-30	30	20	36	10 $^{+0.3}_{+0.1}$	12 ^{H10}	25	25	M10x1.25	16	12
		M1-Y-40	40	20	36	10 $^{+0.3}_{+0.1}$	12 ^{H10}	25	25	M12x1.5	16	12
CKV2	B	M1-Y-20	20	17	30	8 $^{+0.3}_{+0.1}$	10 ^{H10}	19	19	M8x1.0	13	10
		M1-Y-30	25, 32	20	36	10 $^{+0.3}_{+0.1}$	12 ^{H10}	25	25	M10x1.25	16	12
		M1-Y-40	40	20	36	10 $^{+0.3}_{+0.1}$	12 ^{H10}	25	25	M12x1.5	16	12
CAV2 COV2	A	CAV2-50-Y	50	25	50	20 $^{+0.3}_{0}$	14 ^{H10}	42	(23)	M16x1.5	18	15
		CAV2-75-Y	75, 100	30	65	28 $^{+0.3}_{0}$	20 ^{H10}	60	(35)	M22x1.5	28	22.5
HCA	B	M1-Y-20	20	17	30	8 $^{+0.3}_{+0.1}$	10 ^{H10}	19	19	M8x1.0	13	10
		M1-Y-30	25, 32	20	36	10 $^{+0.3}_{+0.1}$	12 ^{H10}	25	25	M10x1.25	16	12
	A	S1-Y-40	40	24	50	18 $^{+0.4}_{+0.1}$	12 ^{H10}	36	(27)	M14x1.5	19	16
		S1-Y-50	50	24	50	18 $^{+0.4}_{+0.1}$	12 ^{H10}	36	(27)	M18x1.5	19	16
		S1-Y-63	63	24	50	20 $^{+0.4}_{+0.1}$	14 ^{H10}	40	(27)	M18x1.5	19	16
		S1-Y-80	80	35	70	28 $^{+0.4}_{+0.1}$	20 ^{H10}	56	(41)	M22x1.5	30	25
		S1-Y-100	100	35	70	28 $^{+0.4}_{+0.1}$	20 ^{H10}	56	(41)	M26x1.5	30	25
JSG	A	SCG-Y-40	40	21	40	14 $^{+0.3}_{+0.1}$	10 ^{H10}	28	(22)	M14x1.5	19	11
		SCG-Y-50	50, 63	26	50	20 $^{+0.3}_{+0.1}$	14 ^{H10}	40	(28)	M18x1.5	24	14
		SCG-Y-80	80	31	65	30 $^{+0.3}_{+0.1}$	22 ^{H10}	60	(40)	M22x1.5	34	20
		SCG-Y-100	100	31	65	30 $^{+0.3}_{+0.1}$	22 ^{H10}	60	(40)	M26x1.5	34	20
JSM2	B	M1-Y-20	20	17	30	8 $^{+0.3}_{+0.1}$	10 ^{H10}	19	19	M8x1.0	13	10
		M1-Y-30	30	20	36	10 $^{+0.3}_{+0.1}$	12 ^{H10}	25	25	M10x1.25	16	12
		M1-Y-40	40	20	36	10 $^{+0.3}_{+0.1}$	12 ^{H10}	25	25	M12x1.5	16	12
JSK2	B	M1-Y-20	20	17	30	8 $^{+0.3}_{+0.1}$	10 ^{H10}	19	19	M8x1.0	13	10
		M1-Y-30	25, 32	20	36	10 $^{+0.3}_{+0.1}$	12 ^{H10}	25	25	M10x1.25	16	12
		M1-Y-40	40	20	36	10 $^{+0.3}_{+0.1}$	12 ^{H10}	25	25	M12x1.5	16	12
JSC3	A	S1-Y-40	40	24	50	18 $^{+0.4}_{+0.1}$	12 ^{H10}	36	(27)	M14x1.5	19	16
		S1-Y-50	50	24	50	18 $^{+0.4}_{+0.1}$	12 ^{H10}	36	(27)	M18x1.5	19	16
		S1-Y-63	63	24	50	20 $^{+0.4}_{+0.1}$	14 ^{H10}	40	(27)	M18x1.5	19	16
		S1-Y-80	80	35	70	28 $^{+0.4}_{+0.1}$	20 ^{H10}	56	(41)	M22x1.5	30	25
		S1-Y-100	100	35	70	28 $^{+0.4}_{+0.1}$	20 ^{H10}	56	(41)	M26x1.5	30	25
JSC4	A	SCS2-125-Y	125	50	85	32 $^{+0.4}_{+0.1}$	25 ^{H10}	64	(46)	M30x1.5	35	27.5
		SCS2-140-Y	140	50	90	36 $^{+0.4}_{+0.1}$	28 ^{H10}	72	(46)	M30x1.5	40	30
		SCS2-160-Y	160	60	105	40 $^{+0.4}_{+0.1}$	32 ^{H10}	80	(55)	M36x1.5	45	35
		SCS2-180-Y	180	65	115	50 $^{+0.4}_{+0.1}$	40 ^{H10}	100	(60)	M40x1.5	50	42.5
SCP*3	B	P2-Y-10	10	8	21	3.2 $^{+0.2}_{+0.1}$	3.2 ^{H10}	12	12	M4	10	7
		P2-Y-16	16	11	21	6.5 $^{+0.2}_{+0.1}$	5 ^{H10}	12	12	M5	10	7

Note: The A and B figures are a guide only. For details, refer to the accessory and external dimensions of each model.

Rod clevis (by series)

Model	Shape code	Model No.	Applicable bore size (ø)	AB	CA	CW	CD	CV	D	KK	MB	RR
SCG	A	SCG-Y-32	32	14	30	14 $^{+0.3}_{+0.1}$	10 ^{H10}	28	(20)	M10x1.25	16	10
		SCG-Y-40	40	21	40	14 $^{+0.3}_{+0.1}$	10 ^{H10}	28	(22)	M14x1.5	19	11
		SCG-Y-50	50, 63	26	50	20 $^{+0.3}_{+0.1}$	14 ^{H10}	40	(28)	M18x1.5	24	14
		SCG-Y-80	80	31	65	30 $^{+0.3}_{+0.1}$	22 ^{H10}	60	(40)	M22x1.5	34	20
		SCG-Y-100	100	31	65	30 $^{+0.3}_{+0.1}$	22 ^{H10}	60	(40)	M26x1.5	34	20
SCA2	A	S1-Y-40	40	24	50	18 $^{+0.4}_{+0.1}$	12 ^{H10}	36	(27)	M14x1.5	19	16
		S1-Y-50	50	24	50	18 $^{+0.4}_{+0.1}$	12 ^{H10}	36	(27)	M18x1.5	19	16
		S1-Y-63	63	24	50	20 $^{+0.4}_{+0.1}$	14 ^{H10}	40	(27)	M18x1.5	19	16
		S1-Y-80	80	35	70	28 $^{+0.4}_{+0.1}$	20 ^{H10}	56	(41)	M22x1.5	30	25
		S1-Y-100	100	35	70	28 $^{+0.4}_{+0.1}$	20 ^{H10}	56	(41)	M26x1.5	30	25
SCS2	A	SCS2-125-Y	125	50	85	32 $^{+0.4}_{+0.1}$	25 ^{H10}	64	(46)	M30x1.5	35	27.5
		SCS2-140-Y	140	50	90	36 $^{+0.4}_{+0.1}$	28 ^{H10}	72	(46)	M30x1.5	40	30
		SCS2-160-Y	160	60	105	40 $^{+0.4}_{+0.1}$	32 ^{H10}	80	(55)	M36x1.5	45	35
		SCS2-180-Y	180	65	115	50 $^{+0.4}_{+0.1}$	40 ^{H10}	100	(60)	M40x1.5	50	42.5
		SCS2-200-Y	200	75	125	50 $^{+0.4}_{+0.1}$	40 ^{H10}	100	(70)	M45x1.5	50	42.5
		SCS2-250-Y	250	88	150	63 $^{+0.4}_{+0.1}$	50 ^{H10}	126	(85)	M56x2	62	52.5
SCM	B	SCM-Y-20	20	13.5	25	8 $^{+0.4}_{+0.2}$	8 ^{H10}	16	16	M8	11.5	9
		SCM-Y-25	25, 32	16	30	10 $^{+0.4}_{+0.2}$	10 ^{H10}	20	20	M10x1.25	14	11
	A	SCM-Y-40	40	16	30	18 $^{+0.5}_{+0.3}$	10 ^{H10}	36	22	M14x1.5	14	12
		SCM-Y-50	50, 63	20	40	22 $^{+0.5}_{+0.3}$	14 ^{H10}	44	28	M18x1.5	20	16
		SCM-Y-80	80	23	50	28 $^{+0.5}_{+0.3}$	18 ^{H10}	56	38	M22x1.5	27	21
		SCM-Y-100	100	24	55	32 $^{+0.5}_{+0.3}$	22 ^{H10}	64	44	M26x1.5	31	24
SSD	B	P2-Y-16	12	11	21	6.5 $^{+0.2}_{+0.1}$	5 ^{H10}	12	12	M5	10	7
	A	SSD-Y-16	16	11	21	6.5 $^{+0.2}_{+0.1}$	5 ^{H10}	12	12	M6	10	10
	B	SSD-Y-20	20	17	30	8 $^{+0.3}_{+0.1}$	10 ^{H10}	19	19	M8	13	10
		M1-Y-30	25	20	36	10 $^{+0.3}_{+0.1}$	12 ^{H10}	25	25	M10x1.25	16	12
		SSD-Y-32	32	15	36	10 $^{+0.3}_{+0.1}$	12 ^{H10}	25	25	M14	16	12
	A	SSD-Y-40	40	24	50	18 $^{+0.4}_{+0.1}$	12 ^{H10}	36	(27)	M14x1.5	19	16
		SSD-Y-50	50	24	50	18 $^{+0.4}_{+0.1}$	12 ^{H10}	36	(27)	M18x1.5	19	16
		SSD-Y-63	63	24	50	20 $^{+0.4}_{+0.1}$	14 ^{H10}	40	(27)	M18x1.5	19	16
		SSD-Y-80	80	35	70	28 $^{+0.4}_{+0.1}$	20 ^{H10}	56	(41)	M22x1.5	30	25
		SSD-Y-100	100	35	70	28 $^{+0.4}_{+0.1}$	20 ^{H10}	56	(41)	M26x1.5	30	25
	B	SCS2-125-Y	125, 140	50	85	32 $^{+0.4}_{+0.1}$	25 ^{H10}	64	(46)	M30x1.5	35	27.5
		SCS2-160-Y	160	60	105	40 $^{+0.4}_{+0.1}$	32 ^{H10}	80	(55)	M36x1.5	45	35
SSD2	B	SSD2-Y-12	12	6	16	5 $^{+0.4}_{+0.2}$	5 ^{H10}	10	10	M5x0.8	7	5.5
		SSD2-Y-16	16	11	21	6.5 $^{+0.4}_{+0.2}$	5 ^{H10}	12	12	M6x1	10	7
		SSD2-Y-20	20	13.5	25	8 $^{+0.4}_{+0.2}$	8 ^{H10}	16	16	M8x1.25	11.5	9
		SSD2-Y-25	25	16	30	10 $^{+0.4}_{+0.2}$	10 ^{H10}	20	20	M10x1.25	14	11
	A	SSD2-Y-32	32, 40	16	30	18 $^{+0.5}_{+0.3}$	10 ^{H10}	36	ø22	M14x1.5	14	12
		SSD2-Y-50	50, 63	20	40	22 $^{+0.5}_{+0.3}$	14 ^{H10}	44	ø28	M18x1.5	20	16
		SSD2-Y-80	80	23	50	28 $^{+0.5}_{+0.3}$	18 ^{H10}	56	ø38	M22x1.5	27	21
		SSD2-Y-100	100	24	55	32 $^{+0.5}_{+0.3}$	22 ^{H10}	64	ø44	M26x1.5	31	24
ULK	B	M1-Y-20	20	17	30	8 $^{+0.3}_{+0.1}$	10 ^{H10}	19	19	M8x1.0	13	10
		M1-Y-30	25, 32	20	36	10 $^{+0.3}_{+0.1}$	12 ^{H10}	25	25	M10x1.25	16	12
		M1-Y-40	40	20	36	10 $^{+0.3}_{+0.1}$	12 ^{H10}	25	25	M12x1.5	16	12

Rod eye/clevis dimension list

Rod clevis (by thread size)

Shape code: A

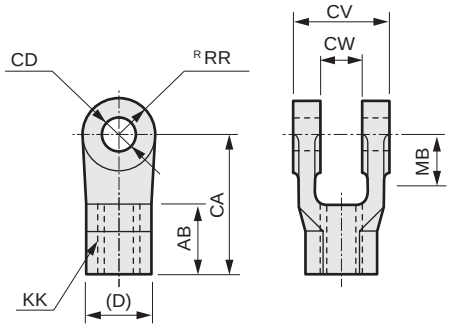

Shape code: B

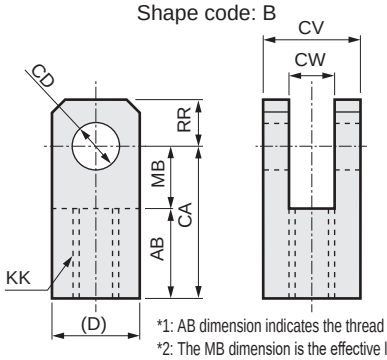

*1: AB dimension indicates the thread depth.
*2: The MB dimension is the effective length of the CW dimension.

Thread size KK	Model No.	Shape code	Compatible model	Applicable bore size (ø)	AB	CA	CW	CD	CV	D	MB	RR
M4	P2-Y-10	B	SCP*3	10	8	21	$3.2^{+0.2}_{0}$	3.2^{H10}	12	12	10	7
M5	P2-Y-16	B	SCP*3	16	11	21	$6.5^{+0.2}_{0}$	5^{H10}	12	12	10	7
			SSD	12								
	SSD2-Y-12	B	SSD2	12	6	16	$5^{+0.4}_{+0.2}$	5^{H10}	10	10	7	5.5
M6	SSD-Y-16	A	SSD	16	11	21	$6.5^{+0.2}_{+0.1}$	5	12	12	10	10
	SSD2-Y-16	B	SSD2	16	11	21	$6.5^{+0.4}_{+0.2}$	5^{H10}	12	12	10	7
M8x1.0	M1-Y-20	B	CKV2, CMA2, CMK2 HCA, JSK2, JSM2 ULK	20	17	30	$8^{+0.3}_{+0.1}$	10^{H10}	19	19	13	10
M8	SCM-Y-20	B	SCM	20	13.5	25	$8^{+0.4}_{+0.2}$	8^{H10}	16	16	11.5	9
	SSD-Y-20	B	SSD	20	17	30	$8^{+0.3}_{+0.1}$	10	19	19	13	10
M8x1.25	SSD2-Y-20	B	SSD2	20	13.5	25	$8^{+0.4}_{+0.2}$	8^{H10}	16	16	11.5	9
M10x1.25	SCG-Y-32	A	SCG	32	14	30	$14^{+0.3}_{+0.1}$	10^{H10}	28	(20)	16	10
	M1-Y-30	B	CKV2, CMA2, CMK2 HCA, JSK2, JSM2 ULK, SSD	25, 30, 32	20	36	$10^{+0.3}_{+0.1}$	12^{H10}	25	25	16	12
	SCM-Y-25	B	SCM	25, 32	16	30	$10^{+0.4}_{+0.2}$	10^{H10}	20	20	14	11
	SSD2-Y-25	B	SSD2	25	16	30	$10^{+0.4}_{+0.2}$	10^{H10}	20	20	14	11
M12x1.5	M1-Y-40	B	CKV2, CMA2, CMK2 JSK2, JSM2, ULK	40	20	36	$10^{+0.3}_{+0.1}$	12^{H10}	25	25	16	12
M14x1.5	SCG-Y-40	A	SCG, JSG	40	21	40	$14^{+0.3}_{+0.1}$	10^{H10}	28	(22)	19	11
	S1-Y-40	A	HCA, JSC3 SCA2, SSD	40	24	50	$18^{+0.4}_{+0.1}$	12^{H10}	36	(27)	19	16
	SCM-Y-40	A	SCM	40	16	30	$18^{+0.5}_{+0.3}$	10^{H10}	36	22	14	12
M14	SSD-Y-32	B	SSD	32	15	36	$10^{+0.3}_{+0.1}$	12	25	25	16	12
M14x1.5	SSD2-Y-32	A	SSD2	32, 40	16	30	$18^{+0.5}_{+0.3}$	10^{H10}	36	ø22	14	12
M16x1.5	CAV2-50-Y	A	CAV2, COV	50	25	50	$20^{+0.3}_{0}$	14^{H10}	42	(23)	18	15
M18x1.5	SCG-Y-50	A	SCG, JSG	50, 63	26	50	$20^{+0.3}_{+0.1}$	14^{H10}	40	(28)	24	14
	S1-Y-50	A	HCA, JSC3, SCA2	50	24	50	$18^{+0.4}_{+0.1}$	12^{H10}	36	(27)	19	16
	SSD-Y-50		SSD									
	S1-Y-63	A	HCA, JSC3, SCA2	63	24	50	$20^{+0.4}_{+0.1}$	14^{H10}	40	(27)	19	16
	SSD-Y-63		SSD									
	SCM-Y-50	A	SCM	50, 63	20	40	$22^{+0.5}_{+0.3}$	14^{H10}	44	28	20	16
	SSD2-Y-50	A	SSD2	50, 63	20	40	$22^{+0.5}_{+0.3}$	14^{H10}	44	ø28	20	16
M22x1.5	SCG-Y-80	A	SCG, JSG	80	31	65	$30^{+0.3}_{+0.1}$	22^{H10}	60	(40)	34	20
	CAV2-75-Y	A	CAV2, COV2	75, 100	30	65	$28^{+0.3}_{0}$	20^{H10}	60	(35)	28	22.5
	S1-Y-80	A	HCA, JSC3, SCA2	80	35	70	$28^{+0.4}_{+0.1}$	20^{H10}	56	(41)	30	25
	SSD-Y-80		SSD									
	SCM-Y-80	A	SCM	80	23	50	$28^{+0.5}_{+0.3}$	18^{H10}	56	38	27	21
	SSD2-Y-80	A	SSD2	80	23	50	$28^{+0.5}_{+0.3}$	18^{H10}	56	ø38	27	21
M26x1.5	SCG-Y-100	A	SCG, JSG	100	31	65	$30^{+0.3}_{+0.1}$	22^{H10}	60	(40)	34	20
	S1-Y-100	A	HCA, JSC3, SCA2	100	35	70	$28^{+0.4}_{+0.1}$	20^{H10}	56	(41)	30	25
	SSD-Y-100		SSD									
	SCM-Y-100	A	SCM	100	24	55	$32^{+0.5}_{+0.3}$	22^{H10}	64	44	31	24

Note: The A and B figures are a guide only. For details, refer to the accessory and external dimensions of each model.

Rod clevis (by thread size)

Thread size KK	Model No.	Shape code	Compatible model	Applicable bore size (ø)	AB	CA	CW	CD	CV	D	MB	RR
M26x1.5	SSD2-Y-100	A	SSD2	100	24	55	$32^{+0.5}_{+0.3}$	22^{H10}	64	ø44	31	24
M30x1.5	SCS2-125-Y	A	JSC4, SCS2	125	50	85	$32^{+0.4}_{+0.1}$	$25^{+0.084}_{0}$	64	(46)	35	27.5
			SSD	125, 140								
	SCS2-140-Y	A	JSC4, SCS2	140	50	90	$36^{+0.4}_{+0.1}$	$28^{+0.084}_{0}$	72	(46)	40	30
M36x1.5	SCS2-160-Y	A	JSC4, SCS2, SSD	160	60	105	$40^{+0.4}_{+0.1}$	$32^{+0.100}_{0}$	80	(55)	45	35
M40x1.5	SCS2-180-Y	A	JSC4, SCS2	180	65	115	$50^{+0.4}_{+0.1}$	$40^{+0.100}_{0}$	100	(60)	50	42.5
M45x1.5	SCS2-200-Y	A	SCS2	200	75	125	$50^{+0.4}_{+0.1}$	$40^{+0.100}_{0}$	100	(70)	50	42.5
M56x2	SCS2-250-Y	A	SCS2	250	88	150	$63^{+0.4}_{+0.1}$	$50^{+0.100}_{0}$	126	(85)	62	52.5

Note: The A and B figures are a guide only. For details, refer to the accessory and external dimensions of each model.

Custom-order

	Page
■ Change of rod end form	
How to order	Ending 86
·Rod end female thread (with recess) “N1”	Ending 87
·Rod end female thread “N11”	Ending 88
·Rod end no thread “N12”	Ending 89
·Rod end sphere R “N14”	Ending 90
·Rod end male thread ”N13”	Ending 91
·Rod end male thread (with recess) “N15”	Ending 92
·Rod end rod eye shape “N2”	Ending 93
·Rod end clevis shape “N21”	Ending 94
·Rod end with groove “N3”	Ending 95
·Rod end with groove sphere R “N31”	Ending 96
■ Specifying port/cushion needle position	Ending 98
■ Downsized port 1	Ending 99
■ Rotating assembly mounting bracket	Ending 100
■ Specifying trunnion position	Ending 101
■ Rod eye pin/clevis pin split pin	Ending 102
■ Fixing rod eye with pin	Ending 103
■ Rod eye pin/clevis pin split pin specifications, fixing rod eye with pin	Ending 104
■ Tie rod extension	Ending 105
■ Tie rod material SUS	Ending 106
■ Without bellows	Ending 106
■ Fluoro rubber only for scraper/rod packing	Ending 107
■ Other custom order products	
·Packing fluoro	Ending 108
·With 2 rod nuts	Ending 108
·Port symmetry	Ending 109
·Double solenoid	Ending 109
·Low speed	Ending 110
·With spigot	Ending 110

■ Change of rod end form (N**)

Contact CKD for details on specifications, dimensions, prices and delivery.

How to order

SCM - 00 - 40 B - 200 - N13 A23 WF25

Model No.

Compatible model

Model No.	Name
SCG	Tie rod cylinder
JSG	Tie rod cylinder with brake
SCP*3	Pencil shaped cylinder
CMK2	Medium bore size cylinder
SCA2	Medium bore size cylinder
SCS2	Large bore size cylinder
SCP*3-V	Miniature cylinder with valve
MDC2	Small direct mounting cylinder
SSD	Compact cylinder
SCM	Round shaped cylinder
ULK	Brake cylinder
JSC3/JSC4	Brake cylinder
FC*	Flat compact cylinder

Model No.

Refer to How to order for each model.

Rod end pattern

Code	Description
N1	Rod end female thread (with recess)
N11	Rod end female thread
N12	Rod end no thread
N14	Rod end sphere R
N13	Rod end male thread
N15	Rod end male thread (with recess)
N2	Rod end rod eye shape
N21	Rod end clevis bracket shape
N3	Rod end with groove
N31	Rod end with groove sphere R

Made-to-order dimensions

Refer to the dimensions list.

* Indicate only when the dimensions differ from the basic specifications.

⚠ Precautions for custom ordering rod ends

1. Depending on designated dimensions, the same strength as the standard product may not be attained.
2. Dimensions, tolerance, and finish not given in drawings are left to CKD.

⚠ Precautions for model No. selection

1. When some dimensions must be changed, indicate the dimension code after the rod end pattern code, then indicate the designated dimensions.
2. When designating multiple items, designate items in order from the dimension codes given at left of the dimensions table.
   (Example) Model No. - N13KKM18 x 1.5A40WF20
3. When thread size is specified, an end nut is not attached.
4. Basic dimensions of N11 are the same as the female thread specifications of each model.
   Basic dimensions of N13 are the same as the male thread specifications of each model.
   If designated dimensions are not required for N11 or N13, follow How to order for each model.

	(Incorrect)		(Correct)	
(Example)	SCM-00-40B-200-N13	→	SCM-00-40B-200	(since N13 is standard, code is not required)
	SSD-50-50-N11	→	SSD-50-50	(since N11 is standard, code is not required)
	SSD-50-50-N13	→	SSD-50-50-N	(“N” is used for the female thread code.)

   If the model does not have a code for the male or female threads in each model order, follow the rod end pattern given on this page.

5. Indicate the code following the rod end pattern after the model No. even if there are accessories, etc.

	(Incorrect)		(Correct)
(Example)	SSD-50-50-N13KKM8-CB	→	SSD-50-50-CB-N13KKM8

6. This custom model No. is used for input and may differ from the official model No.
7. Consult with CKD separately for how to order double rod and back to back.

Dimensions

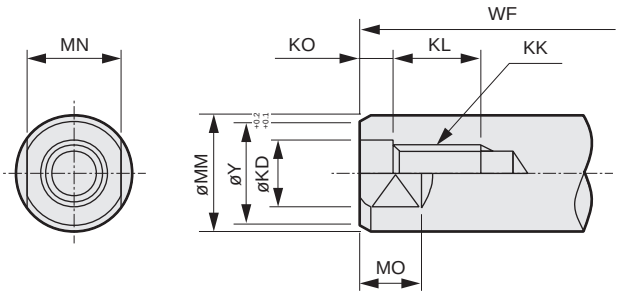

When manufacturing with dimensions listed on the dimensions table, indicate pattern code “N1”. When some dimensions must be changed, indicate the dimension code after the pattern code “N1”, then indicate the designated dimensions.

Example SCM-00-40B-200-N1WF25
WF standard dimension is 20, but this is available at 25.
When designating multiple items, indicate codes in order from the left.

*1: Dimensions of CMA2-E are shown in ( ).
*2: Dimensions of SSD-G2/G3/KG2/KG3 are shown in ( ).
*3: WF dimensions are different when selecting LB2 and FA of SSD. Contact CKD separately.
*4: Dimensions of SCM-LD are shown in ( ).
*5: Dimensions of CMK2-G2/G3 are shown in ( ).

Series	Bore size	øMM	KK	øKD	KO	KL	øY	MN	MO	WF
CMK2	20	10	M 5x0.8	5	2.5	10	8	8	5	24
CKV2	25	12	M 6x1	6	3	10	10	10	5	23(28)
ULK	32	12	M 6x1	6	3	10	10	10	5	23(28)
*5	40	14	M 8x1.25	8	4	14	12	12	6	23(28)
CMA2	20	10	M 5x0.8	5	2.5	10	8	8	5	24(11)
JSM2	30	12	M 6x1	6	3	10	10	10	5	23(7)
*1	40	14	M 8x1.25	8	4	14	12	12	6	23(6)
SCG	32	12	M 6x1	6	3	10	10	10	5	25
SCG	40	16	M 8x1.25	8	4	14	14	14	6	21
JSG	50	20	M 10x1.5	10	5	16	18	17	8	23
	63	20	M 10x1.5	10	5	16	18	17	8	23
	80	25	M 12x1.75	12	5.5	18	22	22	11	32
	100	30	M 16x2	16	6	24	27	27	13	32
SCA2	40	16	M 8x1.25	8	4	14	14	14	8	33.5
	50	20	M 10x1.5	10	5	16	18	17	8	37
	63	20	M 10x1.5	10	5	16	18	17	8	35
	80	25	M 12x1.75	12	5.5	18	22	22	11	48
	100	30	M 16x2	16	6	24	27	27	13	53
SCS2	125	32	M 18x2.5	18	7.5	26	29	27	14	65
	140	32	M 18x2.5	18	7.5	26	29	27	14	67
	160	40	M 20x2.5	20	7.5	28	36	36	15	71
	180	45	M 22x2.5	22	7.5	30	41	41	17	78
	200	50	M 24x3	24	9	32	46	46	20	88
	250	60	M 30x3.5	30	10.5	36	56	55	22	94
JSC3	40	16	M 8x1.25	8	4	14	14	14	8	30
	50	20	M 10x1.5	10	5	16	18	17	8	34
	63	20	M 10x1.5	10	5	16	18	17	8	30
	80	25	M 12x1.75	12	5.5	18	22	22	11	43.5
	100	30	M 16x2	16	6	24	27	27	13	48
JSC4	125	35	M 18x2.5	18	7.5	26	32	30	14	55
	140	35	M 18x2.5	18	7.5	26	32	30	14	57
	160	40	M 20x2.5	20	7.5	28	36	36	16	71.5
	180	45	M 22x2.5	22	7.5	30	41	41	18	78.5
SSD	12	6	M 3x0.5	3	2	6	5	5	3.5	3.5
	16	8	M 4x0.7	4	2.5	8	7	6	3.5	3.5(8.5)
	20	10	M 5x0.8	5	2.5	7	8	8	4.5	4.5(9.5)
	25	12	M 6x1	6	3	12	10	10	5	5(10)
	32	16	M 8x1.25	8	4	13	14	14	7	7(12)
	40	16	M 8x1.25	8	4	13	14	14	7	7(12)
	50	20	M10x1.5	10	4.5	15	18	17	8	8(13)
	63	20	M10x1.5	10	4.5	15	18	17	8	8(13)
	80	25	M16x2	16	6	21	22	22	10	10(15)
	100	30	M20x2.5	20	7.5	27	27	27	12	12(17)
	125	35	M22x2.5	22	7.5	30	33	30	11	16
	140	35	M22x2.5	22	7.5	30	33	30	11	16
	160	40	M24x3	24	9	33	38	36	14	17
FCD	25	12	M 5x0.8	5	2.5	9	10	10	5	5
	32	16	M 6x1	6	3	11	14	14	7	7
	40	16	M 8x1.25	8	4	13	14	14	7	8
	50	20	M 8x1.25	8	4	13	18	17	8	9.5
	63	20	M10x1.5	10	5	15	18	17	8	9.5
SCM	20	8	M 4x0.7	4	2.5	8	7	6	4	17(9)
	25	10	M 5x0.8	5	2.5	10	8	8	5	18(10)
	32	12	M 6x1	6	3	10	10	10	5.5	18(10)
	40	16	M 8x1.25	8	4	14	14	14	6	20(9)
	50	20	M10x1.5	10	5	16	18	17	8	23(10)
	63	20	M10x1.5	10	5	16	18	17	8	23(10)
	80	25	M12x1.75	12	5.5	18	22	22	11	31
	100	30	M16x2	16	6	24	27	27	13	31

Made-to-order product

Rod end female thread (pattern code “N11”)

Dimensions

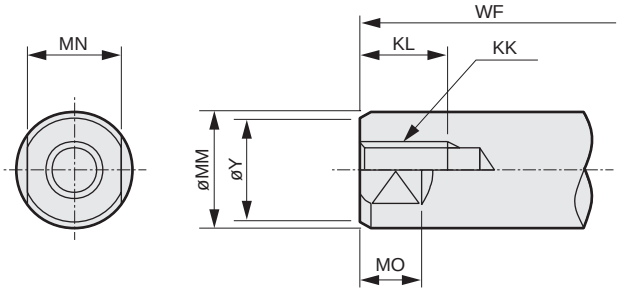

*1: “WF” is not listed in the MDC2 catalog. Dimensions of (O) should be regarded as “WF”.
*2: Y dimensions may be changed.

When manufacturing with dimensions listed on the dimensions table, indicate pattern code “N11”.
When some dimensions must be changed, indicate the dimension code after the pattern code “N11”, then indicate the designated dimensions.
Example SCM-00-40B-200-N11WF25
WF standard dimension is 20, but this is available at 25.

*3: Dimensions of CMA2-E are shown in ( ).
*4: Dimensions of SSD-G2/G3/KG2/KG3 are shown in ( ).
*5: WF dimensions are different when selecting LB2 and FA of SSD. Contact CKD separately.
*6: Dimensions of SCM-LD are shown in ( ).
*7: Dimensions of CMK2-G2/G3 are shown in ( ).

Series	Bore size	øMM	KK	KL	øY	MN	MO	WF
CMK2	20	10	M 5x0.8	10	8	8	5	24
CKV2	25	12	M 6x1	10	10	10	5	23(28)
ULK	32	12	M 6x1	10	10	10	5	23(28)
	40	14	M 8x1.25	14	12	12	6	23(28)
CMA2	20	10	M 5x0.8	10	8	8	5	24(11)
JSM2	30	12	M 6x1	10	10	10	5	23(7)
*3	40	14	M 8x1.25	14	12	12	6	23(6)
SCG	32	12	M 6x1	10	10	10	5	25
SCG	40	16	M 8x1.25	14	14	14	6	21
JSG	50	20	M10x1.5	16	18	17	8	23
	63	20	M10x1.5	16	18	17	8	23
	80	25	M12x1.75	18	22	22	11	32
	100	30	M16x2	24	27	27	13	32
SCA2	40	16	M 8x1.25	14	14	14	8	33.5
	50	20	M10x1.5	16	18	17	8	37
	63	20	M10x1.5	16	18	17	8	35
	80	25	M12x1.75	18	22	22	11	48
	100	30	M16x2	24	27	27	13	53
SCS2	125	32	M18x2.5	26	29	27	14	65
	140	32	M18x2.5	26	29	27	14	67
	160	40	M20x2.5	28	36	36	15	71
	180	45	M22x2.5	30	41	41	17	78
	200	50	M24x3	32	46	46	20	88
	250	60	M30x3.5	36	56	55	22	94
JSC3	40	16	M 8x1.25	14	14	14	8	30
	50	20	M10x1.5	16	18	17	8	34
	63	20	M10x1.5	16	18	17	8	30
	80	25	M12x1.75	18	22	22	11	43.5
	100	30	M16x2	24	27	27	13	48
JSC4	125	35	M18x2.5	26	32	30	14	55
	140	35	M18x2.5	26	32	30	14	57
	160	40	M20x2.5	28	36	36	16	71.5
	180	45	M22x2.5	30	41	41	18	78.5
SSD	12	6	M 3x0.5	6	5	5	3.5	3.5
	16	8	M 4x0.7	8	7	6	3.5	3.5(8.5)
	20	10	M 5x0.8	7	8	8	4.5	4.5(9.5)
	25	12	M 6x1	12	10	10	5	5(10)
	32	16	M 8x1.25	13	14	14	7	7(12)
	40	16	M 8x1.25	13	14	14	7	7(12)
	50	20	M10x1.5	15	18	17	8	8(13)
	63	20	M10x1.5	15	18	17	8	8(13)
	80	25	M16x2	21	22	22	10	10(15)
	100	30	M20x2.5	27	27	27	12	12(17)
	125	35	M22x2.5	30	33	30	11	16
	140	35	M22x2.5	30	33	30	11	16
	160	40	M24x3	33	38	36	14	17
FCD	25	12	M 5x0.8	9	10	10	5	5
	32	16	M 6x1	11	14	14	7	7
	40	16	M 8x1.25	13	14	14	7	8
	50	20	M 8x1.25	13	18	17	8	9.5
	63	20	M10x1.5	15	18	17	8	9.5
SCM	20	8	M 4x0.7	8	7	6	4	17(9)
	25	10	M 5x0.8	10	8	8	5	18(10)
	32	12	M 6x1	10	10	10	5.5	18(10)
	40	16	M 8x1.25	14	14	14	6	20(9)
	50	20	M10x1.5	16	18	17	8	23(10)
	63	20	M10x1.5	16	18	17	8	23(10)
	80	25	M12x1.75	18	22	22	11	31
	100	30	M16x2	24	27	27	13	31
MDC2	6	4	M2.5x0.45	4	3.5	3.5	2.5	3
*1	8	5	M 3x0.5	5	4.5	4.5	2.5	3
	10	6	M 3x0.5	5	5	5	2.5	3

Dimensions

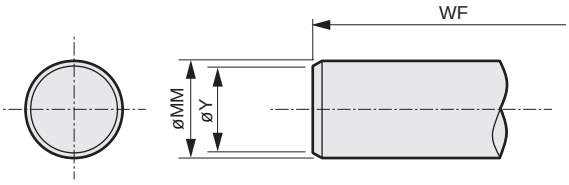

*1: “WF” is not listed in the SCP*3 catalog. Dimensions of “13 mm” should be regarded as “WF”.
*2: SCP*3-V is also the same.
*3: For SSD-KU/SCM-U/SCA2-U (low friction cylinder), this pattern is not available.
*4: “WF “ is not listed in the MDC2 catalog. Dimensions of (O) should be regarded as “WF”.

When manufacturing with dimensions listed on the dimensions table, indicate pattern code “N12”. When some dimensions must be changed, indicate the dimension code after the pattern code “N12”, then indicate the designated dimensions.

Example
SCM-00-40B-200-N12WF25
WF standard dimension is 20, but this is available at 25.

*5: Dimensions of CMA2-E are shown in ( ).
*6: Dimensions of SSD-G2/G3/KG2/KG3 are shown in ( ).
*7: WF dimensions are different when selecting LB2 and FA of SSD. Contact CKD separately.
*8: Dimensions of SCM-LD are shown in ( ).
*9: Dimensions of CMK2-G2/G3 are shown in ( ).

Series	Bore size	øMM	øY	WF
SCP*3	6	3	2.5	13
*1	10	4	3.5	13
	16	5	4.5	13
CMK2	20	10	8	24
CKV2	25	12	10	23(28)
ULK	32	12	10	23(28)
*9	40	14	12	23(28)
CMA2	20	10	8	24(11)
JSM2	30	12	10	23(7)
*5	40	14	12	23(6)
SCG	32	12	10	25
SSG	40	16	14	21
	50	20	18	23
	63	20	18	23
	80	25	22	32
	100	30	27	32
SCA2	40	16	14	33.5
*3	50	20	18	37
	63	20	18	35
	80	25	22	48
	100	30	27	53
SCS2	125	32	29	65
	140	32	29	67
	160	40	36	71
	180	45	41	78
	200	50	46	88
	250	60	56	94
JSC3	40	16	14	30
	50	20	18	34
	63	20	18	30
	80	25	22	43.5
	100	30	27	48
JSC4	125	35	32	55
	140	35	32	57
	160	40	36	71.5
	180	45	41	78.5
SCP*3-V	10	4	3.5	13
*2	16	5	4.5	13
SSD	12	6	5	3.5
*3	16	8	7	3.5(8.5)
	20	10	8	4.5(9.5)
	25	12	10	5(10)
	32	16	14	7(12)
	40	16	14	7(12)
	50	20	18	8(13)
	63	20	18	8(13)
	80	25	22	10(15)
	100	30	27	12(17)
	125	35	33	16
	140	35	33	16
	160	40	38	17
FCD	25	12	10	5
	32	16	14	7
	40	16	14	8
	50	20	18	9.5
	63	20	18	9.5
SCM	20	8	7	17(9)
*3	25	10	8	18(10)
	32	12	10	18(10)
	40	16	14	20(9)
	50	20	18	23(10)
	63	20	18	23(10)
	80	25	22	31
	100	30	27	31
MDC2	4	2	1.5	3
*4	6	4	3.5	3
	8	5	4.5	3
	10	6	5	3

Made-to-order product

Rod end sphere R (pattern code “N14”)

Dimensions

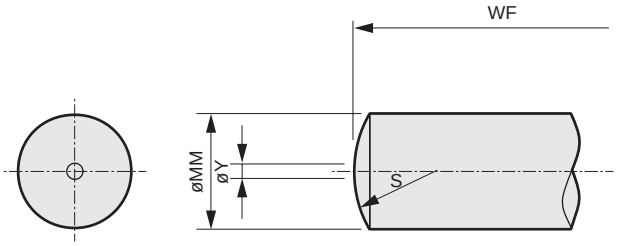

*1: “WF” is not listed in the SCP*3 catalog. Dimensions of “13 mm” should be regarded as “WF”.
*2: SCP*3-V is also the same.
*3: For SSD-KU/SCM-U/SCA2-U (low friction cylinder), this pattern is not available.

When manufacturing with dimensions listed on the dimensions table, indicate pattern code “N14”.
When some dimensions must be changed, indicate the dimension code after the pattern code “N14”, then indicate the designated dimensions.
Example SCM-00-40B-200-N14WF25
WF standard dimension is 20, but this is available at 25.
*4: Dimensions of SSD-G2/G3/KG2/KG3 are shown in ( ).
*5: WF dimensions are different when selecting LB2 and FA of SSD. Contact CKD separately.
*6: Dimensions of SCM-LD are shown in ( ).
*7: Dimensions of CMK2-G2/G3 are shown in ( ).

Series	Bore size	øMM	øY	S	WF
SCP*3	6	3	0.3	3	13
*1	10	4	0.3	4	13
	16	5	0.3	5	13
CMK2	20	10	0.5	10	24
CKV2	25	12	0.5	12	23(28)
ULK	32	12	0.5	12	23(28)
*7	40	14	0.5	14	23(28)
SCG	32	12	0.5	12	25
SCG	40	16	1	16	21
JSG	50	20	1	20	23
	63	20	1	20	23
	80	25	1	25	32
	100	30	1	30	32
SCA2	40	16	1	16	33.5
	50	20	1	20	37
	63	20	1	20	35
	80	25	1	25	48
	100	30	1	30	53
SCS2	125	32	2	32	65
	140	32	2	32	67
	160	40	2	40	71
	180	45	2	45	78
	200	50	2	50	88
	250	60	2	60	94
JSC3	40	16	1	16	30
	50	20	1	20	34
	63	20	1	20	30
	80	25	1	25	43.5
	100	30	1	30	48
JSC4	125	35	2	35	55
	140	35	2	35	57
	160	40	2	40	71.5
	180	45	2	45	78.5
SCP*3-V	10	4	0.3	4	13
*2	16	5	0.3	5	13
SSD	12	6	0.5	6	3.5
*3	16	8	0.5	8	3.5(8.5)
	20	10	0.5	10	4.5(9.5)
	25	12	0.5	12	5(10)
	32	16	1	16	7(12)
	40	16	1	16	7(12)
	50	20	1	20	8(13)
	63	20	1	20	8(13)
	80	25	1	25	10(15)
	100	30	1	30	12(17)
	125	35	2	35	16
	140	35	2	35	16
	160	40	2	40	17
SCM	20	8	0.5	8	17(9)
*3	25	10	0.5	10	18(10)
	32	12	0.5	12	18(10)
	40	16	1	16	20(9)
	50	20	1	20	23(10)
	63	20	1	20	23(10)
	80	25	1	25	31
	100	30	1	30	31

Dimensions

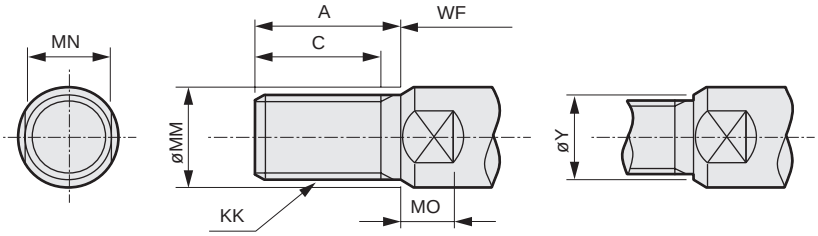

*1: The "WF" is not listed in the SCP*3 catalog. Dimensions of "13mm" should be regarded as "WF".
*2: SCP*3-V is also the same.
*3: When thread size is specified, an end nut is not attached. Y dimensions may be changed.

When manufacturing with dimensions listed on the dimensions table, indicate pattern code "N13". When some dimensions must be changed, indicate the dimension code after the pattern code “N13”, then indicate the designated dimensions.
Example SCM-00-40B-200-N13A23WF27
This is available at 27 instead of WF standard dimension of 20, and 23 instead of A standard dimension of 30. When C dimension is not specified, the product is manufactured with standard differential dimension of (A-C).
*4: CMA2-E is indicated with dimensions in ( ).
*5: SSD-G2/G3/KG2/KG3 is the dimensions in ( ).
*6: WF dimensions are different when selecting LB2 and FA of SSD. Contact CKD separately.
*7: Dimensions of SCM-LD are shown in ( ).
*8: CMK2-G2/G3 is the dimensions in ( ).

Series	Bore size	øMM	KK	C	A	øY	MN	MO	WF
SCP*3	6	3	M 3 x 0.5	15	-	-	-	-	13
*1	10	4	M 4 x 0.7	15	-	-	-	-	13
	16	5	M 5 x 0.8	15	-	-	-	-	13
CMK2	20	10	M 8 x 1	18	20	8	8	5	24
CKV2	25	12	M 10 x 1.25	20	23	10	10	5	23 (28)
ULK	32	12	M 10 x 1.25	20	23	10	10	5	23 (28)
*8	40	14	M 12 x 1.5	22	25	12	12	6	23 (28)
CMA2	20	10	M 8 x 1	18	20	8	8	5	24 (11)
JSM2	30	12	M 10 x 1.25	20	23	10	10	5	23 (7)
*4	40	14	M 12 x 1.5	22	25	12	12	6	23 (6)
SCG	32	12	M 10 x 1.25	19.5	22	10	10	5.5	25
SCG	40	16	M 14 x 1.5	27	30	14	14	6	21
JSG	50	20	M 18 x 1.5	32	35	18	17	8	23
	63	20	M 18 x 1.5	32	35	18	17	8	23
	80	25	M 22 x 1.5	37	40	22	22	11	32
	100	30	M 26 x 1.5	37	40	26	27	13	32
SCA2	40	16	M 14 x 1.5	20	22	14	14	8	33.5
	50	20	M 18 x 1.5	26	28	18	17	8	37
	63	20	M 18 x 1.5	26	28	18	17	8	35
	80	25	M 22 x 1.5	34	36	22	22	11	48
	100	30	M 26 x 1.5	43	45	26	27	13	53
SCS2	125	32	M 30 x 1.5	47	50	30	27	14	65
	140	32	M 30 x 1.5	47	50	30	27	14	67
	160	40	M 36 x 1.5	53	56	36	36	15	71
	180	45	M 40 x 1.5	60	63	40	41	17	78
	200	50	M 45 x 1.5	69	72	45	46	20	88
	250	60	M 56 x 2	84	88	56	55	22	94
JSC3	40	16	M 14 x 1.5	20	22	14	14	8	30
	50	20	M 18 x 1.5	26	28	18	17	8	34
	63	20	M 18 x 1.5	26	28	18	17	8	30
	80	25	M 22 x 1.5	34	36	22	22	11	43.5
	100	30	M 26 x 1.5	43	45	26	27	13	48
JSC4	125	35	M 30 x 1.5	47	50	30	30	14	55
	140	35	M 30 x 1.5	47	50	30	30	14	57
	160	40	M 36 x 1.5	53	56	36	36	16	71.5
	180	45	M 40 x 1.5	60	63	40	41	18	78.5
SCP*3-V	10	4	M 4 x 0.7	15	-	-	-	-	13
*2	16	5	M 5 x 0.8	15	-	-	-	-	13
SSD	12	6	M 5 x 0.8	9	10.5	5	5	3.5	3.5
	16	8	M 6 x 1	10	12	6	6	3.5	3.5 (8.5)
	20	10	M 8 x 1.25	12	14	8	8	4.5	4.5 (9.5)
	25	12	M 10 x 1.25	15	17.5	10	10	5	5 (10)
	32	16	M 14 x 1.5	20.5	23.5	14	14	5	5 (10)
	40	16	M 14 x 1.5	20.5	23.5	14	14	5	5 (10)
	50	20	M 18 x 1.5	26	28.5	18	17	5	5 (10)
	63	20	M 18 x 1.5	26	28.5	18	17	5	5 (10)
	80	25	M 22 x 1.5	32.5	35.5	22	22	8	8 (13)
	100	30	M 26 x 1.5	32.5	35.5	26	27	8	8 (13)
	125	35	M 30 x 1.5	42	45	30	30	11	13
	140	35	M 30 x 1.5	42	45	30	30	11	13
	160	40	M 36 x 1.5	47	50	36	36	11	14
FCD	25	12	M 10 x 1.25	20	22	10	10	4	5
	32	16	M 14 x 1.5	20	22	14	14	6	7
	40	16	M 14 x 1.5	20	22	14	14	6	7
	50	20	M 18 x 1.5	26	28	18	17	8	8
	63	20	M 18 x 1.5	26	28	18	17	8	8
SCM	20	8	M 8 x 1.25	16	18	-	6	4	17 (9)
	25	10	M 10 x 1.25	20	22	-	8	5	18 (10)
	32	12	M 10 x 1.25	20	22	10	10	5.5	18 (10)
	40	16	M 14 x 1.5	27	30	14	14	6	20 (9)
	50	20	M 18 x 1.5	32	35	18	17	8	23 (10)
	63	20	M 18 x 1.5	32	35	18	17	8	23 (10)
	80	25	M 22 x 1.5	37	40	22	22	11	31
	100	30	M 26 x 1.5	37	40	26	27	13	31
MDC2	6	4	M 3 x 0.5	6	8	3.5	3.5	2.5	3
*3	8	5	M 4 x 0.7	7	9	4.5	4.5	2.5	3
	10	6	M 5 x 0.8	9	11	5	5	2.5	3

Made-to-order product

Rod end male thread (with recess) (pattern code “N15”)

Dimensions

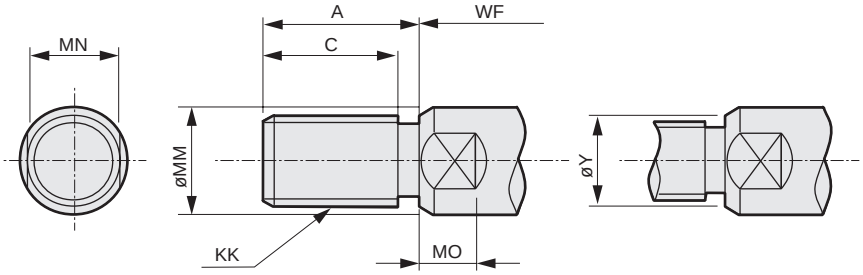

*1: When thread size is specified, an end nut is not attached.Y dimensions may be changed.

When manufacturing with dimensions listed on the dimensions table, indicate pattern code "N15". When some dimensions must be changed, indicate the dimension code after the pattern code "N15", then indicate the designated dimensions.

Example SCM-00-40B-200-N15C20A23

This is available at 20 instead of C standard dimension of 27, and 23 instead of A standard dimension of 30. When C dimension is not specified, the product is manufactured with standard

Available with differential dimension of (A-C).

*2: CMA2-E is indicated with dimensions in ( ).
*3: SSD-G2/G3/KG2/KG3 is the dimensions in ( ).
*4: WF dimensions are different when selecting LB2 and FA of SSD. Contact CKD separately.
*5: Dimensions of SCM-LD are shown in ( ).
*6: CMK2-G2/G3 is the dimensions in ( ).

Series	Bore size	øMM	KK	C	A	øY	MN	MO	WF
CMK2	20	10	M 8 x 1	18	20	8	8	5	24
CKV2	25	12	M 10 x 1.25	20	23	10	10	5	23 (28)
ULK	32	12	M 10 x 1.25	20	23	10	10	5	23 (28)
*6	40	14	M 12 x 1.5	22	25	12	12	6	23 (28)
CMA2	20	10	M 8 x 1	18	20	8	8	5	24 (11)
JSM2	30	12	M 10 x 1.25	20	23	10	10	5	23 (7)
*2	40	14	M 12 x 1.5	22	25	12	12	6	23 (6)
SCG	32	12	M 10 x 1.25	19.5	22	10	10	5	25
SCG	40	16	M 14 x 1.5	27	30	14	14	6	21
JSG	50	20	M 18 x 1.5	32	35	18	17	8	23
	63	20	M 18 x 1.5	32	35	18	17	8	23
	80	25	M 22 x 1.5	37	40	22	22	11	32
	100	30	M 26 x 1.5	37	40	26	27	13	32
SCA2	40	16	M 14 x 1.5	20	22	14	14	8	33.5
	50	20	M 18 x 1.5	26	28	18	17	8	37
	63	20	M 18 x 1.5	26	28	18	17	8	35
	80	25	M 22 x 1.5	34	36	22	22	11	48
	100	30	M 26 x 1.5	43	45	26	27	13	53
SCS2	125	32	M 30 x 1.5	47	50	30	27	14	65
	140	32	M 30 x 1.5	47	50	30	27	14	67
	160	40	M 36 x 1.5	53	56	36	36	15	71
	180	45	M 40 x 1.5	60	63	40	41	17	78
	200	50	M 45 x 1.5	69	72	45	46	20	88
	250	60	M 56 x 2	84	88	56	55	22	94
JSC3	40	16	M 14 x 1.5	20	22	14	14	8	30
	50	20	M 18 x 1.5	26	28	18	17	8	34
	63	20	M 18 x 1.5	26	28	18	17	8	30
	80	25	M 22 x 1.5	34	36	22	22	11	43.5
	100	30	M 26 x 1.5	43	45	26	27	13	48
JSC4	125	35	M 30 x 1.5	47	50	30	30	14	55
	140	35	M 30 x 1.5	47	50	30	30	14	57
	160	40	M 36 x 1.5	53	56	36	36	16	71.5
	180	45	M 40 x 1.5	60	63	40	41	18	78.5
SSD	12	6	M 5 x 0.8	9	10.5	5	5	3.5	3.5
	16	8	M 6 x 1	10	12	6	6	3.5	3.5 (8.5)
	20	10	M 8 x 1.25	12	14	8	8	4.5	4.5 (9.5)
	25	12	M 10 x 1.25	15	17.5	10	10	5	5 (10)
	32	16	M 14 x 1.5	20.5	23.5	14	14	5	5 (10)
	40	16	M 14 x 1.5	20.5	23.5	14	14	5	5 (10)
	50	20	M 18 x 1.5	26	28.5	18	17	5	5 (10)
	63	20	M 18 x 1.5	26	28.5	18	17	5	5 (10)
	80	25	M 22 x 1.5	32.5	35.5	22	22	8	8 (13)
	100	30	M 26 x 1.5	32.5	35.5	26	27	8	8 (13)
	125	35	M 30 x 1.5	42	45	30	30	11	13
	140	35	M 30 x 1.5	42	45	30	30	11	13
	160	40	M 36 x 1.5	47	50	36	36	11	14
FCD	25	12	M 10 x 1.25	20	22	10	10	4	5
	32	16	M 14 x 1.5	20	22	14	14	6	7
	40	16	M 14 x 1.5	20	22	14	14	6	7
	50	20	M 18 x 1.5	26	28	18	17	8	8
	63	20	M 18 x 1.5	26	28	18	17	8	8
SCM	20	8	-	-	-	-	-	-	-
	25	10	-	-	-	-	-	-	-
	32	12	M 10 x 1.25	20	22	10	10	5.5	18 (10)
	40	16	M 14 x 1.5	27	30	14	14	6	20 (9)
	50	20	M 18 x 1.5	32	35	18	17	8	23 (10)
	63	20	M 18 x 1.5	32	35	18	17	8	23 (10)
	80	25	M 22 x 1.5	37	40	22	22	11	31
	100	30	M 26 x 1.5	37	40	26	27	13	31

Dimensions

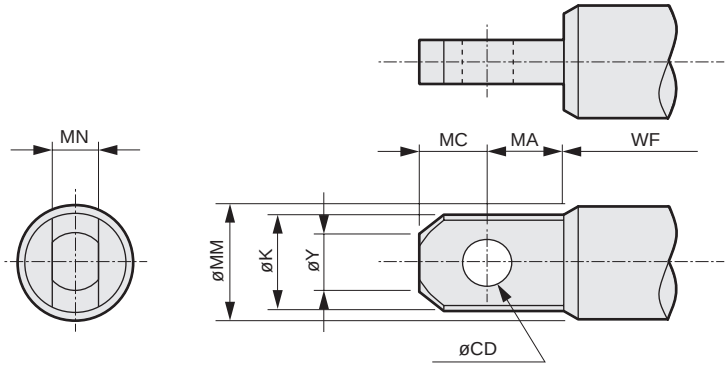

Tolerance

Code	Dimensions	Tolerance
CD	Tolerances at right are used uniformly regardless of dimensions	H10
MN	10 or less	-0.1 -0.2
	10< ≤30	-0.1 -0.3
	30< ≤80	-0.1 -0.4

When manufacturing with dimensions listed on the dimensions table, indicate pattern code “N2”.
When some dimensions must be changed, indicate the dimension code after the pattern code “N2”, then indicate the designated dimensions.
Example: SCM-00-40B-200-N2CD5MA7.5
CD standard dimension is 6, but this is available at 5.
MA standard dimension is 9, but this is manufactured at 7.5.

*1: Dimensions of SSD-G2/G3/KG2/KG3 are shown in ( ).
*2: WF dimensions are different when selecting LB2 and FA of SSD. Contact CKD separately.
*3: Dimensions of SCM-LD are shown in ( ).
*4: Dimensions of CMK2-G2/G3 are shown in ( ).

Series	Bore size	øMM	øCD	MN	MA	MC	øY	øK	WF
CMK2	20	10	4	4	6	4	5.4	9	24
CKV2	25	12	5	5	7.5	5	6.6	11	23(28)
ULK	32	12	5	5	7.5	5	6.6	11	23(28)
*4	40	14	6	6	9	6	7.8	13	23(28)
SCG	32	12	5	5	7.5	5	6.6	11	25
SCG	40	16	6	6	9	6	9	15	21
JSG	50	20	8	8	12	8	11.4	19	23
	63	20	8	8	12	8	11.4	19	23
	80	25	10	10	15	10	14.4	24	32
	100	30	12	12	18	12	17.4	29	32
SCA2	40	16	6	6	9	6	9	15	33.5
	50	20	8	8	12	8	11.4	19	37
	63	20	8	8	12	8	11.4	19	35
	80	25	10	10	15	10	14.4	24	48
	100	30	12	12	18	12	17.4	29	53
SCS2	125	32	14	14	21	14	19.8	30	65
	140	32	14	14	21	14	19.8	30	67
	160	40	16	16	24	16	22.8	38	71
	180	45	18	18	27	18	25.8	43	78
	200	50	20	20	30	20	28.8	48	88
	250	60	24	24	36	24	34.8	58	94
JSC3	40	16	6	6	9	6	9	15	30
	50	20	8	8	12	8	11.4	19	34
	63	20	8	8	12	8	11.4	19	30
	80	25	10	10	15	10	14.4	24	43.5
	100	30	12	12	18	12	17.4	29	48
JSC4	125	35	14	14	21	14	19.8	33	55
	140	35	14	14	21	14	19.8	33	57
	160	40	16	16	24	16	22.8	38	71.5
	180	45	18	18	27	18	25.8	43	78.5
SSD	12	6	-	-	-	-	-	-	-
	16	8	-	-	-	-	-	-	-
	20	10	4	4	6	4	5.4	9	4.5(9.5)
	25	12	5	5	7.5	5	6.6	11	5(10)
	32	16	6	6	9	6	9	15	5(10)
	40	16	6	6	9	6	9	15	5(10)
	50	20	8	8	12	8	11.4	19	5(10)
	63	20	8	8	12	8	11.4	19	5(13)
	80	25	10	10	15	10	14.4	24	8(13)
	100	30	12	12	18	12	17.4	29	8(13)
	125	35	14	14	21	14	19.8	33	13
	140	35	14	14	21	14	19.8	33	13
	160	40	16	16	24	16	22.8	38	14
SCM	20	8	-	-	-	-	-	-	-
	25	10	4	4	6	4	5.4	9	18(10)
	32	12	5	5	7.5	5	6.6	11	18(10)
	40	16	6	6	9	6	9	15	20(9)
	50	20	8	8	12	8	11.4	19	23(10)
	63	20	8	8	12	8	11.4	19	23(10)
	80	25	10	10	15	10	14.4	24	31
	100	30	12	12	18	12	17.4	29	31

Made-to-order product

Rod end clevis shape (pattern code “N21”)

Dimensions

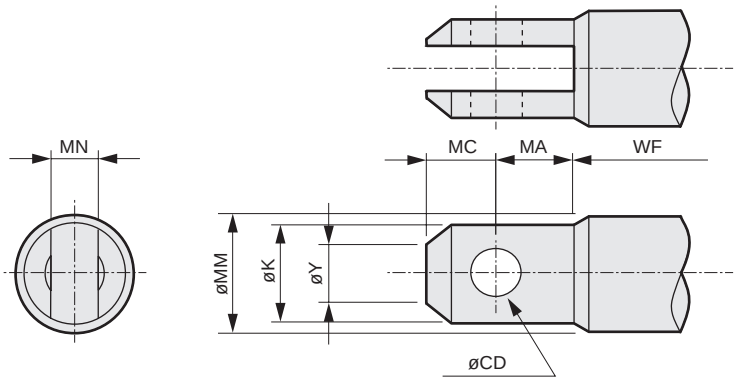

Tolerance

Code	Dimensions	Tolerance
CD	Tolerances at right are used uniformly, regardless of dimensions	H10
MN	10 or less	+0.2 +0.1
	10< ≤30	+0.3 +0.1
	30< ≤80	+0.4 +0.1

When manufacturing with dimensions listed on the dimensions table, indicate pattern code “N21”.
When some dimensions must be changed, indicate the dimension code after the pattern code “N21”, then indicate the designated dimensions.

Example: SCM-00-40B-200-N21CD5MA7.5
CD standard dimension is 6, but this is available at 5.
MA standard dimension is 9, but this is manufactured at 7.5.

*1: Dimensions of SSD-G2/G3/KG2/KG3 are shown in ( ).
*2: WF dimensions are different when selecting LB2 and FA of SSD. Contact CKD separately.
*3: Dimensions of SCM-LD are shown in ( ).
*4: Dimensions of CMK2-G2/G3 are shown in ( ).

Series	Bore size	øMM	øCD	MN	MA	MC	øY	øK	WF
CMK2	20	10	4	4	6	4	5.4	9	24
CKV2	25	12	5	5	7.5	5	6.6	11	23(28)
ULK	32	12	5	5	7.5	5	6.6	11	23(28)
*4	40	14	6	6	9	6	7.8	13	23(28)
SCG	32	12	5	5	7.5	5	6.6	11	25
SCG	40	16	6	6	9	6	9	15	21
JSG	50	20	8	8	12	8	11.4	19	23
	63	20	8	8	12	8	11.4	19	23
	80	25	10	10	15	10	14.4	24	32
	100	30	12	12	18	12	17.4	29	32
SCA2	40	16	6	6	9	6	9	15	33.5
	50	20	8	8	12	8	11.4	19	37
	63	20	8	8	12	8	11.4	19	35
	80	25	10	10	15	10	14.4	24	48
	100	30	12	12	18	12	17.4	29	53
SCS2	125	32	14	14	21	14	19.8	30	65
	140	32	14	14	21	14	19.8	30	67
	160	40	16	16	24	16	22.8	38	71
	180	45	18	18	27	18	25.8	43	78
	200	50	20	20	30	20	28.8	48	88
	250	60	24	24	36	24	34.8	58	94
JSC3	40	16	6	6	9	6	9	15	30
	50	20	8	8	12	8	11.4	19	34
	63	20	8	8	12	8	11.4	19	30
	80	25	10	10	15	10	14.4	24	43.5
	100	30	12	12	18	12	17.4	29	48
JSC4	125	35	14	14	21	14	19.8	33	55
	140	35	14	14	21	14	19.8	33	57
	160	40	16	16	24	16	22.8	38	71.5
	180	45	18	18	27	18	25.8	43	78.5
SSD	12	6	-	-	-	-	-	-	-
	16	8	-	-	-	-	-	-	-
	20	10	4	4	6	4	5.4	9	4.5(9.5)
	25	12	5	5	7.5	5	6.6	11	5(10)
	32	16	6	6	9	6	9	15	5(10)
	40	16	6	6	9	6	9	15	5(10)
	50	20	8	8	12	8	11.4	19	5(10)
	63	20	8	8	12	8	11.4	19	5(10)
	80	25	10	10	15	10	14.4	24	8(13)
	100	30	12	12	18	12	17.4	29	8(13)
	125	35	14	14	21	14	19.8	33	13
	140	35	14	14	21	14	19.8	33	13
	160	40	16	16	24	16	22.8	38	14
SCM	20	8	-	-	-	-	-	-	-
	25	10	4	4	6	4	5.4	9	18(10)
	32	12	5	5	7.5	5	6.6	1	18(10)
	40	16	6	6	9	6	9	15	20(9)
	50	20	8	8	12	8	11.4	19	23(10)
	63	20	8	8	12	8	11.4	19	23(10)
	80	25	10	10	15	10	14.4	24	31
	100	30	12	12	18	12	17.4	29	31

Dimensions

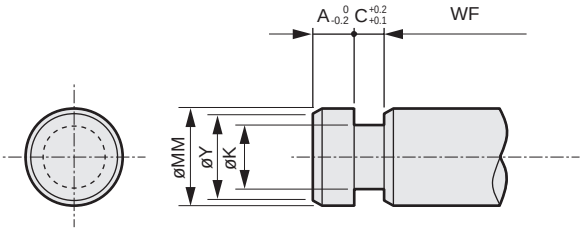

When manufacturing with dimensions listed on the dimensions table, indicate pattern code “N3”.
When some dimensions must be changed, indicate the dimension code after the pattern code “N3”, then indicate the designated dimensions.
Example: SCM-00-40B-200-N3WF25
WF standard dimension is 20, but this is available at 25.
*1: Dimensions of SSD-G2/G3/KG2/KG3 are shown in ( ).
*2: WF dimensions are different when selecting LB2 and FA of SSD. Contact CKD separately.
*3: Dimensions of SCM-LD are shown in ( ).
*4: Dimensions of CMK2-G2/G3 are shown in ( ).

Series	Bore size	øMM	øK	C	A	øY	WF
CMK2	20	10	6	4	4	8	24
CKV2	25	12	7.2	4.8	4.8	10	23(28)
ULK	32	12	7.2	4.8	4.8	10	23(28)
*4	40	14	8.4	5.6	5.6	12	23(28)
SCG	32	12	7.2	4.8	4.8	10	25
SCG	40	16	9.6	6.4	6.4	14	21
JSG	50	20	12	8	8	18	23
	63	20	12	8	8	18	23
	80	25	15	10	10	22	32
	100	30	18	12	12	27	32
SCA2	40	16	9.6	6.4	6.4	14	33.5
	50	20	12	8	8	18	37
	63	20	12	8	8	18	35
	80	25	15	10	10	22	48
	100	30	18	12	12	27	53
SCS2	125	32	21	14	14	29	65
	140	32	21	14	14	29	67
	160	40	24	16	16	36	71
	180	45	27	18	18	41	78
	200	50	30	20	20	46	88
	250	60	36	22	22	56	94
JSC3	40	16	9.6	6.4	6.4	14	30
	50	20	12	8	8	18	34
	63	20	12	8	8	18	30
	80	25	15	10	10	22	43.5
	100	30	18	12	12	27	48
JSC4	125	35	21	14	14	32	55
	140	35	21	14	14	32	57
	160	40	24	16	16	36	71.5
	180	45	27	18	18	41	78.5
SSD	12	6	-	-	-	-	-
	16	8	-	-	-	-	-
	20	10	6	4	4	8	4.5(9.5)
	25	12	7.2	4.8	4.8	10	5(10)
	32	16	9.6	6.4	6.4	14	7(12)
	40	16	9.6	6.4	6.4	14	7(12)
	50	20	12	8	8	18	8(13)
	63	20	12	8	8	18	8(13)
	80	25	15	10	10	22	10(15)
	100	30	18	12	12	27	12(17)
	125	35	21	14	14	33	16
	140	35	21	14	14	33	16
	160	40	24	16	16	38	17
SCM	20	8	-	-	-	-	-
	25	10	6	4	4	8	18(10)
	32	12	7.2	4.8	4.8	10	18(10)
	40	16	9.6	6.4	6.4	14	20(9)
	50	20	12	8	8	18	23(10)
	63	20	12	8	8	18	23(10)
	80	25	15	10	10	22	31
	100	30	18	12	12	27	31

Made-to-order product

Rod end with groove sphere R (pattern code “N31”)

Dimensions

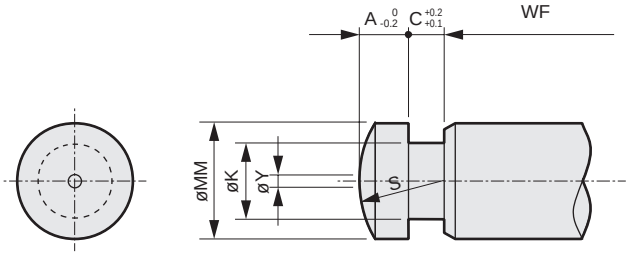

When manufacturing with dimensions listed on the dimensions table, indicate pattern code “N31”. When some dimensions must be changed, indicate the dimension code after the pattern code “N31”, then indicate the designated dimensions.

Example SCM-00-40B-200-N31WF25

WF standard dimension is 20, but this is available at 25.

*1: Dimensions of SSD-G2/G3/KG2/KG3 are shown in ( ).

*2: WF dimensions are different when selecting LB2 and FA of SSD. Contact CKD separately.

*3: Dimensions of SCM-LD are shown in ( ).

*4: Dimensions of CMK2-G2/G3 are shown in ( ).

Series	Bore size	øMM	øK	C	A	S	øY	WF
CMK2	20	10	6	4	4	10	0.5	24
CKV2	25	12	7.2	4.8	4.8	12	0.5	23(28)
ULK	32	12	7.2	4.8	4.8	12	0.5	23(28)
*4	40	14	8.4	5.6	5.6	14	0.5	23(28)
SCG	32	12	7.2	4.8	4.8	12	0.5	25
SCG	40	16	9.6	6.4	6.4	16	1	21
JSG	50	20	12	8	8	20	1	23
	63	20	12	8	8	20	1	23
	80	25	15	10	10	25	1	32
	100	30	18	12	12	30	1	32
SCA2	40	16	9.6	6.4	6.4	16	1	33.5
	50	20	12	8	8	20	1	37
	63	20	12	8	8	20	1	35
	80	25	15	10	10	25	1	48
	100	30	18	12	12	30	1	53
SCS2	125	32	21	14	14	32	1	65
	140	32	21	14	14	32	2	67
	160	40	24	16	16	40	2	71
	180	45	27	18	18	45	2	78
	200	50	30	20	20	50	2	88
	250	60	36	22	22	60	2	94
JSC3	40	16	9.6	6.4	6.4	16	1	30
	50	20	12	8	8	20	1	34
	63	20	12	8	8	20	1	30
	80	25	15	10	10	25	1	43.5
	100	30	18	12	12	30	1	48
JSC4	125	35	21	14	14	35	1	55
	140	35	21	14	14	35	2	57
	160	40	24	16	16	40	2	71.5
	180	45	27	18	18	45	2	78.5
SSD	12	6	-	-	-	-	-	-
	16	8	-	-	-	-	-	-
	20	10	6	4	4	10	0.5	4.5(9.5)
	25	12	7.2	4.8	4.8	12	0.5	5(10)
	32	16	9.6	6.4	6.4	16	1	7(12)
	40	16	9.6	6.4	6.4	16	1	7(12)
	50	20	12	8	8	20	1	8(13)
	63	20	12	8	8	20	1	8(13)
	80	25	15	10	10	25	1	10(15)
	100	30	18	12	12	30	1	12(17)
	125	35	21	14	14	35	2	16
	140	35	21	14	14	35	2	16
	160	40	24	16	16	40	2	17
SCM	20	8	-	-	-	-	-	-
	25	10	6	4	4	10	0.5	18(10)
	32	12	7.2	4.8	4.8	12	0.5	18(10)
	40	16	9.6	6.4	6.4	16	1	20(9)
	50	20	12	8	8	20	1	23(10)
	63	20	12	8	8	20	1	23(10)
	80	25	15	10	10	25	1	31
	100	30	18	12	12	30	1	31

MEMO

■ Port/cushion needle position specification (-XR****)

Content: Specify the port and cushion needle positions.

How to order

SCA2 - 00 - 40 B - 100 - XR 1334

Model No.

*1

Compatible model	
Model No.	Name
SCA2	Medium bore size cylinder
SCS2	Large bore size cylinder

Model No.
Refer to How to order for each model.

Port/cushion needle position	
1	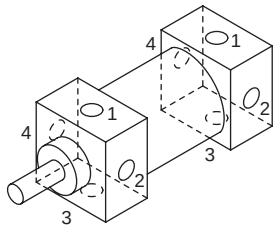
2	
3	
4	

⚠ Precautions for model No. selection

*1: The numbers indicate, in order, the port position on rod side, the needle position on rod side, the port position on head side and the needle position on head side.
Numbering is as viewed from the piston rod side.
*2: Combination in which port and needle position are on the same side is not available for SCA2.

Outline drawing

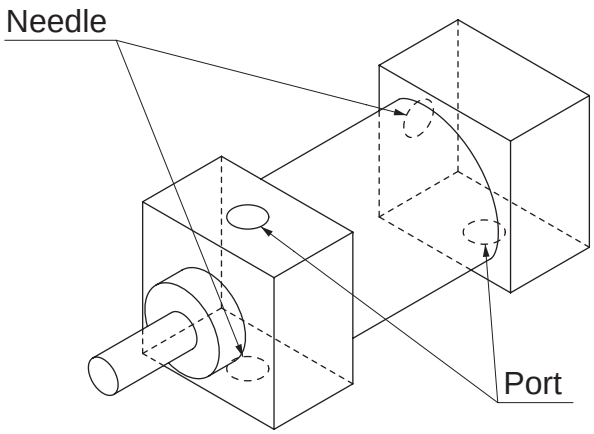

■ Downsized port (-XF)

Content: Reduce the port size to the next size down from standard. (Using bushing)

How to order

SCS2 - 00 - 125 B - 100 - XF

Model No.

Compatible model	
Model No.	Name
SCS2	Large bore size cylinder

Model No.
Refer to How to order for each model.

Dimensions

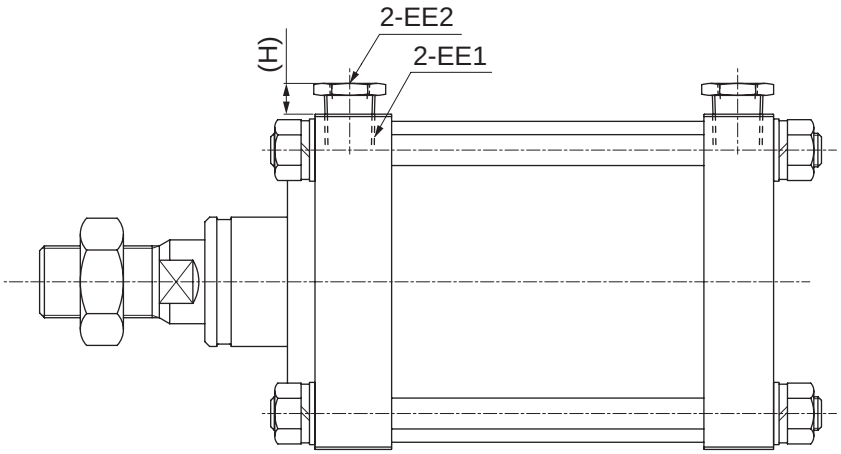

Bore size	EE1	EE2	H
ø125	Rc1/2	Rc3/8	13
ø140	Rc3/4	Rc1/2	15
ø160			
ø180			
ø200			
ø250	Rc1	Rc3/4	14

■ Rotating assembly mounting bracket (-XK*)

Content: Specify the mounting bracket mounting position.

How to order

SCA2 - 00 - 40 B - 100 - XK1

Model No.

Compatible model	
Model No.	Name
SCA2	Medium bore size cylinder
SCG	Tie rod cylinder
SCS2	Large bore size cylinder
JSC3	Brake cylinder
JSG	Tie rod cylinder with brake
JSC4	Brake cylinder

Model No.
Refer to How to order for each model.

*1

Mounting bracket installation position	
XK1	The mounting bracket is rotated 90° clockwise.
XK2	The mounting bracket is rotated 180° clockwise.
XK3	The mounting bracket is rotated 270° clockwise.

⚠ Precautions for model No. selection

*1: Only XK1 (90° rotation) is available for flange and trunnion.

Outline drawing

* The port and cushion needle positions remain the same.

● Basic

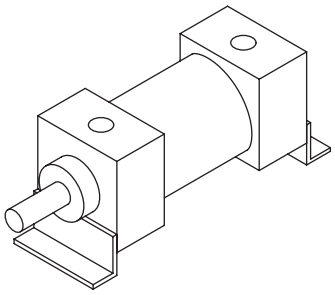

● K1

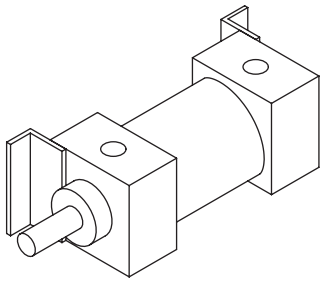

● K2

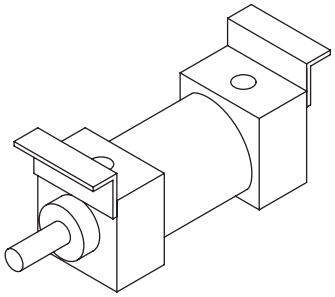

● K3

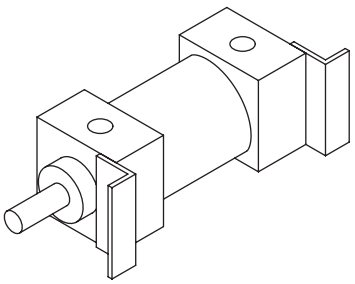

■ Specifying trunnion position (-XAQ**)

Content: Specify the length between the end face of rod cover and the center of trunnion shaft.

How to order

SCA2 - TC - 40 B - 100 - XAQ 130

Model No.

Compatible model

Model No.	Name
SCG	Tie rod cylinder
SCA2	Medium bore size cylinder
SCS2	Large bore size cylinder
CAV2	Cylinder with valve
COV*2	Cylinder with valve
JSG	Tie rod cylinder with brake
JSC3/JSC4	Brake cylinder

Model No.

Refer to How to order for each model.

Made-to-order dimensions

Refer to the dimensions list.

⚠ Precautions for model No. selection

*1: Reference point for cylinder with brake is also the rod cover.
(Note that it is not the brake end face.)
*2: As for the 2-stage and back to back, contact CKD separately.

Outline drawing

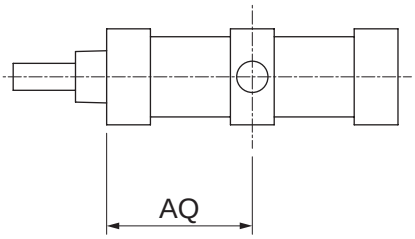

Basic

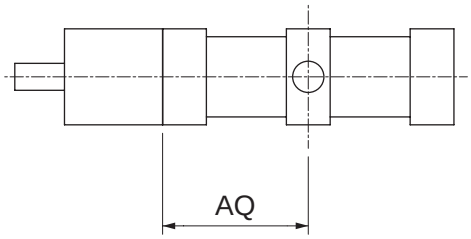

With brake

■ Rod eye pin/clevis pin split pin (-XP5)

Content: Change the snap ring of rod eye pin and clevis pin to the split pin.

How to order

SCA2 - 00 - 40 B - 100 - Y - XP5

Model No.

Compatible model	
Model No.	Name
SCM	Round shaped cylinder
SCA2	Medium bore size cylinder
SCS2	Large bore size cylinder
SSD2	Compact cylinder
SSD	Compact cylinder
JSC3/JSC4	Brake cylinder

Model No.
Refer to How to order for each model.

Outline drawing

● Snap ring

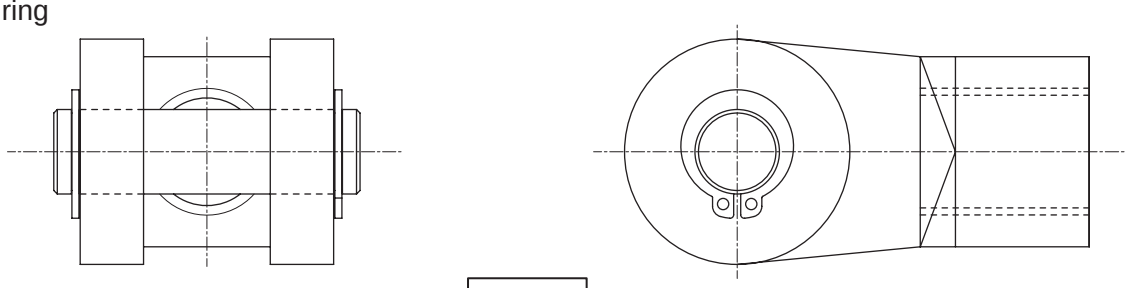

● Split pin

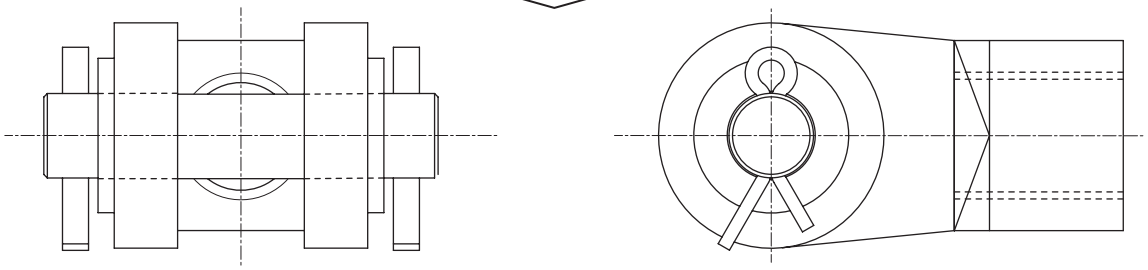

Pin diameter	Split pin size
12	ø4x20
14	ø4x20
20	ø4x25
25	ø4x30
28	ø5x35
32	ø5x40
40	ø5x50
50	ø5x60

■ Fixing rod eye with pin (-XP7)

Description: A spring pin is driven into the rod eye to prevent loosening.

How to order

SCA2 - TC - 40 B - 100 - Y - XP7

Model No.

- For XP7-S005: SCG and JSG

Compatible model	
Model No.	Name
	Round shaped cylinder
	Tie rod cylinder
	Medium bore size cylinder
	Medium bore size cylinder
	Compact cylinder
	Compact cylinder
	Brake cylinder
	Tie rod cylinder with brake

Model No.
Refer to How to order for each model.

Outline drawing

The dimensions are the same as those of the type with rod eye.
(Spring pin drive-in direction differs depending on the model.)

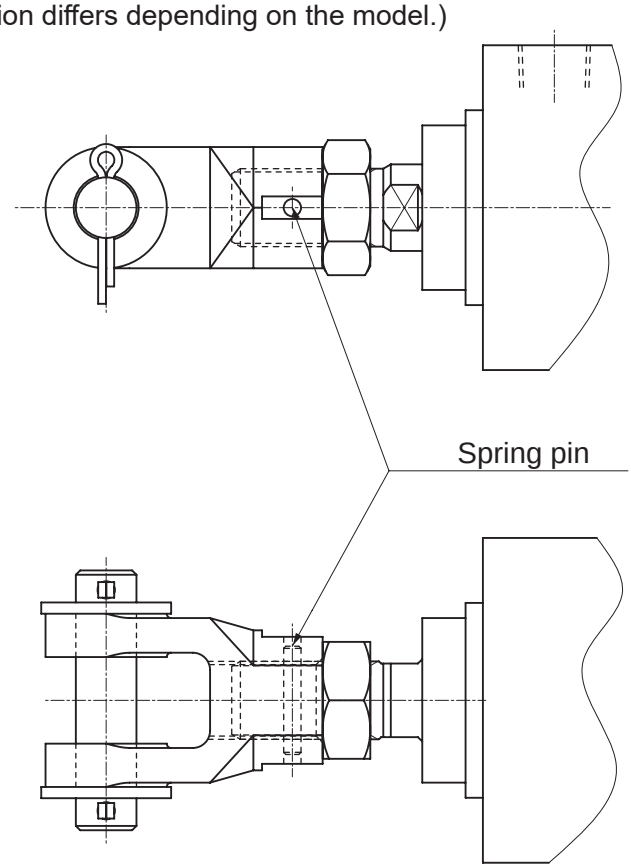

■ Rod eye pin/clevis pin split pin specifications, fixing rod eye with pin (-XP8)

Content: Change the snap ring of rod eye pin and clevis pin to the split pin. + A spring pin is driven into the rod eye pin to prevent loosening. (XP5 + XP7)

How to order

SCA2 - 00 - 40 B - 100 - Y - XP8

Model No.

Compatible model	
Model No.	Name
SCM	Round shaped cylinder
SCA2	Medium bore size cylinder
SCS2	Large bore size cylinder
SSD2	Compact cylinder
SSD	Compact cylinder
JSC3/JSC4	Brake cylinder

Model No.
Refer to How to order for each model.

Outline drawing

The installation dimensions are the same as those of the type with rod eye.

■ Tie rod extension (-XMX*)

Content: Specify the dimensions of projecting section of tie rod thread part.

How to order

SCS2 - LB - 125 B - 100 - XMX 55 *

Model No.

Compatible model	
Model No.	Name
SCS2	Large bore size cylinder

Model No.
Refer to How to order for each model.

Made-to-order dimensions
Refer to the dimensions list.

* Selection of rod side or head side	
Blank	Eight tie rods are extended on rod side and head side
R	Four tie rods are extended on rod side
H	Four tie rods are extended on head side

Outline drawing

● Eight tie rods are extended on rod side and head side (XMX*)

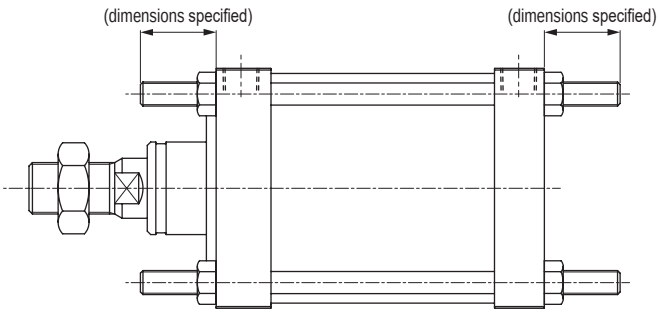

● Four tie rods are extended on rod side (XMX*R)

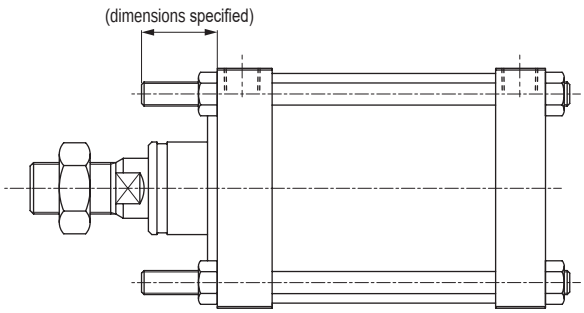

● Four tie rods are extended on head side (XMX*H)

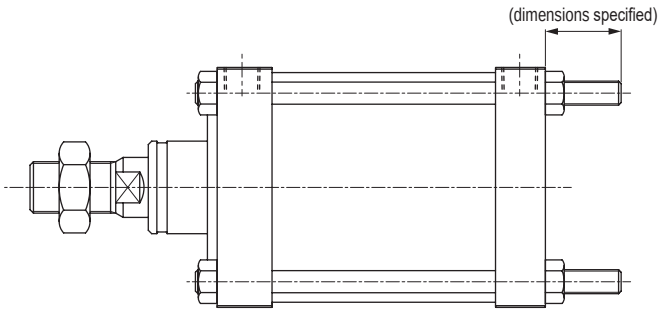

Made-to-order product

■ Tie rod material SUS (-XM1)

Content: Change the tie rod material to stainless steel. (The washer and nut are not changed.)

How to order

SCA2 - 00 - 40 B - 100 - XM1

Model No.

Compatible model	
Model No.	Name
SCA2	Medium bore size cylinder
SCS2	Large bore size cylinder

Model No.
Refer to How to order for each model.

Dimensions

Same as the standard.

■ Without bellows (-XJ9)

Content: Piston rod dimensions the same as those with bellows, without assembling bellows.

How to order

SCA2 - 00 - 40 B - 100 - XJ9

Model No.

Compatible model	
Model No.	Name
CMK2	Medium bore size cylinder
CMA2	Medium bore size cylinder
SCM	Round shaped cylinder
SCG	Tie rod cylinder
SCA2	Medium bore size cylinder
SCS2	Large bore size cylinder
ULK	Brake cylinder
JSK2	Brake cylinder
JSM2	Brake cylinder
JSG	Tie rod cylinder with brake
JSC3/JSC4	Brake cylinder

Model No.
Refer to How to order for each model.

Dimensions

The dimensions are the same as those with bellows but bellows are not attached.

■ Fluoro rubber for scraper/rod packing (-XT9)

Content: Only the rod side packing (rod packing and scraper) is changed to FKM.

How to order

SCA2 - 00 - 40 B - 100 - XT9

Model No.

Compatible model	
Model No.	Name
SCA2	Medium bore size cylinder
SCS2	Large bore size cylinder

Model No.
Refer to How to order for each model.

Dimensions

Same as the standard.

Other custom order products

Packing fluoro (-T2)

Content: Change the rod packing, piston packing and O-rings to FKM. (The cushion packing is not changed.)

How to order

SCA2 - T2 - 00 - 40 B - 100

Model No.

Compatible model	
Model No.	Name
CMK2	Medium bore size cylinder
CMA2	Medium bore size cylinder
SCM	Round shaped cylinder
SCG	Tie rod cylinder
SCA2	Medium bore size cylinder
SCS2	Large bore size cylinder
SSD2	Compact cylinder
SSD	Compact cylinder

Model No.
Refer to How to order for each model.

Outline drawing

Same as the standard.

With 2 rod nuts (-A2)

Content: 2 rod nuts (same as the standard) are included at shipment.

How to order

SCA2 - 00 - 40 B - 100 - A2

SSD - 50 - 50 - NA2

Model No.

Compatible model

* Be sure to insert "N" code if the standard piston rod end form such as SSD and FCD are female threads.

Compatible model	
Model No.	Name
CMK2	Medium bore size cylinder
CMA2	Medium bore size cylinder
SCM	Round shaped cylinder
SCG	Tie rod cylinder
SCA2	Medium bore size cylinder
SCS2	Large bore size cylinder
SSD2	Compact cylinder
SSD	Compact cylinder
FCD	Flat compact cylinder
ULK	Brake cylinder
JSK2	Brake cylinder
JSM2	Brake cylinder
JSG	Tie rod cylinder with brake
JSC3/JSC4	Brake cylinder
USSD	Position locking compact cylinder

Model No.
Refer to How to order for each model.

Outline drawing

The dimensions are the same as those of the standard except that 2 rod nuts are included.

■ Symmetric port position (-O)

Content: Position the port opposite to the standard port position.

How to order

STG - M - 50 - 50 - P6 O

* Insert the code without a hyphen immediately after the option code.

Model No.

Compatible model	
Model No.	Name
STG	Guided cylinder
STS/L	Guided cylinder

Model No.
Refer to How to order for each model.

Outline drawing

The port position is on the opposite side, as below.

● STG

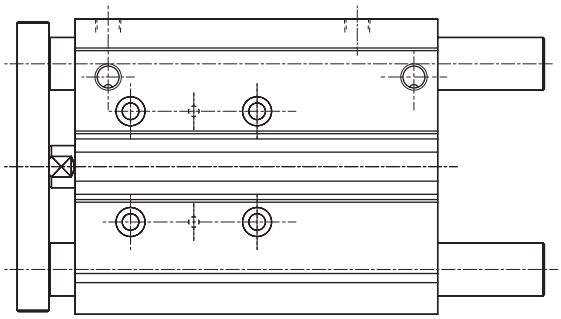

↑ The port of the standard is on this side.

● STS/L

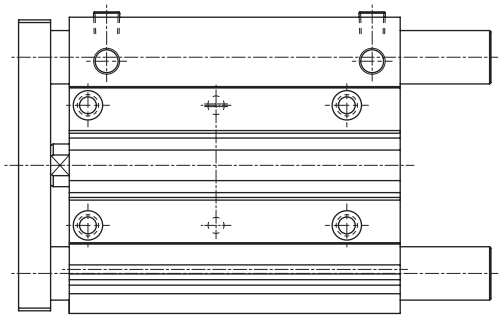

↑ The port of the standard is on this side.

■ Double solenoid (-D)

How to order

CKV2 - D - LB - 20 - 100

Model No.

Compatible model	
Model No.	Name
CKV2	Small cylinder with valve

Model No.
Refer to How to order for each model.

Outline drawing

The dimensions are the same as those of the standard except for the dimensions below.

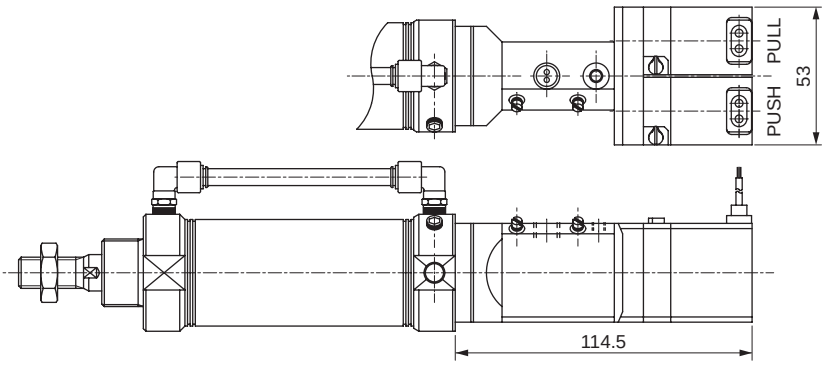

Made-to-order product

■ Low speed (-O)

Content: Low speed (working speed range 10 to 200 mm/S)

How to order

CMK2 - O - 00 - 25 - 50

Model No.

Compatible model	
Model No.	Name
CMK2	Medium bore size cylinder

Model No.
Refer to How to order for each model.

Outline drawing

Same as the standard.

■ With spigot (-R1 and R2)

Content: Spigot is deployed on the cylinder shaft center.

How to order

SSD-L - 32 - 50 - N R1

* Insert the code without a hyphen immediately after the option code.

Model No.

Compatible model	
Model No.	Name
SSD	Compact cylinder

Model No.
Refer to How to order for each model.

With spigot	
R1	With spigot on rod side
R2	With spigot on head side

Outline drawing

● With spigot on rod side (R1)

·ø12, ø16

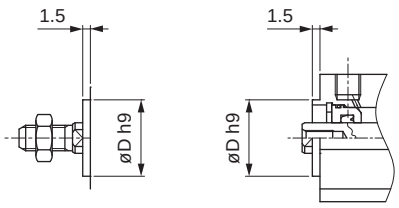

·ø20 to ø100

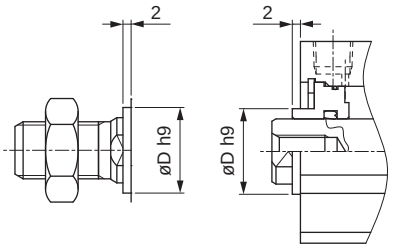

Bore size	øDh9
ø12	15
ø16	20
ø20	13
ø25	15
ø32	21
ø40	28
ø50	35
ø63	35
ø80	43
ø100	59

● With spigot on head side (R2)

·ø12, ø16

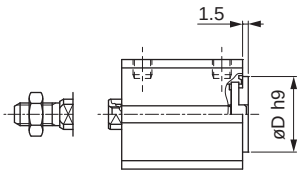

·For SSD-L-12/16-5
SSD-L1-12/16

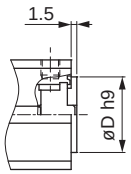

·ø20, ø25

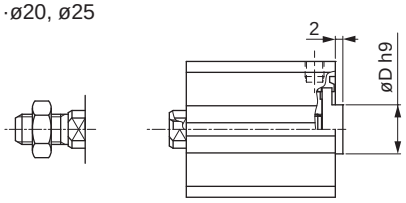

·ø32 to ø100

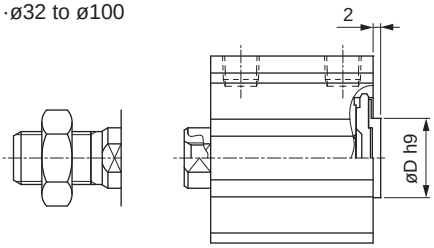

Bore size	øDh9
ø12	15
ø16	20
ø20	13
ø25	15
ø32	21
ø40	28
ø50	35
ø63	35
ø80	43
ø100	59

Introduction of customized products

		Page
Linear guide hand	LHA-**-L1	Ending 112
High gripping force hand	HHC/HHD	Ending 114
High gripping force chuck	CKT/CKU	Ending 114
Magnet suction hand	MHC2	Ending 116
Flexible support	FSB	Ending 118
Free position lock unit	FPL	Ending 120
Ultra low sliding balance cylinder	BBS	Ending 122

Long stroke has been added to LHA series!!

Long stroke

Handles common workpieces with **double** stroke.

[mm]

	CS (standard)	CS-L1
LHA-01	5	10
LHA-03	9	18
LHA-04	11	22
LHA-05	15	30
LHA-06	20	40

High rigidity

High precision

Long service life

Uses an **integrated linear guide**.

Space saving

Body is **thin**, enabling multiple arrays.

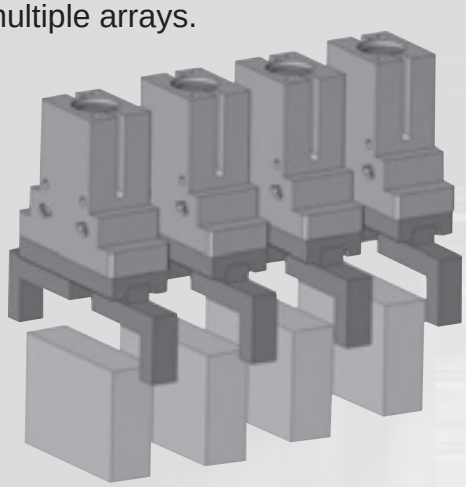

Linear guide hand LHA-**-L1 Series

How to order

LHA - 01CS - L1 - T2H - R

A — Long stroke — B — C

Ⓐ Size	Ⓑ Switch model No.						Ⓒ Switch quantity	
01CS	Axial lead wire	Radial lead wire	Contact	Lead wire	* Lead wire length		R	1 on open side
03CS							H	1 on closed side
04CS	T2H*	T2V*	Proximity	2-wire	Blank	1 m	D	2
05CS	T3H*	T3V*		3-wire	3	3 m		
06CS					5	5 m		

Note: Contact CKD for rubber cover specifications.

Specifications

Item	LHA-**-L1				
Size	01CS	03CS	04CS	05CS	06CS
Cylinder bore size mm	ø12	ø16	ø20	ø25	ø32
Actuation	Double acting (Note)				
Working fluid	Compressed air				
Max. working pressure MPa	0.7 (≈100 psi, 7 bar)				
Min. working pressure MPa	0.1 (≈15 psi, 1 bar)				
Ambient temperature °C	5 (41°F) to 60 (140°F)				
Port size	M3	M5			
Operating stroke mm	10	18	22	30	40
Rod diameter mm	ø6	ø8	ø10	ø12	ø16
Repeatability mm	±0.01				
Product weight g	94	190	370	620	970
Lubrication	Not required (use turbine oil class 1 ISO VG32 if necessary for lubrication)				

Note: Single acting: Contact CKD for normally open and normally closed specifications.

Gripping force performance data

The gripping force in the opening/closing directions with finger length L of hand with a supply pressure of 0.3, 0.5 and 0.7 MPa is shown.

- Open direction (⇦) - - - - - (shown with broken line)
- Closed direction (➡) ——— (shown with continuous line)

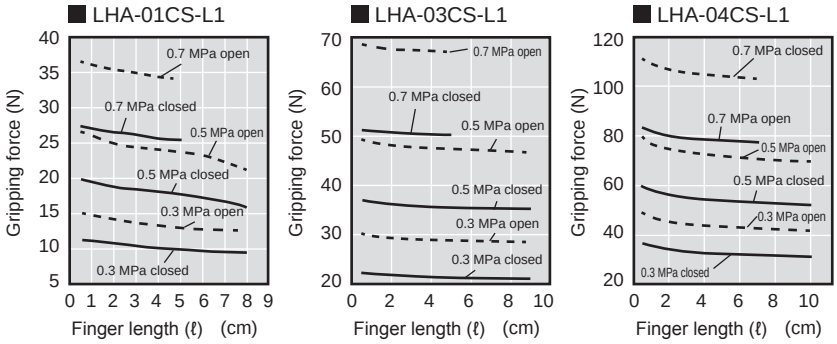

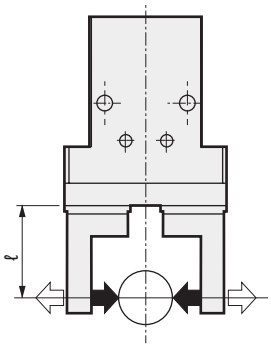

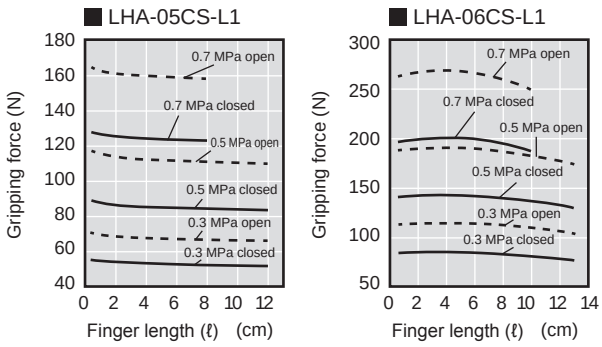

Customized product

Ending

High gripping force hand-chuck

Four new models now added!!

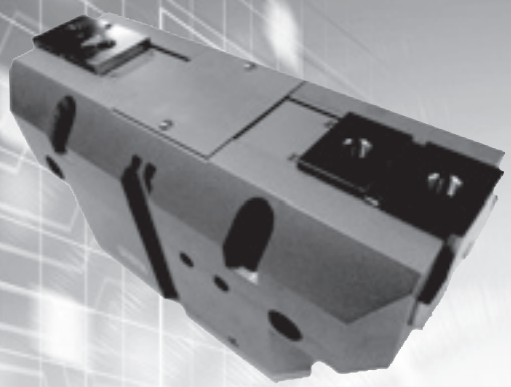

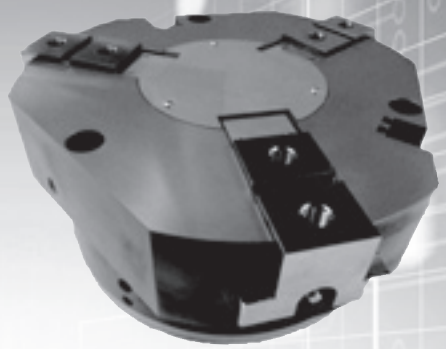

High gripping power hand

- HHC Series - Long stroke length
- HHD Series - High gripping power

Model No.	Gripping power	Stroke length
HHC-160CS	4,200N	70 mm
HHD-160CS	5,333N	40 mm

High gripping power chuck

- CKT Series - Long stroke length
- CKU Series - High gripping power

Model No.	Gripping power	Stroke length
CKT-250CS	5,500N	70 mm
CKU-250CS	8,333N	40 mm

High rigidity — Also compatible with long jaw

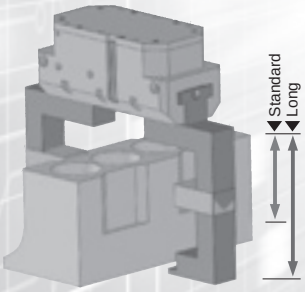

Model No.	Max. jaw length
HHC-160CS	350 mm
HHD-160CS	300 mm

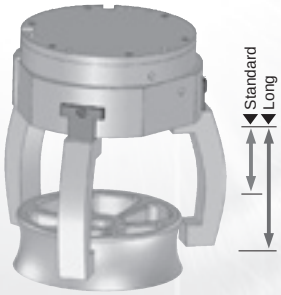

Model No.	Max. jaw length
CKT-160CS	280 mm
CKU-160CS	210 mm

Lightweight — Ultra-lightweight

Downsizing/material optimization

T type switch supported

T type switch is mountable to the switch fixing groove on the body side

- 2-wire/3-wire proximity switch
- Coolant proof switch

High gripping force hand HHC/HHD Series, high gripping force chuck CKT/CKU Series

How to order

HHC - 100CS - T2H - R

Ⓐ Ⓑ Ⓒ Ⓓ

Ⓐ Model	Ⓑ Size	Ⓒ Switch model No. (*1)						Ⓓ Switch quantity	
HHC	100CS	Axial lead wire	Radial lead wire	Contact	Lead wire	* Lead wire length		R	1 on open side
HHD	125CS							H	1 on closed side
CKT	160CS	T2H*	T2V*	Proximity	2-wire	Blank	1 m	D	2
CKU	200CS	T3H*	T3V*		3-wire	3	3 m		
	250CS					5	5 m		

*1: Coolant proof switch is also supported. Contact CKD for details.

Hand specifications

●HHC/HHD

Item	HHC-100CS	HHD-100CS	HHC-125CS	HHD-125CS	HHC-160CS	HHD-160CS
Size	100CS		125CS		160CS	
Cylinder bore size mm	ø91 or equiv.		ø125 or equiv.		ø173 or equiv.	
Actuation	Double acting					
Working fluid	Compressed air					
Max. working pressure MPa	0.7 (≈100 psi, 7 bar)					
Min. working pressure MPa	0.3 (≈44 psi, 3 bar)					
Ambient temperature °C	5 (41°F) to 60 (140°F)					
Port size	Rc1/8				Rc1/4	
Operating stroke mm	50	28	60	34	70	40
Rod diameter mm	ø30		ø36		ø40	
Theoretical grip (0.5 MPa) N	1400	2200	2100	3150	4200	5333
Width mm	234	224	270	260	314	304
Depth mm	100		115		140	
Height mm	111		126.5		141	
Max. jaw length mm	280	240	320	280	350	300
Repeatability mm	±0.03					
Product weight kg	4.5		7.0		11.5	
Lubrication	Not required (use turbine oil class 1 ISO VG32 if necessary for lubrication)					

● Gripping force performance data

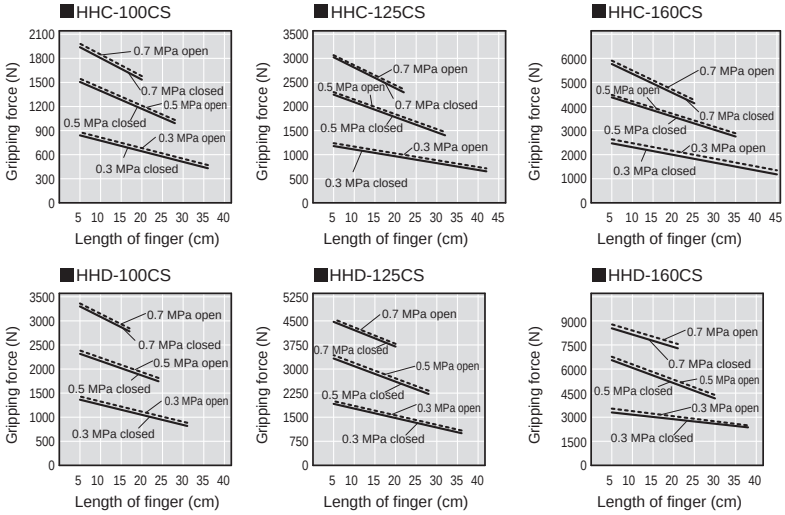

Chuck specifications

●CKT/CKU

Item	CKT-160CS	CKU-160CS	CKT-200CS	CKU-200CS	CKT-250CS	CKU-250CS
Size	160CS		200CS		250CS	
Cylinder bore size mm	ø160		ø200		ø250	
Actuation	Double acting					
Working fluid	Compressed air					
Max. working pressure MPa	0.7 (≈100 psi, 7 bar)					
Min. working pressure MPa	0.3 (≈44 psi, 3 bar)					
Ambient temperature °C	5 (41°F) to 60 (140°F)					
Port size	Rc1/8				Rc1/4	
Operating stroke mm	50	28	60	34	70	40
Rod diameter mm	ø30		ø36		ø40	
Theoretical grip (0.5 MPa) N	2100	3400	3600	5833	5500	8333
O.D. mm	264	250	304	290	344	336
Height mm	109		131		149	
Max. jaw length mm	280	210	270	150	250	150
Repeatability mm	±0.03					
Product weight kg	10		17		27	
Lubrication	Not required (use turbine oil class 1 ISO VG32 if necessary for lubrication)					

● Gripping force performance data

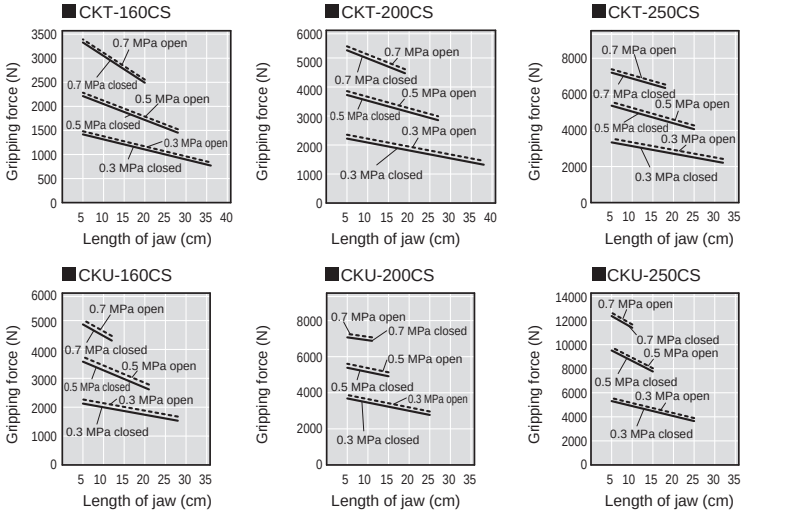

Customized product

Ending

Gripped by magnetic force.

Unlike the conventional vacuum suction method,
it is a new type of hand that adsorbs the workpiece
by magnetic force.

Variation

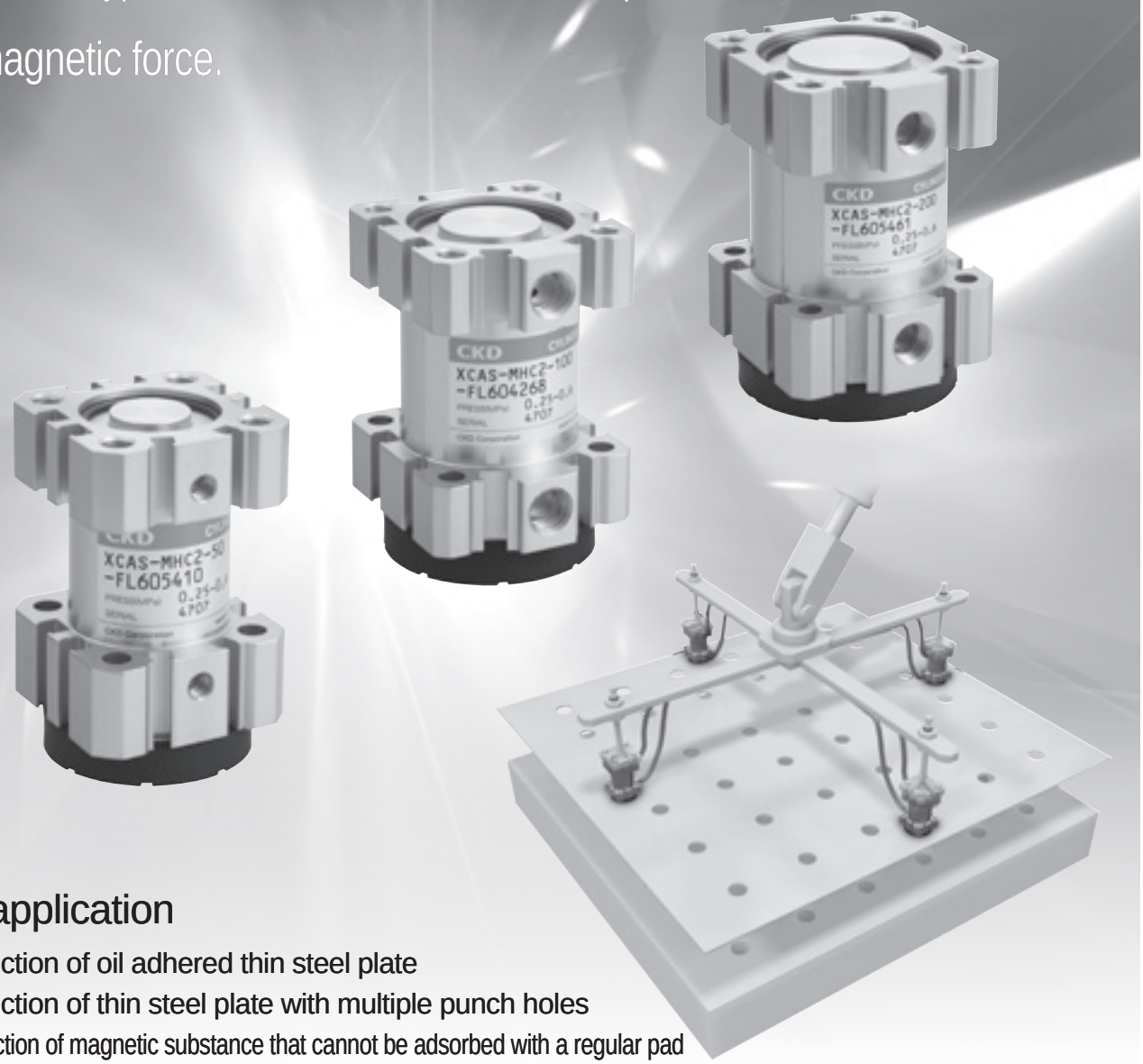

By application

- Suction of oil adhered thin steel plate
- Suction of thin steel plate with multiple punch holes
- Suction of magnetic substance that cannot be adsorbed with a regular pad

Magnet suction hand MHC2 Series

Secure suction of oil adhered steel plate or steel plate with punch holes.
Improved by significantly reducing product weight.

- Three types of suction force, 50, 100 and 200 N.
- No air consumption when held with suction, energy saving as compared to general vacuum pads.
- Equipped as standard with suction workpiece anti-slip rubber.

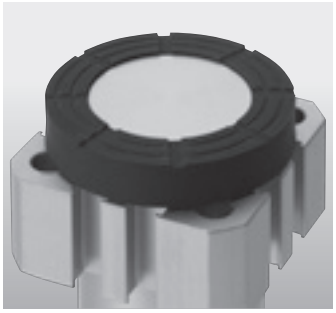

* MHC2 Series Anti-slip part

Main specifications

1 MPa ≈ 145.0 psi, 1 MPa = 10 bar, °F = 9/5°C + 32

Item	MHC2-50	MHC2-100	MHC2-200
Working fluid	Compressed air		
Actuation	Double acting		
Max. working pressure (MPa)	0.6 MPa		
Min. working pressure (MPa)	0.25 MPa		
Proof pressure (MPa)	0.9 MPa		
Ambient temperature (°C)	-5°C to 60°C (no freezing)		
Port size	M5	Rc1/8	
Suction force (N) Note 1	50	100	200
Residual suction force (N)	1 or less		
Product weight (g)	170	240	440

Note 1: The ability to hold a static vertical load. Note that the safety factor has not been taken into consideration.

Comparison of options

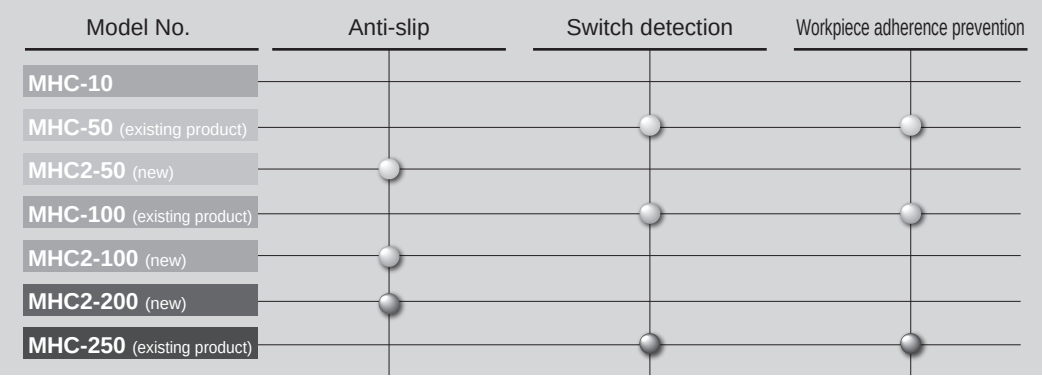

* For an overview of the MHC Series, refer to the Techno Report (CC-974).

- Take care with the working environment, as a strong magnet is built in.
- The suction force is the force that can hold a static load in the vertical direction.
  - ·Suction force may not meet specifications if the product is used in a horizontally mounted (horizontal mounting) state and at an angle.
  - ·Suction force may not be achieved when impact and vibration are applied and also when moment load is applied.
- Suction force may not be achieved depending on the thickness and size of the workpiece.
- Suction force is reduced by up to 20% if ambient temperature or workpiece temperature is 60°C or more.

Just put the workpiece there.

Flexible support FSB Series

Features

- Molds itself to the shape of any workpiece for holding.
- Changeover is easy even with different workpiece shapes.
- Also usable as a robot hand.

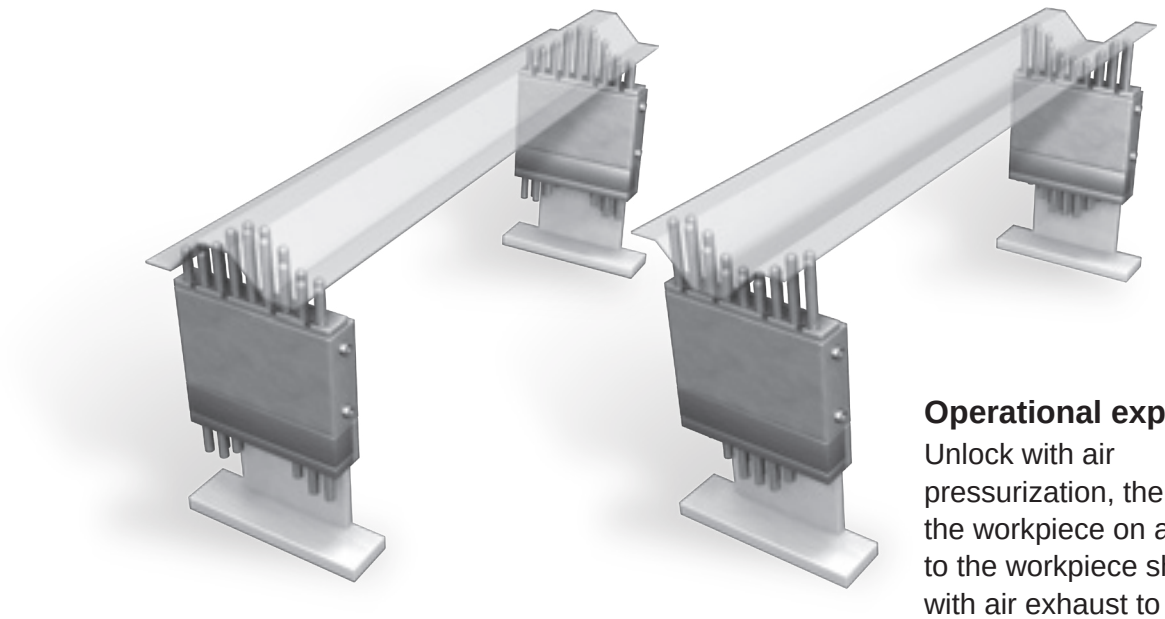

Operational explanation

Unlock with air pressurization, then press the workpiece on and mold it to the workpiece shape. Lock with air exhaust to hold the shape.

Dimensions

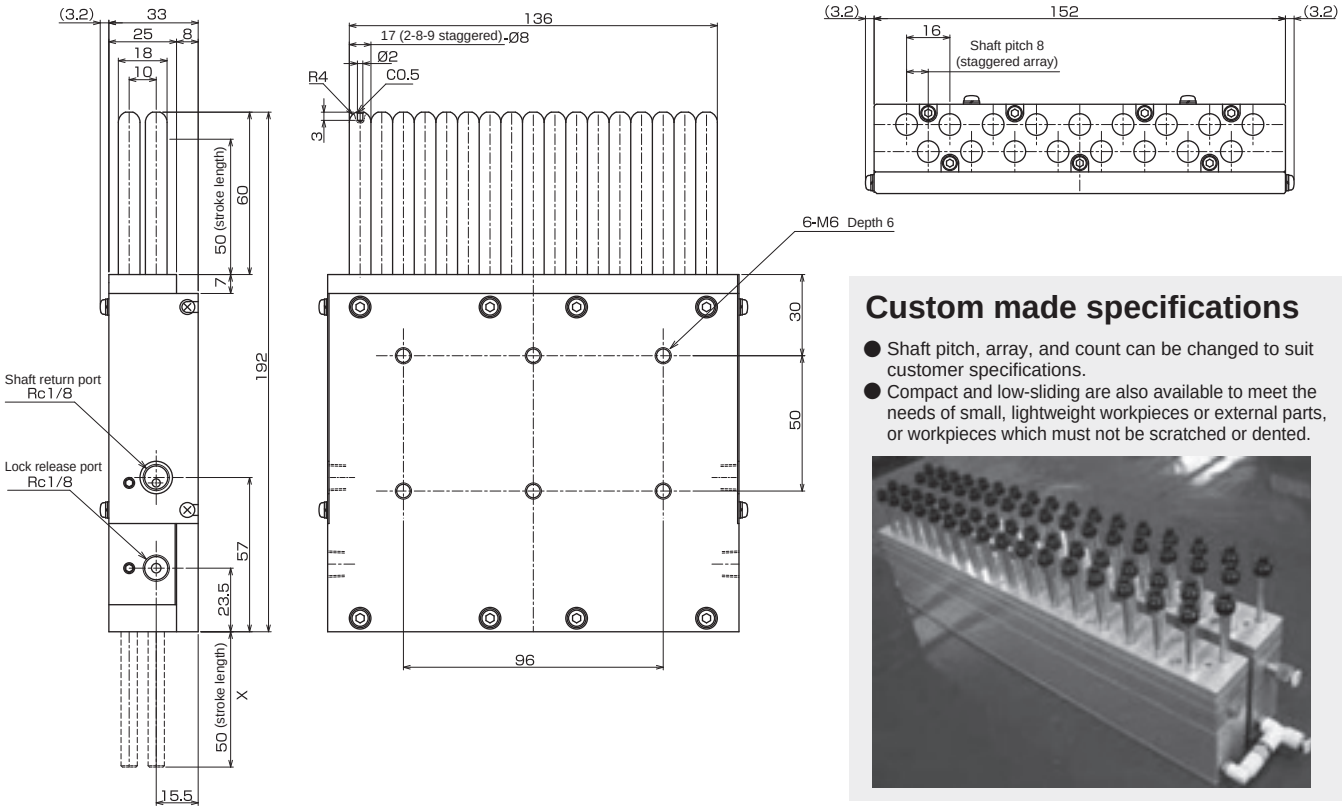

Custom made specifications

- Shaft pitch, array, and count can be changed to suit customer specifications.
- Compact and low-sliding are also available to meet the needs of small, lightweight workpieces or external parts, or workpieces which must not be scratched or dented.

Just let it take shape

Just press on the mating surface for parallel adjustment.

Proprietary locking mechanism holds the angle.

Free position lock unit FPL Series

Features

- Dedicated jig is no longer required.
- Molds to the workpiece shape and holds it. (tilt direction)
- Lock releases with air pressurization. Safety structure locks with air exhaust.
- Holds workpiece up to ±20° range.

1. Pressurize air to release lock. The molding surface slides freely.

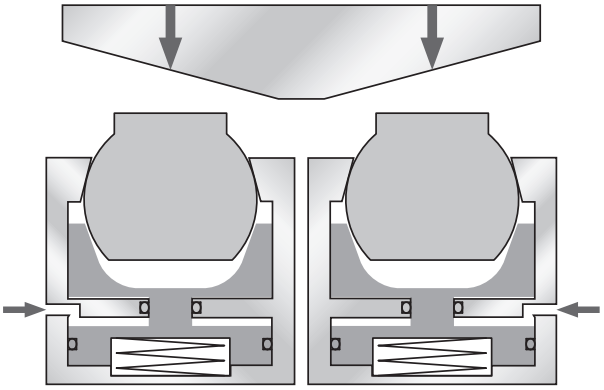

2. Press the workpiece on. The surface molds to the tilted surface.

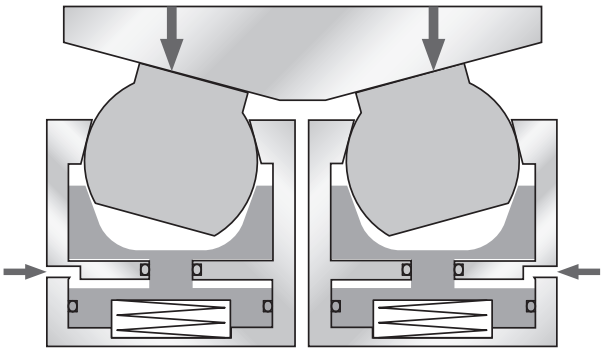

3. Exhaust air to lock. Molds to the workpiece tilt surface and holds the current position.

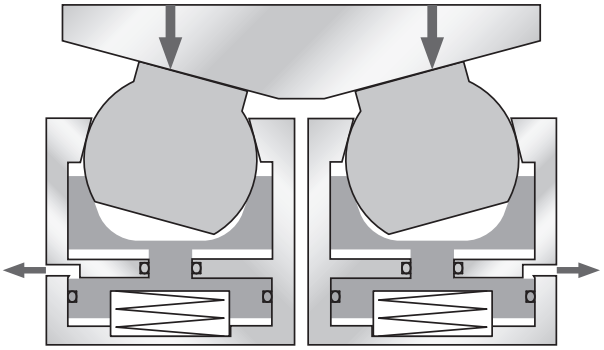

4. Because the position is held, readjustment is not required as long as it uses the same workpiece.

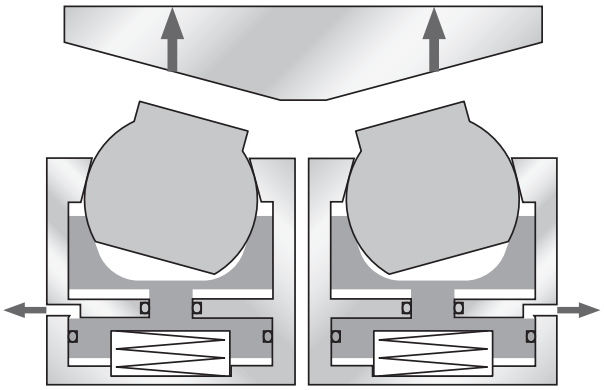

Light as a feather

Ultra low sliding balance cylinder BBS Series

Applications

● Conveyance of heavy objects

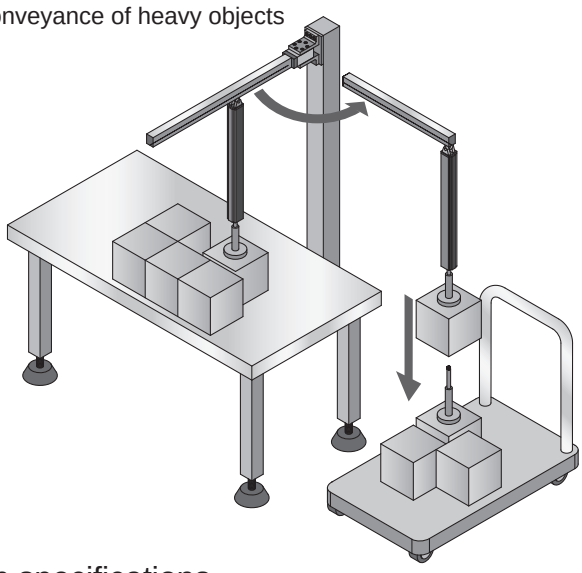

● Electric linear actuator weight assistance

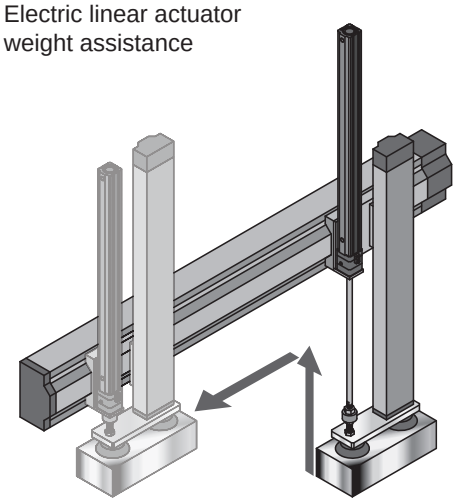

Main specifications

1 MPa ≈ 145.0 psi, 1 MPa = 10 bar, °F = 9/5°C + 32

Item		BBS-OS/BBS-OU			
		32	40	50	63
Working fluid		Clean compressed air			
Max. working pressure (MPa)		1.0 (BBS-OS), 0.6 (BBS-OU)			
Min. working pressure (MPa)	Cylinder	0.05			
	Lock	0.25 (BBS-OU only)			
Proof pressure (MPa)		1.5 (BBS-OS), 0.9 (BBS-OU)			
Ambient temperature (°C)		5°C to 60°C (no freezing)			
Bore size (mm)		ø32	ø40	ø50	ø63
Port size		Rc1/8	Rc1/4	Rc1/4	Rc3/8
Max. stroke length (mm)		500			
Working piston speed (mm/s)		1 to 1,000 (Operate within the allowable absorbed energy.)			
Cushion *1		Rubber cushion			
Lubrication		Not advisable			
Max. load (kg) *2	BBS-OS	49	76	120	190
	BBS-OU	29	46	72	114
Holding force (N) (BBS-OU only)		588	588	980	1470
No-load sliding resistance (N) *3		10 or less			

*1: Depending on the type, the allowable absorbed energy varies.
*2: Differs according to the pressurizing direction and working pressure.
*3: Indicates the load at which the piston rod operates with no load and atmospheric release.

Systems

Product guide

	Page
Components for clean room specifications	Ending 126
Fine speed cylinder	Ending 128
Low friction cylinder	Ending 128
Electric actuator	Ending 129
Small direct mounting cylinder	Ending 130
Stopper cylinder	Ending 130
Lifter cylinder	Ending 131
Fine speed fan rotary actuator	Ending 131
Oil-prohibited cylinder (SCA2-P12, JSC3-P12, SSD-K-P12)	Ending 132
Booster (B)	Ending 134
Air hydraulic booster (AHB)	Ending 134
CELLCON cylinder/CELLCON hydraulic cylinder	Ending 135

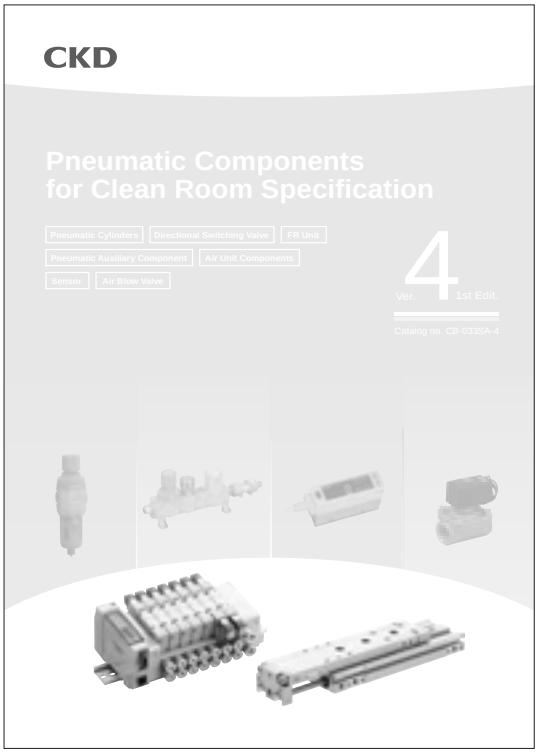

Components for clean room specifications

Catalog No.CB-033SA

Satisfies the various levels of clean room cleanliness in a wide range of industries

Reliably producing high cleanliness air

Clean blow system model circuit

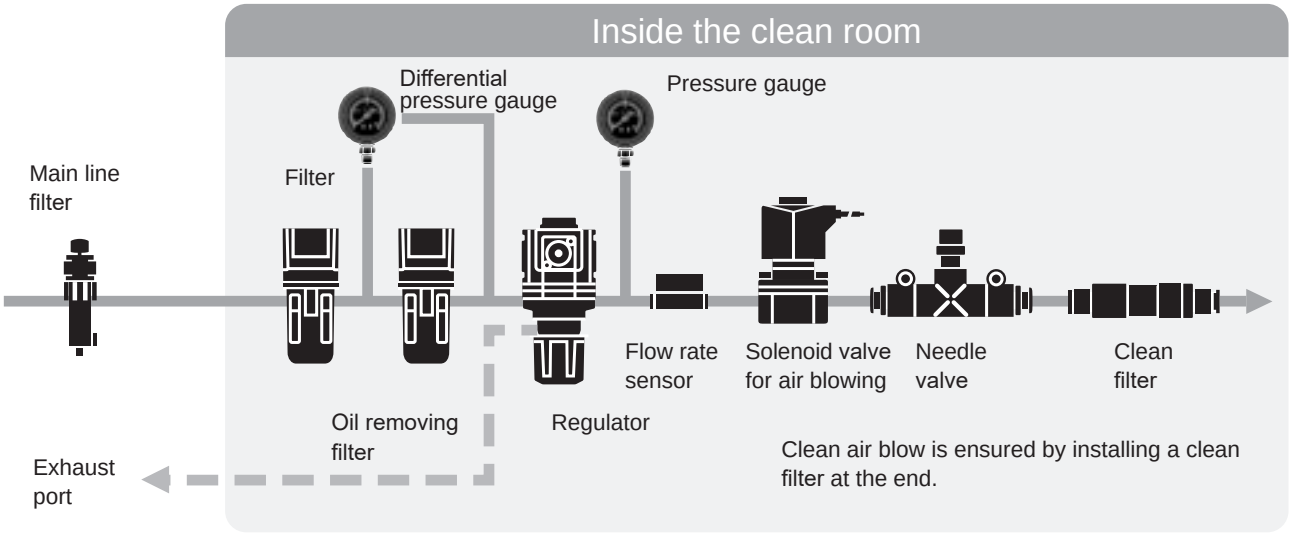

Zero particle generation with vacuum treatment and exhaust port

Air-driven actuator system circuit structure

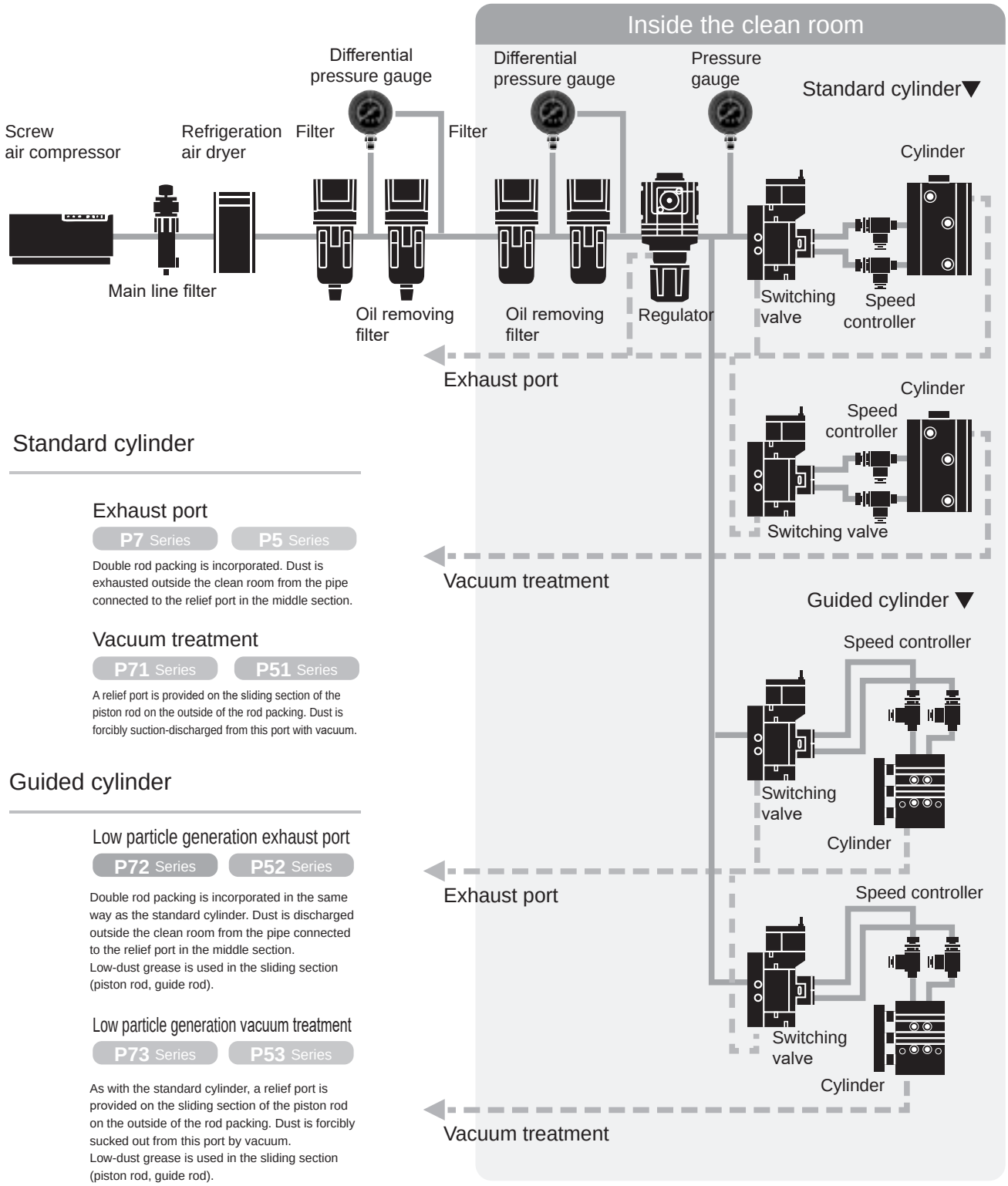

Standard cylinder

Exhaust port

P7 Series P5 Series

Double rod packing is incorporated. Dust is exhausted outside the clean room from the pipe connected to the relief port in the middle section.

Vacuum treatment

P71 Series P51 Series

A relief port is provided on the sliding section of the piston rod on the outside of the rod packing. Dust is forcibly suction-discharged from this port with vacuum.

Guided cylinder

Low particle generation exhaust port

P72 Series P52 Series

Double rod packing is incorporated in the same way as the standard cylinder. Dust is discharged outside the clean room from the pipe connected to the relief port in the middle section.
Low-dust grease is used in the sliding section (piston rod, guide rod).

Low particle generation vacuum treatment

P73 Series P53 Series

As with the standard cylinder, a relief port is provided on the sliding section of the piston rod on the outside of the rod packing. Dust is forcibly sucked out from this port by vacuum.
Low-dust grease is used in the sliding section (piston rod, guide rod).

Realizes smooth low speed operation without stick-slip

Fine speed cylinder

Catalog No.CC-1374A

- Can be driven at ultra low speeds down to 1 mm/s
- Easy startups after long shutdowns
- Stable push pressure
- Prevents unexplained stoppages
- Same dimensions as standard model No. products
- Diverse lineup from small bore sizes up

Low sliding resistance

Low friction cylinder

Catalog No. CC-620

- Follows pressure fluctuation closely
- Starts at 0.03 MPa pressure
- Stable even at 10 mm/s
- Various models and sizes are available
- Various switches are mountable

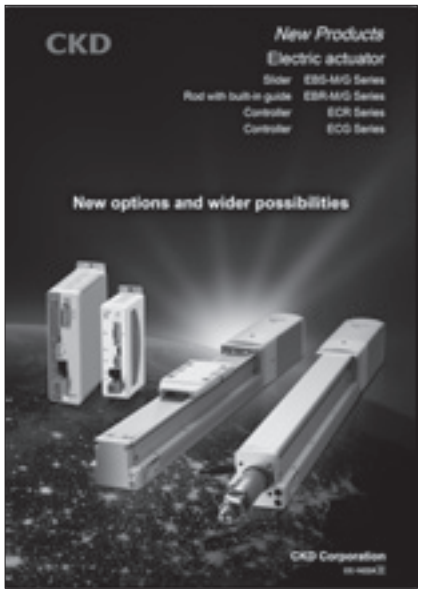

Electric actuator EBS/EBR Series
Controller ECR/ECG Series

Catalog No. CC-1422A

- Slider EBS-M Series
  For high-speed transport
- Rod with built-in guide EBR-M Series
  For press fitting and hoisting
- Controller ECR, ECG Series
  A new ONE controller system for every actuator model and size

Electric actuator FLSH/FLCR/FGRC Series
Controller ECR series

Catalog No. CC-1444A

- 2-Finger Gripper FLSH Series
  For soft handling of multi-model workpieces
- Table type FLCR Series
  For short-stroke workpiece transport and positioning
- Rotary FGRC Series
  For indexing operation and workpiece inversion
- Controller ECR Series
  "One controller" that connects to any actuator

Wide-range lineup of motorless electric actuators

Electric actuator motorless general

Catalog No. CB-055A

- Slider

For high speed transport	EBS-L Series
For high load transport	ETS/ECS Series
For long stroke transport	ETV/ECV Series
For fast tact transport	EKS-L Series

- Rod

For press fitting and hoisting	EBR-L Series

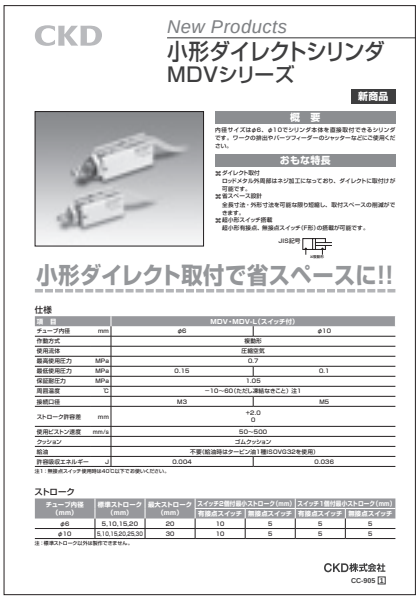

CKD

New Products

小形ダイレクトシリンダ
MDVシリーズ

新商品

概　要

内径サイズはφ6、φ10でシリンダ本体を直接取付できるシリンダです。ワークの排出やパーツフィーダーのシャッターなどにご使用ください。

おもな特長

▼ダイレクト取付
ロッドメタル外周部はネジ加工になっており、ダイレクトに取付けが可能です。
▼省スペース設計
全長寸法・外形寸法を可能な限り短縮し、取付スペースの削減ができます。
▼超小形スイッチ搭載
超小形有接点、無接点スイッチ(F形)の搭載が可能です。

JIS記号

小形ダイレクト取付で省スペースに!!

仕様

項目		MDV・MDV-L(スイッチ付)	
チューブ内径	mm	φ6	φ10
作動方式		複動形	
使用流体		圧縮空気	
最高使用圧力	MPa	0.7	
最低使用圧力	MPa	0.15	0.1
保証耐圧力	MPa	1.05	
周囲温度	℃	−10～60(ただし凍結なきこと) 注1	
接続口径		M3	M5
ストローク許容差	mm	+2.0 0	
使用ピストン速度	mm/s	50～500	
クッション		ゴムクッション	
給油		不要(給油時はタービン油1種ISOVG32を使用)	
許容吸収エネルギー	J	0.004	0.036

注1：無接点スイッチ使用時は40℃以下でお使いください。

ストローク

チューブ内径(mm)	標準ストローク(mm)	最大ストローク(mm)	スイッチ2個付動作のストローク(mm)		スイッチ1個付動作ストローク(mm)	
			有接点スイッチ	無接点スイッチ	有接点スイッチ	無接点スイッチ
φ6	5,10,15,20	20	10	5	5	5
φ10	5,10,15,20,25,30	30	10	5	5	5

注：標準ストローク以外は製作できません。

CKD株式会社
CC-905 [1]

Small direct mounting cylinder MDV Series

Catalog No. CC-905

- Rod metal rim is threaded for direct installation.
- Total length dimension and outside dimension are minimized to reduce installation space.
- Miniature switch equipped

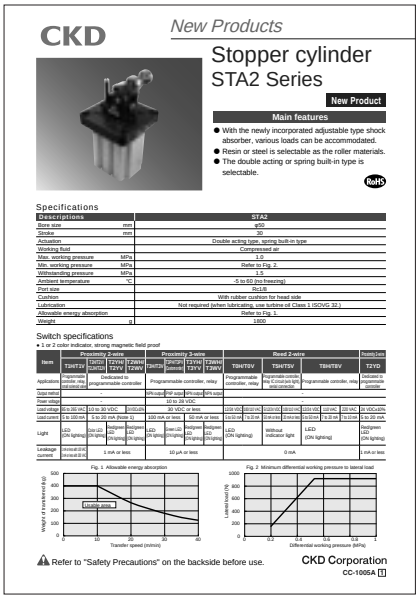

CKD

New Products

Stopper cylinder
STA2 Series

New Product

Main features

- With the newly incorporated adjustable type shock absorber, various loads can be accommodated.
- Resin or steel is selectable as the roller materials.
- The double acting or spring built-in type is selectable.

RoHS

Specifications

Descriptions		STA2
Bore size	mm	φ50
Stroke	mm	30
Actuation		Double acting type, spring built-in type
Working fluid		Compressed air
Max. working pressure	MPa	1.0
Min. working pressure	MPa	Refer to Fig. 2.
Withstanding pressure	MPa	1.5
Ambient temperature	℃	-5 to 60 (no freezing)
Port size		Rc1/8
Cushion		With rubber cushion for head side
Lubrication		Not required (when lubricating, use turbine oil Class 1 ISOVG 32.)
Allowable energy absorption		Refer to Fig. 1.
Weight	g	1800

Switch specifications

● 1 or 2 color indicator, strong magnetic field proof

Item	Proximity 2-wire				Proximity 3-wire				Reed 2-wire								Solid-state
	T5H/T5H	T5H1/T5H1	T2YH/T2YV	T2WH/T2WV	T5H3/T5H3	T2YH3/T2YV3	T2WH3/T2WV3	T5H/T5V	T5H/T5V		T5H/T5V		T5H/T5V				T2YD
Applicable	Programmable controller, relay and solenoid valve		Dedicated to programmable controller		Programmable controller, relay			Programmable controller, relay	Programmable controller, relay, Consort ion lgnt, and controller		Programmable controller, relay						Dedicated to programmable controller
Output method	-		-		NPN output	PNP output	NPN output	NPN output	-		-		-				NPN output
Power voltage	-		-		10 to 28 VDC												
Load voltage	30 to 240 VAC		10 to 30 VDC		30 VDC or less				120 VDC	200 VDC	100 VDC	200 VDC	120 VDC	120 VAC	220 VAC	240 VAC	10 VDC±20%
Load current	5 to 100 mA		5 to 20 mA (Note 1)		100 mA or less			50 mA or less	4.0-20 mA	2.5-20 mA	20-40 mA	2.5-20 mA	20-40 mA	5-20 mA	5-20 mA	5-20 mA	4 to 20 mA
Light	LED (ON lighting)	Red LED (ON lighting)	Red/green LED (ON lighting)	Red/green LED (ON lighting)	LED (ON lighting)	Green LED (ON lighting)	Red/green LED (ON lighting)	Red/green LED (ON lighting)	LED (ON lighting)		Without indicator light		LED (ON lighting)				Red/green LED (ON lighting)
Leakage current	1 mA or less				10 μA or less				0 mA								1 mA or less

Fig. 1 Allowable energy absorption

Fig. 2 Minimum differential working pressure to lateral load

⚠ Refer to "Safety Precautions" on the backside before use.

CKD Corporation
CC-1005A [1]

Stopper cylinder STA2 Series

Catalog No. CC-1005A

- Adjustable shock absorber is adopted to support various loads.
- Select either resin or steel for roller material
- Select either double acting or double acting spring integrated for actuation

Lifter cylinder
LFC-KL Series

Catalog No. CC-902

- Allowable eccentric load and allowable torque improved
- Rubber air cushion to effectively reduce the impact noise and collision acceleration at stroke end is equipped as standard
- Improved usability with a large table surface CKD direct drive actuator ABSODEX Series can be mounted.

Fine speed fan rotary actuator
Shaft SFR Series
Table SFRT Series

Catalog No. CC-984A

- Original seal structure realizes the industry's smallest air leak
- Operation is possible with various speeds ranging from low speed to high speeds
- Table (SFRT) and shaft (SFR) are available
- Compact, lightweight and high torque
- Multisurface installation for all installation places

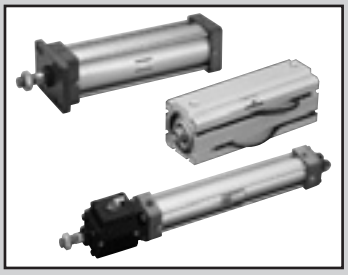

Oil-prohibited cylinder

Medium bore size cylinder SCA2-P12
Brake cylinder JSC3-P12
Compact cylinder SSD-K-P12

Eliminate grease splatter!

RoHS

Overview

Oil-prohibited cylinder is suitable for use in painted lines where oil could cause painted faults, such as uneven colors, or in environments such as food manufacturing lines where splattered grease could cause problems.

Features

● Uses medicated white Vaseline.
Non-polluting medicated white Vaseline is used.

● Uses solid lubricant bearing.
Instead of typical oil-impregnated bearings, solid lubricant bearings that do not contain oil are used.

1 MPa ≈ 145.0 psi, 1 MPa = 10 bar

● Oil-prohibited cylinder

Model No.	Actuation	Bore size mm	Standard stroke mm	Mounting	Cushion	Port size Rc	Max. working pressure MPa	Min. working pressure MPa
SCA2-P12 JSC3-P12	Double acting	40	50, 75, 100 150, 200, 250, 300, 350, 400, 450, 500	Basic 00 Axial foot LB Rod side flange FA Head side flange FB Head side special flange FC Eye bracket CA Clevis bracket CB Intermediate trunnion TC Rod side trunnion TA Head side trunnion TB	With or without air cushion can be selected	1/4	1.0 (≈150 psi, 10 bar)	SCA2:0.05 JSC3 Cylinder section: 0.1 Brake section: 0.3
		50				3/8		
		63						
		80				1/2		
		100						
SSD-K-P12	Double acting high load	40	10, 15, 20, 25, 30, 40, 50, 60, 70, 80, 90, 100	Axial foot LB Clevis bracket CB	Rubber cushion	1/8	1.0 (≈150 psi, 10 bar)	1.0 (≈150 psi, 10 bar)
		50				1/4		
		63	10, 20, 30, 40, 50, 60, 70, 80, 90, 100					0.05 (≈7.3 psi, 0.5 bar)
		80				3/8		
		100						

[How to order]

* For details on model numbers, refer to SCA2 Series: page 450 (Pneumatic Cylinders I), JSC3 Series: page 774 (Pneumatic Cylinders II), and SSD-K Series: page 1116 (Pneumatic Cylinders I).

[Medium bore size cylinder SCA2 Series]

No switch

SCA2 - LB - 40 B - 200 ——— J P12 I

With switch

SCA2 - LB - 40 B - 200 - T0H - R - J P12 I

Model No.
Ⓐ Mounting
Ⓑ Bore size
Ⓒ Cushion
Ⓓ Stroke
Ⓔ Switch model No.
Ⓕ Switch quantity
Ⓖ Option
Oil-prohibited specifications
Ⓗ Accessory

[Brake cylinder JSC3 Series]

No switch

JSC3 - LB - 40 B - 200 ——— J P12 I

With switch

JSC3 - LB - 40 B - 200 - T0H - R - J P12 I

Model No.
Ⓐ Mounting
Ⓑ Bore size
Ⓒ Cushion
Ⓓ Stroke
Ⓔ Switch model No.
Ⓕ Switch quantity
Ⓖ Option
Oil-prohibited specifications
Ⓗ Accessory

[Compact cylinder high load SSD-K Series]

No switch

SSD-K - 40 - 50 ——— N P12

With switch

SSD-KL - 40 - 50 - T0H - R - N P12

Model No.
Ⓐ Bore size
Ⓑ Stroke
Ⓒ Switch model No.
Ⓓ Switch quantity
Ⓔ Option
Oil-prohibited specifications

1 MPa ≈ 145.0 psi, 1 MPa = 10 bar

● Booster (high hydraulic pressures can be achieved by pneumatic pressure alone)

Model No.	Bore size mm	Pneumatic tube port size Rc	Boosting ratio	Generated pressure when 0.5 MPa	Oil discharging capacity cc	Hydraulic piping port size Rc	Cushion
B- 80-11	100	1/2	11.0	55	80	1/4	None
B-120-25	160		25.8	128	120		
B-160-25	160		25.8	128	160		

● B Series

RoHS

1 MPa ≈ 145.0 psi, 1 MPa = 10 bar

● Air hydraulic booster

Model No.	Bore size mm	Max. working pressure MPa	Min. working pressure MPa	Boosting ratio	Generated hydraulic pressure (0.5 MPa) MPa	Rapid feed discharge cm^3 (min to max)	High pressure discharge cm^3 (min to max)
AHB	50	1.0 (≈150 psi, 10 bar)	0.2 (≈29 psi, 2 bar)	1:13	65	90 to 360	7 to 28
				1:25	125	94 to 366	3.5 to 14
	100			1:4	20	294 to 1,176	95 to 380
				1:16	80	370 to 1,480	22 to 88
				1:30	150		11 to 44
	160			1:4	20	750 to 3,000	240 to 960
				1:16	80	940 to 3,760	60 to 240
				1:28	140	950 to 3,800	33 to 132

RoHS

Overview

The air hydraulic booster is a power device that uses a booster containing hydraulic fluid to convert the air pressure drive source to several times or several ten times larger hydraulics. Its two-step discharge capability is especially useful, enabling rapid feed discharge of large oil volume at low pressure and high pressure discharge of low oil volume at high pressure. Stamping, caulking, pressing and similar work requiring high hydraulic pressure can be automated with a pneumatic source at low cost.

Features

- Convert pneumatic pressure to high hydraulics
  High hydraulic pressures can be achieved by pneumatic pressure alone.
- Continuous pressure adjustment
  Hydraulic pressure can be adjusted continuously by adjusting pneumatic pressure.
- Constant oil temperature
  Oil temperature does not rise and stable actuation is ensured.
- Switching between rapid feed and high pressure feed
  Two-step discharge switching between rapid feed and high pressure feed can easily be performed with the air switching valve.
- Low air consumption
  Air consumption for a specific output is 1/8 of that of conventional types.

● CELLCON cylinder/CELLCON hydraulic cylinder

Model No.	Actuation	Bore size mm	Standard stroke mm	Max. stroke mm	Mounting		Port size Rc Cylinder	Port size Rc Brake section	Max. working pressure MPa Cylinder	Max. working pressure MPa Brake section	Min. working pressure MPa Cylinder	Min. working pressure MPa Brake section
JCC2 JCC2-H	Double acting	20	20.50	700	Basic	00	1/8	M5x0.8	0.7 (≈100 psi, 7 bar)	0.6 (≈87 psi, 6 bar)	0.15 (≈22 psi, 1.5 bar)	0.35 (≈51 psi, 3.5 bar)
		30	75		Axial foot	LB		1/8				
		40	100		Rod side flange	FA						
			150		Eye bracket	CA						
			200		Head side flange	TB						
JCC3 JCC3-H	Double acting	40	50	600	Basic	00	1/4	1/8	1.0 (≈150 psi, 10 bar)	0.7 (≈100 psi, 7 bar)	0.05 (≈7.3 psi, 0.5 bar)	0.3 (≈44 psi, 3 bar)
		50	75		Axial foot	LB	3/8					
		63	100		Rod side flange	FA		1/4				
		80	150	700	Head side flange	FB	1/2					
		100	200	800	Eye bracket	CA		3/8				
		125	300		Clevis bracket	CB		1/2		1.0 (≈150 psi, 10 bar)	0.1 (≈15 psi, 1 bar)	
		140	400		Intermediate trunnion	TC	3/4					
		160	500		Rod side flange	TA						
		180		900	Head side flange	TB						
PCU2	Double acting	40	50	600	Basic	00	1/4		0.2 (≈29 psi, 2 bar)		1.0 (≈150 psi, 10 bar)	
		50	75		Axial foot	LB	3/8					
		63	100		Rod side flange	FA						
		80	150	700	Head side flange	FB	1/2					
		100	200	800	Eye bracket	CA						
			300		Clevis bracket	CB						
			400		Intermediate trunnion	TC						
			500		Rod side flange	TA						
					Head side flange	TB						

Overview

CKD CELLCON cylinder is an actuator with a position detection sensor mounted.
For actuation, control is performed by the controller (separately sold) that receives travel distance pulse signals sent by the actuator, compares them with the programmed values, and performs various operations such as intermediate stop and change of direction.The FMS-oriented cylinder ensures high accuracy and flexible control.

Features

- Stopping position
  The integrated position detection sensor enables intermediate stop at a desired position.
- Excellent stopping accuracy
  Excellent stopping accuracy of ±1.0 mm or less at cylinder speed of 300 mm/s. (With no load).
- Enhanced safety
  The piston rod is locked when the pneumatic source or power is shut down (in case of power failure or accident) to ensure operation on the safe side.
- Powerful holding force
  Holding force is about twice as large as the cylinder thrust (0.4 MPa). (JCC3: ø40 to 180)

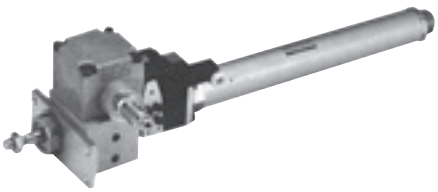
JCC2-FA-30

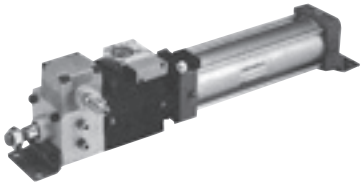
JCC3-LB-63B

PCU2-LB-63B

Ozone-proof components

	Page
Influence of ozone	Ending 138
Ozone-proof component selection range	Ending 139
Support by product group	Ending 140

Plant environments easily affected by ozone

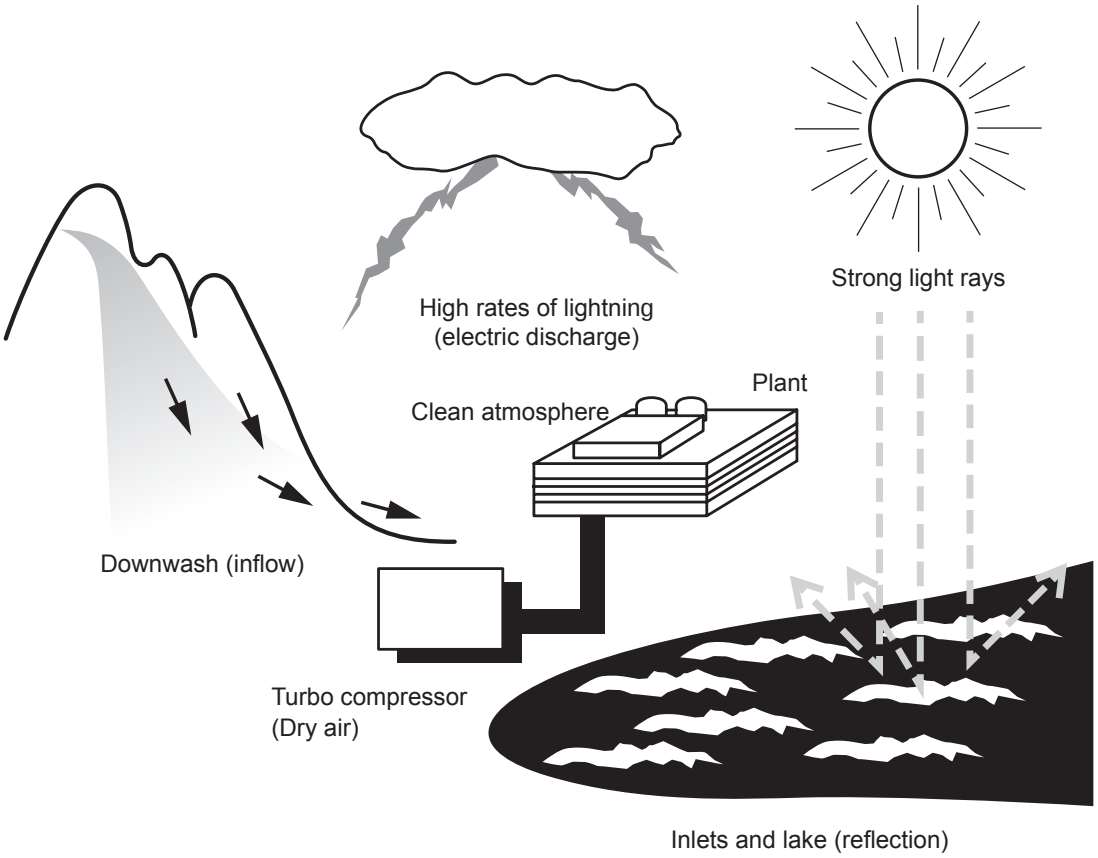

Pneumatic components affected by ozone

Diaphragm and valve seat of regulator

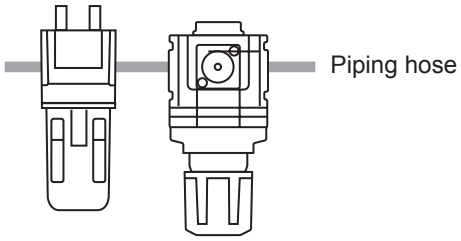

Repeated stress accelerates rubber deterioration

Valve seat of air blow valve

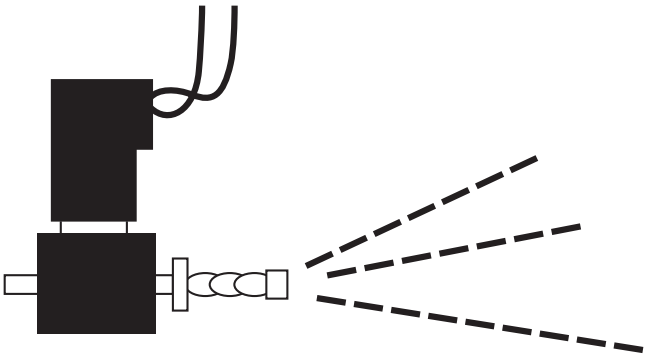

High air flow speed at orifice

Ozone-proof component selection range

A typical pneumatic component system consists of the following devices.

Devices in require ozone countermeasures.

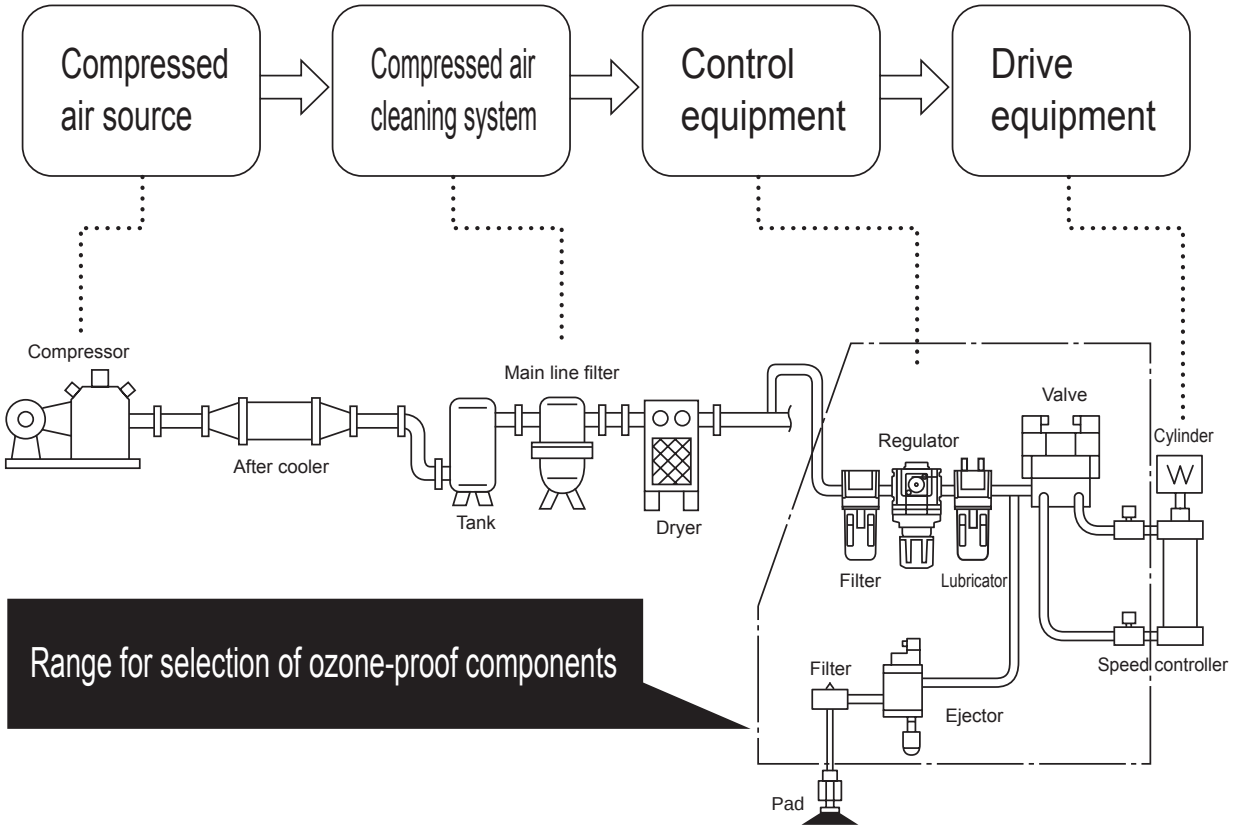

Safety precautions

Ozone-proof components use fluoro rubber or hydrogenated nitrile rubber for rubber parts.
Therefore, special working environments and conditions that differ from the standard products must be considered when evaluating performance and service life.

Support by product group

1. Pneumatic cylinders

Available as standard specifications.

2. Pneumatic valves

Pneumatic valves are available as indicated below.

- Option
  Ozone-proof specifications are available as an option.

- -P11 compatible
  Parts with ozone-proof specifications are available by adding -P11 at the end of the model No. (Custom-order product)

Ozone countermeasures

The material of the rubber parts differs from standard products.
(Dimensions are the same as for standard products.)

Option compatible model

Series		Model No.	How to order
4G Series	4, 5-port valve	$4G^{A}_{B}$* $M4G^{A}_{B}$* $MN4G^{A}_{B}$*	Selectable with option code A. Example) Single unit [Model No.] [Solenoid position] - [Port size] - [Electrical connections] [Option] A - [Rated voltage] Example) Manifold [Model No.] [Solenoid position] - [Port size] - [Electrical connections] [Option] A - [Station No.] - [Rated voltage]
	3-port valve	$3G^{A}_{B}$* $M3G^{A}_{B}$* $MN3G^{A}_{B}$*	
W4G2 Series	4, 5-port valve	W4GB2* $MW4G^{A}_{B}2$*	
	3-port valve	MW3GA2*	
MN4E0 Series	4-port valve	MN4E0*	
	3-port valve	MN3E0*	

-P11 compatible model

Series		Model No.	How to order
4S0 Series	5-port valve	$4S^{A}_{B}0$* $M4S^{A}_{B}0$*	Available by adding -P11 at the end of the model No. (Custom-order product) Example) Discrete [Model No.] [Solenoid position] - [Port size] - [Manual operating device] [Electrical connections] [Option] - [Rated voltage] -P11 Example) Manifold [Model No.] [Solenoid position] - [Port size] - [Manual operating device] [Electrical connections] [Option] - [Station No.] - [Rated voltage] - P11
MN4S0 Series	4-port valve	MN4S0* MT4S0*	
	3-port valve	MN3S0* MT3S0*	
4K Series	4, 5-port valve	$4K^{A}_{B}$* $M4K^{A}_{B}$* MN4KB*	
	3-port valve	3KA* M3KA*	
3M Series	3-port valve	$3M^{A}_{B}0$* $M3M^{A}_{B}0$*	
3P Series	3-port valve	$3P^{A}_{B}$* $M3P^{A}_{B}$*	

3. Refining and pressure adjusting components (F.R.L.)

Refer to the “How to order” of each model (Ending Pages 142 to 149).

4. Pneumatic auxiliary components

Pneumatic auxiliary components are available as follows:

- Option
  Ozone-proof specifications are available as an option.

- -P11 compatible
  Parts with ozone-proof specifications are available by adding -P11 at the end of the model No. (Custom-order product)

Ozone countermeasures

The material of the rubber parts differs from standard products.
(Dimensions are the same as the standard products.)

Option compatible model

Series	Model No.	How to order
Speed controller **Medium bore size**	SC1	Selectable with option code “X1”. SC1-[Piping port size]-X1

-P11 compatible model

Series	Model No.	How to order
Speed controller **Direct piping/elbow**	SC3R	SC3R - [Piping port size] - [Option] P11
Speed controller **Elbow with push-in fitting**	SC3W	SC3W - [Piping size] - [Compatible tube O.D.] - [Option] P11
Miniature fitting	F	F[Shape] [Flow path shape] [Compatible tube] - [Piping size] - P11
Fitting	GW	GW [Shape] [Compatible tube] - [Piping size] - [Other combination] - P11
Fitting stainless steel	ZW	ZW-[Shape] [Compatible tube O.D.]-[Piping size]-P11

* The following models are available as standard.
  Silencer SLM/SLW Series, stainless steel fitting ZJ Series, tube F.U.KX

5. Sensors

* The following models are available as standard.
  · Mechanical pressure switch (reed small pressure switch) P*100-W Series
  · Pressure switch P4000-W Series

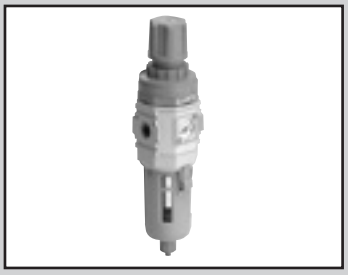

Filter regulator Standard White Series: Ozone-proof

W1000-W/W3000-W W4000-W/W8000-W-P11 Series

Fluoro rubber and hydrogenated nitrile rubber, etc., used for rubber part materials.

● Port size: Rc1/8 to Rc1

JIS symbol

RoHS CAD

How to order

W1000 - 6 ( ) - W - Z P11 - ( ) - A6W G49P

- Ⓐ Model No.
- Ⓑ Port size
- Ⓒ Port thread
- Ⓓ Option *2 *3 *4 *5 *6
- Ⓔ Indicator
- Ⓕ Pipe adaptor set (included) *7 *8
- Ⓖ Other attachments

Ozone-proof specifications

Code		Description	Ⓐ Model No. W1000	W3000	W4000	W8000
Ⓑ Port size						
6		1/8	●			
8		1/4	●	●	●	
10		3/8		●	●	
15		1/2			●	
20		3/4				●
25		1				●
Ⓒ Port thread		*9				
Blank		Rc thread	●	●	●	●
N		NPT thread	●	●	●	●
G		G thread	●	●	●	●
Ⓓ Option						
Drain discharge	Blank	Manual drain cock	●	●	●	●
	F	Auto-drain manual override (NO)		●	●	●
	F1	Auto-drain manual override (NC)		●	●	●
	FF	Large auto-drain with manual override (NO)				●
	FF1	Large auto-drain with manual override (NC)				●
Bowl material	Blank	Polycarbonate bowl	●	●	●	●
	Z	Nylon bowl	●	●	●	●
	M	Metal bowl		●	●	●
Element	Blank	5 μm	●	●	●	●
	Y	0.3 μm (submicron)		●	●	●
Pressure range	Blank	0.05 to 0.85 MPa	●	●	●	●
	L	0.05 to 0.35 MPa	●	●	●	●
Pressure relief	Blank	With relief mechanism	●	●	●	●
	N	Non-relief	●	●	●	●
Pressure gauge	Blank	With standard pressure gauge (G401)	●	●	●	●
	T	No pressure gauge (gauge port (1/4) is assembled sealed)	●	●	●	●
	T8	Pressure gauge ready option (gauge port (1/4) is left open)	●	●	●	●
X1		IN/OUT reverse flow (right to left)	●	●	●	●
Ⓔ Indicator unit						
Blank		MPa display, Rc thread	●	●	●	●
J1		MPa display, NPT, G thread	●	●	●	●
Ⓕ Pipe adaptor set (included)		*10				
Blank		No included products	●	●	●	●
A6*W		1/8 pipe adaptor set	●			
A8*W		1/4 pipe adaptor set	●	●	●	
A10*W		3/8 pipe adaptor set	●	●	●	
A15*W		1/2 pipe adaptor set		●	●	
A20*W		3/4 pipe adaptor set			●	●
A25*W		1 pipe adaptor set				●
A32*W		1 1/4 pipe adaptor set				●
*** Adaptor thread**						
Blank		Rc thread	●	●	●	●
N		NPT thread	●	●	●	●
G		G thread	●	●	●	●
Ⓖ Other attachments		*11				
Blank		No included products	●	●	●	●
BW		C-bracket	●	●	●	●
B3W		L-bracket	●	●	●	
G49P		Pressure gauge: G49D-8-P10 (L: G49D-8-P04)	●	●	●	●
G59P		Pressure gauge: G59D-8-P10 (L: G59D-8-P04)	●	●	●	●
G40P		Pressure gauge: G40D-8-P10 (L: G40D-8-P04)	●	●	●	●

⚠ Precautions for model No. selection

*1: Refer to "Pneumatic, Vacuum and Auxiliary Components (catalog No. CB-024SA)" for specifications and attachments.

*2: Select options for the drainage, bowl material, element and regulator.
When selecting options for several items, list options in order from the top.

*3: If "L" is selected for pressure range option, a low-pressure gauge (0 to 0.4 MPa) is used.*4: In the case of option code "F", the min. working pressure of the auto-drain is 0.1 MPa.
Air is purged with initial drain until pressure reaches 0.1 MPa.

*5: In the case of option code "F1", the min. working pressure of the auto-drain is 0.15 MPa.

*6: For "T", a gauge plug is assembled instead of a pressure gauge.

*7: Pipe adaptor set A*00-**-W is included.

*8: The pipe adaptor set and C-bracket cannot be used together.

Dimensions

Same as standard products. Refer to "Pneumatic, Vacuum and Auxiliary Components (catalog No. CB-024SA)".

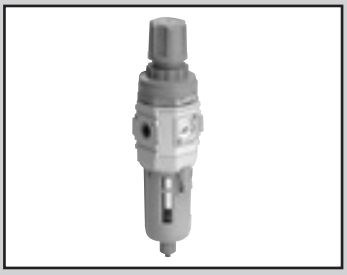

Reverse filter and regulator Standard White Series: Ozone-proof

W1100-W/W3100-W W4100-W/W8100-W-P11 Series

Fluoro rubber and hydrogenated nitrile rubber, etc., used for rubber part materials.

● Port size: Rc1/8 to Rc1

JIS symbol

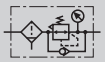

RoHS CAD

How to order

W1000 - 6 ( ) - W - Z P11 - ( ) - A6W G49P

- Ⓐ Model No.
- Ⓑ Port size
- Ⓒ Port thread
- Ⓓ Option *2 *3 *4 *5 *6 *7
  - * Refer to "Pneumatic, Vacuum and Auxiliary Components (catalog No. CB-024SA)" for the explanation of the option.
- Ⓔ Indicator
- Ⓕ Pipe adaptor set (included) *8 *9
- Ⓖ Other attachments

Ozone-proof specifications

Code	Description	Ⓐ Model No. W1100	W3100	W4100	W8100
Ⓑ Port size					
6	1/8	●			
8	1/4	●	●	●	
10	3/8		●	●	
15	1/2			●	
20	3/4				●
25	1				●
Ⓒ Port thread	*10				
Blank	Rc thread	●	●	●	●
N	NPT thread	●	●	●	●
G	G thread	●	●	●	●
Ⓓ Option					
Drain discharge: Blank	Manual drain cock	●	●	●	●
Drain discharge: F	Auto-drain manual override (NO)		●	●	●
Drain discharge: F1	Auto-drain manual override (NC)		●	●	●
Drain discharge: FF	Large auto-drain with manual override (NO)				●
Drain discharge: FF1	Large auto-drain with manual override (NC)				●
Bowl material: Blank	Polycarbonate bowl	●	●	●	●
Bowl material: Z	Nylon bowl	●	●	●	●
Bowl material: M	Metal bowl		●	●	●
Element: Blank	5 μm	●	●	●	●
Element: Y	0.3 μm (submicron)		●	●	●
Pressure Range: Blank	0.05 to 0.85 MPa	●	●	●	●
Pressure Range: L	0.05 to 0.35 MPa	●	●	●	●
Pressure relief: Blank	With relief mechanism	●	●	●	●
Pressure relief: N	Non-relief	●	●	●	●
Pressure gauge: Blank	With standard pressure gauge (G401)	●	●	●	●
Pressure gauge: T	No pressure gauge (gauge port (1/4) is assembled sealed)	●	●	●	●
Pressure gauge: T8	Pressure gauge ready option (gauge port (1/4) is left open)	●	●	●	●
X1	IN/OUT reverse flow (right to left)	●	●	●	●
Ⓔ Indicator unit					
Blank	MPa display, Rc thread	●	●	●	●
J1	MPa display, NPT, G thread	●	●	●	●
Ⓕ Pipe adaptor set (included)	*11				
Blank	No included products	●	●	●	●
A6*W	1/8 pipe adaptor set	●			
A8*W	1/4 pipe adaptor set	●	●	●	
A10*W	3/8 pipe adaptor set	●	●	●	
A15*W	1/2 pipe adaptor set		●	●	
A20*W	3/4 pipe adaptor set			●	●
A25*W	1 pipe adaptor set				●
A32*W	1 1/4 pipe adaptor set				●
*** Adaptor thread**					
Blank	Rc thread	●	●	●	●
N	NPT thread	●	●	●	●
G	G thread	●	●	●	●
Ⓖ Other attachments	*12				
Blank	No included products	●	●	●	●
BW	C-bracket	●	●	●	●
B3W	L-bracket	●	●	●	
G49P	Pressure gauge: G49D-8-P10 (L: G49D-8-P04)	●	●	●	●
G59P	Pressure gauge: G59D-8-P10 (L: G59D-8-P04)	●	●	●	●
G40P	Pressure gauge: G40D-8-P10 (L: G40D-8-P04)	●	●	●	●

⚠ Precautions for model No. selection

*1: Refer to "Pneumatic, Vacuum and Auxiliary Components (catalog No. CB-024SA)" for specifications and attachments.

*2: Select options for the drainage, bowl material, element and regulator.
When selecting options for several items, list options in order from the top.

*3: If "L" is selected for pressure range option, a low-pressure gauge (0 to 0.4 MPa) is used.

***4:** **Positions of check valve and pressure gauge cannot be changed.**
If the IN and OUT directions must be reversed, indicate "X1" at the end of the option field.

*5: In the case of option code "F", the min. working pressure of the auto-drain is 0.1 MPa.
Air is purged with initial drain until pressure reaches 0.1 MPa.

*6: In the case of option code "F1", the min. working pressure of the auto-drain is 0.15 MPa.

*7: For "T", a gauge plug is assembled instead of a pressure gauge.

*8: Pipe adaptor set A*00-**-W is included.

*9: The pipe adaptor set and C-bracket cannot be used together.

*10: G threads and NPT threads are available for IN, OUT, gauge port and drain outlet (metal bowl with auto-drain).

*11: The adaptor port size can be selected from Rc, NPT or G.
Blank: Rc thread, N: NPT thread, G: G thread.
(Example) A8G

*12: If NPT is selected for Ⓒ Port thread, an NPT pressure gauge is supplied. If Rc or G thread is selected, an R thread pressure

Dimensions

Same as standard products. Refer to "Pneumatic, Vacuum and Auxiliary Components (catalog No. CB-024SA)".

Regulator Standard White Series: Ozone-proof

R1000-W/R2000-W/R3000-W R4000-W/R6000-W/R8000-W-P11 Series

Fluoro rubber and hydrogenated nitrile rubber, etc., used for rubber part materials.

● Port size: Rc1/8 to Rc1

JIS symbol

RoHS CAD

How to order

R1000 - 6 ( ) - W - L P11 - ( ) - A6W BW

- Ⓐ Model No.
- Ⓑ Port size
- Ⓒ Port thread
- Ⓓ Option *2 *3 *4
  - * Refer to "Pneumatic, Vacuum and Auxiliary Components (catalog No. CB-024SA)" for the explanation of the option.
- Ⓔ Indicator
- Ⓕ Pipe adaptor set (included) *5 *6
- Ⓖ Other attachments
- Ozone-proof specifications

	Code	Description	Ⓐ Model No. R1000	R2000	R3000	R4000	R6000	R8000
Ⓑ Port size								
	6	1/8	●					
	8	1/4	●	●	●	●		
	10	3/8		●	●	●		
	15	1/2				●		
	20	3/4					●	●
	25	1					●	●
Ⓒ Port thread		*7						
	Blank	Rc thread	●	●	●	●	●	●
	N	NPT thread	●	●	●	●	●	●
	G	G thread	●	●	●	●	●	●
Ⓓ Option								
Pressure range	Blank	0.05 to 0.85 MPa	●	●	●	●	●	●
	L	0.05 to 0.35 MPa	●	●	●	●	●	●
Pressure relief	Blank	With relief mechanism	●	●	●	●	●	●
	N	Non-relief	●	●	●	●	●	●
Pressure gauge	Blank	With standard pressure gauge (G401)	●	●	●	●	●	●
	T	No pressure gauge (gauge port (1/4) is assembled sealed)	●	●	●	●	●	●
	T8	Pressure gauge ready option (gauge port (1/4) is left open)	●	●	●	●	●	●
	X1	IN/OUT reverse flow (right to left)	●	●	●	●	●	●
Ⓔ Indicator unit								
	Blank	MPa display, Rc thread	●	●	●	●	●	●
	J1	MPa display, NPT, G thread	●	●	●	●	●	●
Ⓕ Pipe adaptor set (included)		*7						
	Blank	No included products	●	●	●	●	●	●
	A6*W	1/8 pipe adaptor set	●					
	A8*W	1/4 pipe adaptor set	●	●	●	●		
	A10*W	3/8 pipe adaptor set	●	●	●	●		
	A15*W	1/2 pipe adaptor set		●	●	●		
	A20*W	3/4 pipe adaptor set				●	●	●
	A25*W	1 pipe adaptor set					●	●
	A32*W	1 1/4 pipe adaptor set					●	●
*** Adaptor thread**								
	Blank	Rc thread	●	●	●	●	●	●
	N	NPT thread	●	●	●	●	●	●
	G	G thread	●	●	●	●	●	●
Ⓖ Other attachments		*8						
	Blank	No included products	●	●	●	●	●	●
	BW	C-bracket	●	●	●	●	●	●
	B3W	L-bracket	●	●	●	●	●	
	B4W	B-bracket		●				
	G49P	Pressure gauge: G49D-8-P10 (L: G49D-8-P04)	●	●	●	●	●	●
	G59P	Pressure gauge: G59D-8-P10 (L: G59D-8-P04)	●	●	●	●	●	●
	G40P	Pressure gauge: G40D-8-P10 (L: G40D-8-P04)	●	●	●	●	●	●

⚠ Precautions for model No. selection

*1: Refer to "Pneumatic, Vacuum and Auxiliary Components (catalog No. CB-024SA)" for specifications and attachments.
*2: When selecting options for several items, list options in order from the top.
*3: If "L" is selected for pressure range option, a low-pressure gauge (0 to 0.4 MPa) is used.*4: For "T", a gauge plug is assembled instead of a pressure gauge.
Working temperature is 5 to 50°C.
*5: Pipe adaptor set A*00-**-W is included.
*6: The pipe adaptor set and C-bracket cannot be used together.
*7: G and NPT threads are available for IN, OUT and gauge ports.
*8: The adaptor port size can be selected from Rc, NPT or G. Blank: Rc thread, N: NPT thread, G: G thread. (Example) A8G

Dimensions

Same as standard products. Refer to "Pneumatic, Vacuum and Auxiliary Components (catalog No. CB-024SA)".

Reverse regulator Standard White Series: Ozone-proof

R1100-W/R2100-W/R3100-W R4100-W/R6100-W/R8100-W-P11 Series

Fluoro rubber and hydrogenated nitrile rubber, etc., used for rubber part materials.

● Port size: Rc1/8 to Rc1

JIS symbol 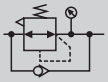

RoHS CAD

How to order

R1100 - 6 ( ) - W - L P11 - ( ) - A6W BW

- Ⓐ Model No.
- Ⓑ Port size
- Ⓒ Port thread
- Ⓓ Option *2 *3 *4
- * Refer to "Pneumatic, Vacuum and Auxiliary Components (catalog No. CB-024SA)" for the explanation of the option.
- Ⓔ Indicator
- Ⓕ Pipe adaptor set (included) *5 *6
- Ⓖ Other attachments
- Ozone-proof specifications

Code		Description	Ⓐ Model No. R1100	R2100	R3100	R4100	R6100	R8100
Ⓑ Port size								
6		1/8	●					
8		1/4	●	●	●	●		
10		3/8		●	●	●		
15		1/2				●		
20		3/4					●	●
25		1					●	●
Ⓒ Port thread		*7						
Blank		Rc thread	●	●	●	●	●	●
N		NPT thread	●	●	●	●	●	●
G		G thread	●	●	●	●	●	●
Ⓓ Option								
Pressure range	Blank	0.05 to 0.85 MPa	●	●	●	●	●	●
	L	0.05 to 0.35 MPa	●	●	●	●	●	●
Pressure relief	Blank	With relief mechanism	●	●	●	●	●	●
	N	Non-relief	●	●	●	●	●	●
Pressure gauge	Blank	With standard pressure gauge (G401)	●	●	●	●	●	●
	T	No pressure gauge (gauge port (1/4) is assembled sealed)	●	●	●	●	●	●
	T8	Pressure gauge ready option (gauge port (1/4) is left open)	●	●	●	●	●	●
X1		IN/OUT reverse flow (right to left)	●	●	●	●	●	●
Ⓔ Indicator unit								
Blank		MPa display, Rc thread	●	●	●	●	●	●
J1		MPa display, NPT, G thread	●	●	●	●	●	●
Ⓕ Pipe adaptor set (included)		*8						
Blank		No included products	●	●	●	●	●	●
A6*W		1/8 pipe adaptor set	●					
A8*W		1/4 pipe adaptor set	●	●	●	●		
A10*W		3/8 pipe adaptor set	●	●	●	●		
A15*W		1/2 pipe adaptor set		●	●	●		
A20*W		3/4 pipe adaptor set				●	●	●
A25*W		1 pipe adaptor set					●	●
A32*W		1 1/4 pipe adaptor set					●	●
*** Adaptor thread**								
Blank		Rc thread	●	●	●	●	●	●
N		NPT thread	●	●	●	●	●	●
G		G thread	●	●	●	●	●	●
Ⓖ Other attachments		*9						
Blank		No included products	●	●	●	●	●	●
BW		C-bracket			●	●		
B3W		L-bracket			●	●		
B4W		B-bracket		●				
G49P		Pressure gauge: G49D-8-P10 (L: G49D-8-P04)	●	●	●	●	●	●
G59P		Pressure gauge: G59D-8-P10 (L: G59D-8-P04)	●	●	●	●	●	●
G40P		Pressure gauge: G40D-8-P10 (L: G40D-8-P04)	●	●	●	●	●	●

⚠ Precautions for model No. selection

*1: Refer to "Pneumatic, Vacuum and Auxiliary Components (catalog No. CB-024SA)" for specifications and attachments.

*2: When selecting options for several items, list options in order from the top.

*3: If "L" is selected for pressure range option, a low-pressure gauge (0 to 0.4 MPa) is used.

*4: Positions of check valve and pressure gauge cannot be changed. If the IN and OUT directions must be reversed, indicate "X1" at the end of the option field.

For "T", a gauge plug is assembled instead of a pressure gauge.

*5: Pipe adaptor set A*00-**-W is included.

Dimensions

Same as standard products. Refer to "Pneumatic, Vacuum and Auxiliary Components (catalog No. CB-024SA)".

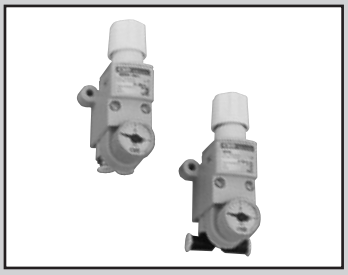

Compact regulator: Ozone-proof

RB500-P11 Series

Fluoro rubber and hydrogenated nitrile rubber, etc., used for rubber part materials.

● Port size: Push-in fitting ø4, ø6

JIS symbol

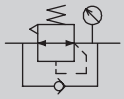

How to order

RB500 - SSC4 - P G39 P11

- RB500: Model No.
- SSC4: Ⓐ Connection
- P: Ⓑ Option
- G39: Ⓒ Pressure gauge
- P11: Ozone-proof specifications

Code			Description
Ⓐ Connection			
Direction	IN	S	Straight
		L	Elbow
	OUT	S	Straight
		L	Elbow
Bore size		C4	ø4
		C6	ø6
Ⓑ Option			
Panel Mount		Blank	Without nut
		P	With nut *3
Pressure range		Blank	0.05 to 0.7 MPa
		L	0.05 to 0.35 MPa
Pressure relief		Blank	Relief
		N	Non-relief
Ⓒ Pressure gauge			
T			No pressure gauge
Blank (Press range: Blank)			With pressure gauge (G29D-6-P10)
Blank (Pressure range: L)			With pressure gauge (G39D-6-P04)
G39			With pressure gauge (G39D-6-P10)

⚠ Precautions for model No. selection

*1: Refer to “Pneumatic, Vacuum and Auxiliary Components (catalog No. CB-024SA)” for specifications.
*2: ø21 0 to 1.0 MPa pressure gauge is standard.
For low pressure, ø27 0 to 0.4 MPa low pressure gauge is provided.
*3: Indicate option code “P” for panel mounting.

Dimensions

Same as standard products. Refer to “Pneumatic, Vacuum and Auxiliary Components (catalog No. CB-024SA)”.

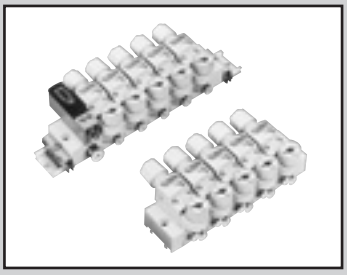

Block manifold regulator: Ozone-proof

MNRB500-P11 Series

Fluoro rubber and hydrogenated nitrile rubber, etc., used for rubber part materials.

● Port size: Push-in fitting ø4, ø6, ø8

RoHS CAD

How to order

MNRB500A - SSC64 - 5 - N G39 - D P11

- Ⓐ Model No. *1
- Ⓑ Fitting
- Ⓒ Port size
- Ⓓ Station No. *2
- Ⓔ Pressure gauge *4
- Ⓔ Option *3
- Ⓕ Mounting method
- Ozone-proof specifications

Code	Description
Ⓐ Model No.	
MNRB500A	Common supply
MNRB500B	Individual supply
Ⓑ Fitting	
IN direction	
S	Straight
L	Elbow
OUT direction	
S	Straight
L	Elbow

Ⓒ Port size IN/OUT		MNRB500A	MNRB500B
C64	IN; ø6, OUT; ø4	●	
C66	IN; ø6, OUT; ø6	●	
C84	IN; ø8, OUT; ø4	●	
C86	IN; ø8, OUT; ø6	●	
C4	IN, OUT; ø4		●
C6	IN, OUT; ø6		●

Ⓓ Station No.	*3
1	1 station
2	2 stations
⋮	⋮
10	10 stations

Ⓔ Option			MNRB500A	MNRB500B
Pressure range	**Blank**	0.05 to 0.7 MPa (pressure gauge: G29D-6-P10)	●	
	L	0.05 to 0.35 MPa (gauge: G39D-6-P04)	●	
Pressure relief	**Blank**	Relief	●	
	N	Non-relief	●	
Pressure gauge *4	**Blank**	With pressure gauge	●	
	T	Without pressure gauge (gauge port Rc 1/8)	●	
	G39	With pressure gauge (G39D-6-P10)	●	
Flow direction	**Blank**	Standard flow (left → right)	●	●
	X1	Reverse flow (right → left)	●	

Ⓕ Mounting method	
Blank	DIN rail mount
D	Direct mount

JIS symbol

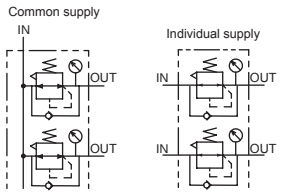

⚠ Precautions for model No. selection

*1: Refer to "Pneumatic, Vacuum and Auxiliary Components (catalog No. CB-024SA)" for specifications.
*2: The air supply block is one station.
When using three or more stations simultaneously with the common supply, increase one supply block station for every three stations.
Designate with mix manifold specifications sheet.
*3: Up to five direct mounting stations can be used.*4: Options and pressure gauges for each

Dimensions

Same as standard products. Refer to "Pneumatic, Vacuum and Auxiliary Components (catalog No. CB-024SA)".

Regulator: Ozone-proof

B2019-P11 Series

Fluoro rubber or hydrogenated nitrile rubber, etc., used for rubber part materials.

● Port size: Rc1/8, Rc1/4

JIS symbol

How to order

B2019 - 1C - NPB P11

- B2019: Model No.
- 1C: Ⓐ Port size *2
- NPB: Ⓑ Option *1 *3
- P11: Ozone-proof specifications

Code		Description
Ⓐ Port size		
1C		Rc1/8
2C		Rc1/4
Ⓑ Option		
Regulator	**Blank**	Standard
	N	Non-relief
	L	Low pressure (0.02 to 0.34 MPa)
	P	Panel mount
Included product	**Blank**	No included products
	G	Pressure gauge
	B	Bracket

⚠ Precautions for model No. selection

*1: Refer to “Pneumatic, Vacuum and Auxiliary Components (catalog No. CB-024SA)” for specifications and attachments.

*2: If port size NPT thread is selected, do not indicate nominal size C. Example) B2019-1

*3: The pressure gauge supplied is G49D-6-P10 (G49D-6-P04 for low pressure).

Dimensions

Same as standard products. Refer to “Pneumatic, Vacuum and Auxiliary Components (catalog No. CB-024SA)”.

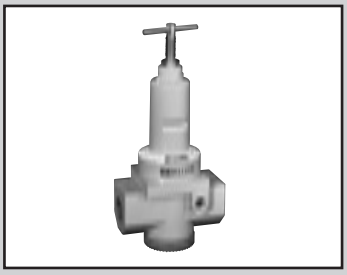

Reverse regulator (chuck valve integrated): Ozone-proof

2415-P11 Series

Fluoro rubber and hydrogenated nitrile rubber, etc., used for rubber part materials.

● Port size: Rc3/4, Rc1, Rc1 1/2

JIS symbol

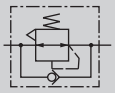

RoHS

How to order

2415 - 6C - NKG P11

- 2415: Model No.
- 6C: Ⓐ Port size *2
- NKG: Ⓑ Option *1 *3
- P11: Ozone-proof specifications

Code		Description
Ⓐ Port size		
6C		Rc3/4
8C		Rc1
10C		Rc1 1/2
Ⓑ Option		
Regulator	**Blank**	Standard
	N	Non-relief
	K	Plastic knob
Included product	**Blank**	No included products
	G	Pressure gauge

⚠ Precautions for model No. selection

*1: Refer to "Pneumatic, Vacuum and Auxiliary Components (catalog No. CB-024SA)" for specifications and attachments.
*2: If port size NPT thread is required, do not indicate nominal size C. Example) 2415-6
*3: The pressure gauge supplied is G59D-8-P10 (G59D-8-P04 for low pressure).

Dimensions

Same as standard products. Refer to "Pneumatic, Vacuum and Auxiliary Components (catalog No. CB-024SA)".

Custom-order products

Available as a custom order. Contact CKD for details.

SC-M5 speed controller: Ozone-proof

■ Rubber material is changed to fluoro rubber
■ Port size: M5

2QV/3QV Quick Valve: Ozone-proof

■ Rubber part materials changed to fluoro rubber or hydrogenated nitrile rubber, etc.
■ 2- and 3-port valves are available

DSC speed controller with adjusting dial: Ozone-proof

■ Rubber part materials changed to fluoro rubber or hydrogenated nitrile rubber, etc.
■ Port size: Rc1/8, Rc1/4, Rc3/8, Rc1/2

JIS symbols

JIS symbols used in this catalog are old symbols following JISB0125-1: 2001.
Refer to JISB0125-1: 2007 or JFPS2011: 2006 for new symbols.

	Page
1. Element of symbol	Ending 152
2. Line and port	Ending 153
3. Directional control valve	Ending 153
4. Pressure control valve	Ending 159
5. Flow rate control valve	Ending 159
6. Cylinder and motor	Ending 159
7. Power and tank	Ending 160
8. Air adjustment component	Ending 160
9. Auxiliary components and other components	Ending 161

CAD data is available.

JIS symbol list

1. Element of symbol

(a) Symbol element

Name	Symbol	Applications	Remarks
Line Continuous line		(1) Main line (2) Air supply line to pilot valve (3) Electric signal line	· Return line included · Other: Indicate the electrical code to distinguish from the pipeline.
Broken line		(1) Pilot operation line (2) Drain line (3) Filter (4) Valve switching position	· Internal pilot · External pilot
Dashed line		Surrounding line	· Surrounding line indicating unit with more than one function
Double line	$\frac{1}{5}l$	Mechanical connection	· Rotary shaft, lever, piston rod, etc.
Circle Large circle	l	Energy converter	· Pump, compressor, electric motor, etc.
Medium circle	$\frac{1}{2} \sim \frac{3}{4}l$	(1) Measuring instrument (2) Rotation fitting	
Small circle	$\frac{1}{4} \sim \frac{1}{3}l$	(1) Check valve (2) Link (3) Roller	· Roller: Put a dot in the center.
Point	$\frac{1}{8} \sim \frac{1}{5}l$	(1) Connection of pipeline (2) Roller axis	
Half circle	l	Shaft of the pump or actuator whose rotating angle is limited	
Square	l	(1) Fluid control components (2) Driving motor other than electric motor	· The port intersects vertically with the side.
	l	Fluid adjustment components	· The port intersects with the corner. · Filter, drain separator, lubricator, heat exchanger, etc.
	$\frac{1}{2}l$, $\frac{1}{2}l$	(1) Cushion in cylinder (2) Weight in accumulator	
Rectangle	m, l	(1) Cylinder (2) Valve	· $m>l$
	$\frac{1}{4}l$, l	Piston	
	m, $\frac{1}{2}l$	Specific operation	· $l \le m \le 2l$ · Refer to Item 3 (a)
Others Hollow (large)	m, $\frac{1}{2}l$	Oil tank (ventilation)	· $m>l$
Hollow (small)	$\frac{1}{4}l$, $\frac{1}{2}l$	Local display of oil tank (ventilation)	
Capsule	l, $2l$	(1) Oil tank (closed) (2) Pneumatics tank (3) Accumulator (4) Auxiliary gas vessel	

(b) Functional element

Name	Symbol	Applications	Remarks
Equilateral triangle			· Fluid energy direction · Type of fluid · Energy source display
Filled in	▶	Hydraulic pressure	
In white	▷	Compressed air and other gas pressure	· Including exhaust to atmosphere
Arrow display Straight line or diagonal line		(1) Linear movement (2) Fluid flow path and direction in valve (3) Heat flow direction	
Curve	90°	Rotary motion	· Arrow indicates the rotation direction viewed from shaft free end
Diagonal line		Variable operation or adjustment method	· Draw diagonal line with appropriate length · Pump, spring or variable solenoid actuator, etc.
Others		Electric	· Use the following symbols when AC and DC identification is required Closed path Port
		Closed path or closed port	
		Solenoid actuator	
		Temperature instruction or adjustment	
		Driving motor	
		Spring	· Refer to Item 7 · Two-thread is preferable
		Restriction	
	90°	Simplified code of valve seat of check valve	

(c) Mechanical element

Name	Symbol	Remarks
Rod		· 2-direction operation · Arrow indication is optional
Rotary shaft		· 2-direction operation · Arrow indication is optional
Detent		· 2-direction operation · Vertical line on notch indicates clamp
Latch	*	· 1-direction operation · * Code showing how to release

Name	Symbol	Remarks
Over center mechanism		· 2-direction operation

2. Line and port
(a) Pipeline

Name	Symbol	Remarks
Connection	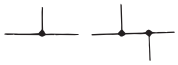	
Intersection	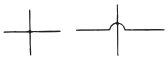	· Not connected
Flexible line		· Hose (normally connected to movable part)

(b) Port

Name	Symbol	Remarks
Air vent		· Air venting is continuously performed · Air venting is performed during a specific period and then the port is closed · Air venting is performed by controlling the check mechanism as necessary
Exhaust port	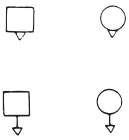	· For pneumatic pressure only · Without port · With port
Quick fitting	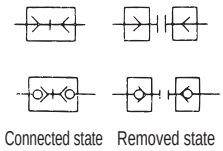	· Without check valve · With check valve (self sealant fitting)
Rotation fitting 1 line 3 line	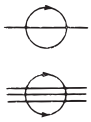	· Swivel joint and rotary joint · 1-direction rotation · 2-direction rotation

3. Directional control valve
(a) Operation

Name	No.	Symbol	Remarks
Manual control	⑩	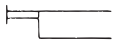	· General symbol used when the operation or the number of operating directions is not specified
Push button	⑪	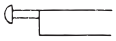	· 1-direction operation
Pull button	⑫	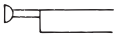	· 1-direction operation
Push/pull button	⑬		· 2-direction operation

Name	No.	Symbol	Remarks
Lever	⑭	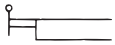	·2-direction operation (including rotary motion)
Pedal	⑮	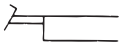	·1-direction operation (including rotary motion)
Double pedal	⑯		· 2-direction operation (including rotary motion)
Mechanical control plunger	⑳ ㉑		· 1-direction operation
Variable stroke limiter	㉒		· 2-direction operation
Spring	㉓		· 1-direction operation
Roller	㉔		· 2-direction operation
Pull roller	㉕		· Arrow shows operation direction. Indication may be omitted. · 1-direction operation
Electrical control	㉚		· Solenoid, torque motor, etc.
Linear electric actuator Single acting solenoid	㉛		· 1-direction operation · Diagonal line may also run downward left-right
Double acting solenoid	㉜	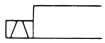	· 2-direction operation · Diagonal line may also spread upward
Single acting variable solenoid actuator	㉝	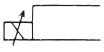	· 1-direction operation · Proportional solenoid, · Force motor, etc.
Double acting variable solenoid actuator	㉞		· 2-direction operation · Torque motor
Rotary electric actuator	㉟	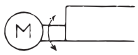	· 2-direction operation · Electric motor
Indirect electric actuator Single acting solenoid	㊱	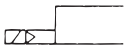	* JIS covers pilot operation, but the valve is typically used as a solenoid valve, so the transfer symbols ㊱ and ㊲ have been used for the electric operation classification.
Double acting solenoid	㊲	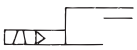	
Pilot operation Direct pilot operation	㊵	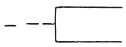	
	㊶	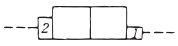	· When the pressurized area is different, indicate the values of the area ratio within the rectangle when required.
Internal pilot	㊸		· Operation flow path is provided inside the device.
External pilot	㊹		· Operation flow path is provided outside the device.

Name	No.	Symbol	Remarks
Indirect pilot operation Pressurized operation method Pneumatic pilot	㊷		· Internal pilot · No primary operation
Electromagnetic/ pneumatic pilot	㊱	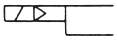	· With primary operation by single acting solenoid · Internal pilot * As this symbol generally indicates a solenoid valve, it is classified into the electrical control category and identified with a number in the ㉚s.
Electromagnetic/ pneumatic pilot with manual override	㊱ ⑩	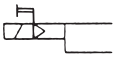	· Valve with manual override added to the above operation

(b) Directional control valve basic

No. of Ports	No. of Positions	Status of normal position	No.	Symbol	Remarks
2	2	Normally closed	Ⓐ	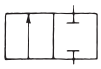	Normally closed
2	2	Normally open	Ⓑ	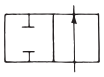	Normally open
3	2	Normally closed	Ⓒ	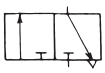	
3	2	Normally open	Ⓓ		
4	2	P/B connection	Ⓔ	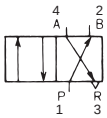 Note) Numerals are as indicated in JISB 8375 (ISO 5599).	
5	2	P/B connection	Ⓕ	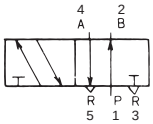	
4	3	All ports closed	Ⓖ	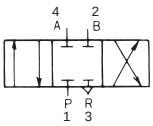	
5	3	All ports closed	Ⓗ	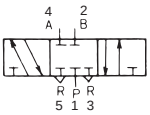	
4	3	A/B/R connection	Ⓘ	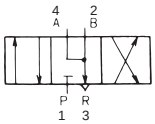	
5	3	A/B/R connection	Ⓙ	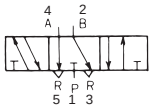	

No. of Ports	No. of Positions	Status of normal position	No.	Symbol	Remarks
4	3	P/A/B connection	Ⓚ	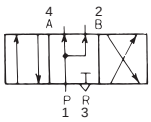	
5	3	P/A/B connection	Ⓛ	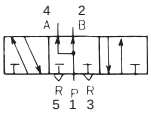 Note) Numerals are as indicated in JISB 8375 (ISO 5599).	

(c) Manual control valve

Name			Combination symbol			Symbol
Basic and operating method	No. of Ports	No. of Positions	Operation mech	Basic	Operation mech	
Direct acting normally closed push-button/ spring/return	2	2	⑪	Ⓐ	㉓	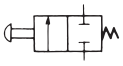
Direct acting normally open push-button/spring/ return	2	2	⑪	Ⓑ	㉓	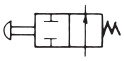
Direct acting normally closed push-button/ spring/return	3	2	⑪	Ⓒ	㉓	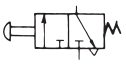
Direct acting normally open push-button/spring/ return	3	2	⑪	Ⓓ	㉓	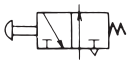
Direct acting normally closed pull button/spring/ return	2	2	⑫	Ⓐ	㉓	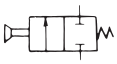
Direct acting normally open pull button/spring/ return	2	2	⑫	Ⓑ	㉓	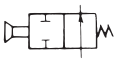
Direct acting normally closed pull button/spring/ return	3	2	⑫	Ⓒ	㉓	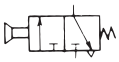
Direct acting normally open pull button/spring/ return	3	2	⑫	Ⓓ	㉓	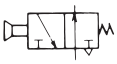
Direct acting normally closed push/pull button	2	2	⑬	Ⓐ		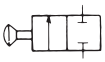
Direct acting normally open push/pull button	2	2	⑬	Ⓑ		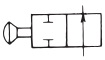
Direct acting normally closed push/pull button	3	2	⑬	Ⓒ		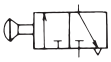
Direct acting normally open push/pull button	3	2	⑬	Ⓓ		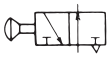

Name			Combination symbol			Symbol
Basic and operating method	No. of Ports	No. of Positions	Operation mech	Basic	Operation mech	
Direct acting normally closed lever/spring/return	2	2	⑭	Ⓐ	㉓	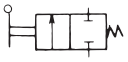
Direct acting normally open lever/spring/return	2	2	⑭	Ⓑ	㉓	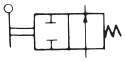
Direct acting normally closed lever/spring/return	3	2	⑭	Ⓒ	㉓	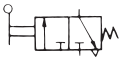
Direct acting normally open lever/spring/return	3	2	⑭	Ⓓ	㉓	
Direct acting lever with detent	2	2	⑭	Ⓐ	③	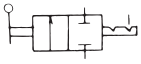
Direct acting lever with detent	3	2	⑭	Ⓒ	③	③Detent item 1 (c) ④Latch item 1 (c) Generally, key selector valve
Direct acting lever with latch	2	2	⑭	Ⓐ	④	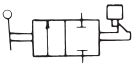
Direct acting lever with latch	3	2	⑭	Ⓒ	④	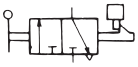
Direct acting normally closed pedal/spring/return (foot valve)	2	2	⑮	Ⓐ	㉓	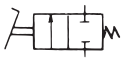
Direct acting normally open pedal/spring/return	2	2	⑮	Ⓑ	㉓	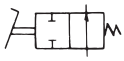
Direct acting normally closed pedal	3	2	⑮	Ⓒ	㉓	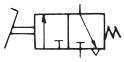
Direct acting normally open pedal	3	2	⑮	Ⓓ	㉓	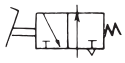
Direct acting double pedal (foot valve for both feet)	2	2	⑯	Ⓐ		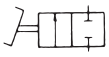
Direct acting double pedal (foot valve for both feet)	3	2	⑯	Ⓒ		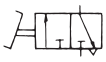
Direct acting push button spring/return	4	2	⑪	Ⓔ	㉓	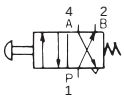
Direct acting push button spring/return	5	2	⑪	Ⓕ	㉓	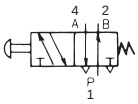

Name			Combination symbol			Symbol
Basic and operating method	No. of Ports	No. of Positions	Operation mech	Basic	Operation mech	
Direct acting both sides operation push button	4	2	⑪	Ⓔ	⑪	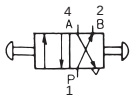
Direct acting both sides operation push button	5	2	⑪	Ⓕ	⑪	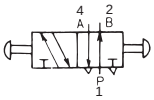
Direct acting push/pull button	4	2	⑬	Ⓔ		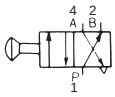
Direct acting push/pull button	5	2	⑬	Ⓕ		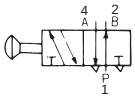
Direct acting closed center with lever/detent	4	3	⑭	Ⓖ	③	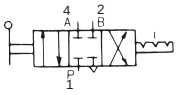
Direct acting closed center with lever/detent	5	3	⑭	Ⓗ	③	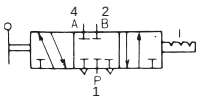
Direct acting pedal spring/return (foot valve)	4	2	⑮	Ⓔ	㉓	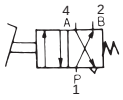
Direct acting pedal spring/return (foot valve)	5	2	⑮	Ⓕ	㉓	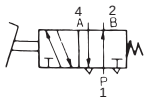
Direct acting double pedal (foot valve)	4	2	⑯	Ⓔ		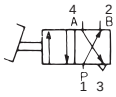
Direct acting double pedal (foot valve)	5	2	⑯	Ⓕ		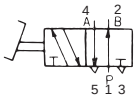
Direct acting double pedal all ports closed with detent	4	3	⑯	Ⓖ	③	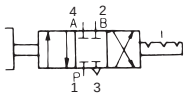
Direct acting double pedal all ports closed with detent	5	3	⑯	Ⓗ	③	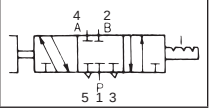

Note) Numerals are as indicated in JISB 8375 (ISO 5599).

(d) Mechanical control valve

Name			Combination symbol			Symbol
Basic and operating method	No. of Ports	No. of Positions	Operation mech	Basic	Operation mech	
Direct acting normally closed plunger spring/return	2	2	㉑	Ⓐ	㉓	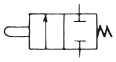
Direct acting normally open plunger spring/return	2	2	㉑	Ⓑ	㉓	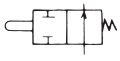

Name			Combination symbol			Symbol
Basic and operating method	No. of Ports	No. of Positions	Operation mech	Basic	Operation mech	
Direct acting normally closed plunger	3	2	㉑	Ⓒ	㉓	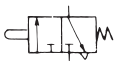
Direct acting normally open plunger	3	2	㉑	Ⓓ	㉓	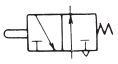
Direct acting normally closed roller spring/return	2	2	㉔	Ⓐ	㉓	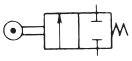
Direct acting normally open roller spring/return	2	2	㉔	Ⓑ	㉓	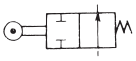
Direct acting normally closed roller spring/return	3	2	㉔	Ⓒ	㉓	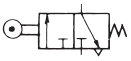
Direct acting normally open roller spring/return	3	2	㉔	Ⓓ	㉓	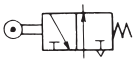
Direct acting normally closed single roller spring/return	2	2	㉕	Ⓐ	㉓	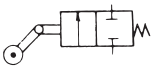
Direct acting normally open single roller spring/return	2	2	㉕	Ⓑ	㉓	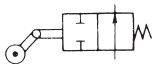
Direct acting normally closed single roller spring/return	3	2	㉕	Ⓒ	㉓	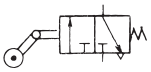
Direct acting normally open single roller spring/return	3	2	㉕	Ⓓ	㉓	

(e) Pilot operated valve

Name			Combination symbol			Symbol
Basic and operating method	No. of Ports	No. of Positions	Operation mech	Basic	Operation mech	
Direct acting pilot normally closed spring/return	2	2	㊶	Ⓐ	㉓	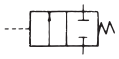
Direct acting pilot normally open spring/return	2	2	㊶	Ⓑ	㉓	
Direct acting pilot normally closed spring/return	3	2	㊶	Ⓒ	㉓	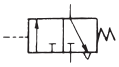
Direct acting pilot normally open pilot	3	2	㊶	Ⓓ	㉓	

Name			Combination symbol			Symbol
Basic and operating method	No. of Ports	No. of Positions	Operation mech	Basic	Operation mech	
Direct acting both sides pilot	2	2	㊶	Ⓐ	㊶	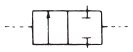
Direct acting both sides pilot	3	2	㊶	Ⓒ	㊶	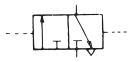
Direct acting pilot spring/return	4	2	㊶	Ⓔ	㉓	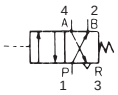
Direct acting pilot spring/return	5	2	㊶	Ⓕ	㉓	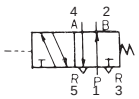
Direct acting both sides pilot	4	2	㊶	Ⓔ	㊶	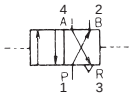
Direct acting both sides pilot	5	2	㊶	Ⓕ	㊶	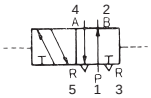
Direct acting all ports closed both sides pilot spring/center	4	3	㊶ ㉓	Ⓖ	㊶ ㉓	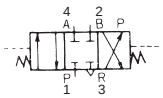
Direct acting all ports closed both sides pilot spring/center	5	3	㊶ ㉓	Ⓗ	㊶ ㉓	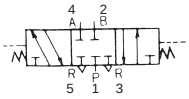
Direct acting A/B/R connection both sides pilot spring/center						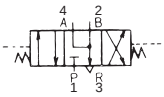
Direct acting both sides pilot A/B/R connection spring/center						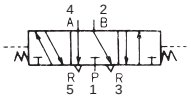
Direct acting P/A/B connection both sides pilot spring/center						* 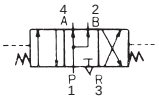
Direct acting P/A/B connection both sides pilot spring/center						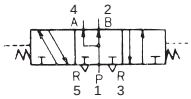
						* The basic valve's operation symbol located in the center position can be written on the diagram with a projection line from the center position of the basic valve. Example 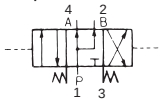
Indirect operation normally closed pilot spring/return						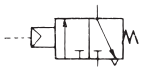

Note) Numerals are as indicated in JISB 8375 (ISO 5599).

(f) Check valve, shuttle valve, exhaust valve

Name	Combination symbol			Symbol (Detailed and simplified symbol)	No.
	Operation mech	Basic	Operation mech		
Check valve without spring	㊸	Ⓐ	㊸	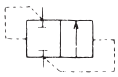 Simplified symbol	ⓐ
Check valve with spring	㊸ ㉓	Ⓐ	㊸	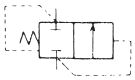 Simplified symbol	ⓐ'
Pilot operation check valve	㊶ ㊸	Ⓐ	㊸	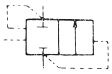 Valve is closed by external pilot Simplified symbol	ⓑ
High pressure priority shuttle valve	㊸	Ⓒ	㊸	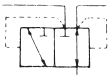 Simplified symbol 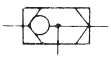	ⓒ
Low pressure priority shuttle valve				The low pressure inlet is connected to the low-pressure priority output, and the high-pressure inlet is closed. Simplified symbol 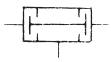	ⓓ
Quick manual valve				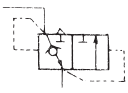 Simplified symbol 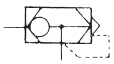	ⓔ

(g) Solenoid valve

Name	Combination symbol					Symbol
Basic and operating method	No. of Ports	No. of Positions	Operation mechanism	Basic	Operation mechanism	
Direct acting normally closed Single acting solenoid spring/return	2	2	㉛	Ⓐ	㉓	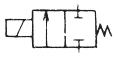
Direct acting normally open Single acting solenoid spring/return	2	2	㉛	Ⓑ	㉓	
Direct acting normally closed single acting solenoid	3	2	㉛	Ⓒ	㉓	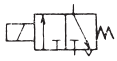
Direct acting normally open single acting solenoid	3	2	㉛	Ⓓ	㉓	
Direct acting both sides solenoid	2	2	㉛	Ⓐ	㉛	
Direct acting both sides solenoid	3	2	㉛	Ⓒ	㉛	
Direct acting double acting solenoid ㊟Use when the relationship to the electric signal need not be indicated.	3	2	㉜	Ⓒ		㊟ ㊟Position and functions of valving element are specified.
Direct acting Single acting solenoid	4	2	㉛	Ⓔ	㉓	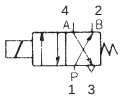
Direct acting Single acting solenoid	5	2	㉛	Ⓕ	㉓	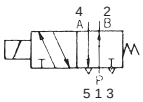
Indirect operation Single acting solenoid spring/return ㊟Pressure/return	4	2	㊱	Ⓔ	㉓ ㊸	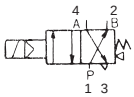
Indirect operation Single acting solenoid spring/return ㊟Pressure/return	5	2	㊱	Ⓕ	㉓	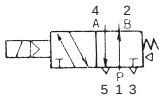 ㊟For the pressure and return operation symbols, indicate the functional element equilateral triangle at the edge.
Direct acting both sides solenoid	4	2	㉛	Ⓔ	㉛	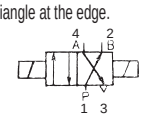

Note) Numerals are as indicated in JISB 8375 (ISO 5599).

Name			Combination symbol			Symbol
Basic and operating method	No. of Ports	No. of Positions	Operation mechanism	Basic	Operation mechanism	
Direct acting double acting solenoid	4	2	㉜	Ⓔ		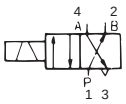 ㊟As stated above, JIS stipulates use if the relationship to the electrical signal need not be indicated. If this is clear, ㉜ can be indicated as an abbreviation of ㉛-◯-㉛.
Direct acting both sides solenoid	5	2	㉛	Ⓕ	㉛	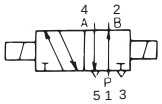
Direct acting double acting solenoid	5	2	㉜	Ⓕ		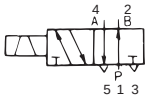
Indirect operation both sides solenoid	4	2	㊱	Ⓔ	㊱	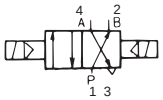
Indirect operation double acting solenoid	4	2	㊲	Ⓔ		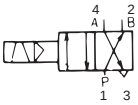
Indirect operation both sides solenoid	5	2	㊱	Ⓕ	㊱	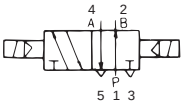
Indirect operation double acting solenoid	5	2	㊲	Ⓕ		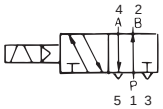
Direct acting all ports closed both sides solenoid spring/pressure centers	4	3	㉛ ㉓	Ⓖ	㉛ ㉓	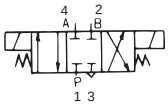
Direct acting all ports closed both sides solenoid spring/pressure centers	5	3	㉛ ㉓	Ⓗ	㉛ ㉓	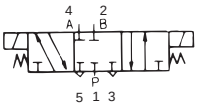
Direct acting A/B/R connection both sides solenoid spring/pressure centers	4	3	㉛ ㉓	Ⓘ	㉛ ㉓	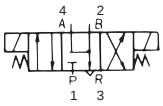
Direct acting A/B/R connection both sides solenoid spring/pressure centers	5	3	㉛ ㉓	Ⓙ	㉛ ㉓	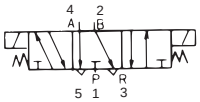
Direct acting P/A/B connection both sides solenoid spring/pressure centers	4	3	㉛	Ⓚ	㉛	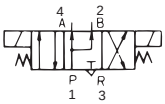

Name			Combination symbol			Symbol
Basic and operating method	No. of Ports	No. of Positions	Operation mechanism	Basic	Operation mechanism	
Direct acting P/A/B both sides solenoid spring/pressure centers used together	5	3	㉛ ㉓㊸	Ⓛ	㉛ ㊸㉓	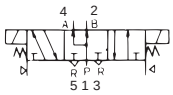
Direct acting P/A/B connection both sides solenoid with manual override			㉛ ⑩ ㉓㊸	Ⓛ	㉛ ⑩ ㊸㉓	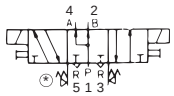 ㊟If the diagram is difficult to read when all symbols are indicated on both ends, separate symbols.
Indirect operation all ports closed both sides solenoid spring/pressure centers	4	3	㊱ ㉓	Ⓖ	㊱ ㉓	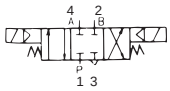
Indirect operation all ports closed both sides solenoid spring/pressure centers	5	3	㊱ ㉓㊸	Ⓗ	㊱ ㉓	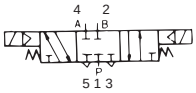
Indirect operation A/B/R connection Both sides solenoid spring/pressure centers used together	4	3	㊱ ㉓㊸	Ⓘ	㊱ ㊸㉓	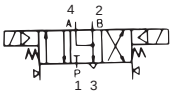
Indirect operation A/B/R connection Both sides solenoid spring/pressure centers used together	5	3	㊱ ㉓㊸	Ⓙ	㊱ ㊸㉓	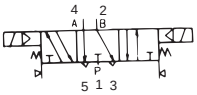
Indirect operation P/A/B connection Both sides solenoid spring/pressure center pilot with manual override	4	3	㊱ ⑩ ㉓	Ⓚ	㊱ ⑩ ㉓	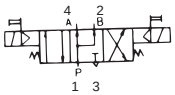
Indirect operation P/A/B connection Both sides solenoid spring/pressure center with manual override	5	3	㊱ ⑩ ㉓	Ⓛ	㊱ ⑩ ㉓	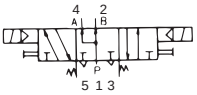

Note) Numerals are as indicated in JISB 8375 (ISO 5599).

Name			Combination symbol			Symbol
Basic and operating method	No. of Ports	No. of Positions	Operation mechanism	Basic	Operation mechanism	
(Proportional control valve) Direct acting solenoid proportional flow rate control valve	2		33	A	23	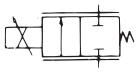
Direct acting solenoid proportional flow rate control valve	3		33	C	23	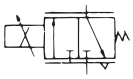
(Servo valve) Direct acting solenoid servo control spring/center	4		34 23	G	23	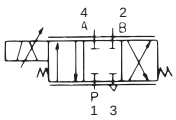
Direct acting Solenoid servo control spring/center	5		36 23	H	23	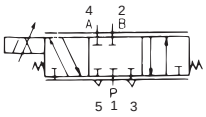

Note) Numerals are as indicated in JISB 8375 (ISO 5599).

4. Pressure control valve

Name	Symbol	Remarks
Relief valve	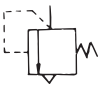	Direct acting or general symbol
Pilot operation relief valve	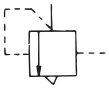	
Regulator	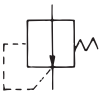	Non-relief
Regulator with relief	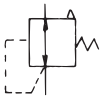	
Pilot operation regulator	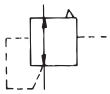	
Regulator with filter	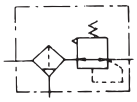	
Regulator with check valve	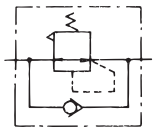	
Sequence valve	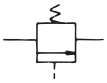	
Proportional electromagnetic pressure control valve		

5. Flow rate control valve

Name	Symbol	Remarks
Metering valve Variable metering valve	Detailed symbol Simplified symbol 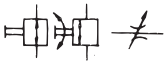	· The simplified symbols do not indicate the operation method or valve state. · Normally, there is no completely closed status
Stop valve		
Speed control valve		· Variable metering valve · One direction is free flow, while the other direction is controlled flow
Metering valve		
Metering valve with silencer	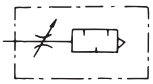	

6. Cylinder and motor

Name	Symbol	Remarks
Single acting cylinder	Detailed symbol Simplified symbol 	· Push type · Single rod · Exhaust to atmosphere
Single acting cylinder (with spring)	(1) (2) 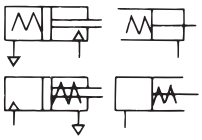	· Single rod (1) Rod pushed by spring force (2) Rod retracted by spring force
Double acting cylinder	(1) (2) 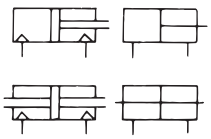	(1) Single rod (2) Double rod
Double acting telescopic cylinder	◎ 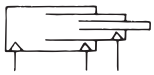	
Cylinder with adjustable stroke (head side) Cylinder with adjustable stroke (rod side)	◎ 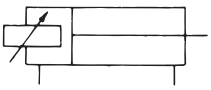 ◎ 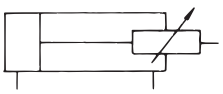	Reference In accordance with JIS B 8368 usage. In JIS B 0142:1984, the head side is the cap side and the rod side is the head side.
Cylinder with speed control valve	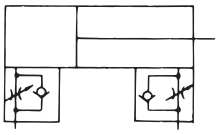	· Example of meter-out

Name	Symbol	Remarks
Cylinder with brake	◎ 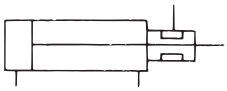	· Describe the braking method if required.
Cylinder with end lock	(1)◎ 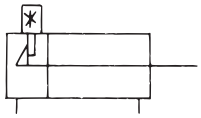 (2)◎ 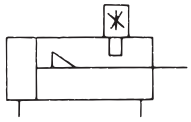	* Symbol showing how to release (1) Head side (2) Rod side Note: In accordance with JIS B 8368:1999 usage.
Cylinder with switch	◎ 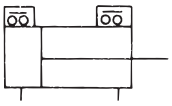	· Specify a and b contacts a b
Rotation-stop cylinder	◎ 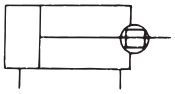	
Rodless cylinder	◎ 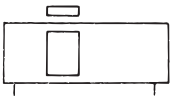	
Cylinder with valve	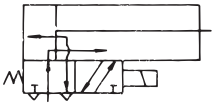	· Example of push type during energizing
Air motor	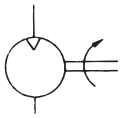 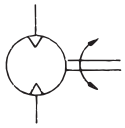	· 1-direction flow · 1 direction rotation · 2-direction flow · 2 direction rotation
Oscillating actuator	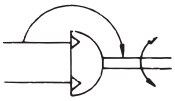	· Pneumatic pressure · Constant angle · 2-direction oscillation · Drawings of arrows to indicate relationship of the shaft rotating direction and flow direction are optional.

7. Power and tank

Name	Symbol	Remarks
Hydraulic (power) source		· General symbols
Pneumatic (power) source		· General symbols
Electric motor		
Driving motor		(Excluding electric motor)
Air receiver		

8. Air adjustment component

Name	Symbol	Remarks
Filter	(1) 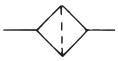 (2) 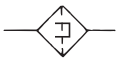 (3) 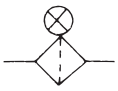	(1) General symbols (2) With magnet (3) With clogging display
Filter with drain discharger	(1) (2)	(1) Manual discharge (2) Automatic discharge
Oil mist separator	(1) 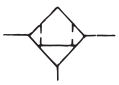 (2)	(1) Manual discharge (2) Automatic discharge
Micro mist separator	(1) ◎ (2) ◎ (3) ◎ 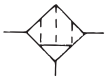	(1) Manual discharge (2) Automatic discharge (3) Deodorization filter
Drain discharger	(1) (2)	(1) Manual discharge (2) Automatic discharge
Air dryer		
Heat exchanger Cooler	(1) (2) (3) 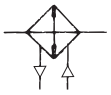	(1) Water cooling (when coolant piping path is not displayed) (2) Water cooling (when coolant piping path is displayed) (3) Air cooling

Name	Symbol	Remarks
Lubricator		All volume Selection
Pneumatic adjustment unit	Simplified symbol 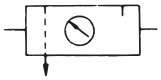 Detailed symbol 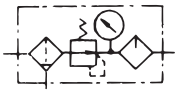	The vertical arrow indicates a discharger. Detailed symbol shows · Filter with manual exhaust valve · Non-relief regulator · An example of the all-volume lubricator
Oil mist separator for exhaust	◎ 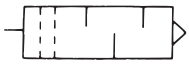	
Noise reduction device	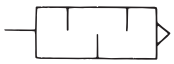	
Oil injector	◎ 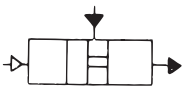	

9. Auxiliary components and other components

Name	Symbol	Remarks
Pneumatic - hydraulic converter	(1) 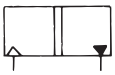 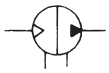	(1) Single acting (2) Continuous type
Booster	(1) 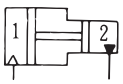 (2) 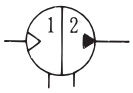	· For pressure ratio 1:2 · For Class 2 fluids (1) Single acting (2) Continuous type
Booster valve	◎	Pressure ratio 1:2
Delay valve	(Example) 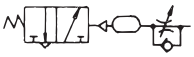	· Indicate with a compound symbol based on the mechanism
Buzzer		
Pressure switch	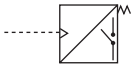	Can be indicated as follows if there is no chance for it to be misread: 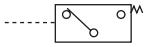

Name	Symbol	Remarks
Limit switch	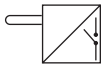	Can be indicated as follows if drawing could not be misread: 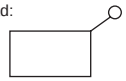
Air ejector	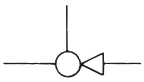	· As defined in JIS Z 8207
Pneumatic counter	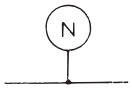	
Pressure display		· Simple display without measurement
Pressure gauge		
Differential pressure gauge		
Thermometer		
Galvanoscope		
Flow rate meter	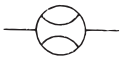	
Integrating flow gauge	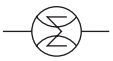	
Rotation speed gauge	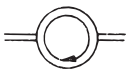	
Torque gauge	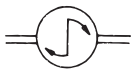	

(Refer to JISB0125-1:2001 and JPAS010)
Note: The ◎ mark indicates codes specific to JPAS010. Application is limited to those indicated.

CE Marking

CKD, with a wide range of EU Standards compliant components, supports customers' machine products to attain CE marking.

: Shown on EU Standards compliant products

What is CE Marking?

- CE Marking certifies that the product satisfies all EC Directive requirements which it is subject to.
- CE Marking serves as a product passport that allows products with CE Marking to be freely distributed in EU countries.
- Machines exported to the EU must comply with Machinery Directives, EMC Directives and Low-Voltage Directives, etc. In principle, CE Marking must be indicated on the final product marketed; therefore, as a rule, built-in components do not require CE Markings. If compliance of built-in parts (CKD products) with EU Standards can be verified, CE Marking of the final product (customer's machine product) can be easily obtained.

Applicable EC Directives

CKD's main components, such as solenoid valves, sensors, and direct drive actuator, are called on to comply with the Directives below. Many models already comply with EU Standards.

Directive	Requirement	Application
Machinery Directive (2006/42/EC)	Requirements on safety for machinery	■ Machines with drive sections Components such as solenoid valves are not subject to this compliance, but the user can obtain CE Marking certification more easily by complying with Standards.
EMC Directive (2014/30/ EU)	Electromagnetic interference generation (EMI emission) and electromagnetic interference elimination performance countermeasures (EMS immunity)	■ Devices generating electromagnetic interference or affected by electromagnetic interference Solenoid valves composed of a simple solenoid are not affected by electromagnetic interference, but the user can obtain CE Marking certification more easily by complying with Standards.
Low-Voltage Directive (2014/35/EU)	Electrical safety with regard to electric shock, etc.	■ Devices operating at 50 VAC to 1000 VAC and 75 VDC to 1500 VDC
Pressure Equipment Directive (2014/68/EU)	Safety regarding the dangers of fluid energy found in pressure equipment	■ When specific criteria are exceeded within pressure equipment
Simple Pressure Vessels Directive (2014/29/ EU)	Safety with regard to vessel leakage and explosion	■ Containers welded and for which total max. working pressure and volume (PV/S) exceeds 50 bar/liter The CKD air tank (AT) does not comply with this directive, and cannot be exported to the EU.
RoHS Directive (2011/65/ EU)	Environmentally active 6 restricted substances	■ Electrical and electronics devices
2011/65/EU and (EU)2015/863	Environmentally active 10 restricted substances	■ Electrical and electronics devices

CE marking is applicable for the European Union (EU) countries and European Free Trade Association (EFTA) countries, in addition to Turkey.

CKD product conformity to EU standards

⚠ Depending on specifications and detailed model No. combinations, compatible parts may not be available. Contact your CKD Sales Representative for details.
Visit our website for the latest information.
Website address https://www.ckd.co.jp/en/support/eu/

CKD RoHS **Compliance**

CKD's target is to develop environmentally friendly products.

RoHS

RoHS is the abbreviation for Restriction of the use of certain Hazardous Substances in electrical and electronic equipment.
This is the directive prohibiting use of certain hazardous substances issued by the EU.

- CKD products are approved as in conformity to RoHS directives in order of priority from July 1, 2006.
- RoHS-compliant products are designed to reduce environmental load and can be distributed in the EU countries.

CKD **Environment Policy**

Based on the CKD Environment Policy enacted in 2001, CKD has been promoting company-wide environment management activities to protect the global environment.

CKD Environment Policy

1. Development and sales of low-environmental load products
2. Reduction of environmental pollutants
3. Promotion of energy and resource saving
4. Reduction of waste

CKD's **Compliance with** RoHS

From July 2006, we have sequentially enforced RoHS compliance of our Component's major products. This catalog shows RoHS-compliant products with the "RoHS-compliant" mark.

(Note) Check our website for the latest supported Status.

Technical data

RoHS Directive

(Directive 2011/65/EU of 27 January 2003 on the restriction of the use of certain hazardous substances in electrical and electronic equipment)

This directive assimilates laws related to limiting the use of hazardous substances in electrical and electronics components set forth by each EU member state, contributes to the protection of human health, and provides sufficient means for processing and recycling waste electrical and electric products.

1 Scope of application

1. Large appliances
2. Small appliances
3. IT equipment and telecommunications equipment
4. Consumer equipment
5. Lighting equipment
6. Electric tools
7. Toys, leisure and sports Components
8. Medical equipment and in-vitro diagnostic medical equipment
9. Monitoring and control equipment, industrial monitoring and control equipment
10. Vending machines
11. Other electrical and electronic Components

Our Component products are mainly classified into Category 9, IndustrialCorre-sponds to monitoring/control equipment. (Some category 8 medical Components and non-applicable products are also available)

2 Objective

Restricted substances (2011/65/EU)

- lead, mercury, cadmium, sixValent chromium, polybrominated biphenyls (PBBs)
- Polybrominated diphenyl ethers (PBDE)

Substances subject to additional regulation ((EU) 2015/863)

- Specified phthalates (DEHP, DBP, BBP, DIBP)

Category 8 and 9 electrical and electronic components containing any of the above will start from July 22, 2021. From July 22, 2019 on, categories other than 8 and 9 are generally prohibited from entering the EU.

ISO9001/ISO14001 Certification

Providing safe quality, friendly to users, machines and environment.

CKD has acquired International Standard ISO9001 and ISO14001 certification and structured a quality and environment management system.
With safety, environment and energy conservation as our most important priorities, we are working company-wide to promote safe product and quality creation friendly to users, machines, society and the global environment.

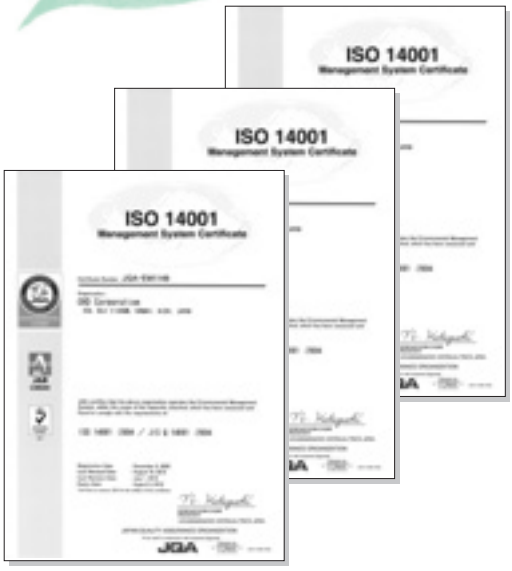

International Standard ISO9001 Certification

International Standard for quality management systems.

CKD's production division acquired certification in 1994, and all CKD divisions, including the sales division, acquired certification in 2007.

Approach to quality system

To respond to diverse product needs, CKD develops user-friendly products individualized for each industry. We conduct quality management activities to increase customer satisfaction.

International Standard ISO14001 Certification

International Standard for environment management systems. CKD's production division acquired certification in 2000, and all CKD divisions, including the sales division, acquired certification in 2003.

Approach to environment and energy conservation

CKD is aware that preserving the global environment is an utmost priority. We conduct environmental management activities based on the CKD Environment Policy.

MEMO

MEMO

Model No. [index in alphabetical order]

Model No.	Model	Catalog No./page
HS	Motorized valve for gas combustion system	1024
HSV	Ⓢ Manual selector valve/standard	CB-023SA

■ Listed catalog No.

CB-029SA ... Pneumatic Cylinders I
CB-030SA ... Pneumatic Cylinders II
CB-023SA ... Pneumatic Valves
CB-024SA ... Pneumatic, Vacuum and Auxiliary Components
CB-03-1SA ... General Purpose Valves

■ Page

Specifications/model No. pages for the models listed in this catalog.

■ Codes (pneumatic valves and general purpose valves)

Ⓓ... Discrete valves
Ⓘ... Individual wiring manifolds
Ⓑ... Block manifolds
Ⓡ... Reduced wiring manifolds
Ⓧ... Mix manifolds
Ⓜ... Manifolds

Model No.	Model	Catalog No./page
1		
1219	Micro alescer/micro naught (oil removal)	CB-024SA
1238	Micro alescer/micro naught (oil removal)	CB-024SA
1326	Heavy duty air filter	CB-024SA
1126 -*-*Y	Submicron air filter (for tar removal)	CB-024SA
1126-*-E	Air filter	CB-024SA
1138 -*-*Y	Submicron air filter (for tar removal)	CB-024SA
1138-*-E	Air filter	CB-024SA
1226 (J)	Micro alescer/micro naught (oil removal)	CB-024SA
1226 (J) -*-X	Micro alescer/odor naught (odor removal)	CB-024SA
1238-*-X	Micro alescer/odor naught (odor removal)	CB-024SA
1326 -*-*Y	Submicron air filter (for tar removal)	CB-024SA
2		
2215	Regulator	CB-024SA
2216	Regulator	CB-024SA
2302 to 2304-*C	Dial air regulator	CB-024SA
2302 to 2304-*C-R	Remote dial air regulator	CB-024SA
2415	Reverse regulator (check valve integrated)	CB-024SA
2419	Reverse regulator (check valve integrated)	CB-024SA
2619	Regulator	CB-024SA
2QV	Quick valve with push-in fitting	CB-024SA
3		
3003E to 3005E	Lubricator/econo-mist	CB-024SA
3003E-*C-V	Lubricator/auto-fill	CB-024SA
3GA1/2/3	Ⓓ Pilot operated 3-port valve/ body piping	CB-023SA
3GA1/2/3	Ⓓ Pilot operated 3-port valve (Master valve)/body piping	CB-023SA
3GB1/2	Ⓓ Pilot operated two 3-port valves integrated/base piping	CB-023SA
3GD1/2/3	Ⓓ Pilot operated 3-port valve/ body piping	CB-023SA
3GD1/2*0EJ	Ⓓ Intrinsically safe explosion-proof pilot operated 3-port valve/body piping	CB-023SA
3GE1/2	Ⓓ Pilot operated two 3-port valves integrated/base piping	CB-023SA
3GE1/2*0EJ	Ⓓ Intrinsically safe explosion-proof pilot operated 3-port valve/base piping	CB-023SA
3KA1	Ⓓ Pilot operated 3-port valve/ body piping	CB-023SA
3KA1	Ⓓ Pilot operated 3-port valve (Master valve)/body piping	CB-023SA
3MA0	Ⓓ Direct acting 3-port valve/ Body piping	CB-023SA
3MB0	Ⓓ Direct acting 3-port valve/ Sub-plate piping	CB-023SA
3PA1/2	Ⓓ Direct acting 3-port valve/ Body piping	CB-023SA
3PB1/2	Ⓓ Direct acting 3-port valve/ Sub-plate piping	CB-023SA
3QB1	Ⓓ Direct acting 3-port valve/ Sub-plate piping	CB-023SA
3QE1	Ⓓ Direct acting 3-port valve/ Sub-plate piping	CB-023SA
3QRA1	Ⓓ Direct acting 3-port valve/ Body piping	CB-023SA
3QRB1	Ⓓ Direct acting 3-port valve/ Sub-plate piping	CB-023SA
3QV	Quick valve with push-in fitting	CB-024SA

4

4001, 4002	Desiccant air dryer/ Manual air dryer	CB-024SA
46011	Urethane tube	CB-024SA
4F0/1/2/3	Ⓓ Pilot operated 5-port valve/ body piping	CB-023SA
4F0/1/2/3	Ⓓ Pilot operated 5-port valve (Master valve)/body piping	CB-023SA
4F2/3	Ⓓ Pilot operated 5-port valve, outdoor type	CB-023SA
4F30EX**	Ⓓ Explosion-proof pilot operated 5-port valve/body piping	CB-023SA
4F30E**	Ⓓ Explosion-proof pilot operated 5-port valve/body piping	CB-023SA
4F4/5/6/7	Ⓓ Pilot operated 5-port valve/ sub-plate piping	CB-023SA
4F4/5/6/7	Ⓓ Pilot operated 5-port valve (Master valve)/sub-plate piping	CB-023SA
4F4/5/6/70EX**	Ⓓ Explosion-proof pilot operated 5-port valve/body piping	CB-023SA
4F4/5/6/70E**	Ⓓ Explosion-proof pilot operated 5-port valve/sub-plate piping	CB-023SA
4GA1/2/3	Ⓓ Pilot operated 5-port valve/ body piping	CB-023SA
4GA1/2/3	Ⓓ Pilot operated 5-port valve (Master valve)/body piping	CB-023SA
4GA4	Ⓓ Pilot operated 5-port valve/ body piping	CB-023SA
4GB1/2/3	Ⓓ Pilot operated 5-port valve/ base piping	CB-023SA
4GB1/2/3	Ⓓ Pilot operated 5-port valve (Master valve)/base piping	CB-023SA
4GB4	Ⓓ Pilot operated 5-port valve/ base piping	CB-023SA
4GD1/2/3	Ⓓ Pilot operated 5-port valve/ body piping	CB-023SA
4GD1/2/3/4*0EJ	Ⓓ Intrinsically safe explosion-proof pilot operated 5-port valve/body piping	CB-023SA
4GE1/2/3	Ⓓ Pilot operated 5-port valve/ base piping	CB-023SA
4GE1/2/3/4*0EJ	Ⓓ Intrinsically safe explosion-proof pilot operated 5-port valve/base piping	CB-023SA
4KA1/2/3/4	Ⓓ Pilot operated 5-port valve Body piping	CB-023SA
4KA1/2/3/4	Ⓓ Pilot operated 5-port valve (Master valve)/body piping	CB-023SA
4KB1/2/3/4	Ⓓ Pilot operated 5-port valve/ sub-plate piping	CB-023SA
4KB1/2/3/4	Ⓓ pilot operated 4, 5-port valve (Master valve)/sub-plate piping	CB-023SA
4SA0	Ⓓ Pilot operated 5-port valve/ body piping	CB-023SA
4SB0	Ⓓ Pilot operated 5-port valve/ sub-plate piping	CB-023SA

5

5100-4C	Heavy duty drain	CB-024SA

6

6119	Moisture indicator	CB-024SA

A

A	Marine cable gland	CB-03-1SA
A100 to 800-W	Piping adapter/Standard White Series	CB-024SA
A101 to 801-W	Radial piping adapter/Standard White Series	CB-024SA
A1019	Air filter	CB-024SA
A1338	Heavy duty air filter	CB-024SA
A1338-*Y	Submicron air filter (for tar removal)	CB-024SA
A2-3400	Ultra-low temperature 2-port solenoid valve	CB-03-1SA
A2-5201	Direct acting 2-port solenoid valve (for high frequency of use)	CB-03-1SA
A2-5202	Pilot operated 2-port solenoid valve (for high frequency of use)	CB-03-1SA
A2-5800	Ultra-low temperature 2-port solenoid valve	CB-03-1SA
A2-6500	Proportional control valve	CB-03-1SA
A3019	Lubricator/econo-mist	CB-024SA
AB21	Direct acting 2-port solenoid valve (General purpose)	CB-03-1SA
AB31	Direct acting 2-port solenoid valve, single unit (General purpose)	CB-03-1SA
AB31-Z	Direct acting 2-port solenoid valve for dry air (General purpose)	CB-03-1SA
AB41	Direct acting 2-port solenoid valve, single unit (General purpose)	CB-03-1SA
AB41E2	Explosion-proof direct acting 2-port solenoid valve (General purpose)/d2G2	CB-03-1SA

Model No. [index in alphabetical order]

Model No.	Model	Catalog No./page
A		
AB41E4	Explosion-proof direct acting 2-port solenoid valve (General purpose)/d2G4	CB-03-1SA
AB41E4-Z	Explosion-proof direct acting 2-port solenoid valve for dry air (General purpose)/d2G4	CB-03-1SA
AB41EX2	Explosion-proof direct acting 2-port solenoid valve (General purpose)/Exd II BT2	CB-03-1SA
AB41EX4	Explosion-proof direct acting 2-port solenoid valve (General purpose)/Exd II BT4	CB-03-1SA
AB41-Z	Direct acting 2-port solenoid valve for dry air (General purpose)	CB-03-1SA
AB42	Direct acting 2-port solenoid valve, single unit (General purpose)	CB-03-1SA
AB42E4	Explosion-proof direct acting 2-port solenoid valve (General purpose)/d2G4	CB-03-1SA
AB71	Direct acting 2-port solenoid valve (General purpose)/Large bore size	CB-03-1SA
ABP	Air booster	CB-024SA
AD11	Pilot operated 2-port solenoid valve (General purpose)/Diaphragm drive	CB-03-1SA
AD11E4	Explosion-proof pilot operated 2-port solenoid valve (General purpose)/Diaphragm drive/d2G4	CB-03-1SA
AD11EX4	Explosion-proof pilot operated 2-port solenoid valve (General purpose)/Diaphragm drive/Exd II BT4	CB-03-1SA
AD12	Pilot operated 2-port solenoid valve (General purpose)/diaphragm drive	CB-03-1SA
AD12E4	Explosion-proof pilot operated 2-port solenoid valve (General purpose)/diaphragm drive/d2G4	CB-03-1SA
AD21	Pilot operated 2-port solenoid valve (General purpose)/Diaphragm drive	CB-03-1SA
AD21E4	Explosion-proof pilot operated 2-port solenoid valve (General purpose)/diaphragm drive/d2G4	CB-03-1SA
AD21EX4	Explosion-proof pilot operated 2-port solenoid valve (General purpose)/Diaphragm drive/Exd II BT4	CB-03-1SA
AD22	Pilot operated 2-port solenoid valve (General purpose)/Diaphragm drive	CB-03-1SA
AD22E4	Explosion-proof pilot operated 2-port solenoid valve (General purpose)/Diaphragm drive/d2G4	CB-03-1SA
ADK11	Pilot kick operated 2-port solenoid valve (General purpose)/Diaphragm drive	CB-03-1SA
ADK11-W	Pilot kick operated 2-port solenoid valve (General purpose)/Diaphragm drive/Outdoor Series	CB-03-1SA
ADK11E4	Explosion-proof pilot kick operated 2-port solenoid valve (General purpose)/diaphragm drive/d2G4	CB-03-1SA
ADK11EX4	Explosion-proof pilot operated 2-port solenoid valve (General purpose)/Diaphragm drive/Exd II BT4	CB-03-1SA
ADK11-Z	Pilot kick 2-port solenoid valve for dry air (General purpose)	CB-03-1SA
ADK12	Pilot kick operated 2-port solenoid valve (General purpose)/diaphragm drive	CB-03-1SA
ADK12E4	Explosion-proof pilot kick operated 2-port solenoid valve (General purpose)/diaphragm drive/d2G4	CB-03-1SA
ADK21	Pilot kick operated 2-port solenoid valve (General purpose)/diaphragm drive	CB-03-1SA
AF2-P**	Medium main line filter/ Solids/oil removing filter	CB-024SA
AF2-M**	Medium main line filter/ High-performance solids/oil removing filter	CB-024SA
AF2-X**	Medium main line filter/ /Odor removal filter	CB-024SA
AF3016M to 3256M	Large main line filter (popular)/ High-performance oil removing filter	CB-024SA
AF3016P to 3256P	Large main line filter (popular)/ Pre-filter	CB-024SA
AF3016S to 3256S	Large main line filter (popular)/ Oil removing filter	CB-024SA
AF3016X to 3256X	Large main line filter (popular)/ Activated carbon filter	CB-024SA
AF4004M to AF4020M	Medium main line filter (oil-prohibited)/ High-performance oil removing filter	CB-024SA
AF4004P to AF4020P	Medium main line filter (oil-prohibited)/ Pre-filter	CB-024SA
AF4004S to AF4020S	Medium main line filter (oil-prohibited)/ Solid removing filter	CB-024SA
AF4004X to AF4020X	Medium main line filter (oil-prohibited)/ Odor removal filter	CB-024SA
AF5016M to 5256M	Large main line filter (oil-prohibited)/ High-performance oil removing filter	CB-024SA
AF5016P to 5256P	Large main line filter (oil-prohibited)/ Pre-filter	CB-024SA
AF5016S to 5256S	Large main line filter (oil-prohibited)/ Oil removing filter	CB-024SA
AF5016X to 5256X	Large main line filter (oil-prohibited)/ Activated carbon filter	CB-024SA
AG3*-Z	Direct acting 3-port solenoid valve for dry air (General purpose)	CB-03-1SA
AG31	Direct acting 3-port solenoid valve, single unit (General purpose)	CB-03-1SA
AG33	Direct acting 3-port solenoid valve, single unit (General purpose)	CB-03-1SA

AG34	Direct acting 3-port solenoid valve, single unit (General purpose)	CB-03-1SA
AG4*E4-Z	Explosion-proof direct acting 3-port solenoid valve for dry air (General purpose)/d2G4	CB-03-1SA
AG4*-Z	Direct acting 3-port solenoid valve for dry air (General purpose)	CB-03-1SA
AG41	Direct acting 3-port solenoid valve, single unit (General purpose)	CB-03-1SA
AG41E4	Explosion-proof direct acting 3-port solenoid valve (General purpose)/d2G4	CB-03-1SA
AG41EX4	Explosion-proof direct acting 3-port solenoid valve (General purpose)/Exd II BT4	CB-03-1SA
AG43	Direct acting 3-port solenoid valve, single unit (General purpose)	CB-03-1SA
AG43E4	Explosion-proof direct acting 3-port solenoid valve (General purpose)/d2G4	CB-03-1SA
AG43EX4	Explosion-proof direct acting 3-port solenoid valve (General purpose)/Exd II BT4	CB-03-1SA
AG44	Direct acting 3-port solenoid valve, single unit (General purpose)	CB-03-1SA
AG44E4	Explosion-proof direct acting 3-port solenoid valve (General purpose)/d2G4	CB-03-1SA
AG44EX4	Explosion-proof direct acting 3-port solenoid valve (General purpose)/Exd II BT4	CB-03-1SA
AGD0*R	Air operated valve for process gas	CB-03-1SA
AGD1/2*R	Air operated valve for process gas	CB-03-1SA
AHB	Air hydraulic booster	CB-029SA CB-030SA Ending Page 134
AL	Air lamp/logic valve	CB-024SA
AM4F0	Ⓘ Pilot operated 5-port valve/ body piping	CB-023SA
AMD	Air operated valve for chemical liquids (2-port)	CB-03-1SA
AMD0*3R	Air operated valve for chemical liquids (2-port)	CB-03-1SA
AMD3*3R	Air operated valve for chemical liquids (2-port)	CB-03-1SA
AMD4*3R	Air operated valve for chemical liquids (2-port)	CB-03-1SA
AMD5*3R	Air operated valve for chemical liquids (2-port)	CB-03-1SA
AMD2**	Air operated valve for chemical liquids (2-port)	CB-03-1SA
AMDS	Air operated valve for chemical liquids/drip prevention valve integrated	CB-03-1SA
AMDZ*3R	Air operated valve for chemical liquids (2-port)	CB-03-1SA
AMG	Air operated valve for chemical liquids (3-port)	CB-03-1SA
AMGZ03R	Air operated valve for chemical liquids (3-port valve)	CB-03-1SA
AMS	Drip prevention valve for chemical liquids	CB-03-1SA
AP11	Pilot operated 2-port solenoid valve (General purpose)/Piston drive	CB-03-1SA
AP11E2	Explosion-proof pilot operated 2-port solenoid valve (General purpose)/piston drive/d2G2	CB-03-1SA
AP11E4	Explosion-proof pilot operated 2-port solenoid valve (General purpose)/piston drive/d2G4	CB-03-1SA
AP11EX2	Explosion-proof pilot operated 2-port solenoid valve (General purpose)/piston drive/Exd II BT2	CB-03-1SA
AP11EX4	Explosion-proof pilot operated 2-port solenoid valve (General purpose)/piston drive/Exd II BT4	CB-03-1SA
AP12	Pilot operated 2-port solenoid valve (General purpose)/Piston drive	CB-03-1SA
AP12E2	Explosion-proof pilot operated 2-port solenoid valve (General purpose)/piston drive/d2G2	CB-03-1SA
AP12E4	Explosion-proof pilot operated 2-port solenoid valve (General purpose)/piston drive/d2G4	CB-03-1SA
AP21	Pilot operated 2-port solenoid valve (General purpose)/Piston drive	CB-03-1SA
AP21E2	Explosion-proof pilot operated 2-port solenoid valve (General purpose)/piston drive/d2G2	CB-03-1SA
AP21EX2	Explosion-proof pilot operated 2-port solenoid valve (General purpose)/piston drive/Exd II BT2	CB-03-1SA
AP21E4	Explosion-proof pilot operated 2-port solenoid valve (General purpose)/piston drive/d2G4	CB-03-1SA
AP21EX4	Explosion-proof pilot operated 2-port solenoid valve (General purpose)/piston drive/Exd II BT4	CB-03-1SA
AP22	Pilot operated 2-port solenoid valve (General purpose)/Piston drive	CB-03-1SA
AP22E2	Explosion-proof pilot operated 2-port solenoid valve (General purpose)/piston drive/d2G2	CB-03-1SA
AP22E4	Explosion-proof pilot operated 2-port solenoid valve (General purpose)/piston drive/d2G4	CB-03-1SA
APA1	PEL system/Switching element	CB-024SA
APA3	PEL system/ Switching element/manifold	CB-024SA
APA4	PEL system/detection nozzle	CB-024SA
APA6	Piping instrument/air sensor	CB-024SA

Listed catalog No.

CB-029SA ... Pneumatic Cylinders I
CB-030SA ... Pneumatic Cylinders II
CB-023SA ... Pneumatic Valves
CB-024SA ... Pneumatic, Vacuum and Auxiliary Components
CB-03-1SA ... General Purpose Valves

Codes (pneumatic valves and general purpose valves)

Ⓓ... Discrete valves
Ⓘ... Individual wiring manifolds
Ⓑ... Block manifolds
Ⓡ... Reduced wiring manifolds
Ⓧ... Mix manifolds
Ⓜ... Manifolds

Model No. [index in alphabetical order]

Model No.	Model	Catalog No./page
A		
APE	Mechanical pressure switch	CB-024SA
APK11	Pilot kick operated 2-port solenoid valve (General purpose)/Piston drive	CB-03-1SA
APK21	Pilot kick operated 2-port solenoid valve (General purpose)/Piston drive	CB-03-1SA
APS	Reed switch compact mechanical pressure switch	CB-024SA
AT	Air tank	CB-024SA
AVB**3	Air operated valve for high vacuum	CB-03-1SA
AVB**7	Air operated valve for high vacuum	CB-03-1SA
AZ	Tube cutter	CB-024SA
B		
B	Booster	CB-029SA CB-030SA Ending Page 134
B*P51*	Ⓘ Pilot operated 2, 3, 5-port valve/metal base	CB-023SA
B110 to 820-W	Bracket/for modular F.R.L./ Standard White Series	CB-024SA
B2019	Regulator	CB-024SA
B512*	Ⓓ Pilot operated 2-port valve/ sub-base	CB-023SA
B513*	Ⓓ Pilot operated 3-port valve/ sub-base	CB-023SA
B5142	Ⓓ Pilot operated 5-port valve/ sub-base	CB-023SA
B6061	Relief valve	CB-024SA
B7019	F.R. unit	CB-024SA
BBS-A	Balancer unit, automatic pressure adjustment	CB-030SA 1258
BBS-O	Balancer unit, fixed pressure adjustment	CB-030SA 1270
BHA	Compact cross roller parallel hand	CB-030SA 1600
BHA-FC	Mechanical hand	CB-030SA 1884
BHA-LN	Hand with length measuring sensor/ Cross roller parallel hand with sensor	CB-030SA 1478
BHE	Centering hand	CB-030SA 1752
BHE-LN	Hand with length measuring sensor/Centering hand with sensor	CB-030SA 1478
BHG	Compact cross roller parallel hand with rubber cover	CB-030SA 1606
BHG-LN	Hand with length measuring sensor/Rubber covered cross roller parallel hand with sensor	CB-030SA 1478
BN	Air blow nozzle General	CB-024SA
BNB	Air blow nozzle Blower specification	CB-024SA
BNE-F	Air blow nozzle Flat	CB-024SA
BNE-R	Air blow nozzle Round	CB-024SA
BSA2	Miniature cross roller parallel hand	CB-030SA 1596
BW7019	Filter/Regulator Outdoor Series	CB-024SA
C		
C1000 to 8000-P6	F.R.L. combination/copper and PTFE free series	CB-024SA
C1000 to 8000-W	F.R.L. combination/Standard White Series	CB-024SA
C1010 to 8010-W	W.L. combination/Standard White Series	CB-024SA
C1020 to 8020-W	F.R. combination/Standard White Series	CB-024SA
C1030 to 8030-W	F.M.R. combination/Standard White Series	CB-024SA
C1040 to 8040-W	W.M. combination/Standard White Series	CB-024SA
C1050 to 8050-W	R.M. combination/Standard White Series	CB-024SA
C1060 to 8060-W	F.M. combination/Standard White Series	CB-024SA
C25N-B	Governor for medium pressure gas	CB-03-1SA
C3070 to 8070-W	F.F.M. combination/Standard White Series	CB-024SA
CAC4	Clamp cylinder/double acting/single rod	CB-030SA 1008
CAC4-G4	Clamp cylinder/ Double acting/anti-spatter adherence	CB-030SA 1020
CAC-N32/40	Lightweight clamp cylinder/ Double acting/single rod	CB-030SA 1046
CAT	Cartridge cylinder/single acting, push type	1340
CAU30	Clean air unit	CB-024SA
CAV2	Cylinder with valve/ double acting/lubrication	710
CAV2-N	Cylinder with valve/ double acting/no-lubrication	710
CCH	Coolant check valve	CB-03-1SA
CG	Fiber tube push-in fitting (clean-room)	CB-024SA
CHB	Air operated 2-port ball valve (compact rotary valve) /double acting	CB-03-1SA
CHBF	Air operated 2-port ball valve (compact rotary valve) /double acting/full bore	CB-03-1SA
CHBF-R*	Air operated 2-port ball valve (compact rotary valve) /single acting/full bore	CB-03-1SA
CHBF-V*	Air operated 2-port ball valve (compact rotary valve) /With solenoid valve/double acting/full bore	CB-03-1SA
CHBF-X*	Air operated 2-port ball valve (compact rotary valve) /With solenoid valve/single acting/full bore	CB-03-1SA

CHB-R*	Air operated 2-port ball valve (compact rotary valve) /single acting	CB-03-1SA
CHB-V*	Air operated 2-port ball valve (compact rotary valve) /With solenoid valve/double acting	CB-03-1SA
CHB-X*	Air operated 2-port ball valve (compact rotary valve) /With solenoid valve/single acting	CB-03-1SA
CHB-W	Air operated 2-port ball valve (compact rotary valve) /double acting/Outdoor Series	CB-03-1SA
CHB-WR*	Air operated 2-port ball valve (compact rotary valve) /single acting/Outdoor Series	CB-03-1SA
CHB-WV1	Air operated 2-port ball valve (compact rotary valve) /With solenoid valve/double acting / Outdoor Series	CB-03-1SA
CHB-WX1	Air operated 2-port ball valve (compact rotary valve) /With solenoid valve/single acting / Outdoor Series	CB-03-1SA
CHC	Auto hand changer	CB-030SA 1874
CHG	Air operated 3-port ball valve (compact rotary valve) /double acting	CB-03-1SA
CHG-R*	Air operated 3-port ball valve (compact rotary valve) /single acting	CB-03-1SA
CHG-V*	Air operated 3-port ball valve (compact rotary valve) /With solenoid valve/double acting	CB-03-1SA
CHG-X*	Air operated 3-port ball valve (compact rotary valve) /With solenoid valve/single acting	CB-03-1SA
CHG-W	Air operated 3-port ball valve (compact rotary valve) /double acting/Outdoor Series	CB-03-1SA
CHG-WR*	Air operated 3-port ball valve (compact rotary valve) /single acting/Outdoor Series	CB-03-1SA
CHG-WV1	Air operated 3-port ball valve (compact rotary valve) /With solenoid valve/double acting / Outdoor Series	CB-03-1SA
CHG-WX1	Air operated 3-port ball valve (compact rotary valve) /With solenoid valve/single acting / Outdoor Series	CB-03-1SA
CHL	Check valve with push-in fitting	CB-024SA
CHV2	Check valve	CB-024SA
CK	3-way jaw long stroke chuck	CB-030SA 1820
CKA	3-way jaw thin chuck	CB-030SA 1826
CKF	Hollow chuck	CB-030SA 1852
CKG	3-way jaw bearing chuck	CB-030SA 1814
CKH2	Powerful chuck with high gripping force	CB-030SA 1800
CKJ	Ultra long stroke chuck	CB-030SA 1858
CKL2	Powerful chuck	CB-030SA 1774
CKL2-*-HC	Position locking powerful chuck	CB-030SA 1794
CKL2-FC	Mechanical chuck	CB-030SA 1886
CKLB2	2-way powerful chuck	CB-030SA 1806
CKS	Thin chuck	CB-030SA 1834
CKS-F	Slim chuck (hollow)	CB-030SA 1844
CKV2	Compact cylinder with valve/ double acting/single rod	680
CKV2-M	Compact cylinder with valve/ double acting/rotation-stop	692
CMA2	Medium bore size cylinder/double acting/single rod	208
CMA2-E	Medium bore size cylinder/double acting/direct mounting	222
CMK2	Small bore size cylinder/double acting/single rod	86
CMK2-*C	Small bore size cylinder/double acting/rubber-air cushioned	128
CMK2-B	Small bore size cylinder/double acting/back to back	160
CMK2-C	Small bore size cylinder/double acting/air cushioned	136
CMK2-D	Small bore size cylinder/double acting/double rod	154
CMK2-F	Small bore size cylinder/double acting/fine speed	148
CMK2-G2/G3	Small bore size cylinder Double acting/coolant proof	182
CMK2-H	Small bore size cylinder/double acting/low hydraulic	178
CMK2-JG2/JG3	Small bore size cylinder/double acting/stainless steel	188
CMK2-M	Small bore size cylinder/double acting/rotation-stop	166
CMK2-P	Small bore size cylinder/ Double acting/stroke adjustable/push	112
CMK2-Q	Small bore size cylinder/double acting/position locking	142
CMK2-R	Small bore size cylinder/ Double acting/stroke adjustable/pull	118
CMK2-S	Small bore size cylinder/single acting/push	100
CMK2-SR	Small bore size cylinder/single acting/pull	106
CMK2-T	Small bore size cylinder/double acting/heat resistance	124
CMK2-Z	Small bore size cylinder/ Double acting/built-in speed controller	172
COV*2	Cylinder with valve/ With valve/double acting/lubrication	710
COV*2-N	Cylinder with valve/ With valve/double acting/no-lubrication	710

Listed catalog No.

CB-029SA ... Pneumatic Cylinders I
CB-030SA ... Pneumatic Cylinders II
CB-023SA ... Pneumatic Valves
CB-024SA ... Pneumatic, Vacuum and Auxiliary Components
CB-03-1SA ... General Purpose Valves

Codes (pneumatic valves and general purpose valves)

Ⓓ... Discrete valves
Ⓘ... Individual wiring manifolds
Ⓑ... Block manifolds
Ⓡ... Reduced wiring manifolds
Ⓧ... Mix manifolds
Ⓜ... Manifolds

Model No. [index in alphabetical order]

Model No.	Model	Catalog No./page
C		
CPD	Electronic pressure switch for coolant (with digital display)	CB-024SA
CPE	Mechanical pressure switch for coolant (for low pressure)	CB-024SA
CSB	Air operated 2-port ball valve for steam (compact rotary valve)/standard bore	CB-03-1SA
CSBF	Air operated 2-port ball valve for steam (compact rotary valve)/full bore	CB-03-1SA
CSBF-R	Air operated 2-port ball valve for steam (compact rotary valve)/full bore	CB-03-1SA
CSB-R*	Air operated 2-port ball valve for steam (compact rotary valve)/standard bore	CB-03-1SA
CSB-W	Air operated 2-port ball valve for steam (compact rotary valve)/Standard bore/Outdoor Series	CB-03-1SA
CSB-WR*	Air operated 2-port ball valve for steam (compact rotary valve)/Standard bore/Outdoor Series	CB-03-1SA
CV3E	Air operated 3-port valve for low pressure (coolant valve)	CB-03-1SA
CVE2-05/10	Air operated 2-port valve for low pressure (coolant valve)	CB-03-1SA
CVE2-16/30	Air operated 2-port valve for medium pressure (coolant valve)	CB-03-1SA
CVE22-05/10	Air operated 2-port valve for low pressure (coolant valve)	CB-03-1SA
CVE22-16/30	Air operated 2-port valve for medium pressure (coolant valve)	CB-03-1SA
CVE22-70	Air operated 2-port valve for high pressure (coolant valve)	CB-03-1SA
CVE2-70	Air operated 2-port valve for high pressure (coolant valve)	CB-03-1SA
CVE3-35/70	Air operated 3-port valve for medium and high pressure (coolant valve)	CB-03-1SA
CVS3E	Air operated 3-port valve for low pressure (coolant valve)/with solenoid valve	CB-03-1SA
CVSE2-05/10	Air operated 2-port valve for low pressure (coolant valve)/with solenoid valve	CB-03-1SA
CVSE2-15AX039	Air operated 2-port valve with solenoid valve (coolant control)/high pressure coolant valve	CB-03-1SA
CVSE2-16/30	Air operated 2-port valve for medium pressure (coolant valve) /with solenoid valve	CB-03-1SA
CVSE2-20AX040	Air operated 2-port valve with solenoid valve (coolant control)/high pressure coolant valve	CB-03-1SA
CVSE2-25AX041	Air operated 2-port valve with solenoid valve (coolant control)/high pressure coolant valve	CB-03-1SA
CVSE22-05/10	Air operated 2-port valve for low pressure (coolant valve)/with solenoid valve	CB-03-1SA
CVSE22-16/30	Air operated 2-port valve for medium pressure (coolant valve) /with solenoid valve	CB-03-1SA
CVSE22-70	Air operated 2-port valve for high pressure (coolant valve)/with solenoid valve	CB-03-1SA
CVSE2-70	Air operated 2-port valve for high pressure (coolant valve)/with solenoid valve	CB-03-1SA
CVSE3-35/70	Air operated 3-port valve for medium and high pressure (coolant valve) /With solenoid valve	CB-03-1SA
CXU	Air unit	CB-024SA
D		
D101 to 801-W	Distributor/ For modular F.R.L./Standard White Series	CB-024SA
DB1000	Automatic drain	CB-024SA
DB3000	Automatic drain	CB-024SA
DBS1006	Drain sensor	CB-024SA
DPS	Switch	CB-024SA
DSC	Speed controller with adjusting dial	CB-024SA
DSG	Solenoid valve for gas combustion system	CB-03-1SA
DSG-W	Solenoid valve for gas combustion system	CB-03-1SA
DT3000, 3010-W	Automatic drain	CB-024SA
DT4000, 4010-W	Automatic drain	CB-024SA
DVL	Needle valve with adjusting dial	CB-024SA
E		
E0, ET0	Cylinder switch/heat resistance/2-wire reed	CB-029SA CB-030SA Ending Page 26
EH	Fiber tube clean-room type (For push-in fitting)	CB-024SA
EMB21	Metal-free 2-port solenoid valve	CB-03-1SA
EMB41	Metal-free 2-port solenoid valve	CB-03-1SA
EMB51	Metal-free 2-port solenoid valve	CB-03-1SA
EV2100V, 2109V	Electro pneumatic regulator/solenoid valve vacuum compatible	CB-024SA
EVR	Electro pneumatic regulator/solenoid valve medium flow rate	CB-024SA
EVB*17	Electric vacuum valve	CB-03-1SA
EVD	Digital electro pneumatic regulator	CB-024SA
EVL	Low pressure electro pneumatic regulator	CB-024SA
EVS2	Compact electro pneumatic regulator/solenoid valve	CB-024SA
EXA	Pilot operated 2-port solenoid valve for compressed air	CB-03-1SA

F

F*	Soft nylon tube	CB-024SA
F0V/H	Cylinder switch/1-color LED/ reed 2-wire	CB-029SA CB-030SA Ending Page 22
F1000 to 8000-P6	Air filter/copper and PTFE free series	CB-024SA
F1000 to 8000-W	Air filter/Standard White Series	CB-024SA
F2S, F3S	Cylinder switch/1-color LED/2, 3-wire proximity sensor	CB-029SA CB-030SA Ending Page 22
F2, 3V/H	Cylinder switch/1-color LED/2, 3-wire proximity sensor	CB-029SA CB-030SA Ending Page 22
F3PH/V	Cylinder switch/ PNP output 3-wire proximity sensor	CB-029SA CB-030SA Ending Page 22
F2, 3Y V/H	Cylinder switch/2-color LED/2, 3-wire proximity sensor	CB-029SA CB-030SA Ending Page 22
F3000 to 8000-G4	Air filter/flame-resistant series	CB-024SA
FA*	Miniature fitting/adjustable socket	CB-024SA
FA331 to 831	Exhaust cleaner	CB-024SA
FAB	Direct acting 2-port solenoid valve for compressed air, single unit (Special purpose)	CB-03-1SA
FAC	Clean exhaust filter	CB-024SA
FAG	Direct acting 3-port solenoid valve for compressed air/single unit (Special purpose)	CB-03-1SA
FBS	Miniature fitting/bush	CB-024SA
FBU2	Magnetic spring buffer	CB-024SA
FC*	Miniature fitting/clamp fitting	CB-024SA
FCD	Flat compact cylinder/double acting/single rod	1488
FCD-D	Flat compact cylinder/double acting/double rod	1494
FCD-K	Flat compact cylinder/double acting/cushioned	1500
FCH	Flat compact cylinder/single acting/pull	1480
FCK	Shock absorber/adjustable	CB-030SA 1924
FCM	Compact flow rate controller	CB-024SA
FCS	Flat compact cylinder/single acting/push	1480
FCS1000	Inline clean filter	CB-024SA
FCS500	Inline clean filter	CB-024SA
FGB	Direct acting 2-port solenoid valve for dry air, single unit (Special purpose)	CB-03-1SA
FGB31	Noise reduction special purpose valve (2-port direct acting solenoid valve for compressed air/dry air)	CB-03-1SA
FGB41	Noise reduction special purpose valve (2-port direct acting solenoid valve for compressed air/dry air)	CB-03-1SA
FGG	Direct acting 3-port solenoid valve for dry air, single unit (Special purpose)	CB-03-1SA
FGS	Miniature fitting/gasket	CB-024SA
FH100	Feather hand (mini-parallel hand)	CB-030SA 1590
FH500	Feather hand (mini-fulcrum hand)	CB-030SA 1720
FHB	Direct acting 2-port solenoid valve for hot water/single unit (Special purpose)	CB-03-1SA
FJ	Floating fitting	CB-030SA 1948
FK	Simplified floating fitting	CB-030SA 1956
FLB	Direct acting 2-port solenoid valve for oil/single unit (Special purpose)	CB-03-1SA
FLS	Miniature fitting/extension	CB-024SA
FM*	Miniature fitting/manifold	CB-024SA
FM3000 to 8000	Air filter/medium pressure series	CB-024SA
FMD	Flow rate adjusting valve	CB-03-1SA
FMS	Metering valve with silencer	CB-024SA
FNS	Miniature fitting/double screw nipple	CB-024SA
FPL	Miniature fitting/plug	CB-024SA
FPV	Block valve	CB-024SA
FS*	Miniature fitting/socket	CB-024SA
FSL100	Inline filter	CB-024SA
FSL200	Inline filter	CB-024SA
FSL500	Inline filter	CB-024SA
FSM3	Compact flow rate sensor/integrated display/separated display	CB-024SA
FSM-V	Compact flow rate sensor/ Miniature analog output/switch output	CB-024SA
FSM-V	Miniature flow rate sensor	CB-024SA
FSM-V-D	Separated display	CB-024SA
FSM-VFM	Compact flow rate sensor/inline filter	CB-024SA
FSM-X	Miniature flow rate switch	CB-024SA
FT*	Miniature fitting/barbed fitting	CB-024SA
FVB	Direct acting 2-port solenoid valve for medium vacuum/single unit (Special purpose)	CB-03-1SA

Listed catalog No.

CB-029SA ... Pneumatic Cylinders I
CB-030SA ... Pneumatic Cylinders II
CB-023SA ... Pneumatic Valves
CB-024SA ... Pneumatic, Vacuum and Auxiliary Components
CB-03-1SA ... General Purpose Valves

Codes (pneumatic valves and general purpose valves)

Ⓓ... Discrete valves
Ⓘ... Individual wiring manifolds
Ⓑ... Block manifolds
Ⓡ... Reduced wiring manifolds
Ⓧ... Mix manifolds
Ⓜ... Manifolds

Model No. [index in alphabetical order]

Model No.	Model	Catalog No./page
F		
FWB	Direct acting 2-port solenoid valve for water/single unit (Special purpose)	CB-03-1SA
FWB31	Noise reduction special purpose valve (direct acting 2-port solenoid valve for water)	CB-03-1SA
FWB41	Noise reduction special purpose valve (direct acting 2-port solenoid valve for water)	CB-03-1SA
FWD	Compact pilot operated solenoid valve for water	CB-03-1SA
FWG	Direct acting 3-port solenoid valve for water, single unit (Special purpose)	CB-03-1SA
FWS	Miniature fitting/bulkhead	CB-024SA
FW4000, 8000	Air filter Outdoor Series	CB-024SA
FX	Drain separator	CB-024SA
G		
G29D	Miniature pressure gauge	CB-024SA
G39D	Round pressure gauge	CB-024SA
G401-W	Low-profile pressure gauge	CB-024SA
G40D	Pressure gauge with safety marker	CB-024SA
G45D	Pressure gauge with limit marker	CB-024SA
G49D, 59D	General-use pressure gauge	CB-024SA
G49D, 59D-P6	Pressure gauge/copper and PTFE free series	CB-024SA
G49D, G59D-P70, P9*	General purpose pressure gauge for clean room	CB-024SA
G52D	Pressure gauge with switch	CB-024SA
G53D	Pressure gauge for panel mounting	CB-024SA
GA400	Differential pressure gauge	CB-024SA
GAB312	Direct acting 2-port solenoid valve, manifold/actuator (General purpose)	CB-03-1SA
GAB312-Z	Direct acting 2-port solenoid valve for dry air, manifold/actuator (General purpose)	CB-03-1SA
GAB352	Direct acting 2-port solenoid valve, manifold/actuator (General purpose)	CB-03-1SA
GAB352-Z	Direct acting 2-port solenoid valve for dry air, manifold/actuator (General purpose)	CB-03-1SA
GAB412	Direct acting 2-port solenoid valve, manifold/actuator (General purpose)	CB-03-1SA
GAB412-Z	Direct acting 2-port solenoid valve for dry air, manifold/actuator (General purpose)	CB-03-1SA
GAB422	Direct acting 2-port solenoid valve, manifold/actuator (General purpose)	CB-03-1SA
GAB452	Direct acting 2-port solenoid valve, manifold/actuator (General purpose)	CB-03-1SA
GAB452-Z	Direct acting 2-port solenoid valve for dry air, manifold/actuator (General purpose)	CB-03-1SA
GAG31*	Direct acting 3-port solenoid valve, manifold/actuator (General purpose)	CB-03-1SA
GAG31*-Z	Direct acting 3-port solenoid valve for dry air, manifold/actuator (General purpose)	CB-03-1SA
GAG33*	Direct acting 3-port solenoid valve, manifold/actuator (General purpose)	CB-03-1SA
GAG33*-Z	Direct acting 3-port solenoid valve for dry air, manifold/actuator (General purpose)	CB-03-1SA
GAG34*	Direct acting 3-port solenoid valve, actuator (General purpose)	CB-03-1SA
GAG34*-Z	Direct acting 3-port solenoid valve for dry air, actuator (General purpose)	CB-03-1SA
GAG35*	Direct acting 3-port solenoid valve, manifold/actuator (General purpose)	CB-03-1SA
GAG35*-Z	Direct acting 3-port solenoid valve for dry air, manifold/actuator (General purpose)	CB-03-1SA
GAG41*	Direct acting 3-port solenoid valve, manifold/actuator (General purpose)	CB-03-1SA
GAG41*-Z	Direct acting 3-port solenoid valve for dry air, manifold/actuator (General purpose)	CB-03-1SA
GAG43*	Direct acting 3-port solenoid valve, manifold/actuator (General purpose)	CB-03-1SA
GAG43*-Z	Direct acting 3-port solenoid valve for dry air, manifold/actuator (General purpose)	CB-03-1SA
GAG44*	Direct acting 3-port solenoid valve, actuator (General purpose)	CB-03-1SA
GAG44*-Z	Direct acting 3-port solenoid valve for dry air, actuator (General purpose)	CB-03-1SA
GAG45*	Direct acting 3-port solenoid valve, manifold/actuator (General purpose)	CB-03-1SA
GAG45*-Z	Direct acting 3-port solenoid valve for dry air, manifold/actuator (General purpose)	CB-03-1SA
GAMD3R**	Air operated valve for chemical liquids (Manifold/branch valve)	CB-03-1SA
GASB	Ball valve for automatic emergency shutdown	CB-03-1SA
GAV	Low pressure gas combination valve	CB-03-1SA
GCVE2	Modular coolant valve/air operated	CB-03-1SA
GCVSE2	Modular coolant valve/with solenoid valve	CB-03-1SA
GEXA	Pilot operated 2-port solenoid valve for compressed air/push-in fitting manifold	CB-03-1SA
GFAB	Direct acting 2-port solenoid valve for compressed air, manifold (Special purpose)	CB-03-1SA

GFAG	Direct acting 3-port solenoid valve for compressed air, manifold (Special purpose)	CB-03-1SA
GFGB	Direct acting 2-port solenoid valve for dry air, manifold (Special purpose)	CB-03-1SA
GFGG	Direct acting 3-port solenoid valve for dry air, manifold (Special purpose)	CB-03-1SA
GFLB	Direct acting 2-port solenoid valve for oil, manifold (Special purpose)	CB-03-1SA
GFM	Glass float module	CB-024SA
GFVB	Direct acting 2-port solenoid valve for medium vacuum, manifold (Special purpose)	CB-03-1SA
GFWB	Direct acting 2-port solenoid valve for water, manifold (Special purpose)	CB-03-1SA
GFWG	Direct acting 3-port solenoid valve for water, manifold (Special purpose)	CB-03-1SA
GHV	Gas combination valve	CB-03-1SA
GLC	Guideless cylinder/double acting	CB-030SA 1198
GMF1	Ⓘ Pilot operated 5-port ISO valve/ DIN terminal box/ISO size (1)	CB-023SA
GMF1	Ⓘ Pilot operated 5-port ISO valve/I/O connector/ISO size (1)	CB-023SA
GMF2	Ⓘ Pilot operated 5-port ISO valve/ DIN terminal box/ISO size (2)	CB-023SA
GMF2	Ⓘ Pilot operated 5-port ISO valve/I/O connector/ISO size (2)	CB-023SA
GMFZ	Ⓧ Pilot operated 5-port ISO valve/ DIN terminal box/ISO size (1)/(2)	CB-023SA
GMFZ	Ⓧ Pilot operated 5-port ISO valve/ I/O connector /ISO size (1)/(2)	CB-023SA
GNAB*	Air operated 2-port valve, manifold (Compact cylinder valve)	CB-03-1SA
GNAB*V	Air operated 2-port valve for low vacuum, manifold (Compact cylinder valve)	CB-03-1SA
GNAD*	Diaphragm cylinder valve, manifold	CB-03-1SA
GNAD*V	Diaphragm cylinder valve for low vacuum, manifold	CB-03-1SA
GPS2	Contact confirmation switch/single unit	CB-024SA
GPS3	Digital gap switch/single unit	CB-024SA
GRC	Table rotary actuator/ Basic	CB-030SA 1302
GRC-F	Table rotary actuator/ fine speed	CB-030SA 1316
GRC-K	Table rotary actuator/ High accuracy	CB-030SA 1302
GRC-KF	Table rotary actuator/ High accuracy/fine speed	CB-030SA 1316
GSV	Solenoid valve for automatic watering control	CB-03-1SA
GSV2	Solenoid valve for automatic watering control	CB-03-1SA
GT9000	Refrigeration air dryer/Air cooling/ large standard inlet air (40°C) type	CB-024SA
GT9000W	Refrigeration air dryer/Water cooling/ large standard inlet air (40°C) type	CB-024SA
GT9000WV2	Refrigeration air dryer/Inverter-controlled water cooling, large standard inlet air (40°C) type	CB-024SA
GW49D	Outdoor-use pressure gauge	CB-024SA
GWC*	Fitting/cap	CB-024SA
GWCR*	Fitting/cross	CB-024SA
GWFY*	Fitting/FY	CB-024SA
GWJL*	Mini fitting/elbow	CB-024SA
GWJP*	Mini fitting/plug	CB-024SA
GWJS*	Mini fitting/straight	CB-024SA
GWJT*	Mini fitting/tee	CB-024SA
GWJY*	Mini fitting/Y tee	CB-024SA
GWL*	Fitting/elbow	CB-024SA
GWM*	Fitting/for tightening fitting	CB-024SA
GWMF*	Fitting/manifold	CB-024SA
GWP*-0	Fitting/connecting plug	CB-024SA
GWP*-B	Fitting/blanking plug	CB-024SA
GWP*-L	Fitting/L type plug	CB-024SA
GWS*	Fitting/straight	CB-024SA
GWT*	Fitting/tee	CB-024SA
GWTR*	Fitting/tetrapod	CB-024SA
GWWY*	Fitting/double Y	CB-024SA
GWY*	Fitting/Y tee	CB-024SA
GX3200D	Refrigeration air dryer/Compact for mounting on equipment/standard inlet air (35°C)	CB-024SA
GX5200D	Refrigeration air dryer/Compact for direct compressor connection/high temperature inlet air (55°C)	CB-024SA

Listed catalog No.

CB-029SA ... Pneumatic Cylinders Ⅰ
CB-030SA ... Pneumatic Cylinders Ⅱ
CB-023SA ... Pneumatic Valves
CB-024SA ... Pneumatic, Vacuum and Auxiliary Components
CB-03-1SA ... General Purpose Valves

Codes (pneumatic valves and general purpose valves)

Ⓓ... Discrete valves
Ⓘ... Individual wiring manifolds
Ⓑ... Block manifolds
Ⓡ... Reduced wiring manifolds
Ⓧ... Mix manifolds
Ⓜ... Manifolds

Model No. [index in alphabetical order]

Model No.	Model	Catalog No./page
H		
H0	Cylinder switch/1-color LED/ reed	CB-029SA CB-030SA Ending Page 24
H0Y	Cylinder switch/2-color LED/ reed	CB-029SA CB-030SA Ending Page 24
HAP-1C	Parallel hand	CB-030SA 1628
HAP-2 to 4CS	Parallel hand	CB-030SA 1630
HB	High corrosion resistant direct acting 2-port solenoid valve	CB-03-1SA
HBL	Fulcrum hand	CB-030SA 1726
HCA	High speed cylinder/double acting/single rod	CB-030SA 978
HCM	High energy absorption cylinder/double acting/single rod	CB-030SA 960
HCP	Lateral parallel hand	CB-030SA 1642
HD-0.5 to 9	Desiccant air dryer/compact heat-less dryer	CB-024SA
HDL	Wide angle hand	CB-030SA 1744
HFP	Wide parallel hand	CB-030SA 1714
HGP	Long stroke parallel hand	CB-030SA 1648
HJL	Toggle hand	CB-030SA 1732
HK1	Motorized valve for gas combustion system	CB-03-1SA
HKP	Cross roller parallel hand	CB-030SA 1636
HLA	Thin parallel hand	CB-030SA 1662
HLAG	Rubber covered thin parallel hand	CB-030SA 1670
HLB	Thin parallel hand	CB-030SA 1662
HLBG	Rubber covered thin parallel hand	CB-030SA 1670
HLC	Thin long stroke parallel hand	CB-030SA 1678
HLD	Ultra thin parallel hand	CB-030SA 1686
HLF2	Low-profile long stroke hand	CB-030SA 1652
HMD	Thin wide angle hand	CB-030SA 1738
HMF	Compact wide parallel hand	CB-030SA 1690
HMF-G	Coolant proof specifications compact wide parallel hand	CB-030SA 1700
HMFB	LM guided large wide parallel hand	CB-030SA 1708
HMTB1	Compact metal-free lever 2-port solenoid valve for medical equipment	CB-03-1SA
HMTG1	Compact metal-free lever 3-port solenoid valve for medical equipment	CB-03-1SA
HMV	Ⓓ Manual selector valve/miniature	CB-023SA
HNB1	Compact direct acting 2-port solenoid valve	CB-03-1SA
HNG1	Compact direct acting 3-port solenoid valve	CB-03-1SA
HPS	Close contact confirmation switch/single unit	CB-024SA
HPV	Manual pinch valve	CB-03-1SA
HRL-1	Hybrid robot/Pneumatic robot element/single axis unit	CB-030SA 1452
HS	Motorized valve for gas combustion system	CB-03-1SA
HSV	Ⓓ Manual selector valve/standard	CB-023SA
HVB112	Solenoid valve for high vacuum	CB-03-1SA
HVB212	Solenoid valve for high vacuum	CB-03-1SA
HVB312	Solenoid valve for high vacuum	CB-03-1SA
HVB412	Solenoid valve for high vacuum	CB-03-1SA
HVB512	Solenoid valve for high vacuum	CB-03-1SA
HVB612	Solenoid valve for high vacuum	CB-03-1SA
HVB712	Solenoid valve for high vacuum	CB-03-1SA
HVL12	Delay vacuum solenoid valve	CB-03-1SA
HYN	Direct acting 2, 3-port valve (pinch valve for high purity fluids)	CB-03-1SA
I		
IAGD5	Integrated gas supply system	CB-03-1SA
J		
J100 to 800-W	Joiner/for rotary modular F.R.L./Standard White Series	CB-024SA
JL	Fitting (elbow fitting)	CB-024SA
JSB3	Brake unit	CB-030SA 936
JSC3 (-N) JSC4 (-N)	Brake cylinder (medium and large bore size)/double acting/single rod	CB-030SA 774
JSC3-H JSC4-H	Brake cylinder (medium and large bore size)/double acting/low hydraulic	CB-030SA 818
JSC3-P12	Brake cylinder (oil-prohibited)	CB-029SA CB-030SA Ending Page 132
JSC3-T JSC4-T	Brake cylinder (medium and large bore size)/double acting/heat resistance	CB-030SA 830
JSC3-V	Brake cylinder (medium bore size) /With valve for brake/double acting	CB-030SA 810
JSG	Tie rod cylinder with brake/ double acting/single rod	CB-030SA 742
JSG-V	Tie rod cylinder with brake/double acting/ with valve for brake release	CB-030SA 742
JSK2	Brake cylinder (small bore size ø20 to 40/ caulking)/double acting	CB-030SA 706
JSK2-V	Brake cylinder (small bore size ø20 to 40/ caulking)/With valve/double acting	CB-030SA 706
JSM2	Brake cylinder (small bore size ø20 to 40/ disassembling)/double acting	CB-030SA 720
JSM2-V	Brake cylinder (small bore size ø20 to 40/ disassembling)/With valve/double acting	CB-030SA 720

K

K-005	Filter/for air sensor	CB-024SA	
K0V/H	Cylinder switch/1-color LED/ 2-wire reed	CB-029SA CB-030SA Ending Page 20	
K2, 3V/H	Cylinder switch/1-color LED, 2, 3-wire proximity	CB-029SA CB-030SA Ending Page 20	
K2, 3Y V/H	Cylinder switch/2-color LED, 2, 3-wire proximity	CB-029SA CB-030SA Ending Page 20	
K3P V/H	Cylinder switch/PNP output/ 3-wire proximity sensor	CB-029SA CB-030SA Ending Page 20	
K5V/H	Cylinder switch/Without display/reed 2-wire	CB-029SA CB-030SA Ending Page 20	
K60570	F.R.L. kit	CB-024SA	
KML50	Fine level switch	CB-03-1SA	
KML60	Fine level switch	CB-03-1SA	
KML703	Fine level switch	CB-03-1SA	
KX	Coiling tube	CB-024SA	
KZV3	Pilot operated 2-port solenoid valve	CB-03-1SA	

L

L1000 to 8000-P6	Lubricator/copper and PTFE free series	CB-024SA	
L1000 to 8000-W	Lubricator/Standard White Series	CB-024SA	
LAD*	Diaphragm cylinder valve	CB-03-1SA	
LBC	Air bearing actuator	CB-030SA	998
LCG	Linear slide cylinder/ Double acting/single rod	CB-030SA	140
LCG-P7*	Linear slide cylinder/ Double acting/clean-room specifications	CB-030SA	172
LCG-Q	Linear slide cylinder/ Double acting/position locking	CB-030SA	164
LCM	Linear slide cylinder/ Double acting/single rod	CB-030SA	10
LCM-A	Linear slide cylinder/ Double acting/side mounting	CB-030SA	30
LCM-P	Linear slide cylinder/ Double acting stroke adjustable push type	CB-030SA	18
LCM-P73	Linear slide cylinder/ Double acting/clean-room specifications	CB-030SA	40
LCM-R	Linear slide cylinder/Double acting/ stroke adjustable/push-pull type	CB-030SA	24
LCR	Linear slide cylinder/ Double acting/single rod	CB-030SA	58
LCR-F	Linear slide cylinder/ Double acting/fine speed	CB-030SA	112
LCR-F-P7*	Linear slide cylinder/Double acting/ fine speed/clean-room specifications	CB-030SA	118
LCR-P7*	Linear slide cylinder/Double acting/ single rod/clean-room specifications	CB-030SA	94
LCR-Q	Linear slide cylinder/ Double acting/position locking	CB-030SA	84
LCW	Linear slide cylinder/ Double acting/single rod	CB-030SA	204
LCW-Q	Linear slide cylinder/ Double acting/position locking	CB-030SA	224
LCX	Linear slide cylinder/ Double acting/single rod	CB-030SA	254
LCX-*L	Linear slide cylinder/Double acting/ single rod/long stroke	CB-030SA	276
LCX-*L-P7*	Linear slide cylinder/Double acting/single rod/ clean-room specifications/long stroke	CB-030SA	292
LCX-P7*	Linear slide cylinder/Double acting/ single rod/clean-room specifications	CB-030SA	270
LCX-Q	Linear slide cylinder/ Double acting/position locking	CB-030SA	264
LCX-Q-*L	Linear slide cylinder/Double acting/ position locking/long stroke	CB-030SA	286
LFC-KL	Lifter cylinder	CB-029SA CB-030SA Ending Page 131	
LGD**	Air operated valve for process gas	CB-03-1SA	
LGD*0	Manual valve for process gas	CB-03-1SA	
LHA	Linear guide hand	CB-030SA	1612
LHAG	Linear guide hand with rubber cover	CB-030SA	1620
LMB	Linear guide lock	CB-030SA	942
LML	Linear guide lock	CB-030SA	947
LN	Cylinder with length measuring sensor/sensor/amplifier/display	CB-030SA	1465
LSH	Linear Slide Hand	CB-030SA	1581
LSH-HP1	Linear Slide Hand	CB-030SA	1512

■ Listed catalog No.

CB-029SA ... Pneumatic Cylinders Ⅰ
CB-030SA ... Pneumatic Cylinders Ⅱ
CB-023SA ... Pneumatic Valves
CB-024SA ... Pneumatic, Vacuum and Auxiliary Components
CB-03-1SA ... General Purpose Valves

■ Codes (pneumatic valves and general purpose valves)

Ⓓ... Discrete valves
Ⓘ... Individual wiring manifolds
Ⓑ... Block manifolds
Ⓡ... Reduced wiring manifolds
Ⓧ... Mix manifolds
Ⓜ... Manifolds

Model No. [index in alphabetical order]

Model No.	Model	Catalog No./page
L		
LSHL-HP1	Linear Slide Hand	CB-030SA 1532
LSHM-HP2	Linear Slide Hand with Length Measuring Function	CB-030SA 1546
LW4000/LW8000	Lubricator Outdoor Series	CB-024SA
M		
M0V/H	Cylinder switch/	CB-029SA
	1-color LED/2-wire reed	CB-030SA Ending Page 12
M1000 to 8000-P6	Oil mist filter/	
	Copper and PTFE free Series	CB-024SA
M1000 to 8000-W	Oil mist filter/	
	Standard White Series	CB-024SA
M2, 3V/H	Cylinder switch/	CB-029SA
	1-color LED, 2, 3-wire proximity	CB-030SA Ending Page 12
M2, 3WV	Cylinder switch/	CB-029SA
	2-color LED, 2, 3-wire proximity	CB-030SA Ending Page 12
M3GA1/2/3	Ⓘ Pilot operated 3-port valve/	
	body piping	CB-023SA
M3GA1/2/3	Ⓜ Pilot operated 3-port valve	
	(master valve)/body piping	CB-023SA
M3GA1/2/3-T*(D)	Ⓡ Pilot operated 3-port valve	
	Body piping	CB-023SA
M3GB1/2	Ⓘ Pilot operated two 3-port	
	valves integrated/base piping	CB-023SA
M3GB1/2-T* (D)	Ⓡ Pilot operated two 3-port	
	valves integrated/base piping	CB-023SA
M3GD1/2/3	Ⓘ Pilot operated 3-port valve/	
	body piping	CB-023SA
M3GD1/2/3-T*(D)	Ⓡ Pilot operated 3-port valve	
	Body piping	CB-023SA
M3GD1/2*0EJ	Ⓘ Intrinsically safe explosion-proof	
	pilot operated 3-port valve/body piping	CB-023SA
M3GE1/2	Ⓘ Pilot operated two 3-port	
	valves integrated/base piping	CB-023SA
M3GE1/2-T* (D)	Ⓡ Pilot operated two 3-port	
	valves integrated/base piping	CB-023SA
M3GE1/2*0EJ	Ⓘ Intrinsically safe explosion-proof	
	pilot operated 3-port valve/base piping	CB-023SA
M3KA1	Ⓘ Pilot operated 3-port valve	
	Body piping	CB-023SA
M3KA1	Ⓜ Pilot operated 3-port valve	
	(master valve)/body piping	CB-023SA
M3MA0	Ⓘ Direct acting 3-port valve/	
	Body piping	CB-023SA
M3MB0	Ⓘ Direct acting 3-port valve/	
	Sub-plate piping	CB-023SA
M3P V/H	Cylinder switch/1-color LED/	CB-029SA
	PNP output/3-wire proximity sensor	CB-030SA Ending Page 12
M3PA1/2	Ⓘ Direct acting 3-port valve/	
	Body piping	CB-023SA
M3PB1/2	Ⓘ Direct acting 3-port valve/	
	Sub-plate piping	CB-023SA
M3QB1	Ⓘ Direct acting 3-port valve/	
	Sub-plate piping	CB-023SA
M3QE1	Ⓘ Direct acting 3-port valve/	
	Sub-plate piping	CB-023SA
M3QZ1	Ⓘ Direct acting 3-port valve/	
	Sub-plate piping	CB-023SA
M3QRA	Ⓘ Direct acting 3-port valve/	
	Body piping	CB-023SA
M3QRB	Ⓘ Direct acting 3-port valve/	
	Sub-plate piping	CB-023SA
M4F0/1/2/3	Ⓘ Pilot operated 5-port valve/	
	Body piping	CB-023SA
M4F0/1/2/3	Ⓜ Pilot operated 5-port valve	
	(master valve)/body piping	CB-023SA
M4F30EX**	Ⓘ Explosion-proof pilot operated	
	5-port valve/body piping	CB-023SA
M4F3*0E	Ⓘ Explosion-proof pilot operated	
	5-port valve/body piping	CB-023SA
M4F4/5/6/7	Ⓘ Pilot operated 5-port valve/	
	sub-plate piping	CB-023SA
M4F4/5/6/7	Ⓜ Pilot operated 5-port valve	
	(master valve)/sub-plate piping	CB-023SA
M4F4/5/6/7*0EX	Ⓘ Explosion-proof pilot operated	
	5-port valve/sub-plate piping	CB-023SA
M4F4/5/6/7*0E	Ⓘ Explosion-proof pilot operated	
	5-port valve/sub-plate piping	CB-023SA
M4GA1/2/3	Ⓘ Pilot operated 5-port valve/	
	body piping	CB-023SA
M4GA1/2/3	Ⓜ Pilot operated 5-port valve	
	(master valve)/body piping	CB-023SA
M4GA1/2/3-T*(D)	Ⓡ Pilot operated 5-port valve/	
	body piping	CB-023SA
M4GA4	Ⓘ Pilot operated 5-port valve/	
	body piping	CB-023SA
M4GA4-T*	Ⓡ Pilot operated 5-port valve/	
	body piping	CB-023SA

M4GA4-T6 (D)	Ⓡ Pilot operated 5-port valve (serial transmission)/body piping	CB-023SA
M4GB1/2/3	Ⓘ Pilot operated 5-port valve/ base piping	CB-023SA
M4GB1/2/3	Ⓜ Pilot operated 5-port valve (master valve)/base piping	CB-023SA
M4GB1/2/3-T* (D)	Ⓡ Pilot operated 5-port valve base piping	CB-023SA
M4GB4	Ⓘ Pilot operated 5-port valve/ base piping	CB-023SA
M4GB4-T*	Ⓡ Pilot operated 5-port valve base piping	CB-023SA
M4GB4-T6 (D)	Ⓡ Pilot operated 5-port valve (serial transmission)/base piping	CB-023SA
M4GD1/2/3	Ⓜ Pilot operated 5-port valve (master valve)/body piping	CB-023SA
M4GD1/2/3-T*(D)	Ⓡ Pilot operated 5-port valve/ body piping	CB-023SA
M4GD1/2/3/4*0EJ	Ⓘ Intrinsically safe explosion-proof pilot operated 5-port valve/body piping	CB-023SA
M4GE1/2/3	Ⓘ Pilot operated 5-port valve/ base piping	CB-023SA
M4GE1/2/3-T* (D)	Ⓡ Pilot operated 5-port valve base piping	CB-023SA
M4GE1/2/3/4*0EJ	Ⓘ Intrinsically safe explosion-proof pilot operated 5-port valve/base piping	CB-023SA
M4KA1/2/3/4	Ⓘ Pilot operated 5-port valve/ body piping	CB-023SA
M4KA1/2/3/4	Ⓜ Pilot operated 5-port valve (master valve)/body piping	CB-023SA
M4KB1/2/3/4	Ⓘ Pilot operated 4, 5-port valve/sub-plate piping	CB-023SA
M4KB1/2/3/4	Ⓜ Pilot operated 4, 5-port valve (master valve)/sub-plate piping	CB-023SA
M4SA0	Ⓘ Pilot operated 5-port valve/ body piping	CB-023SA
M4SB0	Ⓘ Pilot operated 5-port valve/ sub-plate piping	CB-023SA
M4SB0	Ⓡ Pilot operated 5-port valve/ sub-plate piping	CB-023SA

M512*	Ⓓ Pilot operated 2-port valve/ direct mounting	CB-023SA	
M513*	Ⓓ Pilot operated 3-port valve/ direct mounting	CB-023SA	
M5V/H	Cylinder switch/ Without display/reed 2-wire	CB-029SA CB-030SA	Ending Page 12
MAB1	Metal-free 2-port solenoid valve	CB-03-1SA	
MAG1	Metal-free 3-port solenoid valve	CB-03-1SA	
MAVL	Large mechanical valve/detector	CB-024SA	
MCP	Mechanical power cylinder	CB-030SA	1180
MD	Multi-monitors	CB-024SA	
MDC2	Compact direct mounting cylinder/double acting/single rod		1348
MDC2-F	Compact direct mounting cylinder/double acting/fine speed		1364
MDC2-X	Compact direct mounting cylinder/single acting/push		1354
MDC2-Y	Compact direct mounting cylinder/single acting/pull		1354
MDV	Compact direct mounting cylinder	CB-029SA CB-030SA	Ending Page 130
MEB2	Metal-free 2-port solenoid valve	CB-03-1SA	
MEG2	Metal-free 3-port solenoid valve	CB-03-1SA	
MEVT	Thin electro pneumatic regulator/ Reduced wiring manifold	CB-024SA	
MFC	Robot cylinder/double acting/single rod	CB-030SA	1218
MFC-B	Robot cylinder/double acting/with brake	CB-030SA	1226
MFC-BK	Robot cylinder/ Double acting/with brake/high load	CB-030SA	1226
MFC-BS	Robot cylinder/ Double acting/with brake sensor	CB-030SA	1236
MFC-BSK	Robot cylinder/ Double acting/with brake sensor/high load	CB-030SA	1236
MFC-K	Robot cylinder/double acting/high load	CB-030SA	1218
MGD10/20R	Manual valve for process gas	CB-03-1SA	
MGPS2	Contact confirmation switch/manifold	CB-024SA	
MGPS3	Digital gap switch/manifold	CB-024SA	
MHB4	Miniature motorized 2-port ball valve (motor valve)	CB-03-1SA	
MHG4	Miniature motorized 3-port ball valve (motor valve)	CB-03-1SA	
MHPS	Close contact confirmation switch manifold	CB-024SA	

Listed catalog No.

CB-029SA ... Pneumatic Cylinders I
CB-030SA ... Pneumatic Cylinders II
CB-023SA ... Pneumatic Valves
CB-024SA ... Pneumatic, Vacuum and Auxiliary Components
CB-03-1SA ... General Purpose Valves

Codes (pneumatic valves and general purpose valves)

Ⓓ... Discrete valves
Ⓘ... Individual wiring manifolds
Ⓑ... Block manifolds
Ⓡ... Reduced wiring manifolds
Ⓧ... Mix manifolds
Ⓜ... Manifolds

Model No. [index in alphabetical order]

Model No.	Model	Catalog No./page
M		
MJB3	Metal-free direct acting 2-port solenoid valve	CB-03-1SA
MJL*	Tightening fitting/elbow	CB-024SA
MJN*	Tightening fitting/sleeve	CB-024SA
MJS*	Tightening fitting/straight	CB-024SA
MJT*	Tightening fitting/tee	CB-024SA
MJU*	Tightening fitting/insert ring	CB-024SA
MKB3	Metal-free 2-port solenoid valve	CB-03-1SA
MM	Medium mechanical valve/detector	CB-024SA
MM3000 to 8000	Oil mist filter/medium pressure series	CB-024SA
MMD*03RN	Manual valve for chemical liquids	CB-03-1SA
MN3E0	Ⓡ Pilot operated 3, 4-port valve	CB-023SA
MN3E00	Ⓡ Pilot operated 3, 4-port valve	CB-023SA
MN3EX0	Ⓡ/Ⓧ Pilot operated 3-port valve	CB-023SA
MN3GA1/2	Ⓘ/Ⓑ Pilot operated 3-port valve/body piping	CB-023SA
MN3GA1/2-T*	Ⓘ/Ⓑ Pilot operated 3-port valve/body piping	CB-023SA
MN3GAX12	Ⓡ/Ⓧ Pilot operated 3-port valve/body piping	CB-023SA
MN3GB1/2	Ⓘ/Ⓑ Pilot operated two 3-port valves integrated/base piping	CB-023SA
MN3GB1/2-T*	Ⓡ/Ⓑ Pilot operated two 3-port valves integrated/base piping	CB-023SA
MN3GD1/2	Ⓘ/Ⓑ Pilot operated 3-port valve/body piping	CB-023SA
MN3GD1/2-T*	Ⓘ/Ⓑ Pilot operated 3-port valve/body piping	CB-023SA
MN3GDX12	Ⓡ/Ⓧ Pilot operated 3-port valve/body piping	CB-023SA
MN3GE1/2	Ⓘ/Ⓑ Pilot operated two 3-port valves integrated/base piping	CB-023SA
MN3GE1/2-T*	Ⓡ/Ⓑ Pilot operated two 3-port valves integrated/base piping	CB-023SA
MN3S0	Ⓡ Pilot operated 3-port valve/ (reduced wiring valve)	CB-023SA
MN3S0	Ⓡ Pilot operated 3-port valve/(reduced wiring valve)/two 3-port valves integrated	CB-023SA
MN4E0	Ⓡ Pilot operated 3, 4-port valve	CB-023SA
MN4E00	Ⓡ Pilot operated 3, 4-port valve	CB-023SA
MN4EX0	Ⓡ/Ⓧ Pilot operated 4-port valve	CB-023SA
MN4GA1/2	Ⓘ/Ⓑ Pilot operated 5-port valve/body piping	CB-023SA
MN4GA1/2-T*	Ⓡ/Ⓑ Pilot operated 5-port valve/body piping	CB-023SA
MN4GAX12	Ⓡ/Ⓧ Pilot operated 5-port valve/body piping	CB-023SA
MN4GB1/2	Ⓘ/Ⓑ Pilot operated 5-port valve/base piping	CB-023SA
MN4GB1/2-T*	Ⓡ/Ⓑ Pilot operated 5-port valve/base piping	CB-023SA
MN4GBX12	Ⓡ/Ⓧ Pilot operated 5-port valve/base piping	CB-023SA
MN4GD1/2	Ⓘ/Ⓑ Pilot operated 5-port valve/body piping	CB-023SA
MN4GD1/2-T*	Ⓡ/Ⓑ Pilot operated 5-port valve/body piping	CB-023SA
MN4GDX12	Ⓡ/Ⓧ Pilot operated 5-port valve/body piping	CB-023SA
MN4GE1/2	Ⓘ/Ⓑ Pilot operated 5-port valve/base piping	CB-023SA
MN4GE1/2-T*	Ⓡ/Ⓑ Pilot operated 5-port valve/base piping	CB-023SA
MN4GEX12	Ⓡ/Ⓧ Pilot operated 5-port valve/base piping	CB-023SA
MN4KB1/2	Ⓑ Pilot operated 5-port valve/ sub-plate piping	CB-023SA
MN4S0	Ⓡ Pilot operated 4-port valve/ (reduced wiring valve)	CB-023SA
MNRB500	Block manifold regulator	CB-024SA
MNRJB500	Block manifold Compact direct acting precision regulator	CB-024SA
MR10R	Compact metal-free 2, 3-port solenoid valve	CB-03-1SA
MR16	Compact metal-free 2, 3-port solenoid valve	CB-03-1SA
MRG2	Magnet rodless cylinder/ double acting	1766
MRL2	Magnet rodless cylinder/basic	1740
MRL2-F	Magnet rodless cylinder/fine speed	1740
MRL2-G	Magnet rodless cylinder/ simplified guide 1-piston	1740
MRL2-GF	Magnet rodless cylinder/simplified guide 1-piston/fine speed	1740

MRL2-W	Magnet rodless cylinder/ simplified guide 2-piston	1740
MRL2-WF	Magnet rodless cylinder/simplified guide 2-piston/fine speed	1740
MS	Compact mechanical valve/detector	CB-024SA
MSB1	Motor driven 2-port ball valve for steam (motor valve)	CB-03-1SA
MSB1D	Motor driven 2-port ball valve with relay for steam (motor valve)	CB-03-1SA
MSB1DF	Motor driven 2-port ball valve with relay for steam (motor valve)/full bore	CB-03-1SA
MSB1F	Motor driven 2-port ball valve for steam (motor valve)/full bore	CB-03-1SA
MSD	Small compact cylinder/ Double acting/single rod	1422
MSD-F	Small compact cylinder/ Double acting/single rod/fine speed	1450
MSDG-L	Small compact cylinder/ Double acting/guided/with switch	1452
MSDG-LF	Small compact cylinder/ Double acting/guided/with switch/fine speed	1462
MSD-K	Small compact cylinder/ Double acting/high load	1440
MSD-KF	Small compact cylinder/ Double acting/high load/fine speed	1450
MSD-X	Small compact cylinder/ Single acting/push	1430
MSD-Y	Small compact cylinder/ Single acting/pull	1430
MT3S0	Ⓡ Pilot operated 3-port valve/ (reduced wiring valve)	CB-023SA
MT3S0	Ⓡ Pilot operated 3-port valve (Reduced wiring valve) Two 3-port valves integrated	CB-023SA
MT4S0	Ⓡ Pilot operated 4-port valve/ (reduced wiring valve)	CB-023SA
MTLPS	Cutting tool breakage detection switch/ Manifold	CB-024SA
MV3QRA	3QR negative pressure switching unit Body piping	CB-023SA
MV3QRB	3QR negative pressure switching unit Sub-plate piping	CB-023SA
MVB*0	Manual valve for high vacuum	CB-03-1SA
MVB*17	Manual valve for high vacuum	CB-03-1SA
MVC	Compact cylinder with suction pad/ Double acting/single rod	1374
MVP*0	Manual valve for high vacuum	CB-03-1SA
MW3GA2	Ⓡ Pilot operated 3-port valve/ body piping	CB-023SA
MW3GA2-R1	Ⓘ Pilot operated 3-port valve/ body piping	CB-023SA
MW4GA2	Ⓡ Pilot operated 5-port valve/ body piping	CB-023SA
MW4GA2-R1	Ⓘ Pilot operated 5-port valve/ body piping	CB-023SA
MW4GB2	Ⓡ Pilot operated 5-port valve/ base side piping	CB-023SA
MW4GB2-R1	Ⓘ Pilot operated 5-port valve/ base side piping	CB-023SA
MW4GB4-R1	Ⓘ Pilot operated 5-port valve/ base side piping	CB-023SA
MW4GB4-T1/6	Ⓡ Pilot operated 5-port valve/ base side piping	CB-023SA
MW4GZ2	Ⓡ Pilot operated 5-port valve/ base bottom piping	CB-023SA
MW4GZ2-R1	Ⓘ Pilot operated 5-port valve/ base bottom piping	CB-023SA
MW4GZ4-R1	Ⓘ Pilot operated 5-port valve/ base bottom piping	CB-023SA
MW4GZ4-T1/6	Ⓡ Pilot operated 5-port valve/ base bottom piping	CB-023SA
MW4000, 8000	Oil mist filter Outdoor Series	CB-024SA
MWD	Weir diaphragm valve	CB-03-1SA
MX1000 to 8000-W	High performance oil mist filter Standard White Series	CB-024SA
MXB1	Motor driven 2-port ball valve (motor valve)	CB-03-1SA
MXB1D	Motor driven 2-port ball valve with relay (motor valve)	CB-03-1SA
MXB1DF	Motor driven 2-port ball valve with relay (motor valve)/full bore	CB-03-1SA

Listed catalog No.

CB-029SA ... Pneumatic Cylinders I
CB-030SA ... Pneumatic Cylinders II
CB-023SA ... Pneumatic Valves
CB-024SA ... Pneumatic, Vacuum and Auxiliary Components
CB-03-1SA ... General Purpose Valves

Codes (pneumatic valves and general purpose valves)

Ⓓ... Discrete valves
Ⓘ... Individual wiring manifolds
Ⓑ... Block manifolds
Ⓡ... Reduced wiring manifolds
Ⓧ... Mix manifolds
Ⓜ... Manifolds

Model No. [index in alphabetical order]

Model No.	Model	Catalog No./page
M		
MXB1D-N	Motor driven oil-prohibited 2-port ball valve (motor valve)	CB-03-1SA
MXB1F	Motor driven 2-port ball valve (motor valve)/full bore	CB-03-1SA
MXB1-N	Motor driven oil-prohibited 2-port ball valve (motor valve)	CB-03-1SA
MXBC2	Motor driven proportional control 2-port ball valve (motor valve)	CB-03-1SA
MXG1	Motor driven 3-port ball valve (motor valve)	CB-03-1SA
MXG1D	Motor driven 3-port ball valve with relay (motor valve)	CB-03-1SA
MXG1D-N	Motor driven oil-prohibited 3-port ball valve (motor valve)	CB-03-1SA
MXG1-N	Motor driven oil-prohibited 3-port ball valve (motor valve)	CB-03-1SA
MXGC2	Motor driven proportional control 3-port ball valve (motor valve)	CB-03-1SA
MYB1	Metal-free 2-port solenoid valve	CB-03-1SA
MYB2	Metal-free 2-port solenoid valve	CB-03-1SA
MYB3	Metal-free 2-port solenoid valve	CB-03-1SA
MYG1	Metal-free 3-port solenoid valve	CB-03-1SA
MYG2	Metal-free 3-port solenoid valve	CB-03-1SA
MYG3	Metal-free 3-port solenoid valve	CB-03-1SA
N		
N*P51*	Ⓑ Pilot operated 2, 3, 5-port valve/block manifold	CB-023SA
NAB*	Air operated 2-port valve/single unit (compact cylinder valve)	CB-03-1SA
NAB*V	Air operated 2-port valve with solenoid valve for low vacuum/single unit (compact cylinder valve)	CB-03-1SA
NAB-4SX1450	Air operated 2-port valve, cylinder valve for high pressure air	CB-03-1SA
NAB-4SX1451	Air operated 2-port valve, cylinder valve for high pressure air	CB-03-1SA
NAB-6X2191/2192	Medium pressure cylinder valve	CB-03-1SA
NAB-X2267/2268	Color changing valve	CB-03-1SA
NAD*	Diaphragm cylinder valve	CB-03-1SA
NAD*V	Diaphragm cylinder valve for low vacuum	CB-03-1SA
NAP11	Air operated 3-port valve	CB-03-1SA
NCK	Shock absorber/fixed	CB-030SA 1902
NHS-H	New handling system/Z-axis module HRL	CB-030SA 1430
NHS-S	New handling system/Z-axis module STL-B	CB-030SA 1440
NP13/14	Internal pilot 3-port valve with solenoid valve	CB-03-1SA
NPV2	Direct pressure automatic pinch valve	CB-03-1SA
NS	Nitrogen gas extraction unit/ Unit	CB-024SA
NSU	Nitrogen gas extraction unit/ System	CB-024SA
NSR	New handling system/X-axis module	CB-030SA 1422
NU	New urethane tube	CB-024SA
NVP11	Air operated 3-port valve/with solenoid valve	CB-03-1SA
O		
OGD10/20R	Manual valve for process gas	CB-03-1SA
OMC2	Sequential fluid control components for pulse-jet valve (large port size dust collector valve)	CB-03-1SA
P		
P1100-W	Reed switch Compact mechanical pressure switch	CB-024SA
P4000-W	Mechanical pressure switch/ Standard White Series	CB-024SA
P4100-W	Reed switch Compact mechanical pressure switch	CB-024SA
P512*	Ⓓ Pilot operated 2-port valve/pilot	CB-023SA
P513*	Ⓓ Pilot operated 3-port valve/pilot	CB-023SA
P5142	Ⓓ Pilot operated 5-port valve/pilot	CB-023SA
P8100-W	Reed switch Compact mechanical pressure switch	CB-024SA
PCC	Pin clamp cylinder Double acting/single rod	CB-030SA 1118
PCC-Q	Pin clamp cylinder Double acting/position locking	CB-030SA 1118
PD2	Pilot operated 2-port air operated valve for dust collector	CB-03-1SA
PD3-20 to 40A	Pilot operated 2-port air operated valve for dust collector	CB-03-1SA
PD3-65 to 80A/M	Pilot operated 2-port air operated valve for large bore size dust collector	CB-03-1SA
PDV2	Pilot operated 2-port valve with solenoid valve for dust collector	CB-03-1SA

PDV3-20 to 40A	Pilot operated 2-port valve with solenoid valve for dust collector	CB-03-1SA
PDV3-65 to 80A/M	Pilot operated 2-port valve with solenoid valve for large bore size dust collector	CB-03-1SA
PDVE4	Explosion-proof 2-port solenoid valve (explosion-proof pulse-jet valve) for dust collector	CB-03-1SA
PE	Pressure switch/logic valve	CB-024SA
PFD	Pneumatic flow rate sensor/separated display	CB-024SA
PFK	Pneumatic flow rate sensor/tester kit	CB-024SA
PG	Push-in fitting for fiber tube (Standard)	CB-024SA
PGM	Regulator for process gas	CB-03-1SA
PG-P2-B	Blanking plug	CB-024SA
PJVB	Control box manifold solenoid valve (2-port solenoid valve for pulse jet control)	CB-03-1SA
PKA	Pilot kick 2-port solenoid valve for air	CB-03-1SA
PKS	Pilot kick 2-port solenoid valve for steam	CB-03-1SA
PKW	Pilot kick 2-port solenoid valve for water	CB-03-1SA
PL	PL switch	CB-024SA
PLE-B12	Side block/integrated	CB-024SA
PLJ-C12	YES element/relay	CB-024SA
PLK-A11	OR element/line type	CB-024SA
PLK-B12	OR element/integrated	CB-024SA
PLK-C12	OR element/relay	CB-024SA
PLL-A11	AND element/line type	CB-024SA
PLL-B12	AND element/integrated	CB-024SA
PLL-C12	AND element/relay	CB-024SA
PLM	Memory element/relay	CB-024SA
PLN-B12	NOT element/integrated	CB-024SA
PLN-C12	NOT element/relay	CB-024SA
PLN-D12	Threshold element/relay	CB-024SA
PMP	Fine regulator	CB-03-1SA
PNA	Oxygen concentration monitor	CB-024SA
PPD3	Electronic pressure switch/ Sensor/amplifier integrated with display	CB-024SA
PPD3-S	Electronic pressure switch/stainless steel diaphragm sensor/sensor/amplifier integrated with display	CB-024SA
PPE	Compact electronic pressure switch/ Sensor/amplifier integrated without display	CB-024SA
PPE-*A	Compact electronic pressure switch/ Sensor-amplifier integrated/without display/analog output	CB-024SA
PPG-D	Electronic pressure sensor with digital display	CB-024SA
PPR	Electronic pressure sensor with digital display	CB-024SA
PPX	Digital pressure sensor	CB-024SA
PRD	Amplifier/element and sensor	CB-024SA
PRE-A12	Pressure switch/relay	CB-024SA
PRF-A2	Booster/element and sensor	CB-024SA
PRS-A12	Solenoid valve/relay	CB-024SA
PRT	Timer/relay	CB-024SA
PSD	PLC branch block	CB-024SA
PSE	PLC I/O block	CB-024SA
PSL	PLC AND element	CB-024SA
PSM	PLC element	CB-024SA
PSV	PLC sub-base V type	CB-024SA
PSW	Electronic pressure switch/ Sensor/amplifier integrated without display	CB-024SA
PTN2	Fitting for fiber tube	CB-024SA
PV5-6R	Ⓓ Pilot operated 5-port valve ISO valve / I/O connector/ISO size (1)	CB-023SA
PV5-8R	Ⓓ Pilot operated 5-port valve ISO valve / I/O connector/ISO size (2)	CB-023SA
PV5G-6	Ⓓ Pilot operated 5-port valve ISO valve /DIN terminal box/ISO size (1)	CB-023SA
PV5G-8	Ⓓ Pilot operated 5-port valve ISO valve /DIN terminal box/ISO size (2)	CB-023SA
PV5S-0	ISO compliant master valve	CB-023SA
PVP	Precise suction plate	CB-024SA
PVS	Pilot operated 2-port solenoid valve	CB-03-1SA
PWS	Threshold sensor	CB-024SA
PXB-B3	Pushbutton switch and switch body/separated	CB-024SA
PXC-K	Limit switch	CB-024SA
PXC-M	Miniature limit switch	CB-024SA

Listed catalog No.

CB-029SA ... Pneumatic Cylinders I
CB-030SA ... Pneumatic Cylinders II
CB-023SA ... Pneumatic Valves
CB-024SA ... Pneumatic, Vacuum and Auxiliary Components
CB-03-1SA ... General Purpose Valves

Codes (pneumatic valves and general purpose valves)

Ⓓ... Discrete valves
Ⓘ... Individual wiring manifolds
Ⓑ... Block manifolds
Ⓡ... Reduced wiring manifolds
Ⓧ... Mix manifolds
Ⓜ... Manifolds

Model No. [index in alphabetical order]

Model No.	Model	Catalog No./page
P		
PXC-M	Compact limit switch	CB-024SA
PXD	Proximity sensor/element and sensor	CB-024SA
PXF	Limit sensor/element and sensor	CB-024SA
PXV	Air lamp	CB-024SA
PYM	Fine regulator	CB-03-1SA
PZM	Mounting bracket/line type	CB-024SA
PZU	Sub-base and input block/ relay sub-base	CB-024SA
Q		
QEL	Quick exhaust valve	CB-024SA
QEV2	Quick exhaust valve	CB-024SA
R		
R0, 3, 4, 6	Cylinder switch/ 1-color LED/2-wire reed	CB-029SA CB-030SA Ending Page 14
R1, 2	Cylinder switch/ 1-color LED, proximity 2-wire	CB-029SA CB-030SA Ending Page 14
R1000 to 8000-P6	Regulator/copper and PTFE free series	CB-024SA
R1000 to 8000-W	Regulator/Standard White Series	CB-024SA
R1100 to 8100-P6	Reverse regulator/copper and PTFE free series	CB-024SA
R1100 to R8100-W	Reverse regulator/Standard White Series	CB-024SA
R2, 3Y	Cylinder switch/ 2-color LED, 2, 3-wire proximity	CB-029SA CB-030SA Ending Page 14
R3000 to 8000-G4	Regulator/flame-resistant series	CB-024SA
R3100 to 8100-G4	Reverse regulator/flame-resistant series	CB-024SA
R5	Cylinder switch/ Without display/reed 2-wire	CB-029SA CB-030SA Ending Page 14
RA800	Compact regulator/compact piston	CB-024SA
RB500	Compact regulator	CB-024SA
RC2000	Clean regulator	CB-024SA
RCC2	Rotary clamp cylinder Double acting/single rod	CB-030SA 1096
RCC2-G4	Rotary clamp cylinder Anti-spatter adherence	CB-030SA 1108
RCS2	Rotary clamp cylinder (single guide) double acting/single rod	CB-030SA 1068
RCS2-G4	Rotary clamp cylinder (single guide) double acting/anti-spatter adherence	CB-030SA 1084
RCS2-T2	Rotary clamp cylinder (single guide) packing material fluoro rubber	CB-030SA 1078
RG	Fiber tube push-in fitting (flame resistance)	CB-024SA
RJB500	Compact direct acting precision regulator	CB-024SA
RJF	Rotary fitting	CB-024SA
RM3000, 4000	Regulator/medium pressure series	CB-024SA
RN3000 to 8000	Oil-prohibited regulator	CB-024SA
RP1000	Precision regulator	CB-024SA
RPE1000	Precision regulator	CB-024SA
RP2000	Precision regulator	CB-024SA
RRC	Rotary actuator/ Rack and pinion	CB-030SA 1286
RS-6	Rain sensor for automatic watering control	CB-03-1SA
RSC-G	Watering controller	CB-03-1SA
RSC-1WP	Battery operated watering controller	CB-03-1SA
RSC-1WP-C	Automatic watering controller	CB-03-1SA
RSC-1WP-H	Automatic watering controller	CB-03-1SA
RSC-2WP	Battery operated watering controller	CB-03-1SA
RSC-S5	Solar controller	CB-03-1SA
RSV-K	Solenoid valve for automatic watering control	CB-03-1SA
RSV-W	Solenoid valve for automatic watering control	CB-03-1SA
RTD-3A	Air timer/logic valve	CB-024SA
RW4000, 8000	Regulator Outdoor Series	CB-024SA
RV3DA	Compact rotary actuator/ Angle variable/double vane mechanism	CB-030SA 1354
RV3DV/W	Compact rotary actuator/ With valve/double vane mechanism	CB-030SA 1350
RV3DV/W	Large rotary actuator/ With valve/double vane mechanism	CB-030SA 1372
RV3S/D	Compact rotary actuator/vane	CB-030SA 1338
RV3S/D	Large rotary actuator/vane	CB-030SA 1364
RV3S/DH	Large rotary actuator/ Low hydraulic/vane mechanism	CB-030SA 1378
RV3SA	Compact rotary actuator/ Angle variable/single vane mechanism	CB-030SA 1354
RV3SV/W	Compact rotary actuator/ With valve/single vane mechanism	CB-030SA 1350
RV3SV/W	Large rotary actuator/ With valve/single vane mechanism	CB-030SA 1372
RVC	Shock absorber	CB-030SA 1382

S

SAB*A	Air operated 2-port valve for air/gas (cylinder valve)	CB-03-1SA	
SAB*S	Air operated 2-port valve for steam/water/air (cylinder valve)	CB-03-1SA	
SAB*V	Air operated 2-port valve for low vacuum (cylinder valve)	CB-03-1SA	
SAB*W	Air operated 2-port valve for water/liquid (cylinder valve)	CB-03-1SA	
SAL	Compact air lamp/logic valve	CB-024SA	
SC1	Speed controller/medium bore size	CB-024SA	
SC1-W	Speed controller/Outdoor Series	CB-024SA	
SC-20A to 50A	Speed controller/large bore size	CB-024SA	
SC3P	Speed controller/ Stainless steel anti-corrosion	CB-024SA	
SC3R	Speed controller/ Direct piping/elbow	CB-024SA	
SC3U	Speed controller/ Universal/push-in fitting	CB-024SA	
SC3W	Speed controller/ Elbow/push-in fitting	CB-024SA	
SCA2	Medium bore size cylinder (medium bore size ø40 to 100)/double acting/single rod		450
SCA2-B	Medium bore size cylinder (medium bore size ø40 to 100)/double acting/back to back		548
SCA2-D	Medium bore size cylinder (medium bore size ø40 to 100)/double acting/double rod		540
SCA2-G	Medium bore size cylinder (medium bore size ø40 to 100)/double acting/rubber scraper		576
SCA2-G1	Medium bore size cylinder (medium bore size ø40 to 100)/double acting/with scraper		590
SCA2-G2/3	Medium bore size cylinder (medium bore size ø40 to 100)/double acting/coolant proof		584
SCA2-G4	Medium bore size cylinder (medium bore size ø40 to 100)/double acting/anti-spatter adherence		590
SCA2-H	Medium bore size cylinder (medium bore size ø40 to 100)/double acting/low hydraulic		568
SCA2-K	Medium bore size cylinder (medium bore size ø40 to 100)/double acting/steel tube		564
SCA2-O	Medium bore size cylinder (medium bore size ø40 to 100)/double acting/low speed		526
SCA2-P	Medium bore size cylinder (medium bore size ø40 to 100)/double acting/stroke adjustable/push		472
SCA2-P12	Medium bore size cylinder (oil-prohibited)	CB-029SA CB-030SA	Ending Page 132
SCA2-Q2	Medium bore size cylinder (medium bore size ø40 to 100)/double acting/position locking		494
SCA2-R	Medium bore size cylinder (medium bore size ø40 to 100)/double acting/adjustable stroke/pull		480
SCA2-T	Medium bore size cylinder (medium bore size ø40 to 100)/double acting/heat resistance		488
SCA2-U	Medium bore size cylinder (medium bore size ø40 to 100)/double acting/low friction		534
SCA2-V	Medium bore size cylinder (medium bore size ø40 to 100)/with valve/double acting		596
SCA2-W	Medium bore size cylinder (medium bore size ø40 to 100)/double acting/2-stage		556
SCD	Speed controller/ Miniature in/out	CB-024SA	
SCD2	Speed controller/ In/out line type/with push-in fitting	CB-024SA	
SCG	Tie rod cylinder/ Double acting/single rod		358
SCG-D	Tie rod cylinder/ Double acting/double rod		406
SCG-G	Tie rod cylinder/ Double acting/rubber scraper		418
SCG-G2/3	Tie rod cylinder/ Double acting/coolant proof		424
SCG-G4	Tie rod cylinder/ Double acting/anti-spatter adherence		430
SCG-M	Tie rod cylinder/ Double acting/rotation-stop		412
SCG-O	Tie rod cylinder/ Double acting/low speed		396
SCG-Q	Tie rod cylinder/ Double acting/position locking		374
SCG-U	Tie rod cylinder/ Double acting/low friction		402
SCK	Shock absorber/adjustable	CB-030SA	1914

Listed catalog No.

CB-029SA ... Pneumatic Cylinders I
CB-030SA ... Pneumatic Cylinders II
CB-023SA ... Pneumatic Valves
CB-024SA ... Pneumatic, Vacuum and Auxiliary Components
CB-03-1SA ... General Purpose Valves

Codes (pneumatic valves and general purpose valves)

Ⓓ... Discrete valves
Ⓘ... Individual wiring manifolds
Ⓑ... Block manifolds
Ⓡ... Reduced wiring manifolds
Ⓧ... Mix manifolds
Ⓜ... Manifolds

Model No. [index in alphabetical order]

Model No.	Model	Catalog No./page
S		
SCL2	Speed controller/ Line type/with push-in fitting	CB-024SA
SCL2-N	Needle valve/ Line type/with push-in fitting	CB-024SA
SCM	Round shaped cylinder/ double acting/single rod	232
SC-M3/M5 (-F)	Speed controller/miniature	CB-024SA
SCM-B	Round shaped cylinder/ double acting/back to back	316
SCM-D	Round shaped cylinder/ double acting/double rod	308
SCM-F	Round shaped cylinder/ double acting/fine speed	292
SCM-LD	Round shaped cylinder/double acting/direct mounting foot	340
SCM-M	Round shaped cylinder/ double acting/rotation-stop	334
SCM-O	Round shaped cylinder/ double acting/low speed	298
SCM-P	Round shaped cylinder/double acting/adjustable stroke/push	266
SCM-Q	Round shaped cylinder/ double acting/position locking	282
SCM-R	Round shaped cylinder/double acting/adjustable stroke/pull	272
SCM-T	Round shaped cylinder/ double acting/heat resistance	278
SCM-U	Round shaped cylinder/ double acting/low friction	302
SCM-W	Round shaped cylinder/ double acting/2-stage	322
SCM-W4	Round shaped cylinder/ double acting/tandem	328
SCM-X	Round shaped cylinder/single acting/push	254
SCM-Y	Round shaped cylinder/single acting/pull	260
SCPD3	Pencil shaped cylinder/ Double acting/single rod	8
SCPD3-*C	Pencil shaped cylinder/ Double acting/rubber-air cushioned	28
SCPD3-D	Pencil shaped cylinder/ Double acting/double rod	44
SCPD3-DT	Pencil shaped cylinder/ Double acting/double rod/heat resistance	44
SCPD3-F	Pencil shaped cylinder/ Double acting/fine speed	34
SCPD3-K	Pencil shaped cylinder/ Double acting/high load	64
SCPD3-M	Pencil shaped cylinder/ Double acting/rotation-stop	56
SCPD3-O	Pencil shaped cylinder/ Double acting/low speed	40
SCPD3-T	Pencil shaped cylinder/ Double acting/heat resistance	26
SCPD3-V	Pencil shaped cylinder/ With valve/double acting	70
SCPD3-Z	Pencil shaped cylinder/ Double acting/with speed controller	50
SCPH3	Pencil shaped cylinder/ Single acting/pull	16
SCPS	Pencil shaped cylinder/ Single acting/push	16
SCPS3	Pencil shaped cylinder/ Single acting/push	16
SCPS3-M	Pencil shaped cylinder/ Single acting/push/rotation-stop	56
SCPS3-V	Pencil shaped cylinder/ With valve/single acting	70
SCS2	Large bore size cylinder (large bore size ø125 to 250)/double acting/single rod/lubricating	626
SCS2-(N)	Large bore size cylinder (large bore size ø125 to 250)/double acting/single rod/non-lubricating	626
SCS2-(N)D	Large bore size cylinder (large bore size ø125 to 250)/double acting/double rod/non-lubricating	648
SCS2-B	Large bore size cylinder (large bore size ø125 to 250)/double acting/back to back	654
SCS2-D	Large bore size cylinder (large bore size ø125 to 250)/double acting/double rod	648
SCS2-G	Large bore size cylinder (large bore size ø125 to 250)/double acting/rubber scraper	668
SCS2-H	Large bore size cylinder (large bore size ø125 to 250)/double acting/low hydraulic	662
SCS2-P	Large bore size cylinder (large bore size ø125 to 250)/double acting/adjustable stroke	640
SCS2-T	Large bore size cylinder (large bore size ø125 to 250)/double acting/heat resistance	644
SCS2-W	Large bore size cylinder (large bore size ø125 to 250)/double acting/2-stage	658
SD301, 302D	High polymer membrane dryer/single unit	CB-024SA 1818

SD301, 302E	High polymer membrane dryer/single unit	CB-024SA	
SD3015 to 3075	High polymer membrane dryer/single unit	CB-024SA	
SD401, 402D	High polymer membrane dryer/single unit	CB-024SA	
SD401, 402E	High polymer membrane dryer/single unit	CB-024SA	
SD4050 to 4100	High polymer membrane dryer/single unit	CB-024SA	
SDM4050 to 4100	High polymer membrane dryer/ Super dryer modular series (large)	CB-024SA	
SFC*	Anti-bacterial/bacteria-removing filter	CB-024SA	
SFS10	Bacteria removing filter/inline	CB-024SA	
SFR/SFRT	Fine speed fan rotary actuator	CB-029SA CB-030SA	Ending Page 131
SHC	High power cylinder/double acting/double force	CB-030SA	1144
SHC-K	High power cylinder/double acting/quad force	CB-030SA	1154
SHD	Desiccant air dryer/ Medium/large heatless dryer	CB-024SA	
SHV2	Shuttle valve	CB-024SA	
SKAC	Contact protecting circuit box (for AC circuit)	CB-029SA CB-030SA	Ending Page 27
SKDC	Contact protecting circuit box (for DC circuit)	CB-029SA CB-030SA	Ending Page 27
SKH	Shock absorbing valve	CB-023SA	
SKL	Shock absorber	CB-030SA	1894
SL	Silencer/metal body	CB-024SA	
SLM	Silencer/miniature	CB-024SA	
SL-M5	Silencer/small bore size	CB-024SA	
SL-W	Silencer/Outdoor Series	CB-024SA	
SLW	Silencer/Small bore size/ resin body	CB-024SA	
SLW-*A-H	Silencer/High noise reduction/ small bore size/resin body	CB-024SA	
SLW-*L	Silencer/Large flow rate/ small bore size/resin body	CB-024SA	
SLW-20S	Silencer/High noise reduction/ compact	CB-024SA	
SLW-6S, 8S	Silencer/High noise reduction/ compact	CB-024SA	
SLW-H*	Silencer/push-in	CB-024SA	
SM-25	Shuttle mover Standard/high load		1784
SMG	Compact cylinder/double acting/single rod		1386
SMG-F	Compact cylinder/double acting/fine speed		1400
SMG-M	Compact cylinder/double acting/rotation-stop		1404
SMG-X	Compact cylinder/single acting/push		1392
SMG-Y	Compact cylinder/single acting/pull		1392
SMW	Metering valve with silencer	CB-024SA	
SMW2	Metering valve with silencer	CB-024SA	
SNP	3-port solenoid valve with spool position detection	CB-024SA	
SNS	Residual pressure exhaust valve with spool position detection	CB-024SA	
SPK	Pilot kick 2-port solenoid valve for steam	CB-03-1SA	
SR	Flame-resistant tube	CB-024SA	
SRG3	High precision guided rodless cylinder (single guide)/double acting		1650
SRL3	Rodless cylinder/double acting		1574
SRL3-G	Rodless cylinder/double acting/with resin guide		1590
SRL3-GQ	Rodless cylinder/double acting/with resin guide/with position locking function		1614
SRL3-Q	Rodless cylinder/double acting/ with position locking function		1604
SRM3	High precision guided rodless cylinder (double guide)/double acting		1676
SRM3-Q	High precision guided rodless cylinder (double guide)/double acting/position locking		1676
SRT3	Rodless cylinder with brake/ double acting		1706
SSD	Compact cylinder/double acting/single rod		1094
SSD2	Compact cylinder/double acting/single rod		752
SSD2-B	Compact cylinder/double acting/back to back		890

Listed catalog No.

CB-029SA ... Pneumatic Cylinders I
CB-030SA ... Pneumatic Cylinders II
CB-023SA ... Pneumatic Valves
CB-024SA ... Pneumatic, Vacuum and Auxiliary Components
CB-03-1SA ... General Purpose Valves

Codes (pneumatic valves and general purpose valves)

Ⓓ... Discrete valves
Ⓘ... Individual wiring manifolds
Ⓑ... Block manifolds
Ⓡ... Reduced wiring manifolds
Ⓧ... Mix manifolds
Ⓜ... Manifolds

Model No. [index in alphabetical order]

Model No.	Model	Catalog No./page
S		
SSD2-D	Compact cylinder/double acting/double rod	868
SSD2-DG1	Compact cylinder/double acting/double rod/coil scraper	984
SSD2-DG4	Compact cylinder/double acting/ double rod/anti-spatter adherence	984
SSD2-DM	Compact cylinder/double acting/double rod/rotation-stop	924
SSD2-F	Compact cylinder/double acting/fine speed	854
SSD2-G	Compact cylinder/double acting/rubber scraper	936
SSD2-G1	Compact cylinder/double acting/coil scraper	966
SSD2-G1L4	Compact cylinder/double acting/with strong magnetic field proof switch/with coil scraper	1018
SSD2-G2/G3	Compact cylinder/double acting/coolant proof	946
SSD2-G4	Compact cylinder/double acting/anti-spatter adherence	966
SSD2-G5	Compact cylinder/double acting/ environment-resistant scraper	992
SSD2-K	Compact cylinder/double acting/single rod/high load	776
SSD2-K-*C	Compact cylinder/double acting/ high load/rubber-air cushioned	832
SSD2-KF	Compact cylinder/double acting/fine speed	854
SSD2-KG1	Compact cylinder/double acting/high load/coil scraper	974
SSD2-KG1L4	Compact cylinder/double acting/high load/with strong magnetic field proof switch/with coil scraper	1030
SSD2-KG2/KG3	Compact cylinder/double acting/high load/coolant proof	956
SSD2-KG4	Compact cylinder/double acting/ high load/anti-spatter adherence	974
SSD2-KG5	Compact cylinder/double acting/high load/environment-resistant scraper	1002
SSD2-KL4	Compact cylinder/double acting/high load/ with strong magnetic field proof switch	1024
SSD2-KU	Compact cylinder/double acting/high load/low friction	864
SSD2-L	Compact cylinder/double acting/single rod/long stroke	792
SSD2-L4	Compact cylinder/double acting/with strong magnetic field proof switch	1012
SSD2-M	Compact cylinder/double acting/rotation-stop	910
SSD2-O	Compact cylinder/double acting/low speed	858
SSD2-P7*	Compact cylinder/double acting/ clean-room specifications	1036
SSD2-Q	Compact cylinder/double acting/with position locking	840
SSD2-T1	Compact cylinder/double acting/heat resistance	820
SSD2-T1L	Compact cylinder/double acting/ with heat resistant cylinder switch	824
SSD2-W	Compact cylinder/double acting/2-stage	902
SSD2-X	Compact cylinder/single acting/push	802
SSD2-Y	Compact cylinder/single acting/pull	802
SSD-B	Compact cylinder/double acting/back to back	1200
SSD-D	Compact cylinder/double acting/double rod	1188
SSD-DG1	Compact cylinder/double acting/double rod/coil scraper	1264
SSD-DG4	Compact cylinder/double acting/ double rod/anti-spatter adherence	1264
SSD-F	Compact cylinder/double acting/fine speed	1172
SSD-G1	Compact cylinder/double acting/coil scraper	1246
SSD-G1L4	Compact cylinder/double acting/with strong magnetic field proof for switch/with coil scraper	1294
SSD-G2/G3	Compact cylinder/double acting/coolant proof	1230
SSD-G4	Compact cylinder/double acting/anti-spatter adherence	1246
SSD-G5	Compact cylinder/double acting/single rod/environment-resistant scraper	1272
SSD-K	Compact cylinder/double acting/single rod/high load	1116
SSD-K-*C	Compact cylinder/double acting/ high load/rubber-air cushioned	1150
SSD-KF	Compact cylinder/double acting/high load/fine speed	1172

SSD-KG1	Compact cylinder/double acting/high load/coil scraper		1254
SSD-KG1L4	Compact cylinder/double acting/high load/with strong magnetic field proof switch/with coil scraper		1306
SSD-KG2/KG3	Compact cylinder/double acting/high load/coolant proof		1238
SSD-KG4	Compact cylinder/double acting/ high load/anti-spatter adherence		1254
SSD-KG5	Compact cylinder/double acting/high load/environment-resistant scraper		1280
SSD-KL4	Compact cylinder/double acting/high load/ with strong magnetic field proof switch		1300
SSD-K-P12	Compact cylinder/oil-prohibited	CB-029SA CB-030SA	Ending Page 132
SSD-KU	Compact cylinder/double acting/low friction		1184
SSD-L4	Compact cylinder/double acting/with strong magnetic field proof switch		1288
SSD-LN	With length measuring sensor	CB-030SA	1474
SSD-M	Compact cylinder/double acting/rotation-stop		1220
SSD-O	Compact cylinder/double acting/low speed		1178
SSD-Q	Compact cylinder/double acting/position locking		1160
SSD-T	Compact cylinder/double acting/heat resistance		1138
SSD-T1L	Compact cylinder/double acting/ with heat resistant cylinder switch		1142
SSD-W	Compact cylinder/double acting/2-stage		1210
SSD-X	Compact cylinder/single acting/push		1126
SSD-Y	Compact cylinder/single acting/pull		1126
SSG	Guided super compact cylinder/ double acting/single rod		1068
STA2	Stopper cylinder	CB-029SA CB-030SA	Ending Page 130
STG	Guided cylinder/ Double acting/single rod	CB-030SA	336
STG-*-*C	Guided cylinder/ Double acting/rubber-air cushioned	CB-030SA	350
STG-*C	Guided cylinder/ Double acting/air cushioned	CB-030SA	358
STG-*G	Guided cylinder/ Double acting/rubber scraper	CB-030SA	376
STG-*G1	Guided cylinder/ Double acting/coil scraper	CB-030SA	376
STG-*G2/G3	Guided cylinder/ Double acting/coolant proof	CB-030SA	382
STG-*G4	Guided cylinder/ Double acting/anti-spatter adherence	CB-030SA	388
STG-*Q	Guided cylinder/ Double acting/position locking	CB-030SA	368
STG-B-P7*	Guided cylinder/ Double acting/clean-room specifications	CB-030SA	404
STG-K	Guided cylinder/ Double acting/heavy duty guide rod	CB-030SA	430
STG-MG5	Guided cylinder/ Double acting/environment-resistant scraper	CB-030SA	394
STK	Stopper cylinder/ Double acting/round rod end form		1512
STK-JY	Stopper cylinder/ Single acting/pull/rod end form roller		1548
STK-JY1	Stopper cylinder/ Double acting/spring integrated/rod end form roller		1554
STK-M	Stopper cylinder/ Double acting/rod end form chamfered		1530
STK-MY	Stopper cylinder/ Single acting/pull/rod end form chamfered		1536
STK-MY1	Stopper cylinder/ Double acting/spring integrated/rod end form chamfered		1542
STK-Y	Stopper cylinder/ Single acting/pull/round rod end form		1518
STK-Y1	Stopper cylinder/ Double acting/spring integrated/round rod end form		1524
STL-*	Guided cylinder (long stroke)/ double acting/single rod	CB-030SA	448
STL-*-*C	Guided cylinder (long stroke)/ double acting/rubber-air cushioned	CB-030SA	486

Listed catalog No.

CB-029SA ... Pneumatic Cylinders I
CB-030SA ... Pneumatic Cylinders II
CB-023SA ... Pneumatic Valves
CB-024SA ... Pneumatic, Vacuum and Auxiliary Components
CB-03-1SA ... General Purpose Valves

Codes (pneumatic valves and general purpose valves)

Ⓓ... Discrete valves
Ⓘ... Individual wiring manifolds
Ⓑ... Block manifolds
Ⓡ... Reduced wiring manifolds
Ⓧ... Mix manifolds
Ⓜ... Manifolds

Model No. [index in alphabetical order]

Model No.	Model	Catalog No./page	
S			
STL-*C	Guided cylinder (long stroke)/ double acting/air cushioned	CB-030SA	486
STL-*F	Guided cylinder (long stroke)/ double acting/fine speed	CB-030SA	512
STL-*G/G1	Guided cylinder (long stroke)/ double acting/scraper	CB-030SA	518
STL-*G2/G3	Guided cylinder (long stroke)/ double acting/coolant proof	CB-030SA	526
STL-*G4	Guided cylinder (long stroke)/double acting/anti-spatter adherence	CB-030SA	536
STL-*O	Guided cylinder (long stroke)/ double acting/low speed	CB-030SA	514
STL-*P	Guided cylinder (long stroke)/double acting/stroke adjustable/push	CB-030SA	470
STL-*Q	Guided cylinder (long stroke)/ double acting/position locking	CB-030SA	500
STL-*T	Guided cylinder (long stroke)/ double acting/heat resistance	CB-030SA	476
STL-*T2	Guided cylinder (long stroke)/double acting/packing material fluoro rubber	CB-030SA	480
STL-*V	Guided cylinder (long stroke)/ with valve/double acting	CB-030SA	544
STM-B-P7*	Guided cylinder/ Double acting/single rod/clean-room specifications	CB-030SA	320
STM-M/B	Guided cylinder/ Double acting/single rod	CB-030SA	314
STR2-*	Twin rod cylinder/double acting/single rod	CB-030SA	580
STR2-*D	Twin rod cylinder/double acting/double rod	CB-030SA	612
STR2-*F	Twin rod cylinder/double acting/fine speed	CB-030SA	610
STR2-*O	Twin rod cylinder/double acting/low speed	CB-030SA	602
STR2-*Q	Twin rod cylinder/double acting/position locking	CB-030SA	592
STS-*	Guided cylinder (short stroke)/ double acting/single rod	CB-030SA	448
STS-*-*C	Guided cylinder (short stroke)/ double acting/rubber-air cushioned	CB-030SA	486
STS-*C	Guided cylinder (short stroke)/ double acting/air cushioned	CB-030SA	492
STS-*F	Guided cylinder (short stroke)/ double acting/fine speed	CB-030SA	512
STS-*G/G1	Guided cylinder (short stroke)/double acting/scraper	CB-030SA	518
STS-*G2/G3	Guided cylinder (short stroke)/ double acting/coolant proof	CB-030SA	526
STS-*G4	Guided cylinder (short stroke)/ double acting/anti-spatter adherence	CB-030SA	536
STS-*O	Guided cylinder (short stroke)/ double acting/low speed	CB-030SA	514
STS-*P	Guided cylinder (short stroke)/ double acting/stroke adjustable/push	CB-030SA	470
STS-*Q	Guided cylinder (short stroke)/ double acting/position locking	CB-030SA	500
STS-*T	Guided cylinder (short stroke)/ double acting/heat resistance	CB-030SA	476
STS-*T2	Guided cylinder (short stroke)/double acting/packing material fluoro rubber	CB-030SA	480
STS-*V	Guided cylinder (short stroke)/ with valve/double acting	CB-030SA	544
SU301, 302D	High polymer membrane dryer/unit	CB-024SA	
SU301, 302E	High polymer membrane dryer/unit	CB-024SA	
SU3015 to 3075	High polymer membrane dryer/unit	CB-024SA	
SU401, 402D	High polymer membrane dryer/unit	CB-024SA	
SU401, 402E	High polymer membrane dryer/unit	CB-024SA	
SU4050, 4100	High polymer membrane dryer/unit	CB-024SA	
SVB*A	Air operated 2-port valve with solenoid valve for air/gas (cylinder valve)	CB-03-1SA	
SVB*S	Air operated 2-port valve with solenoid valve for steam/water/air (cylinder valve)	CB-03-1SA	
SVB*V	Air operated 2-port valve with solenoid valve for low vacuum (cylinder valve)	CB-03-1SA	
SVB*W	Air operated 2-port valve with solenoid valve for water/liquid (cylinder valve)	CB-03-1SA	
SWD	Weir diaphragm valve	CB-03-1SA	
T			
T0V/H/C	Cylinder switch/ 1-color LED/2-wire reed	CB-029SA CB-030SA	Ending Page 16
T1 V/H	Cylinder switch/ 1-color LED, proximity 2-wire	CB-029SA CB-030SA	Ending Page 16
T2 V/H R	Cylinder switch/ Bend resistance lead wire/2-wire proximity sensor	CB-029SA CB-030SA	Ending Page 16
T2, 3 V/H/C	Cylinder switch/ 1-color LED, 2, 3-wire proximity	CB-029SA CB-030SA	Ending Page 16

T2, 3Y (W) V/H	Cylinder switch/ 2-color LED, 2, 3-wire proximity	CB-029SA CB-030SA Ending Page 16	
T2, 3YL V/H	Cylinder switch/ Coolant proof/2, 3-wire proximity sensor	CB-029SA CB-030SA Ending Page 17	
T2J V/H	Cylinder switch/ Off-delay/2-wire proximity sensor	CB-029SA CB-030SA Ending Page 16	
T2YD (T)	Cylinder switch/ Strong magnetic field proof/proximity 2-wire	CB-029SA CB-030SA Ending Page 17	
T3P V/H	Cylinder switch/ PNP output/3-wire proximity sensor	CB-029SA CB-030SA Ending Page 16	
T5V/H/C	Cylinder switch/ Without display/reed 2-wire	CB-029SA CB-030SA Ending Page 16	
T8 V/H	Cylinder switch/ 1-color LED/2-wire reed	CB-029SA CB-030SA Ending Page 16	
TAC-25	Medium pressure gas shut off control system	CB-03-1SA	
TLPS	Cutting tool breakage detection switch/single unit	CB-024SA	

U

U	Urethane tube	CB-024SA	
UCA2	Unit cylinder/ Double acting/single rod/metal bush bearing	CB-030SA	640
UCA2-B	Unit cylinder/ Double acting/single rod/ball bearing	CB-030SA	650
UCAC2	Position locking clamp cylinder/ double acting/single rod	CB-030SA	1030
UCAC-N32/40	Lightweight clamp cylinder/ Position locking/double acting/single rod	CB-030SA	1052
UFCD	Free position locking flat cylinder/ double acting/single rod	CB-030SA	888
UGPS2	Contact confirmation switch/unit	CB-024SA	
UGPS3	Digital gap switch/unit	CB-024SA	
UHPS	Close contact confirmation switch/unit	CB-024SA	
ULK	Brake cylinder/ Double acting/single rod	CB-030SA	680
ULKP	Brake cylinder/ Double acting/single rod (ø16)	CB-030SA	674
ULK-V	Brake cylinder/ With valve/double acting	CB-030SA	680
UMB1	High corrosion-resistant miniature direct acting 2-port solenoid valve for medical equipment	CB-03-1SA	
UMG1	High corrosion-resistant miniature direct acting 3-port solenoid valve for medical equipment	CB-03-1SA	
UP	Antistatic fiber tube (for push-in fitting)	CB-024SA	
UP-**-F1/F2	Antistatic tube	CB-024SA	
UP-9102-20-*-F1	Antistatic fiber tube	CB-024SA	
UP-9102-SR	Flame-resistant fiber tube (For push-in fitting)	CB-024SA	
US	Compact direct acting 2, 3-port solenoid valve (resin body)	CB-03-1SA	
USB2	Compact direct acting 2-port solenoid valve	CB-03-1SA	
USB3	Compact direct acting 2-port solenoid valve	CB-03-1SA	
USC	Free position locking medium bore size cylinder/double acting/single rod	CB-030SA	904
USC-G1	Free position locking medium bore size cylinder/double acting/with coil scraper	CB-030SA	904
USG2	Compact direct acting 3-port solenoid valve	CB-03-1SA	
USG3	Compact direct acting 3-port solenoid valve	CB-03-1SA	
USSD	Position locking compact cylinder/double acting/single rod	CB-030SA	846
USSD-K	Position locking compact cylinder/ double acting/single rod/high load	CB-030SA	846
UTLPS	Cutting tool breakage detection switch/unit	CB-024SA	

V

V0	Cylinder switch/ Compact strong magnetic field proof/reed 2-wire	CB-029SA CB-030SA Ending Page 25	
V1000, 3000-W	Residual pressure exhaust valve Standard White Series	CB-024SA	
V3010, 6010-W	Residual pressure exhaust valve with keyhole With keyhole, OSHA compliant	CB-024SA	
V3301, 3321-W	Slow start valve	CB-024SA	
VFA1000 to 4000	Vacuum filter	CB-024SA	
VG41D	Vacuum pressure gauge with limit marker	CB-024SA	
VLA	Solenoid valve for gas combustion system	CB-03-1SA	
VLM	Medium pressure gas safety cutoff control system	CB-03-1SA	
VNA	Solenoid valve for gas combustion system	CB-03-1SA	
VNA-R/RH	Solenoid valve for gas combustion system	CB-03-1SA	

Listed catalog No.

CB-029SA ... Pneumatic Cylinders I
CB-030SA ... Pneumatic Cylinders II
CB-023SA ... Pneumatic Valves
CB-024SA ... Pneumatic, Vacuum and Auxiliary Components
CB-03-1SA ... General Purpose Valves

Codes (pneumatic valves and general purpose valves)

Ⓓ... Discrete valves
Ⓘ... Individual wiring manifolds
Ⓑ... Block manifolds
Ⓡ... Reduced wiring manifolds
Ⓧ... Mix manifolds
Ⓜ... Manifolds

Model No. [index in alphabetical order]

Model No.	Model	Catalog No./page
V		
VNM	Medium pressure gas safety cutoff control system	CB-03-1SA
VNM-25-K	Safety residual pressure exhaust valve (increased fire safety specifications)	CB-03-1SA
VNR	Solenoid valve for gas combustion system NO (closed when energized)	CB-03-1SA
VRA2000	Vacuum regulator	CB-024SA
W		
W1000 to 8000-P6	Filter/regulator/ Copper and PTFE free Series	CB-024SA
W1000 to 8000-W	Filter/regulator/ Standard White Series	CB-024SA
W1100 to 8100-P6	Reverse filter/regulator/ Copper and PTFE free Series	CB-024SA
W1100 to 8100-W	Reverse filter/regulator/ Standard White Series	CB-024SA
W2P513*	Ⓓ Pilot operated 5-port valve/ double	CB-023SA
W3000 to 8000-G4	Filter/regulator/ Flame-resistant Series	CB-024SA
W3100 to 8100-G4	Reverse filter/regulator/ Flame-resistant Series	CB-024SA
W4GB2	Ⓓ Pilot operated 3, 5-port valve/base piping	CB-023SA
W4GB4	Ⓓ Pilot operated 5-port valve/ base side piping	CB-023SA
W4GZ4	Ⓓ Pilot operated 5-port valve/ base bottom piping	CB-023SA
WB500	Compact filter/regulator	CB-024SA
WFC	Capacitance electromagnetic flow sensor	CB-024SA
WFK2	Karman vortex flow rate sensor for water	CB-024SA
WFK3000	Karman vortex flow rate sensor for water, compact/device built-in	CB-024SA
WR1/2	Regulator for water	CB-024SA
WW4000, 8000	Filter/regulator Outdoor Series	CB-024SA
WXU	Integrated unit for water control	CB-03-1SA
Y		
YS	Y shaped strainer	CB-03-1SA
Z		
ZB4-B	Switch head	CB-024SA
ZCK	Rotary head lever actuator	CB-024SA
ZJ-L*	Tightening fitting (stainless steel)/ elbow	CB-024SA
ZJ-N*	Tightening fitting (stainless steel)/ sleeve integrated with nut	CB-024SA
ZJ-S*	Tightening fitting (stainless steel)/ straight	CB-024SA
ZJ-T*	Tightening fitting (stainless steel)/ tee	CB-024SA
ZSP	Fitting (stainless steel)	CB-024SA
ZW-L*	Fitting (stainless steel)/elbow	CB-024SA
ZW-S*	Fitting (stainless steel)/ straight	CB-024SA
ZW-T*	Fitting (stainless steel)/ tee	CB-024SA

■ Listed catalog No.

CB-029SA ... Pneumatic Cylinders I
CB-030SA ... Pneumatic Cylinders II
CB-023SA ... Pneumatic Valves
CB-024SA ... Pneumatic, Vacuum and Auxiliary Components
CB-03-1SA ... General Purpose Valves

■ Codes (pneumatic valves and general purpose valves)

Ⓓ... Discrete valves
Ⓘ... Individual wiring manifolds
Ⓑ... Block manifolds
Ⓡ... Reduced wiring manifolds
Ⓧ... Mix manifolds
Ⓜ... Manifolds

Pneumatic Cylinders I Catalog No. CB-029SA 9

Date of issue October 14, 1996 1st edition
January 31, 2017 9th edition
August 20, 2020 9th edition Ver.2
July 16, 2021 9th edition Ver.2 2-print

Place of issue **CKD Corporation**
2-250 Ouji, Komaki City, Aichi 485-8551, Japan
https://www.ckd.co.jp/en/

Fixed price 1,300 yen (tax not included)

© **CKD Corporation** 2022 Printed in Japan
Unauthorized copying prohibited
The specifications and appearances listed in this catalog may change without prior notice in order for improvements to be made.

VEGETABLE OIL INK This catalog has been printed with environmentally friendly “vegetable oil ink”.

CKD WARRANTY

Subject to the conditions below, CKD Corporation ("CKD") warrants the first end user (the "Buyer") that CKD's products are free from defects in material and workmanship.

"Warranty Period" is one (1) year from the first delivery to the customer.

CKD will, at CKD's option, either repair or replace a defective product, including lowest transportation costs but not including installation or any other similar charges, provided that (1) the buyer notifies CKD in writing of the claimed defect within one year from the date Buyer received the product, (2) provides a complete explanation of the defect, the application of the product, and such other information concerning use of the product as CKD may request, and (3) returns the product to CKD in accordance with CKD's specific written instructions and authorization obtained from CKD prior to return of the product, and CKD's inspection confirms that the product was defective.

This warranty applies only if the product was used and applied correctly under normal operating conditions and good engineering practice; was installed, operated and maintained in accordance with all instructions issued or published by CKD; was used within stated pressure, media and operating limitations published by CKD and in effect on the date of shipment; and was not subject to abuse, misuse or unauthorized modification.

THIS WARRANTY IS THE ONLY AUTHORIZED CKD WARRANTY AND IN LIEU OF ALL OTHER WARRANTIES, EXPRESSED OR IMPLIED, INCLUDING ANY IMPILIED WARRANTY OF MERCHANTABILITY OR FITNESS FOR A PARTICULAR PURPOSE, notwithstanding any disclosure to CKD of the use to which the product is to be put. The Buyer's **SOLE AND EXCLUSIVE REMEDY** on any claim of any kind for any loss or damage arising out of the manufacture, sale, delivery or use of CKD's products shall be for the repair or replacement of any defective products as provided herein.

IN NO EVENT SHALL CKD BE LIABLE FOR BUSINESS INTERRUPTIONS, LOSS OF PROFITS, PERSONAL INJURY, COSTS OF DELAY OR FOR ANY OTHER SPECIAL, INDIRECT, INCIDENTAL OR CONSEQUENTIAL LOSSES, COSTS OR DAMAGES. There are no warranties, expressed or implied, made by CKD other than the warranty against defects in material and workmanship set forth above, and CKD neither assumes nor authorizes any other person or firm to assume for it any other obligations or liability.

CKD shall not be liable for any trouble, malfunction and damages of CKD products caused, directly or indirectly, by disaster or any other causes not attributable to CKD’s responsibility. CKD also shall not be responsible for any trouble, malfunction and damages of CKD Products caused by the lack or malfunction of safety circuit or structure or function that should be commonly equipped in the Buyer's equipment in which the CKD products were used.

CKD MAINTAINS A POLICY OF ONGOING PRODUCT DEVELOPMENT AND INPROVEMENT. WE THEREFORE RESERVE THE RIGHT TO CHANGE DIMENSIONS, SPECIFICATIONS AND DESIGN WITHOUT NOTICE.

WORLD-NETWORK

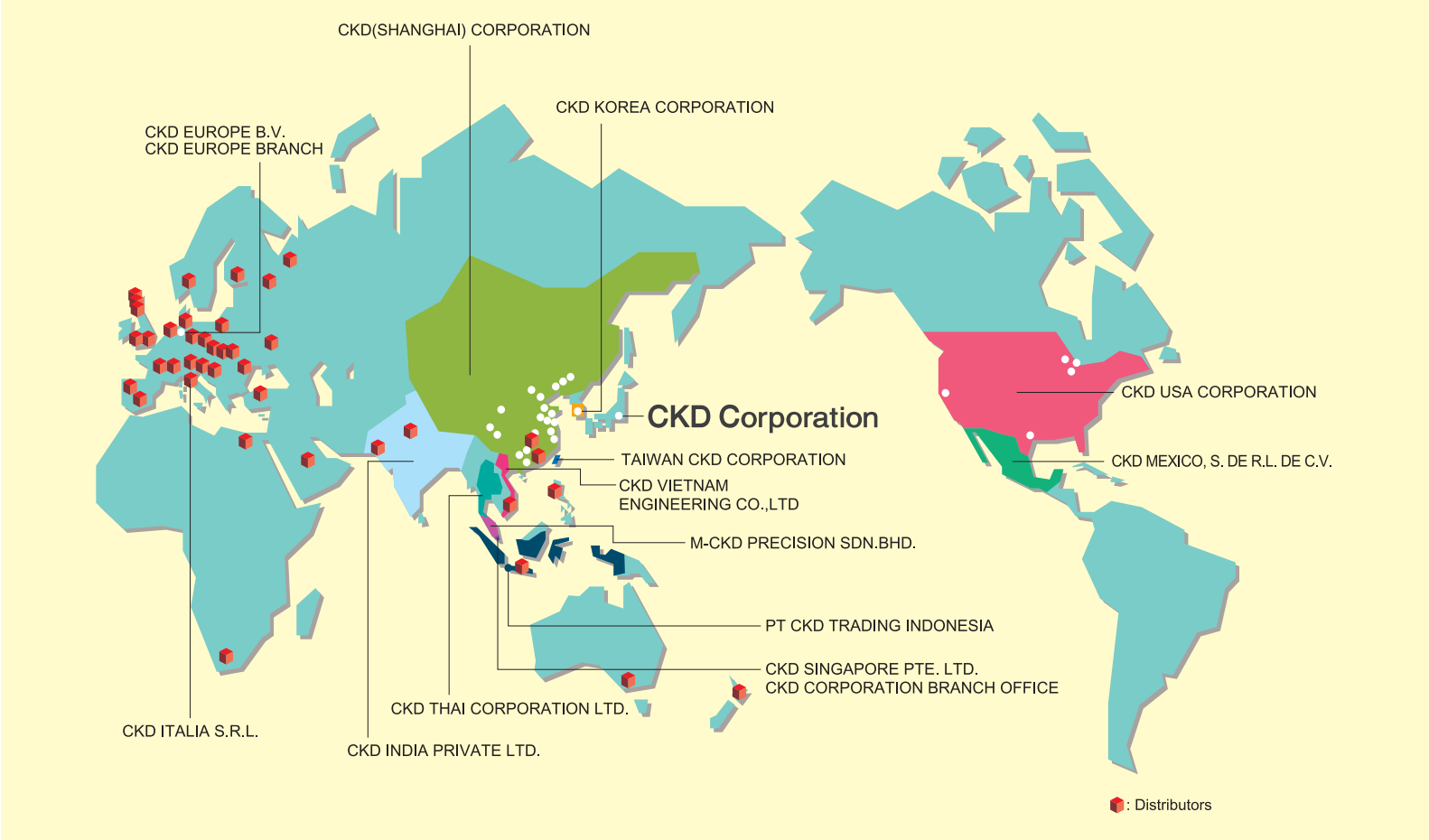

CKD Corporation

Website https://www.ckd.co.jp/en/

□ 2-250 Ouji, Komaki City, Aichi 485-8551, Japan
□ PHONE +81-568-74-1338 FAX +81-568-74-1165

ASIA

喜開理(上海)機器有限公司 CKD(SHANGHAI)CORPORATION

- 営業部/上海浦西事務所(SALES HEADQUARTERS / SHANGHAI PUXI OFFICE)
  Room 612, 6th Floor, Yuanzhongkeyan Building, No. 1905 Hongmei Road, Xuhui District, Shanghai 200233, China
  PHONE +86-21-60906046 FAX +86-21-60906046
- 上海浦東事務所(SHANGHAI PUDONG OFFICE)
- 寧波事務所(NINGBO OFFICE)
- 杭州事務所(HANGZHOU OFFICE)
- 無錫事務所(WUXI OFFICE)
- 昆山事務所(KUNSHAN OFFICE)
- 蘇州事務所(SUZHOU OFFICE)
- 南京事務所(NANJING OFFICE)
- 合肥事務所(HEFEI OFFICE)
- 成都事務所(CHENGDU OFFICE)
- 武漢事務所(WUHAN OFFICE)
- 鄭州事務所(ZHENGZHOU OFFICE)
- 長沙事務所(CHANGSHA OFFICE)
- 重慶事務所(CHONGQING OFFICE)
- 西安事務所(XIAN OFFICE)
- 広州事務所(GUANGZHOU OFFICE)
- 中山事務所(ZHONGSHAN OFFICE)
- 深圳西事務所(WEST SHENZHEN OFFICE)
- 深圳東事務所(EAST SHENZHEN OFFICE)
- 東莞事務所(DONGGUAN OFFICE)
- 厦門事務所(XIAMEN OFFICE)
- 福州事務所(FUZHOU OFFICE)
- 瀋陽事務所(SHENYANG OFFICE)
- 大連事務所(DALIAN OFFICE)
- 長春事務所(CHANGCHUN OFFICE)
- 北京事務所(BEIJING OFFICE)
- 天津事務所(TIANJIN OFFICE)
- 青島事務所(QINGDAO OFFICE)
- 潍坊事務所(WEIFANG OFFICE)
- 済南事務所(JINAN OFFICE)
- 烟台事務所(YANTAI OFFICE)

CKD INDIA PRIVATE LTD.

- HEADQUARTERS
  Unit No. 607, 6th Floor, Welldone Tech Park, Sector 48, Sohna Road, Gurgaon-122018, Haryana, India
  PHONE +91-124-418-8212
- BANGALORE OFFICE
- PUNE OFFICE
- CHENNAI OFFICE
- MUMBAI OFFICE
- HYDERABAD OFFICE

PT CKD TRADING INDONESIA

- HEAD OFFICE
  Menara Bidakara 2, 18th Floor, Jl. Jend. Gatot Subroto Kav. 71-73, Pancoran, Jakarta 12870, Indonesia
  PHONE +62-21-2938-6601 FAX +62-21-2906-9470
- MEDAN OFFICE
- BEKASI OFFICE
- KARAWANG OFFICE
- SEMARANG OFFICE
- SURABAYA OFFICE

CKD KOREA CORPORATION

- HEADQUARTERS
  (3rd Floor), 44, Sinsu-ro, Mapo-gu, Seoul 04088, Korea
  PHONE +82-2-783-5201~5203 FAX +82-2-783-5204
- 水原営業所(SUWON OFFICE)
- 天安営業所(CHEONAN OFFICE)
- 蔚山営業所(ULSAN OFFICE)

M-CKD PRECISION SDN.BHD.

- HEAD OFFICE
  Lot No.6,Jalan Modal 23/2, Seksyen 23, Kawasan MIEL, Fasa 8, 40300 Shah Alam,Selangor Darul Ehsan, Malaysia
  PHONE +60-3-5541-1468 FAX +60-3-5541-1533
- JOHOR BAHRU BRANCH OFFICE
- PENANG BRANCH OFFICE

CKD SINGAPORE PTE. LTD.

No.33 Tannery Lane #04-01 Hoesteel Industrial Building, Singapore 347789, Singapore
PHONE +65-67442623 FAX +65-67442486

CKD CORPORATION BRANCH OFFICE

No.33 Tannery Lane #04-01 Hoesteel Industrial Building, Singapore 347789, Singapore
PHONE +65-67447260 FAX +65-68421022

CKD THAI CORPORATION LTD.

- HEADQUARTERS
  19th Floor, Smooth Life Tower, 44 North Sathorn Road, Silom, Bangrak, Bangkok 10500, Thailand
  PHONE +66-2-267-6300 FAX +66-2-267-6304-5
- NAVANAKORN OFFICE
- EASTERN SEABOARD OFFICE
- LAMPHUN OFFICE
- KORAT OFFICE
- AMATANAKORN OFFICE
- PRACHINBURI OFFICE
- SARABURI OFFICE

台湾喜開理股份有限公司 TAIWAN CKD CORPORATION

- HEADQUARTERS
  16F-3, No. 7, Sec. 3, New Taipei Blvd., Xinzhuang Dist., New Taipei City 242, Taiwan
  PHONE +886-2-8522-8198 FAX +886-2-8522-8128
- 新竹営業所(HSINCHU OFFICE)
- 台中営業所(TAICHUNG OFFICE)
- 台南営業所(TAINAN OFFICE)
- 高雄営業所(KAOHSIUNG OFFICE)

CKD VIETNAM ENGINEERING CO.,LTD.

- HEADQUARTERS
  18th Floor, CMC Tower, Duy Tan Street, Cau Giay District, Hanoi, Vietnam
  PHONE +84-24-3795-7631 FAX +84-24-3795-7637
- HO CHI MINH OFFICE

EUROPE

CKD EUROPE B.V.

- HEADQUARTERS
  Beechavenue 125A, 1119 RB Schiphol-Rijk, the Netherlands
  PHONE +31-23-554-1490
- CKD EUROPE GERMANY OFFICE
- CKD EUROPE UK
- CKD EUROPE CZECH O.Z.

CKD CORPORATION EUROPE BRANCH

Beechavenue 125A, 1119 RB Schiphol-Rijk, the Netherlands
PHONE +31-23-554-1490

CKD ITALIA S.R.L.

Via di Fibbiana 15 Calenzano (FI) CAP 50041, Italy
PHONE +39 0558825359 FAX +39 0558827376

NORTH AMERICA & LATIN AMERICA

CKD MEXICO, S. DE R.L. DE C.V.

Cerrada la Noria No. 200 Int. A-01, Querétaro Park II, Parque Industrial Querétaro, Santa Rosa Jáuregui, Querétaro, C.P. 76220, México
PHONE +52-442-161-0624

CKD USA CORPORATION

- HEADQUARTERS
  1605 Penny Lane, Schaumburg, IL 60173, USA
  PHONE +1-847-648-4400 FAX +1-847-565-4923
- LEXINGTON OFFICE
- SAN ANTONIO OFFICE
- SAN JOSE OFFICE/ TECHNICAL CENTER
- DETROIT OFFICE
- BOSTON OFFICE

CKD Corporation

https://www.ckd.co.jp/en/

2-250 Ouji, Komaki City,
Aichi 485-8551, Japan