JAKA Robot Zu ® Series Compatible Gripper Long Stroke Type

RHLF-JK Series

With Speed Controller, Cylinder Switch
Connection Port Diameter: ø4 One-touch Fitting

For suitable detailed model No.s, please see our website.

Model No. Notation Method

RHLF - 16CS - F Y2V - JK

- RHLF: Model No.
- F: ❶ Robot Flange
- Y2V: ❷ Accessories
- JK: JAKA Robot Compatible with Zu series

❶Robot Flange

Code	Content
Blank	No Robot Flange
F	With Robot Flange

Note) Robot flange mounting bolts included

❷Accessories

Code	Content	
Blank	No Attachments	
Y2	Attachment for testing	*1
V	Directional Control Valve • Tube	*2

*1 Made of resin, so use for gripping tests. (Weight is 30 g per piece)
*2 The directional control valve is a ø4 one-touch fitting (air supply port, A/B port) with silencer (R1/R2 port) and mounting plate. Tubes are ø4 outer diameter, 2.5 m length x 2 pieces.

Specifications

Item		RHLF
Bore size	mm	ø16 × 2
Actuation method		Double Acting Type
Operating Fluid		Compressed Air
Max. Operating Pressure	MPa	0.7
Min. Working Pressure	MPa	0.2
Port Size		ø4 One-touch Fitting
Ambient Temperature	°C	5 to 50
Operating Stroke	mm	32
Repeatability	mm	±0.03
Weight	kg	1.0
Indicator LED		Blue/Green
Cylinder Switch		With T2H (Red LED ON when lit)

Note) For attachments manufactured to match)workpieces, refer to P. 568.

[Switch Specifications]

Item	Solid state 2-wire type	
	F2H	T2H
Applications	For programmable controller only	
Load Voltage/Current	10 to 30 VDC, 5 to 20 mA	
Leakage current	1 mA or less	
Shock resistance	980 m/s²	
Weight g	10	18

[Directional Control Valve (V) Specifications]

Item		4GA120R-C4-E21P-FLA28482-3-ST
Valve Type and Operation Method		Pilot Operated Soft Spool Valve
Switching Position Classification		2-position double solenoid
Max. Operating Pressure	MPa	0.7
Min. Working Pressure	MPa	0.2
Ambient Temperature	°C	-5 to 55 (No freezing)
Fluid Temperature	°C	5 to 55
Manual Override		Non-lock/Lock Common Type
Response Time	ms	9
Flow Characteristics C [dm³/ (s·bar)], b		P → A/B: C=1.2, b=0.47 A/B→R1/R2: C=0.72, b=0.37
Rated voltage	V	24 VDC
Voltage Fluctuation Range		±10%
Holding Current	A	0.017
Power Consumption	W	0.40
Surge Suppressor		Built-in
Indicator		Built-in Lamp

For other specification products, please refer to "Directional Control Valve ① (No.RJ-011AA)". Please refer to the weight listed in the switch specifications.

Outline Dimension Drawing

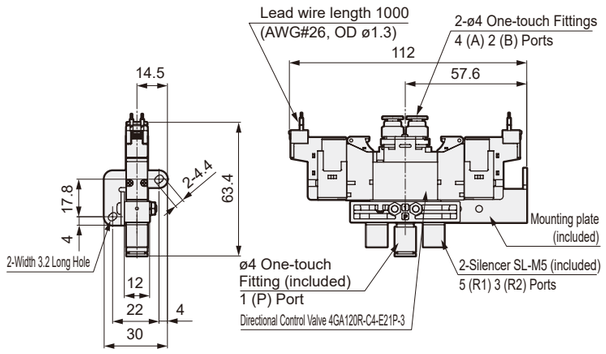

Gripping Force Performance Data

- Gripping force represents the thrust (for one finger) in the direction of the arrow shown in the figure.
- This represents the gripping force acting in the opening and closing directions at a gripper's attachment length L when the supply pressure is 0.3, 0.5, and 0.7 MPa.

Open direction (⇦), closed direction (➡) ——— (solid line)

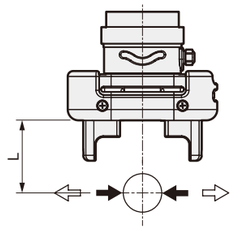

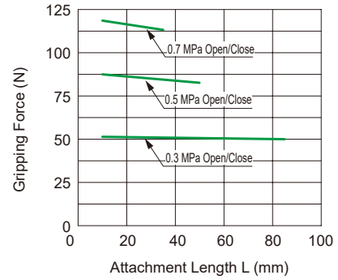
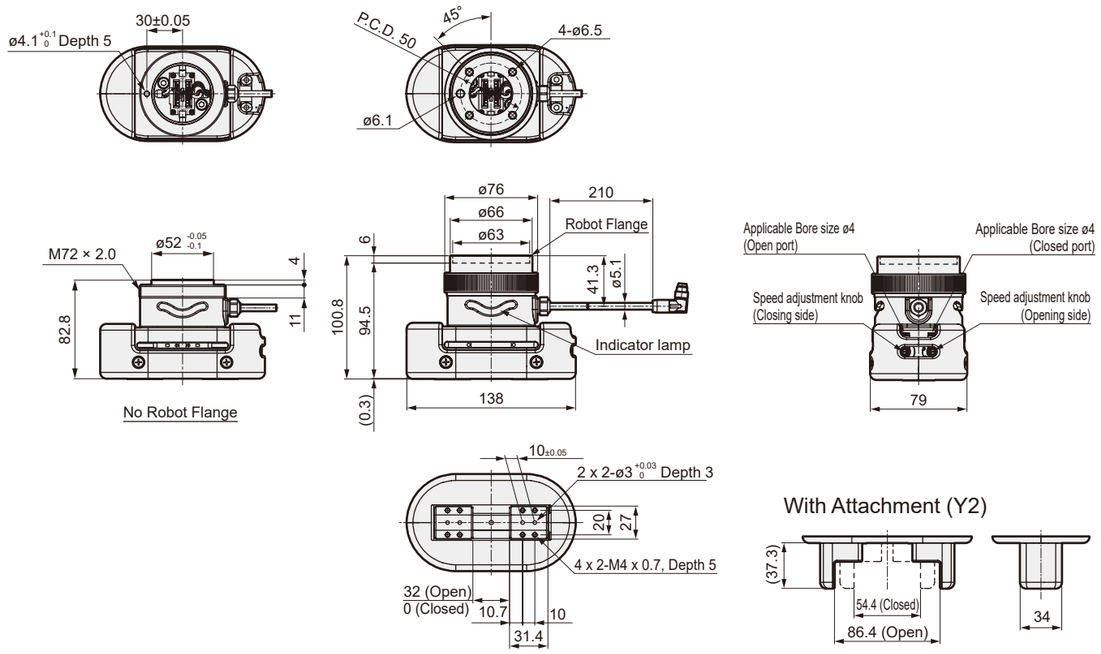
Outline Dimension Drawing