KHL

SCARA robot

CONTENTS

Product introduction	Intro Page
Series variation	2
● Specifications/How to order/Dimensions	
● KHL-300	4
● KHL-400	6
● KHL-500	8
● KHL-600	10
● KHL-700	12
● Name and internal structure of each part	14
● Option descriptions	18
● System configuration	20
⚠ Safety precautions	26

Model selection

Model No.		Arm length mm	Operating range			
			1-axis deg	2-axis deg	3-axis (Z-axis) mm	4-axis (Z-axis rotation) deg
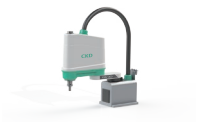	KHL-300	300 (125+175)	±125	±145	0 to 160	±360
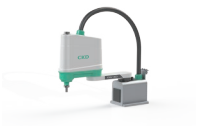	KHL-400	400 (225+175)	±125	±145	0 to 160	±360
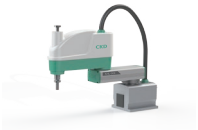	KHL-500	500 (200+300)	±125	±145	0 to 150	±360
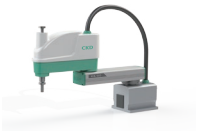	KHL-600	600 (300+300)	±125	±145	0 to 150	±360
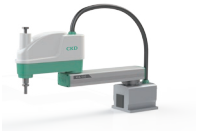	KHL-700	700 (400+300)	±125	±145	0 to 150	±360

How to order

■ Main unit + controllerv

KHL - 600 Z BNN - KSL3 P NN CC - 2 1

(A) (B) (C) (D) (E) (F) (G) (H)

(A) Arm length	
300	300
400	400
500	500
600	600
700	700

(B) Z-axis stroke	
*1 N	Standard
*2 Z	300

(C) Option	
NNN	None
*4 BNN	Lower bellows
CNN	Upper cap
*3 TNN	Ceiling mount
*3 *4 BCN	Lower bellows, top cap
*3 *4 BTN	Lower bellows, ceiling mount
*3 *4 BCT	Lower bellows, top cap, ceiling mount
*3 CTN	Top cap, ceiling mount
SCN	Simple clean-room

(D) External signal polarity	
N	N-Type (standard)
P	P-Type

(E) Robot controller cable	
NN	3.5 m (standard)
05	5 m
08	8 m
10	10 m
15	15 m

(F) Network	
NN	None
CC	CC-Link
DN	DeviceNet
PB	PROFIBUS
EN	EtherNet/IP
EC	EtherCAT
PN	PROFINET

(G) Expansion IO unit	
N	0 units
1	1 units
2	2 units

(H) IO cable *6	
N	None
1	1 set
2	2 set
3	3 set

*1 KHL-300/400 has 160 strokes, and 500/600/700 has 150 strokes.
*2 Does not support KHL-300/400.
*3 Does not support KHL-300.
*4 KHL-TF (tool flange) is also required.
*5 A unit with 28 inputs and 20 outputs.
*6 A 2-piece set with 6m cable length.

	Max. speed *1					*2 Cycle time (2 kg load) s	Max. load capacity (Rating) kg	Allowable moment of inertia kg/m²	Listed Page
	1-axis deg/s	2-axis deg/s	3-axis (Z-axis) mm/s	4-axis (Z-axis rotation) deg/s	Synthesis m/s				
	660	660	1120	1500	5.1	0.48	5 (2)	0.05	4
	660	660	1120	1500	6.3	0.47	5 (2)	0.05	6
	450	450	2000	1700	6.3	0.45	10 (2)	0.2	8
	450	450	2000	1700	7.1	0.45	10 (2)	0.2	10
	450	450	2000	1700	7.9	0.50	10 (2)	0.2	12

*1 There are restrictions on speed and acceleration depending on the operation pattern, load weight and degree of offset.
*2 300 mm in horizontal direction, 25 mm in vertical direction (reciprocating), rough positioning. Continuous operation exceeding the effective load factor is not allowed.

Option list

Model No.	Z-axis long stroke length	Z-axis bottom bellows	Z-axis top cap	Ceiling mount specifications	Cable extension (longest)	For mounting hand tool flange	Simple clean-room
KHL-300	X	OK	OK	X	15 m	OK	OK
KHL-400	X	OK	OK	OK	15 m	OK	OK
KHL-500	OK (300 mm)	OK	OK	OK	15 m	OK	OK
KHL-600	OK (300 mm)	OK	OK	OK	15 m	OK	OK
KHL-700	OK (300 mm)	OK	OK	OK	15 m	OK	OK

OK: Compatible X: Not compatible

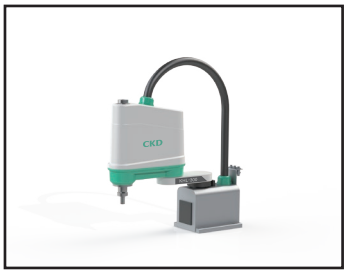

SCARA robot

KHL-300

● Arm length: 300 mm (125 mm + 175 mm)

How to order

KHL - 300 (A) N (B) NNN (C) - KSL3 N (D) NN (E) NN (F) - N (G) N (H)

Ⓐ Arm length

300 mm

Ⓑ Z-axis stroke

*1	N	Standard

Ⓒ Option

	NNN	None
*4	BNN	Lower bellows
	CNN	Upper cap
	SCN	Simple clean-room

Ⓓ External signal polarity

N	N-Type (standard)
P	P-Type

Ⓔ Robot controller cable

NN	3.5 m (standard)
05	5 m
08	8 m
10	10 m
15	15 m

Ⓕ Network

NN	None
CC	CC-Link
DN	DeviceNet
PB	PROFIBUS
EN	EtherNet/IP
EC	EtherCAT
PN	PROFINET

Ⓖ Expansion IO unit

*2	N	0 units
	1	1 units
	2	2 units

Ⓗ IO cable

	N	None
*3	1	1 set
	2	2 set
	3	3 set

*1 160 stroke.
*2 A unit with 28 inputs and 20 outputs.
*3 A 2-piece set with 6 m cable length.
*4 KHL-TF (tool flange) is also required.

Product subject to the EAR (EAR99)

Specifications

Model No.			KHL-300
Type			Horizontal articulation
Number of axes			4
Arm length		mm	300 (125+175)
Operating range	1-axis	deg	±125
	2-axis	deg	±145
	3-axis (Z-axis)	mm	0 to 160
	4-axis (Z-axis rotation)	deg	±360
Max. speed	1-axis	deg/s	660
	2-axis	deg/s	660
	3-axis (Z-axis)	mm/s	1120
	4-axis (Z-axis rotation)	deg/s	1500
*1	Synthesis	m/s	5.1
Cycle time (2kg load) *2		s	0.48
Max. load capacity		kg	5 (Rating 2)
Allowable moment of inertia		$kg \cdot m^2$	0.05
Position repeat Accuracy *3	X-Y	mm	±0.01
	Z (3-axis)	mm	±0.015
	4-axis (Z-axis rotation)	deg	±0.007
Hand wiring			8 input points/8 output points
Hand fitting *4			ø4 x 3 pcs
Position detection method			Absolute method
Robot controller cable		m	3.5
Power capacity		kVA	0.7
Body weight		kg	12

*1 There are restrictions on speed and acceleration depending on the operation pattern, load weight and degree of offset.
*2 300 mm in horizontal direction, 25 mm in vertical direction (reciprocating), rough positioning. Continuous operation exceeding the effective load factor is not allowed.
*3 One-way positioning repeatability when the ambient temperature and airframe temperature are constant. Not the absolute positioning accuracy. For X-Y and C, the values are at the Z upper limit. The track accuracy is not guaranteed.
*4 A fitting for hand piping is available on the base side. Customers are responsible for piping.

Dimensions

● KHL-300

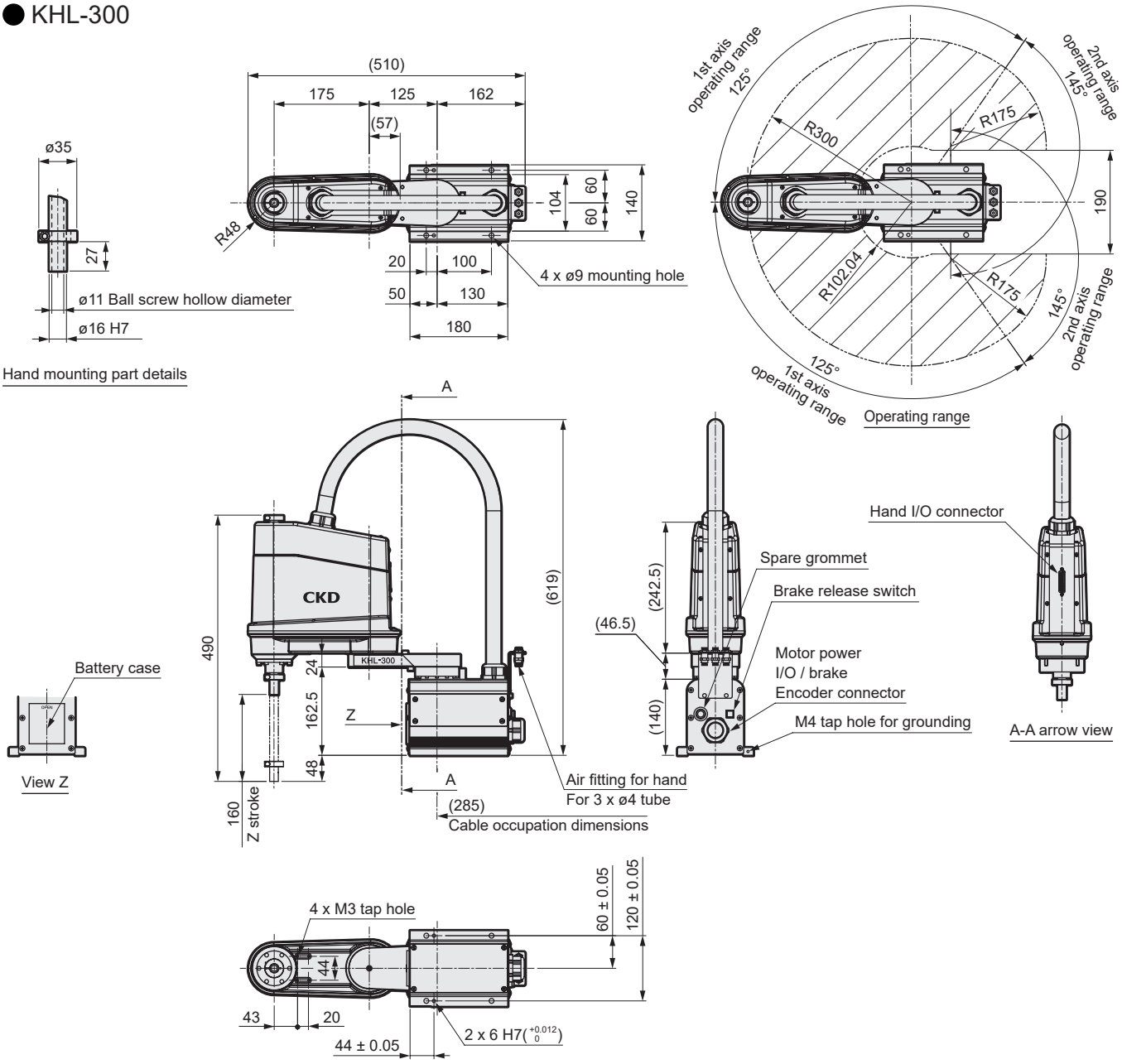

Optional dimensions

● Tool flange

Model No.: KHL-TF3

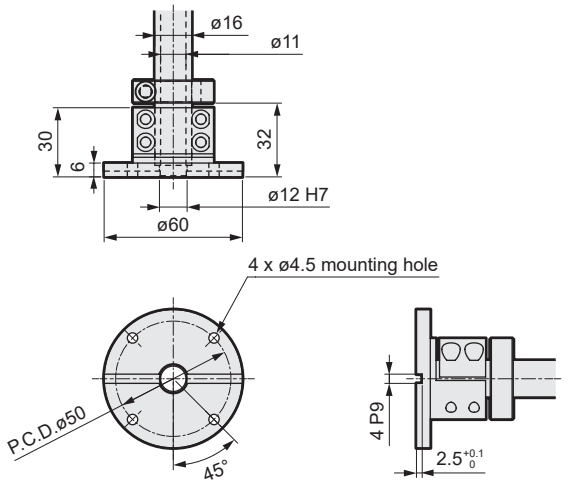

● Bellows

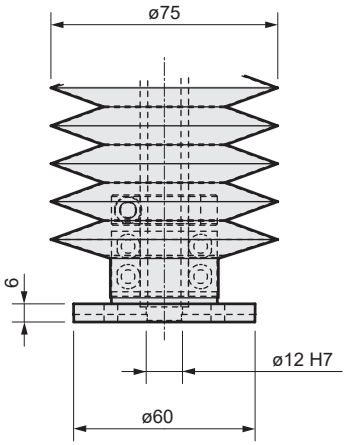

Note: When ordering the SCARA robot body and the tool flange at the same time, the tool flange will be "assembled at shipment".

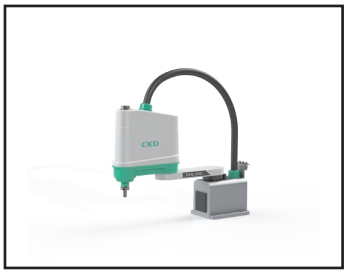

SCARA robot

KHL-400

● Arm length: 400 mm (225 mm + 175 mm)

How to order

KHL - 400 (A) N (B) NNN (C) - KSL3 N (D) NN (E) NN (F) - N (G) N (H)

(A) Arm length

400 mm

(B) Z-axis stroke

*1	N	Standard

(C) Option

	NNN	None
*5	BNN	Lower bellows
	CNN	Upper cap
	TNN	Ceiling mount
*2	BCN	Lower bellows, top cap
*2	BTN	Lower bellows, ceiling mount
*2	BCT	Lower bellows, top cap, ceiling mount
	CTN	Top cap, ceiling mount
	SCN	Simple clean-room

(D) External signal polarity

N	N-Type (standard)
P	P-Type

(E) Robot controller cable

NN	3.5 m (standard)
05	5 m
08	8 m
10	10 m
15	15 m

(F) Network

NN	None
CC	CC-Link
DN	DeviceNet
PB	PROFIBUS
EN	EtherNet/IP
EC	EtherCAT
PN	PROFINET

(G) Expansion IO unit *3

N	0 units
1	1 units
2	2 units

(H) IO cable *4

N	None
1	1 set
2	2 set
3	3 set

*1 160 stroke.
*2 KHL-TF (tool flange) is also required.
*3 A unit with 28 inputs and 20 outputs.
*4 A 2-piece set with 6 m cable length.
*5 KHL-TF (tool flange) is also required.

Product subject to the EAR (EAR99)

Specifications

Model No.			KHL-400
Type			Horizontal articulation
Number of axes			4
Arm length		mm	400 (225+175)
Operating range	1-axis	deg	±125
	2-axis	deg	±145
	3-axis (Z-axis)	mm	0 to 160
	4-axis (Z-axis rotation)	deg	±360
Max. speed	1-axis	deg/s	660
	2-axis	deg/s	660
	3-axis (Z-axis)	mm/s	1120
	4-axis (Z-axis rotation)	deg/s	1500
*1	Synthesis	m/s	6.3
Cycle time (2kg load) *2		s	0.47
Max. load capacity		kg	5 (Rating 2)
Allowable moment of inertia		$kg \cdot m^2$	0.05
Position repeat Accuracy *3	X-Y	mm	±0.01
	Z (3-axis)	mm	±0.015
	4-axis (Z-axis rotation)	deg	±0.007
Hand wiring			8 input points/8 output points
Hand fitting *4			ø4 x 3 pcs
Position detection method			Absolute method
Robot controller cable		m	3.5
Power capacity		kVA	0.7
Body weight		kg	13

*1 There are restrictions on speed and acceleration depending on the operation pattern, load weight and degree of offset.
*2 300 mm in horizontal direction, 25 mm in vertical direction (reciprocating), rough positioning. Continuous operation exceeding the effective load factor is not allowed.
*3 One-way positioning repeatability when the ambient temperature and airframe temperature are constant. Not the absolute positioning accuracy. For X-Y and C, the values are at the Z upper limit. The track accuracy is not guaranteed.
*4 A fitting for hand piping is available on the base side. Customers are responsible for piping.

Dimensions

● KHL-400

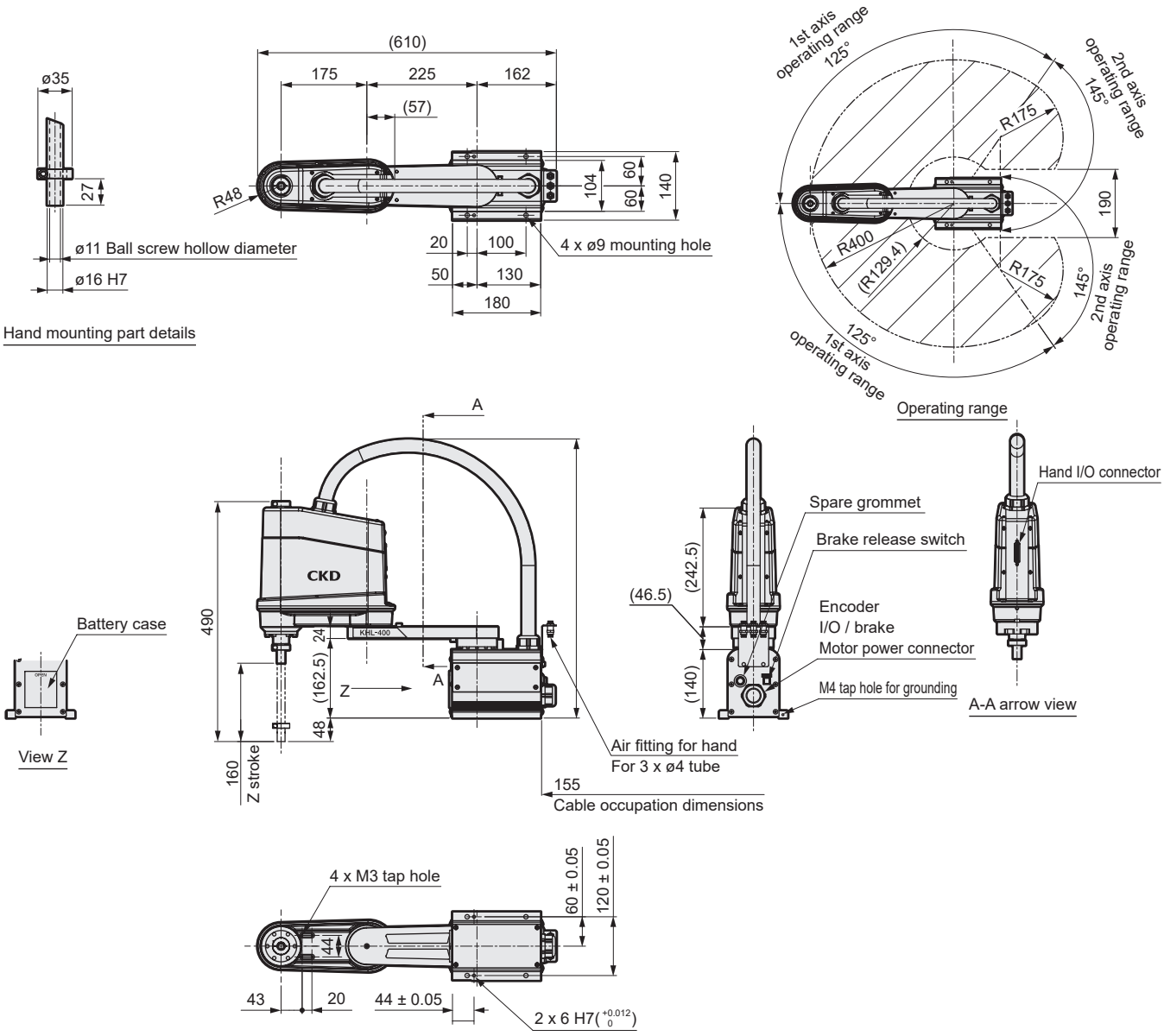

Optional dimensions

● Tool flange

Model No.: KHL-TF3

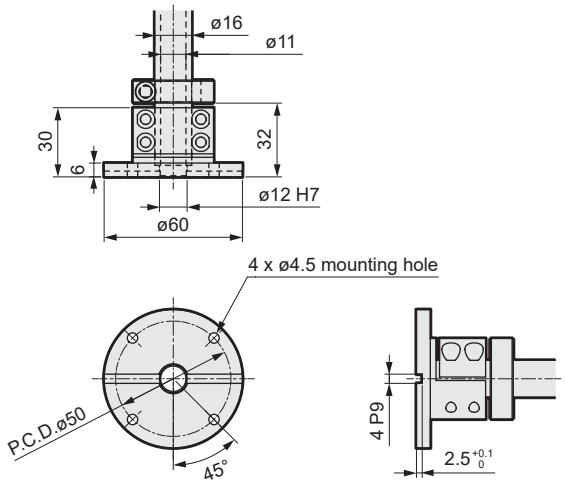

● Bellows

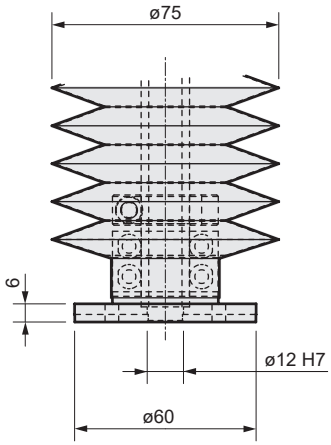

Note: When ordering the SCARA robot body and the tool flange at the same time, the tool flange will be "assembled at shipment".

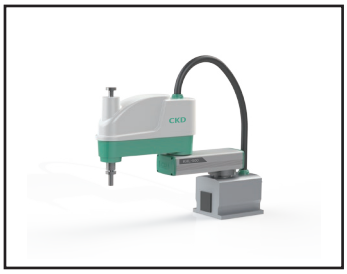

SCARA robot

KHL-500

● Arm length: 500 mm (200 mm + 300 mm)

How to order

KHL - 500 N NNN - KSL3 N NN NN - N N

(A) (B) (C) (D) (E) (F) (G) (H)

(A) Arm length

500 mm

(B) Z-axis stroke

*1	N	Standard
	Z	300

(C) Option

	NNN	None
*5	BNN	Lower bellows
	CNN	Upper cap
	TNN	Ceiling mount
*2	BCN	Lower bellows, top cap
*2	BTN	Lower bellows, ceiling mount
*2	BCT	Lower bellows, top cap, ceiling mount
	CTN	Top cap, ceiling mount
	SCN	Simple clean-room

(D) External signal polarity

N	N-Type (standard)
P	P-Type

(E) Robot controller cable

NN	3.5 m (standard)
05	5 m
08	8 m
10	10 m
15	15 m

(F) Network

NN	None
CC	CC-Link
DN	DeviceNet
PB	PROFIBUS
EN	EtherNet/IP
EC	EtherCAT
PN	PROFINET

(G) Expansion IO unit *3

N	0 units
1	1 units
2	2 units

(H) IO cable *4

N	None
1	1 set
2	2 set
3	3 set

*1 150 stroke.
*2 KHL-TF (tool flange) is also required.
*3 A unit with 28 inputs and 20 outputs.
*4 A 2-piece set with 6 m cable length.
*5 KHL-TF (tool flange) is also required.

Product subject to the EAR (EAR99)

Specifications

Model No.			KHL-500
Type			Horizontal articulation
Number of axes			4
Arm length		mm	500 (200+300)
Operating range	1-axis	deg	±125
	2-axis	deg	±145
	3-axis (Z-axis)	mm	0 to 150
	4-axis (Z-axis rotation)	deg	±360
Max. speed	1-axis	deg/s	450
	2-axis	deg/s	450
	3-axis (Z-axis)	mm/s	2000
	4-axis (Z-axis rotation)	deg/s	1700
*1	Synthesis	m/s	6.3
Cycle time (2kg load) *2		s	0.45
Max. load capacity		kg	10 (Rating 2)
Allowable moment of inertia		$kg \cdot m^2$	0.2
Position repeat Accuracy *3	X-Y	mm	±0.01
	Z (3-axis)	mm	±0.015
	4-axis (Z-axis rotation)	deg	±0.007
Hand wiring			8 input points/8 output points
Hand fitting *4			ø6 x 3 pcs
Position detection method			Absolute method
Robot controller cable		m	3.5
Power capacity		kVA	1.4
Body weight		kg	22

*1 There are restrictions on speed and acceleration depending on the operation pattern, load weight and degree of offset.
*2 300 mm in horizontal direction, 25 mm in vertical direction (reciprocating), rough positioning. Continuous operation exceeding the effective load factor is not allowed.
*3 One-way positioning repeatability when the ambient temperature and airframe temperature are constant. Not the absolute positioning accuracy. For X-Y and C, the values are at the Z upper limit. The track accuracy is not guaranteed.
*4 A fitting for hand piping is available on the base side. Customers are responsible for piping.

Dimensions

● KHL-500

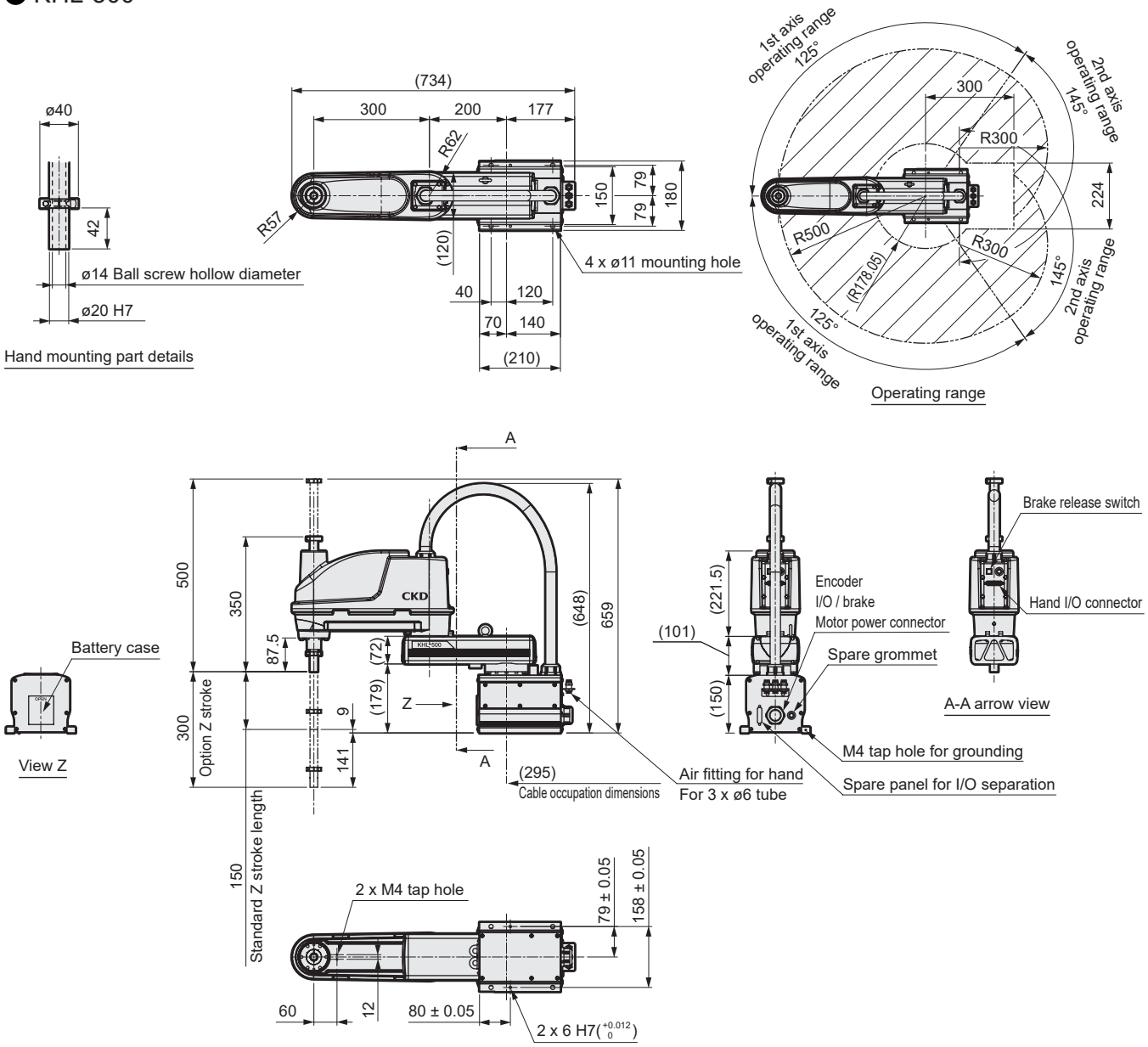

Optional dimensions

● Tool flange

Model No.: KHL-TF5

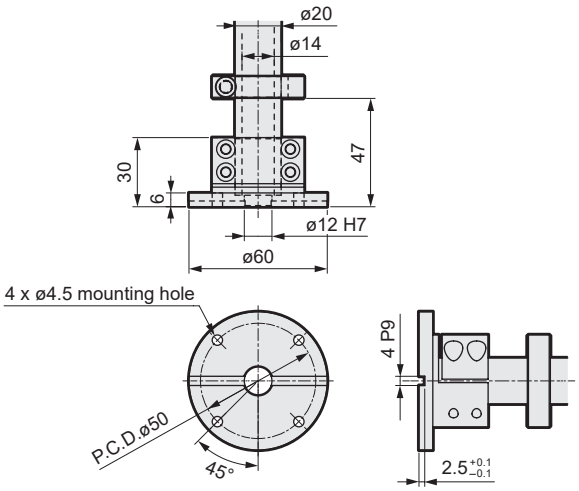

● Bellows

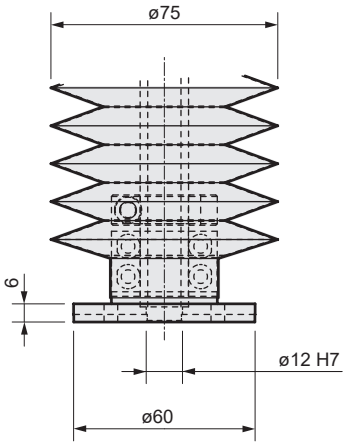

Note: When ordering the SCARA robot body and the tool flange at the same time, the tool flange will be "assembled at shipment".

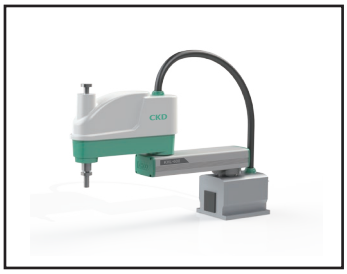

SCARA robot

KHL-600

●Arm length: 600 mm (300 mm + 300 mm)

How to order

KHL - 600 (A) N (B) NNN (C) - KSL3 N (D) NN (E) NN (F) - N (G) N (H)

(A) Arm length

600 mm

(B) Z-axis stroke

*1	N	Standard
	Z	300

(C) Option

	NNN	None
*5	BNN	Lower bellows
	CNN	Upper cap
	TNN	Ceiling mount
*2	BCN	Lower bellows, top cap
*2	BTN	Lower bellows, ceiling mount
*2	BCT	Lower bellows, top cap, ceiling mount
	CTN	Top cap, ceiling mount
	SCN	Simple clean-room

(D) External signal polarity

N	N-Type (standard)
P	P-Type

(E) Robot controller cable

NN	3.5 m (standard)
05	5 m
08	8 m
10	10 m
15	15 m

(F) Network

NN	None
CC	CC-Link
DN	DeviceNet
PB	PROFIBUS
EN	EtherNet/IP
EC	EtherCAT
PN	PROFINET

(G) Expansion IO unit *3

N	0 units
1	1 units
2	2 units

(H) IO cable *4

N	None
1	1 set
2	2 set
3	3 set

*1 150 stroke.
*2 KHL-TF (tool flange) is also required.
*3 A unit with 28 inputs and 20 outputs.
*4 A 2-piece set with 6 m cable length.
*5 KHL-TF (tool flange) is also required.

Product subject to the EAR (EAR99)

Specifications

Model No.			KHL-600
Type			Horizontal articulation
Number of axes			4
Arm length		mm	600 (300+300)
Operating range	1-axis	deg	±125
	2-axis	deg	±145
	3-axis (Z-axis)	mm	0 to 150
	4-axis (Z-axis rotation)	deg	±360
Max. speed	1-axis	deg/s	450
	2-axis	deg/s	450
	3-axis (Z-axis)	mm/s	2000
	4-axis (Z-axis rotation)	deg/s	1700
*1	Synthesis	m/s	7.1
Cycle time (2kg load) *2		s	0.45
Max. load capacity		kg	10 (Rating 2)
Allowable moment of inertia		$kg \cdot m^2$	0.2
Position repeat Accuracy *3	X-Y	mm	±0.01
	Z (3-axis)	mm	±0.015
	4-axis (Z-axis rotation)	deg	±0.007
Hand wiring			8 input points/8 output points
Hand fitting *4			ø6 x 3 pcs
Position detection method			Absolute method
Robot controller cable		m	3.5
Power capacity		kVA	1.4
Body weight		kg	23

*1 There are restrictions on speed and acceleration depending on the operation pattern, load weight and degree of offset.
*2 300 mm in horizontal direction, 25 mm in vertical direction (reciprocating), rough positioning. Continuous operation exceeding the effective load factor is not allowed.
*3 One-way positioning repeatability when the ambient temperature and airframe temperature are constant. Not the absolute positioning accuracy. For X-Y and C, the values are at the Z upper limit. The track accuracy is not guaranteed.
*4 A fitting for hand piping is available on the base side. Customers are responsible for piping.

Dimensions

● KHL-600

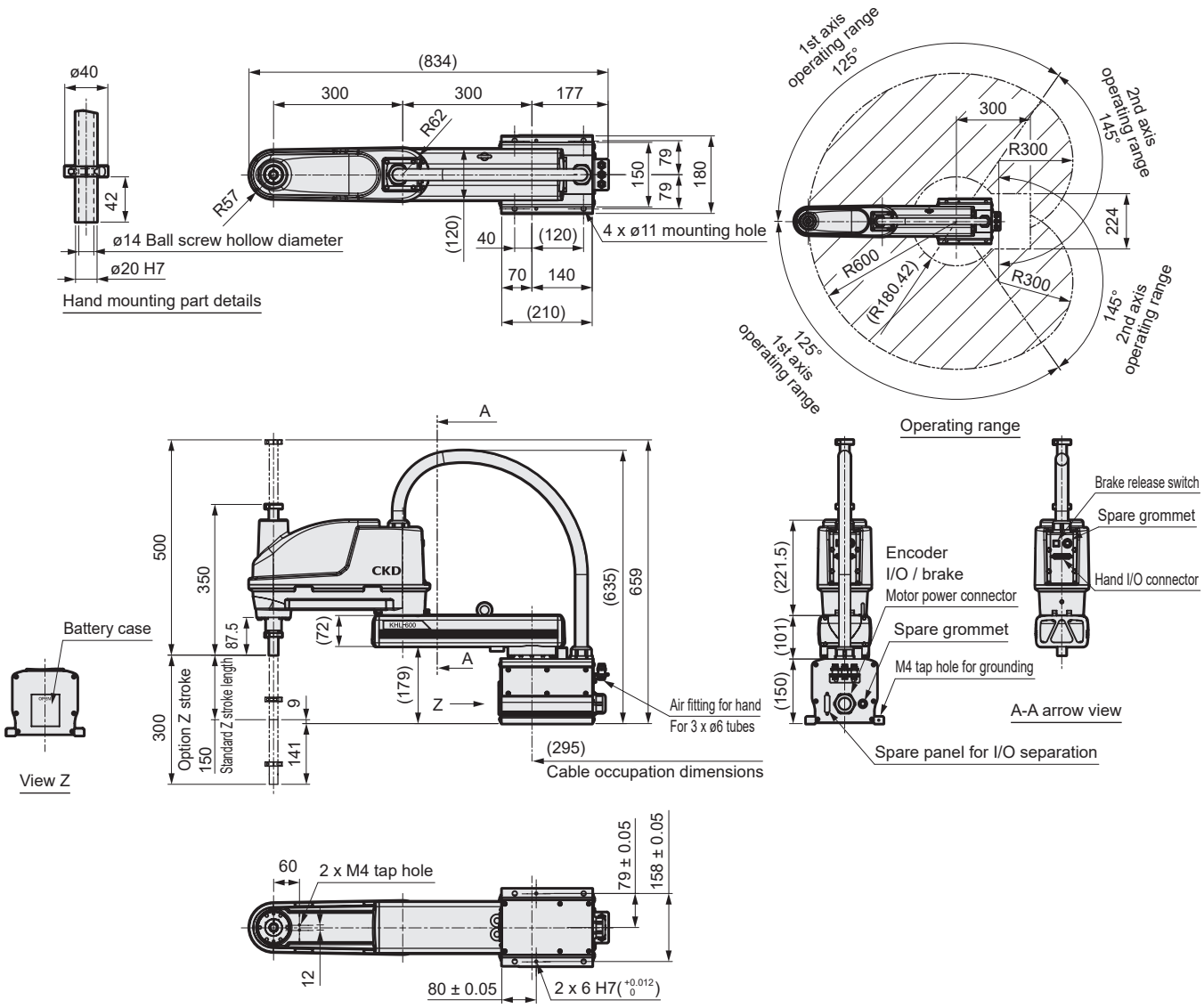

Optional dimensions

● Tool flange

Model No.: KHL-TF5

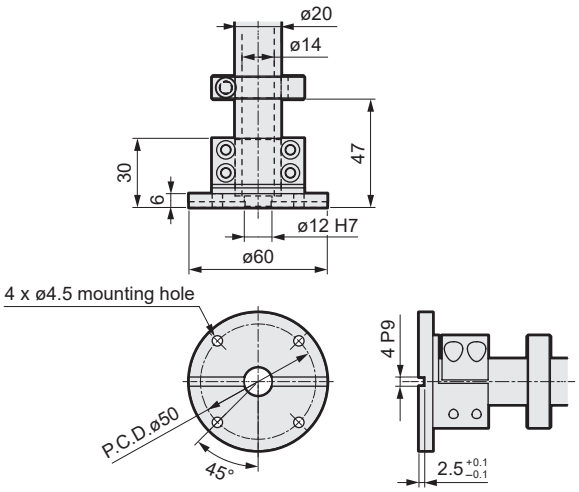

● Bellows

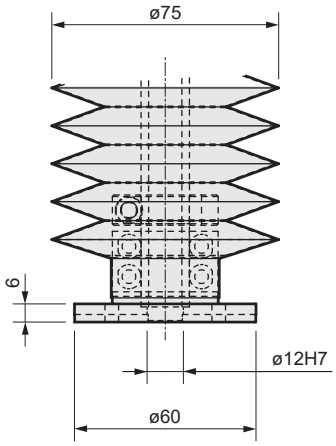

Note: When ordering the SCARA robot body and the tool flange at the same time, the tool flange will be "assembled at shipment".

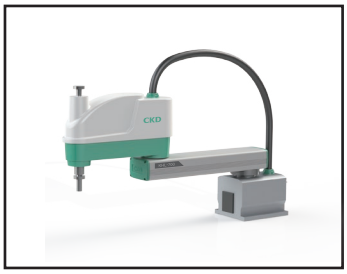

SCARA robot

KHL-700

●Arm length: 700 mm (400 mm + 300 mm)

How to order

KHL - 700 (A) N (B) NNN (C) - KSL3 N (D) NN (E) NN (F) - N (G) N (H)

(A) Arm length

700 mm	

(B) Z-axis stroke

*1	N	Standard
	Z	300

(C) Option

	NNN	None
*5	BNN	Lower bellows
	CNN	Upper cap
	TNN	Ceiling mount
*2	BCN	Lower bellows, top cap
*2	BTN	Lower bellows, ceiling mount
*2	BCT	Lower bellows, top cap, ceiling mount
	CTN	Top cap, ceiling mount
	SCN	Simple clean-room

(D) External signal polarity

N	N-Type (standard)
P	P-Type

(E) Robot controller cable

NN	3.5 m (standard)
05	5 m
08	8 m
10	10 m
15	15 m

(F) Network

NN	None
CC	CC-Link
DN	DeviceNet
PB	PROFIBUS
EN	EtherNet/IP
EC	EtherCAT
PN	PROFINET

(G) Expansion IO unit *3

N	0 units
1	1 units
2	2 units

(H) IO cable *4

N	None
1	1 set
2	2 set
3	3 set

*1 150 stroke.
*2 KHL-TF (tool flange) is also required.
*3 A unit with 28 inputs and 20 outputs.
*4 A 2-piece set with 6 m cable length.
*5 KHL-TF (tool flange) is also required.

Product subject to the EAR (EAR99)

Specifications

Model No.			KHL-700
Type			Horizontal articulation
Number of axes			4
Arm length		mm	700 (400+300)
Operating range	1-axis	deg	±125
	2-axis	deg	±145
	3-axis (Z-axis)	mm	0 to 150
	4-axis (Z-axis rotation)	deg	±360
Max. speed	1-axis	deg/s	450
	2-axis	deg/s	450
	3-axis (Z-axis)	mm/s	2000
	4-axis (Z-axis rotation)	deg/s	1700
*1	Synthesis	m/s	7.9
Cycle time (2kg load) *2		s	0.50
Max. load capacity		kg	10 (Rating 2)
Allowable moment of inertia		$kg \cdot m^2$	0.2
Position repeat Accuracy *3	X-Y	mm	±0.01
	Z (3-axis)	mm	±0.015
	4-axis (Z-axis rotation)	deg	±0.007
Hand wiring			8 input points/8 output points
Hand fitting *4			ø6 x 3 pcs
Position detection method			Absolute method
Robot controller cable		m	3.5
Power capacity		kVA	1.4
Body weight		kg	24

*1 There are restrictions on speed and acceleration depending on the operation pattern, load weight and degree of offset.
*2 300 mm in horizontal direction, 25 mm in vertical direction (reciprocating), rough positioning. Continuous operation exceeding the effective load factor is not allowed.
*3 One-way positioning repeatability when the ambient temperature and airframe temperature are constant. Not the absolute positioning accuracy. For X-Y and C, the values are at the Z upper limit. The track accuracy is not guaranteed.
*4 A fitting for hand piping is available on the base side. Customers are responsible for piping.

Dimensions

● KHL-700

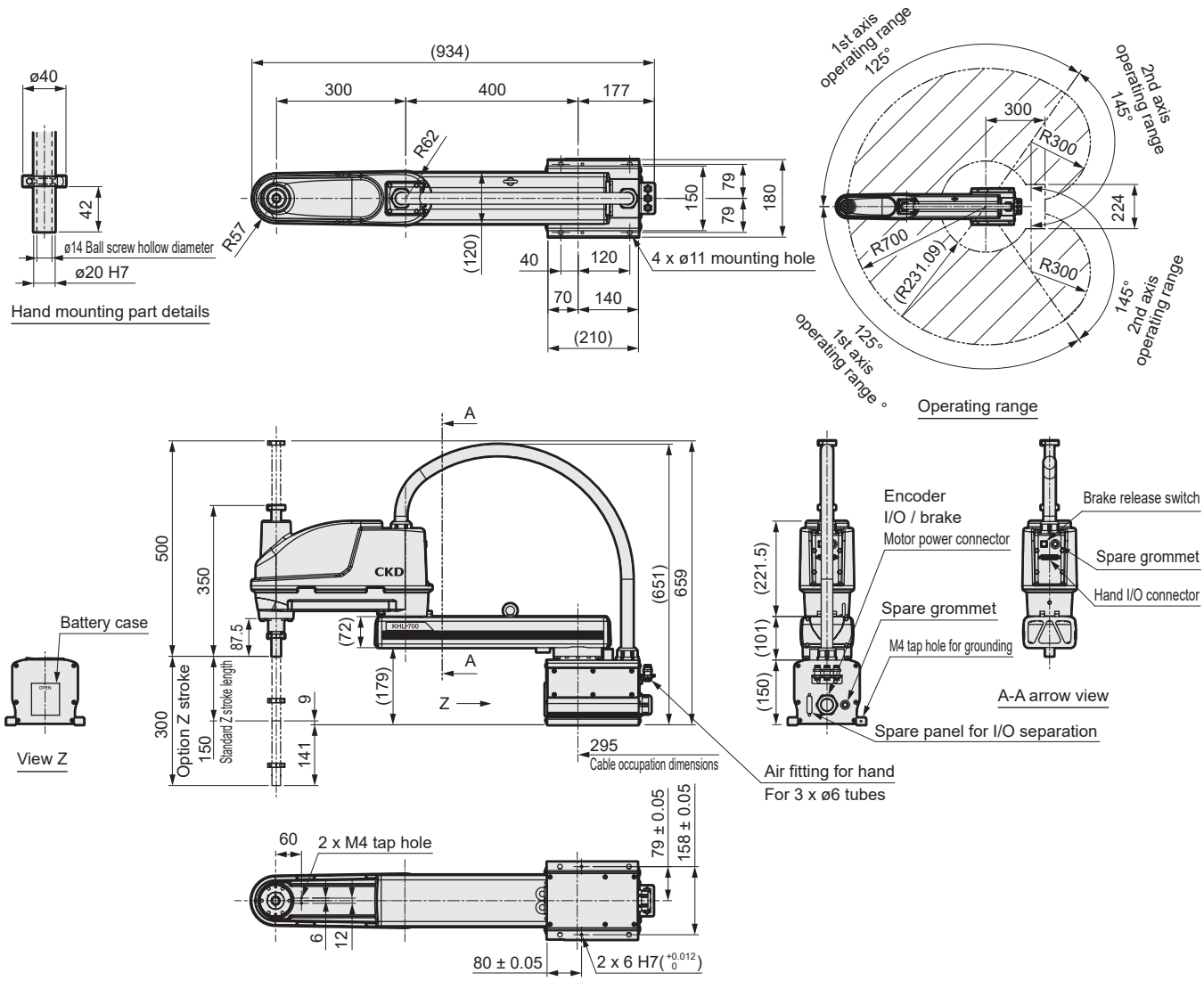

Optional dimensions

● Tool flange

Model No.: KHL-TF5

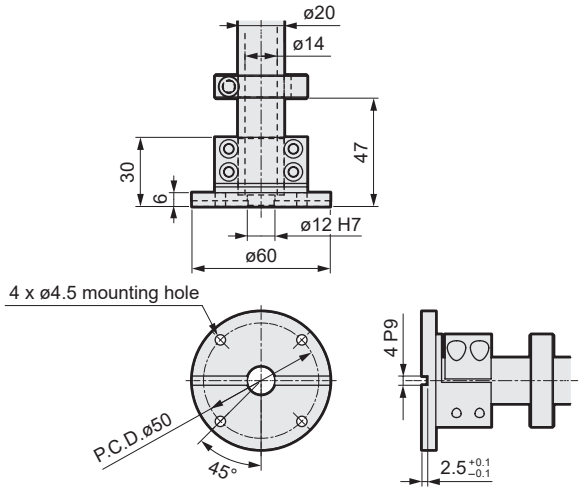

● Bellows

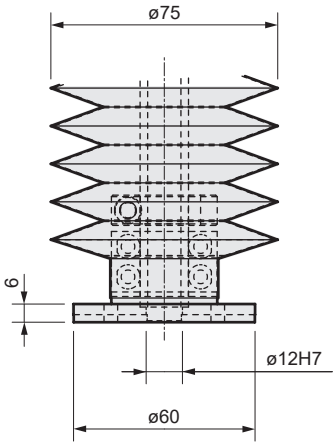

Note: When ordering the SCARA robot body and the tool flange at the same time, the tool flange will be "assembled at shipment".

Section names

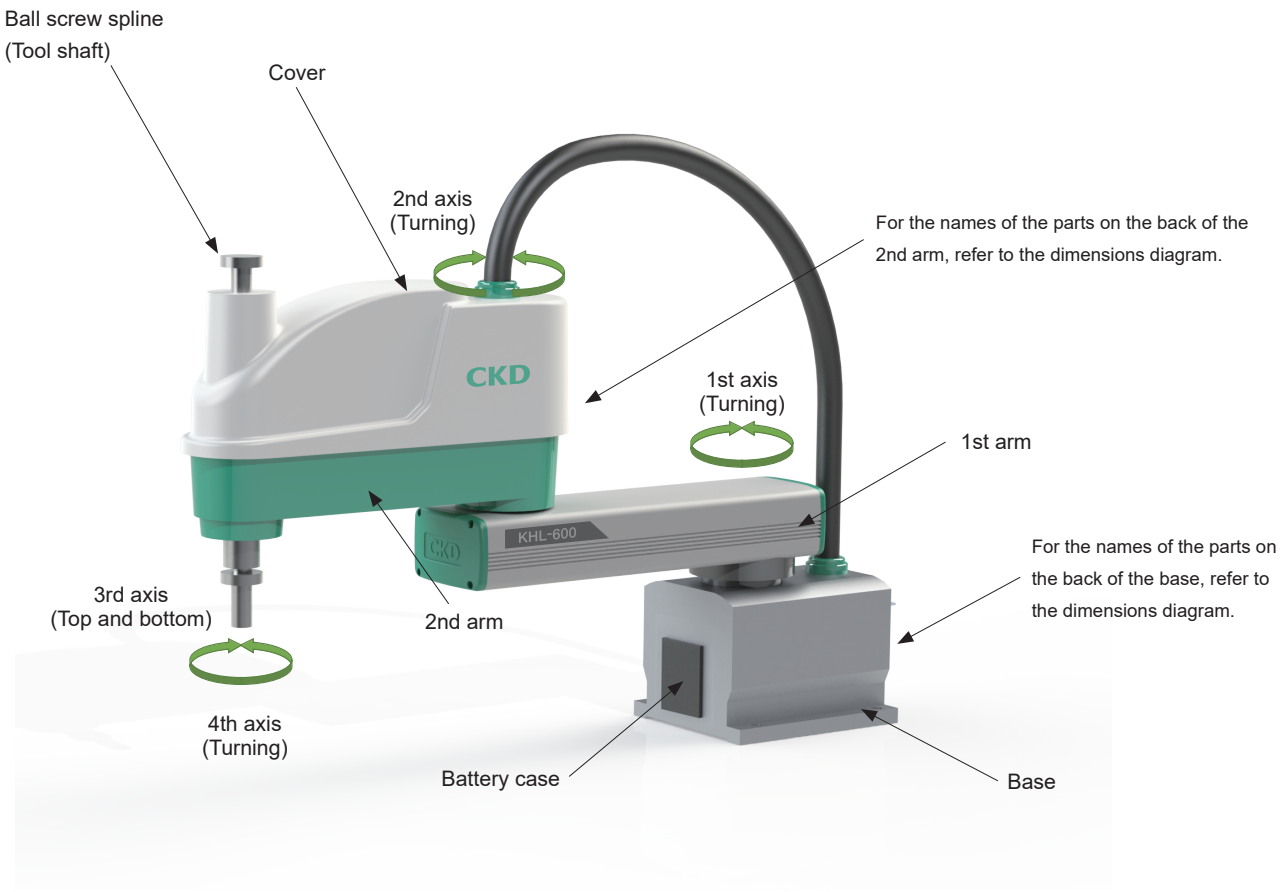
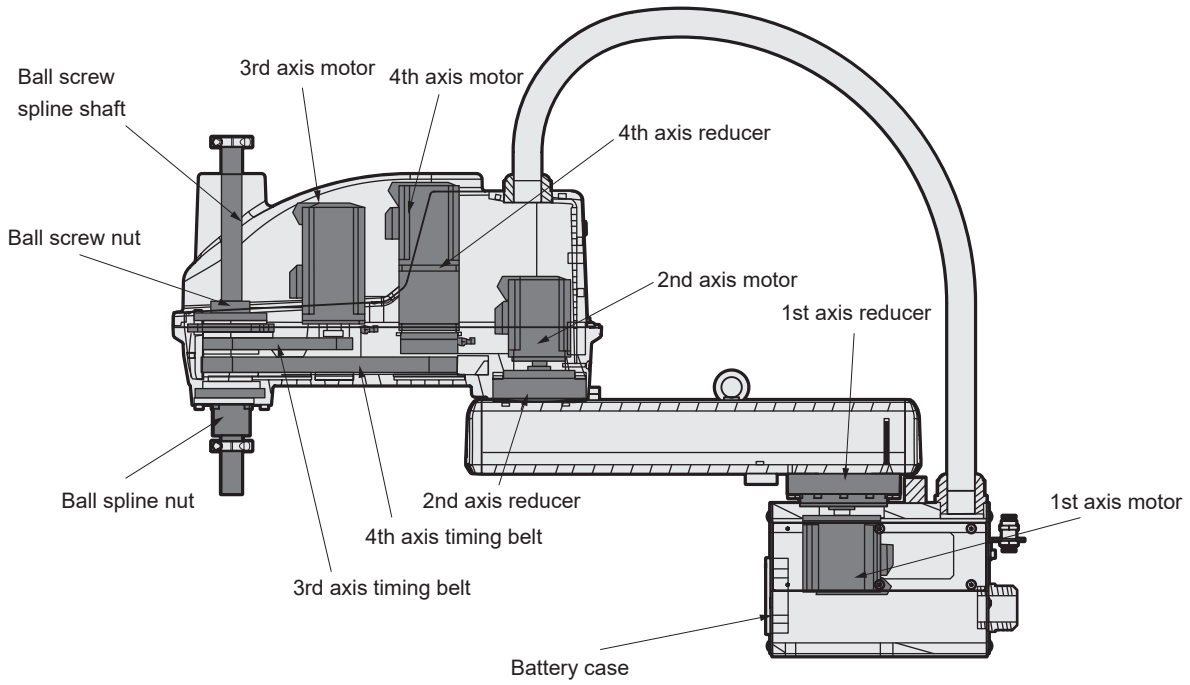
Internal structure