CKD

GCKW Series
Electric Actuator

Gripper 3 Finger Type

INSTRUCTION MANUAL

Read this Instruction Manual before using the product.
In particular, read the safety notes carefully.
Keep this Instruction Manual safe for use at any time.



2025-07-28 SM-A69875-A/3

PREFACE

Thank you for purchasing CKD's "GCKW Series" electric actuator.

The GCKW series (gripper three-finger type) can support a wide variety of workpieces because of multi-point positioning and allows the speed and pressing force to be set, thus being capable of soft handling without giving an impact to a workpiece.

This Instruction Manual describes basic matters related to the operation of this product in order to fully demonstrate its performance. Please read this Instruction Manual thoroughly and use the product properly.
Keep this Instruction Manual in a safe place and be careful not to lose it.

Product specifications and appearances presented in this Instruction Manual are subject to change without notice.

SAFETY INFORMATION

When designing and manufacturing any device incorporating the product, the manufacturer has an obligation to ensure that the device is safe. To that end, make sure that the safety of the machine mechanism of the device and the electric system that controls such mechanism is ensured.
Ensure to observe organization’s standards, laws and regulations etc. for safety related to design and management of the equipment.
In order to use our products safely, it is important to select, use, handle, and maintain the products properly.
Observe the warnings and precautions described in this Instruction Manual to ensure device safety.
Various safety measures have been taken for the product, but handling that is not described in this Instruction Manual may cause an accident. Thoroughly read and understand this Instruction Manual before using the product.

To explicitly indicate the severity and likelihood of a potential harm or damage, precautions are classified into three categories: "DANGER", "WARNING", and "CAUTION".

DANGER	Indicates an imminent hazard. Improper handling will cause death or serious injury to people.
WARNING	Indicates a potential hazard. Improper handling may cause death or serious injury to people.
CAUTION	Indicates a potential hazard. Improper handling may cause injury to people or damage to property.

Precautions classified as "CAUTION" may still lead to serious results depending on the situation.
All precautions are equally important and must be observed.

< Warning symbol type >

	A general purpose mark indicating prohibited (not allowed) actions.		A mark that prohibits touching equipment.
	A mark that prohibits the act of putting a finger.		A general purpose mark indicating the danger such as electric shock and burn.
	A mark indicating the danger that occurs when an automatic equipment is started.		A general purpose mark indicating what you must do.
	A mark instructing you to carefully read the Instruction Manual.		A mark instructing the connection of the ground wire.

In addition, the following icons indicate general precautions, usage tips, or technical information or glossary.



- Contains useful information such as general precautions, supplementary information, and reference information.



- Contains detailed information and tips on how to use it in a practical way.



- Contains technical information and glossary that you should know when using the function.

Precautions on Product Use

DANGER

Do not use this product for the following applications.

- Medical equipment pertaining to sustainment and management of human life and body
- Mechanism and mechanical device for transferring and transporting people
- Critical parts for securing safety in a mechanical device

WARNING

Never modify or implement additional processing to the product.

- Modification or additional processing may not only pose a risk of fire or electric shock, but may not satisfy the specifications described in this Instruction Manual.

Never handle the product, install or remove the equipment until safety is confirmed.

- Check and maintain the machinery and equipment only after confirming that all systems related to the product are safe. In addition, be careful not to get an electric shock by turning off the power of the device or the power of the corresponding equipment.
- Even after the operation is stopped, as there may be high-temperature parts or charging parts, carefully handle the product, and install or remove the equipment.

The product must be handled by the person who has sufficient knowledge and experience.

- This product is designed and manufactured as general industrial machinery equipment and parts, so please handle with care.

Use the product within the specifications.

- It cannot be used outside of product-specific specifications.
- Since this product is intended to use in general industrial machinery equipment and parts, it is not applicable when used in the following conditions. It will be applicable if you consult with our company at the time of its adoption and understand the specifications of our company's product. However, even in such a case, take safety measures to avoid danger in case of failure.
  - ◎ Use under conditions and environments other than those specified, and outdoor use.
  - ◎ Use in equipment and applications that come into direct contact with nuclear power, railways, aviation, ships, vehicles, medical equipment, beverages and food.
  - ◎ Use in applications requiring safety, such as recreational equipment, emergency shut off circuits, press machines, brake circuits, and safety measures.
  - ◎ Use in applications that are expected to have a significant impact on people and property and require special safety.

CONTENTS

PREFACE 2

SAFETY INFORMATION 3

Precautions on Product Use 5

CONTENTS 6

1. PRODUCT OVERVIEW 7

1.1. System Structure 7

1.1.1. System structure 7

1.2. Instruction Manuals Related to This Product 11

1.3. Part Name 12

1.4. Model Number Indication 13

1.4.1. Actuator 13

1.4.2. Motor/encoder relay cable (fixed/movable) 16

2. INSTALLATION 17

2.1. Installation Environment 23

2.2. Unpacking 24

2.2.1. Parts of the product 24

2.3. Installing 25

2.3.1. Actuator 25

2.3.2. Finger 26

3. USAGE 27

3.1. Using the Controller 31

3.2. Manual Operation 32

4. MAINTENANCE AND INSPECTION 33

4.1. Periodic Inspection 34

4.1.1. Inspection item 34

4.2. Precautions on Product Disposal 35

5. TROUBLESHOOTING 36

5.1. Problems, Causes, and Solutions 36

5.1.1. Items to check when trouble occurs 39

6. WARRANTY PROVISIONS 40

6.1. Warranty Conditions 40

6.2. Warranty Period 40

7. Reference Information 41

7.1. Specifications 41

7.2. Cable specifications 42

Index 43

Glossary 44

1. PRODUCT OVERVIEW

1.1. System Structure

- Connect this product to an ECG-B or EMCG Series controller. It does not work when connected to other controllers such as ECG-A and ECR Series controllers.

1.1.1. System structure

■ **For ECG-B Series**

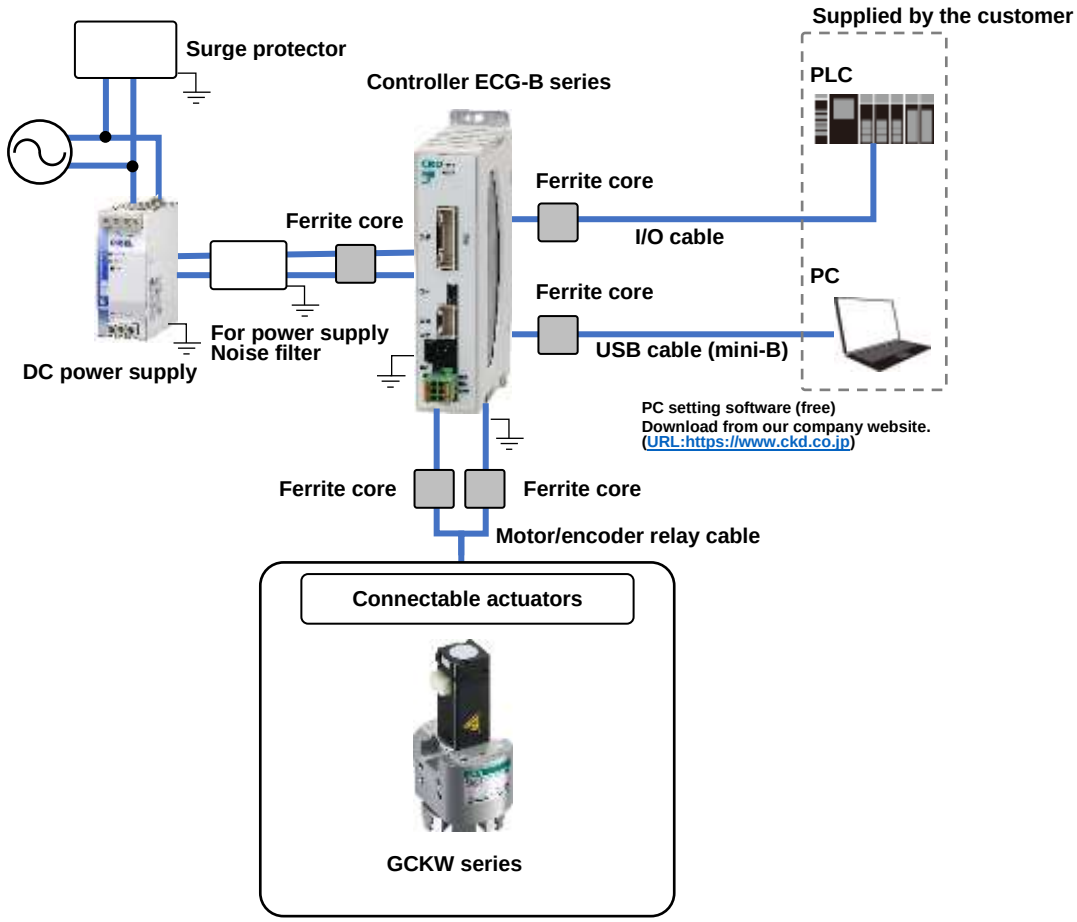

※ The above diagram is a configuration diagram for the parallel I/O design. For other interface specifications, refer to the instruction manual for each interface specification.

The following items can be purchased from us in the system configuration.

	Component	Product name/Model no.
This product	Actuator	GCKW series
Accessories	Motor/encoder relay cable	EA-CBLME4-□□□Note 1
Sold separately	Controller	ECG-B Series
	Power supply connector	DFMC1,5/3-STF-3,5 (PHOENIX CONTACT)
	I/O cable	EA-CBLNP2-□□
	24 VDC power supply	EA-PWR-KHNA240F-24
	Noise filter	AX-NSF-NF2015A-OD
Provided for free	PC setting software	S-Tools

Note 1: Actuators shipped before March 2023 are supplied with a motor/encoder relay cable with the model number "EA-CBLME2-□□□." Refer to "7.2 Cable Specifications" for details.



- A “ferrite core” is a magnetic material that uses a ferrite material. It is used to attenuate high frequency noise.
- A “surge protector” is a device that protects equipment and communication equipment from transient abnormal high voltages such as lightning.
- A “noise filter” is an electric or electronic circuit for removing noise and a device that contains it.

■ For ECMG Series

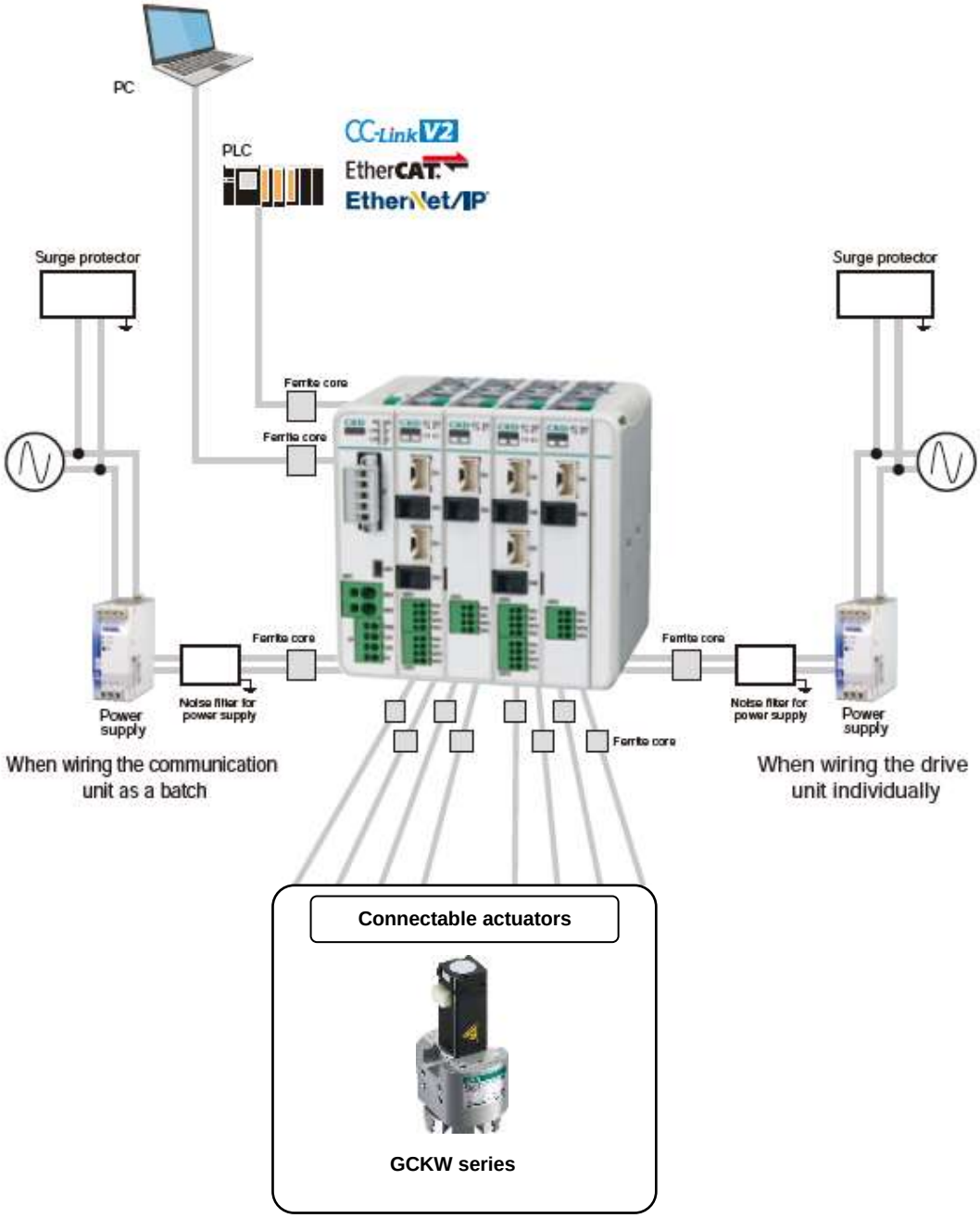

The following items can be purchased from us in the system configuration.

	Component	Product name/Model no.
This product	Actuator	GCKW series
Accessories	Motor/encoder relay cable	EA-CBLME4-□□□Note 1
Sold separately	Communication unit	ECMG-C series
	Drive unit	ECMG-D series
	End unit	ECMG-P series
	Communication connector (CC-Link)	1 port: MSTB 2,5/5-STF-5,08 ABGYAU (PHOENIX CONTACT) 2 ports: TFKC2,5/5-STF-5,08AU (PHOENIX CONTACT)
	24 VDC power supply	EA-PWR-KHNA240F-24
	Noise filter	AX-NSF-NF2015A-OD
Provided for free	PC setting software	S-Tools

Note 1: Actuators shipped before March 2023 are supplied with a motor/encoder relay cable with the model number "EA-CBLME2-□□□." Refer to "7.2 Cable Specifications" for details.



- A “ferrite core” is a magnetic material that uses a ferrite material. It is used to attenuate high frequency noise.
- A “surge protector” is a device that protects equipment and communication equipment from transient abnormal high voltages such as lightning.
- A “noise filter” is an electric or electronic circuit for removing noise and a device that contains it.

1.2. Instruction Manuals Related to This Product

This Instruction Manual is "SM-A69875".
The instruction manuals related to this product are as follows.

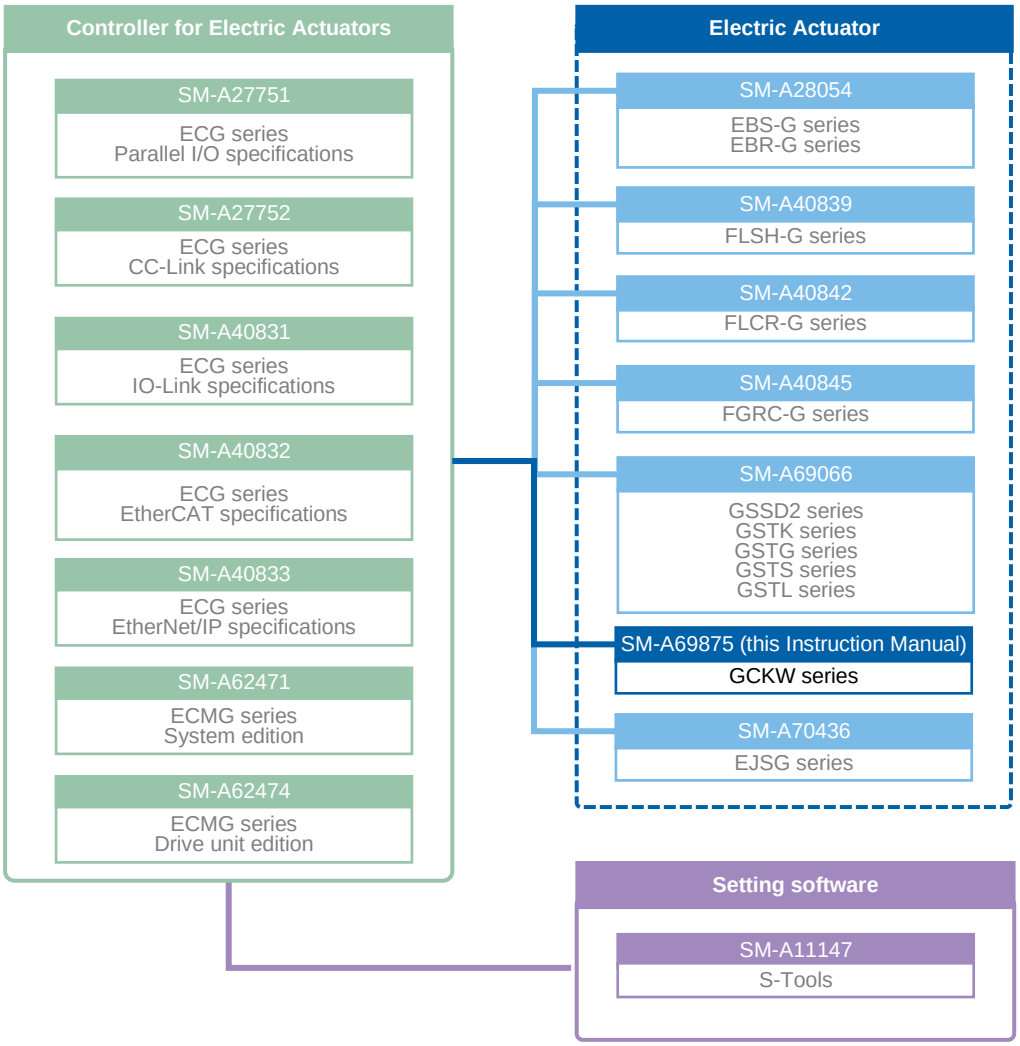

1.3. Part Name

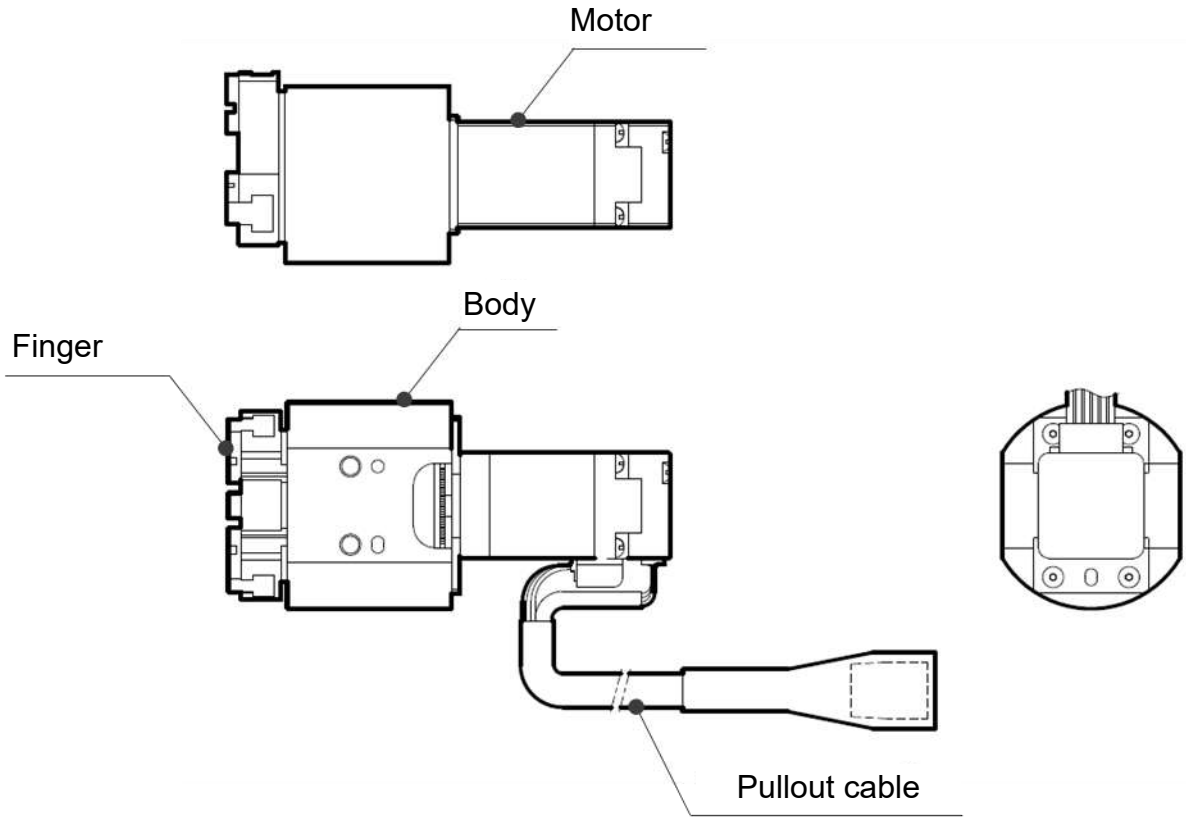

1.4. Model Number Indication

- Connect this product to an ECG-B or ECMG Series controller. It does not work when connected to other controllers such as ECG-A and ECR Series controllers.

1.4.1. Actuator

GCKW - 16 G H1 04 N C N - F S03

Size	
16	16

Applicable controller	
G	ECG-B/ECMG

Screw lead	
H1	1.5 mm

Stroke length	
04	4 mm (2 mm for one side)

Encoder	
C	Incremental encoder

Connector take-out direction	
F	Front
S	Side

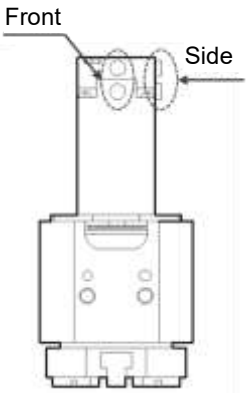

Connector take-out direction

Motor/encoder relay cable	
N00	Not included
S01	Fixed cable 1 m
S03	Fixed cable 3 m
S05	Fixed cable 5 m
S10	Fixed cable 10 m
R01	Movable cable 1 m
R03	Movable cable 3 m
R05	Movable cable 5 m
R10	Movable cable 10 m

※ If you select other than "N00" for "Motor/encoder relay cable," a motor/encoder relay cable is included as an accessory.
For the dimensions of motor/encoder relay cables, refer to "1.4.2 Motor/encoder relay cable (fixed/movable)."

GCKW - 20 G H1 04 N C N - F S03

Size	
20	20

Applicable controller	
G	ECG-G/ECMG

Screw lead	
H1	1.5 mm

Stroke length	
04	4 mm (2 mm for one side)

Encoder	
C	Incremental encoder

Connector take-out direction	
F	Front
S	Side

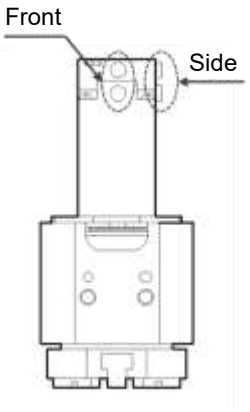

Connector take-out direction

Motor/encoder relay cable	
N00	Not included
S01	Fixed cable 1 m
S03	Fixed cable 3 m
S05	Fixed cable 5 m
S10	Fixed cable 10 m
R01	Movable cable 1 m
R03	Movable cable 3 m
R05	Movable cable 5 m
R10	Movable cable 10 m

※ If you select other than "N00" for "Motor/encoder relay cable," a motor/encoder relay cable is included as an accessory.
For the dimensions of motor/encoder relay cables, refer to "1.4.2 Motor/encoder relay cable (fixed/movable)."

GCKW - 25 G H1 06 N C N - F S03

Size	
25	25

Applicable controller	
G	ECG-B/ECMG

Screw lead	
H1	1.5 mm

Stroke length	
06	6 mm (3 mm for one side)

Encoder	
C	Incremental Encoder

Connector take-out direction	
F	Front
S	Side

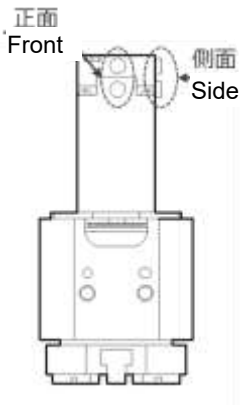

Connector take-out direction

Motor/encoder relay cable	
N00	Not included
S01	Fixed cable 1 m
S03	Fixed cable 3 m
S05	Fixed cable 5 m
S10	Fixed cable 10 m
R01	Movable cable 1 m
R03	Movable cable 3 m
R05	Movable cable 5 m
R10	Movable cable 10 m

※ If you select other than "N00" for "Motor/encoder relay cable," a motor/encoder relay cable is included as an accessory.
For the dimensions of motor/encoder relay cables, refer to "1.4.2 Motor/encoder relay cable (fixed/movable)."

1.4.2. Motor/encoder relay cable (fixed/movable)

■ Motor and encoder relay cable model number system (ECG-B, ECMG series)

EA-CBLME4-**S** **01**

Cable type	
S	Fixed cable
R	Movable cable

Cable length	
01	1 m
03	3 m
05	5 m
10	10 m

■ Motor/encoder relay cable external dimensions (ECG-B, ECMG series)

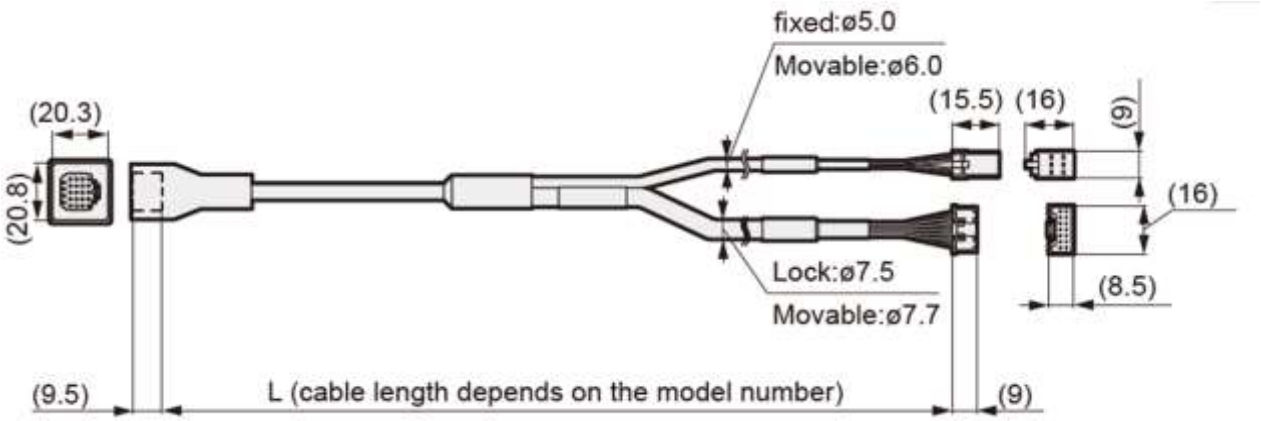

※ Actuators shipped before March 2023 are supplied with a motor/encoder relay cable with the model number "EA-CBLME2-□□□." Refer to "7.2 Cable Specifications" for details.

2. INSTALLATION

DANGER

Do not use the product in a place where dangerous substances such as ignitable, inflammable, or explosive materials are present.
- A fire, ignition, or explosion may occur.

Do not work with wet hands.
- Doing so may cause electric shock.

Since the control power supply and power supply are not insulated, do not connect the + side and the − side of the power supply in reverse.
- Parts may be damaged.

Prevent water and oil from splashing onto the product.
- A fire, electric leakage, or failure may occur. Even oil drops and oil mists are prohibited.

When connecting a PC, make sure that the frame ground of the computer is not grounded.
- When using the product with a positive ground, connecting the product to a PC with a USB cable may cause short-circuit in the DC power supply.

When installing the product, fix the workpiece while surely holding the product and the workpiece.
- An injury may occur if the product falls down, falls off, or malfunctions.

For the controller power supply (control power supply and motor power supply) and the input/output circuit power supply, use a DC stabilized power supply (24 VDC ± 10%) with sufficient capacity.
- If the product is directly connected to an AC power supply, a fire, burst or damage may occur.

Install overcurrent protective equipment (such as a breaker for wiring and a circuit protector) on the primary side of the power supply when wiring in accordance with "JIS B 9960-1:2019 (IEC 60204-1:2016) Safety of machinery—Electrical equipment of machines—Part 1: General requirements".

Reference: Excerpt from JIS B 9960-1:2019 "7.2.1 General matters".
Overcurrent protection shall be provided if the circuit current may exceed the rated value of the component or the allowable current of the conductor, whichever is less. The details of the selected rated value or setting value are specified in 7.2.10.

WARNING

Do not install the product to a combustible material.
- Installing it on combustible materials or near combustible materials may cause a fire.

Do not place heavy objects on cables or pinch them.
- If the cable sheath is torn or excessive stress is applied, it may cause poor continuity or deterioration of insulation.

Do not connect the communication connector used for the product to other equipment.
- A failure or damage may occur.

Do not use or store in areas exposed to strong electromagnetic or radiation.
- A malfunction or failure may occur

Because precision equipment is built in, do not lay it on its side or subject it to vibration or impact during transportation.
- Component damage may occur.

Do not disassemble or modify the product not specified in this Instruction Manual.
- In addition to causing injuries, accidents, malfunctions, or failures, it may not meet the specifications such as this Instruction Manual.



Provide a safety guard fence so as not to enter the operating area of the actuator.



Insulate unused wires.
- A malfunction, failure, or electric shock may occur.



When restarting after emergency stop or irregular stop, make sure that the actuator is safe to operate.

WARNING

Design a safety circuit or safety device so that if the machine stops due to a system abnormality such as an emergency stop or a power failure, the equipment will not be damaged or personal injury will not occur.

Check the wiring of the product with this Instruction Manual or the related instruction manual to ensure that there are no wiring errors or loose connectors.

- There is a possibility of a malfunction or overcurrent flowing in. Overcurrent may cause a malfunction, damage, or fire.

Make sure that the wiring is insulated.

- There is a possibility of a malfunction or overcurrent flowing in. Overcurrent may cause a malfunction, damage, or fire.

Make sure that the wires do not contact other circuits and there is no ground fault and insulation failure between terminals.

- There is a possibility of a malfunction or overcurrent flowing in. Overcurrent may cause a malfunction, damage, or fire.

Make sure to install the emergency stop button in a location where operation is easy.

- Make sure that the emergency stop button has a structure that cannot be automatically reset, and that no one can reset it inadvertently.
- It may take several seconds from the emergency stop to the actuator stop, depending on the speed and loading load when the actuator moves.

Consider the possibility of motor or power source failure.

- Even if motor or power source failure occurs, take measures to prevent personal injury or equipment failure.

When there is a need for resetting the actuator to the starting position, design a safe control unit.

Install the product indoors and in a dry place.

- It may cause an electric leakage or a fire accident in a place exposed to water or a place with high humidity (place with humidity of 80% or more, or with condensation).

Adopt a safety design in consideration of a gripping force reduction caused by a power failure.

- The gripping force may be reduced by a power failure, resulting in a detaching of workpiece. Design and implement a safety device to prevent injuries to people and damages to mechanical devices.

Perform class D grounding (grounding resistance: 100 Ω or less) for the product.

- Electric leakage may cause a fire, electric shock or malfunction.

CAUTION

Do not use the product in an environment where a strong magnetic field occurs.
- A malfunction may occur.

Do not perform a withstand voltage test or an insulation resistance test on a device with the product installed.
- Due to the circuit design, the product may be damaged if a withstand voltage test or an insulation resistance test is performed on the device with the product installed. If a withstand voltage test or an insulation resistance test is required as a device, remove the product before performing it.

Do not store or use the product in a place exposed to ultraviolet rays or in an atmosphere where corrosive gas or salt are present.
- It may cause performance deterioration and strength deterioration due to rust.

Do not install the product in a place subjected to strong vibrations or shocks.
- If the product is subjected to strong vibrations or shocks, a malfunction may occur.

Do not use the product in a place where condensation occurs due to a sudden change in the ambient temperature.
- It may cause a malfunction of the product or deteriorate of strength.

Connect only cables designed for the product.
- A failure of the product or unexpected accident may occur.

When transporting or mounting, do not have the moving part or cable part of the product.
- An injury or cable disconnection may occur.

Do not move the lead cable from the actuator.
- Fix the connector to the same part with a cable clamp or the like to prevent it from moving. Use the lead cable with a bending radius of 40 mm or more.

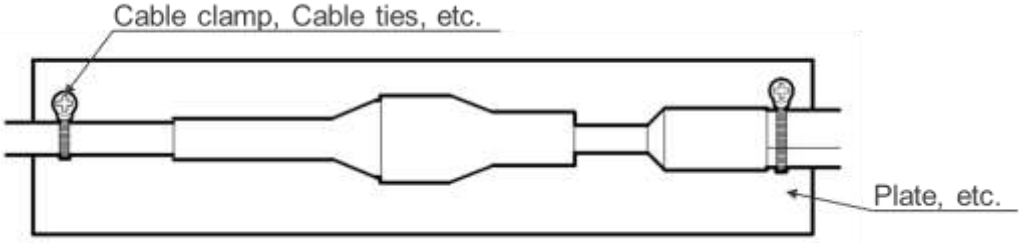

Do not bend the relay cable up to 200 mm from the end of the connector.
- Poor continuity may occur.

Do not hold the controller case tightly.

Do not bend the fixed cable repeatedly.
- If repetitive bending is unavoidable, use a movable cable.

CAUTION

When operating the product while the power is not supplied, remove the workpiece by operating the manual operation plate to open/close the finger, or by removing the attachment. Also, do not apply any excess force to the manual operation plate.

- A damage or operation fault may occur.

Do not put dents and scratches interfering with the flatness or perpendicularity of the body mounting surface and of the finger.

Except for the body securing screws and attachment securing screws, do not disassemble or retighten.
An operation fault may occur.

When performing electric welding to the equipment to which the product is installed, remove all the frame ground connections of the product.

- If electric welding is performed with the frame ground connected, the product may be damaged due to welding current, excessive high voltage during welding, or surge voltage.

Prevent any excess load from being applied to the finger and attachment during the workpiece installation/removal as well as during transportation.

- Scratches or dents may occur to the linear guide rolling surface of the finger, leading to an operation fault.

When installing an external stopper or a holding mechanism (such as a brake), arrange it so as not to affect the detection of the home position.

- Unintended position may be recognized as the home position due to the influence of external stopper or holding mechanism at the time of home position return.

Install the wiring so that no induction noise is applied.

- Avoid a place where a large current or strong magnetic field occurs.
- Do not use the same piping or wiring (with multi-core cables) as the power line of a large motor other than the product.
- Do not use the same piping or wiring as the power supplies and wires for inverters used for robots. Apply frame ground to the power supply and insert a filter into the output section.

Use a stabilized power supply (24 VDC ± 10%) as the power supply, and select one with sufficient capacity for the number of installed products.

- If the capacity is not sufficient, a malfunction may occur.

Use cables with a bending radius of 63 mm or more. In addition, fix the fixed cable so as not to move easily.

- Since the bending radius cannot be applied to the bending of the connector part, it is recommended to fix near the connector.

Secure sufficient space for maintenance and inspection.

- Otherwise, maintenance and inspection cannot be performed, which may cause equipment stop or damage, or injuries.

CAUTION

The customer is responsible for checking the compatibility of the product with the customer's system, machinery, and device.

When holding the product, hold its bottom surface.

When transporting and installing the product, ensure the safety of the workers by securely supporting the product using a lift or supporting gear and by assigning more than one worker.

Install the product in a way that it is not subjected to twisting or bending force.

Before adjusting the gain, firmly fix the actuator body to the rigid equipment.

When using positioning holes, make sure to use pins having the size that does not require press-fitting.

- Press fitting pins may cause damage or distortion in the guide section, resulting in reduced accuracy. The recommended tolerance of the pin is JIS tolerance of 6 µm or less.

Separate the power for the output section of the product from the power for inductive loads such as solenoid valves and relays that generate surges.

- If the power supply is shared, surge current may be applied to the output part, causing damage.
  If the power cannot be separated, connect the surge absorption elements in parallel directly to all the inductive loads.

Select a model with a sufficient gripping force for the workpiece mass.

Select a model with a sufficient opening/closing width for the workpiece size.

- The gripping position may become inconsistent due to the opening/closing width and workpiece variations. For the opening from gripping action, increase the stroke with an amount of backlash.

- Backlash is a mechanical play in gears, etc. The lower the backlash, the less rattling.

2.1. Installation Environment

- Before storing or using the product, check the ambient temperature and atmosphere specified in the product specifications.
- Use the product at an ambient temperature between 0°C and 40°C. Ventilate if heat can become trapped.
- Use the product at an ambient humidity between 35% and 80% RH. Do not use the product in a place where condensation occurs.
- Store in a place with an ambient temperature of -10 to 50°C and an ambient humidity of 35 to 80% RH, and avoid condensation and freezing.
- Avoiding places exposed to direct sunlight or near heating elements, install in a place free from dust, corrosive gas, explosive gas, flammable gas, and flammable materials. Chemical resistance has not been considered for the product.
- Install the actuator on a smooth and flat surface.
- Installing the actuator on a smooth surface with dents may cause the actuator to malfunction or be damaged.
- Install the controller so that the exhaust port faces up and down and the power supply connector on the front panel faces down. Secure a space of 50 mm or more on both the top and bottom surfaces in consideration of natural convection as a heat dissipation space.
- Since the controller uses S-Tools, secure a space of 70 mm or more in front of the controller so that the connector of the connection cable to the PC can be attached and detached.

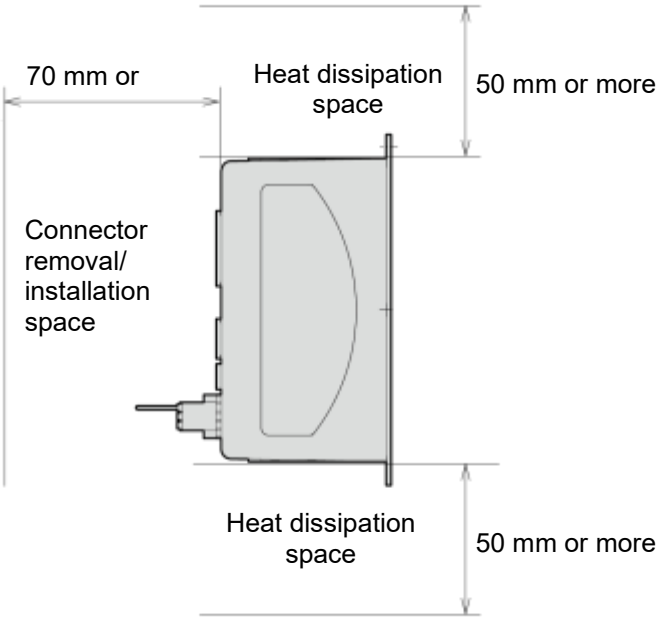

2.2. Unpacking

CAUTION

Heavy products shall not be carried by a worker alone.

Never ride on the packaging.

Do not place heavy items or items with concentrated loads that may deform the packaging.

Do not apply excessive force to any part of the product.

Pay sufficient attention to avoid an impact such as dropping during transportation and handling.

When taking out the product from the packaging, hold the product body.

Keep it level when standing still.

Check that the model number ordered and the model number indicated on the product are the same.
Check the exterior of the product for any damage.

2.2.1. Parts of the product

Parts of the product	Quantity
Actuator	1
Motor/encoder relay cable	1

※ If "N00" is selected as the actuator model number at the time of purchase, a motor/encoder relay cable is not included. Purchase them as needed.
For the indication of model numbers of motor/encoder relay cables, refer to "1.4.2Motor/encoder relay cable (fixed/movable)".

2.3. Installing

2.3.1. Actuator

CAUTION

Do not allow excessive shock or moment to act on the actuator.
- A malfunction or damage may occur.

The flatness of the mounting surface of the body should be 0.02 mm or less. Do not apply twisting or bending force to the product.
- An operation fault or damage may occur.

For the screw-in depth and the tightening torque of bolts for installing the body, refer to the following table.

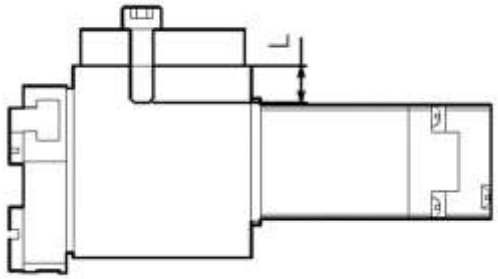

Item	Bolt	Tightening torque (N·m)	Max. screw-in depth L (mm)
GCKW-16	M4 × 0.7	1.6	4.5
GCKW-20	M5 × 0.8	3.3	8
GCKW-25	M6 × 1.0	5.9	10

2.3.2. Finger

CAUTION

When mounting the attachment to the finger, take into consideration the effects exerted on the hand body and perform tightening while providing support using a tool such as a spanner so to prevent the finger from being distorted.

- Damage may occur.

When mounting the attachment to the finger, be careful not to apply lateral load to the finger.
When mounting the attachment to the finger, use the tightening torque listed below.

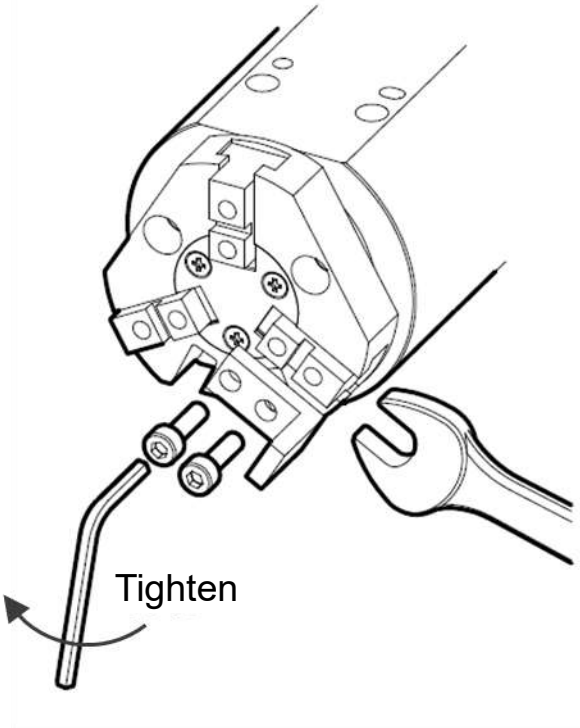

Item	Bolt	Tightening torque (N·m)	Max. screw-in depth L (mm)
GCKW-16	M3 × 0.5	0.59	5
GCKW-20	M3 × 0.5	0.59	6
GCKW-25	M3 × 0.5	0.59	6

Applying an excessive lateral load or any impactful load to the finger can cause backlash or damage. Make sure to use the product while keeping the external force exerted on the finger within the allowable load listed in the catalog.

3. USAGE

DANGER

Do not enter the operating range while the actuator can operate.
- An injury may occur.

Do not work with wet hands.
- Doing so may cause electric shock.

WARNING

Do not climb on the product or put things on it.
- A fall accident, injury due to the product falling down or off, etc., or malfunction and runaway due to the product damage may occur.

Do not issue a command with a set value smaller than the positioning repeatability.
- The positioning control may not be performed properly.

Do not apply a load greater than the allowable value to the product.
- Details of the allowable value are provided on the model selection page of the catalog.



Do not touch the main unit with hands or body during operation or immediately after stopping.
- There is a risk of contact with hot areas and burns.



Confirm the wiring with peripheral devices and that equipment is safe to operate before supplying electricity to the product.
- If electricity is supplied inadvertently, an electric shock or injury may occur.

If the controller LED does not light or blink when the power is turned on, turn off the power immediately.



Before controlling the actuator from a position where it cannot be seen, check that it is safe for the actuator to operate.



When a power failure occurs, turn off the power to the controller.
- The product can suddenly start moving when the power is restored and it can lead to an accident.

Before moving the moving part of the actuator manually, perform after confirming the servo OFF.
- When setting the servo OFF, operate with sufficient safety so that there is no danger of the moving part falling.

Take measures to prevent damage to the human body and the device in case of power failures.
- An unexpected accident may occur.

CAUTION

When the controller and actuator are connected with a cable, do not move the actuator moving part by external force except for manual operation.

- A malfunction or damage may occur due to regenerative currents.

Do not apply external force to the actuator during the home position return operation.

- The home position may be misrecognized.

Do not dent or scratch the moving part of the actuator.

- An operation fault may occur.

Do not set the servo OFF while gravity or force of inertia is applied.

- The moving part may continue to move or fall off if the servo OFF is set. For safety reasons, perform the servo OFF operation in a balanced state, or be careful not to drop the workpiece by its own weight in the case of vertical installation.

Do not issue the stop command during acceleration or deceleration.

- There is a risk of danger due to speed change.

Do not turn the power on and off frequently.

- Elements in the controller may become damaged.

Except during home position return operation and pressing operation, do not allow to hit parts such as the stroke end.

- The feed screw may become damaged due to impacts and an operation fault may occur.



Do not insert fingers or objects into the opening of the product.

- An injury or product damage may occur.



If it operates with vibration, adjust the speed or gain to prevent vibration.

- Depending on the conditions of use, it may operate with vibration even within the operation speed range.

CAUTION

When changing the combination of the actuator and controller, be sure to check the program and parameters before operating them.
- An accident may occur.

Use the actuator so that no impact is applied to the moving part.

Since the product life varies depending on the transfer load, etc., set it with sufficient margin.

Provide the required gripping power with a sufficient margin to ensure operation.
- The gripping force and pressing ratio listed in "7.1 Specifications" are for reference only. Variation in the motor torque may cause errors even when the setting values are the same.

Do not use a load that does not fall within the specified range.
- If the specified range is exceeded, the unbalanced load applied to the guide section becomes excessive. This may cause play in the guide section, make the accuracy worse, and adversely affect the service life.

When operating the product without supplying power, make sure to use the manual operation plate.

When performing a positioning operation, take the backlash amount into consideration.
- In positioning operation, backlash causes displacement of the finger position.

Regarding the target position for gripping in pressing operation, allow a margin for the desired stop position.
- Set the position considering the backlash amount.

When you make the actuator grip a workpiece, always use pressing operation.
- During a positioning operation and within the positioning range, do not bump the finger or the attachment into the workpiece. The feed screw may become jammed, and an operation fault may occur.

Set the operating torque for releasing the gripping larger than the pressing operation torque.
- If the releasing torque is small, galling may occur and releasing may become impossible.

When force of inertia is applied due to transfer or rotation, perform a full stroke operation since the steel ball becomes offset and an increase in the sliding resistance and a reduction in the accuracy occur.
- The limited trajectory guide is used for this finger.

- Repeatability refers to the displacement of the finger stop position when clamping and unclamping are repeated under the same conditions. The same conditions include hand fixing and use of the same attachment, as described below.

<Conditions>

◎ Attachment size, shape, and weight

◎ Workpiece gripping position of attachment

◎ Clamping method and length

◎ Resistance between the attachment and workpiece contact area

◎ Variations in grip force, etc.

Opening/closing shocks may cause a displacement of workpiece position and may worsen repeat accuracy. Wear and lack of rigidity of the attachment may also lead deterioration of accuracy.

- "Regenerative current" is the current that is generated by the motor operating like a generator when the moving part of the actuator is moved by an external force. Reverse current flows from the motor to the controller, causing malfunction or damage.

3.1. Using the Controller

For how to use the controller and S-Tools, refer to the instruction manual for each product.
Refer to “1.2Instruction Manuals Related to This Product” for the instruction manual numbers

CAUTION

Do not use a controller with an old software version.
- An operation fault may occur.

For the ECG-B series, use controller "software version" 1.03.00 or later. Software Ver. of the controller can be checked from the controller information in the Model Information view of S-Tools.

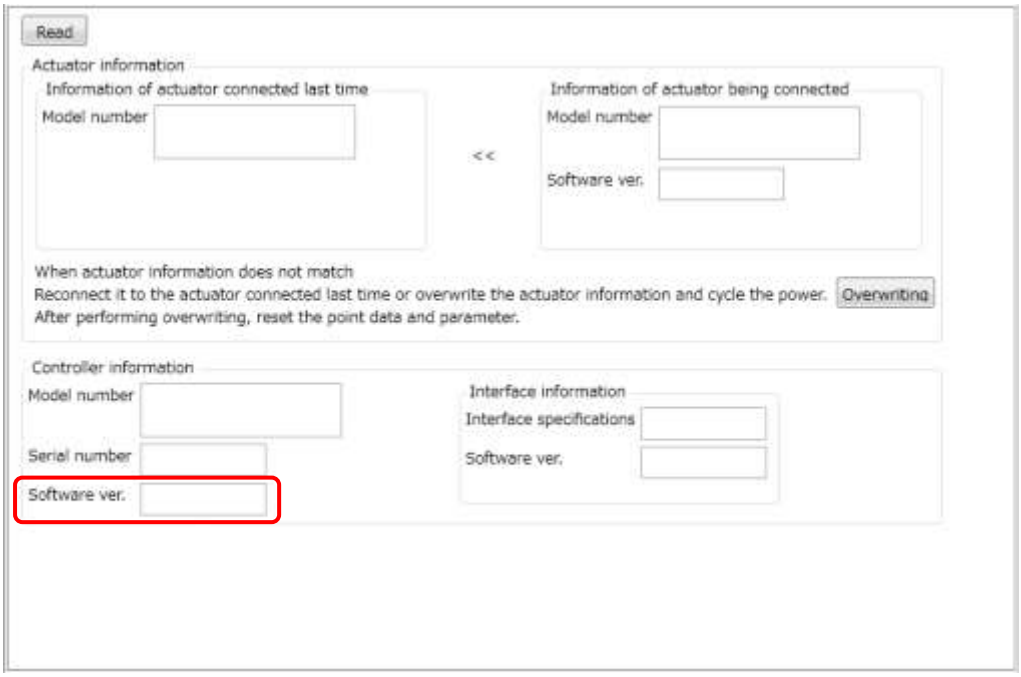

3.2. Manual Operation

CAUTION

Do not apply excessive torque to the manual operation plate.
- An operation fault or damage may occur.

Before performing manual operation, make sure that the servo is turned off.
- A malfunction or damage may occur with the product.

Manual operation is mainly used during startup, maintenance, and inspection.
- Frequent use may cause the actuator to operate in an unexpected way.

Turn the manual operation plate.

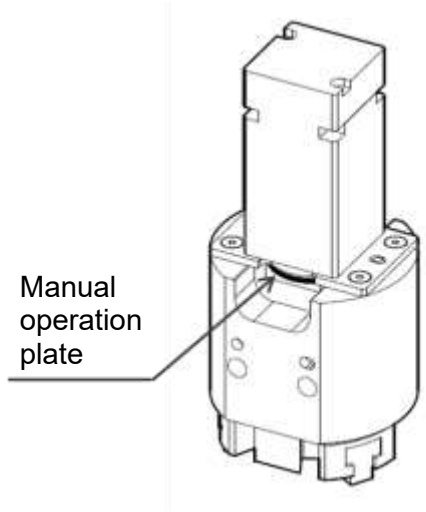

CCW (counterclockwise): Finger opens.

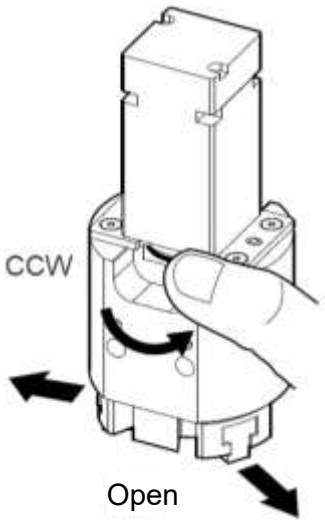

CW (clockwise): Finger closes.

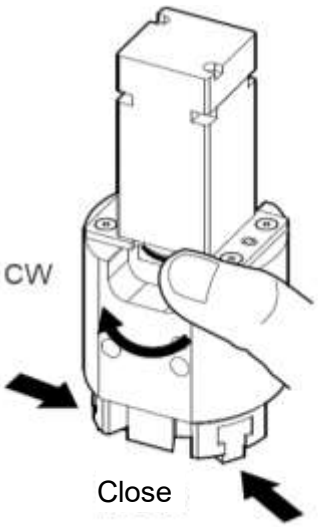

4. MAINTENANCE AND INSPECTION

WARNING

Do not disassemble or modify the product not specified in this Instruction Manual.
- In addition to causing injuries, accidents, malfunctions, or failures, it may not meet the specifications such as this Instruction Manual.

Do not attach or detach wiring or connectors while the power is turned on.
- A malfunction, failure, or electric shock may occur.

Do not work with wet hands.
- Doing so may cause electric shock.

Do not touch the heat sink and cement resistor inside the controller, and the actuator motor.
- An electric shock or burns may occur.

Install the product before wiring.
- An electric shock may occur.

After 5 minutes or more have passed since the power was turned off, check the voltage with a tester, etc., and then perform the inspection.
- An electric shock may occur.

CAUTION

During maintenance, inspection, and repair, call attention to the surroundings so that a third party does not accidentally turn on the power.

Turn off the power immediately if abnormal heat, smoke, odor, sound, or vibration occurs in the product.
- Damage to the product or fire may occur.

Wiring and inspections must be performed by specialists.

Use a power cable that can sufficiently tolerate the instantaneous maximum current.
- A heat generation or damage may occur during operation.

Perform periodic inspections (two to three times a year) to confirm that the product operates properly.

4.1. Periodic Inspection

CAUTION

Perform periodic inspections (two to three times a year) to confirm that the product operates properly.

4.1.1. Inspection item

Inspection item	Inspection method	Action
Check that the mounting bolts on the product and the screws on the terminal block are not loose.	Looseness check	Turn off the power, and then additionally tighten them with the specified torque.
Check that connectors are not loose.	Looseness check	Turn off the power, and then insert the connectors correctly.
Check that there are no scratches and cracks on the cables.	Visual inspection	Turn off the power and then replace cables.
Check that foreign matters are not accumulating or are not stuck in between the movable section.	Visual inspection	Turn off the power, and then perform cleaning. Note 1
Check that there are no vibrations or abnormal sounds while the product is stopped or operated.	Noise inspection	If there is any abnormality, contact your nearest CKD sales office or distributor.
Check that the power supply voltage is normal.	Inspection by a tester	Check the power system and use the product within the power supply voltage range described in the Specifications. Supply voltage: 24 VDC ±10%

Note 1: Use a clean waste cloth for cleaning and make sure not to leave foreign matters on the movable section.

4.2. Precautions on Product Disposal

CAUTION

When disposing of the product, comply with “laws pertaining to disposal of wastes and cleaning” and have an industrial waste disposal company dispose of the product.

5. TROUBLESHOOTING

5.1. Problems, Causes, and Solutions

If the product does not operate as intended, check the table below for a possible solution.
Refer to the catalog or the instruction manual of each controller for details on how to take action. Refer to “1.2Instruction Manuals Related to This Product” for the instruction manual numbers of controllers.

Problem	Cause	Action
Servo lamp does not light or blink even when the power is turned on.	Wiring is not correct.	Check the power supply wiring.
	The cable is disconnected.	Check for cable sheath damage and disconnection. Check the connector and terminal.
	The product is broken or damaged.	It requires repair. Contact your nearest CKD sales office or distributor.
	The power supply is faulty.	Repair or replace the power supply.
	Power capacity is insufficient.	Use a power supply with large capacity.
The alarm lamp remains lit in red.	Alarm has been issued.	Check the alarm code and remove the cause.
	There is an abnormality in system.	It requires repair.
No signal of ready for operation is output.	It is in emergency stop state.	Release the emergency stop.
	A voltage is applied to the force brake release signal.	Ensure that a 24 V voltage is not applied to the force brake release signal during operation.
	In servo OFF state	Input the servo ON signal from the PLC.
	The stop signal is OFF.	Turn ON the stop signal.
	Wiring is not correct.	Check the wiring to the PLC.
Product does not operate as intended with PLC signal.	Input signal is unstable.	The input signal from the host equipment may be chattering. Ensure the input signal is at least 20 ms.
	It stops during operation.	The transfer load may be too large. Recheck the specifications.
	The point data configuration is wrong.	Check the point data configuration.
	Setting of operation mode is incorrect.	Check the “Operation mode” details in the parameters.
	Wiring is not correct.	Check the wiring.
	Friction load is too large.	Check the friction load during transport. Confirm that it is not seizing with the workpiece.

Problem	Cause	Action
Product does not operate as intended with PLC signal.	It is colliding with the workpiece.	Check the assembly and setting status.
	Internal resistance of product has increased.	Recheck the environment conditions and the conditions of use. Check the usage period (operating distance).
	Actuator body is damaged.	It requires repair.
Product itself vibrates.	Connection to actuator is loose.	Tighten the bolts.
		Perform gain adjustment.
The product cannot be operated with PLC.	It is in TOOL mode.	Use S-Tools to change it to PLC mode.
	Wiring is not correct.	Check the wiring.
	The cable is disconnected.	Check for cable sheath damage and disconnection. Check the connector and terminal.
	Overload error occurs.	Check the transport load. Check the speed.
	Power capacity is insufficient.	Confirm that the power capacity satisfies the required voltage and current.
Workpiece moves due to its own weight during an emergency stop.	Load exceeding holding force is applied.	Confirm that an external force equal to or higher than the holding force is not being operated.
		Review the setting of the parameter “Fixed current when stopped”.
Positioning completion output does not turn off.	The positioning width is too large for the travel distance.	Check the “Positioning width” in the point data.
Pressing operation cannot be performed.	Operation method is not set to pressing operation.	Check the "Operation method" in the point data.
The maximum speed is not achieved.	The load or speed is excessive.	Confirm that the workpiece weight and operation speed satisfy specification values.
		Perform gain adjustment.
The speed is very slow.	Operation method is set to pressing operation instead of positioning operation.	Check the "Operation method" in the point data.
		Perform gain adjustment.
The actuator is making abnormal sound.	It is resonating.	Perform gain adjustment.
Overshoot occurs.	Both transfer weight and amount of deceleration are large.	Confirm that the workpiece weight and operation speed satisfy specification values.
		Reduce the "Deceleration" in the point data.
		Perform gain adjustment.

Problem	Cause	Action
The actuator does not work.	The servo does not turn ON.	Check the MPI and MPO connections on the power connector.
		Check the emergency stop release status.
		Check whether a voltage is applied to the force brake release.
It cannot reach target takt time.	Setting of acceleration or speed is not correct.	Check the “Acceleration” in the point data.
		Check the “Speed” in the point data.

If you have any other questions or concerns, contact your nearest CKD sales office or distributor.

5.1.1. Items to check when trouble occurs

<table>
<tr><th>Item</th><th>What to check</th></tr>
<tr><td>Controller</td><td>
Check the light status on the controller.
• ECG-B controller
<table>
<tr><th colspan="2">Communication status</th><th>SV</th><th>ALM</th></tr>
<tr><td colspan="2">When the control power is OFF</td><td>Off</td><td rowspan="3">Off</td></tr>
<tr><td rowspan="2">At normal operation</td><td>At servo ON</td><td>Lit green</td></tr>
<tr><td>At servo OFF</td><td>Blinking green
(lit once per second)</td></tr>
<tr><td rowspan="2">At alarm occurrence</td><td>At occurrence of non-cancelable alarm</td><td rowspan="2">Blinking green
(After lighting off for 2 seconds, light on once every 1 second n times, and then repeat) → Alarm 0xn □□□ occurred</td><td>Lit red</td></tr>
<tr><td>At occurrence of cancelable alarm</td><td>Blinking red
(lit once per second)</td></tr>
<tr><td rowspan="2">At occurrence of warning</td><td>At servo ON</td><td>Lit green</td><td rowspan="2">Blinking red
(lit once per 2 seconds)</td></tr>
<tr><td>At servo OFF</td><td>Blinking green
(lit once per second)</td></tr>
</table>
• ECMG controller
<table>
<tr><th colspan="2">Communication status</th><th>ACT</th></tr>
<tr><td colspan="2">When the control power is OFF</td><td>Off</td></tr>
<tr><td rowspan="2">At normal operation</td><td>At servo ON</td><td>Lit green</td></tr>
<tr><td>At servo OFF</td><td>Blinking green (lit once per second)</td></tr>
<tr><td rowspan="2">At alarm occurrence</td><td>At occurrence of non-cancelable alarm</td><td>Lit red</td></tr>
<tr><td>At occurrence of cancelable alarm</td><td>Blinking red
(lit once per second)</td></tr>
<tr><td colspan="2">At occurrence of warning</td><td>Blinking red
(lit once per 2 seconds)</td></tr>
</table>
</td></tr>
<tr><td>PLC</td><td>Check for abnormalities on the PLC side.</td></tr>
<tr><td>Alarm</td><td>Use S-Tools to check the alarm information.</td></tr>
<tr><td>Actuator information</td><td>When using the ECG-B or ECMG series, check that the actuator information written in the controller is identical with the connected actuator.</td></tr>
<tr><td>PLC communication</td><td>Use S-Tools to check the I/O status.</td></tr>
<tr><td>Check the cable connection</td><td>Make sure that the cables are connected properly without "disconnection" or "damaged sheath." Before checking the continuity, be sure to turn off the power and remove the cables to prevent an electric shock.</td></tr>
<tr><td>Control power supply</td><td>Check the voltage of the control power supply (24 VDC).</td></tr>
<tr><td>Anti-noise measure</td><td>Check that measures (such as connecting ground wire and attaching a surge protector) have been taken against noise.</td></tr>
<tr><td>Situation check</td><td>Check the history leading up to the trouble occurring and the operation condition when the trouble occurred.</td></tr>
<tr><td>Serial number</td><td>Check the product's serial No. It may be requested for confirmation when you make an inquiry.</td></tr>
</table>

※ Examine the cause of the trouble on the basis of the above items. Refer to “5.1Problems, Causes, and Solutions” for solutions.

6. WARRANTY PROVISIONS

6.1. Warranty Conditions

■ Warranty coverage

If the product specified herein fails for reasons attributable to CKD within the warranty period specified below, CKD will promptly provide a replacement for the faulty product or a part thereof free of charge or repair the faulty product at one of CKD's facilities free of charge.
However, the following failures are excluded from this warranty:

- Failure caused by handling or use of the product under conditions and in environments that deviate from those stated in the catalog, the Specifications, or this Instruction Manual.
- Failures due to excess durability (number of times, distance, time, etc.) and consumables
- Failure not caused by the product.
- Failure caused by use not intended for the product.
- Failure caused by modifications or repairs not carried out by CKD.
- Failure caused by reasons unforeseen at the level of technology available at the time of delivery.
- Failure caused by causes that are not CKD responsibility, such as natural disasters and disasters.

The warranty stated herein covers only the delivered product itself. Any loss or damage induced by failure of the delivered product is excluded from this warranty.

■ Confirmation of product compatibility

It is the responsibility of the customer to confirm compatibility of the product with any system, machinery, or device used by the customer.

■ Others

The terms and conditions of this warranty stipulate basic matters.
When the terms and conditions of the warranty described in individual specification drawings or the Specifications are different from those of this warranty, the specification drawings or the Specifications shall take precedence.

6.2. Warranty Period

The product is warranted for one (1) year from the date of delivery to the location specified by the customer.

7. Reference Information

7.1. Specifications

Item		GCKW - 16	GCKW - 20	GCKW - 25
Motor type		Stepping motor		
Encoder type		Incremental encoder		
Motor size	mm	□20	□25	□25L
Drive method		Sliding screw		
Stroke	mm	4 (each finger 2)	4 (each finger 2)	6 (each finger 3)
Screw lead	mm	1.5		
Max. gripping power Note 1	N	7 (each finger)	16 (each finger)	29 (each finger)
Opening/closing speed range	mm/s	5 to 50 (each finger)		
Gripping speed range Note 1	mm/s	5 to 15 (each finger)		
Acceleration/Deceleration range	G	0.1 to 0.3		
Repeatability Note 2	mm	±0.02		
Positioning repeatability Note 3	mm	±0.05 (each finger)		
Lost motion	mm	0.3 or less (each finger)		
Weight	g	250	390	580
Motor power supply voltage		24 VDC ± 10%		
Insulation resistance		10 MΩ, 500 VDC		
Withstand voltage		500 VAC, 1 minute		
Operating ambient temperature		0 to 40°C (no freezing)		
Operating ambient humidity		35% to 80% (no condensation)		
Storage ambient temperature		-10 to 50°C (no freezing)		
Storage ambient humidity		35% to 80% (no condensation)		
Atmosphere		No corrosive gas, explosive gas, or dust		
Degree of protection		Equivalent to IP40 (IEC standard)		

Note 1: Gripping is done with pressing operation
Note 2: Repeatability indicates variation when a workpiece is repeatedly gripped under the same operating conditions.
Note 3: Indicates variation when positioning is repeatedly performed at the same point.

7.2. Cable Specifications

Actuators shipped before March 2023 are supplied with the following motor/encoder relay cable. To comply with European standards when using ECMG, use the EA-CBLME4 cable. To comply with European standards when using ECG, either the EA-CBLME2 cable or the EA-CBLME4 cable can be used.

■ Motor/encoder relay cable model number system (ECG-B series)

EA-CBLME2- **S** **01**

Cable type	
S	Fixed cable
R	Movable cable

Cable length	
01	1 m
03	3 m
05	5 m
10	10 m

■ Motor/encoder relay cable external dimensions (ECG-B series)

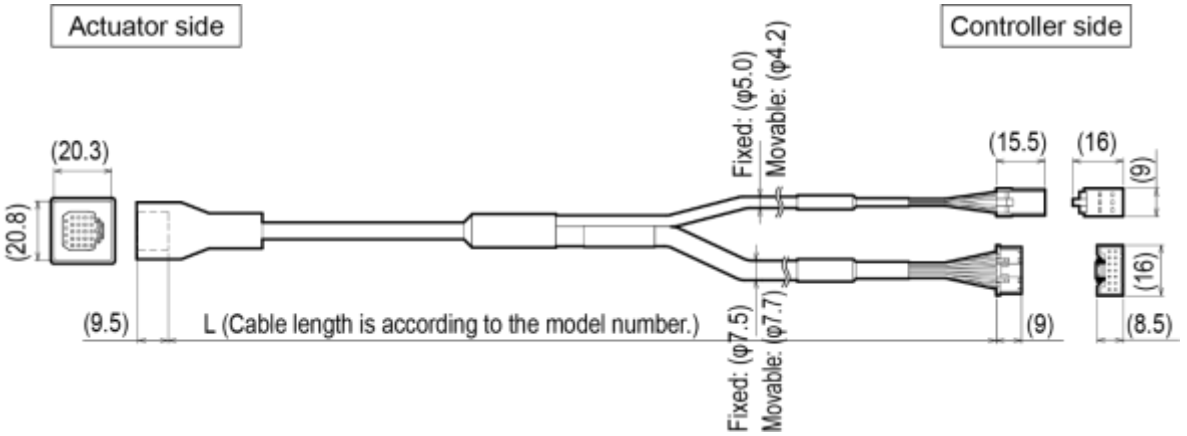

Index

F

Finger 26

G

Gripping speed range 41

L

Lost motion 41

M

Manual operation plate 32
Max. gripping power 41
Motor/encoder relay cable 16

O

Opening/closing speed range 41

P

Positioning repeatability 41

R

Repeatability 30, 41

S

Screw lead 41
S-Tools 8, 10

Glossary

CAT5e
A standard for network cables, also called category 5e or category 5 enhanced. The communication speed has been improved from the conventional CAT5 standard. This cable is less susceptible to crosstalk caused by noise from other cables.

CCW
Abbreviation for Counter Clockwise Rotation. Counterclockwise when viewed from the output shaft side.

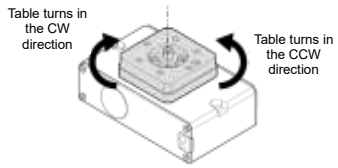

CRC
Abbreviation for Cyclic Redundancy Check. Also referred to as cyclic redundancy checking. A method to check whether data was transmitted, recorded, or replicated accurately.

CSP + file
Abbreviation for the Control & Communication System Profile Plus file. It contains information to help start up, operate, and maintain CC-Link compatible devices. Since the profile specification is fixed, parameters can be easily set for CC-Link products even if they are from different manufacturers.

CW
Abbreviation for Clockwise Rotation. Clockwise when viewed from the output shaft side.

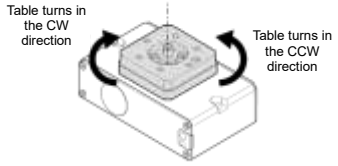

Data Storage function
A function to back up the configuration parameter data of an IO-Link device, such as an ECG controller, to the IO-Link master.

DHCP server
A server that automatically assigns IP addresses and other configuration information to devices connected to a network.

EDS file
Abbreviation for Electronic Data Sheet file. It contains information to help start up, operate, and maintain EtherNet/IP-compatible devices. Since the profile specification is fixed, parameters can be easily set for EtherNet/IP products even if they are from different manufacturers.

ESI file
Abbreviation for EtherCAT Slave Information file. It contains information to help start up, operate, and maintain EtherCAT compatible devices. Since the profile specification is fixed, parameters can be easily set for EtherCAT products even if they are from different manufacturers.

HDLC
Abbreviation for High-level Data Link Control, and a type of protocol of the data link layer. Transmission efficiency is high because continuous transmission can be performed without waiting for the other party's response, and data error detection using CRC enables highly reliable data transmission.

IODD file
An abbreviation for the IO Device Description file. It contains information to help start up, operate, and maintain IO-Link compatible devices. Since the profile specification is fixed, parameters can be easily set for IO-Link products even if they are from different manufacturers.

IO-Link device
Devices such as sensors, actuators, and controllers compatible with IO-Link.

IO-Link master
It can connect multiple IO-Link devices and receive signals of the IO-Link devices. The IO-Link master can be set with IO-Link device setting items such as device verification function, backup function, and restore function using PLC development tools.

Input data
It indicates the 32 bit unit data (2 words) to be written from the host device (PLC, etc.) to the controller in EtherCAT communication.

Input signal
It indicates the bit-wise data to be written from the host device (PLC, etc.) to the controller in EtherCAT communication.

Output data
It indicates the 32 bit unit data (2 words) read from the controller by the host device (PLC, etc.) in EtherCAT communication.

Output signal
It indicates the bit-wise data read from the controller by the host device (PLC, etc.) in EtherCAT communication.

NPN
It indicates that NPN transistors are generally used in the output unit of a PLC in the connection of the parallel I/O specification. Even if the NPN transistor is not used, if the − side of the external power supply is connected to the output COM (output common) and the + side of the external power supply is connected to the input COM (input common), the term NPN is used. Also referred to as negative common type or sink type.

PNP
It indicates that PNP transistors are generally used in the output unit of a PLC in the connection of the parallel I/O specification. Even if the PNP transistor is not used, if the + side of the external power supply is connected to the output COM (output common) and the - side of the external power supply is connected to the input COM (input common), the term PNP is used. Also referred to as positive common type or source type.

PLC
Abbreviation for Programmable Logic Controller. A programmable controller for controlling industrial equipment. Possible to control multiple motors, sensors, robots, and other various devices.

WDT
Abbreviation for watchdog timer. A timer that detects an error in the computation time, monitors the time of one scan of the program, and issues an alarm if processing does not finish within the scheduled time.

Alarm code
When an error is detected, it is output from the controller to inform you of the error. You can check the display lamp of the controller, the output signal to the PLC, and all digits or one upper digit of the alarm code from S-Tools. You can check the details of the alarm in the Instruction Manual or the alarm history screen of S-Tools.

Inch operation
It is used when you want to move by relative position specification by the amount of travel set from the current position.

Encoder
There are a linear encoder that measures and outputs movement on a linear axis, and a rotary encoder that measures and outputs angle (rotational movement). The rotary encoder is referred to as an encoder in this Instruction Manual, the instruction manual described in the “Instruction manual for this product”, and the catalog.

- Incremental encoder
  An encoder that measures and outputs the angle moved from the measurement start position.
  When using with an electric actuator, the amount of movement from the home position is unknown, so it is necessary to return to the home position before operating the actuator.
- Absolute encoder
  An encoder that measures and outputs the angle moved from the home position. When using with an electric actuator, it is not necessary to return to the home position before operating the actuator because it outputs the amount of movement from the home position.
- Battery-less absolute encoder
  An absolute encoder that does not require a battery to store the position.

Overhang amount
It indicates the distance from the center of the top surface of the slider to the center of gravity of the object transferred. In the catalog, the amount of overhang that is allowed in the front-back, left-right, and up-down directions is listed for each mass.

Regenerative current
Current that is generated by the motor operating like a generator when the moving part of the actuator is moved by an external force. Reverse current flows from the motor to the controller, causing malfunction or damage.

Portable mass
It indicates the maximum mass that the actuator can transfer.

Allowable thrust load
Limit value of the load that can be applied in the direction of the actuator rotation axis. WS is used in this Instruction Manual, the instruction manual described in the “Instruction manual for this product”, and the catalog.

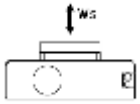

Allowable radial load
Limit value of the load that can be applied perpendicular (laterally) to the actuator rotation axis. WR is used in this Instruction Manual, the instruction manual described in the “Instruction manual for this product”, and the catalog.

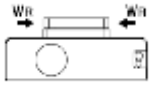

Allowable moment load
Limit value of the load that can be applied in the direction of tilting the actuator rotation axis. M is used in this Instruction Manual, the instruction manual described in the “Instruction manual for this product”, and the catalog.

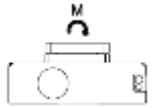

Home position
Position to be the reference (0 mm) for actuator operation.

Positioning repeatability
A term that is used only for grippers. It indicates the difference between the maximum and minimum stop positions when positioning operation is repeated from the same direction to the same position.

Repeatability
It indicates the difference between the maximum and minimum stop positions when positioning operation is repeated from the same direction to the same position. However, in the case of grippers, it indicates the variation when the same workpiece is repeatedly gripped under the same operating conditions.

Grease
It is applied to bearings, bearings, etc., to reduce friction and smooth the operation of the machine. Because the performance cannot be demonstrated due to deterioration of grease or adhesion of foreign material, periodic maintenance is required.

Surge protector
A device that protects equipment and communication equipment from transient abnormal high voltage such as lightning.

Servo OFF
It indicates that the motor is not energized.

Servo ON
It indicates that the motor is energized.

Cyclic communication (transmission)
It indicates periodic communication between the host device (PLC, etc.) and the controller.

Subnet mask
A value that identifies in the IP address the part indicating which network it belongs to (network range) and the part indicating which device in the network. The subnet mask value tells you how many bits from the beginning of the IP address indicate the network range.



Jog operation
While the travel command is issued, the actuator continues to operate at the set speed.

Slave station
A general term for stations other than the master station.

Static allowable moment
Limit value of the load moment that can be applied to the slider when the actuator is stationary. How to apply each moment in the slider type is as follows.

• Pitching moment
A moment acting in the front-rear direction on the slider movement axis. MP is used in this Instruction Manual, the instruction manual described in the “Instruction manual for this product”, and the catalog.



• Yawing moment
A moment that acts in the left-right direction on the slider movement axis. MY is used in this Instruction Manual, the instruction manual described in the “Instruction manual for this product”, and the catalog.



• Rolling moment
A moment that acts in the axial rotation direction on the slider movement axis. MR is used in this Instruction Manual, the instruction manual described in the “Instruction manual for this product”, and the catalog.



Installation category
A concept that expresses how well an electrical device can withstand the application of a transient voltage from an AC power source. The installation category 2 corresponds to “primary side circuit for equipment using a power cord connected to an outlet”.

Full-duplex communication
A communication method that allows simultaneous transmission and reception.

The number of stations occupied
In the CC-Link specification, a value that indicates how much traffic the controller occupies in the communication in the system. Since the number of stations that can be used by one master station is fixed, the total number of stations occupied by the controller and other units connected to the master station must be less than that value.

Soft limit
It indicates the limit of the operating range set in the controller.

Dynamic brake
A method that quickly stops the rotation of the motor by consuming rotational energy as heat energy by short-circuiting the motor terminals via a resistor in the event of a power failure or emergency stop. Since there is no holding torque during stop, it is necessary to use an electromagnetic brake for vertical installation.

Electromagnetic brake
A mechanism that mechanically fixes the output shaft of the motor to prevent the workpiece from falling off when becoming the servo OFF state due to power failure or an alarm in the vertical installation state. Because it is a brake for holding, it cannot be used for stopping during operation.

Electric Actuator
It is a combination of a motor and mechanical parts, and can control operations such as speed, angle, and force. The rotational force of the motor is transmitted to the drive system and converted into rotational motion or linear motion.

Default gateway
It indicates the IP address of a relay device (such as a router) that connects the inside network to the outside network. When sending or receiving data to or from a device at an address other than the network range set by the subnet mask, the relay device set by the default gateway is always passed through.

Screw lead
It refers to the distance that the workpiece can be moved when the motor rotates once in the electric actuator.

Noise filter
An electrical circuit or electronic circuit that removes noise, or a device that contains it.

Backlash
A mechanical play in gears, etc. The lower the backlash, the less rattling.

Parameter
Parameters let you set basic items for operating the actuator. In addition to the settings related to the actuator operation, settings related to communication with the PLC and warnings are also set with parameters.

Half-duplex communication
A communication method in which both transmission and reception cannot be performed at the same time (only one of them can be performed).

Fast Ethernet
It is standardized by IEEE802.3u and is a standard that improves the transmission speed of Ethernet to 100 Mbps.

Function block (FB)
It is a component of a circuit block that is used repeatedly so that it can be reused in a sequence program. By making them into the components, the control that combines multiple functions can be simplified as if it were a single command.

Ferrite core
It is magnetic material using ferrite material. It is used to attenuate high frequency noise.

Process data output / PD(out)
It indicates the data to be written from the host device (PLC, etc.) to the controller in IO-Link specification communication.

Process data input / PD(in)
It indicates the data that the host device (PLC, etc.) reads out from the controller in IO-Link specification communication.

Point data
In the point data, the actuator operation pattern such as the target position and speed is set for each point number. In ECG series, the operation pattern for 64 points can be set, and the actuator can be operated by specifying the point number and issuing a travel command.

Polling
If multiple devices communicate separately, processing and signals can conflict and cause problems. Polling is the process in which the main device (master station) checks in order whether there are any requests from other devices (slave station) in order to communicate smoothly.
When polling response is being performed, it means that there is polling from the master station to the slave station, and the slave station is responding to the polling from the master station.

Ball screw
A mechanical element that can convert rotational motion to linear motion. Unlike sliding screws, the ball rolls between the screw shaft and nut, reducing energy loss due to friction. It is used to convert the rotational motion of the motor into the linear motion of the actuator.

Baud rate
It indicates the communication speed. A value that indicates how many times per second digital data can be modulated and demodulated.

Protective class IP20 / IP40
The protective class indicates the degree of protection from solid foreign materials such as dust and water. The first digit of the number indicates the degree of protection against the human body and solid foreign materials, and "2" indicates that it is protected against foreign solid materials with a diameter of 12.5 mm or more and "4" indicates that it is protected against foreign solid substances with a diameter of 1.0 mm or more. The second digit of the number indicates the degree of protection against water intrusion, and “0” indicates no protection. It is specified in JIS C 0920 and IEC 60529.

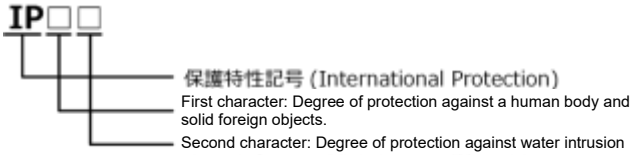

Master station
A station that controls the entire network. One master station is required for one network.

Mechanical end
A position where the moving part of the actuator stops mechanically.

Message communication (transmission)
It indicates communication that occurs irregularly (when necessary) between the host device (PLC, etc.) and the controller.

Remote device station
A station that cyclically transmits bit-wise input / output signal and word-based input / output data to the master station in the communication of CC-Link specification.

Remote output
It indicates bit-wise data that is written from the host device (PLC, etc.) to the controller in the communication of CC-Link specification.

Remote input
It indicates bit-wise data that the host device (PLC, etc.) reads out from the controller in the communication of CC-Link specification.

Remote register (output)
It indicates 16-bit unit (1 word) data that is written from the host device (PLC, etc.) to the controller in the communication of CC-Link specification.

Remote register (input)
It indicates 16-bit unit (1 word) data that the host device (PLC, etc.) reads out from the controller in the communication of CC-Link specification.

Lost motion
It is the maximum value of the difference between the average values at the stop position after rotating in the forward and reverse directions multiple times. It is affected by the backlash and the rigidity of the mechanism.