Parallel cam drive

● Common specifications

※Option Reducer TE Series has been discontinued.

1. Rotational direction of input/output shaft

The parallel cam index drive's output shaft rotates in the direction opposite the input shaft (cam shaft) viewed from the input shaft side. The input shaft allows either clockwise or counterclockwise rotation.

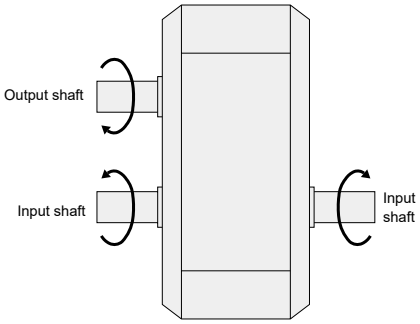

Reference: HO reducer installation and shaft rotation direction

Left shaft installation (on housing side)		Right shaft installation (on housing plate side)	
A 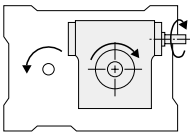	J 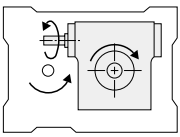	E 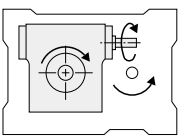	N 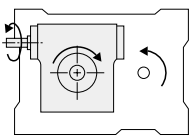
B 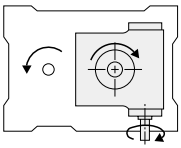	K 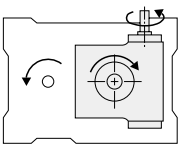	F 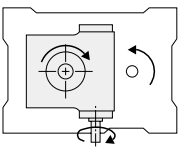	P 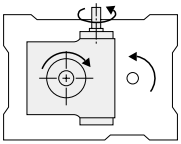
C 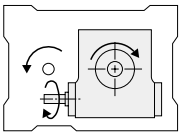	L 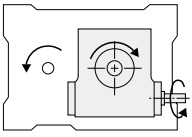	G 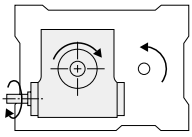	Q 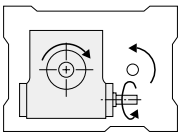
D 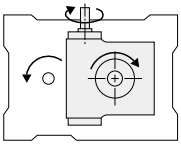	M 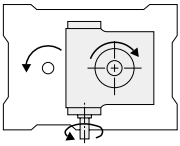	H 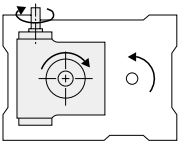	R 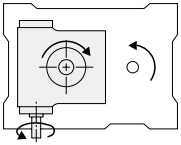

* Combinations where the rotation is opposite the direction of the arrows are also possible.

2. Installation position and input/output shaft layout

Shaft layout code	Meaning
S	Standard layout
R	Reverse layout Note: Output shaft comes out on housing plate side.
1	Output shaft comes out opposite to the input shaft.
2	Output shaft comes out on the same side as the input shaft.
3	Input shaft comes out on both sides.

Common specifications

PCIS shaft layout and installation position

PCIS ***-*** *** ** **^{GH}

Shaft layout G / Position H	S1 (Model No. display: 1)	S2 (Model No. display: 2)	S3 (Model No. display: 3)
1	1 1	2 1	3 1
2	1 2	2 2	3 2
3	1 3	2 3	3 3
4	1 4	2 4	3 4
5	1 5	2 5	3 5
6	1 6	2 6	3 6

Input shaft

Output shaft

Oil filler

Oil level gauge

Drain port

Housing plate

PCIS shaft layout and installation position

PCIS ***-*** *** ** **^{GH}

Shaft layout G / Position H	R1 (Model No. display: 4)	R1 (Model No. display: 5)	R3 (Model No. display: 6)
1	4 1	5 1	6 1
2	4 2	5 2	6 2
3	4 3	5 3	6 3
4	4 4	5 4	6 4
5	4 5	5 5	6 5
6	4 6	5 6	6 6

Input shaft

Output shaft

Oil filler

Oil level gauge

Drain port

Housing plate

● Common specifications

3. Diameter of the stepped section of the input/output shaft

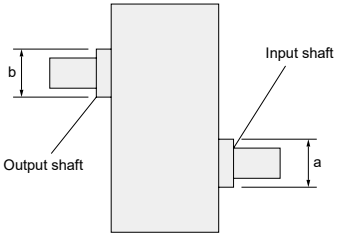

Size \ Dimensions	a	b
040	ø 15	ø 15
050	ø 17	ø 17
063	ø 22	ø 22
080	ø 28	ø 28
100	ø 35	ø 35
125	ø 40	ø 40
160	ø 48	ø 48
200	ø 65	ø 65
250	ø 75	ø 75

Discontinue

4. Optional worm reducer

List of standard mounting worm reducers

Main model No.		HO reducer Size	Reduction ratio Value in ( ) represents the special reduction ratio	TE reducer Size	Reduction ratio
PCIS PCOS	040	-	-	-	-
	050	HO 32	1/20, 1/40, 1/60 (1/30, 1/50)	TE 35	1/10, 1/20, 1/30 1/40, 1/50, 1/60
	063	HO 40	1/20, 1/40, 1/60 (1/30, 1/50)	TE 42	1/10, 1/20, 1/30 1/40, 1/50, 1/60
	080	HO 50	1/20, 1/30, 1/40 1/50, 1/60	TE 51	1/10, 1/20, 1/30 1/40, 1/50, 1/60
	100	HO 60	1/20, 1/30, 1/40 1/50, 1/60	TE 63	1/10, 1/20, 1/30 1/40, 1/50, 1/60
	125	HO 80	1/20, 1/30, 1/40 1/50, 1/60	TE 80	1/10, 1/20, 1/30 1/40, 1/50, 1/60
	160	HO100	1/20, 1/30, 1/40 1/50, 1/60	TE100	1/10, 1/20, 1/30 1/40, 1/50, 1/60
	200	HO100	1/20, 1/30, 1/40 1/50, 1/60	TE100	1/10, 1/20, 1/30 1/40, 1/50, 1/60
		HO135	1/20, 1/40, 1/60 (1/30, 1/50)	TE150	1/10, 1/20, 1/30 1/40, 1/50, 1/60
	250	HO135	1/20, 1/40, 1/60 (1/30, 1/50)	TE150	1/10, 1/20, 1/30 1/40, 1/50, 1/60

* The above indicates the combinations of standard installations. Check the reducer load torque (Ter) and the reducer rated output torque before use.

5. Optional/Torque saver (TSF4 to TSF18)
Torque guard (TGX20 to TGX70)
+ release detection proximity switch

Proximity switch model No.

Torque saver Torque guard	SW model No.	Manufacturer
TSF4	TL-W3MC1	OMRON
TSF5 to TSF18	TL-W5MC1	
TGX20 to TGX70		

Parallel cam drive

1. Standard model No. Index series

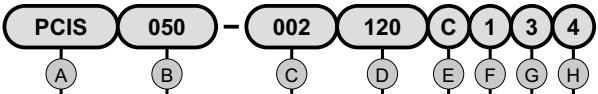

(A) Model	(B) Distance between shafts		(C) Indexing number (n)		(D) Total index angle (θt)		(E) Cam curve		(F) Number of dwell intervals of the cam		(G) Input/Output layout	
PCIS	040	40 mm	001	1	090	90°	S	MS curve (Standard)	1	1 dwell Index number: 1.2.3.4	1	S1
	050	50 mm	002	2	120	120°					2	S2
	063	63 mm	003	3	150	150°	C	MC curve (MCV50)	2	2 dwell Index number: 6.8	3	S3
	080	80 mm	004	4	180	180°					4	R1
	100	100 mm	006	6	210	210°					5	R2
	125	125 mm	008	8	240	240°					6	R3
Discontinue	160	160 mm			270	270°						
	200	200 mm			300	300°						
	250	250 mm			330	330°						

For details of the timing chart, refer to B-7.

When a torque saver (optional) and a torque guard (optional) are added, the code will be either 1 (S1) or 4 (R1).

Example of model No. (1)

PCIS063-008270S216

Shaft interval ..... 63 mm
Index number 8
Total index angle ..... 270° (135° × 2)
Cam curve ..... MS curve
Dwell No. of the cam ..... 2 dwell
Input/Output layout S1
Installation position ..... Position #6

	Ⓗ Installation position		
■S1 (standard) 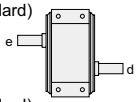 ■S2 (standard) 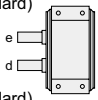 ■S3 (standard) 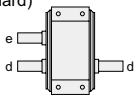 ■R1 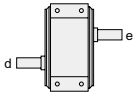 ■R2 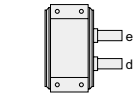 ■R3 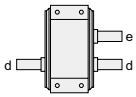	1 Position #1 2 Position #2 3 Position #3 4 Position #4 5 Position #5 6 Position #6 Depending on the orientation of the index drive, the oil supply port, the drain port and the oil level gauge will be located at different positions and so it is necessary to choose one of the orientations from (1) to (6).	■Position #1 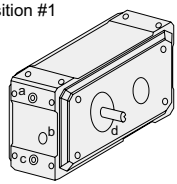	■Position #2 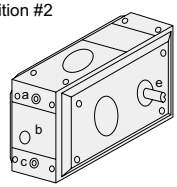
		■Position #3 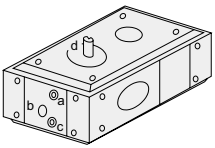	■Position #4 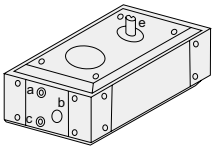
		■Position #5 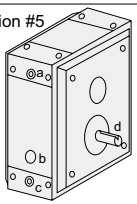	■Position #6 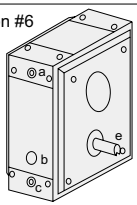

a: Oil supply port b: Oil level gauge c: Drain port d: Input shaft e: Output shaft

Parallel cam drive

2-1. Model No. with options

Common for index and oscillating series

PCIS	100	–	001	300	S	1	1	1	–	N	W	F	0	6	6	N	G	08	A
Main model No.										I	J	K	L	M	N	O	P	Q	R

Product specifications

Compact | Standard | Table | Wide angle | Basic | Parallel cam drive | Roller gear cam drive | Circular | Linear | Pick and Place drive | Option

Input/Output shaft specification code

(I) Input shaft specification code (left shaft)

N	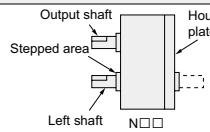
K	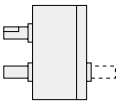
W / E	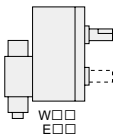
V / L	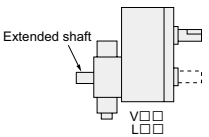

(J) Input shaft specification code (right shaft)

N	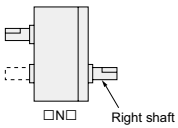
K	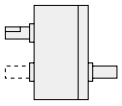
W / E	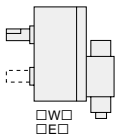
V / L	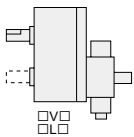

(K) Output shaft specification code

N	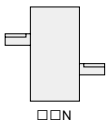
K	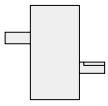
F / X	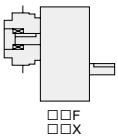
S / Y	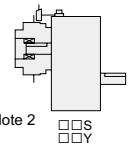

N	Standard (with keyway)
K	No keyway
W	With the worm reducer (W: HO reducer, E: TE reducer)
E	* Since the specification for the worm reducer is required, determine "Worm reducer installation specification code."
V	With the worm reducer (Extended shaft: HO reducer, L: TE reducer)
L	* Since the specification for the worm reducer is required, determine "Worm reducer installation specification code."

N	Standard (with keyway)
K	No keyway (straight shaft)
F	With Torque saver (TSF)
X	With Torque guard (TGX)
S	With Torque saver (TSF) + proximity switch for release detection
Y	With Torque guard (TGX) + proximity switch for release detection

Since the specifications for a torque saver and a torque guard are required when F, X, S, or Y is selected, determine "Torque saver/guard installation specification code."

■ Relationship between the input/output shaft layout and the input/output shaft specification code

Input/Output shaft Layout	S1			S2			S3			R1			R2			R3		
	(I)	(J)	(K)	(I)	(J)	(K)	(I)	(J)	(K)	(I)	(J)	(K)	(I)	(J)	(K)	(I)	(J)	(K)
Available code	N	NKWVEL	NKFXSY	NK	N	NK	NK	NKWVEL	NK	NKWVEL	N	NKFXSY	N	NK	NK	NKWVEL	NK	NK

▼ When a worm reducer is installed

(L)(M)(N)(O)(P) Worm reducer installation specification code						
(L)(M) Reducer size		(N) Reduction ratio		(O) Clutch/Brake:		(P) Mounting direction
03	HO32, TE35	1	1/10 (TE reducer only)	Y	Clutch/Brake: Yes	Left shaft installation: A, B, C, D / J (AR), K (BR), L (CR), M (DR)
04	HO40, TE42	2	1/20			
05	HO50, TE51	3	1/30			
06	HO60, TE63	4	1/40	N	Clutch/Brake: No	
08	HO80, TE80	5	1/50			
10	HO100, TE100	6	1/60			
13	HO135, —					
15	—, TE150		* Those of 1/30 and 1/50 for HO32, HO40 and HO135 have special ratio. Verify the delivery schedule.			Right shaft installation: E, F, G, H / N (ER), P (FR), Q (GR), R (HR)
	* Refer to D-551 to 588.					

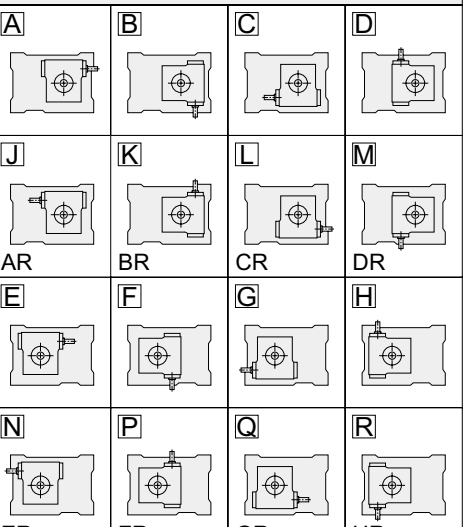

* While a torque saver/guard is installed onto the output shaft and when none of the worm reducer can be installed onto the input shaft, insert a hyphen "-" at (L) and continue with the torque saver/guard installation specification code.
Example: PCIS063-003270S111-NNF-06D

PCIS100-001300S111-NW F066NG **08 A** Q R

▼ When a torque saver is installed

(Q)(R) Torque saver mounting specification code				Application index size
(Q) TSF size		(R) Release torque range		
04	TSF4	A B C D	A B C D	040
05	TSF5			050/063
06	TSF6			063/080
08	TSF8			100
11	TSF11			125
14	TSF14			160
18	TSF18			200/250

▼ When a torque guard is installed

(Q)(R) Torque guard mounting specification code				Application index size
(Q) TGX size		(R) Trip torque range		
20	TGX20	L M H	LC MC HC	050/063
35	TGX35			080
50	TGX50			100
70	TGX70			125

Note 1: When you specify the release (trip) torque of a torque saver/guard, notify CKD of the value. Otherwise, the product will be shipped adjusted at the min. value within the adjusting range.
* Refer to D-589 to 619.
Note 2: The proximity switch for release detection of a torque saver/guard is the NO type. NC type is also available.

Parallel cam drive

2-2. Examples of model numbers with options / 3. Custom specification model No.

When you place an order with a model number, ensure that it exactly matches what you order.
Even if 1 letter is incorrectly written, the product will be different with different specifications.
In order for us to deliver what you really want, carefully determine the model number referring to the following examples.

Example of model No. (2)

PCIS250-004090S135-KKK
Input shaft specification
  Left shaft: No keyway
  Right shaft: No keyway
Output shaft specification
  No keyway

Example of model No. (3)

PCIS160-003180S111-NWN104YQ
Input shaft specification
  Left shaft: Standard
  Right shaft: Worm reducer installed
Output shaft specification: Standard

Worm reducer installation specification
  Reducer size: HO100
  Reduction ratio: 1/40
  Clutch/Brake: Yes
  Mounting direction: Q

Example of model No. (4)

PCIS040-004090S115-NNS-04A
Input shaft specification
  Left shaft: Standard
  Right shaft: Standard
Output shaft specification: Torque saver + proximity switch for release detection installed

Torque saver mounting specification
  TSF size: TSF4
  Release torque range: A

Example of model No. (5)

PCIS160-001300S141-WNF102YL14C
Input shaft specification
  Left shaft: Worm reducer installed
  Right shaft: Standard
Output shaft specification: Torque saver installed

Worm reducer installation specification
  Reducer size: HO100
  Reduction ratio: 1/20
  Clutch/Brake: Yes
  Mounting direction: L

Torque saver mounting specification
  TSF size: TSF14
  Release torque range: C

● Special specification model number

Common for index and oscillating series

PCIS 063 – 004 090 S 1 3 1 – X012345

Main model No.

Special specification No.

* Add "-X (6 digit number)" after the main model No. as the special specification number.
The special specification model number shall be determined after a consultation with the customer.
Options other than the standard are available upon request. Please provide us with the specifications.
* High speed specifications (input shaft rotational speed of 200 rpm or higher) are deemed to be special specifications.

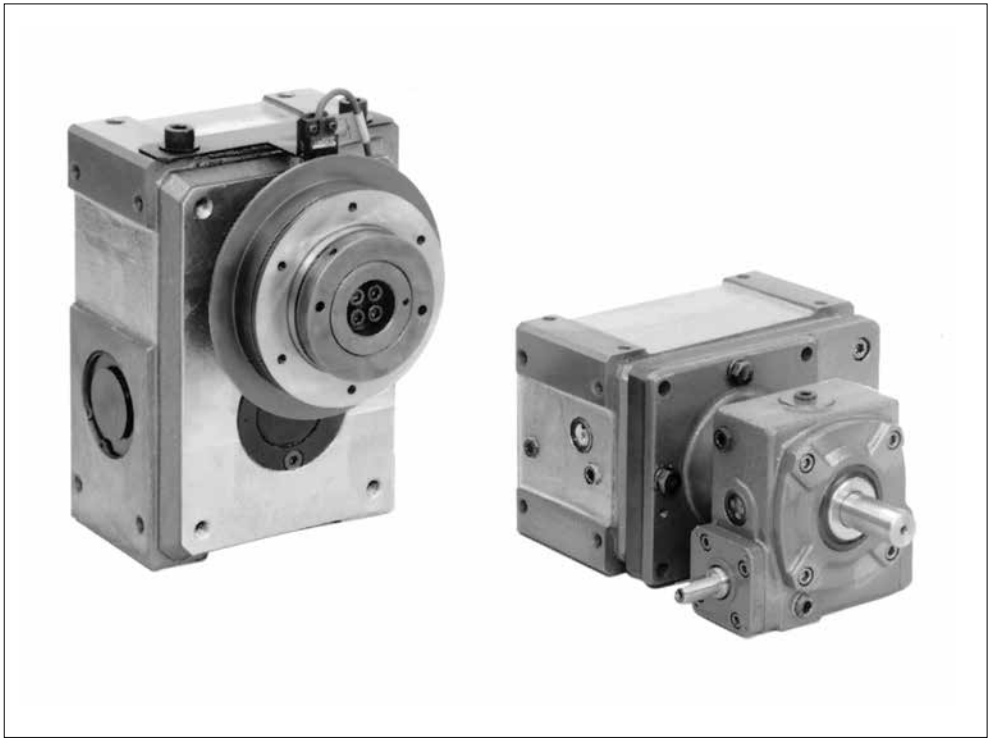

Parallel cam drive

1. Standard model No. Oscillating series

PCOS 125 – 030 120 S T 3 4
A B C D E F G H

A Model	B Distance between shafts		C Oscillating angle (ψ)		D Total index angle (θt)		E Cam curve		F Orbit pattern
PCOS	040	40 mm	015	15°	060	60° (30°×2)	S	MS curve (Standard)	T (Standard)
	050	50 mm	030	30°	090	90° (45°×2)	C	MC curve (MCV50)	S
	063	63 mm	045	45°	120	120° (60°×2)			
	080	80 mm			180	180° (90°×2)			
	100	100 mm			240	240° (120°×2)			
	125	125 mm			300	300° (150°×2)			
Discontinue	160	160 mm			360	360° (180°×2)			
	200	200 mm							
	250	250 mm							

When the input shaft starts to rotate from the rotation reference point, the output shaft rotates in sequence from 1 and 2 as in the figure.

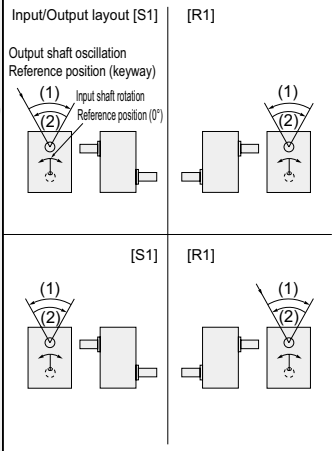

For details of the timing chart, refer to B-7.

Example of model No. (1)

PCOS080-030240ST15

Shaft interval .....80 mm
Oscillating angle .....30°
Total index angle .....240° (120° × 2)
Cam curve .....MS curve
Orbit pattern .....T
Input/Output layout S1
Installation position .....Position #5

	Ⓖ Input/Output layout		Ⓗ Installation position	
1	S1	■S1 (standard)	1	Position #1
2	S2	■S2 (standard)	2	Position #2
3	S3	■S3 (standard)	3	Position #3
4	R1	■R1	4	Position #4
5	R2	■R2	5	Position #5
6	R3	■R3	6	Position #6

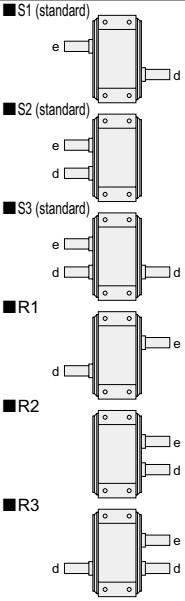

Depending on the orientation of the index drive, the oil supply port, the drain port and the oil level gauge will be located at different positions and so it is necessary to choose one of the orientations from (1) to (6).

■Position #1

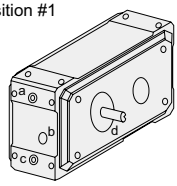

■Position #2

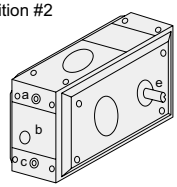

■Position #3

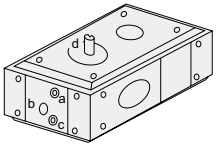

■Position #4

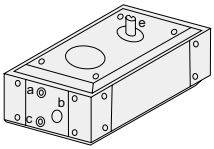

■Position #5

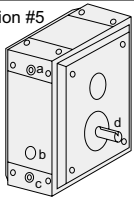

■Position #6

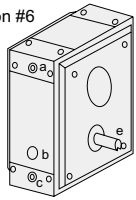

a: Oil supply port b: Oil level gauge c: Drain port d: Input shaft e: Output shaft

* When a torque saver (optional) and a torque guard (optional) are added, the code will be either 1 (S1) or 4 (R1).

● Standard specifications

Dimensions

CAD

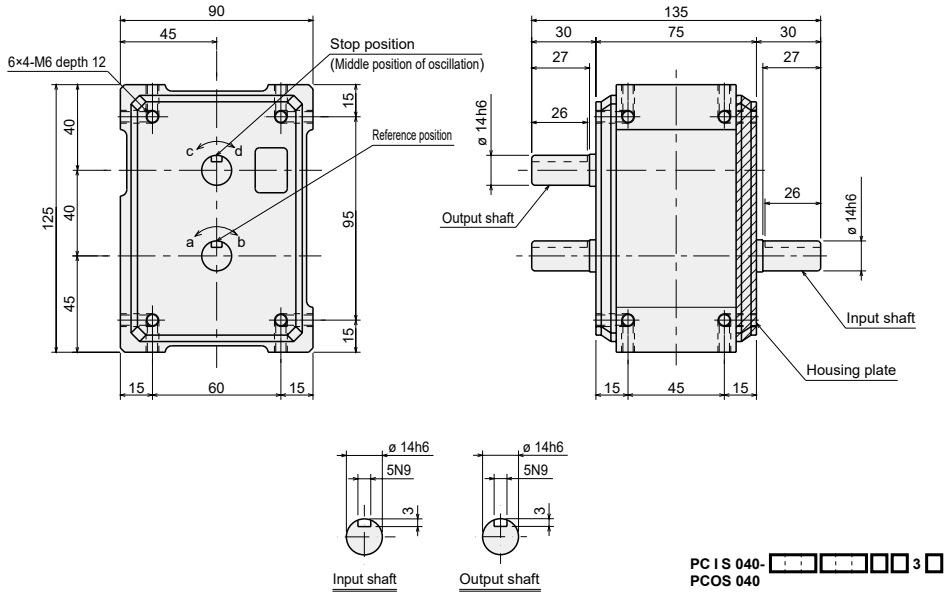

Installation position and oil supply/drain port and oil level gauge positions

● Oil fill/drain port (Rc1/4)
○ Oil level gauge (ø 20)

Installation position	1	2	3
Series	PCIS/PCOS	PCIS/PCOS	PCIS/PCOS
Dimensions	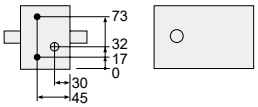	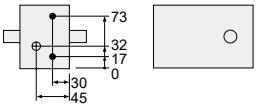	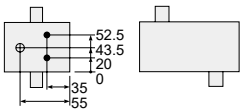

Installation position	4	5	6
Series	PCIS/PCOS	PCIS/PCOS	PCIS/PCOS
Dimensions	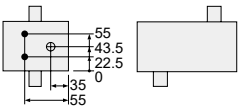	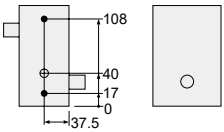	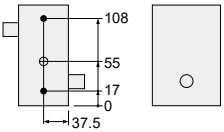

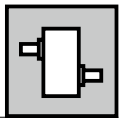

Characteristics

Descriptions	Unit	Characteristics	
		Output shaft	Input shaft
Allowable thrust force	N	480	280
Allowable radial force	N	350	200
Allowable bending moment	N·m	18	-
Moment of inertia	kg·m^2	1.09 × 10^{-4}	1.29 × 10^{-4}

Descriptions	Unit	Characteristics
Internal frictional torque (Tin)	N·m	1.1
Product weight	kg	3
Oil level	ℓ	0.12
Paint color		Silver

Accuracy

Index accuracy (sec.)		
Indexing accuracy	1 dwell	± 90
	2 dwell	± 180
	3 dwell	-
	4 dwell	-
Repeatability		90

Oscillating accuracy (sec.)	
Indexing accuracy	± 180
Repeatability	90

* For the dwell accuracy, please contact CKD.

List of index angles

Index series **PCIS 040** Cam curve/MS

Total index angle (θt) / Index number (n)		90	120	150	180	210	240	270	300	330
1 dwell	1								○	○
	2			○	○	○	○	○	○	○
	3	○	○	○	○	○	○	○	○	○
	4	○	○	○	○	○	○	○	○	○
2 dwell	6		○	○	○	○	○	○	○	○
	8	○	○	○	○	○	○	○	○	○

Cam curve/MC

Total index angle (θt) / Index number (n)		90	120	150	180	210	240	270	300	330
1 dwell	1					○	○	○	○	○
	2		○	○	○	○	○	○	○	○

Oscillating series **RCOS 040** Cam curve/MS

Total index angle (θt) / Oscillating angle (ψ)	60	90	120	180	240	300	360
45			○	○	○	○	○
30		○	○	○	○	○	○
15	○	○	○	○	○	○	○

● Dimensions with options

With Torque saver (TSF4)

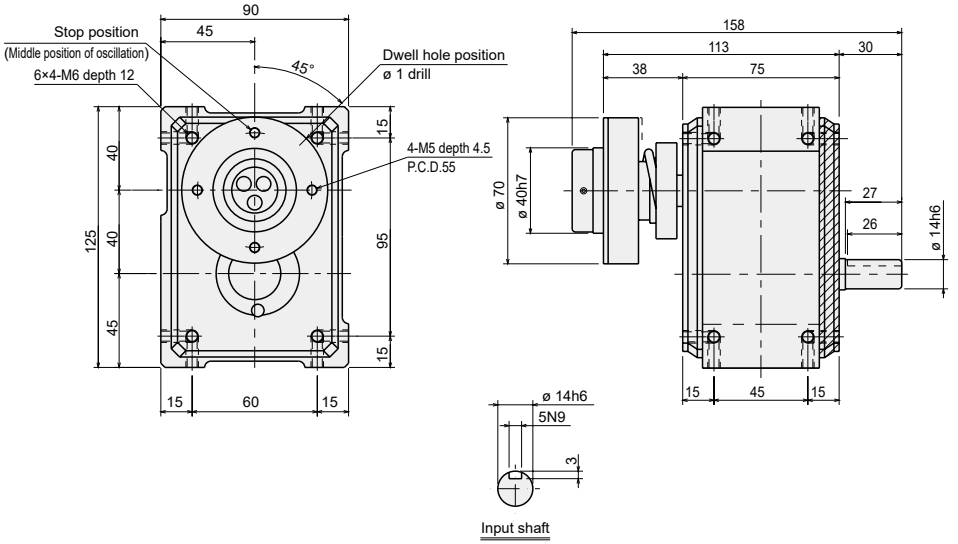

PC I S 040-□□□□□□1□-NNF-04□
PCOS 040

Option	Pick and Place drive		Parallel cam drive	Roller gear cam drive				
	Linear	Circular		Basic	Wide angle	Table	Standard	Compact

● Standard specifications

Dimensions

CAD

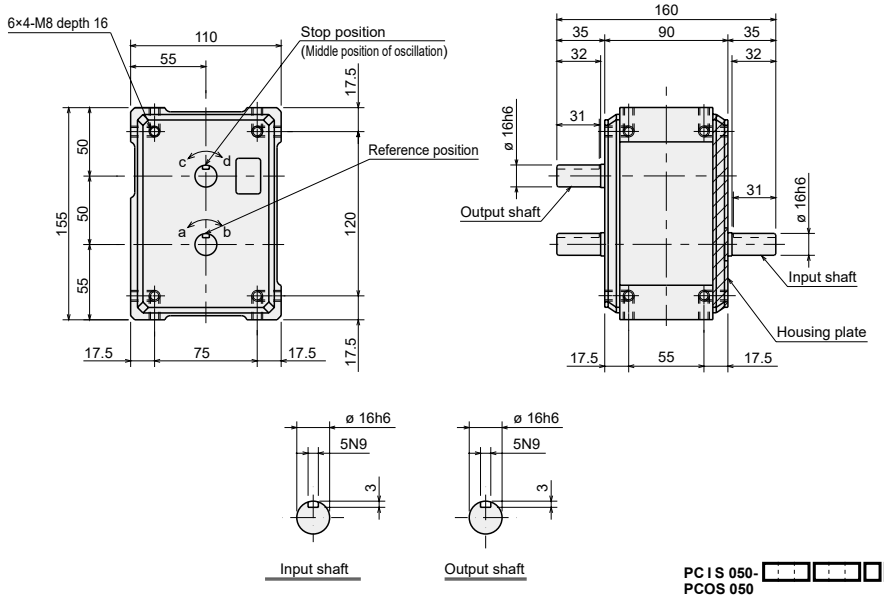

Installation position and oil supply/drain port and oil level gauge positions

• Oil fill/drain port (Rc1/4)
○ Oil level gauge (ø 20)

Installation position	1	2	3
Series	PCIS/PCOS	PCIS/PCOS	PCIS/PCOS
Dimensions	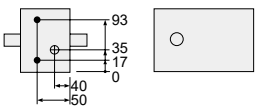	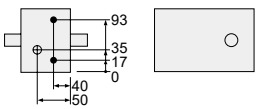	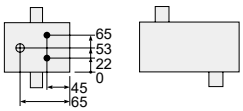

Installation position	4	5	6
Series	PCIS/PCOS	PCIS/PCOS	PCIS/PCOS
Dimensions	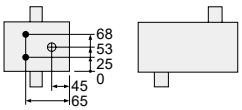	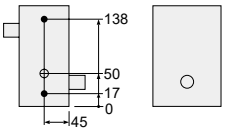	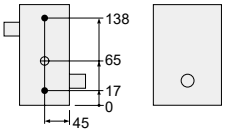

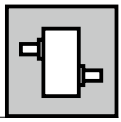

Characteristics

Descriptions	Unit	Characteristics	
		Output shaft	Input shaft
Allowable thrust force	N	1100	650
Allowable radial force	N	780	520
Allowable bending moment	N·m	26	-
Moment of inertia	kg·m^2	3.51 × 10^{-4}	3.18 × 10^{-4}

Descriptions	Unit	Characteristics
Internal frictional torque (Tin)	N·m	1.7
Product weight	kg	6
Oil level	ℓ	0.2
Paint color		Silver

Accuracy

Index accuracy (sec.)		
Indexing accuracy	1 dwell	± 60
	2 dwell	± 140
	3 dwell	-
	4 dwell	-
Repeatability		60

Oscillating accuracy (sec.)	
Indexing accuracy	± 140
Repeatability	60

* For the dwell accuracy, please contact CKD.

List of index angles

Index series **PCIS 050** Cam curve/MS

Total index angle (θt) / Index number (n)		90	120	150	180	210	240	270	300	330
1 dwell	1								○	○
	2			○	○	○	○	○	○	○
	3	○	○	○	○	○	○	○	○	○
	4	○	○	○	○	○	○	○	○	○
2 dwell	6		○	○	○	○	○	○	○	○
	8	○	○	○	○	○	○	○	○	○

Cam curve/MC

Total index angle (θt) / Index number (n)		90	120	150	180	210	240	270	300	330
1 dwell	1					○	○	○	○	○
	2		○	○	○	○	○	○	○	○

Oscillating series **RCOS 050** Cam curve/MS

Total index angle (θt) / Oscillating angle (ψ)	60	90	120	180	240	300	360
45			○	○	○	○	○
30		○	○	○	○	○	○
15	○	○	○	○	○	○	○

● Dimensions with options

With worm reducer (with HO32-C/B)

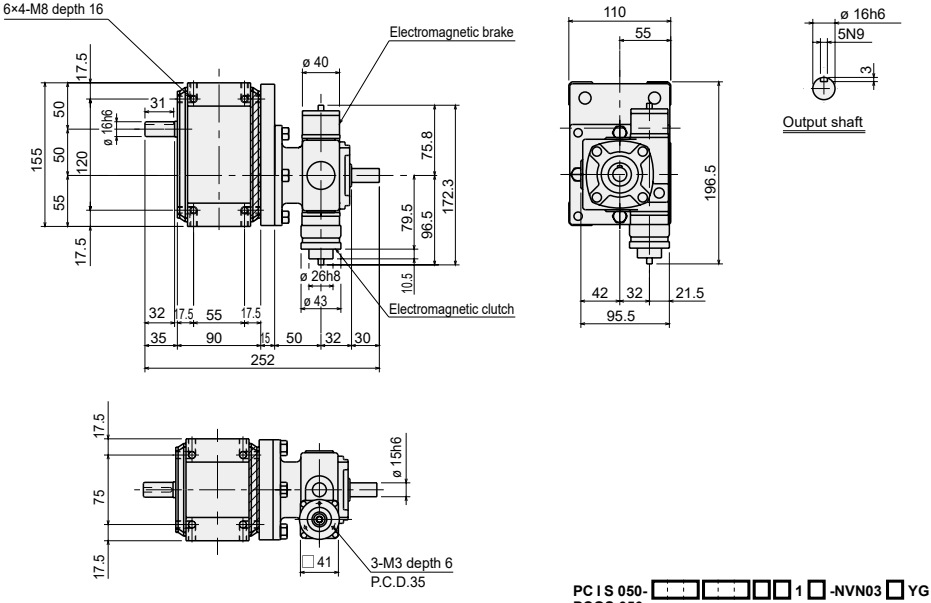

PC I S 050- ☐☐☐☐☐ **1** ☐ **-NVN03** ☐ **YG**
PCOS 050

With worm reducer (without HO32-C/B)

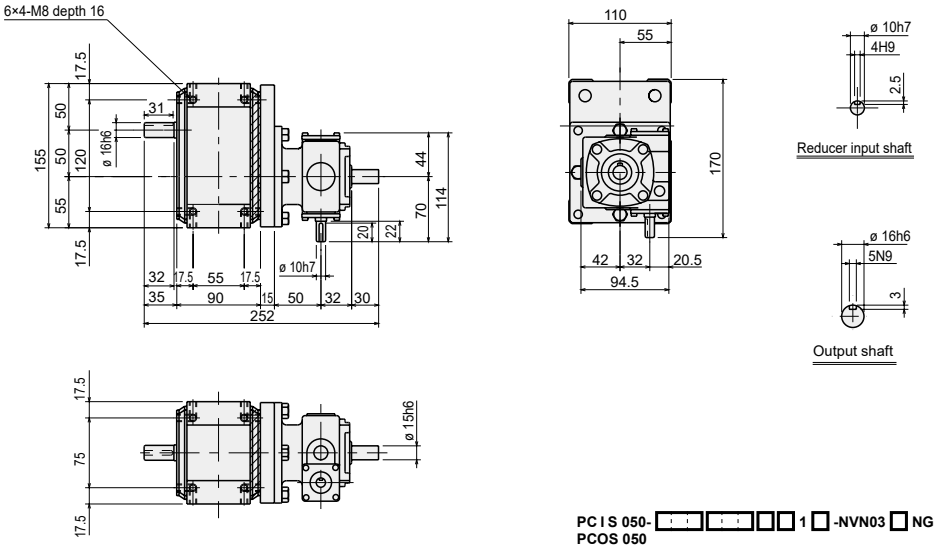

PC I S 050- ☐☐☐☐☐ **1** ☐ **-NVN03** ☐ **NG**
PCOS 050

With Torque saver (TSF5)

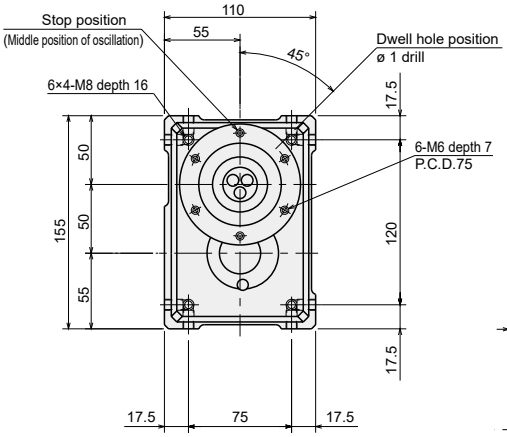

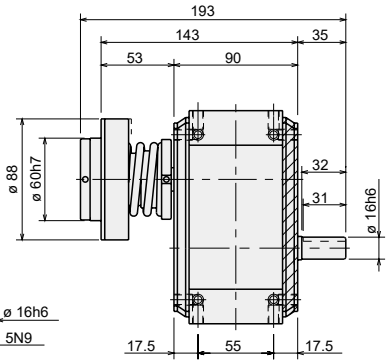

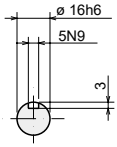

Input shaft

PC I S 050-□□□□1□-NNF-05□
PCOS 050

● Standard specifications

Dimensions

CAD

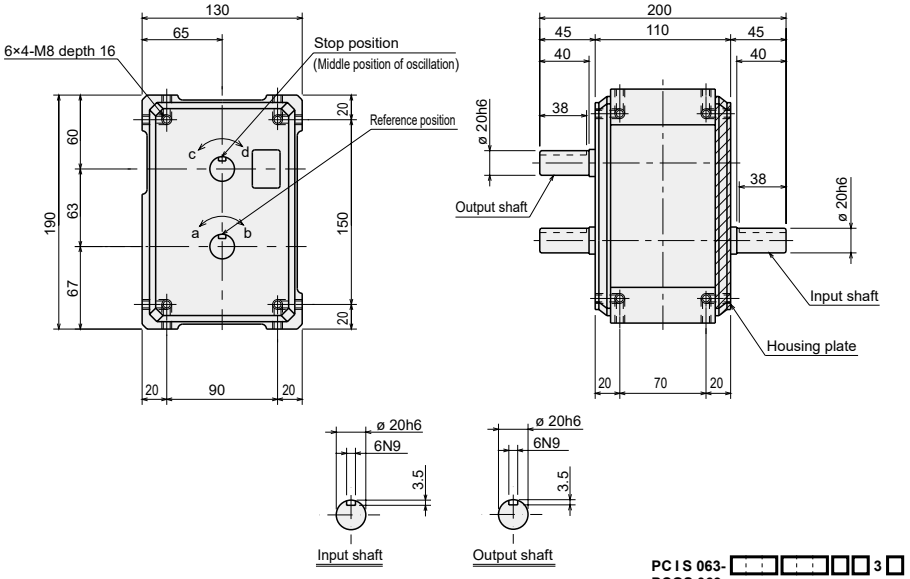

Installation position and oil supply/drain port and oil level gauge positions

• Oil fill/drain port ($Rc^{1}/_{4}$)
○ Oil level gauge (ø 20)

Installation position	1	2	3
Series	PCIS/PCOS	PCIS/PCOS	PCIS/PCOS
Dimensions	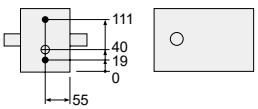	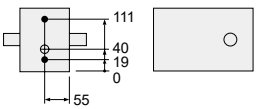	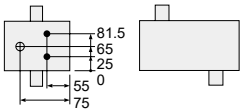

Installation position	4	5	6
Series	PCIS/PCOS	PCIS/PCOS	PCIS/PCOS
Dimensions	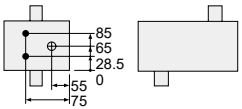	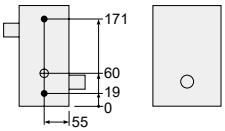	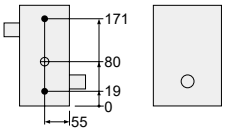

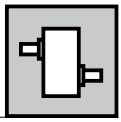

Characteristics

Descriptions	Unit	Characteristics	
		Output shaft	Input shaft
Allowable thrust force	N	2500	1800
Allowable radial force	N	1800	1400
Allowable bending moment	N·m	52	-
Moment of inertia	kg·m^2	8.01 × 10^{-4}	1.27 × 10^{-3}

Descriptions	Unit	Characteristics
Internal frictional torque (Tin)	N·m	3.1
Product weight	kg	11
Oil level	ℓ	0.4
Paint color		Silver

Accuracy

Index accuracy (sec.)		
Indexing accuracy	1 dwell	±60
	2 dwell	±90
	3 dwell	-
	4 dwell	-
Repeatability		60

Oscillating accuracy (sec.)	
Indexing accuracy	±90
Repeatability	60

* For the dwell accuracy, please contact CKD.

List of index angles

Index series **PCIS 063** Cam curve/MS

Total index angle (θt) / Index number (n)		90	120	150	180	210	240	270	300	330
1 dwell	1								○	○
	2			○	○	○	○	○	○	○
	3	○	○	○	○	○	○	○	○	○
	4	○	○	○	○	○	○	○	○	○
2 dwell	6		○	○	○	○	○	○	○	○
	8	○	○	○	○	○	○	○	○	○

Cam curve/MC

Total index angle (θt) / Index number (n)		90	120	150	180	210	240	270	300	330
1 dwell	1					○	○	○	○	○
	2		○	○	○	○	○	○	○	○

Oscillating series **PCOS 063** Cam curve/MS

Total index angle (θt) / Oscillating angle (ψ)	60	90	120	180	240	300	360
45			○	○	○	○	○
30		○	○	○	○	○	○
15	○	○	○	○	○	○	○

● Dimensions with options

With worm reducer (with HO40-C/B)

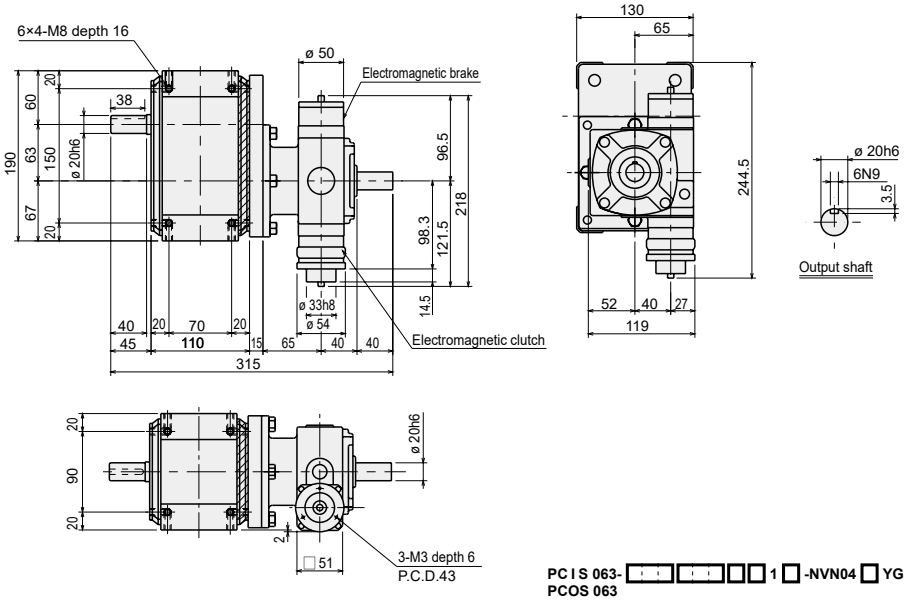

PC I S 063- □□□□□□1□**-NVN04**□**YG**
PCOS 063

With worm reducer (without HO40-C/B)

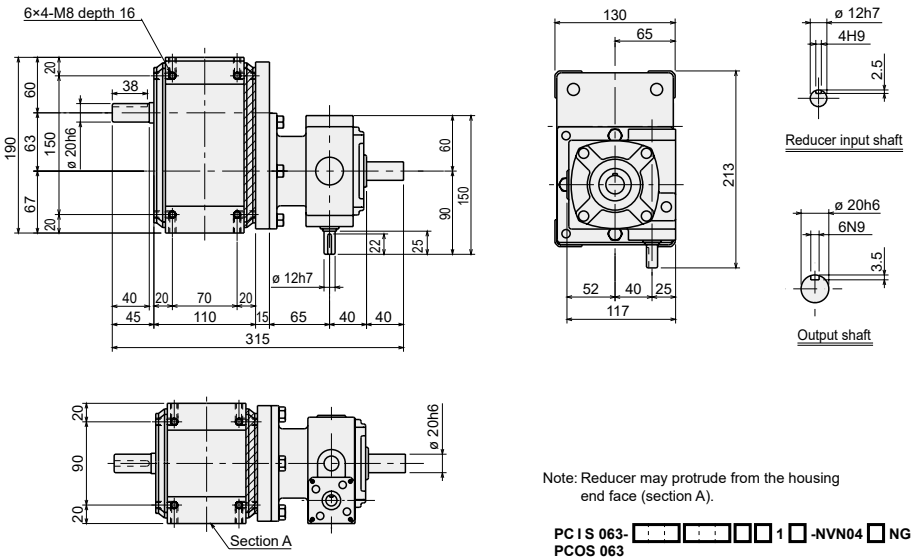

Note: Reducer may protrude from the housing end face (section A).

PC I S 063- □□□□□□1□**-NVN04**□**NG**
PCOS 063

With Torque saver (TSF5)

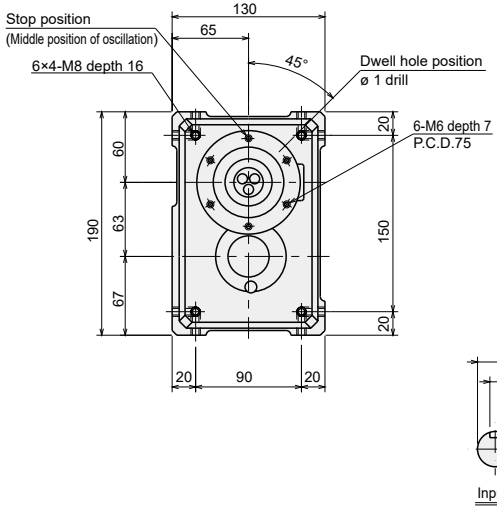

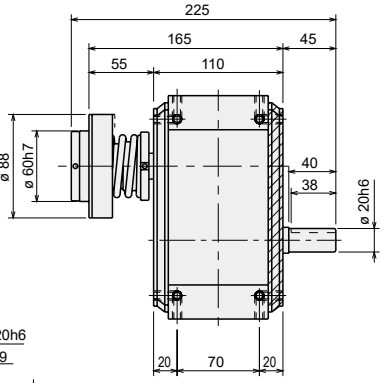

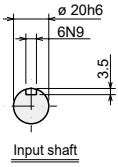

PC I S 063- ☐☐☐ **1** ☐ **-NNF-05** ☐
PCOS 063

With Torque saver (TSF6)

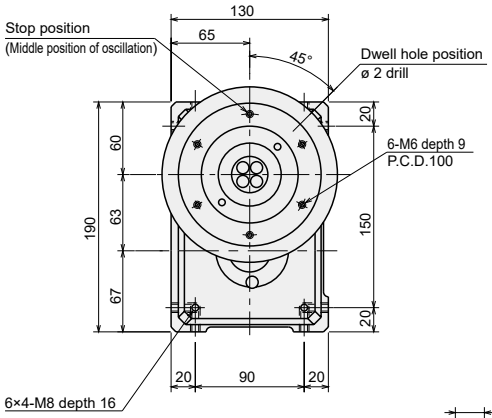

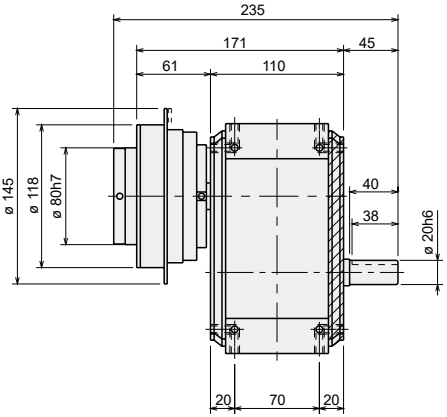

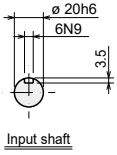

PC I S 063- ☐☐☐ **1** ☐ **-NNF-06** ☐
PCOS 063

● Standard specifications

Dimensions

CAD

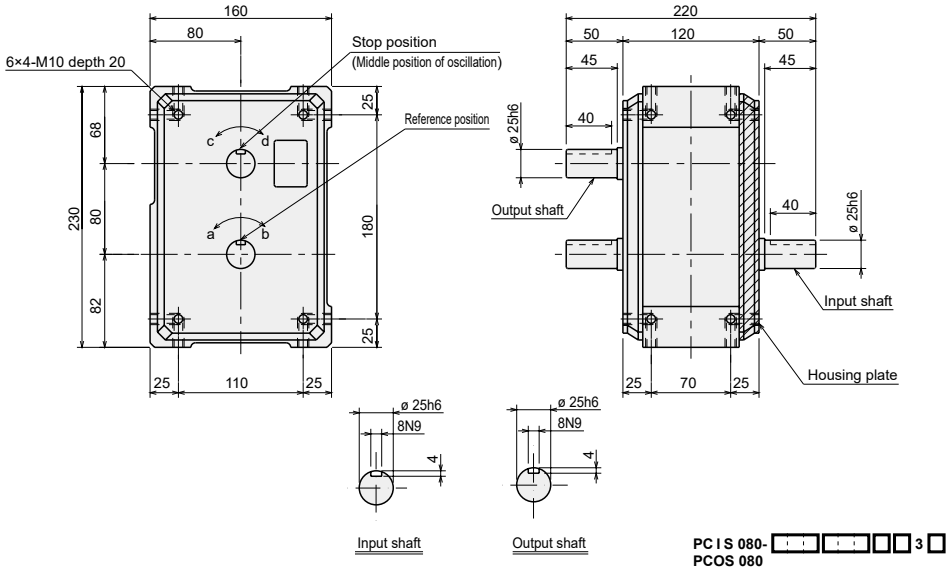

Installation position and oil supply/drain port and oil level gauge positions

● Oil fill/drain port ($Rc^{3}/_{8}$)
○ Oil level gauge (ø 30)

Installation position	1	2	3
Series	**PCIS/PCOS**	**PCIS/PCOS**	**PCIS/PCOS**
Dimensions	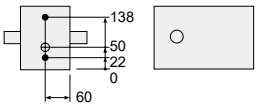	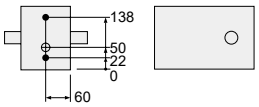	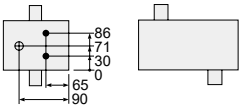

Installation position	4	5	6
Series	**PCIS/PCOS**	**PCIS/PCOS**	**PCIS/PCOS**
Dimensions	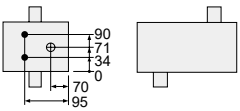	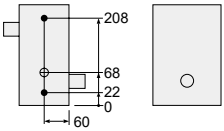	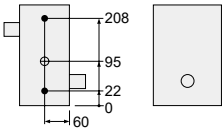

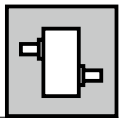

Characteristics

Descriptions	Unit	Characteristics	
		Output shaft	Input shaft
Allowable thrust force	N	3500	2500
Allowable radial force	N	2700	1800
Allowable bending moment	N·m	110	-
Moment of inertia	kg·m^2	2.23 × 10^{-3}	3.73 × 10^{-3}

Descriptions	Unit	Characteristics
Internal frictional torque (Tin)	N·m	4.9
Product weight	kg	19
Oil level	ℓ	0.6
Paint color		Silver

Accuracy

Index accuracy (sec.)		
Indexing accuracy	1 dwell	± 60
	2 dwell	± 90
	3 dwell	-
	4 dwell	-
Repeatability		60

Oscillating accuracy (sec.)	
Indexing accuracy	± 90
Repeatability	60

* For the dwell accuracy, please contact CKD.

List of index angles

Index series **PCIS 080** Cam curve/MS

Total index angle (θt) / Index number (n)		90	120	150	180	210	240	270	300	330
1 dwell	1								○	○
	2			○	○	○	○	○	○	○
	3	○	○	○	○	○	○	○	○	○
	4	○	○	○	○	○	○	○	○	○
2 dwell	6		○	○	○	○	○	○	○	○
	8	○	○	○	○	○	○	○	○	○

Cam curve/MC

Total index angle (θt) / Index number (n)		90	120	150	180	210	240	270	300	330
1 dwell	1					○	○	○	○	○
	2		○	○	○	○	○	○	○	○

Oscillating series **PCOS 080** Cam curve/MS

Total index angle (θt) / Oscillating angle (ψ)	60	90	120	180	240	300	360
45			○	○	○	○	○
30		○	○	○	○	○	○
15	○	○	○	○	○	○	○

● Dimensions with options

With worm reducer (with HO50-C/B)

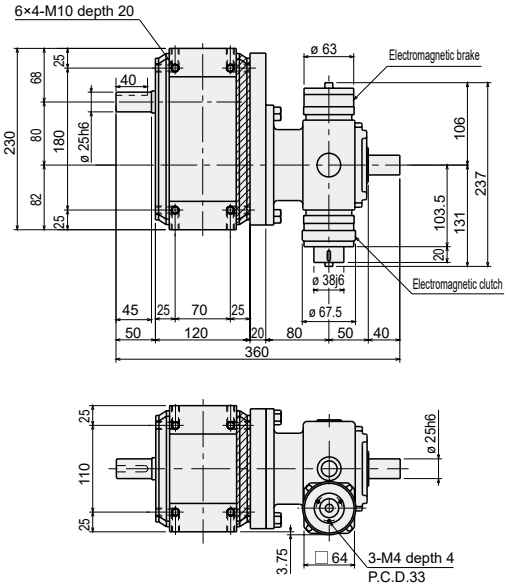

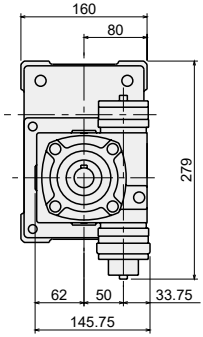

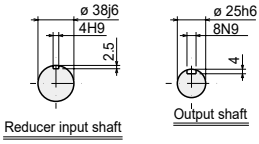

PC I S 080- □□□□□□1□**-NVN05**□**YG**
PCOS 080

With worm reducer (without HO50-C/B)

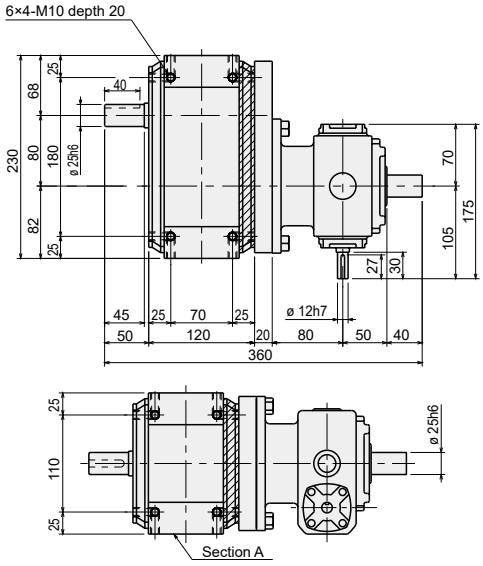

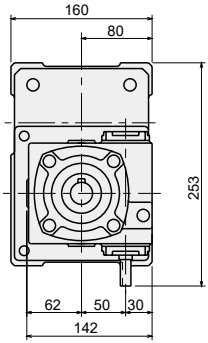

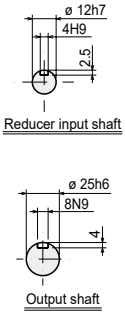

Note: Reducer may protrude from the housing end face (section A).

PC I S 080- □□□□□□1□**-NVN05**□**NG**
PCOS 080

With Torque saver (TSF6)

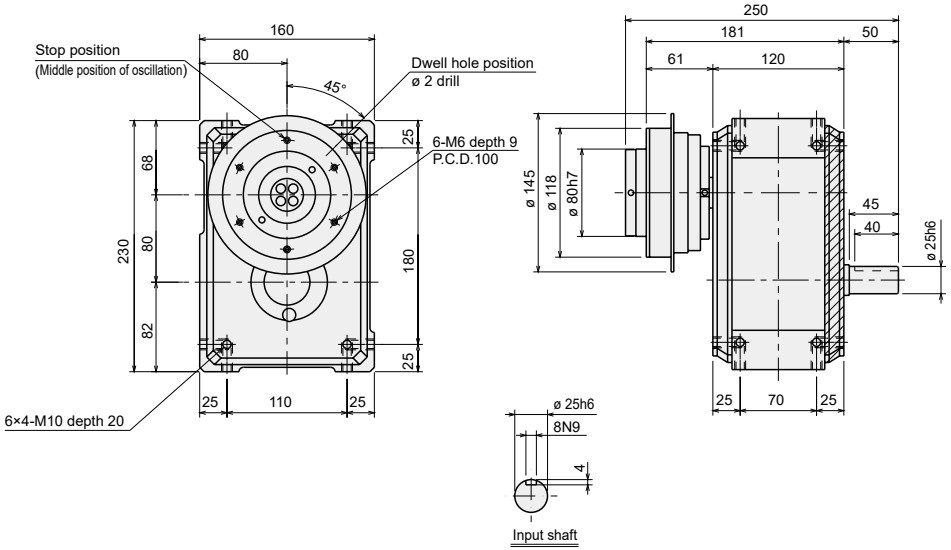

PC I S 080- ☐☐☐☐ **1** ☐ **-NNF-06** ☐
PCOS 080

● Standard specifications

Dimensions

CAD

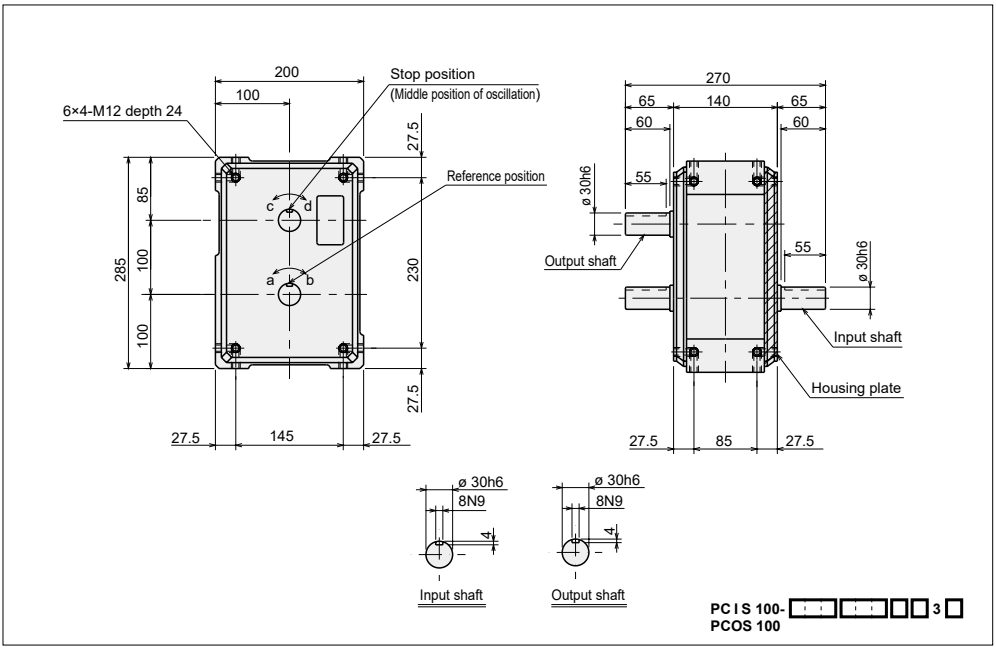

Installation position and oil supply/drain port and oil level gauge positions

• Oil fill/drain port (Rc 3/8)
○ Oil level gauge (ø 30)

Installation position	1	2	3
Series	PCIS/PCOS	PCIS/PCOS	PCIS/PCOS
Dimensions	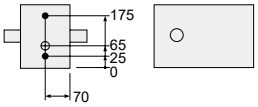	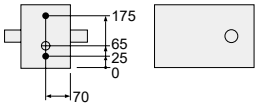	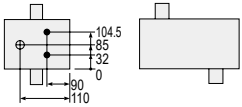

Installation position	4	5	6
Series	PCIS/PCOS	PCIS/PCOS	PCIS/PCOS
Dimensions	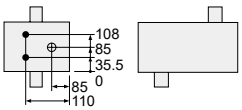	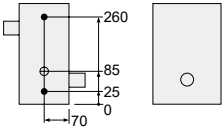	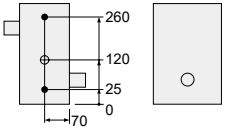

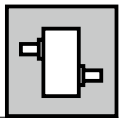

Characteristics

Descriptions	Unit	Characteristics	
		Output shaft	Input shaft
Allowable thrust force	N	5000	3500
Allowable radial force	N	3800	2500
Allowable bending moment	N·m	190	-
Moment of inertia	kg·m^2	7.04 × 10^{-3}	1.04 × 10^{-2}

Descriptions	Unit	Characteristics
Internal frictional torque (Tin)	N·m	7.7
Product weight	kg	32
Oil level	ℓ	1.2
Paint color		Silver

Accuracy

Index accuracy (sec.)		
Indexing accuracy	1 dwell	± 60
	2 dwell	± 90
	3 dwell	-
	4 dwell	-
Repeatability		60

Oscillating accuracy (sec.)	
Indexing accuracy	± 90
Repeatability	60

* For the dwell accuracy, please contact CKD.

List of index angles

Index series **PCIS 100** Cam curve/MS

Total index angle (θt) / Index number (n)		90	120	150	180	210	240	270	300	330
1 dwell	1								○	○
	2			○	○	○	○	○	○	○
	3	○	○	○	○	○	○	○	○	○
	4	○	○	○	○	○	○	○	○	○
2 dwell	6		○	○	○	○	○	○	○	○
	8	○	○	○	○	○	○	○	○	○

Cam curve/MC

Total index angle (θt) / Index number (n)		90	120	150	180	210	240	270	300	330
1 dwell	1					○	○	○	○	○
	2		○	○	○	○	○	○	○	○

Oscillating series **PCOS 100** Cam curve/MS

Total index angle (θt) / Oscillating angle (ψ)	60	90	120	180	240	300	360
45			○	○	○	○	○
30		○	○	○	○	○	○
15	○	○	○	○	○	○	○

● Dimensions with options

With worm reducer (with HO60-C/B)

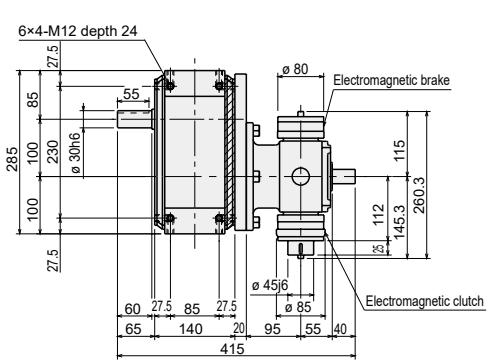

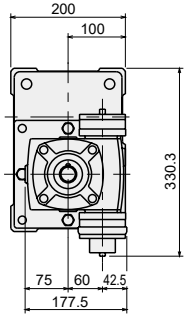

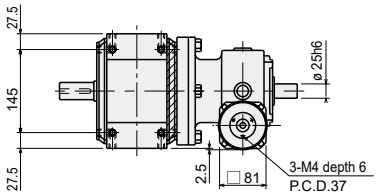

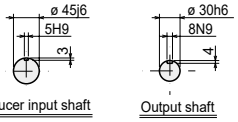

PC I S 100- □□□□□1□**-NVN06**□**YG**
PCOS 100

With worm reducer (without HO60-C/B)

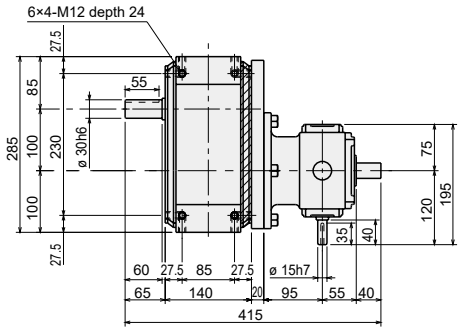

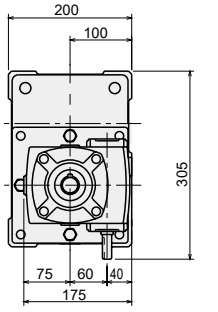

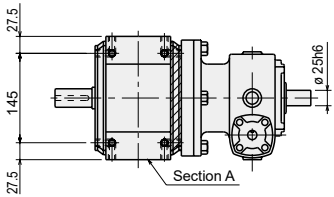

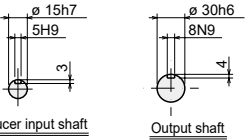

Note: Reducer may protrude from the housing end face (section A).

PC I S 100- □□□□□1□**-NVN06**□**NG**
PCOS 100

With Torque saver (TSF8)

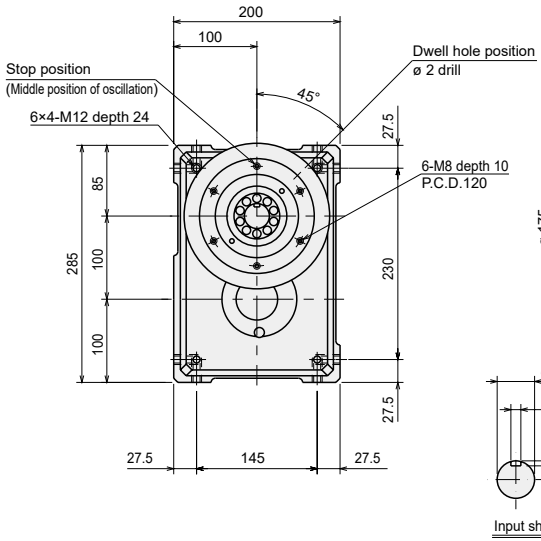

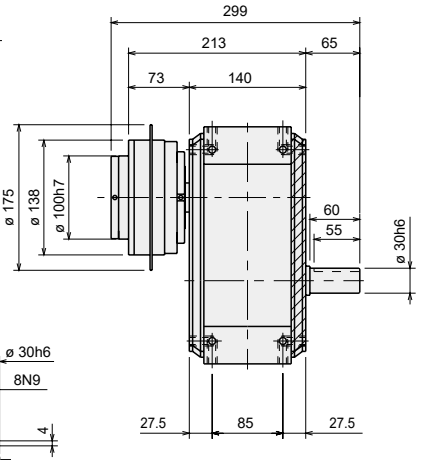

PCI S 100- ☐☐☐☐ **1** ☐ **-NNF-08** ☐
PCOS 100

Standard specifications

Dimensions

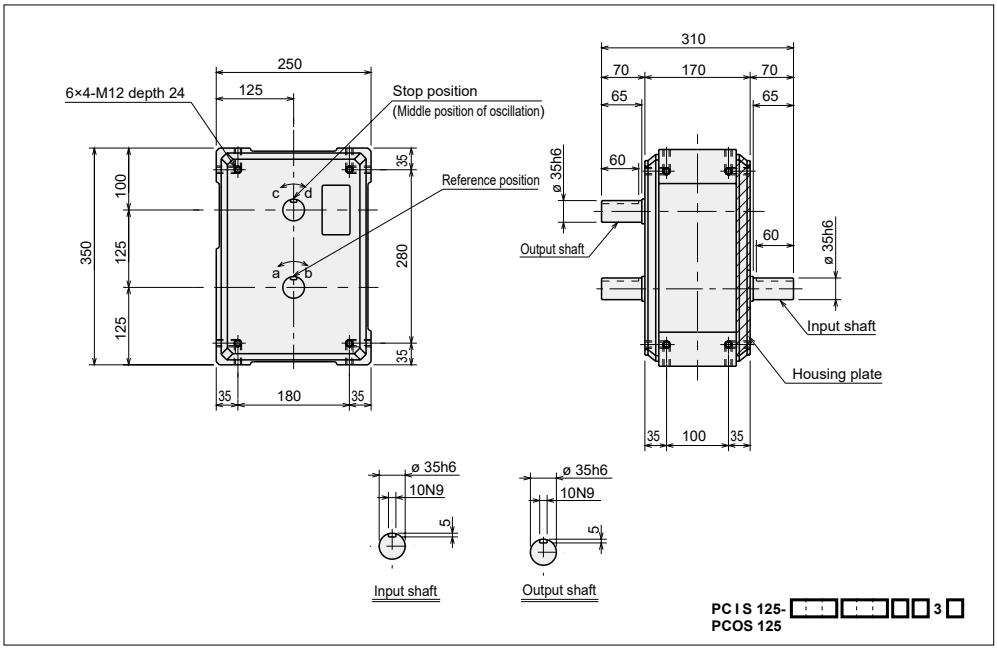

Installation position and oil supply/drain port and oil level gauge positions

• Oil fill/drain port ($Rc^{3}/_{8}$)
○ Oil level gauge (ø 30)

Installation position	1	2	3
Series	PCIS/PCOS	PCIS/PCOS	PCIS/PCOS
Dimensions	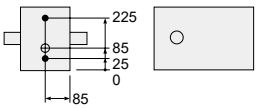	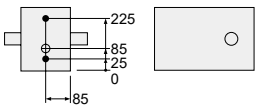	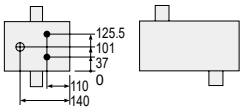

Installation position	4	5	6
Series	PCIS/PCOS	PCIS/PCOS	PCIS/PCOS
Dimensions	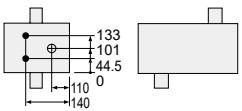	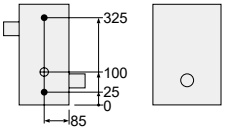	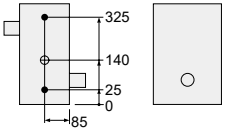

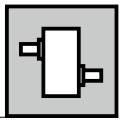

Characteristics

Descriptions	Unit	Characteristics	
		Output shaft	Input shaft
Allowable thrust force	N	5800	4000
Allowable radial force	N	5200	3200
Allowable bending moment	N·m	260	-
Moment of inertia	kg·m^2	1.86 × 10^{-2}	3.06 × 10^{-2}

Descriptions	Unit	Characteristics
Internal frictional torque (Tin)	N·m	12
Product weight	kg	62
Oil level	ℓ	2.5
Paint color		Silver

Accuracy

Index accuracy (sec.)		
Indexing accuracy	1 dwell	± 60
	2 dwell	± 90
	3 dwell	-
	4 dwell	-
Repeatability		60

Oscillating accuracy (sec.)	
Indexing accuracy	± 90
Repeatability	60

* For the dwell accuracy, please contact CKD.

List of index angles

Index series **PCIS 125** Cam curve/MS

Total index angle (θt) / Index number (n)		90	120	150	180	210	240	270	300	330
1 dwell	1								○	○
	2			○	○	○	○	○	○	○
	3	○	○	○	○	○	○	○	○	○
	4	○	○	○	○	○	○	○	○	○
2 dwell	6		○	○	○	○	○	○	○	○
	8	○	○	○	○	○	○	○	○	○

Cam curve/MC

Total index angle (θt) / Index number (n)		90	120	150	180	210	240	270	300	330
1 dwell	1					○	○	○	○	○
	2		○	○	○	○	○	○	○	○

Oscillating series **PCOS 125** Cam curve/MS

Total index angle (θt) / Oscillating angle (ψ)	60	90	120	180	240	300	360
45			○	○	○	○	○
30		○	○	○	○	○	○
15	○	○	○	○	○	○	○

● Dimensions with options

With worm reducer (with HO80-C/B)

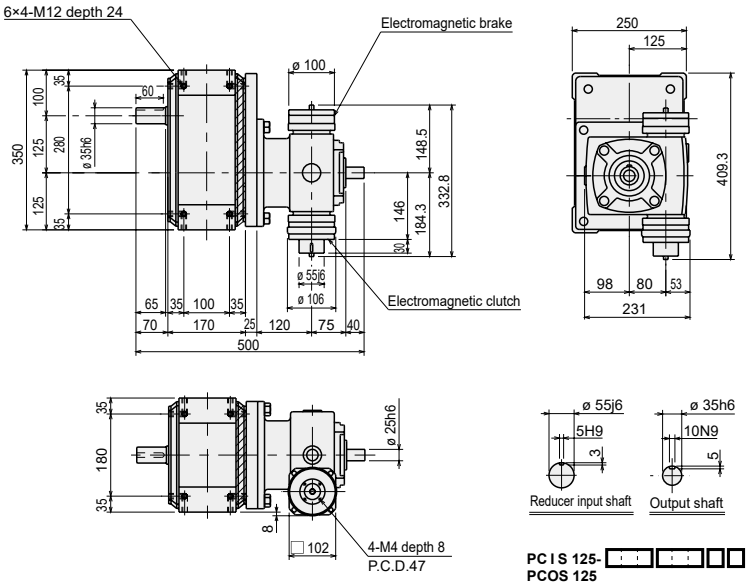

PC I S 125- □□□□□□1□**-NVN08**□**YG**
PCOS 125

With worm reducer (without HO80-C/B)

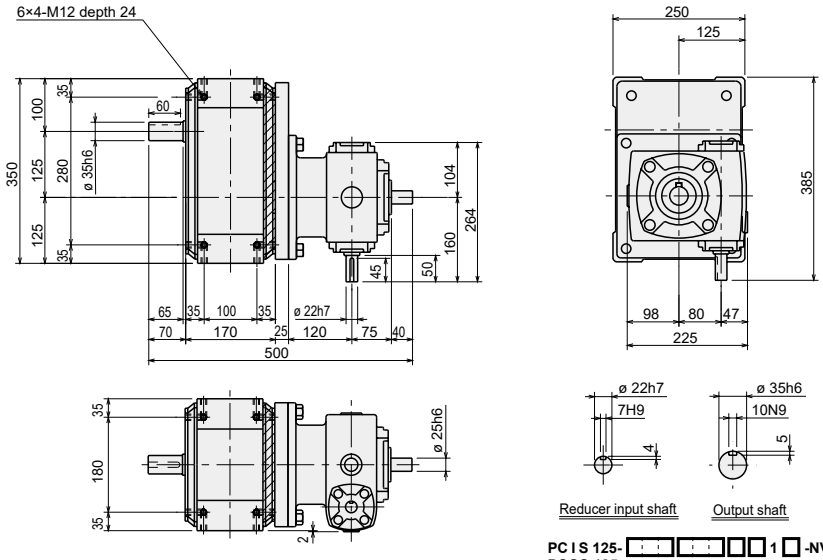

PC I S 125- □□□□□□1□**-NVN08**□**NG**
PCOS 125

With Torque saver (TSF11)

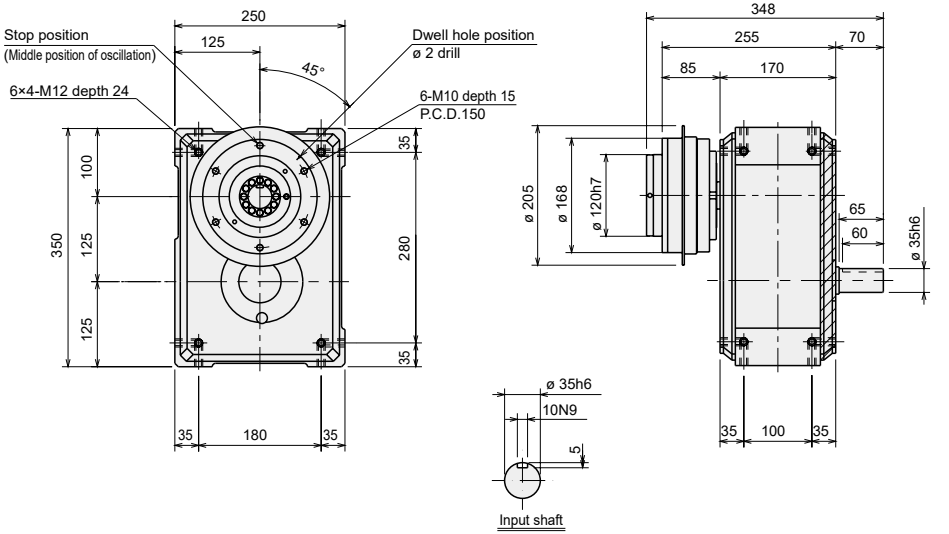

PC I S 125- ☐☐☐☐ **1** ☐ **-NNF-11** ☐
PCOS 125

Standard specifications

Dimensions

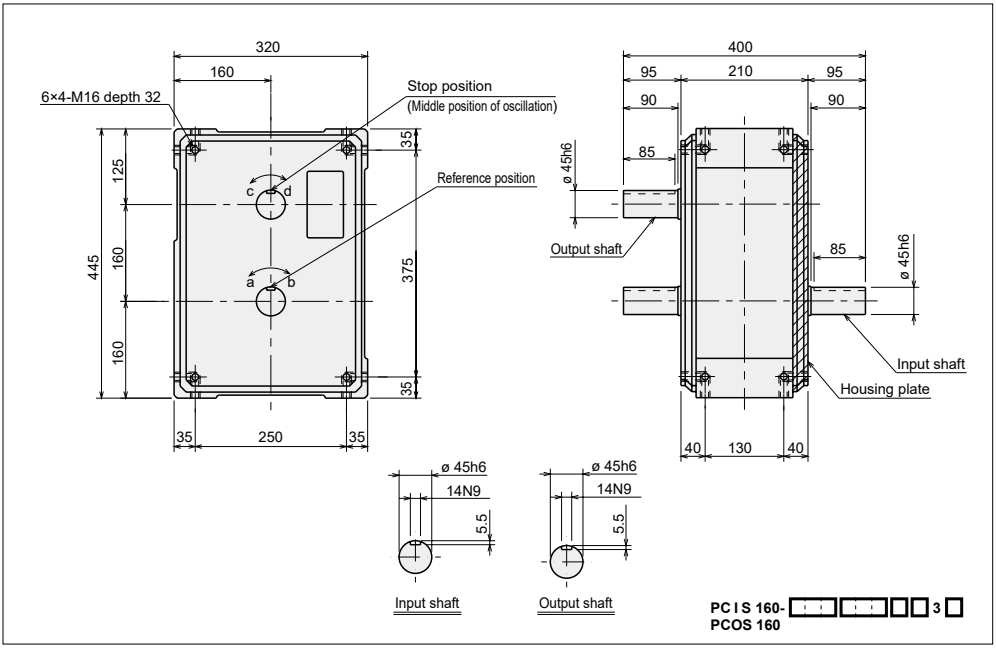

Installation position and oil supply/drain port and oil level gauge positions

- Oil fill/drain port ($Rc^{1}/_{2}$)
- ○ Oil level gauge (ø 30)

Installation position	1	2	3
Series	PCIS/PCOS	PCIS/PCOS	PCIS/PCOS
Dimensions	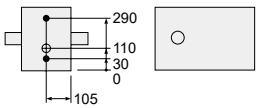	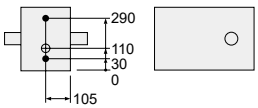	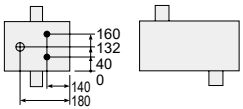

Installation position	4	5	6
Series	PCIS/PCOS	PCIS/PCOS	PCIS/PCOS
Dimensions	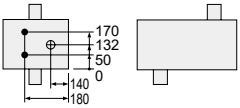	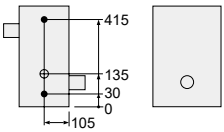	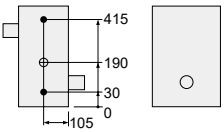

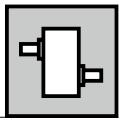

Characteristics

Descriptions	Unit	Characteristics	
		Output shaft	Input shaft
Allowable thrust force	N	8000	6200
Allowable radial force	N	6500	4000
Allowable bending moment	N·m	340	-
Moment of inertia	kg·m^2	0.084	0.11

Descriptions	Unit	Characteristics
Internal frictional torque (Tin)	N·m	20
Product weight	kg	130
Oil level	ℓ	4
Paint color		Silver

Accuracy

Index accuracy (sec.)		
Indexing accuracy	1 dwell	± 60
	2 dwell	± 90
	3 dwell	-
	4 dwell	-
Repeatability		60

Oscillating accuracy (sec.)	
Indexing accuracy	± 90
Repeatability	60

* For the dwell accuracy, please contact CKD.

List of index angles

Index series **PCIS 160** Cam curve/MS

Total index angle (θt) / Index number (n)		90	120	150	180	210	240	270	300	330
1 dwell	1								○	○
	2			○	○	○	○	○	○	○
	3	○	○	○	○	○	○	○	○	○
	4	○	○	○	○	○	○	○	○	○
2 dwell	6		○	○	○	○	○	○	○	○
	8	○	○	○	○	○	○	○	○	○

Cam curve/MC

Total index angle (θt) / Index number (n)		90	120	150	180	210	240	270	300	330
1 dwell	1					○	○	○	○	○
	2		○	○	○	○	○	○	○	○

Oscillating series **PCOS 160** Cam curve/MS

Total index angle (θt) / Oscillating angle (ψ)	60	90	120	180	240	300	360
45			○	○	○	○	○
30		○	○	○	○	○	○
15	○	○	○	○	○	○	○

● Dimensions with options

With worm reducer (with HO100-C/B)

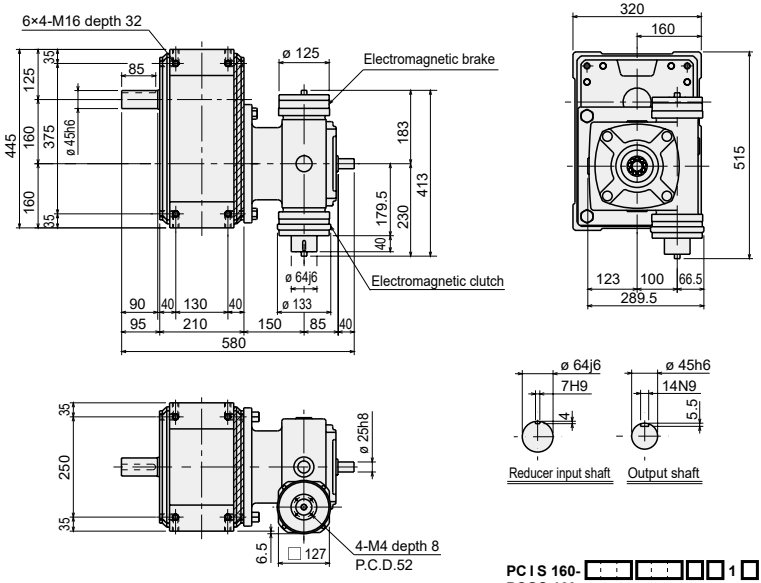

PC I S 160- □□ □□ □□ **1** □ **-NVN10** □ **YG**
PCOS 160

With worm reducer (without HO100-C/B)

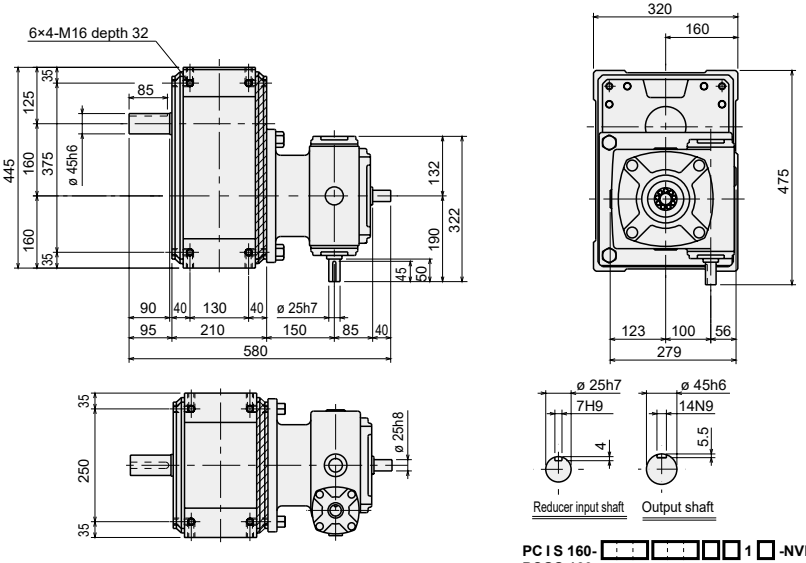

PC I S 160- □□ □□ □□ **1** □ **-NVN010** □ **NG**
PCOS 160

With Torque saver (TSF14)

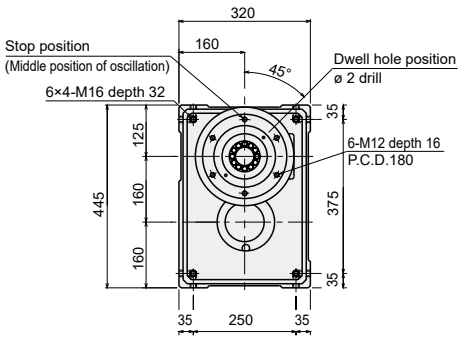

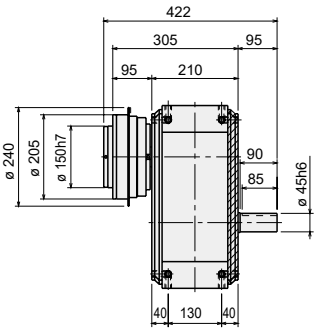

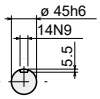

Input shaft

PC I S 160-□□□□□□1□-NNF-14□
PCOS 160

● Standard specifications

Dimensions

CAD

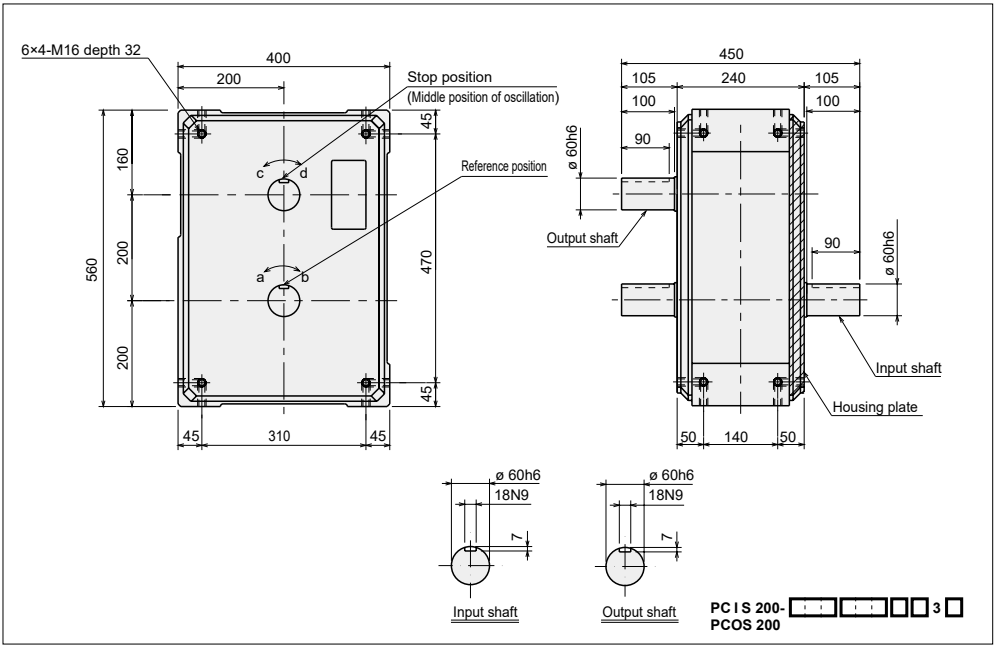

Installation position and oil supply/drain port and oil level gauge positions

• Oil fill/drain port (Rc1/2)
○ Oil level gauge (ø 30)

Installation position	1	2	3
Series	**PCIS/PCOS**	**PCIS/PCOS**	**PCIS/PCOS**
Dimensions	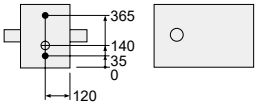	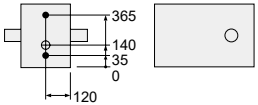	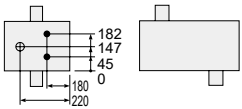

Installation position	4	5	6
Series	**PCIS/PCOS**	**PCIS/PCOS**	**PCIS/PCOS**
Dimensions	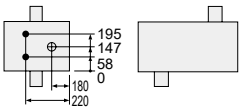	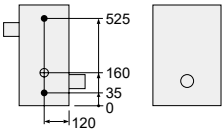	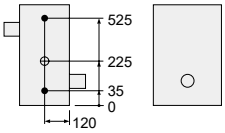

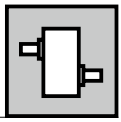

Characteristics

Descriptions	Unit	Characteristics	
		Output shaft	Input shaft
Allowable thrust force	N	14000	10000
Allowable radial force	N	11000	7500
Allowable bending moment	N·m	1200	-
Moment of inertia	kg·m^2	0.19	0.32

Descriptions	Unit	Characteristics
Internal frictional torque (Tin)	N·m	31
Product weight	kg	240
Oil level	ℓ	7
Paint color		Silver

Accuracy

Index accuracy (sec.)		
Indexing accuracy	1 dwell	± 60
	2 dwell	± 90
	3 dwell	-
	4 dwell	-
Repeatability		60

Oscillating accuracy (sec.)	
Indexing accuracy	± 90
Repeatability	60

* For the dwell accuracy, please contact CKD.

List of index angles

Index series **PCIS 200** Cam curve/MS

Total index angle (θt) / Index number (n)		90	120	150	180	210	240	270	300	330
1 dwell	1								○	○
	2			○	○	○	○	○	○	○
	3	○	○	○	○	○	○	○	○	○
	4	○	○	○	○	○	○	○	○	○
2 dwell	6		○	○	○	○	○	○	○	○
	8	○	○	○	○	○	○	○	○	○

Cam curve/MC

Total index angle (θt) / Index number (n)		90	120	150	180	210	240	270	300	330
1 dwell	1					○	○	○	○	○
	2		○	○	○	○	○	○	○	○

Oscillating series **PCOS 200** Cam curve/MS

Total index angle (θt) / Oscillating angle (ψ)	60	90	120	180	240	300	360
45			○	○	○	○	○
30		○	○	○	○	○	○
15	○	○	○	○	○	○	○

● Dimensions with options

With worm reducer (with HO100-C/B)

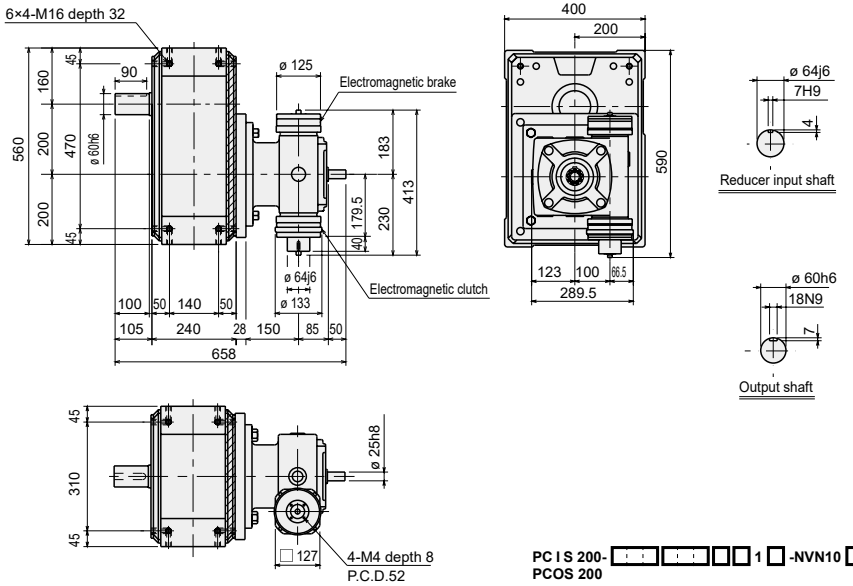

PC I S 200- □□□□□1□**-NVN10**□**YG**
PCOS 200

With worm reducer (without HO100-C/B)

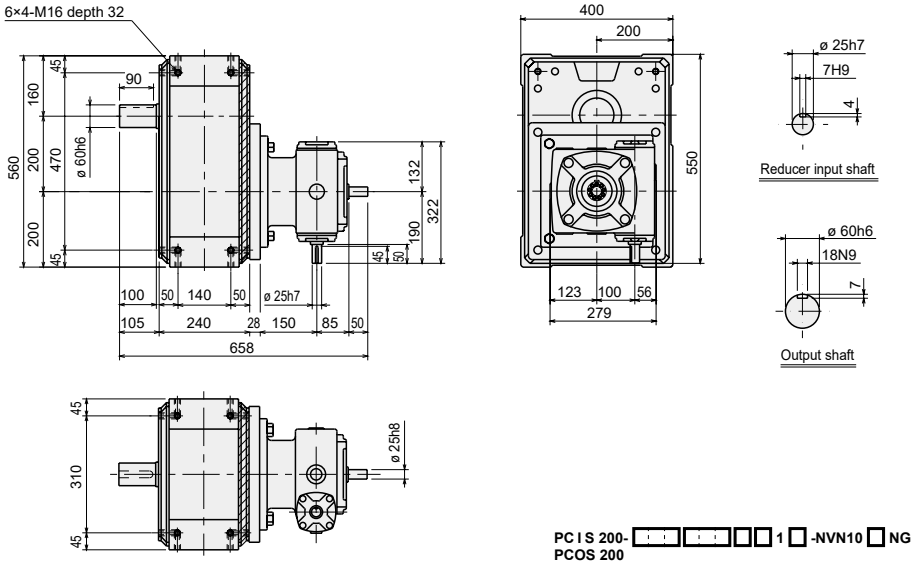

PC I S 200- □□□□□1□**-NVN10**□**NG**
PCOS 200

With worm reducer (with HO135-C/B)

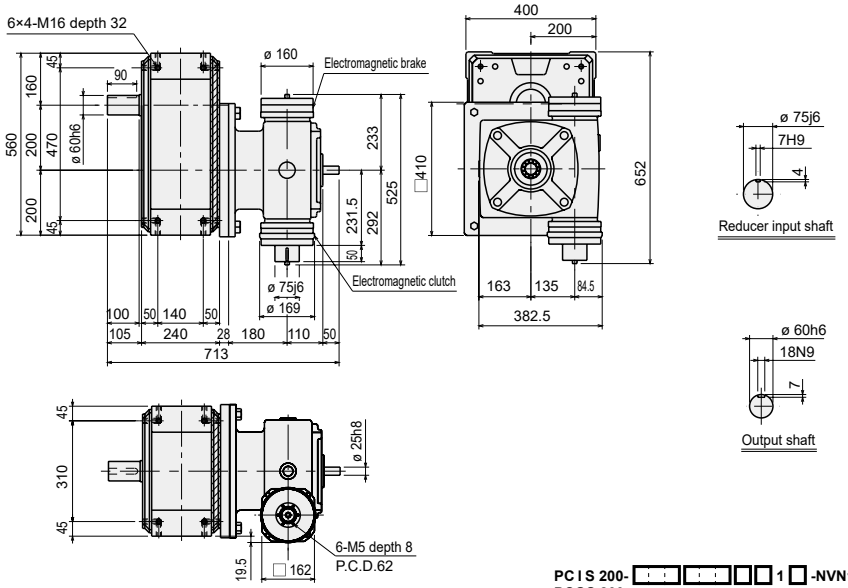

PC I S 200- □□□□□□**1** □ **-NVN13** □ **YG**
PCOS 200

With worm reducer (without HO135-C/B)

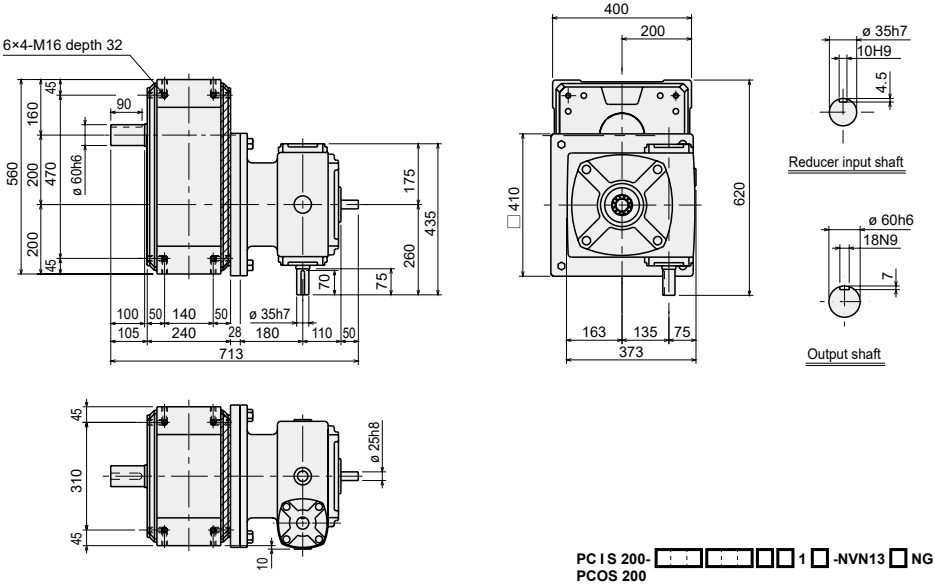

PC I S 200- □□□□□□**1** □ **-NVN13** □ **NG**
PCOS 200

● Dimensions with options

With Torque saver (TSF18)

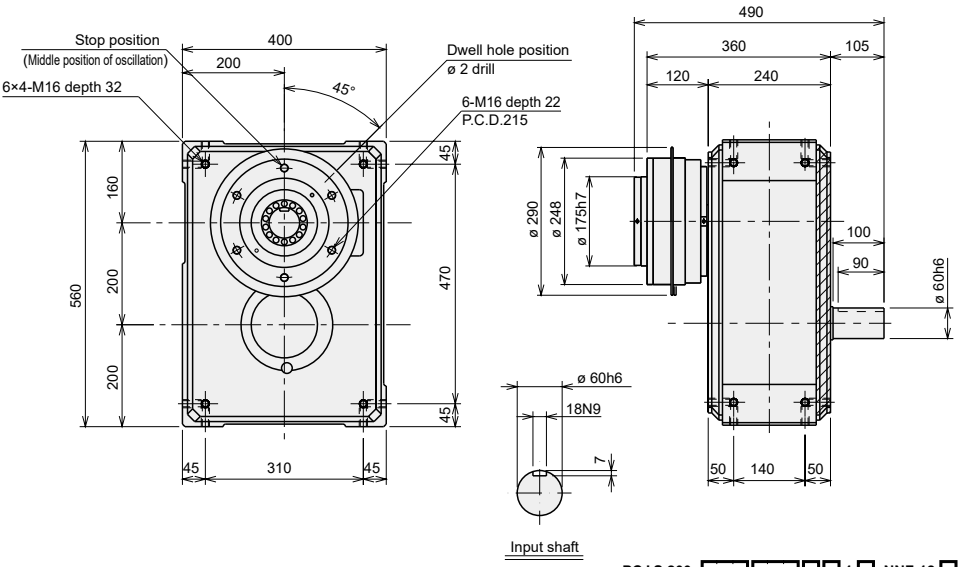

PC I S 200-□□□□□1□-NNF-18□
PCOS 200

● MEMO

● Standard specifications

Dimensions

CAD

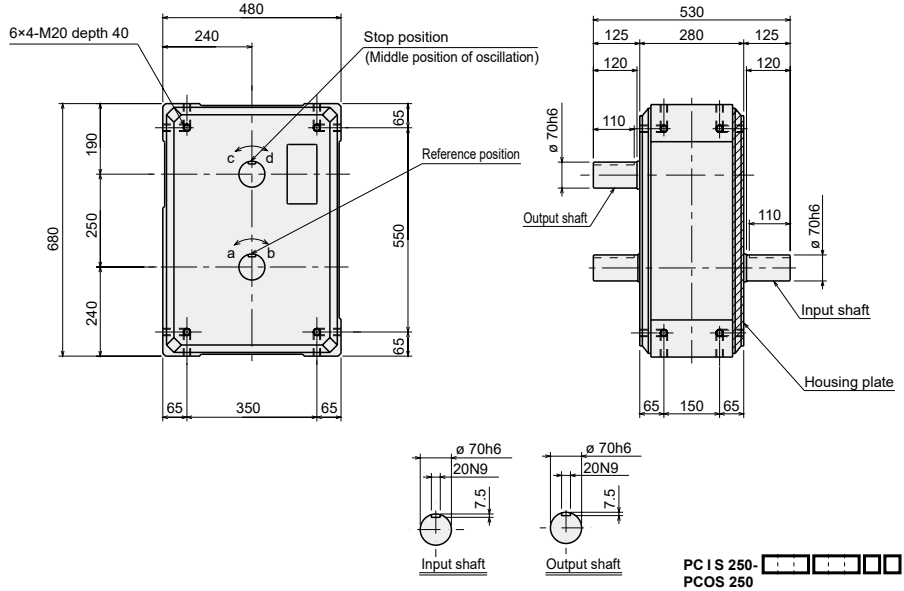

Installation position and oil supply/drain port and oil level gauge positions

• Oil fill/drain port (Rc 1/2)
○ Oil level gauge (ø 30)

Installation position	1	2	3
Series	PCIS/PCOS	PCIS/PCOS	PCIS/PCOS
Dimensions	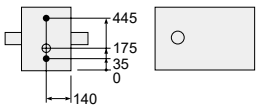	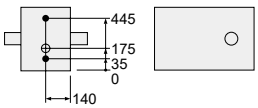	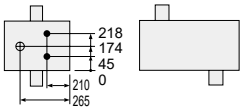

Installation position	4	5	6
Series	PCIS/PCOS	PCIS/PCOS	PCIS/PCOS
Dimensions	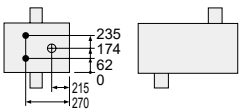	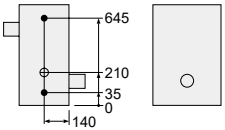	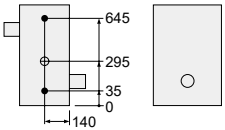

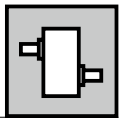

Characteristics

Descriptions	Unit	Characteristics	
		Output shaft	Input shaft
Allowable thrust force	N	18000	15000
Allowable radial force	N	15000	12000
Allowable bending moment	N·m	2100	-
Moment of inertia	kg·m^2	0.51	0.73

Descriptions	Unit	Characteristics
Internal frictional torque (Tin)	N·m	48
Product weight	kg	400
Oil level	ℓ	13
Paint color		Silver

Accuracy

Index accuracy (sec.)		
Indexing accuracy	1 dwell	± 60
	2 dwell	± 90
	3 dwell	-
	4 dwell	-
Repeatability		60

Oscillating accuracy (sec.)	
Indexing accuracy	± 90
Repeatability	60

* For the dwell accuracy, please contact CKD.

List of index angles

Index series **PCIS 250** Cam curve/MS

Total index angle (θt) / Index number (n)		90	120	150	180	210	240	270	300	330
1 dwell	1								○	○
	2			○	○	○	○	○	○	○
	3	○	○	○	○	○	○	○	○	○
	4	○	○	○	○	○	○	○	○	○
2 dwell	6		○	○	○	○	○	○	○	○
	8	○	○	○	○	○	○	○	○	○

Cam curve/MC

Total index angle (θt) / Index number (n)		90	120	150	180	210	240	270	300	330
1 dwell	1					○	○	○	○	○
	2		○	○	○	○	○	○	○	○

Oscillating series **PCOS 250** Cam curve/MS

Total index angle (θt) / Oscillating angle (ψ)	60	90	120	180	240	300	360
45			○	○	○	○	○
30		○	○	○	○	○	○
15	○	○	○	○	○	○	○

● Dimensions with options

With worm reducer (with HO135-C/B)

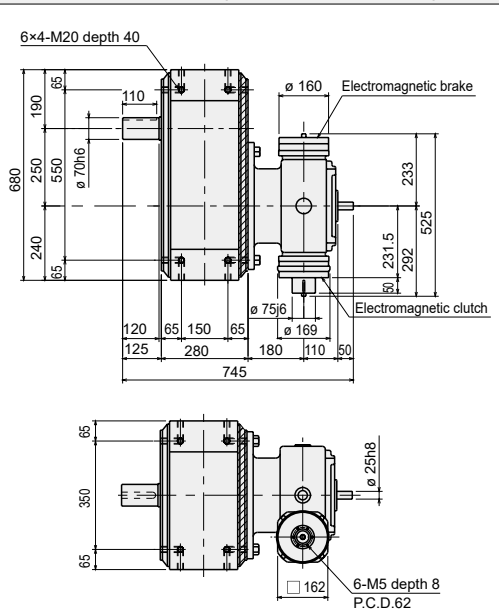

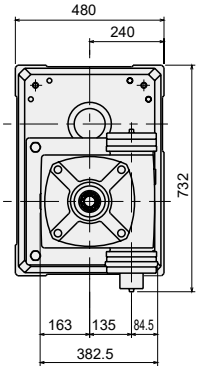

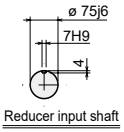

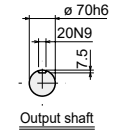

PC I S 250- □□□□□□1□**-NVN13**□**YG**
PCOS 250

With worm reducer (without HO135-C/B)

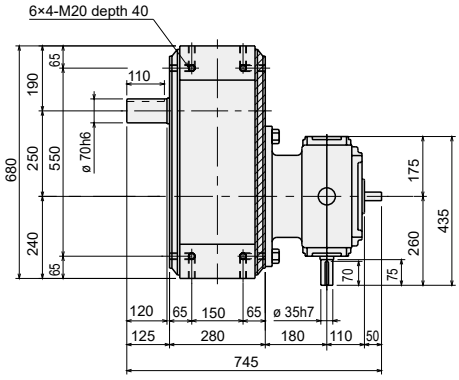

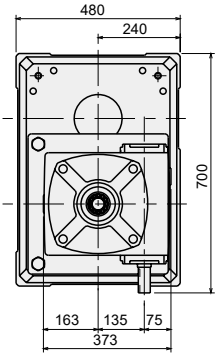

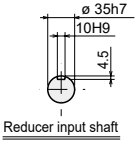

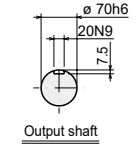

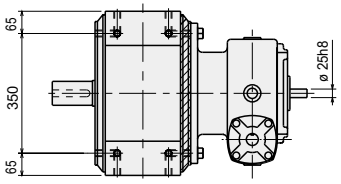

PC I S 250- □□□□□□1□**-NVN13**□**NG**
PCOS 250

With Torque saver (TSF18)

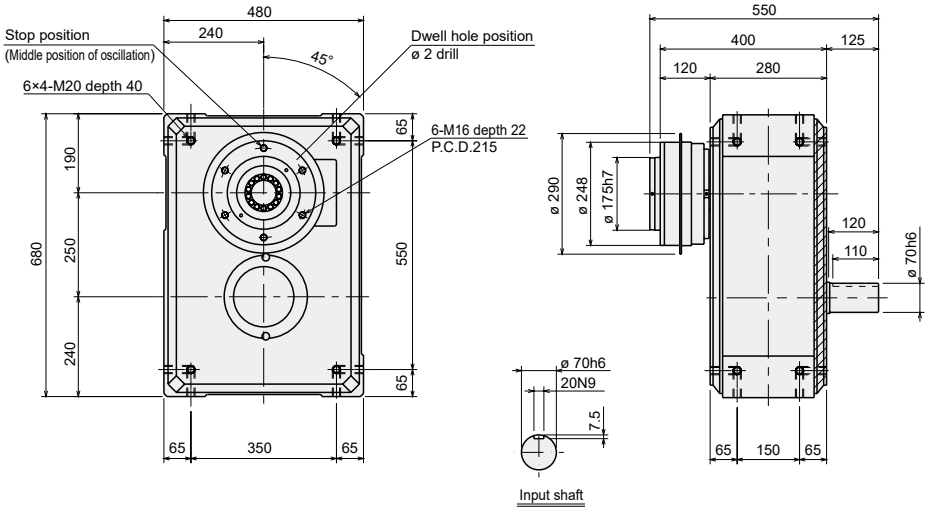

PC I S 250- ☐☐☐☐ **1** ☐ **-NNF-18** ☐
PCOS 250

Output torque table

● How to read a torque table

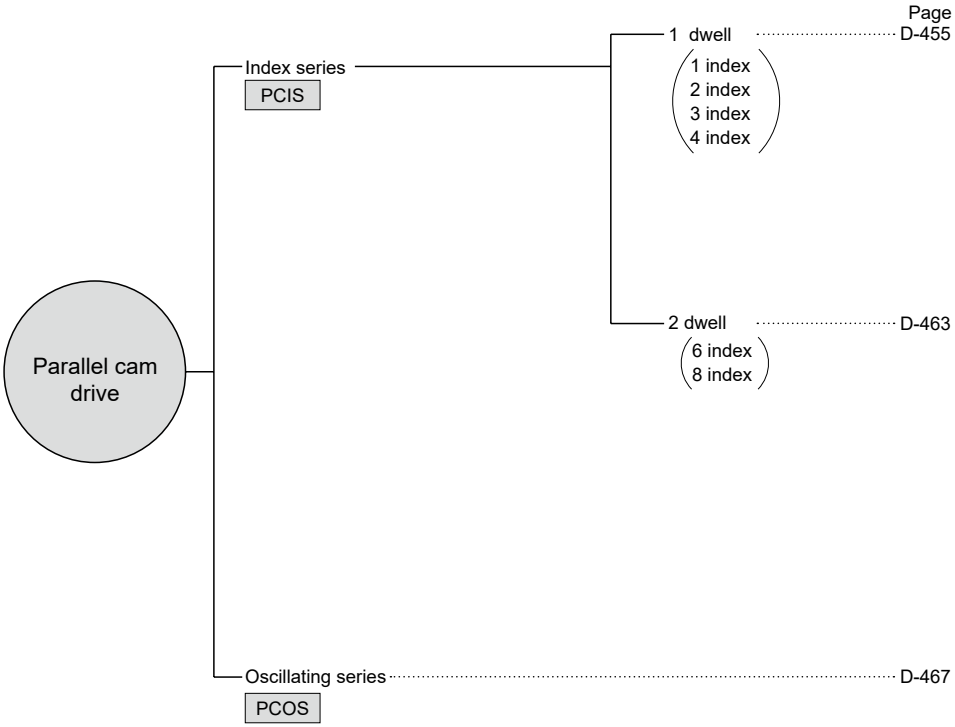

Cautions

1. The output torque data is summarized as in the table on the left.
2. The index angle indicates the total index angle of 1 rotation of the input shaft.
3. The data is based on standard service life of 10,000 hours.

Index series

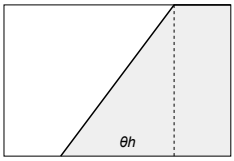

1 dwell

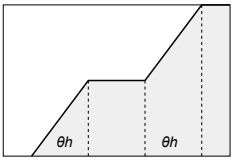

2 dwell

1 dwell ..... 1 to 4 index
2 dwell ..... 6 or 8 index

Oscillators

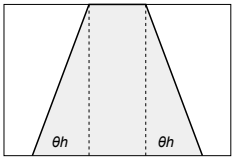

$\theta t = \theta h \times z$
θt : Total index angle
θh : Index angle
z : Dwell No.

How to read the output torque table

Index number:	Total index angle (deg)	Cam curve	Size	Static rated output torque (N·m)	Dynamic rated output torque (N·m) Input shaft rotational speed (rpm) 30	60	90	120	150	200	300	400	500
1	330	MC	040	23.2	10.4	9.3	7.9	7.0	6.4	5.7	4.8	4.2	3.6
			050	52.9	19.3	17.2	14.7	13.1	11.9	10.6	8.7	7.4	6.2
			063	72.1	48.6	43.3	36.9	32.9	30.1	26.6	22.1	18.8	16.0
			080	146	90.9	81.0	69.0	61.4	56.0	49.4	40.4	33.5	27.4
			100	376	170	151	128	114	104	91	72	56	
			125	808	334	297	253	224	203	176	136	100	
			160	1490	707	628	531	467	418	352	241		
			200	2630	1250	1110	930	820	730	610	390		
			250	5860	1850	1640	1370	1180	1030	810			
			040	3.25	2.79	2.46	2.07	1.81					
			050	15.5	7.03	6.20	5.20						
			063	25.5	13.2	11.6							

- Index number n
- Total index angle θt (°)
- Cam curve: MS, MC
- Size: C represents shaft interval
- Static rated output torque (N·m)
- Dynamic rated output torque Tr (N·m)
- Input shaft rotational speed$N$ (rpm)

Output torque table

● PCIS (1 dwell)

Index number	Total index angle (deg)	Cam curve	Size	Static rated output torque (N·m)	Rated dynamic output torque (N·m) Input shaft rotational speed (rpm) 30	60	90	120	150	200	300	400	500
1	210	MC	040	4.11	3.62	3.21	2.72	2.41	2.17	1.87	1.40	0.96	
			050	19.7	9.13	8.09	6.85	6.04	5.43	4.62	3.30		
			063	32.3	17.1	15.2	12.8	11.3	10.1	8.6	6.0		
			080	62.2	43.6	38.6	32.6	28.7	25.6	21.6	14.6		
			100	124	79.9	70.5	59.1	51.4	45.1	36.1			
			125	319	150	132	110	94	82	62			
			160	702	334	294	246	212	185	145			
			200	1200	525	461	382	325	277	202			
			250	2230	1100	960	790	670	560	380			
	240	MC	040	4.11	3.66	3.25	2.76	2.45	2.22	1.93	1.49	1.12	
			050	19.7	9.25	8.20	6.96	6.15	5.56	4.79	3.59	2.51	
			063	32.3	17.3	15.4	13.0	11.5	10.4	8.9	6.6	4.4	
			080	62.2	44.1	39.1	33.1	29.2	26.3	22.5	16.3		
			100	124	80.9	71.6	60.3	52.7	46.8	38.7	24.0		
			125	319	152	134	112	98	86	68			
			160	702	338	299	251	219	193	157			
			200	1200	532	469	391	337	293	227			
			250	2230	1110	980	810	690	590	440			
	270	MC	040	14.7	6.69	5.94	5.06	4.51	4.11	3.63	2.97	2.47	2.03
			050	32.6	15.1	13.4	11.4	10.2	9.2	8.1	6.5	5.2	4.0
			063	57.7	24.6	21.8	18.5	16.5	14.9	13.1	10.3	8.0	
			080	117	62.9	55.8	47.5	42.1	38.2	33.2	25.9	19.7	
			100	260	116	103	87	77	69	59	43		
			125	497	238	210	178	157	140	118	81		
			160	1220	517	457	385	337	299	247	153		
			200	1610	804	709	594	515	451	358			
			250	5060	1590	1400	1160	990	850	620			
	300	MS	040	4.11	3.76	3.38	2.88	2.56	2.34	2.07	1.70	1.42	1.18
			050	19.7	9.49	8.53	7.26	6.46	5.89	5.18	4.21	3.45	2.75
			063	32.3	17.8	16.0	13.6	12.1	11.0	9.7	7.8	6.3	5.0
			080	62.2	45.3	40.7	34.6	30.8	28.0	24.6	19.7	15.8	12.1
			100	124	83.1	74.6	63.3	56.1	50.7	43.9	33.5	24.3	
			125	319	156	140	118	105	94	81	59		
			160	702	347	311	264	234	211	182	136		
			200	1200	547	490	414	365	327	277	193		
			250	2230	1140	1020	860	760	680	570			
		MC	040	14.7	6.75	6.00	5.11	4.56	4.16	3.68	3.04	2.57	2.16
			050	32.6	15.3	13.6	11.6	10.3	9.4	8.3	6.7	5.5	4.4
			063	57.7	24.8	22.0	18.7	16.7	15.2	13.3	10.7	8.5	6.5
			080	117	63.5	56.4	48.0	42.6	38.7	33.9	27.0	21.3	
			100	260	117	104	88	78	70	61	46	32	
			125	497	240	213	180	159	143	122	89		
			160	1220	522	462	391	343	307	257	173		
			200	1610	812	717	603	526	465	379	222		
			250	5060	1610	1420	1180	1020	880	680			
	330	MS	040	4.11	3.76	3.41	2.90	2.59	2.36	2.09	1.73	1.47	1.24
			050	19.7	9.49	8.60	7.33	6.53	5.95	5.26	4.31	3.59	2.96
			063	32.3	17.8	16.1	13.7	12.2	11.1	9.8	8.0	6.6	5.4
			080	62.2	45.3	41.1	35.0	31.1	28.3	25.0	20.2	16.6	13.2
			100	124	83.2	75.3	64.0	56.8	51.5	44.8	35.0	26.6	
			125	319	156	141	120	106	96	83	62	44	
			160	702	347	314	267	237	214	186	142	104	
			200	1200	547	495	419	370	333	285	208		
			250	2230	1140	1030	870	770	690	580			

● PCIS (1 dwell)

Index number	Total index angle (deg)	Cam curve	Size	Static rated output torque (N·m)	Rated dynamic output torque (N·m) Input shaft rotational speed (rpm) 30	60	90	120	150	200	300	400	500
1	330	MC	040	23.2	10.4	9.3	7.9	7.0	6.4	5.7	4.8	4.2	3.6
			050	52.9	19.3	17.2	14.7	13.1	11.9	10.6	8.7	7.4	6.2
			063	72.1	48.6	43.3	36.9	32.9	30.1	26.6	22.1	18.8	16.0
			080	146	90.9	81.0	69.0	61.4	56.0	49.4	40.4	33.5	27.4
			100	376	170	151	128	114	104	91	72	56	
			125	808	334	297	253	224	203	176	136	100	
			160	1490	707	628	531	467	418	352	241		
			200	2630	1250	1110	930	820	730	610	390		
			250	5860	1850	1640	1370	1180	1030	810			
2	120	MC	040	3.25	2.79	2.46	2.07	1.81	1.61	1.33	0.83		
			050	15.5	7.03	6.20	5.20	4.52	3.98	3.19			
			063	25.5	13.2	11.6	9.7	8.4	7.4	5.8			
			080	49.1	33.5	29.5	24.7	21.3	18.5	14.4			
			100	97.9	61.4	53.7	44.2	37.1	31.0	21.1			
			125	252	115	100	81	67	53	31			
			160	555	256	223	182	151	123	77			
			200	944	403	348	279	223	170				
			250	1760	841	721	568	439	314				
	150	MS	040	3.25	2.89	2.57	2.18	1.93	1.75	1.51	1.15	0.84	
			050	15.5	7.30	6.47	5.48	4.84	4.37	3.74	2.75	1.83	
			063	25.5	13.7	12.1	10.3	9.1	8.2	7.0	5.0		
			080	49.1	34.8	30.9	26.1	23.0	20.6	17.5	12.3		
			100	97.9	63.9	56.4	47.4	41.4	36.5	29.8	17.3		
			125	252	120	106	88	76	66	52			
			160	555	267	235	197	171	150	119			
			200	944	420	369	307	263	226	170			
			250	1760	877	768	635	537	454	322			
		MC	040	11.8	5.18	4.59	3.90	3.46	3.14	2.73	2.12	1.59	
			050	26.1	11.7	10.4	8.8	7.8	7.0	6.0	4.4	3.0	
			063	46.1	19.0	16.8	14.2	12.5	11.3	9.6	6.7		
			080	93.1	48.6	43.0	36.4	32.0	28.6	24.1	16.4		
			100	208	89.6	79.1	66.3	57.6	50.7	40.7			
			125	397	183	162	135	116	101	78			
			160	973	399	350	290	246	209	152			
			200	1290	621	541	443	368	301	193			
			250	4050	1230	1060	850	670	510				
	180	MS	040	11.8	5.35	4.75	4.05	3.61	3.29	2.90	2.38	1.98	1.63
			050	26.1	12.1	10.7	9.1	8.1	7.4	6.5	5.2	4.2	3.2
			063	46.1	19.7	17.5	14.8	13.2	12.0	10.4	8.2	6.4	
			080	93.1	50.3	44.6	37.9	33.7	30.5	26.6	20.7	15.6	
			100	208	92.8	82.2	69.6	61.4	55.3	47.2	34.1		
			125	397	190	168	142	125	112	94	64		
			160	973	413	365	308	269	239	196	120		
			200	1290	643	567	475	411	360	285			
			250	4050	1270	1120	930	790	670	490			
		MC	040	18.7	8.06	7.17	6.10	5.43	4.95	4.37	3.57	2.96	2.41
			050	42.7	15.0	13.3	11.3	10.1	9.1	8.0	6.3	4.9	
			063	58.2	37.8	33.6	28.5	25.4	23.0	20.2	16.1	12.7	
			080	118	70.7	62.7	53.3	47.2	42.7	37.0	28.3	20.7	
			100	303	132	117	99	87	78	66	46		
			125	652	259	229	193	169	151	125	80		
			160	1200	549	483	403	346	299	229			
			200	2120	970	851	706	601	512	374			
			250	4720	1440	1250	1020	830	670				

Output torque table

● PCIS (1 dwell)

Index number	Total index angle (deg)	Cam curve	Size	Static rated output torque (N·m)	Rated dynamic output torque (N·m) Input shaft rotational speed (rpm) 30	60	90	120	150	200	300	400	500
2	210	MS	040	11.8	5.37	4.82	4.11	3.67	3.35	2.97	2.46	2.09	1.78
			050	26.1	12.1	10.9	9.3	8.3	7.5	6.6	5.4	4.5	3.7
			063	46.1	19.7	17.7	15.1	13.4	12.2	10.7	8.7	7.0	5.5
			080	93.1	50.5	45.3	38.5	34.3	31.2	27.3	21.9	17.4	13.3
			100	208	93.1	83.5	70.8	62.7	56.7	49.1	37.4	26.9	
			125	397	191	171	145	128	115	99	73	48	
			160	973	415	371	314	276	247	209	143		
			200	1290	646	577	486	424	376	309	188		
			250	4050	1280	1140	950	820	720	560			
		MC	040	18.7	8.18	7.27	6.19	5.52	5.04	4.46	3.69	3.13	2.65
			050	42.7	15.2	13.5	11.5	10.2	9.3	8.2	6.6	5.4	4.2
			063	58.2	38.3	34.0	29.0	25.8	23.5	20.7	16.8	13.8	11.1
			080	118	71.7	63.7	54.1	48.1	43.7	38.2	30.2	23.6	
			100	303	134	118	100	89	80	69	51	35	
			125	652	263	233	197	174	156	132	93		
			160	1200	557	491	413	359	316	254			
			200	2120	985	868	725	626	545	426			
			250	4720	1460	1280	1050	890	740	510			
	240	MS	040	18.7	8.23	7.48	6.38	5.70	5.21	4.64	3.90	3.39	2.99
			050	42.7	15.3	13.9	11.9	10.6	9.7	8.6	7.1	6.1	5.2
			063	58.2	38.6	35.1	29.9	26.7	24.4	21.6	18.0	15.4	13.3
			080	118	72.2	65.6	55.9	49.8	45.4	40.2	33.0	27.7	23.1
			100	303	135	122	104	92	84	74	59	47	36
			125	652	265	241	204	181	165	143	112	85	
			160	1200	561	508	430	379	341	290	206		
			200	2120	993	898	759	667	596	500	336		
			250	4720	1470	1330	1120	970	850	680			
		MC	040	22.4	9.67	8.64	7.37	6.57	6.01	5.34	4.46	3.85	3.35
			050	51.1	18.0	16.0	13.7	12.2	11.1	9.8	8.1	6.8	5.6
			063	69.9	45.4	40.6	34.6	30.8	28.1	24.9	20.6	17.4	14.6
			080	141	84.8	75.7	64.5	57.4	52.3	46.0	37.3	30.6	24.4
			100	363	158	141	120	106	96	84	65	50	
			125	782	311	277	235	208	188	162	122	86	
			160	1440	658	586	493	431	383	316	196		
			200	2540	1170	1030	870	750	660	530			
			250	5660	1730	1530	1260	1070	910	650			
	270	MS	040	18.7	8.23	7.57	6.45	5.76	5.27	4.70	3.96	3.47	3.09
			050	42.7	15.3	14.1	12.0	10.7	9.8	8.7	7.3	6.3	5.4
			063	58.2	38.6	35.4	30.2	27.0	24.7	21.9	18.4	15.9	13.9
			080	118	72.2	66.3	56.5	50.4	46.0	40.8	33.8	28.8	24.6
			100	303	135	123	105	94	85	75	61	50	40
			125	652	265	243	207	184	167	147	117	93	70
			160	1200	561	514	436	386	348	299	223	152	
			200	2120	993	909	770	679	610	520	372		
			250	4720	1480	1350	1130	990	880	720	440		
		MC	040	22.4	9.67	8.74	7.45	6.65	6.08	5.41	4.54	3.95	3.48
			050	51.1	18.0	16.2	13.8	12.3	11.3	10.0	8.3	7.0	6.0
			063	69.9	45.4	41.0	35.0	31.2	28.5	25.3	21.0	18.0	15.5
			080	141	84.8	76.6	65.2	58.1	53.0	46.8	38.4	32.2	26.6
			100	363	158	142	121	108	98	86	68	54	40
			125	782	311	281	238	211	192	167	129	97	
			160	1440	658	592	500	440	393	331	224		
			200	2540	1170	1050	880	770	680	560	340		
			250	5660	1730	1550	1290	1110	960	730			

● PCIS (1 dwell)

Index number	Total index angle (deg)	Cam curve	Size	Static rated output torque (N·m)	Rated dynamic output torque (N·m) Input shaft rotational speed (rpm) 30	60	90	120	150	200	300	400	500
2	300	MS	040	22.4	9.67	8.97	7.65	6.84	6.26	5.58	4.72	4.16	3.74
			050	51.1	18.0	16.7	14.2	12.7	11.6	10.3	8.7	7.6	6.7
			063	69.9	45.4	42.1	35.9	32.1	29.4	26.1	22.0	19.2	17.0
			080	141	84.8	78.6	67.1	59.8	54.7	48.6	40.6	35.1	30.6
			100	363	158	146	125	111	101	90	74	62	52
			125	782	311	288	246	219	199	176	143	117	94
			160	1440	659	610	518	458	415	359	274	198	
			200	2540	1170	1080	910	810	730	620	450	290	
			250	5660	1740	1600	1350	1180	1050	870	540		
		MC	040	22.4	9.67	8.82	7.52	6.72	6.15	5.47	4.61	4.03	3.59
			050	51.1	18.0	16.4	14.0	12.5	11.4	10.1	8.4	7.3	6.3
			063	69.9	45.4	41.4	35.3	31.5	28.8	25.6	21.4	18.5	16.1
			080	141	84.8	77.3	65.9	58.7	53.6	47.5	39.3	33.3	28.3
			100	363	158	144	122	109	99	87	70	57	45
			125	782	311	283	241	214	195	170	135	106	
			160	1440	659	599	507	447	402	342	245		
			200	2540	1170	1060	890	780	700	590	390		
			250	5660	1740	1570	1310	1140	1000	790			
	330	MS	040	22.4	9.67	9.05	7.72	6.90	6.32	5.63	4.77	4.22	3.80
			050	51.1	18.0	16.8	14.3	12.8	11.7	10.4	8.8	7.7	6.8
			063	69.9	45.4	42.5	36.3	32.4	29.6	26.4	22.3	19.5	17.4
			080	141	84.8	79.3	67.7	60.4	55.2	49.1	41.2	35.8	31.5
			100	363	158	148	126	112	102	91	75	64	54
			125	782	311	291	248	221	201	178	146	122	101
			160	1440	659	615	523	464	421	367	286	217	
			200	2540	1170	1090	920	820	740	640	480	340	
			250	5660	1740	1620	1370	1200	1070	900	610		
		MC	040	22.4	9.67	8.90	7.59	6.78	6.20	5.53	4.67	4.10	3.67
			050	51.1	18.0	16.5	14.1	12.6	11.5	10.2	8.6	7.4	6.5
			063	69.9	45.4	41.8	35.6	31.8	29.1	25.9	21.7	18.9	16.6
			080	141	84.8	78.0	66.5	59.3	54.2	48.1	40.0	34.3	29.5
			100	363	158	145	124	110	100	88	72	60	49
			125	782	311	286	243	216	197	173	139	112	87
			160	1440	659	604	512	453	409	351	261	177	
			200	2540	1170	1070	900	800	710	610	420		
			250	5660	1740	1590	1330	1160	1030	830	470		
3	90	MS	040	4.11	3.58	3.17	2.69	2.37	2.13	1.81	1.30		
			050	19.7	9.04	8.00	6.76	5.94	5.31	4.45	2.99		
			063	32.3	16.9	15.0	12.6	11.1	9.9	8.2	5.3		
			080	62.2	43.1	38.1	32.1	28.1	25.0	20.6	12.9		
			100	124	79.1	69.6	58.1	50.0	43.4	33.6			
			125	319	148	130	108	92	78	56			
			160	702	330	290	241	206	177	133			
			200	1200	520	454	373	313	261	176			
			250	2230	1090	950	770	640	520	320			
	120	MS	040	14.7	6.64	5.90	5.02	4.47	4.07	3.59	2.91	2.39	1.92
			050	32.6	15.0	13.3	11.3	10.1	9.2	8.0	6.4	5.0	
			063	57.7	24.4	21.6	18.4	16.3	14.8	12.9	10.0	7.5	
			080	117	62.5	55.4	47.1	41.7	37.7	32.7	25.1	18.3	
			100	260	115	102	86	76	68	58	40		
			125	497	236	209	176	155	138	115	75		
			160	1220	514	453	381	332	293	238	136		
			200	1610	798	703	587	505	439	340			
			250	5060	1580	1390	1140	970	820	580			

Output torque table

● PCIS (1 dwell)

Index number	Total index angle (deg)	Cam curve	Size	Static rated output torque (N·m)	Rated dynamic output torque (N·m) Input shaft rotational speed (rpm) 30	60	90	120	150	200	300	400	500
3	150	MS	040	23.2	10.4	9.2	7.9	7.0	6.4	5.7	4.8	4.1	3.6
			050	52.9	19.3	17.1	14.6	13.0	11.9	10.5	8.6	7.2	6.0
			063	72.1	48.5	43.1	36.7	32.7	29.9	26.5	21.9	18.5	15.6
			080	146	90.7	80.6	68.6	61.1	55.7	49.0	39.9	32.8	26.3
			100	376	169	150	128	113	103	90	70	54	
			125	808	334	296	251	222	201	174	132	95	
			160	1490	706	624	527	463	413	345	228		
			200	2630	1250	1100	930	810	720	590	360		
			250	5860	1850	1630	1360	1170	1010	770			
	180	MS	040	27.4	12.1	10.9	9.3	8.3	7.6	6.8	5.7	5.0	4.4
			050	62.5	22.5	20.3	17.3	15.4	14.1	12.5	10.4	9.0	7.8
			063	85.5	56.7	51.2	43.6	38.9	35.6	31.6	26.5	22.9	20.0
			080	173	106	96	81	73	66	59	49	41	35
			100	444	197	178	151	135	123	108	88	72	57
			125	957	389	351	298	265	241	211	168	133	100
			160	1770	824	740	627	553	498	425	306		
			200	3110	1460	1310	1100	970	870	730	490		
			250	6920	2160	1940	1620	1410	1230	980			
	210	MS	040	27.4	12.1	11.1	9.4	8.4	7.7	6.9	5.8	5.1	4.6
			050	62.5	22.5	20.6	17.5	15.7	14.3	12.7	10.7	9.3	8.2
			063	85.5	56.7	51.9	44.3	39.5	36.2	32.2	27.1	23.7	21.0
			080	173	106	97	83	74	67	60	50	43	38
			100	444	197	180	154	137	125	111	91	76	64
			125	957	389	356	303	270	246	217	176	145	116
			160	1770	824	752	638	565	511	442	336	241	
			200	3110	1460	1330	1130	990	890	760	550		
			250	6920	2170	1970	1660	1450	1290	1060	650		
	240	MS	040	27.4	12.1	11.2	9.5	8.5	7.8	7.0	5.9	5.2	4.7
			050	62.5	22.5	20.8	17.8	15.9	14.5	12.9	10.9	9.6	8.5
			063	85.5	56.7	52.5	44.8	40.0	36.6	32.6	27.6	24.2	21.6
			080	173	106	98	84	75	68	61	51	45	39
			100	444	197	183	156	139	127	112	93	80	68
			125	957	390	360	307	274	250	221	182	153	127
			160	1770	824	762	647	575	521	455	356	273	
			200	3110	1460	1350	1140	1010	910	790	600	430	
			250	6920	2170	2000	1690	1480	1330	1120	760		
	270	MS	040	27.4	12.1	11.3	9.7	8.6	7.9	7.0	6.0	5.3	4.8
			050	62.5	22.5	21.0	18.0	16.0	14.7	13.1	11.1	9.7	8.7
			063	85.5	56.7	53.1	45.3	40.5	37.1	33.0	28.0	24.7	22.2
			080	173	106	99	85	76	69	62	52	45	41
			100	444	197	185	158	141	128	114	95	82	72
			125	957	390	364	311	277	253	224	186	159	135
			160	1770	824	770	655	582	530	465	371	296	225
			200	3110	1460	1360	1160	1030	930	810	630	480	
			250	6920	2170	2020	1710	1510	1360	1160	840		
	300	MS	040	27.4	12.1	11.4	9.7	8.7	8.0	7.1	6.1	5.4	4.9
			050	62.5	22.5	21.2	18.1	16.2	14.8	13.2	11.2	9.9	8.9
			063	85.5	56.7	53.6	45.8	40.9	37.4	33.4	28.3	25.0	22.6
			080	173	106	100	85	76	70	62	53	46	41
			100	444	197	186	159	142	130	115	97	84	74
			125	957	390	368	314	280	256	227	190	163	142
			160	1770	824	778	662	589	537	473	383	313	249
			200	3110	1460	1380	1170	1040	940	830	660	520	390
			250	6920	2170	2040	1730	1530	1380	1190	900	620	

● PCIS (1 dwell)

Index number	Total index angle (deg)	Cam curve	Size	Static rated output torque (N·m)	Rated dynamic output torque (N·m) Input shaft rotational speed (rpm) 30	60	90	120	150	200	300	400	500
3	330	MS	040	27.4	12.1	11.4	9.8	8.8	8.0	7.2	6.1	5.4	4.9
			050	62.5	22.5	21.3	18.3	16.3	15.0	13.3	11.3	10.0	9.1
			063	85.5	56.7	53.7	46.1	41.2	37.8	33.7	28.6	25.4	22.9
			080	173	106	100	86	77	70	63	53	47	42
			100	444	197	187	160	143	131	117	98	86	76
			125	957	390	369	317	282	258	230	192	167	146
			160	1770	824	779	668	595	543	479	392	327	268
			200	3110	1460	1380	1180	1050	960	840	680	550	430
			250	6920	2170	2050	1750	1550	1410	1220	940	690	
4	90	MS	040	11.8	5.19	4.60	3.91	3.47	3.15	2.74	2.14	1.62	
			050	26.1	11.7	10.4	8.8	7.8	7.0	6.0	4.5	3.1	
			063	46.1	19.0	16.9	14.3	12.6	11.3	9.6	6.8		
			080	93.1	48.7	43.1	36.5	32.1	28.7	24.3	16.7		
			100	208	89.8	79.3	66.5	57.9	51.0	41.2	22.7		
			125	397	184	162	135	117	102	79			
			160	973	400	351	291	248	211	155			
			200	1290	622	543	445	371	306	200			
			250	4050	1230	1060	850	680	520				
	120	MS	040	18.7	8.16	7.25	6.18	5.51	5.03	4.45	3.67	3.10	2.61
			050	42.7	15.2	13.5	11.5	10.2	9.3	8.2	6.6	5.3	4.1
			063	58.2	38.2	34.0	28.9	25.7	23.4	20.6	16.7	13.6	10.8
			080	118	71.5	63.5	54.0	47.9	43.5	38.0	29.9	23.1	
			100	303	133	118	100	88	80	68	50	34	
			125	652	263	232	197	173	155	131	91		
			160	1200	556	490	411	357	313	250			
			200	2120	982	865	722	622	540	418			
			250	4720	1460	1270	1050	880	730	490			
	150	MS	040	22.4	9.67	8.69	7.41	6.61	6.05	5.38	4.51	3.91	3.43
			050	51.1	18.0	16.1	13.8	12.3	11.2	9.9	8.2	6.9	5.8
			063	69.9	45.4	40.8	34.8	31.0	28.3	25.1	20.8	17.7	15.1
			080	141	84.8	76.2	64.9	57.8	52.7	46.5	37.9	31.5	25.6
			100	363	158	142	120	107	97	85	67	52	
			125	782	311	279	237	210	190	165	126	92	
			160	1440	658	589	497	436	389	324	211		
			200	2540	1170	1040	870	760	670	540	310		
			250	5660	1730	1540	1280	1090	940	700			
	180	MS	040	22.4	9.67	8.84	7.54	6.73	6.16	5.49	4.62	4.05	3.60
			050	51.1	18.0	16.4	14.0	12.5	11.4	10.1	8.5	7.3	6.3
			063	69.9	45.4	41.5	35.4	31.6	28.9	25.7	21.5	18.6	16.2
			080	141	84.8	77.5	66.0	58.9	53.8	47.6	39.5	33.6	28.6
			100	363	158	144	123	109	99	87	71	58	46
			125	782	311	284	242	215	195	171	136	107	80
			160	1440	659	600	508	448	403	344	249		
			200	2540	1170	1060	900	790	700	590	400		
			250	5660	1740	1570	1320	1140	1000	800			
	210	MS	040	22.4	9.67	8.96	7.65	6.83	6.25	5.57	4.72	4.15	3.73
			050	51.1	18.0	16.6	14.2	12.7	11.6	10.3	8.7	7.5	6.7
			063	69.9	45.4	42.1	35.9	32.1	29.3	26.1	22.0	19.2	17.0
			080	141	84.8	78.6	67.0	59.8	54.6	48.5	40.6	35.0	30.4
			100	363	158	146	124	111	101	89	74	62	51
			125	782	311	288	245	218	199	175	142	117	93
			160	1440	659	609	517	458	414	358	273	196	
			200	2540	1170	1080	910	810	730	620	450		
			250	5660	1740	1600	1350	1180	1050	860	540		

Output torque table

● PCIS (1 dwell)

Index number	Total index angle (deg)	Cam curve	Size	Static rated output torque (N·m)	Rated dynamic output torque (N·m) Input shaft rotational speed (rpm) 30	60	90	120	150	200	300	400	500
4	240	MS	040	22.4	9.67	9.07	7.74	6.91	6.33	5.65	4.79	4.23	3.82
			050	51.1	18.0	16.8	14.4	12.8	11.7	10.5	8.8	7.7	6.9
			063	69.9	45.4	42.6	36.3	32.5	29.7	26.5	22.4	19.6	17.6
			080	141	84.8	79.5	67.8	60.6	55.4	49.3	41.4	36.0	31.8
			100	363	158	148	126	112	103	91	76	65	55
			125	782	311	292	249	222	202	179	147	123	103
			160	1440	659	617	524	466	422	369	289	222	
			200	2540	1170	1090	930	820	740	640	490	350	
			250	5660	1740	1620	1370	1210	1080	910	620		
	270	MS	040	22.4	9.67	9.15	7.82	6.99	6.40	5.71	4.85	4.30	3.89
			050	51.1	18.0	17.0	14.5	13.0	11.9	10.6	9.0	7.9	7.1
			063	69.9	45.4	43.0	36.7	32.8	30.1	26.8	22.7	20.0	18.0
			080	141	84.8	80.3	68.6	61.2	56.0	49.9	42.1	36.9	32.8
			100	363	158	149	127	114	104	92	77	67	58
			125	782	311	295	251	224	205	181	150	128	109
			160	1440	659	623	531	472	429	377	301	241	183
			200	2540	1170	1100	940	830	760	660	510	390	
			250	5660	1740	1640	1390	1230	1110	940	680	440	
	300	MS	040	22.4	9.67	9.15	7.90	7.06	6.47	5.77	4.91	4.36	3.95
			050	51.1	18.0	17.0	14.7	13.1	12.0	10.7	9.1	8.0	7.2
			063	69.9	45.4	43.0	37.1	33.1	30.4	27.1	23.0	20.3	18.3
			080	141	84.8	80.3	69.3	61.8	56.6	50.5	42.6	37.5	33.6
			100	363	158	149	129	115	105	93	78	68	60
			125	782	311	295	254	227	207	184	153	132	114
			160	1440	659	623	536	477	435	383	311	254	203
			200	2540	1170	1100	950	840	770	670	530	420	310
			250	5660	1740	1640	1410	1250	1130	970	730	510	
	330	MS	040	22.4	9.67	9.15	7.97	7.12	6.52	5.83	4.96	4.40	4.01
			050	51.1	18.0	17.0	14.8	13.2	12.1	10.8	9.2	8.1	7.3
			063	69.9	45.4	43.0	37.4	33.4	30.6	27.3	23.2	20.6	18.6
			080	141	84.8	80.3	69.9	62.4	57.1	50.9	43.1	38.1	34.2
			100	363	158	149	130	116	106	94	80	69	62
			125	782	311	295	256	229	209	186	156	135	118
			160	1440	659	623	542	482	440	388	318	265	218
			200	2540	1170	1100	960	850	780	680	550	450	350
			250	5660	1740	1640	1420	1260	1140	990	770	570	

Option	Pick and Place drive		Parallel cam drive	Roller gear cam drive				
	Linear	Circular		Basic	Wide angle	Table	Standard	Compact

Output torque table

● PCIS (2 dwell)

Index number	Total index angle (deg)	Cam curve	Size	Static rated output torque (N·m)	Rated dynamic output torque (N·m) Input shaft rotational speed (rpm) 15	30	45	60	75	100	150	200	250
6	120	MS	040	4.11	3.76	3.37	2.87	2.56	2.33	2.06	1.69	1.41	1.16
			050	19.7	9.49	8.51	7.25	6.45	5.87	5.17	4.18	3.41	2.71
			063	32.3	17.8	16.0	13.6	12.1	11.0	9.7	7.8	6.3	4.9
			080	62.2	45.3	40.6	34.6	30.7	27.9	24.5	19.6	15.6	11.8
			100	124	83.1	74.4	63.2	55.9	50.6	43.7	33.2	23.8	
			125	319	156	140	118	104	94	80	58		
			160	702	347	311	264	233	210	181	134		
			200	1200	547	489	413	364	326	275	190		
			250	2230	1140	1020	860	760	670	560	360		
	150	MS	040	14.7	6.79	6.22	5.30	4.73	4.33	3.85	3.24	2.83	2.51
			050	32.6	15.4	14.1	12.0	10.7	9.8	8.7	7.3	6.3	5.5
			063	57.7	24.9	22.8	19.5	17.4	15.9	14.1	11.7	10.0	8.6
			080	117	63.9	58.5	49.8	44.4	40.6	35.9	29.8	25.3	21.5
			100	260	118	108	92	82	74	66	53	43	34
			125	497	242	221	188	167	152	133	106	85	64
			160	1220	526	481	408	362	328	286	223	168	
			200	1610	817	746	633	560	505	435	324	223	
			250	5060	1620	1480	1250	1100	990	830	570		
	180	MS	040	23.2	10.4	9.7	8.2	7.4	6.7	6.0	5.1	4.5	4.1
			050	52.9	19.3	18.0	15.3	13.7	12.5	11.2	9.4	8.3	7.4
			063	72.1	48.6	45.2	38.6	34.5	31.6	28.1	23.7	20.9	18.7
			080	146	90.9	84.6	72.2	64.4	58.9	52.4	44.1	38.4	33.9
			100	376	170	158	135	120	110	97	81	69	59
			125	808	334	311	265	236	216	191	157	132	111
			160	1490	708	658	560	497	452	396	315	248	185
			200	2630	1250	1160	990	880	800	690	540	410	
			250	5860	1860	1720	1460	1290	1160	990	720	470	
	210	MS	040	23.2	10.4	9.8	8.4	7.5	6.8	6.1	5.2	4.6	4.2
			050	52.9	19.3	18.2	15.6	13.9	12.7	11.3	9.6	8.5	7.6
			063	72.1	48.6	45.9	39.1	35.0	32.0	28.6	24.2	21.4	19.2
			080	146	90.9	85.8	73.2	65.4	59.9	53.3	45.0	39.5	35.3
			100	376	170	160	137	122	111	99	83	72	63
			125	808	334	315	269	240	219	194	162	139	119
			160	1490	708	667	568	506	461	406	329	270	216
			200	2630	1250	1180	1000	890	810	710	570	460	350
			250	5860	1860	1750	1490	1320	1190	1030	790	570	
	240	MS	040	27.4	12.1	11.4	9.9	8.8	8.1	7.2	6.1	5.4	5.0
			050	62.5	22.5	21.3	18.3	16.4	15.0	13.4	11.4	10.1	9.1
			063	85.5	56.7	53.7	46.3	41.3	37.9	33.8	28.7	25.4	23.0
			080	173	106	100	86	77	71	63	53	47	42
			100	444	197	187	161	144	131	117	99	86	77
			125	957	390	369	317	283	259	230	193	168	148
			160	1770	824	780	670	597	545	481	395	330	273
			200	3110	1460	1380	1180	1050	960	840	680	560	440
			250	6920	2170	2050	1760	1560	1410	1230	950	710	
	270	MS	040	27.4	12.1	11.4	10.0	8.9	8.2	7.3	6.2	5.5	5.0
			050	62.5	22.5	21.3	18.5	16.6	15.2	13.5	11.5	10.2	9.3
			063	85.5	56.7	53.7	46.8	41.8	38.3	34.2	29.1	25.8	23.4
			080	173	106	100	87	78	71	64	54	48	43
			100	444	197	187	163	145	133	118	100	88	79
			125	957	390	369	321	286	262	233	197	172	153
			160	1770	824	780	678	604	552	489	405	344	292
			200	3110	1460	1380	1200	1070	970	860	700	590	480
			250	6920	2170	2050	1780	1580	1430	1260	1000	780	570

● PCIS (2 dwell)

Index number	Total index angle (deg)	Cam curve	Size	Static rated output torque (N·m)	Rated dynamic output torque (N·m) Input shaft rotational speed (rpm) 15	30	45	60	75	100	150	200	250
6	300	MS	040	27.4	12.1	11.4	10.1	9.0	8.2	7.4	6.3	5.6	5.1
			050	62.5	22.5	21.3	18.7	16.7	15.3	13.7	11.6	10.3	9.4
			063	85.5	56.7	53.7	47.2	42.2	38.7	34.5	29.4	26.1	23.8
			080	173	106	100	88	79	72	64	55	49	44
			100	444	197	187	164	147	134	120	101	89	80
			125	957	390	369	324	289	265	236	199	175	156
			160	1770	824	780	685	611	558	495	413	354	306
			200	3110	1460	1380	1210	1080	990	870	720	610	510
			250	6920	2170	2050	1800	1600	1450	1280	1030	830	650
	330	MS	040	27.4	12.1	11.4	10.1	9.1	8.3	7.4	6.3	5.6	5.1
			050	62.5	22.5	21.3	18.8	16.9	15.4	13.8	11.7	10.4	9.5
			063	85.5	56.7	53.7	47.6	42.6	39.0	34.8	29.7	26.4	24.1
			080	173	106	100	89	79	73	65	55	49	45
			100	444	197	187	165	148	136	121	103	91	82
			125	957	390	369	326	292	267	238	202	178	160
			160	1770	824	780	690	617	564	501	419	363	317
			200	3110	1460	1380	1220	1090	1000	880	730	630	540
			250	6920	2170	2050	1810	1610	1470	1300	1060	870	700
8	90	MS	040	3.25	2.94	2.61	2.22	1.97	1.79	1.57	1.24	0.98	
			050	15.5	7.42	6.59	5.59	4.96	4.50	3.91	3.03	2.27	
			063	25.5	13.9	12.4	10.5	9.3	8.4	7.3	5.6	4.1	
			080	49.1	35.4	31.4	26.7	23.6	21.3	18.4	13.9	9.8	
			100	97.9	65.0	57.5	48.6	42.7	38.2	32.1	21.8		
			125	252	122	108	91	79	70	58	35		
			160	555	271	240	202	177	158	131	83		
			200	944	428	377	316	275	241	193			
			250	1760	893	786	656	566	492	381			
	120	MS	040	11.8	5.37	4.88	4.16	3.71	3.40	3.01	2.52	2.17	1.88
			050	26.1	12.1	11.0	9.4	8.4	7.6	6.8	5.6	4.7	4.0
			063	46.1	19.7	17.9	15.3	13.6	12.4	10.9	9.0	7.5	6.1
			080	93.1	50.5	45.9	39.1	34.8	31.7	27.9	22.7	18.7	15.0
			100	208	93.1	84.5	71.9	63.8	57.9	50.5	39.6	30.4	
			125	397	191	173	147	130	118	102	78	57	
			160	973	415	376	319	282	254	217	159		
			200	1290	647	585	494	434	389	327	221		
			250	4050	1280	1160	970	850	750	610	340		
	150	MS	040	18.7	8.23	7.64	6.52	5.82	5.33	4.75	4.01	3.53	3.16
			050	42.7	15.3	14.2	12.1	10.8	9.9	8.8	7.4	6.4	5.6
			063	58.2	38.6	35.8	30.5	27.2	24.9	22.2	18.6	16.2	14.4
			080	118	72.2	67.0	57.1	50.9	46.5	41.3	34.5	29.7	25.7
			100	303	135	125	106	95	86	76	63	52	43
			125	652	265	246	209	186	169	149	121	98	78
			160	1200	561	520	441	391	354	307	235	173	
			200	2120	993	919	779	689	622	535	399	273	
			250	4720	1480	1360	1150	1010	900	750	500		
	180	MS	040	22.4	9.67	9.12	7.78	6.95	6.37	5.68	4.82	4.27	3.86
			050	51.1	18.0	16.9	14.4	12.9	11.8	10.5	8.9	7.8	7.0
			063	69.9	45.4	42.8	36.5	32.6	29.9	26.6	22.5	19.8	17.8
			080	141	84.8	80.0	68.2	60.9	55.7	49.6	41.7	36.5	32.3
			100	363	158	149	127	113	103	92	76	66	57
			125	782	311	293	250	223	203	180	149	126	106
			160	1440	659	620	528	469	426	373	295	232	170
			200	2540	1170	1100	930	830	750	650	500	370	
			250	5660	1740	1630	1380	1220	1090	930	660		

Output torque table

● PCIS (2 dwell)

Index number	Total index angle (deg)	Cam curve	Size	Static rated output torque (N·m)	Rated dynamic output torque (N·m)								
					Input shaft rotational speed (rpm)								
					15	30	45	60	75	100	150	200	250
8	210	MS	040	22.4	9.67	9.15	7.89	7.05	6.46	5.77	4.90	4.35	3.95
			050	51.1	18.0	17.0	14.7	13.1	12.0	10.7	9.1	8.0	7.2
			063	69.9	45.4	43.0	37.1	33.1	30.3	27.0	22.9	20.3	18.3
			080	141	84.8	80.3	69.2	61.8	56.6	50.4	42.6	37.4	33.5
			100	363	158	149	129	115	105	93	78	68	60
			125	782	311	295	254	226	207	184	153	132	114
			160	1440	659	623	536	477	434	382	310	253	201
			200	2540	1170	1100	950	840	770	670	530	420	310
			250	5660	1740	1640	1410	1240	1120	970	730	510	
	240	MS	040	22.4	9.67	9.15	7.99	7.14	6.54	5.84	4.97	4.42	4.02
			050	51.1	18.0	17.0	14.8	13.3	12.1	10.8	9.2	8.1	7.4
			063	69.9	45.4	43.0	37.5	33.5	30.7	27.4	23.3	20.6	18.7
			080	141	84.8	80.3	70.0	62.6	57.3	51.1	43.3	38.2	34.4
			100	363	158	149	130	116	106	95	80	70	62
			125	782	311	295	257	229	210	186	156	136	119
			160	1440	659	623	543	484	441	390	320	268	222
			200	2540	1170	1100	960	850	780	690	550	450	360
			250	5660	1740	1640	1430	1270	1150	1000	780	580	
	270	MS	040	22.4	9.67	9.15	8.07	7.22	6.61	5.91	5.03	4.48	4.08
			050	51.1	18.0	17.0	15.0	13.4	12.3	11.0	9.3	8.3	7.5
			063	69.9	45.4	43.0	37.9	33.9	31.0	27.7	23.6	20.9	19.0
			080	141	84.8	80.3	70.8	63.3	57.9	51.7	43.9	38.8	35.1
			100	363	158	149	132	118	108	96	81	71	64
			125	782	311	295	260	232	212	189	159	139	123
			160	1440	659	624	549	490	447	396	328	279	237
			200	2540	1170	1100	970	870	790	700	570	480	390
			250	5660	1740	1640	1440	1280	1170	1020	810	640	470
	300	MS	040	22.4	9.67	9.15	8.10	7.28	6.68	5.96	5.08	4.53	4.13
			050	51.1	18.0	17.0	15.1	13.5	12.4	11.1	9.4	8.4	7.6
			063	69.9	45.4	43.0	38.1	34.2	31.3	28.0	23.8	21.2	19.3
			080	141	84.8	80.3	71.1	63.9	58.5	52.2	44.4	39.4	35.7
			100	363	158	149	132	119	109	97	82	72	65
			125	782	311	295	261	234	214	191	161	142	126
			160	1440	659	624	552	495	452	401	334	287	248
			200	2540	1170	1100	980	880	800	710	580	490	420
			250	5660	1740	1640	1450	1300	1180	1040	840	680	530
	330	MS	040	22.4	9.67	9.15	8.10	7.35	6.73	6.02	5.13	4.57	4.17
			050	51.1	18.0	17.0	15.1	13.6	12.5	11.2	9.5	8.5	7.7
			063	69.9	45.4	43.0	38.1	34.5	31.6	28.2	24.0	21.4	19.5
			080	141	84.8	80.3	71.1	64.4	59.0	52.7	44.8	39.8	36.2
			100	363	158	149	132	120	110	98	83	73	66
			125	782	311	295	261	236	216	193	163	144	129
			160	1440	659	624	552	499	457	406	340	294	257
			200	2540	1170	1100	980	880	810	720	600	510	440
			250	5660	1740	1640	1450	1310	1200	1050	860	710	580

Option	Pick and Place drive		Parallel cam drive	Roller gear cam drive				
	Linear	Circular		Basic	Wide angle	Table	Standard	Compact

Output torque table

● PCOS

Oscillating angle (deg)	Total index angle (deg)	Cam curve	Size	Static rated output torque (N·m)	Rated dynamic output torque (N·m) Input shaft rotational speed (rpm) 15	30	45	60	75	100	150	200	250
45	120	MS	040	22.4	9.67	8.79	7.50	6.70	6.13	5.46	4.61	4.04	3.60
			050	51.1	18.0	16.3	13.9	12.4	11.4	10.1	8.4	7.3	6.4
			063	69.9	45.4	41.3	35.2	31.4	28.7	25.6	21.4	18.6	16.4
			080	141	84.8	77.1	65.7	58.6	53.5	47.5	39.5	33.9	29.1
			100	363	158	143	122	109	99	87	71	59	48
			125	782	311	283	241	214	195	171	138	112	88
			160	1440	659	597	506	447	403	345	253	167	
			200	2540	1170	1060	890	790	700	590	410		
			250	5660	1740	1570	1310	1140	1000	810	430		
	180	MS	040	22.4	9.67	9.12	7.78	6.95	6.37	5.69	4.83	4.28	3.88
			050	51.1	18.0	16.9	14.5	12.9	11.8	10.5	8.9	7.9	7.1
			063	69.9	45.4	42.8	36.6	32.7	29.9	26.7	22.6	20.0	18.0
			080	141	84.8	80.0	68.2	60.9	55.8	49.7	42.0	36.9	32.9
			100	363	158	149	127	113	104	92	77	67	59
			125	782	311	293	250	223	204	181	151	130	112
			160	1440	659	621	528	470	428	376	302	244	189
			200	2540	1170	1100	930	830	750	660	520	400	
			250	5660	1740	1630	1380	1220	1100	950	690	460	
	240	MS	040	22.4	9.67	9.15	7.99	7.14	6.54	5.84	4.97	4.43	4.03
			050	51.1	18.0	17.0	14.8	13.3	12.1	10.8	9.2	8.2	7.4
			063	69.9	45.4	43.0	37.5	33.5	30.7	27.4	23.3	20.7	18.8
			080	141	84.8	80.3	70.1	62.6	57.3	51.2	43.4	38.4	34.8
			100	363	158	149	130	116	107	95	80	71	63
			125	782	311	295	257	229	210	187	158	138	123
			160	1440	659	624	543	484	442	392	324	275	233
			200	2540	1170	1100	960	860	780	690	560	470	390
			250	5660	1740	1640	1430	1270	1150	1010	800	620	450
	300	MS	040	22.4	9.67	9.15	8.10	7.29	6.68	5.96	5.08	4.53	4.14
			050	51.1	18.0	17.0	15.1	13.5	12.4	11.1	9.4	8.4	7.6
			063	69.9	45.4	43.0	38.1	34.2	31.4	28.0	23.8	21.2	19.4
			080	141	84.8	80.3	71.1	63.9	58.5	52.3	44.5	39.5	35.9
			100	363	158	149	132	119	109	97	82	73	66
			125	782	311	295	261	234	215	191	162	143	129
			160	1440	659	624	552	495	453	402	337	292	255
			200	2540	1170	1100	980	880	800	710	590	510	440
			250	5660	1740	1640	1450	1300	1190	1050	850	700	570
	360	MS	040	22.4	9.67	9.15	8.10	7.41	6.79	6.07	5.17	4.61	4.22
			050	51.1	18.0	17.0	15.1	13.8	12.6	11.3	9.6	8.5	7.8
			063	69.9	45.4	43.0	38.1	34.8	31.9	28.5	24.3	21.6	19.8
			080	141	84.8	80.3	71.1	65.0	59.5	53.2	45.3	40.3	36.7
			100	363	158	149	132	121	111	99	84	75	68
			125	782	311	295	261	238	218	195	165	147	133
			160	1440	659	624	552	504	461	411	346	303	269
			200	2540	1170	1110	980	890	820	730	610	530	460
			250	5660	1740	1650	1450	1330	1210	1070	890	750	640
30	90	MS	040	31.1	14.0	12.6	10.8	9.6	8.8	7.8	6.6	5.8	5.2
			050	70.9	26.1	23.5	20.0	17.9	16.4	14.6	12.2	10.6	9.4
			063	96.9	65.6	59.2	50.5	45.1	41.3	36.7	30.9	27.0	23.9
			080	196	123	111	94	84	77	68	57	49	43
			100	503	229	206	176	157	143	126	104	88	73
			125	1080	451	407	347	309	281	248	202	167	135
			160	2000	954	859	729	645	583	503	380	270	
			200	3520	1690	1520	1280	1130	1020	870	630		
			250	7850	2500	2240	1890	1650	1460	1200	720		

● PCOS

Oscillating angle (deg)	Total index angle (deg)	Cam curve	Size	Static rated output torque (N·m)	Rated dynamic output torque (N·m) Input shaft rotational speed (rpm) 15	30	45	60	75	100	150	200	250
30	120	MS	040	31.1	14.0	12.9	11.0	9.9	9.0	8.1	6.9	6.1	5.5
			050	70.9	26.1	24.1	20.6	18.4	16.8	15.0	12.7	11.2	10.0
			063	96.9	65.6	60.8	51.9	46.3	42.4	37.8	32.1	28.3	25.5
			080	196	123	113	97	86	79	70	59	52	47
			100	503	229	212	181	161	147	131	110	95	83
			125	1080	451	418	356	318	290	258	215	184	159
			160	2000	954	883	751	668	607	533	427	342	262
			200	3520	1690	1560	1320	1180	1070	930	730	560	
			250	7850	2500	2310	1960	1730	1550	1330	970		
	180	MS	040	31.1	14.0	13.2	11.5	10.2	9.4	8.4	7.1	6.4	5.8
			050	70.9	26.1	24.7	21.4	19.1	17.5	15.6	13.3	11.8	10.7
			063	96.9	65.6	62.1	53.8	48.1	44.1	39.4	33.5	29.8	27.1
			080	196	123	116	100	90	82	73	62	55	50
			100	503	229	217	188	168	153	137	116	102	92
			125	1080	451	427	370	330	302	269	228	200	179
			160	2000	955	903	781	697	637	565	470	402	346
			200	3520	1690	1600	1380	1230	1120	990	820	690	580
			250	7850	2500	2370	2040	1820	1650	1450	1160	930	720
	240	MS	040	31.1	14.0	13.2	11.7	10.5	9.6	8.6	7.3	6.6	6.0
			050	70.9	26.1	24.7	21.8	19.6	18.0	16.0	13.7	12.2	11.1
			063	96.9	65.6	62.1	55.0	49.4	45.2	40.4	34.4	30.7	28.0
			080	196	123	116	103	92	84	75	64	57	52
			100	503	229	217	192	172	158	141	120	106	96
			125	1080	451	427	378	339	311	277	235	209	189
			160	2000	955	904	799	717	656	584	491	429	381
			200	3520	1690	1600	1410	1270	1160	1030	860	750	660
			250	7850	2500	2370	2090	1870	1710	1510	1250	1060	890
	300	MS	040	31.1	14.0	13.2	11.7	10.7	9.8	8.8	7.5	6.7	6.1
			050	70.9	26.1	24.7	21.8	20.0	18.3	16.4	14.0	12.5	11.4
			063	96.9	65.6	62.1	55.0	50.4	46.2	41.3	35.2	31.4	28.7
			080	196	123	116	103	94	86	77	66	59	53
			100	503	229	217	192	176	161	144	122	109	99
			125	1080	451	427	378	346	317	283	241	214	195
			160	2000	955	904	800	732	670	597	506	446	400
			200	3520	1690	1600	1410	1290	1180	1050	890	780	700
			250	7850	2500	2370	2100	1920	1750	1560	1300	1120	980
	360	MS	040	31.1	14.0	13.2	11.7	10.7	10.0	8.9	7.6	6.8	6.2
			050	70.9	26.1	24.7	21.8	20.0	18.6	16.7	14.2	12.7	11.6
			063	96.9	65.6	62.2	55.0	50.5	46.9	42.0	35.8	31.9	29.2
			080	196	123	116	103	94	88	78	67	60	54
			100	503	229	217	192	176	164	146	125	111	101
			125	1080	451	427	378	347	323	288	245	219	199
			160	2000	955	904	800	733	682	608	516	457	413
			200	3520	1690	1600	1410	1300	1200	1070	910	800	720
			250	7850	2500	2370	2100	1920	1780	1590	1340	1170	1040
15	60	MS	040	35.0	16.3	14.7	12.5	11.2	10.2	9.1	7.7	6.8	6.1
			050	79.8	30.5	27.4	23.4	20.9	19.1	17.0	14.3	12.4	10.9
			063	109	76.7	68.8	58.7	52.4	48.0	42.7	35.9	31.4	27.9
			080	220	143	128	110	98	89	79	66	57	50
			100	567	268	240	205	183	167	147	122	103	86
			125	1220	529	474	404	360	328	289	236	196	159
			160	2250	1120	1000	850	750	680	590	450	320	
			200	3970	1970	1760	1490	1320	1190	1010	740		
			250	8830	2910	2600	2190	1910	1700	1390	850		

Output torque table

● PCOS

Oscillating angle (deg)	Total index angle (deg)	Cam curve	Size	Static rated output torque (N·m)	Rated dynamic output torque (N·m) Input shaft rotational speed (rpm) 15	30	45	60	75	100	150	200	250
15	90	MS	040	35.0	16.3	15.2	13.0	11.6	10.6	9.5	8.1	7.2	6.5
			050	79.8	30.5	28.4	24.3	21.7	19.9	17.7	15.0	13.3	12.0
			063	109	76.7	71.4	60.9	54.4	49.9	44.5	37.8	33.4	30.2
			080	220	143	133	114	102	93	83	70	62	56
			100	567	268	250	213	190	174	155	130	114	101
			125	1220	529	492	420	375	343	305	255	221	194
			160	2250	1120	1040	880	790	720	630	520	430	340
			200	3970	1970	1830	1560	1390	1260	1110	890	710	550
			250	8830	2910	2710	2300	2030	1840	1590	1210	860	
	120	MS	040	35.0	16.3	15.5	13.3	11.9	10.9	9.7	8.3	7.4	6.7
			050	79.8	30.5	28.9	24.9	22.3	20.4	18.2	15.5	13.8	12.5
			063	109	76.7	72.6	62.5	55.9	51.2	45.7	38.9	34.6	31.5
			080	220	143	136	117	104	96	85	72	64	58
			100	567	268	254	219	195	179	159	135	119	107
			125	1220	529	501	431	385	352	314	265	233	209
			160	2250	1120	1060	910	810	740	660	550	470	400
			200	3970	1970	1860	1600	1430	1300	1150	950	810	680
			250	8830	2920	2760	2370	2100	1920	1680	1350	1090	840
	180	MS	040	35.0	16.3	15.5	13.7	12.4	11.3	10.1	8.6	7.7	7.0
			050	79.8	30.5	28.9	25.6	23.1	21.2	18.9	16.1	14.4	13.1
			063	109	76.7	72.6	64.3	58.0	53.1	47.5	40.5	36.1	33.0
			080	220	143	136	120	108	99	89	76	67	61
			100	567	268	254	225	203	186	166	141	125	114
			125	1220	529	501	443	400	366	327	278	247	224
			160	2250	1120	1060	940	840	770	690	580	510	460
			200	3970	1970	1860	1650	1490	1360	1210	1020	890	790
			250	8830	2920	2760	2440	2200	2010	1780	1480	1270	1100
	240	MS	040	35.0	16.3	15.5	13.7	12.6	11.6	10.4	8.9	7.9	7.2
			050	79.8	30.5	28.9	25.6	23.5	21.7	19.4	16.6	14.8	13.5
			063	109	76.7	72.6	64.3	59.0	54.6	48.7	41.6	37.1	34.0
			080	220	143	136	120	110	102	91	78	69	63
			100	567	268	254	225	206	191	170	145	129	118
			125	1220	529	501	443	407	376	336	286	255	232
			160	2250	1120	1060	940	860	790	710	600	530	480
			200	3970	1970	1870	1650	1510	1400	1250	1060	930	840
			250	8830	2920	2760	2440	2240	2070	1840	1550	1350	1200
	300	MS	040	35.0	16.3	15.5	13.7	12.6	11.7	10.6	9.0	8.1	7.4
			050	79.8	30.5	28.9	25.6	23.5	22.0	19.8	16.9	15.1	13.8
			063	109	76.7	72.6	64.3	59.0	55.1	49.7	42.5	37.9	34.7
			080	220	143	136	120	110	103	93	79	71	65
			100	567	268	254	225	206	193	174	148	132	121
			125	1220	529	501	443	407	380	343	292	261	238
			160	2250	1120	1060	940	860	800	720	620	550	500
			200	3970	1970	1870	1650	1510	1420	1270	1080	960	870
			250	8830	2920	2760	2440	2240	2090	1880	1590	1410	1260
	360	MS	040	35.0	16.3	15.5	13.7	12.6	11.7	10.8	9.2	8.2	7.5
			050	79.8	30.5	28.9	25.6	23.5	22.0	20.1	17.2	15.4	14.1
			063	109	76.7	72.6	64.3	59.0	55.2	50.6	43.2	38.6	35.3
			080	220	143	136	120	110	103	94	81	72	66
			100	567	268	254	225	206	193	177	151	135	123
			125	1220	529	501	443	407	380	349	297	265	243
			160	2250	1120	1060	940	860	800	740	630	560	510
			200	3970	1970	1870	1650	1510	1420	1300	1100	980	890
			250	8830	2920	2760	2440	2240	2090	1920	1630	1440	1300