Electric actuator
Motor specification

FFLD

2-Finger Gripper

CONTENTS

Product introduction	Intro
● Specifications/How to order/Dimensions	
• FFLD-08	2
• FFLD-30	4
• FFLD-50	6
● System configuration	18
● Field Network Description	19
● Model selection	20
● Technical data	22
⚠ Safety precautions	24
Model Selection Check Sheet	32

Electric Actuator 2-Finger Gripper

FFLD-08

□20 Stepper motor

How to order

FFLD - 08 50 N C N 30 - LK S R00

Ⓐ Ⓑ Ⓒ Ⓓ

ⒶGripping force

08	80N

ⒷStroke

50	100 mm (single side 50 mm)

ⒸInterface specification

LK	IO-Link

ⒹRelay cable

R00	Movable cable

Specifications

Motor		□20 stepper motor
Encoder type		Incremental encoder
Drive method		Rack and pinion, worm gear
Controller		Built in
Stroke	mm	100 (50 per side)
Max. gripping force *1	N	80 (per side)
Open/close speed range	mm/s	1 to 10 (per side)
Gripping speed range *1	mm/s	1 to 5 (per side)
Repeatability *2	mm	±0.02
Positioning repeatability *3	mm	±0.05 (per side)
Lost motion	mm	0.4 or less (per side)
Static allowable moment	N·m	MP: 15, MY: 15, MR: 15
Settings tool		Setting software (S-Tools)
External interface		IO-Link
Power supply voltage	Communication/control	24 VDC ±10%
	Power	24 VDC ±10%
Current consumption	Communication/control A	0.2 or less
	Power A	1.1 or less
Motor section max. instantaneous current	A	1.5
Power capacity		Max. 100 W
Insulation resistance		10 MΩ, 500 VDC
Withstand voltage		500 VAC for 1 minute
Operating ambient temperature, humidity		0 to 40 °C (no freezing) 35 to 80% RH (no condensation)
Storage ambient temperature, humidity		-10 to 50°C (no freezing) 35 to 80% RH (no condensation)
Atmosphere		No corrosive gas, explosive gas, or dust
Degree of protection		IP20
Weight	kg	1.2

*1 Gripping is done with pressing operation.
*2 Repeat accuracy indicates the variation when the same workpiece is repeatedly gripped at the same force, under the same operation conditions.
*3 The stop position will vary if positioning repeatability is checked using the same point.

Gripping force and pressing rate

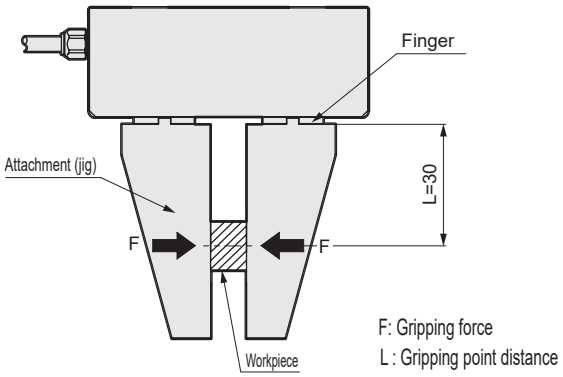

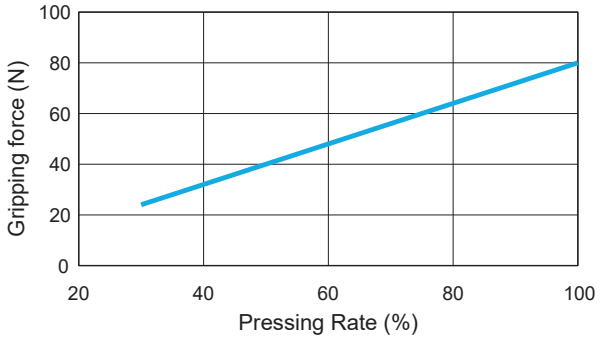

* The correlation diagram of the gripping force and pressing rate shows a guideline. Individual motor differences and variations in mechanical efficiency may result in differing actual values, even at the same pressing rate.
* Gripping speed is for 5mm/s. (L=30)
* The setting range for the pressing rate is 30 to 100%.

Dimensions

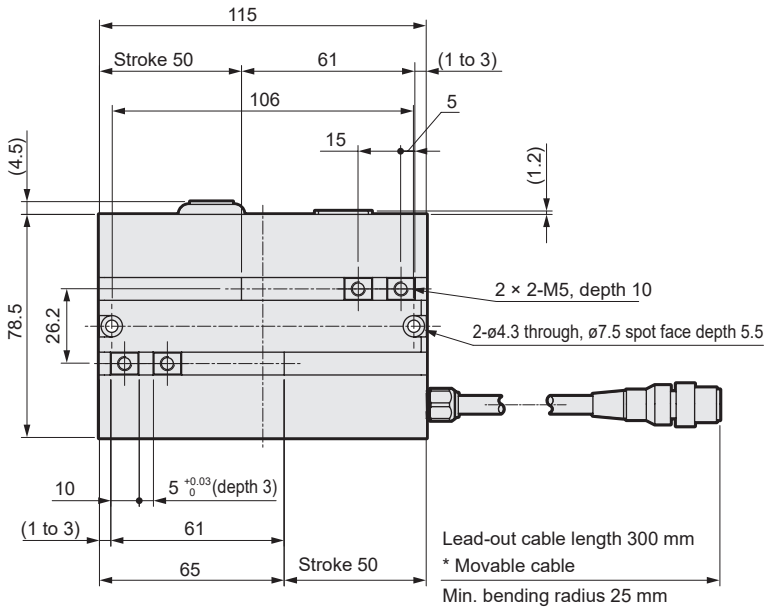
115
Stroke 50
61
(1 to 3)
106
5
15
(4.5)
(1.2)
78.5
26.2
2 × 2-M5, depth 10
2-ø4.3 through, ø7.5 spot face depth 5.5
10
5 +0.03 0 (depth 3)
(1 to 3)
61
65
Stroke 50
Lead-out cable length 300 mm
* Movable cable
Min. bending radius 25 mm

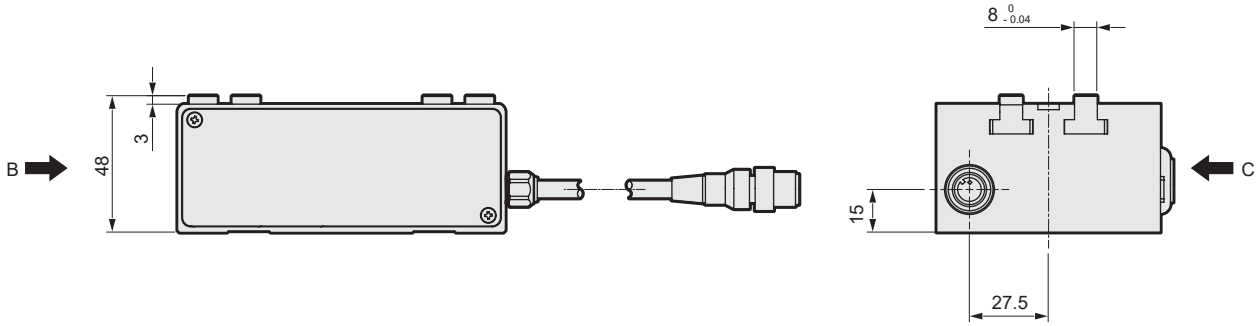
B
48
3
8 0 -0.04
15
27.5
C

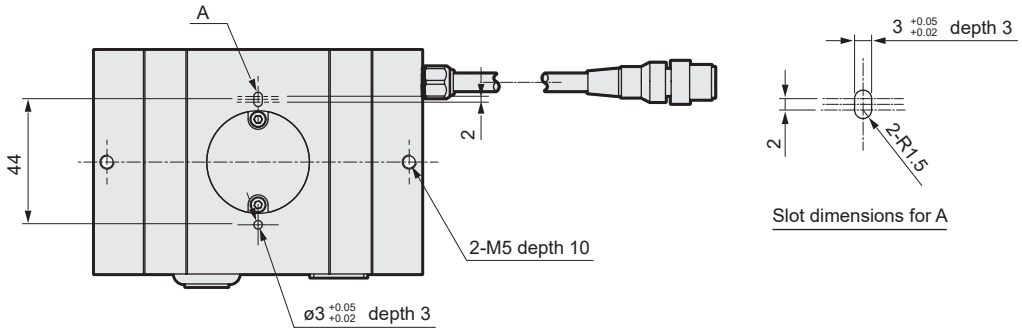
A
44
2
2-M5 depth 10
ø3 +0.05 +0.02 depth 3
3 +0.05 +0.02 depth 3
2
2-R1.5
Slot dimensions for A

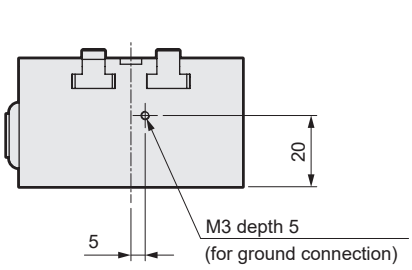
20
5
M3 depth 5
(for ground connection)
B arrow view

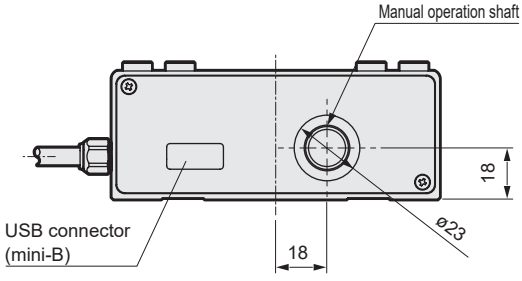
Manual operation shaft
18
USB connector
(mini-B)
18
ø23
C arrow view

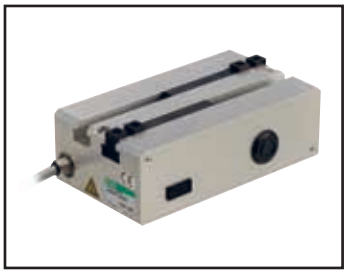

Electric Actuator 2-Finger Gripper

FFLD-30

□25L stepping motor

How to order

FFLD - 30 70 N C N 30 - LK S R00

Ⓐ Ⓑ Ⓒ Ⓓ

ⒶGripping force	
30	300 N

ⒷStroke	
70	140 mm (single side 70 mm)

ⒸInterface specification	
LK	IO-Link

ⒹRelay cable	
R00	Movable cable

Specifications

Motor		□25L stepper motor
Encoder type		Incremental encoder
Drive method		Rack and pinion, worm gear
Controller		Built in
Stroke	mm	140 (70 per side)
Max. gripping force *1	N	300 (per side)
Open/close speed range	mm/s	1 to 10 (per side)
Gripping speed range *1	mm/s	1 to 5 (per side)
Repeatability *2	mm	±0.02
Positioning repeatability *3	mm	±0.05 (per side)
Lost motion	mm	0.4 or less (per side)
Static allowable moment	N·m	MP: 45, MY: 45, MR: 45
Settings tool		Setting software (S-Tools)
External interface		IO-Link
Power supply voltage	Communication/control	24 VDC ±10%
	Power	24 VDC ±10%
Current consumption	Communication/control A	0.2 or less
	Power A	3.2 or less
Motor section max. instantaneous current	A	4.0
Power capacity		Max. 100 W
Insulation resistance		10 MΩ, 500 VDC
Withstand voltage		500 VAC for 1 minute
Operating ambient temperature, humidity		0 to 40 °C (no freezing) 35 to 80% RH (no condensation)
Storage ambient temperature, humidity		-10 to 50°C (no freezing) 35 to 80% RH (no condensation)
Atmosphere		No corrosive gas, explosive gas, or dust
Degree of protection		IP20
Weight	kg	1.7

*1 Gripping is done with pressing operation.
*2 Repeat accuracy indicates the variation when the same workpiece is repeatedly gripped at the same force, under the same operation conditions.
*3 The stop position will vary if positioning repeatability is checked using the same point.

Gripping force and pressing rate

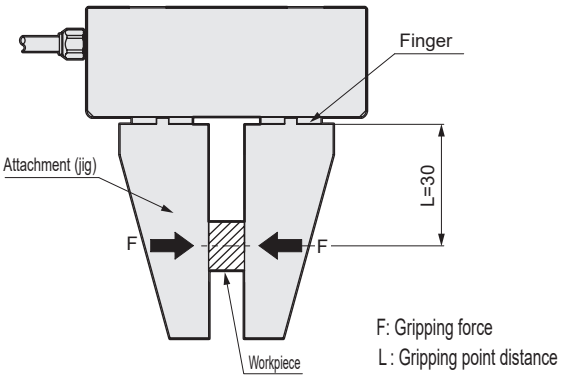

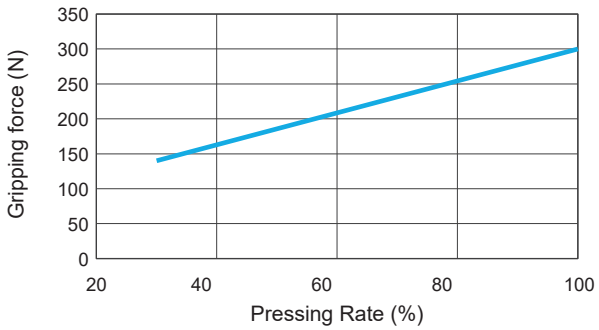

* The correlation diagram of the gripping force and pressing rate shows a guideline. Individual motor differences and variations in mechanical efficiency may result in differing actual values, even at the same pressing rate.
* Gripping speed is for 5mm/s. (L=30)
* The setting range for the pressing rate is 30 to 100%.

Dimensions

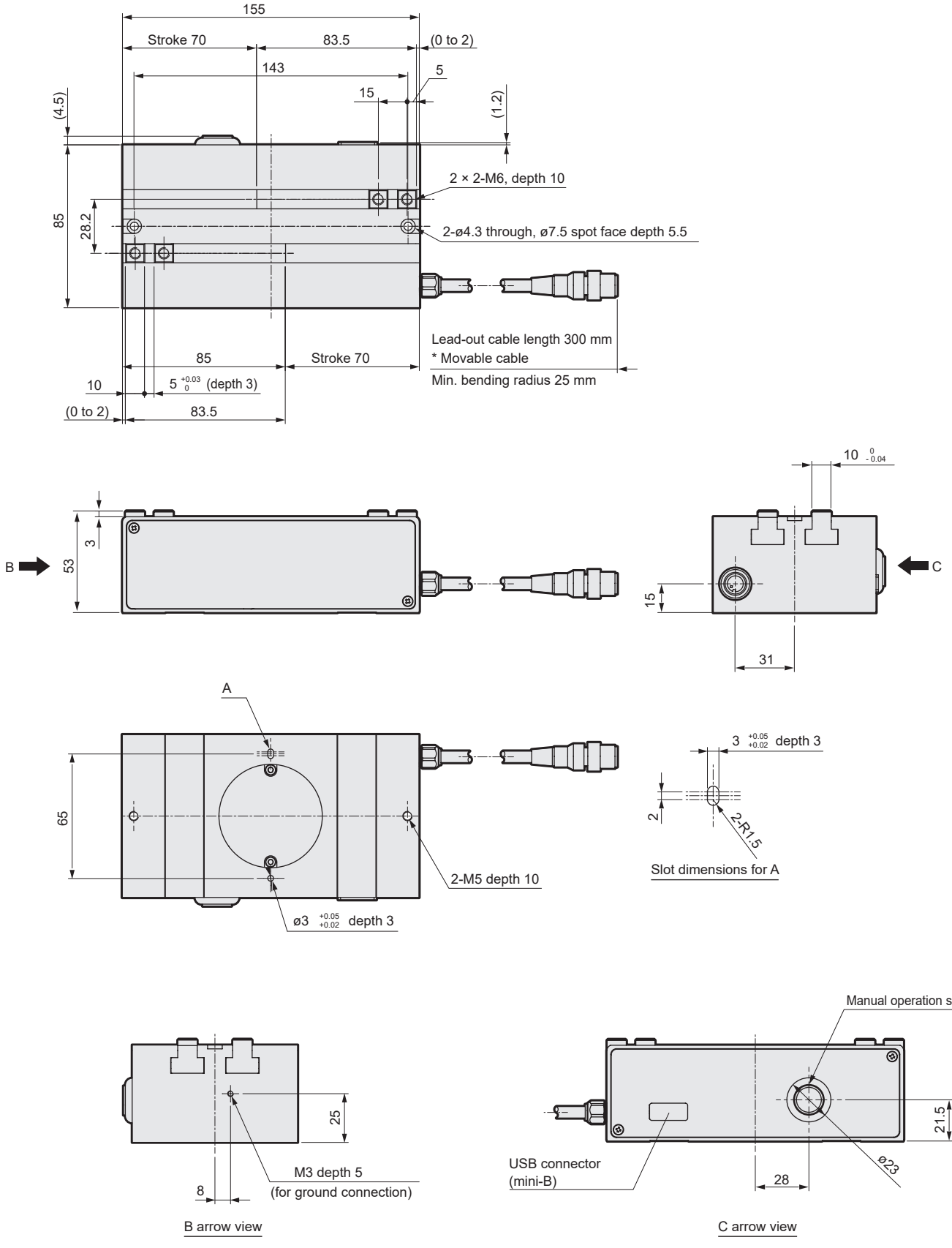
155
Stroke 70
83.5
(0 to 2)
143
5
15
(4.5)
(1.2)
2 × 2-M6, depth 10
85
28.2
2-ø4.3 through, ø7.5 spot face depth 5.5
Lead-out cable length 300 mm
* Movable cable
Min. bending radius 25 mm
85
Stroke 70
10
5 +0.03 0 (depth 3)
(0 to 2)
83.5
B
53
3
10 0 -0.04
C
15
31
A
65
2-M5 depth 10
ø3 +0.05 +0.02 depth 3
3 +0.05 +0.02 depth 3
2
2R1.5
Slot dimensions for A
25
8
M3 depth 5
(for ground connection)
B arrow view
Manual operation shaft
21.5
USB connector
(mini-B)
28
ø23
C arrow view

Electric Actuator 2-Finger Gripper

FFLD-50

□25L stepping motor

How to order

FFLD - 50 (A) 80 (B) N C N 30 - LK (C) S R00 (D)

Ⓐ Gripping force	
50	500 N

Ⓒ Interface specification	
LK	IO-Link

Ⓑ Stroke	
80	160 mm (single side 80 mm)

Ⓓ Relay cable	
R00	Movable cable

Specifications

Motor		□25L stepper motor
Encoder type		Incremental encoder
Drive method		Rack and pinion, worm gear
Controller		Built in
Stroke	mm	160 (80 per side)
Max. gripping force *1	N	500 (per side)
Open/close speed range	mm/s	1 to 10 (per side)
Gripping speed range *1	mm/s	1 to 5 (per side)
Repeatability *2	mm	±0.02
Positioning repeatability *3	mm	±0.05 (per side)
Lost motion	mm	0.4 or less (per side)
Static allowable moment	N·m	MP: 64, MY: 55, MR: 64
Settings tool		Setting software (S-Tools)
External interface		IO-Link
Power supply voltage	Communication/control	24 VDC ±10%
	Power	24 VDC ±10%
Current consumption	Communication/control A	0.2 or less
	Power A	3.2 or less
Motor section max. instantaneous current	A	4.0
Power capacity		Max. 100 W
Insulation resistance		10 MΩ, 500 VDC
Withstand voltage		500 VAC for 1 minute
Operating ambient temperature, humidity		0 to 40 °C (no freezing) 35 to 80% RH (no condensation)
Storage ambient temperature, humidity		-10 to 50 °C (no freezing) 35 to 80% RH (no condensation)
Atmosphere		No corrosive gas, explosive gas, or dust
Degree of protection		IP20
Weight	kg	2.5

*1 Gripping is done with pressing operation.
*2 Repeat accuracy indicates the variation when the same workpiece is repeatedly gripped at the same force, under the same operation conditions.
*3 The stop position will vary if positioning repeatability is checked using the same point.

Gripping force and pressing rate

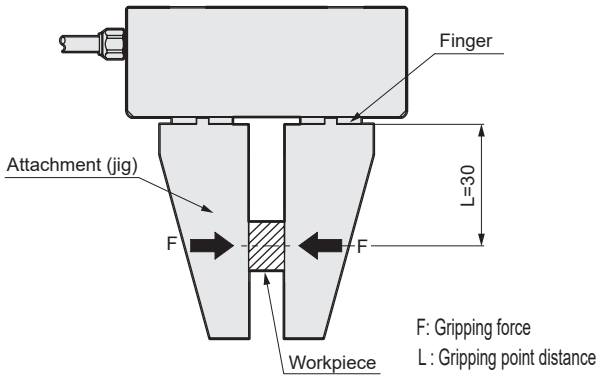

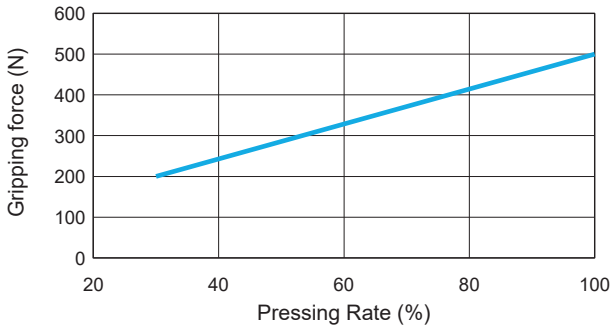

* The correlation diagram of the gripping force and pressing rate shows a guideline. Individual motor differences and variations in mechanical efficiency may result in differing actual values, even at the same pressing rate.
* Gripping speed is for 5mm/s. (L=30)
* The setting range for the pressing rate is 30 to 100%.

Dimensions

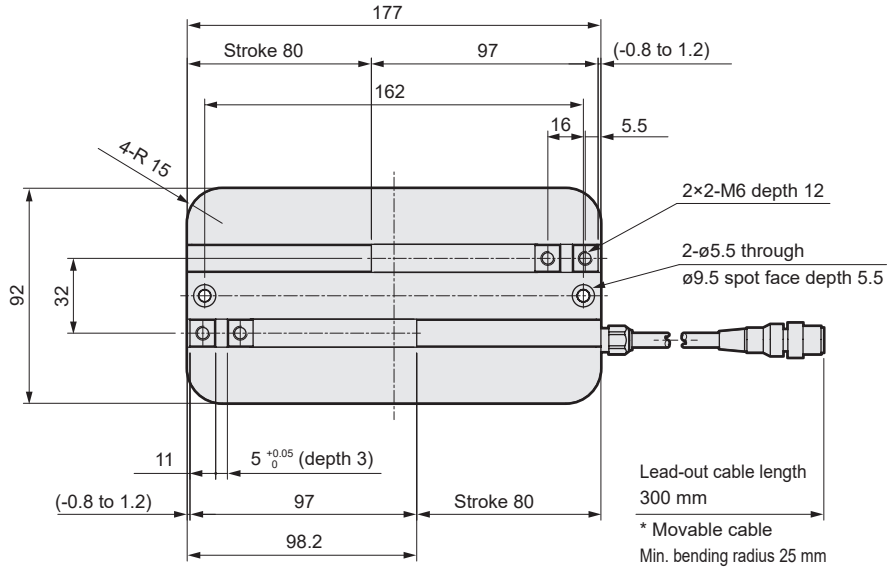

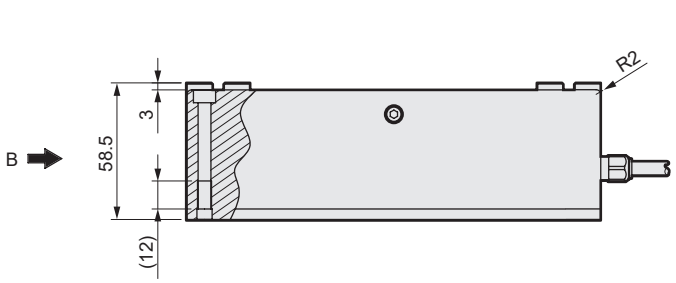

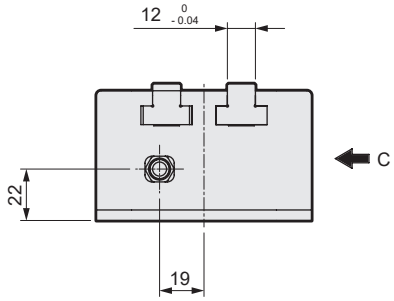

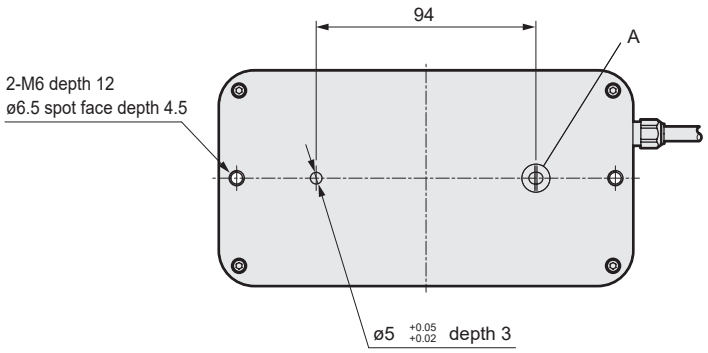

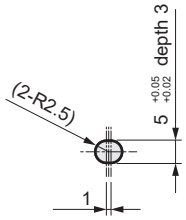

Slot dimensions for A

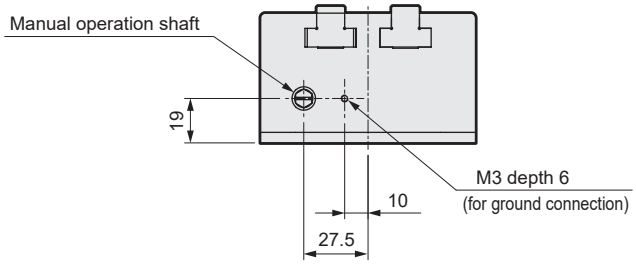

B arrow view

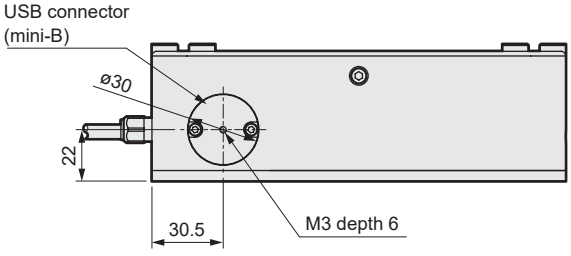

C arrow view

Electric actuator
Motor specification

FFLD-H

2-Finger Gripper high speed

CONTENTS

Product introduction	Intro
● Specifications/How to order/Dimensions	
・FFLD-04H	10
・FFLD-12H	12
・FFLD-30H	14
・FFLD-50H	16
● System configuration	18
● Field Network Description	19
● Model selection	20
● Technical data	22
⚠Safety precautions	24
Model Selection Check Sheet	32

Electric Actuator 2-Finger Gripper High speed

FFLD-04H

□20 Stepper motor

How to order

FFLD - 04 H 50 N C N 30 - LK S R00

Ⓐ Ⓑ Ⓒ Ⓓ

Ⓐ Gripping force	
04	40N

Ⓑ Stroke	
50	100 mm (single side 50 mm)

Ⓒ Interface specification	
LK	IO-Link

Ⓓ Relay cable	
R00	Movable cable

Specifications

Motor		□20 Stepper motor
Encoder-type		Incremental encoder
Drive method		Rack and pinion, worm gear
Controller		Built in
Stroke	mm	100 (50 per side)
Max. gripping force *1	N	40 (per side)
Open/close speed range	mm/s	1 to 30 (per side)
Gripping speed range *1	mm/s	1 to 5 (per side)
Repeatability *2	mm	±0.02
Positioning repeatability *3	mm	±0.05 (per side)
Lost motion	mm	0.4 or less (per side)
Static allowable moment	N·m	MP: 15, MY: 15, MR: 15
Settings tool		Setting software (S-Tools)
External interface		IO-Link
Power supply voltage	Communication/control	24 VDC ±10%
	Power	24 VDC ±10%
Current consumption	Communication/control A	0.2 or less
	Power A	1.1 or less
Motor section max. instantaneous current	A	1.5
Power capacity		Max. 100 W
Insulation resistance		10 MΩ, 500 VDC
Withstand voltage		500 VAC for 1 minute
Operating ambient temperature, humidity		0 to 40 °C (no freezing) 35 to 80% RH (no condensation)
Storage ambient temperature, humidity		-10 to 50°C (no freezing) 35 to 80% RH (no condensation)
Atmosphere		No corrosive gas, explosive gas, or dust
Degree of protection		IP20
Weight	kg	1.2

*1 Gripping is done with pressing operation.
*2 Repeatability indicates variation when the same workpieces are gripped repeatedly with the same operating conditions.
*3 The variation of stopping position when positioning is repeatedly performed to the same point is shown.

Gripping force and pressing rate

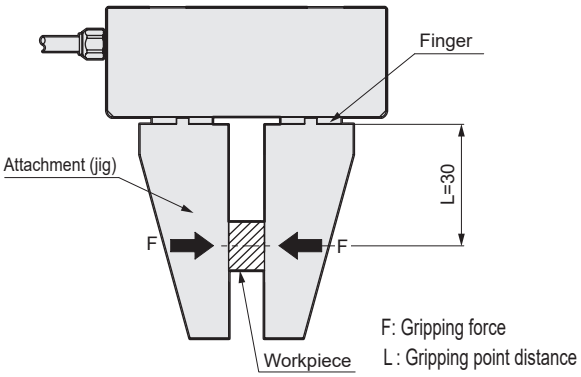

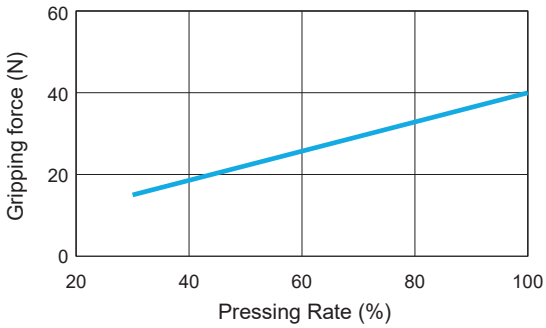

* The correlation diagram of the gripping force and pressing rate shows a guideline. Individual motor differences and variations in mechanical efficiency may result in differing actual values, even at the same pressing rate.
* Gripping speed is for 5mm/s. (L=30)
* The setting range for the pressing rate is 30 to 100%.

Dimensions

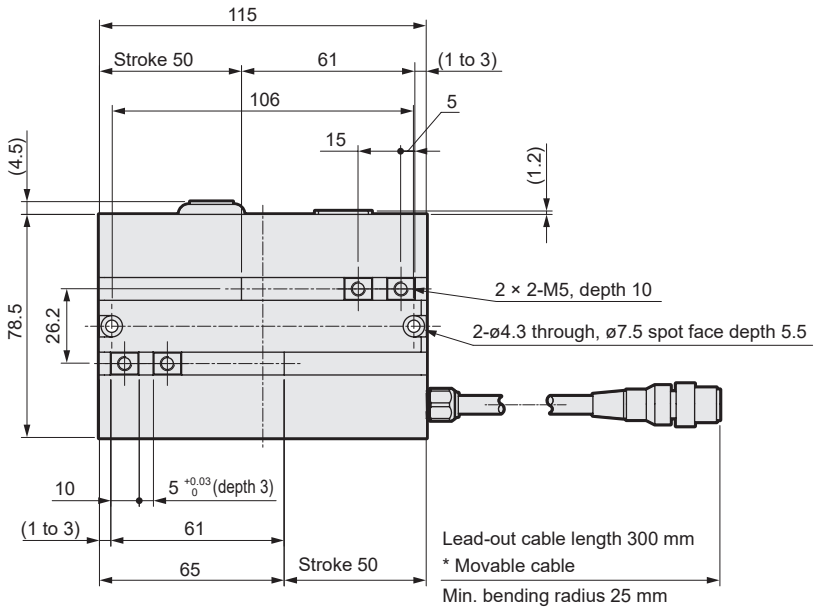
115
Stroke 50
61
(1 to 3)
106
5
15
(4.5)
(1.2)
78.5
26.2
2 × 2-M5, depth 10
2-ø4.3 through, ø7.5 spot face depth 5.5
10
5 +0.03 0 (depth 3)
(1 to 3)
61
65
Stroke 50
Lead-out cable length 300 mm
* Movable cable
Min. bending radius 25 mm

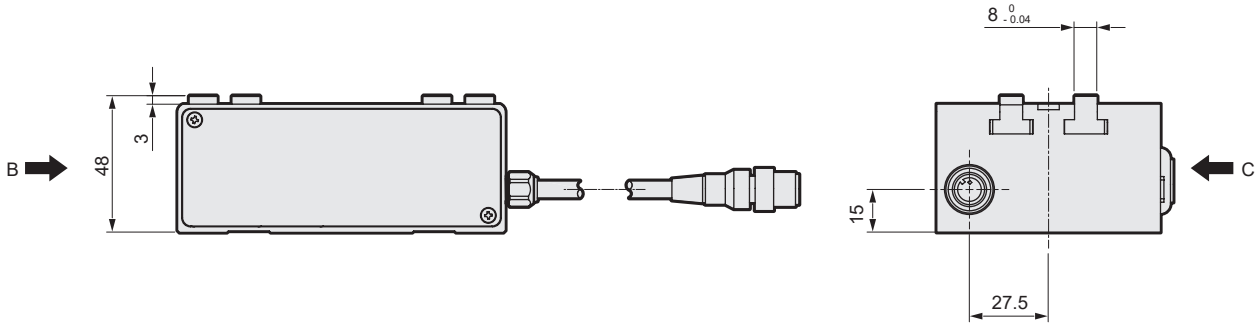
B
48
3
8 0 -0.04
C
15
27.5

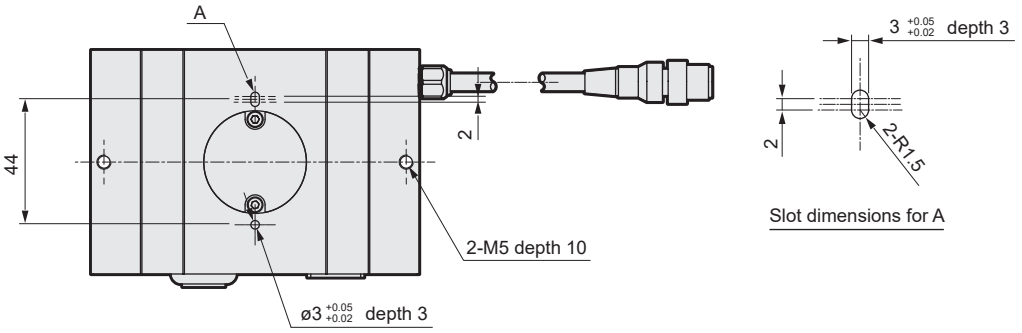
A
44
2
2-M5 depth 10
ø3 +0.05 +0.02 depth 3
3 +0.05 +0.02 depth 3
2
2-R1.5
Slot dimensions for A

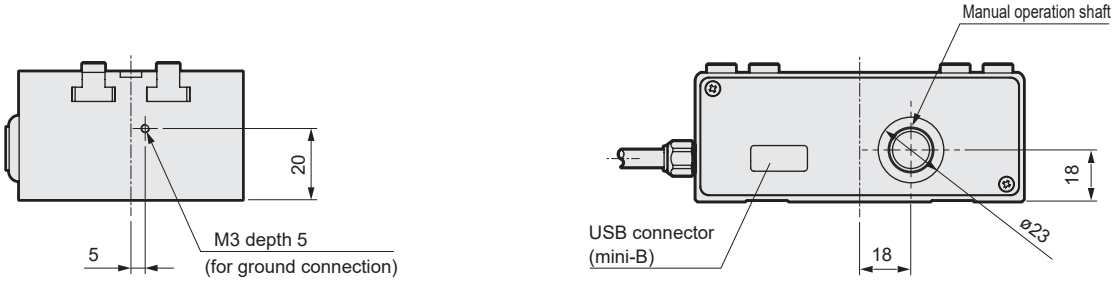
20
5
M3 depth 5
(for ground connection)
B arrow view
Manual operation shaft
18
USB connector
(mini-B)
18
ø23
C arrow view

Electric Actuator 2-Finger Gripper High speed

FFLD-12H

□25L stepping motor

How to order

FFLD - 12 H 70 N C N 30 - LK S R 00

Ⓐ Ⓑ Ⓒ Ⓓ

Ⓐ Gripping force	
12	120N

Ⓑ Stroke	
70	140 mm (single side 70 mm)

Ⓒ Interface specification	
LK	IO-Link

Ⓓ Relay cable	
R00	Movable cable

Specifications

Motor		□25L stepping motor
Encoder-type		Incremental encoder
Drive method		Rack and pinion, worm gear
Controller		Built in
Stroke	mm	140 (70 per side)
Max. gripping force *1	N	120 (per side)
Open/close speed range	mm/s	1 to 30 (per side)
Gripping speed range *1	mm/s	1 to 5 (per side)
Repeatability *2	mm	±0.02
Positioning repeatability *3	mm	±0.05 (per side)
Lost motion	mm	0.4 or less (per side)
Static allowable moment	N·m	MP=45, MY=45, MR=45
Settings tool		Setting software (S-Tools)
External interface		IO-Link
Power supply voltage	Communication/control	24 VDC ±10%
	Power	24 VDC ±10%
Current consumption	Communication/control A	0.2 or less
	Power A	3.2 or less
Motor section max. instantaneous current	A	4.0
Power capacity		Max. 100 W
Insulation resistance		10 MΩ, 500 VDC
Withstand voltage		500 VAC for 1 minute
Operating ambient temperature, humidity		0 to 40 °C (no freezing) 35 to 80% RH (no condensation)
Storage ambient temperature, humidity		-10 to 50°C (no freezing) 35 to 80% RH (no condensation)
Atmosphere		No corrosive gas, explosive gas, or dust
Degree of protection		IP20
Weight	kg	1.7

*1 Gripping is done with pressing operation.
*2 Repeatability indicates variation when the same workpieces are gripped repeatedly with the same operating conditions.
*3 The variation of stopping position when positioning is repeatedly performed to the same point is shown.

Gripping force and pressing rate

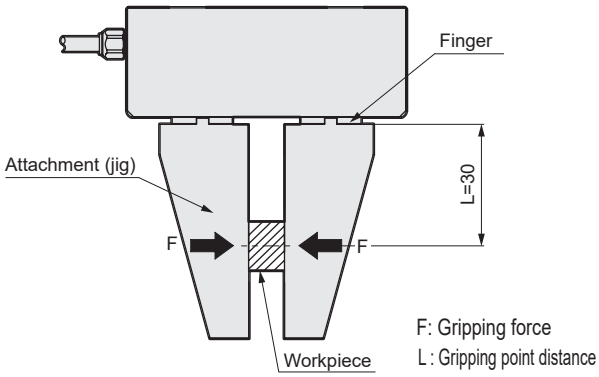

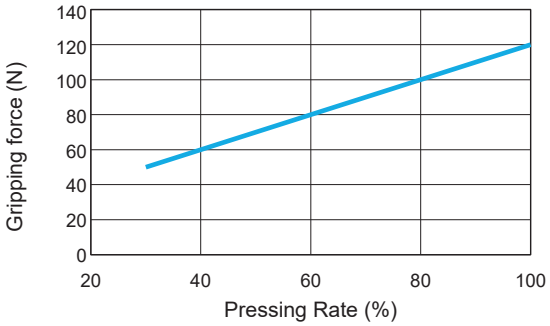

* The correlation diagram of the gripping force and pressing rate shows a guideline. Individual motor differences and variations in mechanical efficiency may result in differing actual values, even at the same pressing rate.
* Gripping speed is for 5mm/s. (L=30)
* The setting range for the pressing rate is 30 to 100%.

Dimensions

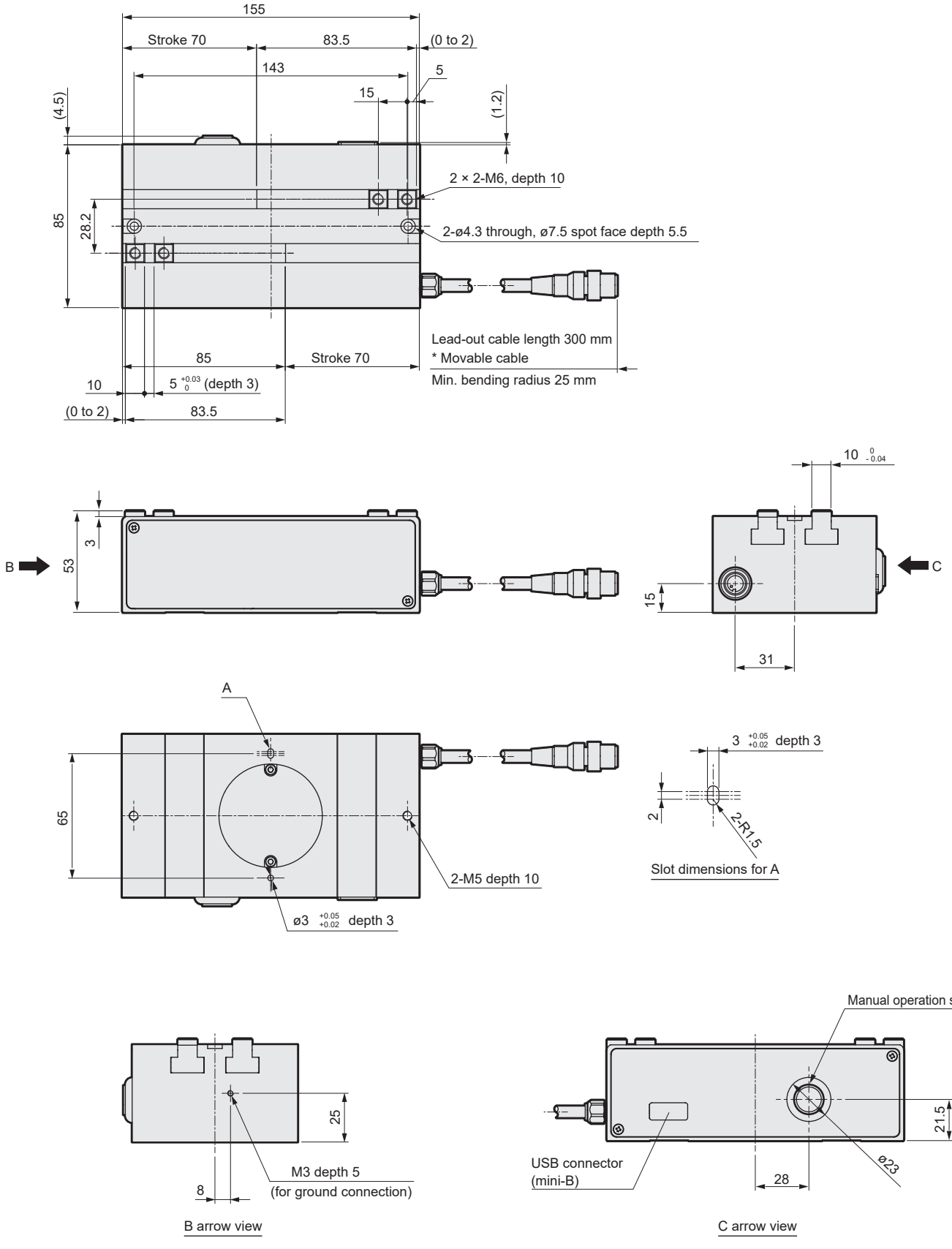
155
Stroke 70
83.5
(0 to 2)
143
5
15
(1.2)
(4.5)
85
28.2
2 × 2-M6, depth 10
2-ø4.3 through, ø7.5 spot face depth 5.5
Lead-out cable length 300 mm
* Movable cable
Min. bending radius 25 mm
85
Stroke 70
10
5 +0.03 0 (depth 3)
(0 to 2)
83.5
B
53
3
10 0 -0.04
C
15
31
A
65
2-M5 depth 10
ø3 +0.05 +0.02 depth 3
3 +0.05 +0.02 depth 3
2
2R1.5
Slot dimensions for A
25
M3 depth 5
(for ground connection)
8
B arrow view
Manual operation shaft
21.5
USB connector
(mini-B)
28
ø23
C arrow view

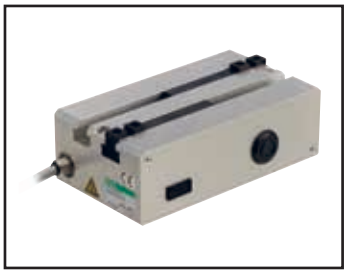

Electric actuator 2-finger Gripper high speed

FFLD-30H

□25L stepping motor

How to order

FFLD - 30 H 70 N C N 30 - LK S R00

Ⓐ Ⓑ Ⓒ Ⓓ

Ⓐ Gripping force	
30	300 N

Ⓑ Stroke	
70	140 mm (single side 70 mm)

Ⓒ Interface specification	
LK	IO-Link

Ⓓ Relay cable	
R00	Movable cable

Specifications

Motor		□25L stepping motor
Encoder-type		Incremental encoder
Drive method		Rack and pinion, worm gear
Controller		Built in
Stroke	mm	140 (70 per side)
Max. gripping force *1	N	300 (per side)
Open/close speed range	mm/s	1 to 30 (per side)
Gripping speed range *1	mm/s	1 to 5 (per side)
Repeatability *2	mm	±0.02
Positioning repeatability *3	mm	±0.05 (per side)
Lost motion	mm	0.4 or less (per side)
Static allowable moment	N·m	MP=45, MY=45, MR=45
Settings tool		Setting software (S-Tools)
External interface		IO-Link
Power supply voltage	Communication/control	24 VDC ±10%
	Power	24 VDC ±10%
Current consumption	Communication/control A	0.2 or less
	Power A	3.2 or less
Motor section max. instantaneous current	A	4.0
Power capacity		Max. 100 W
Insulation resistance		10 MΩ, 500 VDC
Withstand voltage		500 VAC for 1 minute
Operating ambient temperature, humidity		0 to 40 °C (no freezing) 35 to 80% RH (no condensation)
Storage ambient temperature, humidity		-10 to 50°C (no freezing) 35 to 80% RH (no condensation)
Atmosphere		No corrosive gas, explosive gas, or dust
Degree of protection		IP20
Weight	kg	1.7

*1 Gripping is done with pressing operation.
*2 Repeatability indicates variation when the same workpieces are gripped repeatedly with the same operating conditions.
*3 The variation of stopping position when positioning is repeatedly performed to the same point is shown.

Gripping force and pressing rate

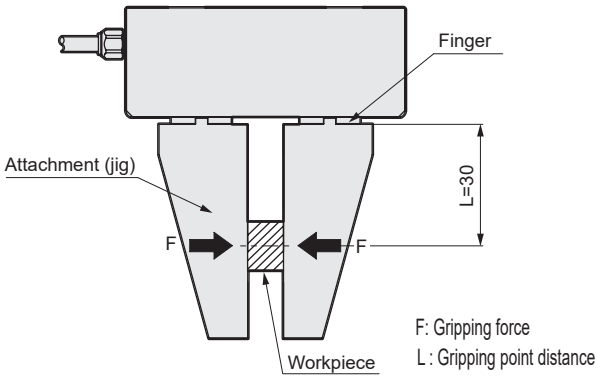

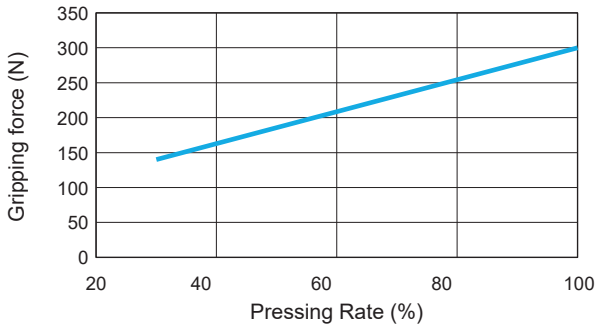

* The correlation diagram of the gripping force and pressing rate shows a guideline. Individual motor differences and variations in mechanical efficiency may result in differing actual values, even at the same pressing rate.
* Gripping speed is for 5mm/s. (L=30)
* The setting range for the pressing rate is 30 to 100%.

Dimensions

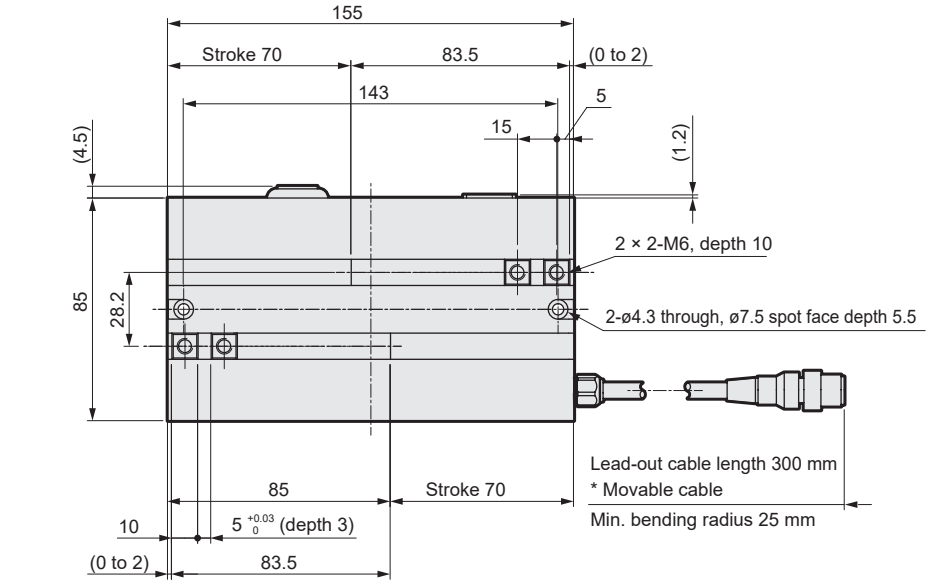

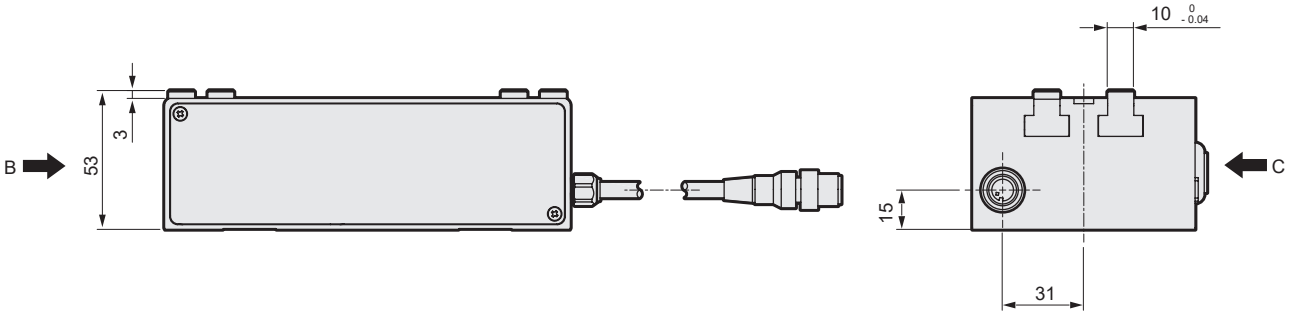

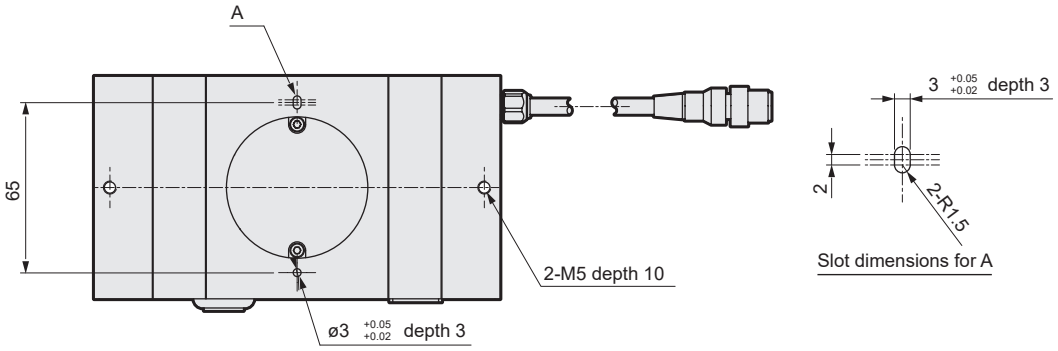

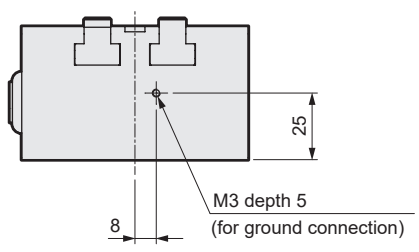

B arrow view

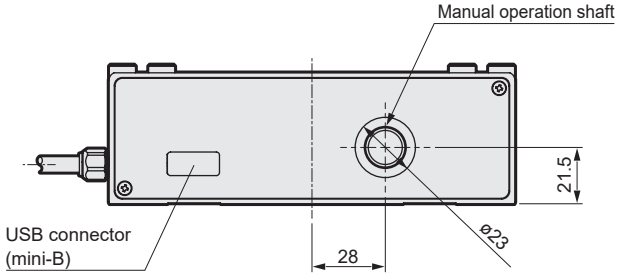

C arrow view

Electric actuator 2-Finger Gripper high speed

FFLD-50H

□35 Stepping motor

How to order

FFLD - 50 H 80 N C N 30- LK S R00

Ⓐ Ⓑ Ⓒ Ⓓ

ⒶGripping force

50	500 N

ⒷStroke

80	160 mm (single side 80 mm)

ⒸInterface specification

LK	IO-Link

ⒹRelay cable

R00	Movable cable

Specifications

Motor		□35 Stepping motor
Encoder-type		Incremental encoder
Drive method		Rack and pinion, worm gear
Controller		Built in
Stroke	mm	160 (80 per side)
Max. gripping force *1	N	500 (per side)
Open/close speed range	mm/s	1 to 30 (per side)
Gripping speed range *1	mm/s	1 to 5 (per side)
Repeatability *2	mm	±0.02
Positioning repeatability *3	mm	±0.05 (per side)
Lost motion	mm	0.4 or less (per side)
Static allowable moment	N·m	MP=64, MY=55, MR=64
Settings tool		Setting software (S-Tools)
External interface		IO-Link
Power supply voltage	Communication/control	24 VDC ±10%
	Power	24 VDC ±10%
Current consumption	Communication/control A	0.2 or less
	Power A	3.0 or less
Motor section max. instantaneous current	A	4
Power capacity		Max. 100 W
Insulation resistance		10 MΩ, 500 VDC
Withstand voltage		500 VAC for 1 minute
Operating ambient temperature, humidity		0 to 40 °C (no freezing) 35 to 80% RH (no condensation)
Storage ambient temperature, humidity		-10 to 50°C (no freezing) 35 to 80% RH (no condensation)
Atmosphere		No corrosive gas, explosive gas, or dust
Degree of protection		IP20
Weight	kg	2.7

*1 Gripping is done with pressing operation.
*2 Repeatability indicates variation when the same workpieces are gripped repeatedly with the same operating conditions.
*3 The variation of stopping position when positioning is repeatedly performed to the same point is shown.

Gripping force and pressing rate

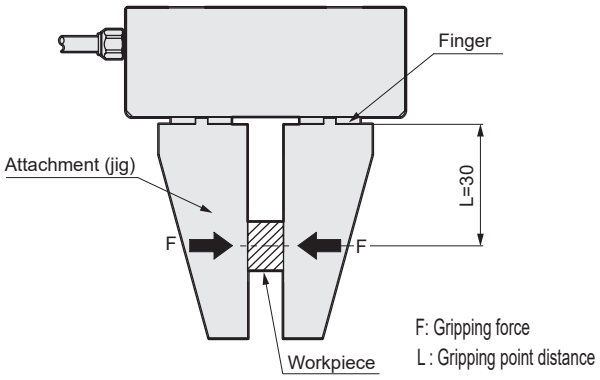

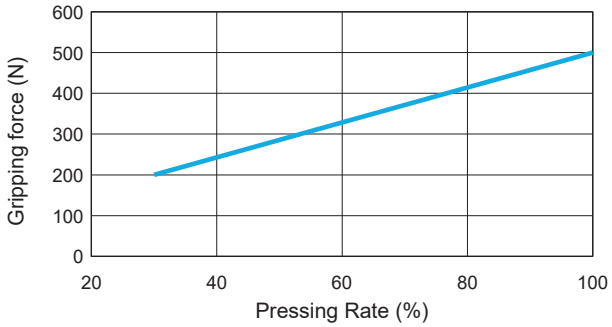

* The correlation diagram of the gripping force and pressing rate shows a guideline. Individual motor differences and variations in mechanical efficiency may result in differing actual values, even at the same pressing rate.
* Gripping speed is for 5mm/s. (L=30)
* The setting range for the pressing rate is 30 to 100%.

Dimensions

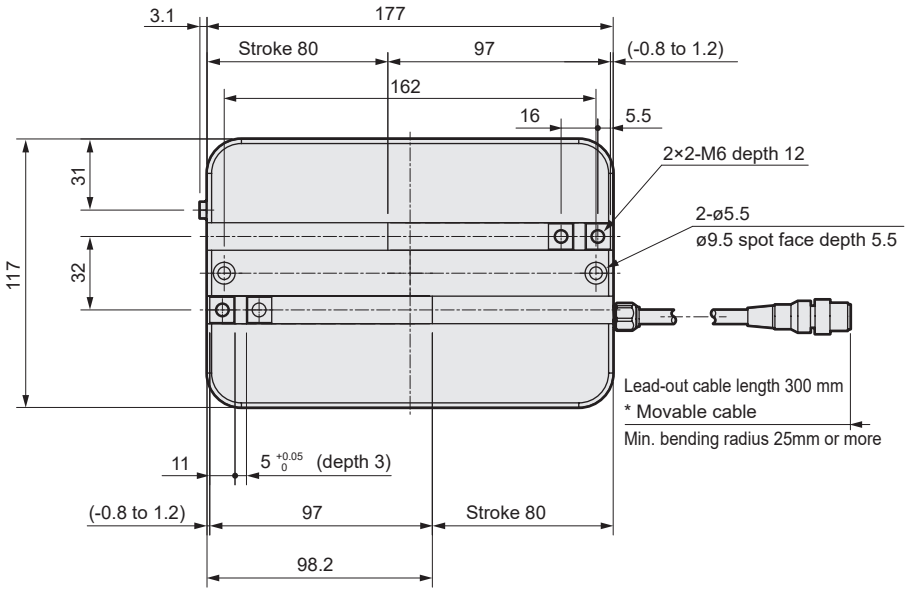

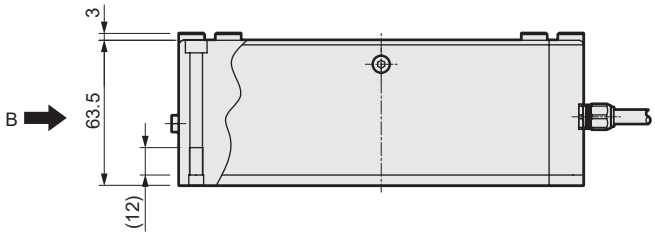

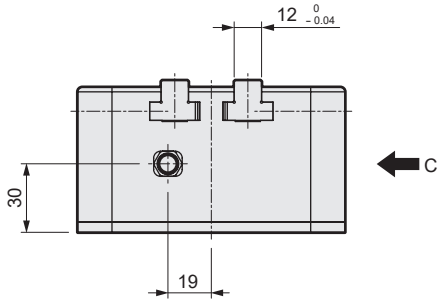

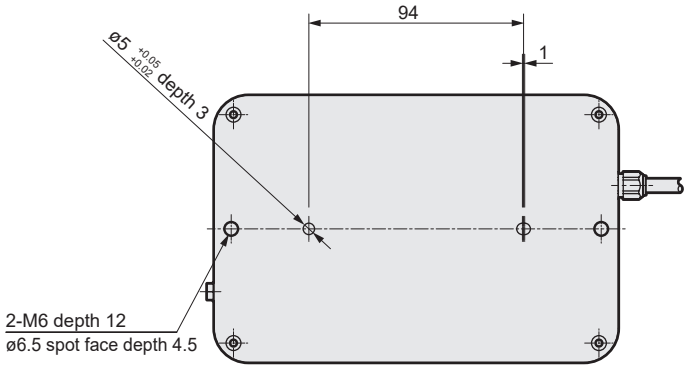

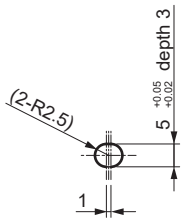

Slot dimensions for A

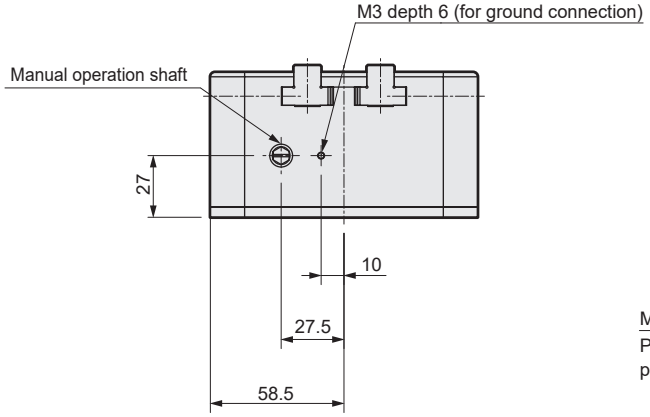

B arrow view

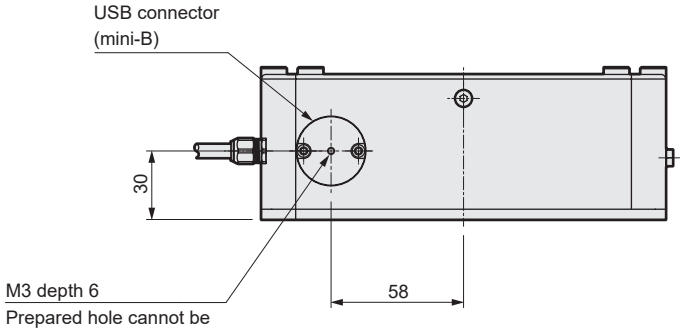

C arrow view

System configuration

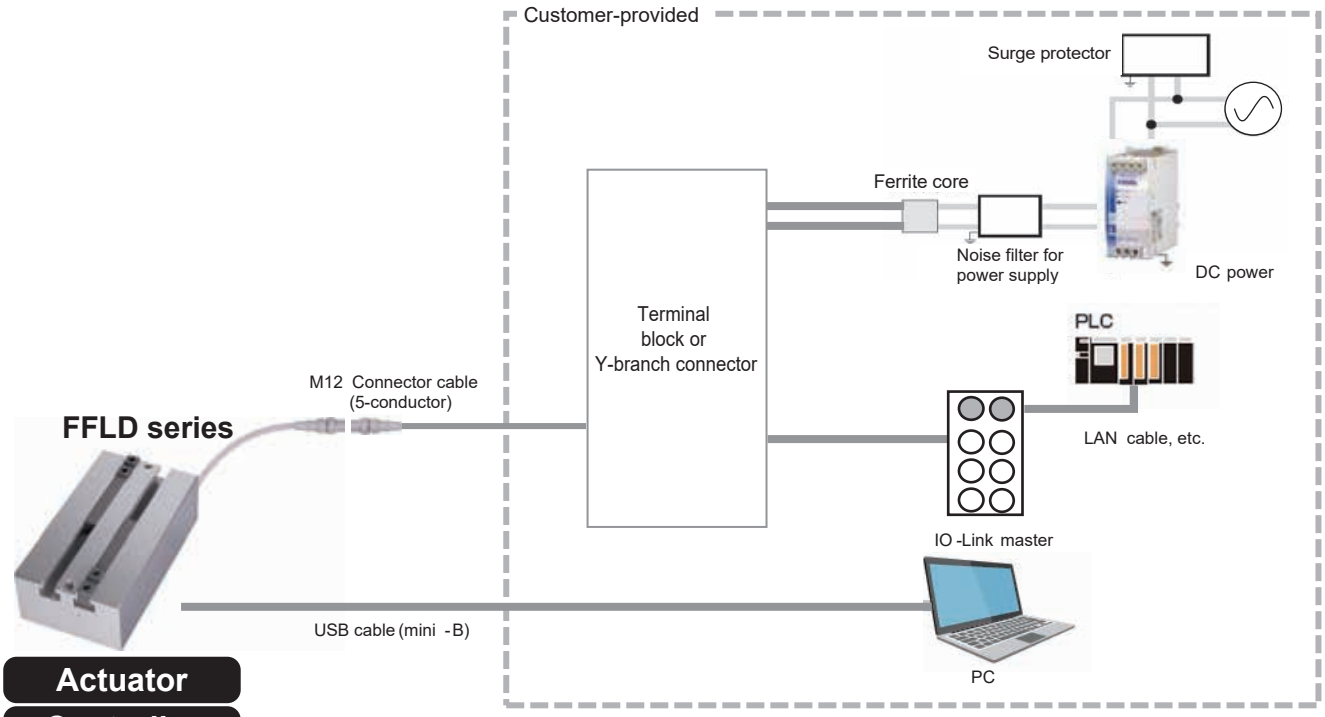

Actuator
Controller

PC setting software (free of charge)
Download from the CKD website.
(URL:https://www.ckd.co.jp/en/)

Connection diagram

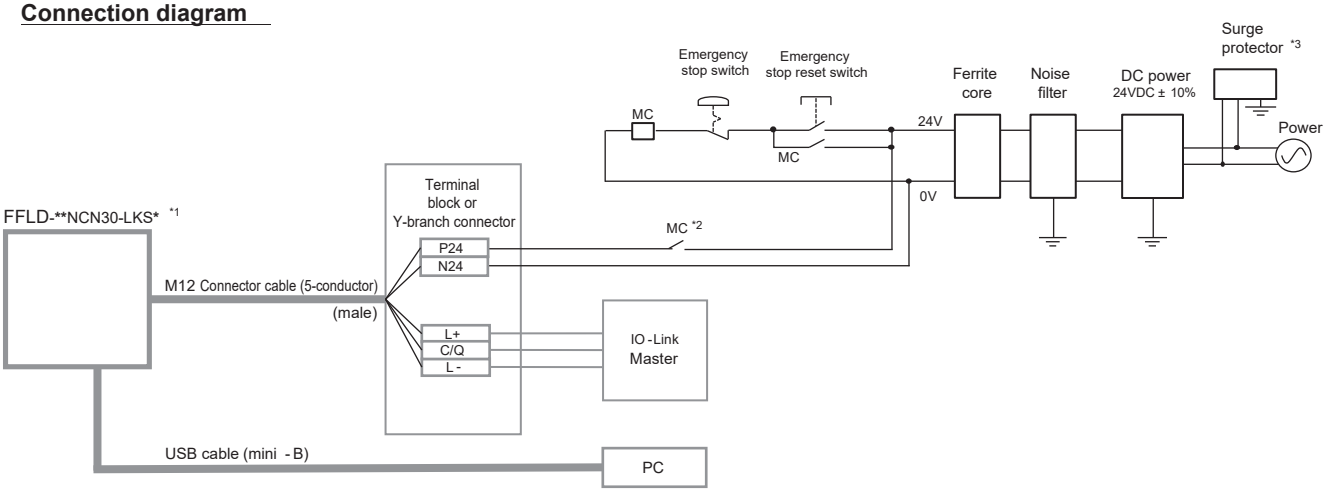

*1 It is not a IO-Link ClassB-compliant product. It is possible to connect to the IO-Link Class B master, however, communication/control and motor power supplies are isolated, so other equipment may be affected if an error occurs. Refer to the instruction manual before wiring. Incorrect wiring could result in part damage.
*2 If the motor drive source must be shut off for safety category compliance, etc., connect a contact such as an electromagnetic switch.
*3 A surge protector is required to comply with the CE marking.

● Y branch connector

EA-YJOINT-1

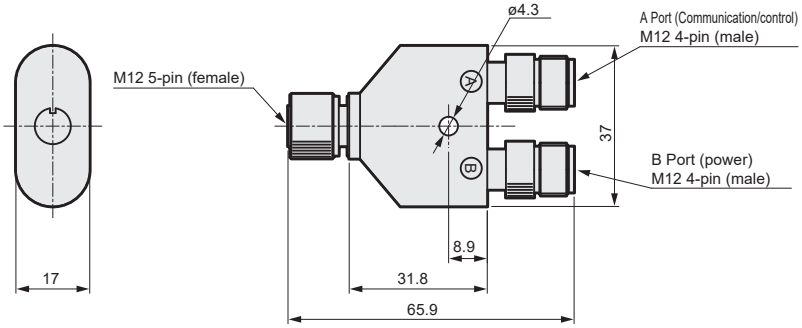

Refer to the Instruction Manual for the wiring diagram.

Field Network Description

Overview	
FDP	64 point operation is possible. Switching the direct travel selection signal enables full direct value operation with which the operating conditions can be set to a desired value from the PLC. Monitoring can also be confirmed. Refer to the table below for details.

	Direct value travel selection	Positioning point count	Direct value travel Item									Monitor Item		
			Target position	Speed	Pressing rate	Pressing speed	Position specification method	Operation mode	Stop method	Point zone +	Point Zone -	Position	Current	Speed
FDP	0	64 points	-	-	-	-	-	-	-	-	-	○	▲	▲
	1	No limit	○	○	○	○	○	○	○	○	○	○	▲	▲

*For ▲, use ▲ to select only 1 item to be monitored -: N/A, ○: Yes, ▲: Conditional

[Communication specifications]

Item	Specifications
Communication protocol version	V1.1
Transmission bit rate	COM2 (38.4kbps)
Port	Class A
Process data length (Input) PD (in) data length	5 byte
Process data length (Output) PD (out) data length	15 byte
Minimum cycle time	10ms
Monitor function	Position, current, speed

Cyclic data from master

PD (out)	Bit	Item
0	7	-
	6	Stop
	5	Alarm reset
	4	Servo ON
	3	Origin return start
	2	Travel start
	1	Direct value travel selection
	0	-
1	7	-
	6	-
	5	Point number confirmation bit 5
	4	Point number confirmation bit 4
	3	Point number confirmation bit 3
	2	Point number confirmation bit 2
	1	Point number confirmation bit 1
	0	Point number confirmation bit 0
2 to 3	7 to 0	Position (direct value travel)
4	7 to 0	Speed (direct value travel)
5	7 to 0	Pressing ratio (direct value travel)
6 to 7	7 to 0	Pressing distance (direct value travel)
8	7 to 0	Pressing speed (direct value travel)
9	7	Position specification method (direct value travel)
	6 to 5	Operation method (direct value travel)
	4 to 3	-
	2 to 0	Stop method (direct value travel)
10 to 11	7 to 0	Point zone(+) (direct value travel)
12 to 13	7 to 0	Point zone (-) (direct value travel)
14	7	INCH selection
	6	JOG/INCH(+)Travel start
	5	JOG/INCH (-) travel start
	4 to 3	-
	2 to 0	Monitor selection

Cyclic data from controller

PD (in)	Bit	Item
0	7	Operation preparation complete
	6	Warning
	5	Alarm
	4	Servo ON state
	3	Origin return complete
	2	Travel complete
	1	Moving
	0	Point zone
1	7	Direct value travel status
	6	-
	5	Point number confirmation bit 5
	4	Point number confirmation bit 4
	3	Point number confirmation bit 3
	2	Point number confirmation bit 2
	1	Point number confirmation bit 1
	0	Point number confirmation bit 0
2 to 3	7 to 0	Current position
4	7 to 0	Selection monitor