CKD

Electric Actuator

FLSH Series

INSTRUCTION MANUAL

SM-A14266-A/3



- Read this Instruction Manual before using the product.
- Read the safety notes carefully.
- Keep this Instruction Manual in a safe and convenient place for future reference.

CKD Corporation

PREFACE

Thank you for purchasing CKD's **"FLSH Series" electric actuator**. This Instruction Manual contains basic matters such as installation and usage instructions in order to ensure optimal performance of the product. Please read this Instruction Manual thoroughly and use the product properly.
Keep this Instruction Manual in a safe place and be careful not to lose it.

Product specifications and appearances presented in this Instruction Manual are subject to change without notice.

- The product is intended for users who have basic knowledge of materials, wiring, electricity, and mechanisms. CKD shall not be responsible for accidents caused by persons who selected or used the product without knowledge or sufficient training.
- Since there are a wide variety of customer applications, it is impossible for CKD to be aware of all of them. Depending on the application or usage, the product may not be able to exercise its full performance or an accident may occur due to fluid, wiring, or other conditions. It is the responsibility of the customer to check the product specifications and decide how the product shall be used in accordance with the application and usage.

SAFETY INFORMATION

When designing and manufacturing any device incorporating the product, the manufacturer has an obligation to ensure that the device is safe. To that end, make sure that the safety of the machine mechanism of the device and the electric system that controls such mechanism is ensured.

In order to use our products safely, it is important to select, use, handle, and maintain the products properly.
Observe the warnings and precautions described in this Instruction Manual to ensure device safety.

Although various safety measures have been adopted in the product, customer's improper handling may lead to an accident. To avoid this:

Thoroughly read and understand this Instruction Manual before using the product.

To explicitly indicate the severity and likelihood of a potential harm or damage, precautions are classified into three categories: "DANGER", "WARNING", and "CAUTION".

⚠ **DANGER**	Indicates an imminent hazard. Improper handling will cause death or serious injury to people.
⚠ **WARNING**	Indicates a potential hazard. Improper handling may cause death or serious injury to people.
⚠ **CAUTION**	Indicates a potential hazard. Improper handling may cause injury to people or damage to property.

Precautions classified as "CAUTION" may still lead to serious results depending on the situation.
All precautions are equally important and must be observed.

Other general precautions and tips on using the product are indicated by the following icon.

	Indicates general precautions and tips on using the product.

Precautions on Product Use

⚠DANGER

Do not use the product for the following applications:

- Medical equipment pertaining to sustainment and management of human life and body
- Mechanism and mechanical device for transferring and transporting people
- Critical parts for securing safety in a mechanical device

⚠WARNING

Use the product within the specifications.

Precautions on Product Disposal

⚠CAUTION

When disposing of the product, comply with laws pertaining to disposal and cleaning of wastes and have an industrial waste disposal company dispose of the product.

CONTENTS

PREFACE ..... **i**
SAFETY INFORMATION ..... **ii**
Precautions on Product Use iii
Precautions on Product Disposal iii
CONTENTS ..... **iv**
1. PRODUCT OVERVIEW **1**
1.1 System Structure 1
1.2 Instruction Manuals Related to This Product 2
1.3 Part Name 2
1.4 Model Number Indication 3
1.4.1 FLSH Series 3
1.4.2 Motor cable (fixed/movable) 5
1.4.3 Encoder cable as single unit (fixed/movable) 5
1.5 Specifications 6
2. INSTALLATION **7**
2.1 Environment 12
2.2 Unpacking 12
2.2.1 Parts of the product 12
2.3 Installing 13
2.3.1 Body 13
2.3.2 Finger 14
3. USAGE **15**
3.1 Safety Instructions 15
3.2 Using the Controller 18
3.3 Manual Operation 18
4. MAINTENANCE AND INSPECTION **19**
4.1 Periodic Inspection 20
4.1.1 Inspection item 20
5. TROUBLESHOOTING **21**
5.1 Items to Check When a Problem Occurs 21
5.2 Problems, Causes, and Solutions 22
6. WARRANTY PROVISIONS **24**
6.1 Warranty Conditions 24
6.2 Warranty Period 24
6.3 Remarks 24

1. PRODUCT OVERVIEW

1.1 System Structure

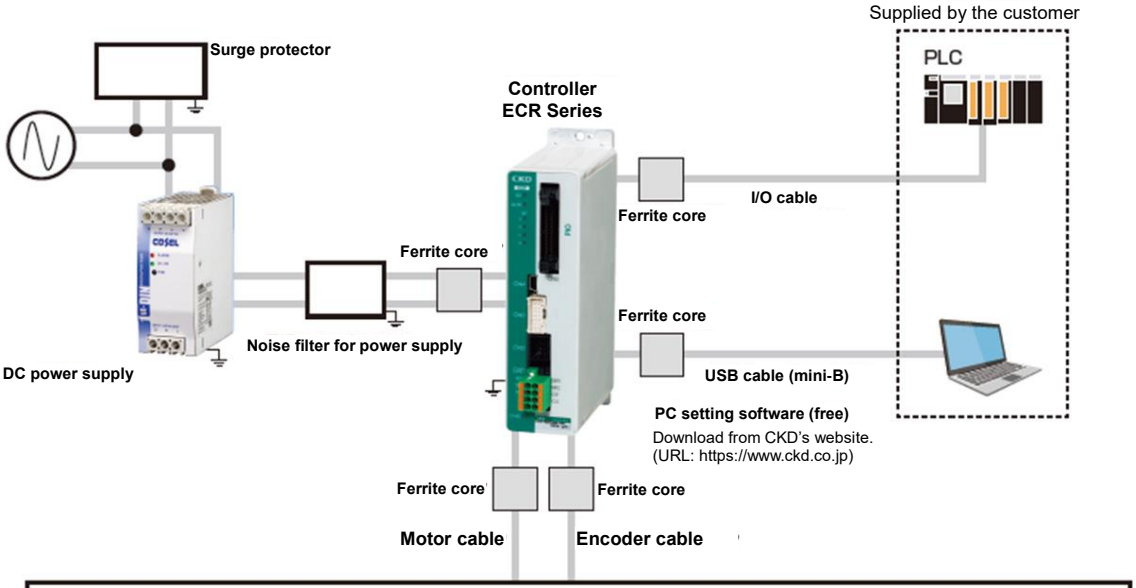

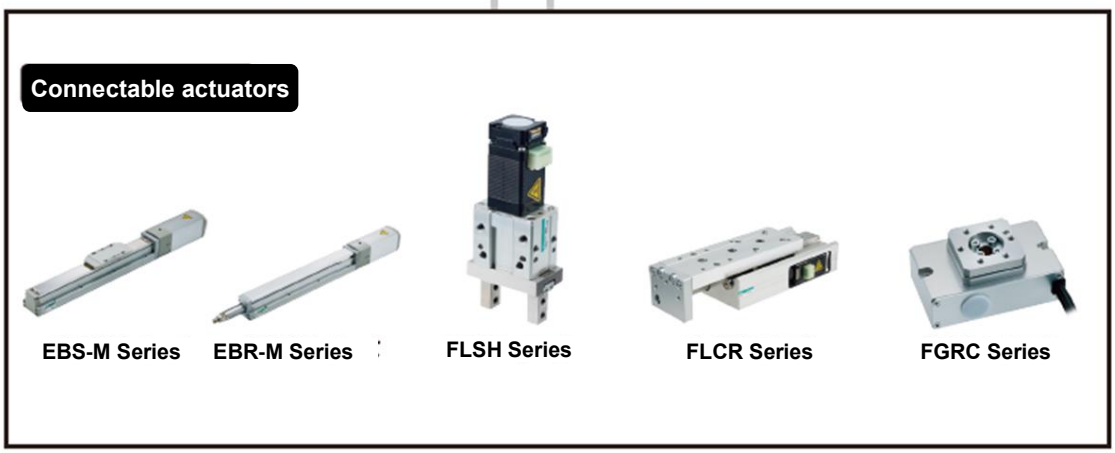

The components in the system structure that can be purchased from CKD are listed below.

Item	Part name	Product name/Model no.
Components	Controller	ECR Series
	Actuator	FLSH Series
	Motor cable	EA-CBLM1-*
	Encoder cable	EA-CBLE1-*
	I/O cable	EA-CBNLP1-*
	24 VDC power supply	EA-PWR-KHNA240F-24
	48 VDC power supply	EA-PWR-KHNA480F-48
	Surge protector	AX-NSF-RAV-781BXZ-4
	Noise filter	AX-NSF-NF2015A-OD
	Ferrite core (7 pieces)	EA-NSF-FC01-SET
Provided for free	Software for Windows	S-Tools

1.2 Instruction Manuals Related to This Product

For the instruction manuals for controllers and setting tools related to this product, refer to the following.

Part name	No.
Electric actuator ECR (controller)	SM-A10615
Electric actuator ECR (controller) - IO-Link specification	SM-A10616
Electric actuator ECR (controller) - CC-Link specification	SM-A10617
Electric actuator ECR (controller) - EtherCAT specification	SM-A10618
PC Setting Software for Electric Actuators S-Tools	SM-A11147

1.3 Part Name

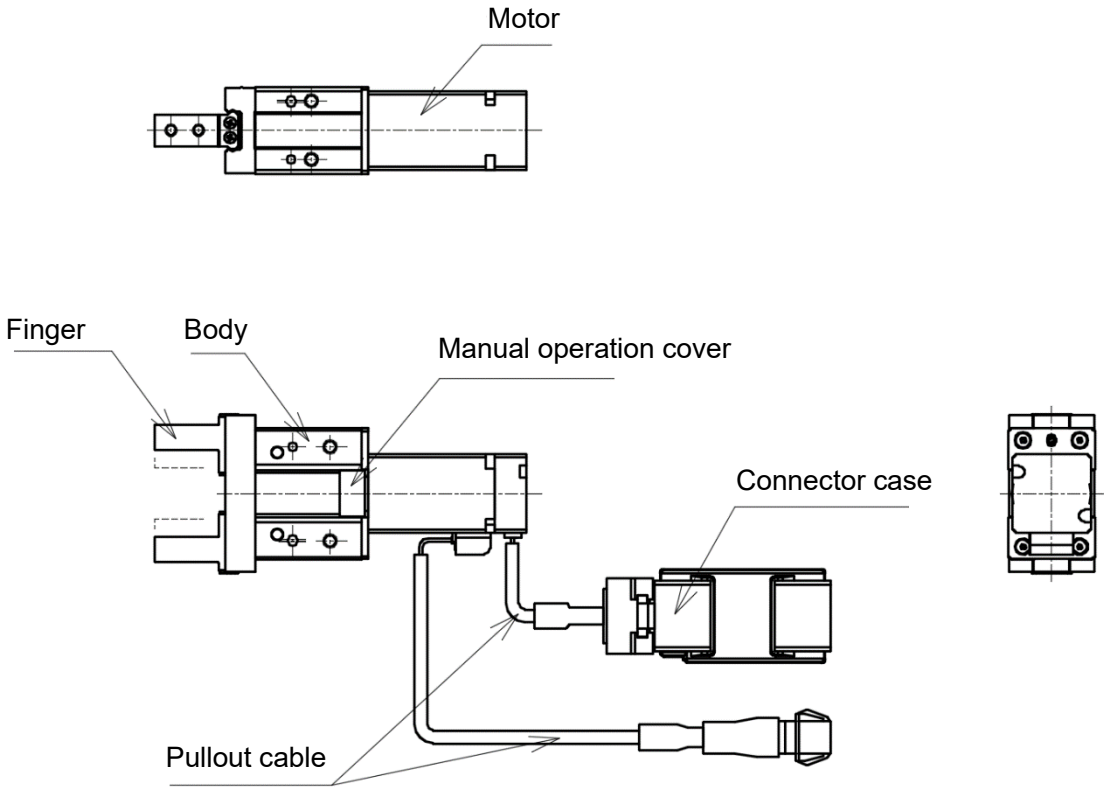

1.4 Model Number Indication

1.4.1 FLSH Series

FLSH - 16 [ ] H1 06 N C N - F S03

Ⓐ Size
16

Ⓑ Applicable controller
Blank ECR

Ⓒ Screw lead
H1 1.5 mm

Ⓓ Stroke
06 6 mm (Single side 3 mm)

Ⓔ Rubber cover
N None

ⒻEncoder
C Incremental encoder

Ⓖ Finger
N Basic

Ⓗ Cable output type/direction *1

F	Direct outlet	Front
S	Direct outlet	Side

Ⓘ Relay cable

N00	None
S01	Fixing cable 1 m
S03	Fixing cable 3 m
S05	Fixing cable 5 m
S10	Fixing cable 10 m
R01	Movable cable 1 m
R03	Movable cable 3 m
R05	Movable cable 5 m
R10	Movable cable 10 m

*1 Refer to Figure 1.

[Fig.1]

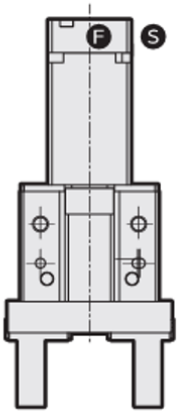

FLSH - 20 [ ] H1 10 N C N - F S03

Ⓐ Size
20

Ⓑ Applicable controller
Blank ECR

Ⓒ Screw lead
H1 1.5 mm

Ⓓ Stroke
10 10 mm (5 mm on one side)

Ⓔ Rubber cover
N None

ⒻEncoder
C Incremental encoder

Ⓖ Finger
N Basic

Ⓗ Cable output type/direction *1

F	Direct outlet	Front
S	Direct outlet	Side

Ⓘ Relay cable

N00	None
S01	Fixing cable 1 m
S03	Fixing cable 3 m
S05	Fixing cable 5 m
S10	Fixing cable 10 m
R01	Movable cable 1 m
R03	Movable cable 3 m
R05	Movable cable 5 m
R10	Movable cable 10 m

*1 Refer to Figure 1.

[Fig.1]

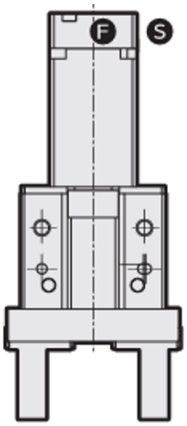

FLSH - 25 [ ] H1 14 N C N - F S03

Ⓐ Size
25

Ⓑ Applicable controller
Blank ECR

Ⓒ Screw lead
H1 1.5 mm

Ⓓ Stroke
14 14 mm(Single side 7 mm)

Ⓔ Rubber cover
N None

ⓕ Encoder
C Incremental encoder

Ⓖ Finger
N Basic

Ⓗ Cable output type/direction *1
F Direct outlet Front
S Direct outlet Side

Ⓘ Relay cable
N00 None
S01 Fixing cable 1 m
S03 Fixing cable 3 m
S05 Fixing cable 5 m
S10 Fixing cable 10 m
R01 Movable cable 1 m
R03 Movable cable 3 m
R05 Movable cable 5 m
R10 Movable cable 10 m

*1 Refer to Figure 1.

[Fig.1]

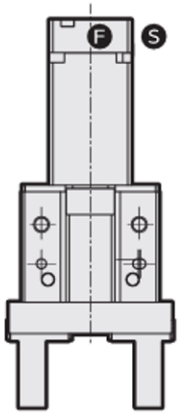

1.4.2 Motor cable (fixed/movable)

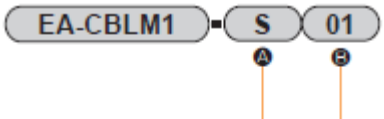

Ⓐ Cable type	
S	Fixed cable
R	Movable cable

Ⓑ Cable length	
01	1 m
03	3 m
05	5 m
10	10 m

1.4.3 Encoder cable as single unit (fixed/movable)



Ⓐ Cable type	
S	Fixed cable
R	Movable cable

Ⓑ Cable length	
01	1 m
03	3 m
05	5 m
10	10 m

1.5 Specifications

		FLSH-16	FLSH-20	FLSH-25
Motor		Stepping motor		
Encoder type		Incremental encoder		
Drive method		Sliding screw		
Motor size	mm	□20	□25	□25L
Screw lead	mm	1.5		
Stroke length	mm	6 (each finger 3)	10 (each finger 5)	14 (each finger 7)
Opening/closing speed	mm/s	5 to 50 (each finger)		
Acceleration/Deceleration range	G	0.1 to 0.3		
Gripping speed range *1	mm/s	5 to 15 (each finger)		
Repeatability *2	mm	±0.02		
Positioning repeatability *3	mm	±0.05 (each finger)		
Lost motion	mm	0.3 or less (each finger)		
Static allowable moment	N·m	MP=0.68, MY=0.68, MR=1.36	MP=1.32, MY=1.32, MR=2.65	MP=1.94, MY=1.94, MR=3.88
Max. gripping power *1	N	20 (each finger)	42 (each finger)	65 (each finger)
Weight	g	250	380	580
Motor power supply voltage		48 VDC / 24 V ± 10%		
Insulation resistance		10 MΩ, 500 VDC		
Withstand voltage		500 VAC, 1 minute		
Operating ambient temperature		0°C to 40°C (no freezing)		
Operating ambient humidity		35% to 80% (no condensation)		
Storage ambient temperature		-10°C to 50°C (no freezing)		
Storage ambient humidity		35% to 80% (no condensation)		
Atmosphere		No corrosive gas, explosive gas, and dust		
Degree of protection		Equivalent to IP40 (IEC standard)		

*1 Gripping is done with pressing operation

*2 Reapeatability indicates variation when the same workpiece is repeatedly gripped at the same power, under same operation conditions

*3 The stop position will vary if positioning is repeatedly performed to the same point

2. INSTALLATION

⚠DANGER

Do not use the product in a place where dangerous substances such as ignitable, inflammable, or explosive materials are present.
Ignition, inflammation, or explosion may occur.

Prevent water and oil from splashing onto the product.
A fire, electric leakage, or failure may occur. Even oil drops and oil mists are prohibited.

Make sure to hold and secure the product (including the workpiece) while installing the product.
An injury may occur if the product falls down, falls off, or operates abnormally.

Use a DC stabilized power supply (24 VDC ± 10% or 48 VDC ± 10%) with sufficient capacity as a power supply for the controller and the input/output circuit.
If the product is directly connected to an AC power supply, a fire, burst or damage may occur.

Do not work with wet hands.
An electric shock may occur.

Install overcurrent protective equipment (such as a breaker for wiring and a circuit protector) on the primary side of the power supply when wiring in accordance with "JIS B 9960-1:2008 Safety of machinery - Electrical equipment of machines - Part 1: General requirements".

> Description from "7.2.1 General" of JIS B 9960-1:2008:
> Overcurrent protection shall be provided where the current in a machine (equipment) circuit can exceed either the rating of any component or the currenty carrying capacity of the conductors, whichever is the lesser value. The ratings or settings to be selected are detailed in 7.2.10.

⚠ WARNING

Do not install the product to a combustible material.
If the product is installed directly to or near a combustible material, a fire may result.

If the system is such that the machine stops in the event of a system failure such as an emergency stop or a power failure, design and implement a safety circuit or a safety device to prevent damages to the devices and injuries to people.

Install a safety fence to prevent entry into the actuator movable range.

Perform class D grounding (ground resistance: 100 Ω or less) for the product.
An electric leakage may occur and cause an electric shock or malfunction.

When wiring the product, refer to this Instruction Manual or any other relevant instruction manuals to make sure that the connectors are firmly connected and the wires are properly insulated.
Make sure that the wires do not contact other circuits and there is no ground fault and insulation failure between terminals. Otherwise, an overcurrent may flow into the product and cause damage. This may result in an abnormal operation or fire.

Insulate unused wires.
A malfunction, failure, or electric shock may occur.

Do not damage or pinch the cables, apply unnecessary stress to the cables, or place heavy objects on the cables.
A conduction failure or electric shock may occur.

Do not connect the communication connector of the product to other devices.
A malfunction or damage may occur.

Make sure to install the emergency stop button in a location where operation is easy.
Adopt a structure and wiring system that inhibit any automatic resetting of emergency stop button, and that prevent a person from accidentally resetting the emergency stop button.
When an emergency stop is executed, it may take several seconds until the machine has actually stopped, depending on the transfer speed and carrying load.

Install the product indoors and in a dry place.
In a place where water can splash onto the product or where humidity is high (80% or more and with condensation), an electric leakage or fire accident may occur.

Do not use or store the product in an environment where there is strong electromagnetic waves, ultraviolet rays, or radiation.
A malfunction or failure may occur.

Consider the possibility of power source failure.
Implement measures so as to prevent injuries to people and damages to devices even if a failure occurs with the power source.

Consider the possibility of motor failure.

Consider the operating state when restarting the product after an emergency stop or an irregular stop.

When there is a need for resetting the actuator to the starting position, design a safe control unit.

Because precision instruments are integrated, do not lay the product sideways or subject the product to vibration or impact during transportation.
Component damage may occur.

Adopt a safety design in consideration of a gripping force reduction caused by a power failure.
The gripping force may be reduced by a power failure, resulting in a detaching of workpiece. Design and implement a safety device to prevent injuries to people and damages to mechanical devices.

⚠ CAUTION

Install the wiring so that no induction noise is applied.

- Avoid using the product in a place where a large current or strong magnetic field occurs.
- Do not pipe or wire the product in the same piping or wiring (with multi-conductor cables) as the power lines for other large motors.
- Do not pipe or wire the product in the same piping or wiring as the power supplies and wires for inverters used in robots. Frame ground the power supply and insert a filter into the output section.

Do not use the product in an environment where a strong magnetic field occurs.
A malfunction may occur.

Separate the power for the output section of the product from the power for inductive loads (such as a solenoid valve and a relay) that generate surge currents.
If the power is shared, a surge current will flow into the output section and cause damage.
If the power cannot be separated, connect the surge absorption elements in parallel directly to all the inductive loads.

Do not perform a withstand voltage test or an insulation resistance test in a device with the product installed.
A capacitor is connected between the circuit of the control board in the product and the metal body to prevent damages from static electricity. Therefore, performing the tests above will damage the product. If these tests are required for the device, remove the product beforehand.

Remove all the FG (frame ground) connections of the product before performing electric welding on the device to which the product is installed.
If electric welding is performed without removing the FG connections, the product may become damaged due to a welding current or excessive high voltage and surge voltage from welding.

Select a power that has sufficient capacity for the number of products installed.
If the capacity is not sufficient, a malfunction may occur.

Do not bend the fixed cable repeatedly.
If repetitive bending is unavoidable, use a movable cable.

Secure the movable cable so that it will not move easily.When fixing, use cables with a bending radius of 63 mm or more.

Do not move the pullout cable of the actuator.
Fix the connector to the same part with a cable clamp or the like to prevent it from moving. Use the lead cable with a bending radius of 40 mm or more.

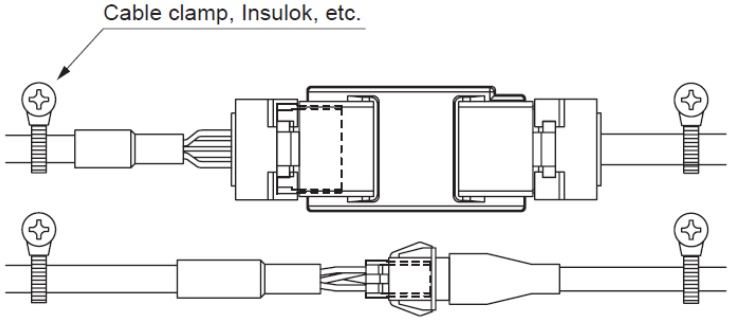

When installing an external stopper or a holding mechanism (such as a brake), place it at a position where it does not affect the detection of the origin position.
The origin position is detected when the power is turned on. If the detection is interfered by an external stopper or a holding mechanism, an unintended position may be recognized as the origin position.

Do not use the product in a place exposed to ultraviolet rays or in an atmosphere where corrosive gas and salt are present.
A performance degradation, abnormal operation, or strength deterioration due to rust formation may occur.

Do not install the product in a place subjected to strong vibrations or shocks.
If the product is subjected to strong vibrations or shocks, a malfunction may occur.

⚠ CAUTION

Do not use the product in a place where condensation occurs due to a sudden change in the ambient temperature.

The customer is responsible for checking the compatibility of the product with the customer's system, machinery, and device.

Connect only cables designed for the product.
A failure of the product or unexpected accident may occur.

Do not carry or install the product by holding its cable or the movable section.
An injury or cable disconnection may occur.

⚠ CAUTION

Secure sufficient space for maintenance and inspection.
Maintenance and inspection cannot be performed if sufficient space is not provided and this may cause equipment stoppage, failure, or injury.

When holding the product, hold its bottom surface.

When transporting and installing the product, ensure the safety of the workers by securely supporting the product using a lift or supporting gear and by assigning more than one worker.

Install the product in a way that it is not subjected to twisting or bending force.

Before adjusting the gain, firmly secure the actuator body to a rigid device and mount the jigs.

Do not hold the controller case tightly.

When using positioning holes, make sure to use pins having the size that does not require press-fitting.
If press-fitting sized pins are used, the press-fitting load may cause the guide section to become damaged or distortion may reduce accuracy. The recommended tolerance of the pin is JIS tolerance of 6 μm or less.

When operating the product while the power is not supplied, remove the workpiece by operating the manual operation plate to open/close the finger, or by removing the attachment. Also, do not apply any excess force to the manual operation plate.
A damage or operation fault may occur.

Prevent any excess load from being applied to the finger and attachment during the workpiece installation/removal as well as during transportation.
Scratches or dents may occur to the linear guide rolling surface of the finger, leading to an operation fault.

Do not put dents and scratches interfering with the flatness or perpendicularity of the body mounting surface and of the finger.

Except for the body securing screws and attachment securing screws, do not disassemble or retighten.
An operation fault may occur.

Select a model with a sufficient gripping force for the workpiece mass.

Select a model with a sufficient opening/closing width for the workpiece size.

The gripping position may become inconsistent due to the opening/closing width and workpiece variations. For the opening from gripping action, increase the stroke with an amount of backlash.

2.1 Environment

- Check the environment temperature and atmosphere before using and storing the product.
- Use the product at an ambient temperature between 0°C and 40°C. Ventilate if heat can become trapped.
- Use the product at an ambient humidity between 35% and 80%. Do not use the product in a place where condensation occurs.
- Install the product where it is not subjected to direct sunlight and away from a heating element. Also, avoid dust, corrosive gas, explosive gas, inflammable gas, and combustible material. Chemical resistance has not been considered for the product.
- Install the actuator on a smooth and flat surface.
- In order to avoid operation fault and damage, do not install the actuator on a surface with dents.
- The controller is set using setting software (S-Tools). Leave a space of 70 mm or more in front of the controller so that the connector of the connection cable of the PC can be connected and disconnected.

2.2 Unpacking



- When carrying and handling the product, use extreme care not to apply impact to the product (for example, do not drop the product).
- Do not carry heavy products alone.
- Place the product horizontally when not in use.
- Do not stand on the package.
- In order to prevent deforming the package, do not place heavy objects and objects of which their load concentrates.
- When taking the actuator out of the package, hold the actuator body.
- Do not apply unnecessary force to any part of the actuator.

- Check that the model number ordered and the model number indicated on the product are the same.
- Check the exterior of the product for any damage.

2.2.1 Parts of the product

Parts of the product	Quantity
Actuator	1
Motor cable	1
Encoder cable	1

2.3 Installing

2.3.1 Body

- Do not apply an excessive shock or moment to the body.
  A malfunction or damage may occur.
- The flatness of body mounting surface should be 0.02 mm or less. Do not apply twisting or bending force to the product.
  An operation fault or damage may occur.

- The body can be mounted from two different directions. Select the appropriate direction corresponding to the usage.
- For the length of a screw mounting the body and tightening torque, refer to the following table.

■ Front installation

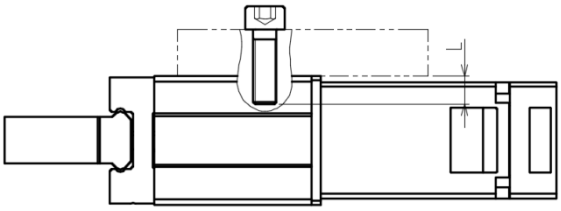

	Bolt	Tightening torque (N·m)	Max. screw-in depth L(mm)
FLSH-16	M4 × 0.7	2.1	8
FLSH-20	M5 × 0.8	4.3	8
FLSH-25	M6 × 1.0	4.3	10

■ Side installation

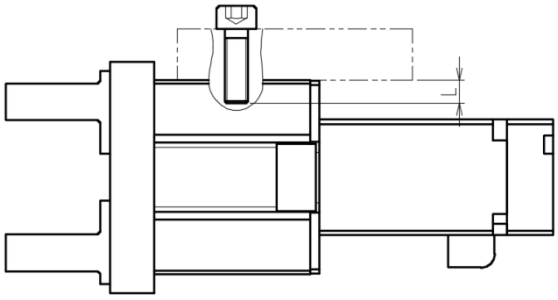

	Bolt	Tightening torque (N·m)	Max. screw-in depth L(mm)
FLSH-16	M4 × 0.7	1.6	4.5
FLSH-20	M5 × 0.8	3.3	8
FLSH-25	M6 × 1.0	5.9	10

■ Use of through hole

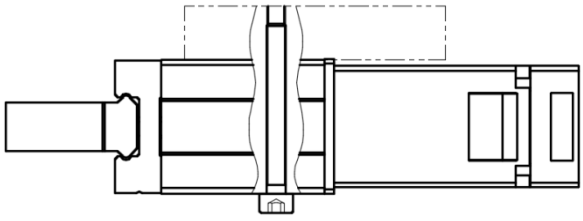

	Bolt	Tightening torque (N·m)
FLSH-16	M3 × 0.5	0.88
FLSH-20	M4 × 0.7	2.1
FLSH-25	M5 × 0.8	4.3

■ Allowable load

For details, refer to the "Selection guide" page in the catalog.

2.3.2 Finger

When mounting the attachment to the finger, take into consideration the effects exerted on the hand body and perform tightening while providing support using a tool such as a spanner so to prevent the finger from being distorted.
Damage may occur.

- When mounting the attachment to the finger, be careful not to apply lateral load to the finger.
- When mounting the attachment to the finger, observe the values below for the tightening torque.

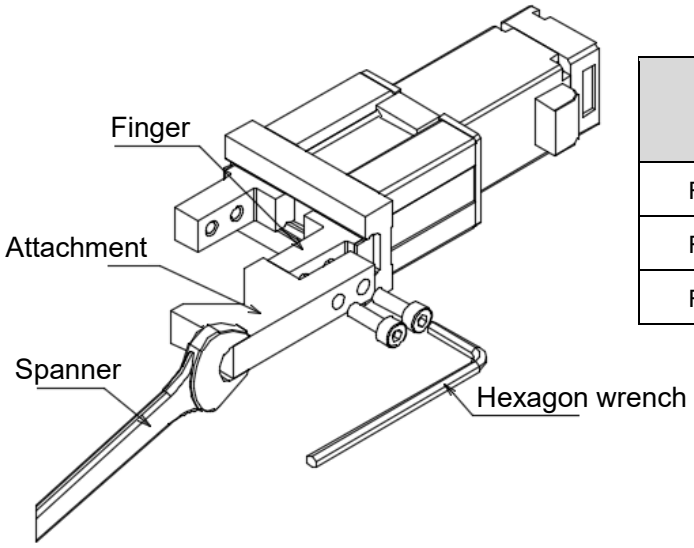

Item	Bolt	Tightening torque (N·m)
FLSH-16	M3 × 0.5	0.59
FLSH-20	M4 × 0.7	1.4
FLSH-25	M5 × 0.8	2.8

- Applying an excessive lateral load or any impactful load to the finger can cause backlash or damage. Make sure to use the product while keeping the external force exerted on the finger within the allowable load listed in the catalog.

3. USAGE

3.1 Safety Instructions

⚠DANGER

Do not enter the operating area of the device when the product is in an operational state.
The product may operate unexpectedly and an injury may occur.

Do not work with wet hands.
An electric shock may occur.

⚠WARNING

Before supplying electricity to the product, check that the operation area of the device is safe.
If electricity is supplied without checking safety, an electric shock or injury may occur.

Turn off the power immediately if the LED indicator on the controller does not blink even when the power is turned on.

Do not touch the product body during or immediately after operation.
A burn injury may occur.

Do not stand or put an object on the product.
A fall accident, injury due to the product falling down or off, or malfunction and runaway due to the product becoming damaged may occur.

Take measures to prevent damage to the human body and the device in case of power failures.
An unexpected accident may occur.

Before controlling the actuator from a position where it cannot be seen, check that it is safe for the actuator to operate.

Do not give commands that are smaller than the positioning repeatability.
The positioning control may not be performed properly.

When a power failure occurs, turn off the power to the controller.
The product can suddenly start moving when the power is restored and it can lead to an accident.

Before moving the movable section of the product manually, make sure that the servo is turned off.
When turning off the servo, an unexpected event (such as the movable section falling off) may occur. When switching the servo off, make sure that the safety measures are implemented to eliminate danger and operate with utmoset care to ensure safety

Do not apply a load that exceeds the allowable load specified in the “Selection guide” page in the catalog to the product.

⚠ CAUTION

Do not move the movable section of the product with external force and do not use the product in an application that requires the movable section to decelerate suddenly.
A malfunction or damage may occur due to regenerative currents.

Except when returning to the origin or pressing, do not allow to hit parts such as the stroke end.
The feed screw may become damaged due to impacts and an operation fault may occur.

Do not subject the product to external force when returning to the origin.
The origin may not be recognized correctly.

Do not put dents and scratches on the movable section.
An operation fault may occur.

Do not subject the movable section to impact.

Leave a margin for the transfer load since the product life changes depending on the transfer load and the environment.

If vibrations are generated, change the set speed and use the product at a speed that does not generate vibrations.
Depending on the conditions of use, vibrations may be generated during an operation even when the product is used within the operation speed range.

Provide the required gripping power with a sufficient margin to ensure operation.
The pressing force and the maximum current values given in “1.5 Specifications” are provided as a guide. Variation in the motor torque may cause errors even when the setting values are the same.

Do not turn off the servo while gravity or force of inertia is applied.
The workpiece may fall off if the servo is turned off. Turn off the servo in an equilibrium state where no gravity and force of inertia are applied or after safety is ensured.

Do not stop the product while it is accelerating or decelerating.
It may lead to a change in speed (acceleration) and cause a risk.

Do not insert fingers or an object into the opening of the product.
An injury or product damage may occur.

When replacing either the actuator or the controller in a combination, make sure to check the program and parameters before operating the product.
An unexpected operation may lead to an accident.

Do not turn the power on and off frequently.
Elements in the controller may become damaged.

Do not use a load that does not fall within the specified range.
If the load falls outside the range, an excessive uneven load applied to the guide section may cause rattling in the guide section, deteriorate accuracy, and adversely affect service life.

When operating the product without supplying power, make sure to use the manual operation plate.

When performing a positioning operation, take the backlash amount into consideration.
Because the finger position becomes displaced due to the backlash when the positioning operation is performed, the position needs to be set with the backlash amount taken into consideration.

When gripping by a pressing operation, adopt a setting of target position with an allowance given to the desired stop position (also consider the backlash amount).

When gripping the workpiece, make sure to perform the action by the pressing operation.
During a positioning operation and within the positioning range, do not bump the finger or the attachment into the workpiece. The feed screw may become jammed, and an operation fault may occur.

Set the operating torque for releasing the gripping larger than the pressing operation torque.
If the releasing torque is small, galling may occur and releasing may become impossible.

When force of inertia is applied due to transfer or rotation, perform a full stroke operation since the steel ball becomes offset and an increase in the sliding resistance and a reduction in the accuracy occur.
The limited trajectory guide is used for this finger.

The repeat accuracy expresses the displacement of finger stop position for when clamping and unclamping are repeated under the same condition (hand fixed, use of same attachment, see below).
Opening/closing shocks may cause a displacement of workpiece position and may worsen repeat accuracy. Moreover, attention is necessary because an accuracy deterioration can also be caused by wear and insufficient rigidity of attachment.

3.2 Using the Controller

- For how to use the controller and the setting tool (S-Tools), refer to the instruction manual for each product.
- For the instruction manual number, refer to “1.2 Instruction Manuals Related to This Product”.

3.3 Manual Operation

- Make sure that the servo is turned off before performing an operation.
  A malfunction or damage may occur.
- Do not apply excessive torque to the manual operation plate.
  An operation fault or damage may occur.
- The manual operation is mainly intended for use in starting, maintenance, and inspection.
  If used too often, an unexpected operation may result.

- Remove the manual operation cover and turn the manual operation plate.
- Right-hand turn: Finger opens.
- Left-hand turn: Finger closes.

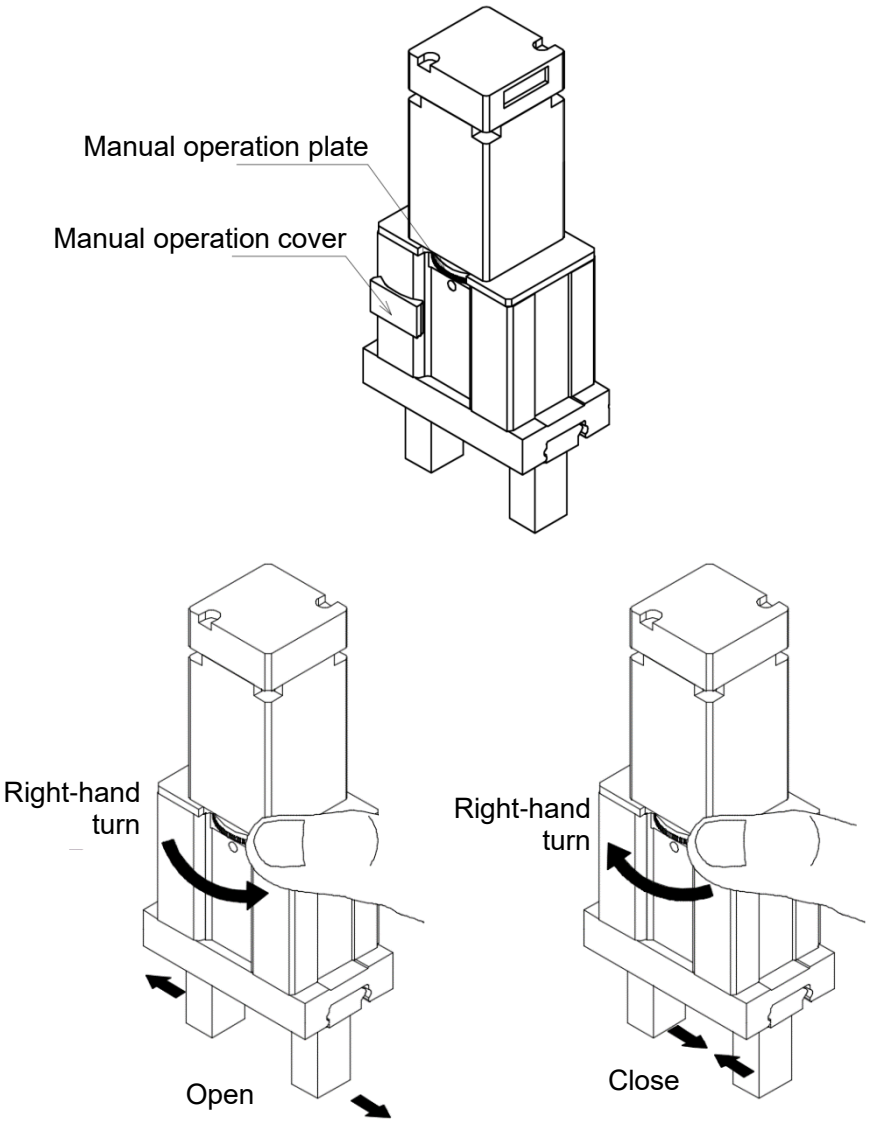

4. MAINTENANCE AND INSPECTION

⚠ WARNING

Install the product before wiring.
An electric shock may occur.

Do not work with wet hands.
An electric shock may occur.

Before performing wiring and inspection, wait five minutes or longer after turning off the power and check the voltage with a tester.
An electric shock may occur.

Do not attach or remove wires and connectors with the power turned on.
A malfunction, failure, or electric shock may occur.

Do not disassemble or modify the product.
An injury, accident, malfunction, or failure may occur.

⚠ CAUTION

Wiring and inspections must be performed by specialists.

For the lead wires used for the power cable, use wires with a sufficient diameter that can allow the instantaneous maximum current to flow.
A heat generation or damage may occur during operation.

Perform periodic inspections (two to three times a year) to confirm that the product operates properly.

Turn off the power immediately if abnormal heat, smoke, odor, sound, or vibration occurs in the product.
The product may become damaged or the continuous flow of currents may cause a fire.

Stop supplying power to the product before performing maintenance, inspection, and repair.
Take measures to prevent a third person from turning on the power unexpectedly.

4.1 Periodic Inspection

In order to use the product under optimum conditions, perform a periodic inspection two to three times a year.

4.1.1 Inspection item

Turn off the power before performing items 1, 2, and 3 below.

No.	Inspection item	Inspection method	Action
1	Check that the mounting bolts on the product, the screws on the terminal block, and the connectors are not loose.	Looseness check	Tighten the loose parts.
2	Check that there are no scratches and cracks on the cables.	Visual inspection	Replace the cable.
3	Check that foreign matters are not accumulating or are not stuck in the linear guide section.	Visual inspection	Clean the parts. Note 1
4	Check that there are no vibrations or abnormal sounds while the product is stopped or operated.	Noise inspection	Contact your nearest CKD sales office or distributor
5	Check that the power supply voltage is normal.	Tester	Check the power system and use the product within the power supply voltage range described in the Specifications.

Note 1: Use a soft cloth for cleaning and make sure not to leave foreign matters on the movable section.

5. TROUBLESHOOTING

5.1 Items to Check When a Problem Occurs

When a problem occurs, ensure safety and follow the procedure below.

1	Check the LED indicator on the controller. Green light: Motor energized (servo on) Green blinking: Motor de-energized (servo off) Red light: Unreleasable alarm issued Red blinking: Releasable alarm issued Off: Control power turned off
2	Check if there is an abnormality with the higher-level controller.
3	Check the voltage of the control power (24 VDC or 48 VDC).
4	Check the details of the alarm. The details of the alarm can be checked with the setting software (S-Tools).
5	Check the state of the I/O. The state of the I/O can be checked with the setting software (S-Tools).
6	Check that there is no disconnection or pinching of the cables and that they are connected correctly. Before checking the continuity, turn off the power and remove the cables to prevent an electric shock.
7	Check that measures (such as connecting the ground wire and attaching the surge suppressor) have been taken against noise.
8	Check the course of events and the operating conditions at the time the problem occurred.
9	Check the serial number of the product.

If the problem persists, refer also to “5.2 Problems, Causes, and Solutions”.

5.2 Problems, Causes, and Solutions

If the problem does not operate as intended, check the table below for a possible solution.

Problem	Cause	Solution
Even when power is turned on, LED indicator on controller does not light up.	Wiring is not correct.	Check the wiring to the power.
	Wiring is disconnected.	Check for pinching and disconnection of cables and check the connection of connectors and terminals.
	Product is malfunctioning or is damaged.	Repair or replace the product. Refer to "5.1 Items to Check When a Problem Occurs" and contact CKD.
LED indicator on controller remains lit in red.	Alarm has been issued.	Refer to the setting software (S-Tools) to find and remove the cause of the alarm.
	There is an abnormality in system.	Repair or replace the product. Refer to "5.1 Items to Check When a Problem Occurs" and contact CKD.
No operation standby completion signal is output.	Return to origin has not been performed.	Perform return to origin. (FLSH Series)
	Wiring for emergency stop signal is NO contact connection.	Change the wiring for emergency stop (EMG) to NC contact connection.
	Wiring is not correct.	Refer to Chapter 4 in “Controller Instruction Manual (SM-A10615)” and check the wiring.
Product does not operate as intended with PLC signal.	Input signal is unstable.	Input from the higher system may be causing chattering. Maintain the input signal for 20 ms or more.
	Return to origin cannot be completed or performed.	Transfer load may be too large. Check the Specifications.
	Setting of position, speed, acceleration, or pressing force is not correct.	Check the details of the point data.
	Setting of operation mode is not correct.	Check the setting of the "operation mode" in the parameter data.
	Wiring is not correct.	Refer to Chapter 4 in “Controller Instruction Manual (SM-A10615)” and check the wiring.
	Friction load is too large.	Check the friction load during transfer. Check that there is no jamming with the workpiece.
	Workpiece is in contact with an object on slider or rod.	Check how the device is assembled and set up.
	Internal resistance of product has increased.	Check the environment conditions and the conditions of use. Check how long the product has been in use (operation distance).
	Actuator body is damaged.	Repair or replace the product. Refer to "5.1 Items to Check When a Problem Occurs" and contact CKD.
Product itself vibrates.	Connection to actuator is loose.	Tighten the bolts.

Problem	Cause	Solution
Product cannot be operated with PLC.	Mode is set to TOOL mode.	Change the mode to the PLC mode using the setting software (S-Tools).
	Wiring is not correct.	Refer to Chapter 4 in “Controller Instruction Manual (SM-A10615)” and check the wiring.
	Wiring is disconnected.	Check for pinching and disconnection of cables and check the connection of connectors and terminals.
	Overload error occurs.	Check the transfer load and the speed.
	Power capacity is insufficient.	Check that the power capacity satisfies the required voltage and current.
Workpiece moves due to its own weight during an emergency stop.	Load exceeding holding force is applied.	Check whether an external force greater than the holding force is applied. Check the setting of the "Current during stop" in the parameter data.
Positioning completion output does not turn off.	Positioning completion output width is too large for movement distance.	Check the "Positioning width" in the point data.
Pressing operation cannot be performed.	(Mode) is not set to pressing operation.	Check the "Operation method" in the point data.
Device is out of step.	Load or speed has exceeded limit.	Check that the workpiece weight and the operation speed satisfy the specified values.
Product cannot achieve desired speed (it is very slow).	It is set to pressing operation instead of general transfer movement.	Check the "Operation method" in the point data. Perform a gain adjustment.
Overshoot occurs.	Both transfer weight and amount of deceleration are large.	Check that the workpiece weight and the operation speed satisfy the specified values. Perform a gain adjustment.

If you have any other questions or concerns, contact your nearest CKD sales office or distributor.

6. WARRANTY PROVISIONS

6.1 Warranty Conditions

■ Warranty coverage

If the product specified herein fails for reasons attributable to CKD within the warranty period specified below, CKD will promptly provide a replacement for the faulty product or a part thereof or repair the faulty product at one of CKD's facilities free of charge.
However, following failures are excluded from this warranty:

- Failure caused by handling or use of the product under conditions and in environments not conforming to those stated in the catalog, the Specifications, or this Instruction Manual.
- Failure caused by incorrect use such as careless handling or improper management.
- Failure not caused by the product.
- Failure caused by use not intended for the product.
- Failure caused by modifications/alterations or repairs not carried out by CKD.
- Failure that could have been avoided if the customer's machinery or device, into which the product is incorporated, had functions and structures generally provided in the industry.
- Failure caused by reasons unforeseen at the level of technology available at the time of delivery.
- Failure caused by acts of nature and disasters beyond control of CKD.

The warranty stated herein covers only the delivered product itself. Any loss or damage induced by failure of the delivered product is excluded from this warranty.

■ Confirmation of product compatibility

It is the responsibility of the customer to confirm compatibility of the product with any system, machinery, or device used by the customer.

■ Others

The terms and conditions of this warranty stipulate basic matters.
When the terms and conditions of the warranty described in individual specification drawings or the Specifications are different from those of this warranty, the specification drawings or the Specifications shall have a higher priority.

6.2 Warranty Period

The product is warranted for one (1) year from the date of delivery to the location specified by the customer.

6.3 Remarks

- Warranty period specified in 6.2 Warranty Period is based on the assumption that the product is operated for not more than eight (8) hours a day. If the product reaches the end of its service life within one (1) year, the warranty shall expire at that time.
- If the product is exported outside Japan by the customer, it shall be repaired if returned to CKD's facility or a company or plant specified by CKD. Work and cost associated with the return shall not be covered by the warranty. The repaired product shall be delivered to a place in Japan specified by the customer in a package appropriate for delivery in Japan.