CKD

Electric Actuator

EBS-M Series (Slider Type)
EBR-M Series (Rod with Built-in Guide Type)

INSTRUCTION MANUAL

SM-A11148-A/4

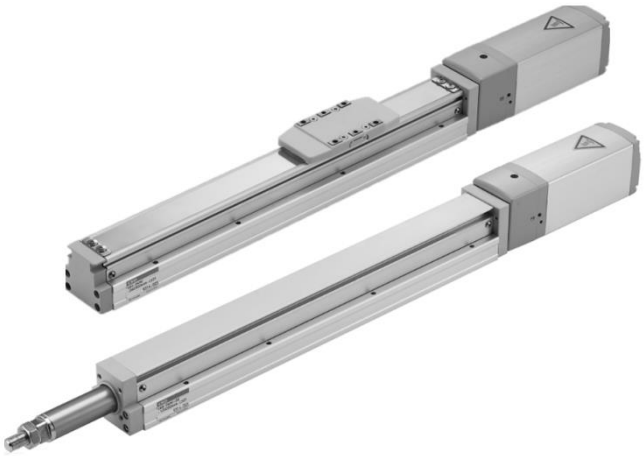

- Read this Instruction Manual before using the product.
- Read the safety notes carefully.
- Keep this Instruction Manual in a safe and convenient place for future reference.

CKD Corporation

PREFACE

Thank you for purchasing CKD's **"EBS-M Series/EBR-M Series" electric actuator**. This Instruction Manual contains basic matters such as installation and usage instructions in order to ensure optimal performance of the product. Please read this Instruction Manual thoroughly and use the product properly.
Keep this Instruction Manual in a safe place and be careful not to lose it.

Product specifications and appearances presented in this Instruction Manual are subject to change without notice.

- The product is intended for users who have basic knowledge of materials, wiring, electricity, and mechanisms. CKD shall not be responsible for accidents caused by persons who selected or used the product without knowledge or sufficient training.
- Since there are a wide variety of customer applications, it is impossible for CKD to be aware of all of them. Depending on the application or usage, the product may not be able to exercise its full performance or an accident may occur due to fluid, wiring, or other conditions. It is the responsibility of the customer to check the product specifications and decide how the product shall be used in accordance with the application and usage.

SAFETY INFORMATION

When designing and manufacturing any device incorporating the product, the manufacturer has an obligation to ensure that the device is safe. To that end, make sure that the safety of the machine mechanism of the device and the electric system that controls such mechanism is ensured.

In order to use our products safely, it is important to select, use, handle, and maintain the products properly.
Observe the warnings and precautions described in this Instruction Manual to ensure device safety.

Although various safety measures have been adopted in the product, customer's improper handling may lead to an accident. To avoid this:

Thoroughly read and understand this Instruction Manual before using the product.

To explicitly indicate the severity and likelihood of a potential harm or damage, precautions are classified into three categories: "DANGER", "WARNING", and "CAUTION".

⚠ DANGER	Indicates an imminent hazard. Improper handling will cause death or serious injury to people.
⚠ WARNING	Indicates a potential hazard. Improper handling may cause death or serious injury to people.
⚠ CAUTION	Indicates a potential hazard. Improper handling may cause injury to people or damage to property.

Precautions classified as "CAUTION" may still lead to serious results depending on the situation.
All precautions are equally important and must be observed.

Other general precautions and tips on using the product are indicated by the following icon.

	Indicates general precautions and tips on using the product.

Precautions on Product Use

⚠DANGER

Do not use the product for the following applications:

- Medical equipment pertaining to sustainment and management of human life and body
- Mechanism and mechanical device for transferring and transporting people
- Critical parts for securing safety in a mechanical device

⚠WARNING

Use the product within the specifications.

Precautions on Product Disposal

⚠CAUTION

When disposing of the product, comply with laws pertaining to disposal and cleaning of wastes and have an industrial waste disposal company dispose of the product.

CONTENTS

PREFACE ..... **i**
SAFETY INFORMATION ..... **ii**
Precautions on Product Use iii
Precautions on Product Disposal iii
CONTENTS ..... **iv**
1. PRODUCT OVERVIEW **1**
1.1 System Overview 1
1.2 Instruction Manual Related to This Product 2
1.3 Part Name 2
1.3.1 EBS-M Series (slider type) 2
1.3.2 EBR-M Series (rod with built-in guide type) 2
1.4 Model Number Indication 3
1.4.1 EBS-M Series (slider type) 3
1.4.2 EBR-M Series (rod with built-in guide type) 4
1.4.3 Motor cable (fixed/movable) 5
1.4.4 Encoder cable (fixed/movable) 5
2. INSTALLATION **6**
2.1 Environment 8
2.2 Unpacking 8
2.3 Installing 9
2.3.1 EBS-M Series (slider type) 10
2.3.2 EBR-M Series (rod with built-in guide type) 10
2.3.3 Objects Transferred 10
3. USAGE **11**
3.1 Safety Instructions 11
4. MAINTENANCE AND INSPECTION **12**
4.1 Periodic Inspection 13
4.1.1 Inspection item 13
4.1.2 Application of grease 14
4.1.3 EBS-M Series (slider type) greasing procedure 14
4.1.4 EBR-M Series (rod with built-in guide type) greasing procedure 15
4.1.5 Replacement and adjustment procedures for the steel belt 16
4.1.6 Replacement and adjustment methods for the timing belt 16
4.1.7 Replacement and adjustment methods for the motor unit 18
5. TROUBLESHOOTING **19**
5.1 Items to Check When a Problem Occurs 19
5.2 Problems, Causes, and Solutions 20
6. WARRANTY PROVISIONS **22**
6.1 Warranty Conditions 22
6.2 Warranty Period 22
6.3 Remarks 22

1. PRODUCT OVERVIEW

1.1 System Overview

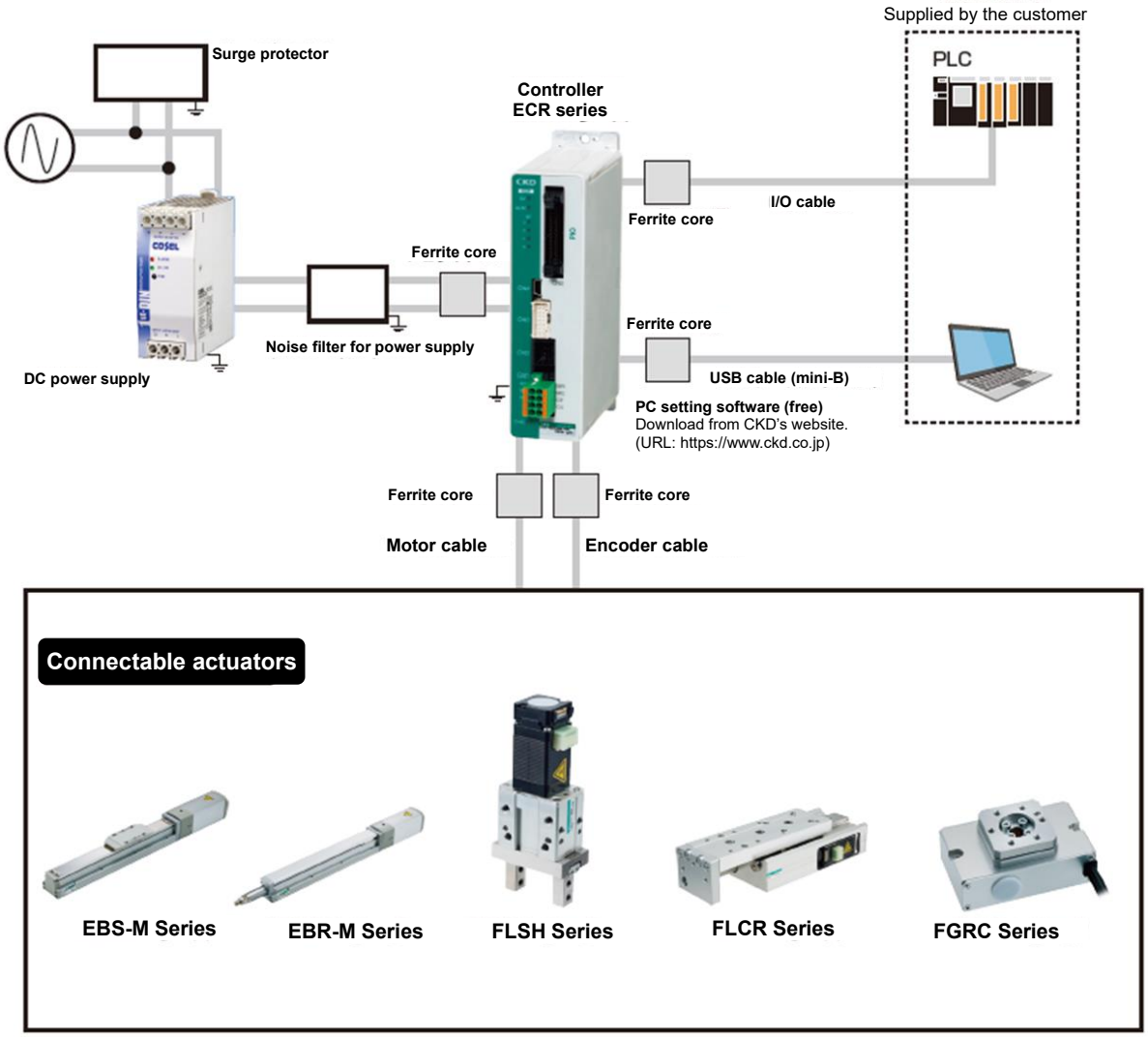

Item	Part name	Product name/Model no.
Components	Controller	ECR Series
	Actuator	EBS-M/EBR-M Series
	Motor cable	EA-CBLM1-*
	Encoder cable	EA-CBLME1-*
	I/O cable	EA-CBLNP1-*
	24 VDC power supply	EA-PWR-KHNA240F-24
	48 VDC power supply	EA-PWR-KHNA480F-48
	Surge protector	AX-NSF-RAV-781BXZ-4
	Noise filter	AX-NSF-NF2015A-OD
	Ferrite core (7 pieces)	EA-NSF-FC01-SET
Free of charge	PC setting software	S-Tools

1.2 Instruction Manual Related to This Product

For the Instruction Manual for controllers and setting tools related to this product, refer to the following.

Part name	No.
Electric actuator ECR (controller)	SM-A10615
Electric actuator ECR (controller) - IO-Link specification	SM-A10616
Electric actuator ECR (controller) - CC-Link specification	SM-A10617
Electric actuator ECR (controller) - EtherCAT specification	SM-A10618
PC Setting Software for Electric Actuators - S-Tools	SM-A11147
Maintenance Part for Electric Actuator Motor Unit for EBS-M/EBR-M Series	SM-A24904

1.3 Part Name

1.3.1 EBS-M Series (slider type)

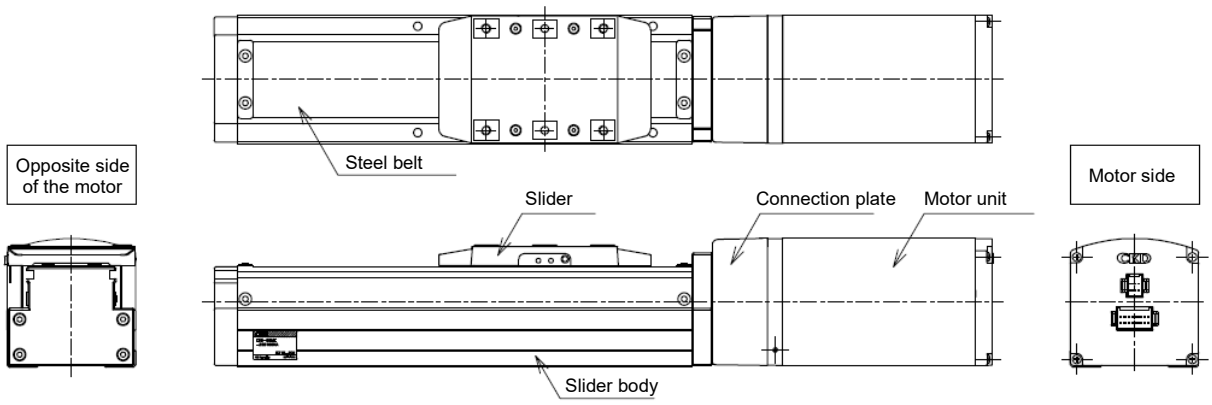

1.3.2 EBR-M Series (rod with built-in guide type)

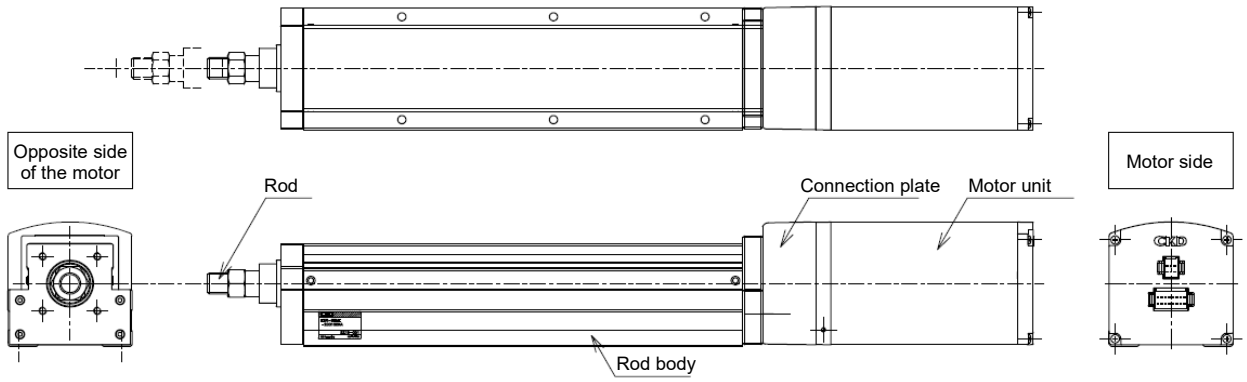

1.4 Model Number Indication

1.4.1 EBS-M Series (slider type)

The minimum stroke for item Ⓔ is “0250: 250 mm” when “D: Bottom mounting” for item Ⓒ is selected.

・Standard series

EBS – 04 M R – 06 0300 N A N – C S03
Ⓐ Ⓑ Ⓒ Ⓓ Ⓔ Ⓕ Ⓖ Ⓗ

Ⓐ Body size	
04	Body width 44 mm

Ⓑ Applicable controller	
M	ECR

Ⓒ Motor mounting direction	
E	Straight mounting
R	Right-side mounting
D	Bottom mounting
L	Left-side mounting

Ⓓ Screw lead	
06	6 mm
12	12 mm

Ⓔ Stroke length	
0050 to 0500	50 mm (In 50 mm increments) 500 mm

Ⓕ Brake	
N	Without brake
B	With brake

Ⓖ Encoder	
A	Battery-less absolute encoder (For ECR)
B	Battery-less absolute encoder (For ECG)
C	Incremental encoder (For ECG)

Ⓗ Relay cable	
N00	None
S01	Fixing cable 1 m
S03	Fixing cable 3 m
S05	Fixing cable 5 m
S10	Fixing cable 10 m
R01	Movable cable 1 m
R03	Movable cable 3 m
R05	Movable cable 5 m
R10	Movable cable 10 m

EBS – 05 M R – 05 0300 N A N – C S03
Ⓐ Ⓑ Ⓒ Ⓓ Ⓔ Ⓕ Ⓖ Ⓗ

Ⓐ Body size	
05	Body width 54 mm

Ⓑ Applicable controller	
M	ECR

Ⓒ Motor mounting direction	
E	Straight mounting
R	Right-side mounting
D	Bottom mounting
L	Left-side mounting

Ⓓ Screw lead	
02	2 mm
05	5 mm
10	10 mm
20	20 mm

Ⓔ Stroke length	
0050 to 0800	50 mm (In 50 mm increments) 800 mm

Ⓕ Brake	
N	Without brake
B	With brake

Ⓖ Encoder	
A	Battery-less absolute encoder (For ECR)
B	Battery-less absolute encoder (For ECG)
C	Incremental encoder (For ECG)

Ⓗ Relay cable	
N00	None
S01	Fixing cable 1 m
S03	Fixing cable 3 m
S05	Fixing cable 5 m
S10	Fixing cable 10 m
R01	Movable cable 1 m
R03	Movable cable 3 m
R05	Movable cable 5 m
R10	Movable cable 10 m

EBS – 08 M R – 05 0300 N A N – C S03
Ⓐ Ⓑ Ⓒ Ⓓ Ⓔ Ⓕ Ⓖ Ⓗ

Ⓐ Body size	
08	Body width 82 mm

Ⓑ Applicable controller	
M	ECR

Ⓒ Motor mounting direction	
E	Straight mounting
R	Right-side mounting
D	Bottom mounting
L	Left-side mounting

Ⓓ Screw lead	
05	5mm
10	10mm
20	20mm

Ⓔ Stroke length	
0050 to 1100	50 mm (In 50 mm increments) 1100 mm

Ⓕ Brake	
N	Without brake
B	With brake

Ⓖ Encoder	
A	Battery-less absolute encoder (For ECR)
B	Battery-less absolute encoder (For ECG)
C	Incremental encoder (For ECG)

Ⓗ Relay cable	
N00	None
S01	Fixing cable 1 m
S03	Fixing cable 3 m
S05	Fixing cable 5 m
S10	Fixing cable 10 m
R01	Movable cable 1 m
R03	Movable cable 3 m
R05	Movable cable 5 m
R10	Movable cable 10 m

・FP1 series

EBS - 05 M R - 05 0300 N A N - C S03 - N - FP1
Ⓐ Ⓑ Ⓒ Ⓓ Ⓔ Ⓕ Ⓖ Ⓗ Ⓘ

Ⓐ to Ⓗ
Refer to standard series

Ⓘ Anti-rust treatment	
N	None
U	Yes

1.4.2 EBR-M Series (rod with built-in guide type)

The minimum stroke for item Ⓕ is “0250: 250 mm” when “D: Bottom mounting” for item Ⓒ is selected.

・Standard series

EBR – 04 (Ⓐ) M (Ⓑ) R (Ⓒ) – 00 (Ⓓ) – 06 (Ⓔ) 0300 (Ⓕ) N (Ⓖ) A (Ⓗ) N – C S03 (Ⓘ)

ⒶBody size	
04	Body width 44 mm

ⒷApplicable controller	
M	ECR

ⒸMotor mounting direction	
E	Straight mounting
R	Right-side mounting
D	Bottom mounting
L	Left-side mounting

ⒹMounting	
00	Basic
FA	Rod side flange

ⒺScrew lead	
06	6mm
12	12mm

ⒻStroke length	
0050 to 0400	50 mm (In 50 mm increments) 400 mm

ⒼBrake	
N	Without brake
B	With brake

ⒽEncoder	
A	Battery-less absolute encoder (For ECR)
B	Battery-less absolute encoder (For ECG)
C	Incremental encoder (For ECG)

ⒾRelay cable	
N00	None
S01	Fixing cable 1 m
S03	Fixing cable 3 m
S05	Fixing cable 5 m
S10	Fixing cable 10 m
R01	Movable cable 1 m
R03	Movable cable 3 m
R05	Movable cable 5 m
R10	Movable cable 10 m

EBR – 05 (Ⓐ) M (Ⓑ) R (Ⓒ) – 00 (Ⓓ) – 05 (Ⓔ) 0300 (Ⓕ) N (Ⓖ) A (Ⓗ) N – C S03 (Ⓘ)

ⒶBody size	
05	Body width 54 mm

ⒷApplicable controller	
M	ECR

ⒸMotor mounting direction	
E	Straight mounting
R	Right-side mounting
D	Bottom mounting
L	Left-side mounting

ⒹMounting	
00	Basic
FA	Rod side flange

ⒺScrew lead	
02	2mm
05	5mm
10	10mm
20	20mm

ⒻStroke length	
0050 to 0400	50 mm (In 50 mm increments) 400 mm

ⒼBrake	
N	Without brake
B	With brake

ⒽEncoder	
A	Battery-less absolute encoder (For ECR)
B	Battery-less absolute encoder (For ECG)
C	Incremental encoder (For ECG)

ⒾRelay cable	
N00	None
S01	Fixing cable 1 m
S03	Fixing cable 3 m
S05	Fixing cable 5 m
S10	Fixing cable 10 m
R01	Movable cable 1 m
R03	Movable cable 3 m
R05	Movable cable 5 m
R10	Movable cable 10 m

EBR – 08 (Ⓐ) M (Ⓑ) R (Ⓒ) – 00 (Ⓓ) – 05 (Ⓔ) 0300 (Ⓕ) N (Ⓖ) A (Ⓗ) N – C S03 (Ⓘ)

ⒶBody size	
08	Body width 82 mm

ⒷApplicable controller	
M	ECR

ⒸMotor mounting direction	
E	Straight mounting
R	Right-side mounting
D	Bottom mounting
L	Left-side mounting

ⒹMounting	
00	Basic
FA	Rod side flange

ⒺScrew lead	
05	5mm
10	10mm
20	20mm

ⒻStroke length	
0050 to 0700	50 mm (In 50 mm increments) 700 mm

ⒼBrake	
N	Without brake
B	With brake

ⒽEncoder	
A	Battery-less absolute encoder (For ECR)
B	Battery-less absolute encoder (For ECG)
C	Incremental encoder (For ECG)

ⒾRelay cable	
N00	None
S01	Fixing cable 1 m
S03	Fixing cable 3 m
S05	Fixing cable 5 m
S10	Fixing cable 10 m
R01	Movable cable 1 m
R03	Movable cable 3 m
R05	Movable cable 5 m
R10	Movable cable 10 m

・FP 1series

EBR - 05 (Ⓐ) M (Ⓑ) R (Ⓒ) - 00 (Ⓓ) - 05 (Ⓔ) 0300 (Ⓕ) N (Ⓖ) A (Ⓗ) N - C S03 (Ⓘ) - **FP1**

Ⓐ to Ⓘ
Refer to standard series

1.4.3 Motor cable (fixed/movable)

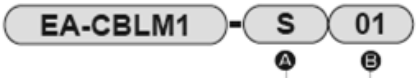

A Cable type	
S	Fixed cable
R	Movable cable

B Cable length	
01	1 m
03	3 m
05	5 m
10	10 m

1.4.4 Encoder cable (fixed/movable)

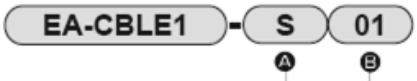

A Cable type	
S	Fixed cable
R	Movable cable

B Cable length	
01	1 m
03	3 m
05	5 m
10	10 m

2. INSTALLATION

⚠DANGER

Do not use the product in a place where dangerous substances such as ignitable, inflammable, or explosive materials are present.
Ignition, inflammation, or explosion may occur.

Prevent water and oil from splashing onto the product.
A fire, electric leakage, or failure may occur. Even oil drops and oil mists are prohibited.

Make sure to hold and secure the product (including the workpiece) while installing the product.
An injury may occur if the product falls down, falls off, or operates abnormally.

Use a DC stabilized power supply (24 VDC/48 VDC ± 10%) with sufficient capacity as a power supply for the controller and the input/output circuit.
If the product is directly connected to an AC power supply, a fire, burst or damage may occur.

Install overcurrent protective equipment (such as a breaker for wiring and a circuit protector) on the primary side of the power supply when wiring in accordance with "JIS B 9960-1:2008 Safety of machinery - Electrical equipment of machines - Part 1: General requirements".

> Description from "7.2.1 General" of JIS B 9960-1:2008:
> Overcurrent protection shall be provided where the current in a machine (equipment) circuit can exceed either the rating of any component or the currenty carrying capacity of the conductors, whichever is the lesser value. The ratings or settings to be selected are detailed in 7.2.10.

⚠WARNING

Do not install the product to a combustible material.
If the product is installed directly to or near a combustible material, a fire may result.

If the system is such that the machine stops in the event of a system failure such as an emergency stop or a power failure, design and implement a safety circuit or a safety device to prevent damages to the devices and injuries to people.

Install the product indoors and in a dry place.
In a place where water can splash onto the product or where humidity is high (80% or more and with condensation), an electric leakage or fire accident may occur.

Perform class D grounding (ground resistance: 100 Ω or less) for the product.
An electric leakage may occur and cause an electric shock or malfunction.

When wiring the product, refer to this Instruction Manual or any other relevant instruction manuals to make sure that the connectors are firmly connected and the wires are properly insulated.
Make sure that the wires do not contact other circuits and there is no ground fault and insulation failure between terminals. Otherwise, an overcurrent may flow into the product and cause damage. This may result in an abnormal operation or fire.

Insulate unused wires.
A malfunction, failure, or electric shock may occur.

Do not damage or pinch the cables, apply unnecessary stress to the cables, or place heavy objects on the cables.
A conduction failure or electric shock may occur.

When installing and using the actuator in an orientation other than the horizontal, use an actuator equipped with a brake.
If using an actuator without a brake, the movable section may fall during servo off (including emergency stop and alarm) or while the power is turned off. This may result in an injury or damage to the workpiece.

Do not carry or install the product by holding the movable section or the cable.
An injury or cable disconnection may occur.

⚠ CAUTION

Install the wiring so that no induction noise is applied.

- Avoid using the product in a place where a large current or strong magnetic field occurs.
- Do not pipe or wire the product in the same piping or wiring (with multi-conductor cables) as the power lines for other large motors.
- Do not pipe or wire the product in the same piping or wiring as the power supplies and wires for inverters used in robots. Frame ground the power supply and insert a filter into the output section.

Do not use the product in an environment where a strong magnetic field occurs.
A malfunction may occur.

Separate the power for the output section of the product from the power for inductive loads (such as a solenoid valve and a relay) that generate surge currents.
If the power is shared, a surge current will flow into the output section and cause damage.
If the power cannot be separated, connect the surge absorption elements in parallel directly to all the inductive loads.

Do not perform a withstand voltage test or an insulation resistance test in a device with the product installed.
A capacitor is connected between the circuit of the control board in the product and the metal body to prevent damages from static electricity. Therefore, performing the tests above will damage the product. If these tests are required for the device, remove the product beforehand.

Remove all the FG (frame ground) connections of the product before performing an electric welding on the device to which the product is installed.
If an electric welding is performed without removing the FG connections, the product may become damaged due to a welding current or excessive high voltage and surge voltage from welding.

Select a power that has sufficient capacity for the number of products installed.
If the capacity is not sufficient, a malfunction may occur.

Do not disassemble the product.

Do not bend the fixed cable repeatedly.
If repetitive bending is unavoidable, use a movable cable.

Secure the movable cable so that it will not move easily. When securing the movable cable, do not bend it to an acute angle (a bending radius of 51 mm or less).

When installing an external stopper or a holding mechanism (such as a brake), place it at a position where it does not affect the detection of the origin position.
The origin position is detected when the power is turned on. If the detection is interfered by an external stopper or a holding mechanism, an unintended position may be recognized as the origin position.

Do not use the product in a place exposed to ultraviolet rays or in an atmosphere where corrosive gas and salt are present.
A performance degradation, abnormal operation or strength deterioration due to rust formation may occur.

Do not install the product in a place subjected to strong vibrations or shocks.
If the product is subjected to strong vibrations or shocks, a malfunction may occur.

Do not use the product in a place where condensation occurs due to a sudden change in the ambient temperature.

The customer is responsible for checking the compatibility of the product with the customer's system, machinery, and device.

Connect only cables designed for the product.
A failure of the product or unexpected accident may occur.

2.1 Environment

- Check the environment temperature and atmosphere before using and storing the product.
- Use the product at an ambient temperature between 0°C and 40°C. Ventilate if heat can become trapped.
- Install the product where it is not subjected to direct sunlight and away from a heating element. Also, avoid dust, corrosive gas, explosive gas, inflammable gas, and combustible material. Chemical resistance has not been considered for the product.
- Install the actuator on a smooth and flat surface.
- In order to avoid operation fault and damage, do not install the actuator on a surface with dents.
- The controller is set using setting software (S-Tools). Leave a space of 70 mm or more in front of the controller so that the connector of the connection cable of the PC can be connected and disconnected.

2.2 Unpacking



- When carrying and handling the product, use extreme care not to apply impact to the product (for example, do not drop the product).
- Do not carry heavy products alone.
- Place the product horizontally when not in use.
- Do not stand on the package.
- In order to prevent deforming the package, do not place heavy objects and objects of which their load concentrates.
- When taking the actuator out of the package, hold the actuator body.
- Do not apply unnecessary force to any part of the actuator.

- Check that the model number ordered and the model number indicated on the product are the same.
- Check the exterior of the product for any damage.

2.3 Installing

- Precision processing finishing has been performed for the base and table mounting surfaces so that this product will obtain highly accurate linear movement.
- The flatness of the mounting surface of a system has been finished highly accurately by grinding processing, so stable high accuracy can be obtained. (Recommended flatness: 0.05 mm/200 mm or less)
- Do not put dents and scratches interfering with the flatness of a mounting surface.
- For the length of a screw mounting the body and tightening torque, refer to the following table.

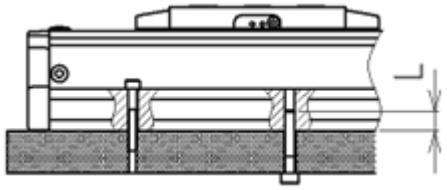

Item	(A) Mounting from upper surface		(B) Mounting from lower surface		
	Bolt	Tightening torque (N·m)	Bolt	Tightening torque (N·m)	Min. screw-in depth L (mm)
EBS-04 EBR-04	M3 × 0.5	0.63	M4 × 0.7	1.5	6
EBS-05 EBR-05	M4 × 0.7	1.5	M5 × 0.8	3	7.5
EBS-08 EBR-08	M5 × 0.8	3	M6 × 1	5.2	9

2.3.1 EBS-M Series (slider type)

- Do not apply an excessive shock or moment to the slider.
  A malfunction or damage may occur.
- The flatness of the workpiece mounting surface should be 0.05 mm or less. Do not apply twisting or bending force to the product.
  An operation fault or damage may occur.

2.3.2 EBR-M Series (rod with built-in guide type)

- Make sure to align the direction of the movement of the center of the rod shaft and the center of the transfer load.
  Feed screws may become worn or damaged.
- Do not apply a load in the rotational direction to the rod end.
  The product may become damaged.

- When using an external guide, check that it can operate smoothly throughout the product stroke before installing it.

2.3.3 Objects Transferred

For the slider type, the flatness of the workpiece attached to the slider should be 0.05 mm/200 mm or less. Do not apply twisting or bending force to the product.
Damage may occur.

- Use the transfer load, allowable moment, and overhang amount within the specification range of the product.
  For details, refer to the "Selection guide" page in the catalog.

3. USAGE

3.1 Safety Instructions

⚠WARNING

Before supplying electricity to the product, check that the operation area of the device is safe.
If electricity is supplied without checking safety, an electric shock or injury may occur.

Turn off the power immediately if the LED on the product does not blink even when the power is turned on.

Do not enter the operating area of the device when the product is in an operational state.
The product may operate unexpectedly and an injury may occur.
When using the EBS-M Series, your fingers may get caught between the motor section and the slider.

Do not touch the product body during or immediately after operation.
A burn injury may occur.

Do not stand or put an object on the product.
A fall accident, injury due to the product falling down or off, or malfunction and runaway due to the product becoming damaged may occur.

Take measures to prevent damage to the human body and the device in case of power failures.

Before controlling the actuator from a position where it cannot be seen, check that it is safe for the actuator to operate.

Before setting the movable section of the product manually (direct teaching), use the setting software (S-Tools) to confirm that the servo is turned off.

Do not give commands that are smaller than the minimum resolution and the repetitive positioning accuracy of the encoder.
The positioning control may not be performed properly.

⚠CAUTION

Do not move the movable section of the product with external force and do not use the product in an application that requires the movable section to decelerate suddenly.
A malfunction or damage may occur due to regenerative currents.

Except when returning to the origin or when clamping, do not allow the piston rod and the table to hit parts such as the mechanical stopper.
The feed screw may become damaged due to impacts and an operation fault may occur.

Do not put dents and scratches on the movable section.
An operation fault may occur.

Leave a margin for the transfer load since the product life changes depending on the transfer load and the environment.

Do not subject the movable section to impact.

Do not subject the product to external force when returning to the origin.
The origin may not be recognized correctly.

Do not turn off the servo while gravity or force of inertia is applied.
The slider or the rod may continue to move or fall off if the servo is turned off. Turn off the servo in an equilibrium state where no gravity and force of inertia are applied or after safety is ensured.

Do not stop the product while it is accelerating or decelerating.
It may lead to a change in speed (acceleration) and cause a risk.

4. MAINTENANCE AND INSPECTION

⚠ WARNING

Install the product before wiring.
An electric shock may occur.

Do not work with wet hands.
An electric shock may occur.

Before performing wiring and inspection, wait five minutes or longer after turning off the power and check the voltage with a tester.
An electric shock may occur.

Do not attach or remove wires and connectors with the power turned on.
A malfunction, failure, or electric shock may occur.

Do not disassemble or modify the product.
An injury, accident, malfunction, or failure may occur.

⚠ CAUTION

Wiring and inspections must be performed by specialists.

For the lead wires used for the power cable, use wires with a sufficient diameter that can allow the instantaneous maximum current to flow.
A heat generation or damage may occur during operation.

Perform periodic inspections (two to three times a year) to confirm that the product operates properly.

Grease the product every 100 km.
Since the greasing interval depends on the conditions of use, determine it when conducting the initial inspection.

Turn off the power immediately if abnormal heat, smoke, odor, sound, or vibration occurs in the product.
The product may become damaged or the continuous flow of currents may cause a fire.

Stop supplying power to the product before performing maintenance, inspection, and repair.
Take measures to prevent a third person from turning on the power unexpectedly.

4.1 Periodic Inspection

In order to use the product under optimum conditions, perform a periodic inspection two to three times a year.

4.1.1 Inspection item

Turn off the power before performing items 1, 2, and 3 below.

No.	Inspection item	Inspection method	Action
1	Check that the mounting bolts on the product, the screws on the terminal block, and the connectors are not loose.	Looseness check	Tighten the loose parts.
2	Check that there are no scratches and cracks on the cables.	Visual inspection	Replace the cable.
3	Check that foreign matters are not accumulating or are not stuck in between the movable section.	Visual inspection	Clean the parts. Note 1 After cleaning, apply grease. The frequency shall be about once every three months or a running distance of 100 km. Note 2 Note 3 Standard series: AFEP2 grease (YAMABALA) FP1 series: Super Lube 00580 Multipurpose grease (Synco Chemical)
4	Check that there are no scratches, cracks, and tears on the timing belt.	Visual inspection	Replace the timing belt. Note 4
5	Check that there are no vibrations or abnormal sounds while the product is stopped or operated.	Noise inspection	Contact your dealer.
6	Check that the power supply voltage is normal.	Tester	Check the power system and use the product within the power supply voltage range described in the Specifications.

Note 1: Use a soft cloth for cleaning and make sure not to leave foreign matters on the movable section.
Note 2: For the application method for grease, refer to another page.
Note 3: A low-lead product can be used more safely by applying grease earlier than the reference.
Note 4: For the replacement method for the timing belt, refer to another page.

4.1.2 Application of grease

- Standard series: Manufactured by YAMABALA AFEP2
- FP1 series: Manufactured by Synco Chemical Super Lube 00580 Multipurpose grease

For the recommended tip shape of a nozzle used during grease application, refer to the following figure. The nozzle with the shape in the following figure is also available at CKD. For details, refer to the catalog.

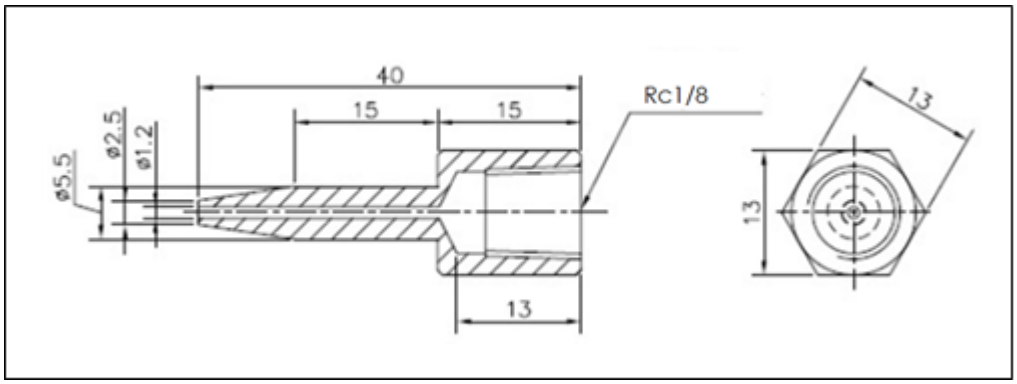

4.1.3 EBS-M Series (slider type) greasing procedure

1 Wipe off old grease and dirt with a clean waste cloth.

2 Inject the grease from the greasing port on the slider side surface.
The grease is applied to the guide part and the ball screw part.

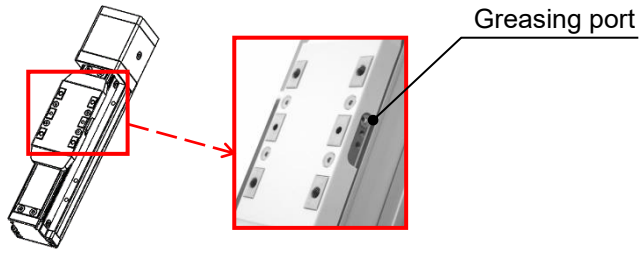

3 Perform a break-in operation to apply grease.

4.1.4 EBR-M Series (rod with built-in guide type) greasing procedure

1. Wipe off old grease and dirt with a clean waste cloth.
2. Loosen four locking screws on the side surface with a hex key and remove the upper surface cover.
   Use a hex key with the short arm length of 10 mm or less for “R: Right-side mounting” or “L: Left-side mounting”.
3. Inject the grease from the greasing port.



4. Perform a break-in operation to apply grease.

4.1.5 Replacement and adjustment procedures for the steel belt

1 Loosen the screw at the slider part with a hex key and remove the resin cover.

2 Remove the screws on both ends of the steel belt.

3 Clean and replace it.
When attaching the steel belt, pull both ends so that the belt will not deflect and tighten the screw while applying appropriate tension.

* The steel belt deforms easily, so be careful for handling.



1



2

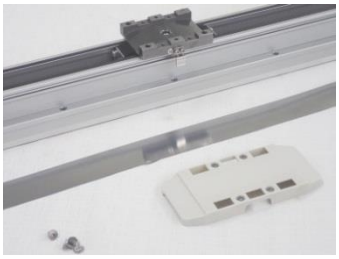

3



4

4.1.6 Replacement and adjustment methods for the timing belt

Be careful not to lose any parts that were removed (such as screws) since they are used again during assembly.

■ Removing the belt cover

- **Bolt: Hexagon socket head bolt (M3 x 30L) x 4 pieces**
- **Tool: Hex key for M3 (across flats: 2.5 mm)**

1 Remove four bolts and remove the belt cover.

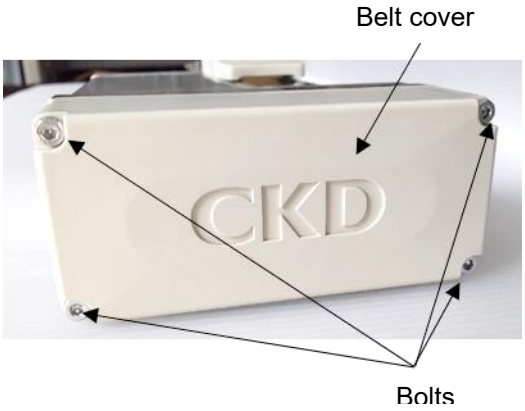

■ Replacing the timing belt

- **Bolt:**
  Hexagon socket head bolt (EBS/EBR-04/05: M3 x 16L, EBS/EBR-08: M4 x 18L) x 4 pieces
- **Tool: Hex key for M3 (across flats: 2.5 mm), for M4 (across flats: 3 mm)**
- **Timing belt model number:**
  EBS/EBR-04MR/D/L: EBS-04MR-BELT
  EBS/EBR-05MR/D/L: EBS-05MR-BELT
  EBS/EBR-08MR/D/L: EBS-08MR-BELT

1 Loosen four bolts to some degree (so that the motor unit can slide without rattling), slide the motor unit toward the body, and remove the timing belt from the pulleys.

2 Attach a new timing belt to the pulleys.
Apply tension to the timing belt and adjust it so that the marks on the pulleys are aligned and facing the motor side.

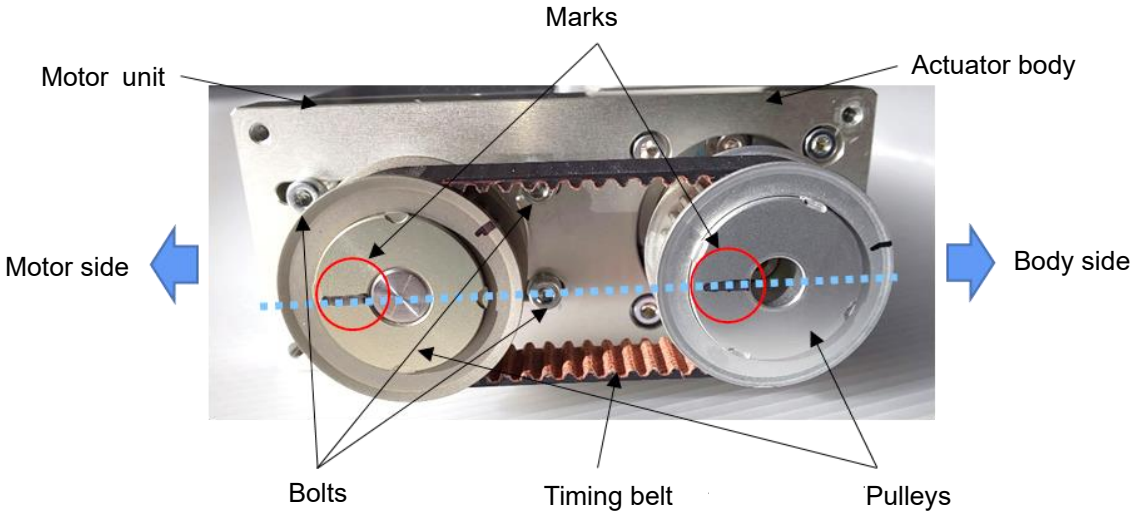

■ Adjusting the tension on the timing belt

- **Bolt:**
  Hexagon socket head bolt (EBS/EBR-04/05: M3 x 16L, EBS/EBR-08: M4 x 18L) x 4 pieces
- **Tool: Hex key for M3 (across flats: 2.5 mm), for M4 (across flats: 3 mm)**

1 Put a cord or a cable tie around the base of the motor section.

2 While pulling the cord or the cable tie with the specified force (common in all models: 40 N), tighten four bolts with the specified tightening torque (EBS/EBR-04/05: 0.3 N·m, EBS/EBR-08: 0.7 N·m).

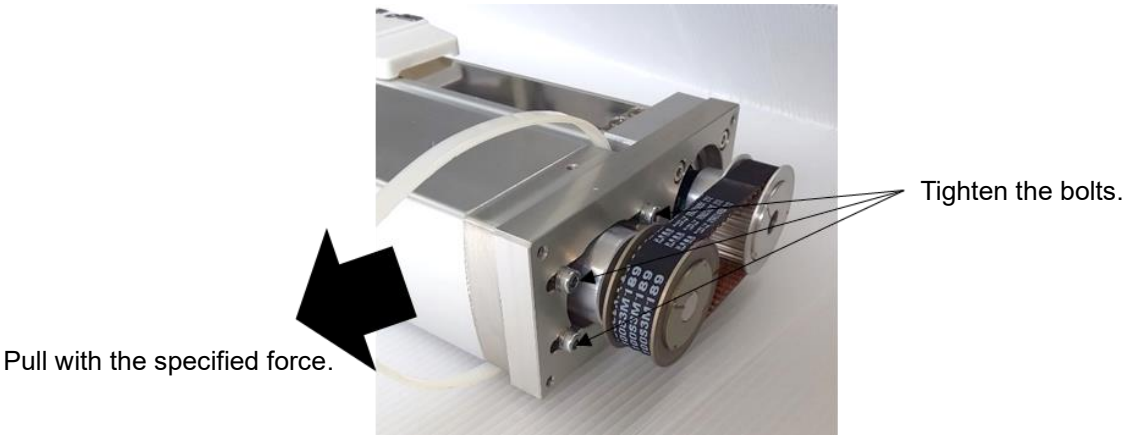

■ Attaching the belt cover

- **Bolt: Hexagon socket head bolt (M3 x 30L) x 4 pieces**
- **Tool: Hex key for M3 (across flats: 2.5 mm)**
- **Tightening torque: 0.3 N·m**

1 Tighten four bolts with the specified tightening torque (0.3 N·m) and attach the belt cover.

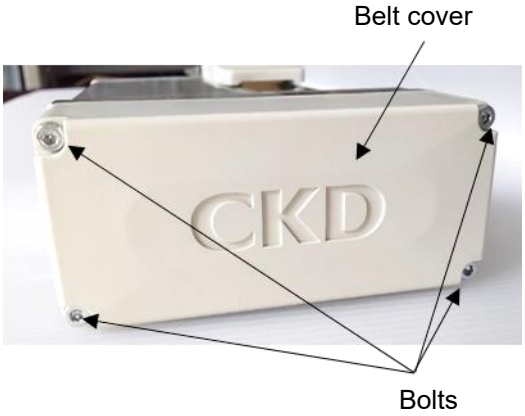

■ Adjusting the orijin

Refer to “SM-A24904 Motor Unit Instruction Manual” and adjust the origin.

4.1.7 Replacement and adjustment methods for the motor unit

Refer to “SM-A24904 Motor Unit Instruction Manual” for the replacement and adjustment methods.

5. TROUBLESHOOTING

5.1 Items to Check When a Problem Occurs

When a problem occurs, ensure safety and follow the procedure below.

1	Check the light status on the controller. <Servo lamp (when the alarm lamp is off)> Lit green: Current passed to motor (servo ON) Blinking green: Current not passed to motor (servo OFF) <Alarm lamp> Lit red: Occurrence of alarm which cannot be released Blinking red (lit once per second): Occurrence of alarm which can be released Blinking red (lit once every 2 seconds): Occurrence of warning <Servo lamp and alarm lamp> Off: Control power supply shutoff
2	Check if there is an abnormality with the higher-level controller.
3	Check the voltage of the control power (24 VDC or 48 VDC).
4	Check the details of the alarm. The details of the alarm can be checked with the setting software (S-Tools).
5	Check the state of the I/O. The state of the I/O can be checked with the setting software (S-Tools).
6	Check that there is no disconnection or pinching of the cables and that they are connected correctly. Before checking the continuity, turn off the power and remove the cables to prevent an electric shock.
7	Check that measures (such as connecting the ground wire and attaching the surge suppressor) have been taken against noise.
8	Check the course of events and the operating conditions at the time the problem occurred.
9	Check the serial number of the product.

If the problem persists, refer also to “5.2 Problems, Causes, and Solutions”.

5.2 Problems, Causes, and Solutions

If the product does not operate as intended, check the table below for a possible solution.

Problem	Cause	Solution
Even when power is turned on, LED indicator on controller does not light up.	Wiring is not correct.	Check the wiring to the power.
	Wiring is disconnected.	Check for pinching and disconnection of cables and check the connection of connectors and terminals.
	Product is malfunctioning or is damaged.	Repair or replace the product. Refer to "5.1 Items to Check When a Problem Occurs" and contact your nearest CKD sales office or distributor.
LED indicator on controller remains lit in red.	Alarm has been issued.	Refer to the setting software (S-Tools) to find and remove the cause of the alarm.
	There is an abnormality in system.	Repair or replace the product. Refer to "5.1 Items to Check When a Problem Occurs" and contact your nearest CKD sales office or distributor.
No operation standby completion signal is output.	Wiring for emergency stop signal is NO contact connection.	Change the wiring for emergency stop (EMG) to NC contact connection.
	Wiring is not correct.	Refer to Chapter 4 in “Controller Instruction Manual (SM-A10615)” and check the wiring.
Product does not operate as intended with PLC signal.	Input signal is unstable.	Input from the higher system may be causing chattering. Maintain the input signal for 20 ms or more.
	Return to origin cannot be completed or performed.	Transfer load may be too large. Check the Specifications.
	Setting of position, speed, acceleration, or pressing force is not correct.	Check the details of the point data.
	Setting of operation mode is not correct.	Check the setting of the "operation mode" in the parameter data.
	Wiring is not correct.	Refer to Chapter 4 in “Controller Instruction Manual (SM-A10615)” and check the wiring.
	Friction load is too large.	Check the friction load during transfer. Check that there is no jamming with the workpiece.
	Workpiece is in contact with an object on slider or rod.	Check how the device is assembled and set up.
	Internal resistance of product has increased.	Check the environment conditions and the conditions of use. Check how long the product has been in use (operation distance).
	Actuator body is damaged.	Repair or replace the product. Refer to "5.1 Items to Check When a Problem Occurs" and contact CKD.
Product itself vibrates.	Connection to actuator is loose.	Tighten the bolts.

Problem	Cause	Solution	
Product cannot be operated with PLC.	Mode is set to TOOL mode.	Change the mode to the PLC mode using the setting software (S-Tools).	
	Wiring is not correct.	Refer to Chapter 4 in “Controller Instruction Manual (SM-A11143)” and check the wiring.	
	Wiring is disconnected.	Check for pinching and disconnection of cables and check the connection of connectors and terminals.	
	Overload error occurs.	Check the transfer load and the speed.	
	Power capacity is insufficient.	Check that the power capacity satisfies the required voltage and current.	
Workpiece moves due to its own weight during an emergency stop.	Brake is not equipped with product or brake is released forcibly. (Servo turns off at emergency stop.)	When a type without brake is used	Use a type equipped with a brake.
		When the brake is released forcibly	Turn off the function that forcibly released the brake.
	Load exceeding holding force is applied.	Check whether an external force greater than the holding force is applied. Check the setting of the "Current during stop" in the parameter data.	
Positioning completion output does not turn off.	Positioning completion output width is too large for movement distance.	Check the "Positioning width" in the point data.	
Pressing operation cannot be performed.	Mode is not set to pressing operation.	Check the "Operation method" in the point data.	
Device is out of step.	Load or speed has exceeded limit.	Check that the workpiece weight and the operation speed satisfy the specified values.	
Product cannot achieve desired speed (it is very slow).	It is set to pressing operation instead of general transfer movement.	Check the "Operation method" in the point data. Perform a gain adjustment.	
Overshoot occurs.	Both transfer weight and amount of deceleration are large.	Check that the workpiece weight and the operation speed satisfy the specified values. Perform a gain adjustment.	
Product cannot reach target takt time.	Setting of acceleration or speed is not correct.	Check the "Acceleration" and the "Speed" in the point data.	

If you have any other questions or concerns, contact your nearest CKD sales office or distributor.

6. WARRANTY PROVISIONS

6.1 Warranty Conditions

■ Warranty coverage

If the product specified herein fails for reasons attributable to CKD within the warranty period specified below, CKD will promptly provide a replacement for the faulty product or a part thereof or repair the faulty product at one of CKD's facilities free of charge.
However, following failures are excluded from this warranty:

- Failure caused by handling or use of the product under conditions and in environments not conforming to those stated in the catalog, the Specifications, or this Instruction Manual.
- Failure caused by incorrect use such as careless handling or improper management.
- Failure not caused by the product.
- Failure caused by use not intended for the product.
- Failure caused by modifications/alterations or repairs not carried out by CKD.
- Failure that could have been avoided if the customer's machinery or device, into which the product is incorporated, had functions and structures generally provided in the industry.
- Failure caused by reasons unforeseen at the level of technology available at the time of delivery.
- Failure caused by acts of nature and disasters beyond control of CKD.

The warranty stated herein covers only the delivered product itself. Any loss or damage induced by failure of the delivered product is excluded from this warranty.

■ Confirmation of product compatibility

It is the responsibility of the customer to confirm compatibility of the product with any system, machinery, or device used by the customer.

■ Others

The terms and conditions of this warranty stipulate basic matters.
When the terms and conditions of the warranty described in individual specification drawings or the Specifications are different from those of this warranty, the specification drawings or the Specifications shall have a higher priority.

6.2 Warranty Period

The product is warranted for one (1) year from the date of delivery to the location specified by the customer.

6.3 Remarks

- Warranty period specified in 6.2 Warranty Period is based on the assumption that the product is operated for not more than eight (8) hours a day. If the product reaches the end of its service life within one (1) year, the warranty shall expire at that time.
- If the product is exported outside Japan by the customer, it shall be repaired if returned to CKD's facility or a company or plant specified by CKD. Work and cost associated with the return shall not be covered by the warranty. The repaired product shall be delivered to a place in Japan specified by the customer in a package appropriate for delivery in Japan.