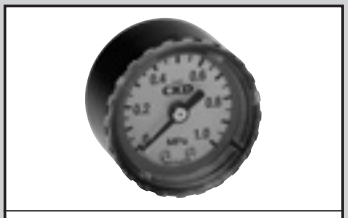

Pneumatic, Vacuum and Auxiliary Components
Catalog No. CB-024SA

Pressure gauge with safety marker

G40D Series

Easy visual inspection control due to green and red zone display.
●Port size: R1/8

JIS symbol

Specifications

Item	G40D	
	P10	P04
Working fluid	Compressed air	
Full scale MPa	1.0	0.4
Safety marker setting range MPa	0.15 to 1.0	0.06 to 0.4
Max. setting width MPa	0.45	0.18
Ambient temperature °C	5 to 60	
Fluid temperature °C	5 to 60	
Port size R	1/8	
Accuracy *1	Full scale ±3%	
Weight g	85	

*1: The guaranteed indicator accuracy temperature is 20±15°C.

Compatibility table by variation

	G40D
	Display ø42.5 with safety marker
Port size	R 1/8
P4	●

●: Applicable models ○: Semi-applicable models
▲: Contact CKD for details. ▭: Not applicable

How to order

G40D - 6 - P10 - P4

Ⓐ Model No.
Ⓑ Port size
Ⓒ Pressure display

Code	Description
Ⓐ Model No.	
G40D	Pressure gauge with safety marker
Ⓑ Port size	
6	R 1/8
Ⓒ Pressure display	
P10	For 0 to 1.0 MPa
P04	For 0 to 0.4 MPa

Dimensions and materials

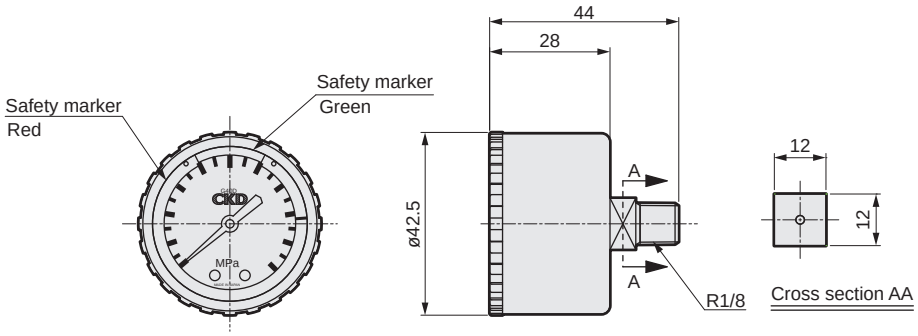

Part name	Material
Bourdon tube/stock	Stainless steel
Housing	Steel plate + paint
Lens	Polyamide resin
Mark	PBT resin

How to adjust pressure range

When removing the transparent face

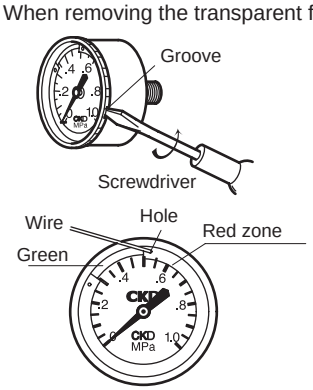

Remove the transparent face and insert a needle into the hole in the red zone to move the red zone marker. After adjustment, always reattach the transparent face before supplying pneumatic pressure.