CKD

SM−11474−A

INSTRUCTION MANUAL

MICROALESCER · M SERIES

AF3016M−50
AF3032M−80
AF3048M−100
AF3064M−100
AF3080M−150
AF3096M−150
AF3128M−150
AF3160M−200
AF3192M−200
AF3256M−200

- Please read this instruction manual carefully before using this product, particularly the section describing safety.
- Retain this instruction manual with the product for further consultation whenever necessary.

JUL-06 8th Edition
CKD Corporation

FORWARD

Thank you for purchasing our quality product, "Microalescer".
For proper application of it, please read this manual well prior to start operating it.

Beware of causing unexpected trouble sometimes, otherwise, not only may fail to attain the capacity to its full extent.

Keep this booklet in custody to prevent misplacing it.

Table of Contents

1. PRODUCT

1-1 Specifications ····· 1
1-2 External dimensions ····· 2

2. CAUTIONS

2-1 Formalities when installed Microalescer ····· 3
2-2 Operational cautions ····· 3

3. OPERATION

3-1 Prior to opening air valve ····· 4

4. INSTALLATION

4-1 Place of installation ····· 5
4-2 Installation ····· 7
4-3 Piping ····· 8

5. MAINTENANCE

5-1 Observation of differential pressure gauge ····· 9
5-2 Inspection of automatic drain ····· 9
5-3 Washing of bowl ····· 9
5-4 Dismounting of bowl ····· 9
5-5 Timing of element replacement ····· 9
5-6 Replacement procedure of element ····· 10
5-7 Expendable parts ····· 11
5-8 Replacement procedure of differential pressure gauge ····· 12

6. MODEL CODING ····· 13

1. PRODUCTS

1-1. Specifications

Item \ Model coding		AF3016M-50	AF3032M-80	AF3048M-100	AF3064M-100	AF3080M-150
Permissible max. air flow m^3/min(ANR)		16	32	48	64	80
Fluid used		Compressed air				
Operating pressure range	MPa	0.07～1.0				
Withstanding pressure	MPa	1.5				
Working temperature range	℃	5～60				
Removal particle size	μm	0.01				
Oil removal	mg/m^3	1.0(At inlet temperature 30℃)				
Initial operating pressure drop	MPa	0.01				
Nominal operating pressure drop	MPa	0.02～0.04				
Maximum permissible differential pressure	MPa	0.07				
Port size	FLG	2	3	4	4	6
Mass	kg	45	95	98	130	160
Differential pressure gauge		GA5102				
Parts No. of Automatic drain		5100-4C(Drain discharge port Rc$^1/_4$)				
Material	Body	Steel				
	Upper flange	Steel				

Item \ Model coding		AF3096M-150	AF3128M-150	AF3160M-200	AF3192M-200	AF3256M-200
Permissible max. air flow m^3/min(ANR)		96	128	160	192	256
Fluid used		Compressed air				
Operating pressure range	MPa	0.07～1.0				
Withstanding pressure	MPa	1.5				
Working temperature range	℃	5～60				
Removal particle size	μm	0.01				
Oil removal	mg/m^3	1.0(At inlet temperature 30℃)				
Initial operating pressure drop	MPa	0.01				
Nominal operating pressure drop	MPa	0.02～0.04				
Maximum permissible differential pressure	MPa	0.07				
Port size	FLG	6	6	8	8	8
Mass	kg	190	250	260	300	350
Differential pressure gauge		GA5102				
Parts No. of Automatic drain		5100-4C(Drain discharge port Rc$^1/_4$)				
Material	Body	Steel				
	Upper flange	Steel				

Note1. FLG is flange of 10K.

Note2. Permissible max. air flow is converted to atmospheric at 0.7MPa, at pressure drop of 0.01MPa.

1-2. External dimensions

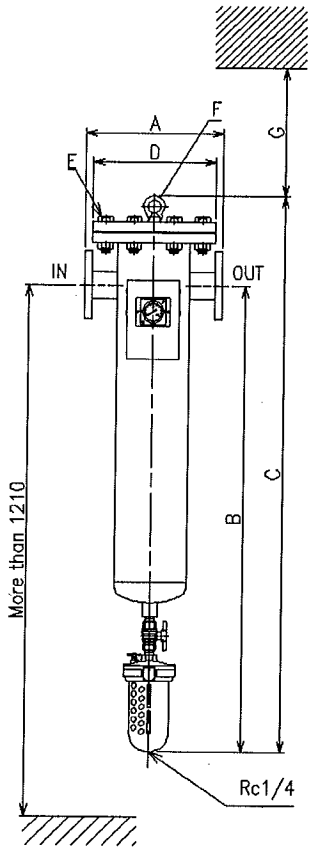

AF3016M-50

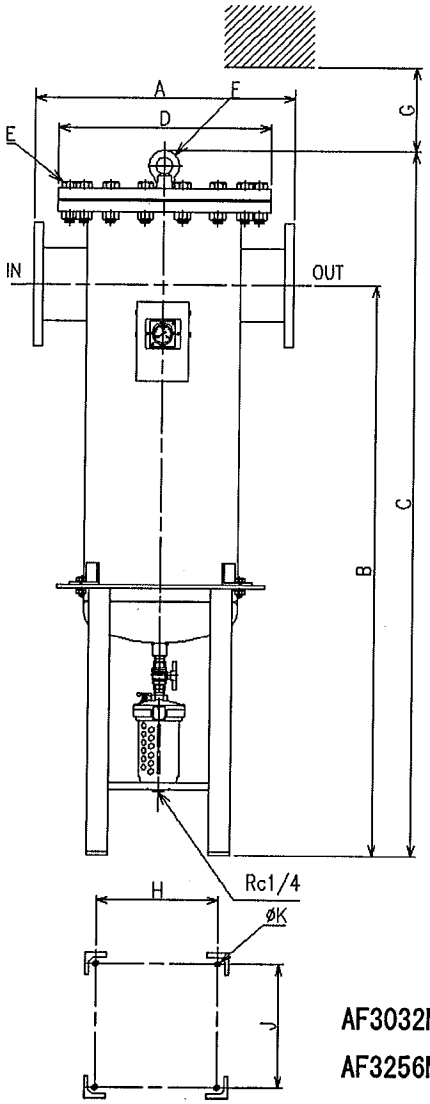

AF3032M-80 ~
AF3256M-200

	A	B	C	D	E	F	G	H	J	K	Port size
AF3016M-50	315	1062	1267	280	8-M20×70	M12	More than 600	—	—	—	FLG2"
AF3032M-80	500	1255	1495	400	12-M22×80	M12	More than 600	210	210	φ15	FLG3"
AF3048M-100	500	1255	1495	400	12-M22×80	M12	More than 600	210	210	φ15	FLG4"
AF3064M-100	550	1270	1522	445	16-M22×80	M16	More than 600	250	250	φ15	FLG4"
AF3080M-150	600	1300	1606	490	16-M22×80	M20	More than 600	280	280	φ15	FLG6"
AF3096M-150	650	1320	1630	560	16-M24×90	M20	More than 600	320	320	φ15	FLG6"
AF3128M-150	700	1350	1693	620	20-M24×90	M20	More than 600	350	350	φ15	FLG6"
AF3160M-200	700	1350	1693	620	20-M24×90	M20	More than 600	350	350	φ15	FLG8"
AF3192M-200	750	1360	1709	675	20-M24×100	M20	More than 600	400	400	φ15	FLG8"
AF3256M-200	850	1400	1786	745	20-M30×110	M24	More than 600	450	450	φ15	FLG8"

2. CAUTIONS

2-1. Formalities when installed Microalescer

Microalescer is classified "Pressure vessel" subject to "Safety Regulation of Pressure Vessel".

Safety Regulation of Pressure Vessel

As models AF3032M-AF3256M are applied as "Second Class Pressure Vessel" according to "Boiler and Pressure Vessel Safety Regulation" by legislation of Ministry of labor, they are accompanied by a certificate for withstanding pressure of the Second Class Pressure Vessel.

During use of this machine, keep this certificate in your possession.

2-2. Operational cautions

1) Air flow rate through Microalescer must not exceed processed air flow rate. Otherwise, oil in compressed air could not be removed.
2) When pressurizing Microalescer which is set-up in front or in the rear of valves, operate valve, etc. slowly enough so that index of differential pressure gauge may not exceed max value of scale. Rapid operation of valve may damage filter element and differential pressure gauge. In case that differential pressure gauge points over 0.07MPa during pressurizing, oil could not be removed by element.
3) When releasing pressure from piping, release it slowly at secondary side of Microalescer. If released at primary side, reverse flow may arise in Microalescer, resulting in damage of differential pressure gauge and element.
4) Do not use the dryer for pneumatic caisson shield or respiratory medical equipment.
   ※It could cause an accident includes injury.
5) Do not use the dryer for transportation devices such as automobile, ship etc.
   ※Vibration could be a cause of break down of the internal components.

3. OPERATION

3-1. Prior to opening air valve

Ensure the following check points after completion of installation Microalescer prior to opening air valve.

1) Whether differential pressure gauge and automatic drain are properly installed, particularly direction of flow.

2) Ensure that the air flow is within max. tolerable flow rate.

It indicates that the system is operable when no discrepancies is discovered.

4. INSTALLATION

4-1. Place of installation

1) Avoid its installation within the area where ambient temperature is expected to exceed 60℃.
2) Provide ample room around it for later service such as replacing element or dismounting bowl.
3) Avoid its installation within the area where such gases as follows are likely mixed in the ambient air because mantle may be eroded or swollen.
   - Sulforous acid gas
   - Clorate gas
   - Hidensity ozone
   - Arlmatic hydro carbons solvent
     (Examples; Benzene, Toluen, Phenol, Cyclohexane etc.)
   - Chlorinated aliphatic hydrocarbons
     (Examples; Trichloro ethylene, Chlorohorm etc.)
   - Keton (Example; Aceton)
   - Aldehyde (Examples; Holmaldehyde, Acetoaldehyde etc.)
   - Amin (Examples; Ethylamin, Methyl amin etc.)
4) Material of bowl of automatic drain is polycarbonate resin. Material of window of scale board of differential pressure gauge is nylon resin.
   Do not use this machine where the following chemical agents are contained in the compressed air or in atmosphere near automatic drain or differential pressure gauge.

Kind of chemicals	Classification of chemicals	Major products of each chemicals	Ordinal application
Inorganic compound	Acid	Hydrochloric acid·Sulfuric acid·Nitric acid·Fluoride acid·Phosphoric acid·Chromate acid, etc	Acid washing off metal parts, degreasing, oil film washing
	Alkali	Canstic soda·Canstic potassium·Hydrated lime·Ammonia solvent·Carbonate soda	Alkali washing off metal parts
	Inorganic hydrochlorine	Sulfide soda·Potassium nitrate·Chromic potassium·Sulfa soda	
Organic compound	Aromatic hydrocarbons	Benzene·Toluene·Xylene·Ethyl benzene·Styrene	Contained in the thinner of painting material (Benzene, toluene, xylene)
	Chlorinated aliphatic hydrocarbons	Methyl chloride · Ethylene chloride · Methylene chloride · Acetylene chloride · Chloroform · Trichloroethylene·Perchlene·Carbon tetrachloride	Washing rinse of organic solvent off metal components (Trichloro ethylene, perchlene, carbon tetrachloride)
	Chlorinated aromatic hydrocarbons	Chlorobenzene·Dichloro benzene·Benzene hexachloride	Farm chemicals
	Petroleum solvent	Solvent·Naphtha·Gasoline	
	Alcohol	Methyl alcohol·Ethyl alcohol·Cyclohexanol·Benzyl alcohol	Anti-freezer
	Phenol	Carbolic acid·Cresol·Naphthol	Disinfectant
	Ether	Methyl ether·Methyl-ethyl ether·Ethyl ether	Additive to brake fluid
	Ketones	Acetone·Methyl-ethyl keton·Cyclohexanone·Acetophenone	
	Carbonic acid	Formic acid·Acetic acid·Buthylene acid·Acrylic acid·Oxalic acid·Biphthalate acid	Dying ditargent. Oxalic acid as aluminum treatment compound. Biphthalate acid as basic compound of painting
	Phosphoric ester	Dimethyl phthalate (DMP)·Diethyl phthalate(DEP) ·Dibuthyl phethalate(DBP) ·Diothyl phethalate(DOP)	Additive to lubricant, synthetic hydraulic fluid, rust preventive oil and prasticizer to synthetic
	Oxy acid	Glycol acid·Lactic acid·Malic acid·Citrate acid·Tartaric acid	
	Nitro compound	Nitromethane·Nitro ethane·Nitro ethylene·Nitro benzene	
	Amin	Methyl amin·Diothyl amin·Ethyl amin·Aniline·Aceto anilido	Additive to brake fluid
	Nitril	Acetonitrile·Acrylonitrile·Benzenitrile·Acetoirinitril	Raw material of nitril rubber

4-2. Installation

1) Install the Main line filter on the leveled floor without no vibration.
2) Do not mount the Main line filter in front on in the rear abrupt open/close valve.
3) Install it so as to have arrow mark coincides with direction of flow.
   It may sometimes cause a damage of element when back pressure is charged to Microalescer.
4) Install it as perpendicular as possible having drain port downward.
5) Install it as far away from compressor as possible so as to have compressed air cools by natural radiation in piping before coming into filter.
6) Provide ample room for later service work such as more than 600mm a top of eyenut.
7) Keep primary side pressure within 1.0MPa.
8) Install base bolts utilizing bolt holes of mounting legs.
   Refer to 1-2 external dimensions for mounting pitch.

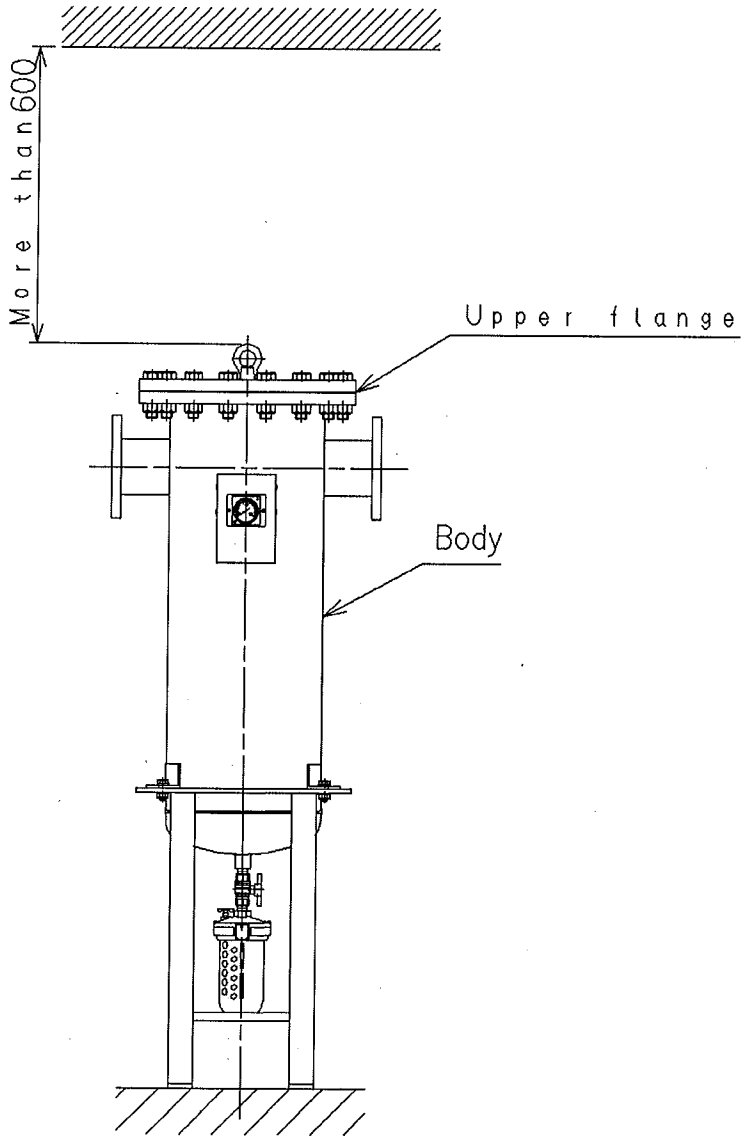

4-3. Piping

1) Use large enough pipe to reduce pressure drop and eliminate sharp bending of piping or using stop valve with large flow resistance.
2) It is recommended to use zinc coated pipes to prevent rusting.
3) Wash off cutting oil and/or rust preventive oil off the pipes and couplings. Flush secondary side piping with great care to remove all cutting oil and rust preventive oil thoroughly.
4) Microalescer is high performance oil separating air filter. But it is incapable to dehumidify air within the system. Install air dryer.
5) Separated oil of compressed air by Microalescer is automatically purged by automatic drain. Automatic drain, model 5100-4C, is delivered together with Microalescer but is not mounted on. Mount it on the Microalescer upon installation and piping Microalescer. Make use delivered couplings (Nipple and Stop valve).

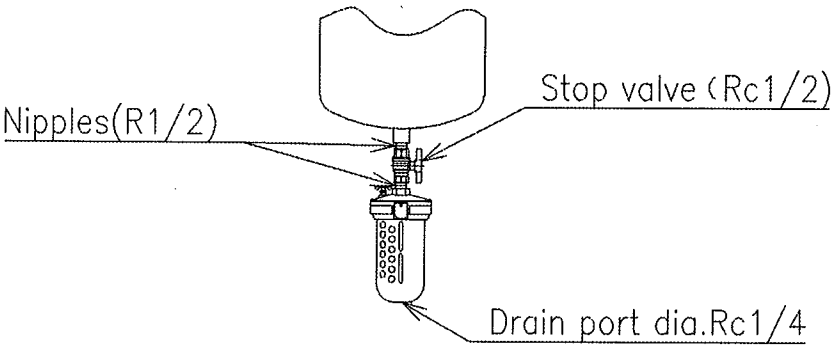

6) Comply with the following table to choose dia. and length of drain line tube.

Dia. of drain tube	Length of tube
ID 6mm or more	Within 5m

5. MAINTENANCE

5-1. Observation of differential pressure gauge

Pressure drop at Microalescer grows more and more as its operation is kept. It is due to the accumulation of captured carbon and dust particles. When gauge reading of pressure drop becomes 0.05MPa or lower, keep watching gauge at least once a week because Microalescer should be used within 0.07MPa of the pressure drop range.

5-2. Inspection of automatic drain

Separated oil element of Microalescer has to be purged out. Visually inspect occasionally to confirm its appropriate functioning. Disassemble and clean it or replace with a new drain unit.

5-3. Washing bowl

Use only neutral detergent for home use or kerosene to wash transparent bowl, avoiding to use any chemicals or detergent disservicing to the bowl.

5-4. Dismounting of bowl

(1) Shut off the stop valve, and relase air inside of the bowl from cock.

(2) Pushing the latch and turn the cramp ring by 15° to release the bowl.

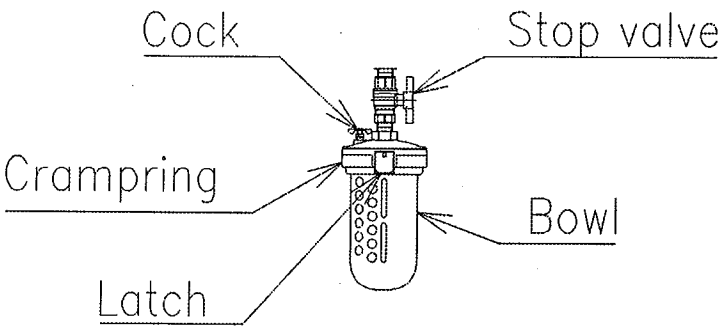

5-5. Timing of element replacement

It is due for element to be replaced when pressure drop falls out of range of 0.07MPa. It is hard to tell exactly as to when because it depends upon volume of foreign particles carried by air to prime side of element. Immediately replace it with new element whenever it is noticed that it falls out of 0.07MPa. Discard clogged element because it is not washable.

5-6. Replacement of element

1) Stop supplying compressed air and release pressure in filter.
   (When releasing pressure from filter body, use pet cock. Do not release pressure from primary side.)
2) Loosen flange fixing bolt.
3) Remove upper flange.
4) Loosen element ass'y by turning it counterclockwise.
   (As there is a hexagon hole in upper part, use allen wrench of 10mm.)
5) Pull out element ass'y slowly.
6) Loosen retaining nut and remove element.
7) Replace element. (Care must be taken that an O-ring is set each for end plate, element and retaining nut.)
8) Assemble them in the reverse steps.

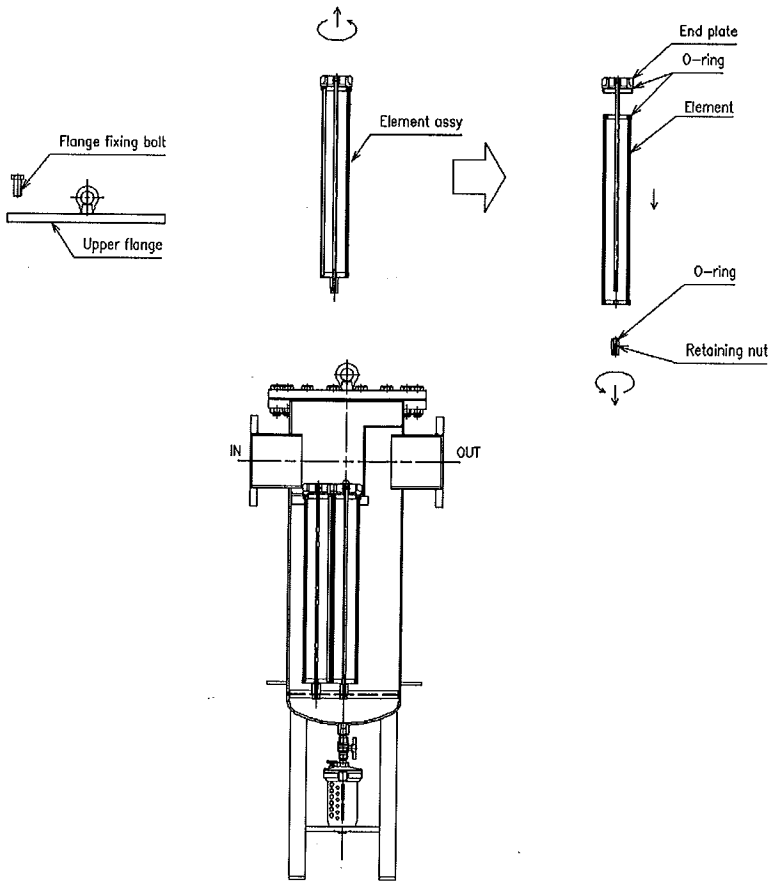

5-7. Expendable parts

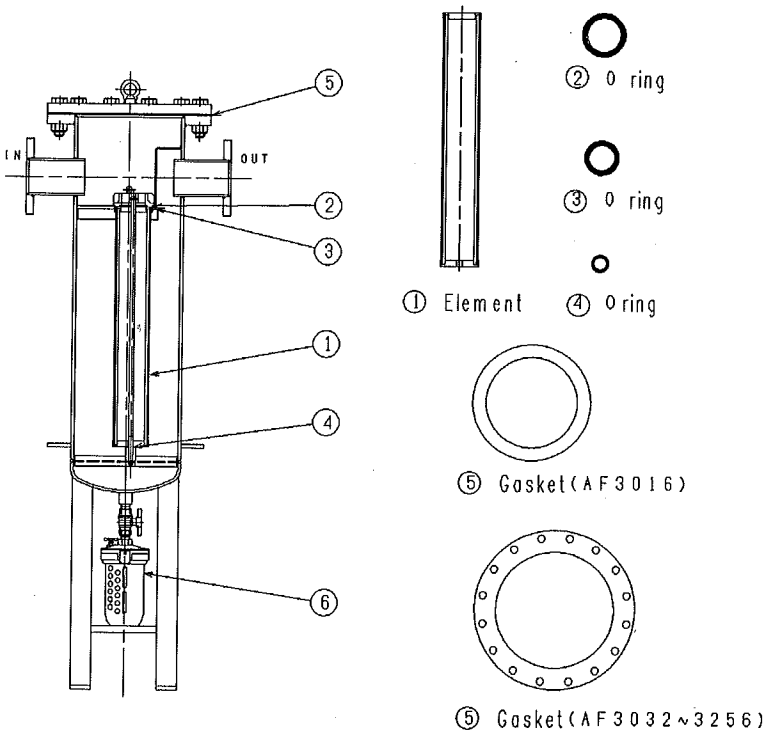

No.	Parts	Parts No.				
		AF3016M-50	AF3032M-80	AF3048M-100	AF3064M-100	AF3080M-150
	Q'ty of element	1	2	3	4	5
①	Element	AF3016M-ELEMENT-KIT	AF3032M-ELEMENT-KIT	AF3048M-ELEMENT-KIT	AF3064M-ELEMENT-KIT	AF3080M-ELEMENT-KIT
②	O ring					
③	O ring					
④	O ring					
⑤	Gasket	AF3016P-GASKET	AF3032P-GASKET	AF3048P-GASKET	AF3064P-GASKET	AF3080P-GASKET
⑥	Automatic drain	5100-4C				

No.	Parts	Parts No.				
		AF3096M-150	AF3128M-150	AF3160M-200	AF3192M-200	AF3256M-200
	Q'ty of element	6	8	10	12	16
①	Element	AF3096M-ELEMENT-KIT	AF3128M-ELEMENT-KIT	AF3160M-ELEMENT-KIT	AF3192M-ELEMENT-KIT	AF3256M-ELEMENT-KIT
②	O ring					
③	O ring					
④	O ring					
⑤	Gasket	AF3096P-GASKET	AF3128P-GASKET	AF3160P-GASKET	AF3192P-GASKET	AF3256P-GASKET
⑥	Automatic drain	5100-4C				

5-8. Replacement of differential pressure gauge

1) Stop the air supply and release air inside of the filter.

2) Remove the mounting screws of the differential pressure gauge.

3) Take out the differential pressure gauge carefully.

4) Take out piping tubes (high, low) from the body of D. P. gauge.

5) Replace it with new one. And connect piping tube (high, low) between D. P. gauge and filter.

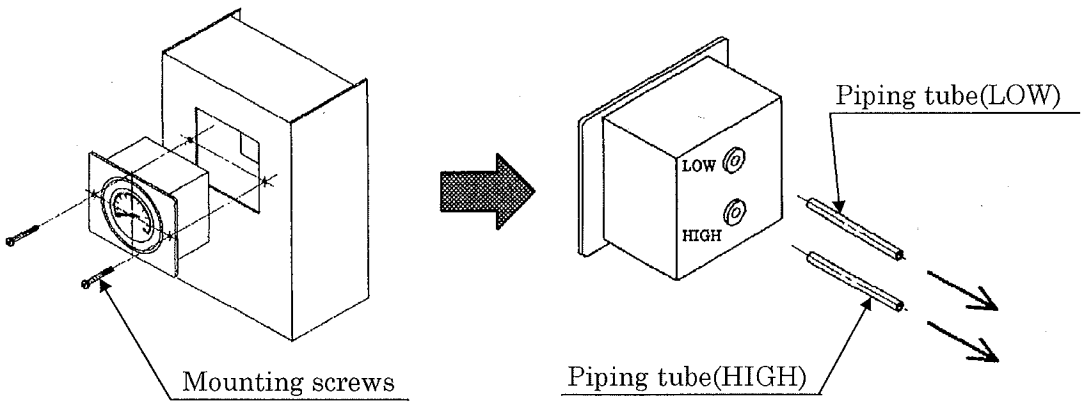

6. MODEL CODING

AF3016M-50-○

① ② ③

①Classification of air flow rate		② Diameter		③ Options	
016	16m³/min(ANR)	50	FLG2"	No mark	None
032	32m³/min(ANR)	80	FLG3"	X1	In-out is in opposite direction
048	48m³/min(ANR)	100	FLG4"		
064	64m³/min(ANR)				
080	80m³/min(ANR)	150	FLG6"		
096	96m³/min(ANR)				
128	128m³/min(ANR)				
160	160m³/min(ANR)	200	FLG8"		
192	192m³/min(ANR)				
256	256m³/min(ANR)				